RUTHZIL TRATOR COMERCIAL DE PEÇAS LTDA 11 97083-6812 ROLANDO CITRANGULO

JULHO 1976

W7E

CASE

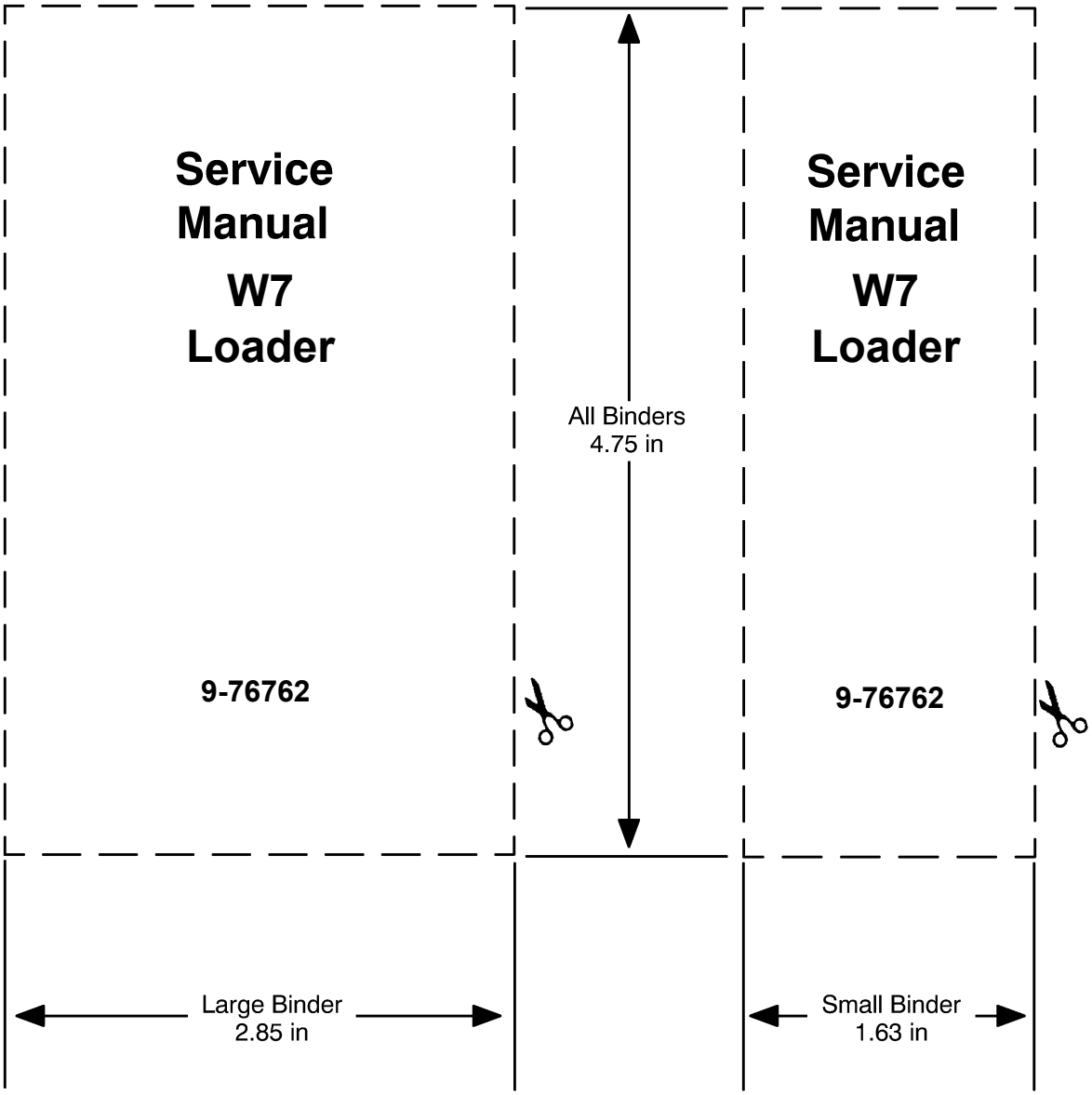

MODEL W-7 FOUR WHEEL DRIVE LOADER AND BACKHOE

TABLE OF CONTENTS

SERIES/SECTION	SECTION NO.	FORM NO.
10 SERIES - GENERAL		
Engine Specifications	C	9-74563
20 SERIES - ENGINE		
Cylinder Head, Diesel	K	9-76972
Cylinder Head, Gas	L	9-76962
Assemblies in Engine Block	M	9-75222
Front Mounted Oil Pump	M	9-78012
Engine Counter Balancer	MM	9-76731
Water Pump	3M	9-77461
Spark Ignition Governor	4M	9-76751
Governor Linkage		9-75711
30 SERIES - FUEL SYSTEM		
Fuel Injector, Diesel	I	9-75421
Carburetor, Gas	N	9-75771
40 SERIES - HYDRAULICS		
Hydraulic Cylinders	A	9-76621
Hydraulic Valves (2 Spool)	D	9-74562
Hydraulic Valves (3 Spool)	DD	9-74561
Hydraulic Pump	J	9-74561
50 SERIES - STEERING		
Power Steering	G	9-74561
Power Steering Pump	PP	9-74561
60 SERIES - POWER TRAIN		
Torque Converter	X	9-74562
Transmission	Y	9-74562
Differential	T	9-74561
Differential	T, Sup. 1	9-74561
Planetaries and Axles	U	9-74561
Supplement 1	U	9-74561
70 SERIES - BRAKES		
Brake Cylinder, Shoes and Drum	W	9-74562
Transmission Cut-Out Valve	W, Sup. 1	9-74561
Transmission Cut-Out Valve (Lever Operated)	W, Sup. 2	9-74562
Hydrovac Brake System	3W	9-74562
80 SERIES - ELECTRICAL SYSTEM		
Electrical System, Alternator	FF	9-76331
Electrical System, Starting	3F	9-76721
Wiring Diagram		9-76631

Reprinted

CASE CORPORATION

Burl. Form 9-76761 July 1976

PRINTED IN U.S.A.

SERIES/SECTION	SECTION NO.	FORM NO.
80 SERIES - ELECTRICAL SYSTEM (CONT'D)		
Wiring Diagram		9-76641
Wiring Diagram		9-76651
Wiring Diagram		9-76661
90 SERIES - MOUNTED EQUIPMENT		
Model 32 Backhoe	3D	9-75091
Model 33 and 34 Backhoe	3D	9-72821

SECTION

C

SPECIFICATIONS FOR CASE

W7 - A284 GASOLINE ENGINE

W7 - A301 DIESEL ENGINE

W9 - A251 GASOLINE ENGINE

W9 - A267 DIESEL ENGINE

W9A - A284 GASOLINE ENGINE

W9A - A301 DIESEL ENGINE

The Specifications Listed are The Same Unless Otherwise Indicated

Rac. Form 9-74563

PRINTED IN U.S.A.

C-2

A267 AND A301 ENGINE SPECIFICATIONS

Type ---------- CASE Full Diesel, 4 Cylinder 4 Stroke Cycle Valve-in-Head Engine.

Cylinder Heads---------- Multiple Cylinder Heads can be removed individually for Servicing (2 cylinders per head).

Firing Order ----------1-3-4-2

Bore
A267 ---------- 4-1/8 Inches
A301 ---------- 4-3/8 Inches

Stroke---------- 5 Inches

Piston Displacement
A267 ---------- 267 Cubic Inches
A301 ---------- 301 Cubic Inches

Compression Ratio ---------- 15 to 1

Oil Filter, Crankcase---------- Replaceable Full Flow Element Type.

Method of Starting Diesel Engine -------- Engine Starts on Diesel Fuel (Electric Starting Motor).

Maximum Compression Pressures

ENGINE WARMED UP TO OPERATING TEMP. AND RUNNING AT 1600 RPM

Altitude	Sea Level	1000 ft.	2000 ft.	3000 ft.	4000 ft.	5000 ft.
Compression Pressure	480 to 510 PSI	455 to 485 PSI	435 to 465 PSI	415 to 445 PSI	395 to 425 PSI	375 to 405 PSI

Allowable Variance Between Cylinders - 25 Pounds Pressure at 1600 RPM

CYLINDER SLEEVES

Type ---------- Replaceable Wet Type:Two Rubber O-Ring Seals carried on each sleeve.

Inside Diameter of Sleeve Bore
A267----------4.125 to 4.126 Inches. Replace Sleeve when inside Diameter below Top Ring Ridge Exceeds 4.133 Inches.
A301---------- 4.375 to 4.376 Inches. Replace Sleeve When Inside Diameter Below Top Ring Ridge Exceeds 4.333 Inches.

Piston Clearance in Sleeve (At Skirt)
A267 ---------- .0045 to .0055 Inch
A301 ---------- .0045 to .0065 Inch

Cylinder Sleeve Out-of-Round ---------- Max. .002 Inch

PISTON AND PISTON PINS

Piston Material
A267 ---------- Special Alloy Iron;Parco-Lubrized
A301 ---------- Aluminum

Piston Weight (Less Pin)
A267----------4.742 to 4.758 Pounds
A301 ---------- 3.937 to 3.939 Pounds

Diameter of Piston at Top of Skirt (Below Oil Ring)
A267 ---------- 4.106 to 4.109 Inches
A301 ---------- 4.341 to 4.345 Inches

Diameter of Piston at Bottom of Skirt
A267 ---------- 4.1205 to 4.1215 Inches
A301 ---------- 4.3675 to 4.3685 Inches

Piston Pins---------- Full Floating Type:Held in Position with Snap Rings in Piston. Replaceable Bronze Bushing in Connecting Rod.

Piston Pin Length
A267 ----------3.395 to 3.405 Inches
A301----------3.670 to 3.675 Inches

Piston Pin Diameter
A267 ----------1.3583 to 1.3586 Inches
A301 ---------- 1.4994 to 1.4995 Inches

Piston Pin Fit in Piston
A267 ---------- .0003 to .0008 Inch. When Pin is lubricated with Light Engine Oil and held upright in Vise, Weight of Piston should allow it to slide slide slowly into position over Pin.
A301 ---------- .0000 to .0003 Inch With Piston 50°F Warmer Than Pin.

Piston Pin Fit in Connecting Rod Bushing
A267 ----------.0004 to .0011 Inch
A301----------.0005 to .0010 Inch

PISTON RINGS

Rings Per Piston ---------- 4- (3 Compression and 1 Oil) .

Compression Rings
Width of Ring (All 3) ---------- .0930 to .0935 Inch

Ring End Gap(All 3)when Compressed in . 4.125 Inch Cylinder A267---------- .013 to .023 Inch
Ring End Gap (All 3) when Compressed in 4.375 Inch Cylinder A301 ---------- .013 to .025 Inch

Side Clearance in Groove of 1st(Top) Ring
A267----------.003 to .0045 Inch
A301 ----------.0045 to .0060 Inch

Side Clearance in Groove of 2nd and 3rd Ring----.0025 to .004 Inch

Oil Ring----------To install Replacement Ring, Follow Instructions Packed with Rings.

Width of Rings (Original Equipment)
A267 ---------- .2455 to .2485 Inch
A301---------- .2470 to .2490 Inch

Replacement Ring----------.2441 to .2474 Inch

Side Clearance in Groove(Original Equipment)
A267----------.0025 to .0065 Inch
A301----------.0025 to .0085 Inch

Replacement Ring
A267 ----------.0015 to .003 Inch
A301 ---------- .0025 to .0085 Inch

CONNECTING RODS

Connecting Rod Bushing ----------Replaceable Bronze Bushing Replacement Bushing must be Reamed.
A267 ---------- Use 1.3590 to 1.3594 Reamer
A301 ---------- Use 1.5000 to 1.5004 Reamer

Piston Pin Hole Diameter in Rod (Without Bushing)
A267---------- 1.483 to 1.485 Inches
A301 ---------- 1.686 to 1.688 Inches

Inside Diameter of Piston Pin Bushing in Rod
A267----------1.3590 to 1.3594 Inches: Install New Bushing if inside Diameter Exceeds 1.363 Inches.
A301---------- 1.500 to 1.5004 Inches; Install New Bushing if inside Diameter Exceeds 1.504 Inches.

Connecting Rod Bearing---------- Replaceable, Precision, Steel Backed Copper Lead Alloy Liners.

Connecting Rod Capscrews -------- Self Locking Type, No Lock Wires Required - May Be used More Than Once.

Connecting Rod Length (Center to Center Between Pin Hole and Bearing Journal Hole)-----10.499 to 10.501 Inches

Bearing Liner Width ----------1.625 Inches

Diameter of Crankshaft Journal Hole in Rod(Without Liner) ---------- 2.9005 to 2.9010 Inches

Inside Diameter of Bearing Liner(Standard Liner in Place in Rod and Capscrews Tight)----- 2.7503 to 2.7518 Inches

Diameter of Crankshaft Rod Journal----------2.748 to 2.749 Inches

Clearance Between Rod Bearing and Crankshaft Journal ----------.0013 to .0038 Inch; Install New Bearing Liners When Clearance Exceeds .006 Inch

Undersize Bearing Liners Availiable for Service ---------- .002,.010,.020,.030 Inch

Allowable Connecting Rod Bearing End Play ----------.005 to .012 Inch

CRANKSHAFT AND MAIN BEARINGS

Crankshaft ----------Balanced; Drilled to Provide Pressure Lubrication to Main and Connecting Rod Bearings.

Type Main Bearings----------Replaceable, Precision, Steel Backed Copper - Lead Alloy Liners.

Bearing Capscrews ---------- Self Locking Type, No Lock Wires Required - May Be Used More Than Once.

Bearing Taking End Thrust ---------- Center(Two Replaceable Bronze Thrust Washers).

Crankshaft End Play(Measured at Center Main Bearing) ---------- .004 to .012 Inch; Install New Thrust Washers if End Play Exceeds .020 Inch.

Oversize Thrust Washers for End Play Available for Service---------- .006 Inch

Connecting Rod Bearing Journal Diameter ------- 2.748 to 2.749 Inches

Main Bearing Journal Diameter ---------- 2.998 to 2.999 Inches

Crankshaft Main and Connecting Rod Journal Bearings out of Round ---------- Maximum .001 Inch

Maximum Allowable Taper on Crankshaft Rod Journal ---------- .002 Inch

Inside Diameter of Main Bearing Liners (In Place and Capscrews Tight) ----------3.0006 to 3.0026 Inches

Clearance Between Main Bearing Liner and Journal---------- .0016 to .0046 Inch;Install New Bearing Liner when Clearance Exceeds. .0065 Inches.

Width of 1st, 3rd, 5th Main Bearing Liners ----------2.218 Inches

Width of 2nd, 4th Bearing Liners ---------- 1.156 Inches

Width Between Crankshaft Main Bearing Cheeks

A.5th ---------- 2.620 to 2.630 Inches

B.2nd and 4th ---------- 1.5575 to 1.5675 Inches

C.3rd(Center)---------- 2.624 to 2.626 Inches

Width Between Crankshaft Rod Bearing Journal Cheeks----------1.9975 to 2.0025 Inches

Undersize Main Bearing Liners Available for Service ---------- .002,.010,.020,.030 Inch

Crankshaft Main Bearing Journals Should Be
2.988-2.989 Inches for .010 Inch Undersize Bearing
2.978-2.979 Inches for .020 Inch Undersize Bearing
2.968-2.969 Inches for .030 Inch Undersize Bearing

Undersize Connecting Rod Bearing Shells Available for Service ---------- .002,.010.,020,.030 Inch

Connecting Rod Crankshaft Journals Should Be Ground to------- 2.738-2.739 Inches for .010 Inch Undersize Bearing
2.728-2.729 Inches for .020 Inch Undersize Bearing
2.718-2.719 Inches for .030 Inch Undersize Bearing

CAMSHAFT AND BUSHINGS

Number of Bearing Surfaces on Camshaft ---------- 4

Type Bushing ---------- Replaceable, Precision, Steel Backed Babbitt

Bushing Lubrication ------- Pressure Lubricated from Oil Pump; Camshaft Drilled to Provide Pressure Lubrication to Valve Rocker Arm Assembly, and to Timing Gear Train.

Diameter of Camshaft at Each Bearing Surface-----2.246 to 2.247 Inches

Inside Diameter of Each Bushing (Measured when in Place in Block)---------- 2.2484 to 2.2514 Inches

No.1(Front)Bushing Length ---------- 1.656 Inches

No.2 and 3 Bushing Lengths ----------1.438 Inches

No.4 Bushing Length(w/cup type Camshaft plug) ----------1.156 Inches

Camshaft End Play ---------- Automatically Taken Up by Spring Loaded Thrust Button in Front End of Camshaft. Camshaft Washer Provided Between Drive Gear and Front Bearing.

Camshaft Washer

Outside Diameter ---------- 3.240 to 3.260 Inches

Inside Diameter---------- 2.250 to 2.260 Inches

Thickness----------.1225 to .1275 Inch

VALVE PUSH ROD LIFTERS

Type ----------Mushroom

Outside Diameter of End that Projects into Block--.8097 to .8102 Inches

Diameter of Bore in Block for Lifter---------- .8115 to .8130 Inch

Oversize Lifter Available for Service -------- .010 In. Oversize Lifter

Bore in Block Must Be Reamed to----- .8215 to .8225 Inch for.010 Inch Oversize Lifter.

VALVES

Valve Tappet Clearance

Intake and Exhaust----------.025 Inch, Engine Cold

Exhaust Valves

Angle of Valve Face---------- 44 Degrees

Valve Length
A267 ---------- 6.238 Inches
A301 ---------- 6.382 Inches

Maximum Valve Face Runout ------ .002 Inch as Determined with a Dial Indicator.

Diameter of Valve Stem --- .4000 to .401 Inch. Install New Valve if there is more than.002 Inch Difference in Diameter at any Point on Stem.

Diameter of Valve Head
A267---------- 1.484 Inches
A301 ---------- 1.562 Inches

Inside Diameter of Valve Guide-----.4045 to .4055 Inch(After Assembly).

Valve Stem Clearance in Guide ---------- .0035 to .0055 Inch

Exhaust Valve Seat Insert

Seat Angle ---------- 45 Degrees

Seat Contact Width ----------.073 to .084 Inch

Outside Diameter of Insert
A267 ---------- 1.640 to 1.641 Inches
A301 ---------- 1.722 to 1.723 Inches

Inside Diameter of Insert
A267 ---------- 1.323 to 1.333 Inches
A301 ----------1.401 to 1.411 Inches

Maximum Allowable Seat Runout ---------- .002 Inch as Determined with a Dial Indicator.

Intake Valves

Angle of Valve Face---------- 44 Degrees

Valve Length
A267 ---------- 7.243 Inches
A301 ---------- 7.368 Inches

Maximum Valve Face Runout---------- .002 Inch as Determined with a Dial Indicator.

Diameter of Valve Stem ---------- .402 to .403 Inch Install New Valve if there is More than.002 Inch Difference in Diameter at any Point on Stem.

Diameter of Valve Head
A267 ---------- 1.731 Inches
A301 ----------1.825 Inches

Inside Diameter of Valve Guide --- .4045 to .4055 Inch.(After Assembly)

Stem Clearance in Guide ---------- .0015 to .0035 Inch

Intake Valve Seat

Seat Angle---------- 45 Degrees

Seat Contact Width ---------- .086 to .096 Inch

Maximum Allowable
Seat Runout---------- .002 Inch as Determined with a Dial Indicator

Exhaust Valve Guides

Length ---------- 3.218 Inches

Outside Diameter---------- .7510 to .7515 Inch

Inside Diameter ---------- .4045 to .4055 Inch.(After Assembly)

Valve Stem Clearance in Guide ---------- .0035 to .0055 Inch

Distance Above Head Guide Must Protrude ------ 1.062 Inches,Press Fit

Intake Valve Guides

Length ---------- 4.375 Inches

Outise Diameter ---------- .7510 to .7515 Inch

Inside Diameter ---------- .4045 to .4055 Inch(After Assembly)

Valve Stem Clearance in Guide ---------- .0015 to .0035 Inch

Distance Above Head
Guide Must Protrude ----------1.062 Inches, Press Fit

VALVE SPRINGS

Free Length ---------- Approximately 2.438 Inches

Spring Pressure at Compressed Height of
1.484 Inches(Valve Open)---------- 102 Pounds; Install New Spring if Pressure is Less than 92 Pounds.

Spring Pressure at Compressed Height of
1.937 Inches(Valve Closed)---------- 45 Pounds; Install New Spring if Pressure is Less than 41 Pounds.

ROCKER ARM ASSEMBLY

Rocker Arm Bushing --------- Replaceable Precision Bronze Bushing

Number of Bushings ---------- 8

Lubrication---------- Pressure Lubricated; Crankcase Oil to Rocker Arms Metered by Camshaft.

Oil Holes in Rocker Arm Shaft ------- Oil Holes must Face Push Rod Side of Engine Only. Shaft Cannot Be Rotated.

Positioning of Exhaust
Valve Rocker Arms---------- Spacer Washers Position Exhaust Valve Rocker Arm and Eliminate End Play without Binding.

Outside Diameter of
Rocker Arm Shaft---------- .872 to .873 Inch

Inside Diameter of Rocker
Arm Bushing (Installed)---------- .8745 to .8755 Inch

Rocker Arm Shaft Spring

Spring Pressure at Compressed Height of
1.562 Inches ---------- 10 Pounds; Install New Spring If Pressure is Less than 8.5 Pounds

OIL PUMP

Type ---------- Positive Displacement, Gear Type Pump; Driven Off Balancer.

Pressure Relief Valve---------- Maintains 40 to 45 Pounds Full Pressure(Oil Warm,Engine Operating at Full Governed Speed) Relief Valve is Adjustable.

WATER PUMP AND THERMOSTAT

Type of System ----------Pressurized Thermostat - Continuous By-Pass Type; Forced Circulation (Pump).

Type Pump ----------Impeller Vane Type

Radiator---------- Heavy Duty Fin and Tube Type

Temperature Control ---------- By Pass Type Thermostat

FUEL SYSTEM

Injection Pump ------- Robert Bosch,Type PES Multiple Plunger Pump

Direction of Pump Rotation----------Counter-Clockwise

Pump Mounting---------- Right Hand Side of Engine

Pump Drive-------- Gear Driven from Camshaft Gear at Camshaft Speed

Injection Pump Drive Lubrication-------- Pressure Lubricated From Front Camshaft Bearing.

Injection Pump Drive Shaft Diameter --------- 1.3700 to 1.3705 Inches

Normal Clearance Between
Drive Shaft and Bushings ---------- .001 to .002 Inch

Number of Drive
Shaft Bushings ---------- 2- These Bushings are Not Replaceable. A Replacement Drive Housing with Bushings in Place, Aligned and Fine Bored is Provided.

Injection Pump Drive
Shaft End Play---------- Automatically Take Up By a Spring Loaded Thrust Button on Front End of Drive Shaft.
Thrust Washers Provided Between Front Drive Gear and Drive Shaft Housing.

Thrust Washer

Outside Diameter ---------- 2.085 to 2.105 Inches

Inside Diameter---------- 1.3725 to 1.3825 Inches

Thickness ----------.1225 to .1275 Inch

Timing Marks on Engine ------- Timing Marks Located on Crankshaft Pulley Flange (0 through 5 and 20 through 35 Degrees Before Top Dead Center). Pointer Located on Timing Gear Cover.

Fuel Injectors ---------- Robert Bosch Pintle Type;Opening Pressure 1950 to 2100 Pounds Per Square Inch.

Governor --------- Mechanical Variable Speed Fly-Weight Centrifugal Type; Integral Part of Injection Pump.

Fuel Filters

Fuel Tank Breather---------- Fuel Tank Cap

Fuel Tank Water Trap ---------- Located in Base of Fuel Tank

1st Stage Fuel Filter ---------- Replaceable Element Type

2nd Stage Fuel Filter ---------- Replaceable Element Type

Final Fuel Filter---------- Replaceable Sealed"Can" Type Filter.

A251 AND A284 ENGINE SPECIFICATIONS
Gasoline and LP Gas

Type ---------- CASE 4 Cylinder, 4 Stroke Cycle, Valve-In-Head Engine.

Cylinder Heads---------- Multiple Cylinder Heads can be removed individually for Servicing (2 Cylinders per Head).

Firing Order ---------- 1-3-4-2

Bore
A251 ---------- 4 Inches
A284 ----------4-1/4 Inches

Stroke---------- 5 Inches

Piston Displacement
A251----------251 Cubic Inches
A284 ---------- 284 Cubic Inches

Compression Ratio
A251(Gasoline)---------- 7.4 to 1
(LP Gas)---------- 8.5 to 1
A284(Gasoline) ---------- 7.4 to 1
(LP Gas) ---------- 8.5 to 1

Maximum Compression at Cranking Speed (150 RPM)
Engine Warmed up to Operating Temperature ---- 140 PSI at Sea Level

Allowable Variance Between Cylinders---------- 15 Pounds Pressure

Oil Filter, Crankcase----------Replaceable Full Flow Element Type

Ignition---------- Distributor

CYLINDER SLEEVES

Type ---------- Replaceable Wet Type; Two Rubber O-ring Seals Carried on each sleeve.

Inside Diameter of Sleeve Bore
A251---------- 4.00 to 4.001 Inches, Replace Sleeve when Inside Diameter Below Top Ring Ridge Exceeds 4.008 Inches.
A284 ---------- 4.250 to 4.251 Inches. Replace Sleeve When Inside Diameter Below Top Ring Ridge Exceeds 4.258.

Piston Clearance in Sleeve (At Skirt)---------- .0035 to .0045 Inches

PISTON AND PISTON PINS

Piston Material---------- Aluminum

Piston Weight (Less Pin)
A251---------- 2.205 to 2.214 Pounds
A284 ---------- 2.788 Pounds

Diameter of Piston at Top
A251----------3.964 to 3.968 Inches
A284 ---------- 4.215 to 4.219 Inches

Diameter of Piston at Top of Skirt (Measured Immediately Below Oil Ring, Across thrust Faces)
A251 ----------3.996 to 3.997 Inches
A284 ---------- 4.246 to 4.247 Inches

Piston Pins---------- Full Floating Type; Held in Position with Snap Rings in Piston; Replaceable Bronze Bushing in Connecting Rods.

Piston Pin Length
A251 ---------- 3.395 to 3.405 Inches
A284 ---------- 3.613 to 3.618 Inches

Piston Pin Diameter
A251 ---------- 1.3583 to 1.3586 Inches
A284 ---------- 1.3584 to 1.3585 Inches

Piston Pin Fit in Piston
A251 ---------- .0001 to .0003 Inch
A284 ---------- .0001 to .0004 Inch

Piston Pin Fit in Connecting Rod Bushing
A251 ---------- .0004 to .0011 Inch
A284 ---------- .0005 to .0011 Inch

PISTON RINGS

Rings Per Piston---------- 4 - (3 Compression and 1 Oil)

Compression Rings (Top 3)

1st(Top)Ring---------- Chromium Plated; Relief Indicates Top Side

2nd and 3rd Rings---------- Tapered Face, Top Marked

Width of Rings (All 3)----------.0930 to .0935 Inch

Ring End Gap(All 3) When Compressed in 4.000 Inch Cylinder
A251 ---------- .013 to .023 Inch
Ring End Gap (All 3) When Compressed in 4.250 Inch Cylinder
A284 ---------- .013 to .025 Inch

Side Clearance in Groove of 1st(top)Ring-------.0025 to .0040 Inch

Side Clearance in Groove of 2nd and 3rd Ring
A251 ----------.0020 to .0040 Inch
A284 ---------- .0020 to .0035 Inch

Oil Ring---------- To install Replacement Ring, Follow Instructions Packed with Rings.

Width of Ring(Both Original and Replacement)
A251 ---------- .2485 to .2490 Inch
A284 ---------- .2480 to .2590 Inch

Ring End Gap When Compressed in 4.00 Inch Cylinder
A251 ---------- .002 to .0035
Ring End Gap When Compressed in 4.250 Inch Cylinder
A284 ---------- .015 to .055

Side Clearance in Groove (Original Equipment) ---- .0015 to .0085 Inch
(Replacement Ring)------.0031 to .0074 Inch

CONNECTING RODS

Piston Pin Bushing ---------- Replacement Bronze Bushing, Ream in place. Use 1.3590 to 1.3594 Reamer.

Piston Pin Hole Diameter in Rod(Without Bushing) ---------- 1.483 to 1.485 Inches

Inside Diameter of Piston Pin Bushing in Rod----------1.3590 to 1.3594 Inches; Install New Bushing if Inside Diameter Exceeds 1.363.

Connecting Rod Bearing---------- Replaceable, Precision Steel Backed, Copper Lead Alloy Liners.

Connecting Rod Capscrews ---------- Self Locking Type, No Lock Wire Required-May be Used More Than Once.

Connecting Rod Length(Center to Center Between Pin Hole and Bearing Journal Hole ----------10.499 to 10.501 Inches

Bearing Liner Width ----------1.625 Inch

Diameter of Crankshaft Journal Hole in Rod(Without Liner)----------2.9005 to 2.9010 Inches

Inside Diameter of Bearing Liner(Standard Liner in Place in Rod and Capscrews Tight)----2.7503 to 2.7518 Inches

Diameter of Crankshaft Rod Journal---------- 2.748 to 2.749 Inches

Clearance Between Rod Bearing and Crankshaft Journal -------- .0015 to .0036 Inch; Install New Bearing Liners When Clearance Exceeds .006 Inch.

Undersize Bearing Liners Available for Service---------- .002, .010, .020, .030 Inch

Allowable Connecting Rod Bearing End Play ---------- .005 to .012 Inch

CRANKSHAFT AND MAIN BEARINGS

Crankshaft ---------- Balanced Drilled to Provide Pressure Lubrication to Main and Connecting Rod Bearings.

Type Main Bearings---------- Replaceable Precision, Steel Backed, Copper Lead Alloy Liners

Bearing Capscrews---------- Self Locking Type, No Lock Wires Required - May Be Used More Than Once

Bearing Taking End Thrust--- Center(Two Replaceable Bronze Thrust Washers).

Crankshaft End Play (Measured At Center Main Bearing) ---------- .004 to .012 Inch;Install New Thrust Washers if End Play Exceeds.020 Inch

Oversize Thrust Washers for End Play Available for Service---------- .006 Inch

Connecting Rod Bearing Journal Diameter ------- 2.748 to 2.749 Inches

Main Bearing Journal Diameter ---------- 2.998 to 2.999 Inches

Crankshaft Main and Connecting Rod Journal Bearing Out of Round ----------Maximum .001 Inch

Inside Diameter of Main Bearing Liners (In Place and Capscrews Tight)---------- 3.0006 to 3.0026 Inches

Clearance Between Main Bearing Liner and Journal---------- .0020 to .0046 Inch:Install New Bearing Liner when Clearance Exceeds .0065 Inches.

Width of 1st,3rd and 5th Main Bearing Liners ---------- 2.218 Inches

Width of 2nd and 4th Main Bearing Liners ----------1.156 Inches

Width Between Crankshaft Main Bearing Cheeks:

A.5th ---------- 2.620 to 2.630 Inches

B.2nd and 4th ---------- 1.5575 to 1.5675 Inches

C. 3rd (Center)---------- 2.624 to 2.626 Inches

Width Between Crankshaft Rod Bearing Journal Cheeks----------1.9975 to 2.0025 Inches

Undersize Main Bearing Liners Available for Service---------- .002, .010,.020,.030 Inch

Crankshaft Main Bearing Journals should be ground to------- 2.988-2.989 Inches for .010 Inch Undersize Bearing
2.978-2.979 Inches for .020 Inch Undersize Bearing
2.968-2.969 Inches for .030 Inch Undersize Bearing

Undersize Connecting Rod Bearing Shells Available for Service---------- .002,.010,.020,.030 Inch

Connecting Rod Crankshaft Journals Should be ground to--------- 2.738-2.739 Inches for .010 Inch Undersize Bearing
2.728-2.729 Inches for .020 Inch Undersize Bearing
2.718-2.719 Inches for .030 Inch Undersize Bearing

CAMSHAFT AND BUSHINGS

Number of Bearing Surfaces on Camshaft ----------4

Type Bushing ---------- Replaceable,Precision, Steel Backed Babbitt

Bushing Lubrication ----Pressure Lubricated from Oil Pump: Camshaft Drilled to Provide Pressure Lubrication to Valve Rocker Arm Assembly, and to Timing Gear Train.

Diameter of Camshaft at Each Bearing Surface ---------- 2.246 to 2.247 Inches

Inside Diameter of Each Bushing (Measured when in Place in Block) ---------- 2.2484 to 2.2514 Inches

No.1(Front)Bushing Length ---------- 1.656 Inches

No.2., and 3 Bushing Lengths ---------- 1.438 Inches

No.4 Bushing Length ---------- 1.156 Inches

Camshaft End Play--------- Automatically Taken up by Spring Loaded Thrust Button in Front End of Camshaft.Bronze Washer Provided Between Drive Gear and Front Bearing.

Camshaft Washer

Outside Diameter ----------3.240 to 3.260 Inches

Inside Diameter---------- 2.250 to 2.260 Inches

Thickness---------- .1225 to .1275 Inch

VALVE PUSH ROD LIFTERS

Type ---------- Mushroom Type

Outside Diameter of End That Projects into Block ---------- .8097 to .8102 Inches

Diameter of Bore in Block for Lifter ---------- .8115 to .8130 Inches

Oversize Lifter Available for Service -------- .010 Inch Oversize Lifter

Bore in Block Must be Reamed to ---------- .8215 to .8225 Inch for .010 Inch Oversize Lifter.

VALVES

Valve Tappet Clearance

Intake ----------,015 Inch, Engine Cold
Exhaust ---------- .025 Inch, Engine Cold

Exhaust Valves

Angle of Valve Face----------44 Degrees

Valve Length
A251 ----------6.537 Inches
A284 ---------- 6.604 Inches

Maximum Valve Face Runout ----------.002 Inch as Determined with a Dial Indicator.

Diameter of Valve Stem --------.400 to .401 Inch; Install New Valve if there is More Than .002 Inch Difference in Diameter at any Point on Stem.

Diameter of Valve Head
A251 ---------- 1.545 Inches
A284 ---------- 1.676 Inches

Inside Diameter of Valve Guide---------- .4045 to .4055 Inch

Valve Stem Clearance in Guide---------- .0035 to .0055 Inch

Valve Rotators ----------Positive Type

Exhaust Valve Seat Insert

Seat Angle ---------- 45 Degrees

Seat Width ---------- .073 to .084

Insert Height ---------- .250 to .255 Inch

Outside Diameter of Insert
A251 ----------1.630 to 1.631 Inches
A284 ---------- 1.761 to 1.762 Inches

Inside Diameter of Insert
A251 ---------- 1.370 to 1.380 Inches
A284 ---------- 1.501 to 1.511 Inches

Maximum Allowable Seat Runout ---------- .002 Inch as Determined with a Dial Indicator.

Intake Valves

Angle of Valve Face---------- 44 Degrees

Valve Length
A251 ---------- 6.695 Inches
A284 ---------- 6.593 Inches

Maximum Valve Face Runout ----------.002 Inch as Determined With a Dial Indicator.

Diameter of Valve Stem ---------- .402 to .403 Inch:Install New Valve if there is More than.002 Inch Difference in Diameter at any Point on Stem.

Diameter of Valve Head
A251 ---------- 1.720 Inches
A284 ---------- 1.825 Inches

Inside Diameter of Valve Guide --- .4045 to .4055 Inch(After Assembly)

Stem Clearance in Guide ---------- .0015 to .0035 Inch

Intake Valve Seat

Seat Angle ---------- 45 Degrees

Seat Width ----------.070 to .086 Inch

Exhaust Valve Guides

Length ---------- 3.625 Inches

Outside Diameter ----------.7510 to .7515 Inch

Inside Diameter ----------.4045 to .4055 Inch

Valve Stem Clearance in Guide---------- .0035 to .0055 Inch

Distance Above Head Guide Must Protrude ------- 1.062 Inch Press Fit

Intake Valve Guides

Length ---------- 3.625 Inches

Outside Diameter ---------- .7510 to .7515 Inch

Inside Diameter ---------- .4045 to .4055 Inch

Valve Stem Clearance in Guide ---------- .0015 to .0035 Inch

Distance Above Head Guide Must Protrude ------- 1.062 Inch Press Fit

VALVE SPRINGS

Free Length ---------- Approx. 2.438 Inches

Spring Pressure at Compressed Height of
1.531 Inches(Valve Open)---------- 95.5 Pounds; Install New Spring if Pressure is Less Than 86 Pounds.

Spring Pressure at Compressed Height of
1.938 Inches(Valve Closed) ---------- 45 Pounds; Install New Spring if Pressure is Less Than 41 Pounds.

ROCKER ARM ASSEMBLY

Rocker Arm Bushings --------- Replaceable Precision Bronze Bushing

Number of Bushings ----------8

Lubrication ---------- Pressure Lubricated; Crankcase Oil to Rocker Arms Metered by Camshaft.

Oil Holes in Rocker Arm Shaft ----Oil Holes Must Face Push Rod Side of of Engine Only. Shaft Cannot Be Rotated.

Positioning of Exhaust Valve
Rocker Arms ----------Spacer Washers Position Exhaust Valve Rocker Arm and Eliminates End Play Without Binding.

Outside Diameter of Rocker Arm Shaft---------- .872 to .873 Inch

Inside Diameter of Rocker Arm Bushing----------.8745 to .8755 Inch

Rocker Arm Shaft Spring
Spring Pressure at Compressed Height of
1.562 ----------10 Pounds;Install New Spring if Pressure is Less than 8.500 Pounds

OIL PUMP

Type ---------- Positive Displacement, Gear Type Pump Driven off Camshaft.

Pressure Relief Valve ------ Maintains 40 to 45 Pounds Full Pressure (Oil Warm, Engine Operating at Full Governed Speed) Relief Valve is Adjustable.

WATER PUMP AND THERMOSTAT

Type of System ----------Pressurized Thermostat Continuous By-Pass Type;Forced Circulation (Pump).

Type Pump ---------- Impeller Vane Type

Temperature Control---------- By-Pass Type Thermostat

FUEL SYSTEM
Gasoline

Type of System ---------- Gravity Flow

Flange ---------- SAE 1.250 Inch

Load Jet ---------- Adjustable

TIGHTENING TORQUE SPECIFICATIONS

Engine	Torque in Ft. Lbs.	Size	Threads per In.	Type
Camshaft Nut ----------	125	1-1/8	12	NF*
Connecting Rod Bearing Capscrews--------	95 to 105	1/2	20	NF
Crankshaft Pulley Bolt----	100	5/8	18	NF
Cylinder Head Cover (Valve Cover)Stud Nuts----	5 Max	7/16	20	NF
Cylinder Head Bolts (Grade 8)----------	145 to 150	9/16	18	NF
Flywheel to Crankshaft Capscrews ----------	100	5/8 9/16	18 18	NF NF
Crankshaft Rear Oil Seal Retainer Capscrews-------	25	3/8	16	NC**
Generator Mounting Capscrews ----------	15	5/16	18	NC
Injectors, Diesel Fuel Clamp Stud Nuts, Injector to Cylinder Head (Diesel)----------	14 to 17	3/8	24	NF
Injector Nozzle Cap Nut (Diesel) ----------	50 to 55			
Powrcel Clamp Screws (Diesel) ----------	100	1-1/8	16	NC
Mainbearing Capscrews--	145 to 155	5/8	11	NC
Manifolds				
Manifold Clamp Stud Nuts ----------	25	7/16	20	NF
Water Manifold Hold Down Capscrews----------	15	5/16	18	NC
Oil Filter Mounting Capscrews----------	25	3/8	16	NC
Oil Pan Capscrews--------	40	3/8	16	NC
Oil Pump Cover Capscrews----------	25	1/4	20	NC
Rocker Arm Bracket Studs and Capscrews ----------	40	7/16	14	NC
Water Pump and Fan Shaft Nut ----------	60	5/8	18	NF
Water Pump Mounting Capscrews ----------	25	3/8	16	NC

Maximum Backlash at
Tightest Point(All Timing Gears)---------- .002 to .005 Inch

Maximum Backlash at
Loosest Point(All Timing Gears)---------- .006 Inch

National Fine*
National Coarse**

GENERAL TORQUE SPECIFICATION TABLE (Revised 5-64)

USE THE FOLLOWING TORQUES WHEN SPECIAL TORQUES ARE NOT GIVEN

NOTE: These values apply to fasteners as received from supplier, dry, or when lubricated with normal engine oil. They do not apply if special graphited or moly-disulphide greases or other extreme pressure lubricants are used. This applies to both UNF and UNC threads.

SAE Grade No.	5		8 *	
Bolt head identification marks as per grade Note: Manufacturing Marks Will Vary				
	Torque Foot Pounds		Torque Foot Pounds	
Bolt Size	Min.	Max.	Min.	Max.
1/4"	9	11	12	15
5/16	15	18	24	28
3/8	35	40	45	50
7/16	54	60	70	80
1/2	80	90	110	125
9/16	110	120	160	180
5/8	150	165	220	240
3/4	260	280	380	420
7/8	360	400	600	660
1"	540	600	900	1000
1-1/8	720	800	1280	1440
1-1/4	1000	1100	1800	2000
1-3/8	1460	1680	2380	2720
1-1/2	1940	2200	3160	3560

* Thick nuts must be used with Grade 8 bolts

TIMING CHART

ENGINE	FULL LOAD GOVERNED ENGINE SPEED	NUMBER OF DEGREES
A251G—W9	1800	32° BTDC
A267D—W9	1800	33° BTDC
A284G—W7 / W9A	2000	32° BTDC
A301D—W7 / W9A	2000	32° BTDC

VALVE TIMING

With valve clearances set correctly, dial indicator mounted above valve stem, reading taken with valve .040" off its seat.

A267D and A301D Inlet Opening (No. 1 Cyl.) ---------- 3° BTDC

A251G and A284G Inlet Opening (No. 1 Cyl.) ---------- 6° ATC

NOTE "Inlet opening" is the only position on these engines that can be checked by the crankshaft pulley marks. Since the crankshaft pulley is only marked to 5° ATC, the 6° ATC mark will have to be measured and scribed on the pulley. Use the degree marks already on the pulley for measurement. If this position is correct, it can be assumed that the timing gears are correctly marked and properly assembled.

NOTE: The CASE CORPORATION **reserves the right to make improvements in design or changes in specifications at any time without incurring any obligation to install them on units previously sold.**

SECTION

K

SERVICING THE

●

CYLINDER HEADS

●

VALVE SYSTEMS

●

ROCKER ARMS

●

DECOMPRESSOR

ON

CASE POWRCEL DIESEL ENGINES

Rac. Form 9-76972

PRINTED IN U.S.A.

TABLE OF CONTENTS

CYLINDER HEAD AND COMPONENTS - Disassembly and Installation . K-2 thru K-5

DECOMPRESSOR (If So Equipped) - Disassembly and Assembly K-6

ROCKER ARMS AND SHAFTS - Disassembly, Inspection and Assembly K-8

CYLINDER HEAD AND VALVES - Disassembly and Assembly K-10

EXHAUST VALVE ROTATORS K-10

VALVES, GUIDES AND SPRINGS - Inspection K-12

INTAKE AND EXHAUST VALVES - Refacing K-14

INTAKE AND EXHAUST VALVE SEATS - Grinding K-15

LOCATING TOP DEAD CENTER AND TAPPET ADJUSTMENT K-16

CYLINDER HEAD AND COMPONENTS

(Refer to Figure K-1)

Removal

Steam clean the engine completely before doing any disassembly or service work.

Drain cooling system. Remove the intake, exhaust and water manifolds. Remove the rocker arm covers. Disconnect and remove the decompressor if so equipped, Page K-6.

Remove the rocker arm assemblies and tag them for proper installation. (Refer to Page K-8.

Disconnect the high pressure fuel lines to the injectors and cap them. Disconnect the fuel leak-off tubes between each cylinder head and cap them.

Remove the push rods and tag or store them in a holder or rack so they can be installed in their same locations.

Remove the cylinder head bolts or nuts and lift the heads off the engine. Remove the head gaskets and discard them.

Inspection and Installation

Remove all carbon and clean all parts before installation.

STANDARD HEAD GASKETS

If you are installing the standard gasket, install the new gasket with new rubber seals. The gasket must be installed with either the copper side up or the side with the case part number up. Continued on Page K-5.

FIRE RING HEAD GASKETS

If you are installing the fire ring head gasket, inset B, cylinder sleeve protrusion must be checked to determine which fire ring to install. Only the standard fire ring is included in the valve grind gasket kit, however a thicker fire ring (.004") is available if the protrusion checks indicate a need for it. The thicker fire ring can be identified by a blue marking stripe.

Refer to Pages K-4 and K-5 for the procedure to follow when installing the fire ring cylinder head gasket.

REMOVAL AND INSTALLATION OF CYLINDER HEAD AND COMPONENTS

CAUTION
DO NOT OVER TIGHTEN COVER NUTS

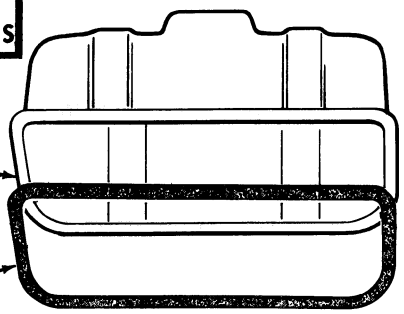

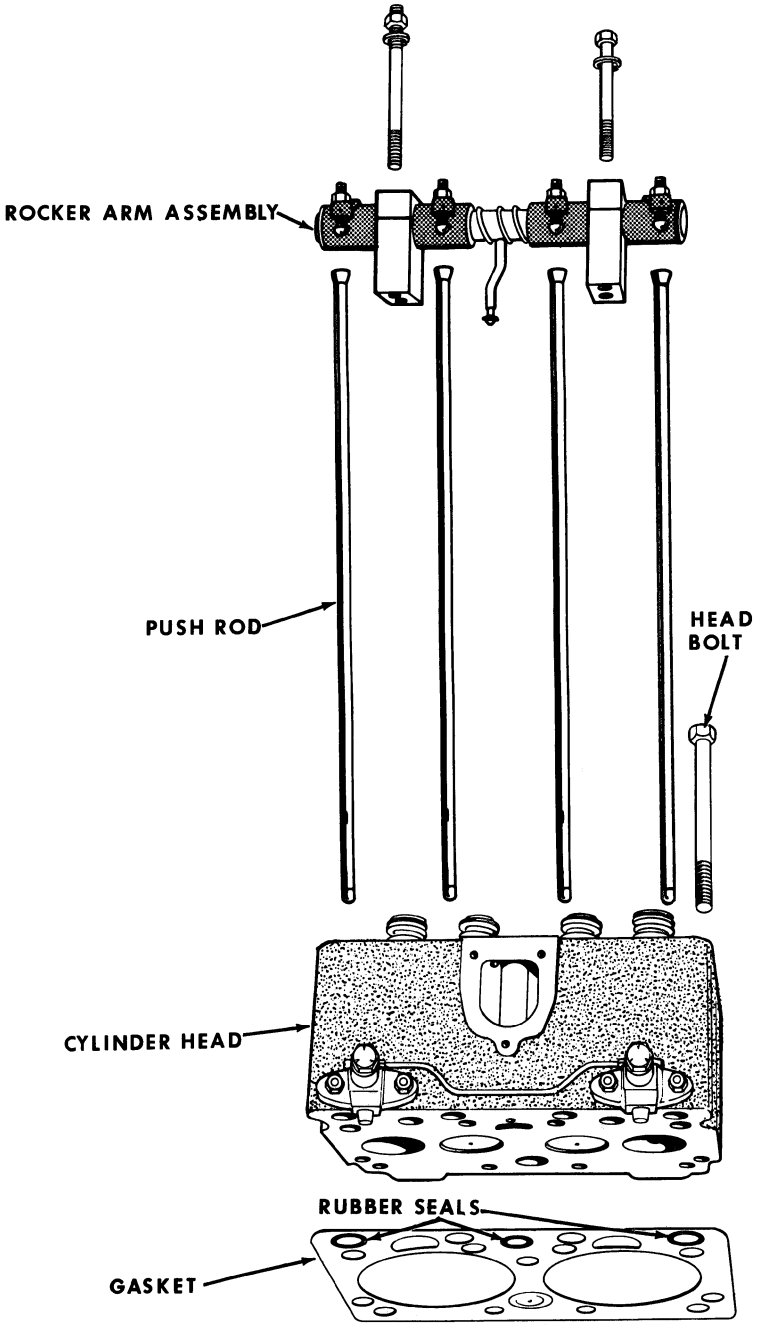

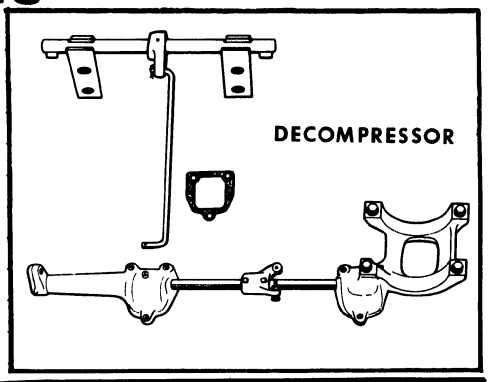

Inset A

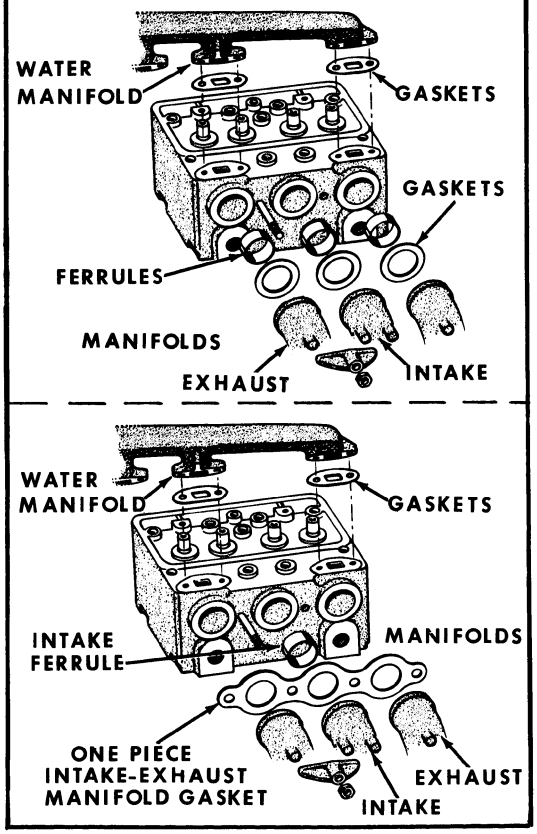

Inset B
FIRE RING HEAD GASKET

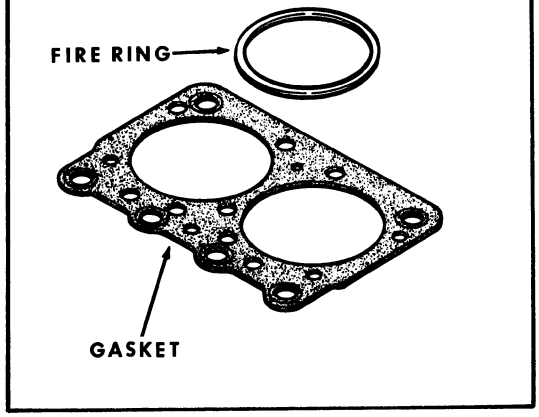

Inspection and Installation Fire Ring Gaskets (Continued)

The following procedure must be followed when installing the fire ring head gasket:

1. Clean the top surface of the block and sleeve flange carefully. All traces of carbon and other deposits must be removed. During the final cleaning operation, the use of a rag dampened in solvent is recommended.

2. Using a small stone, remove any small burrs in the areas to be measured so that accurate readings can be obtained.

3. Using plate OTC970-12* from cylinder sleeve puller OTC970*, 010974AB ball and clamping bar, clamp the cylinder sleeve in place, Figure K-2. Torque the hold down capscrews evenly to 50 foot pounds. ***NOTE*** Refer to Figure K-2 for clamping bar dimensions.

*These tools are available through local Owatonna Tool Dealers or the Owatonna Tool Co., Owatonna, Minnesota.

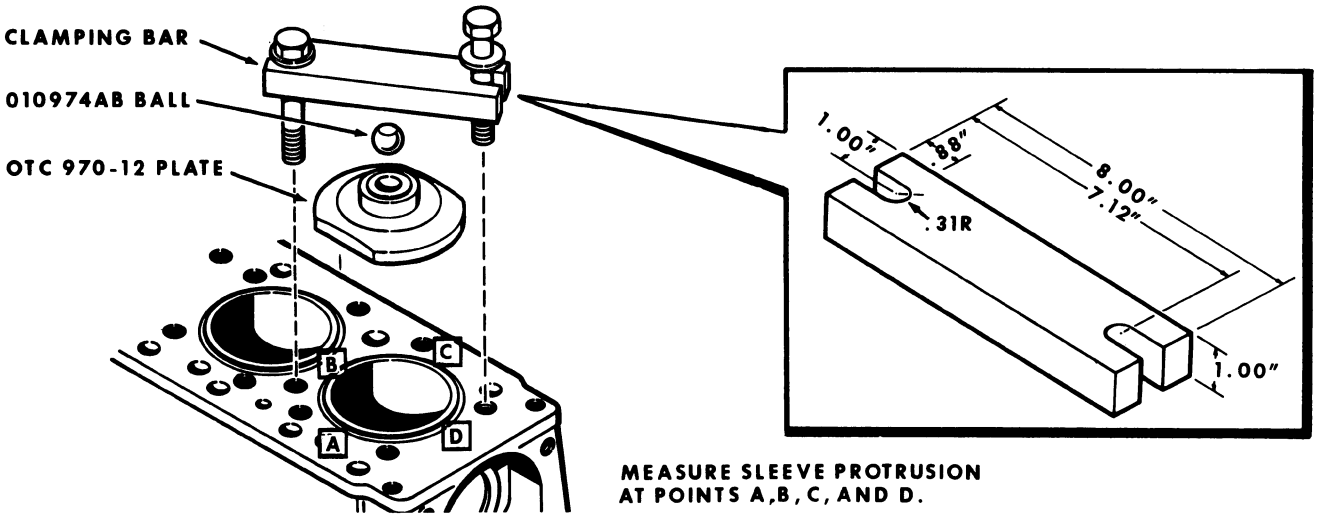

Figure K-2

4. Either a magnetic base dial indicator or a depth micrometer can now be used to determine the cylinder sleeve protrusion as indicated in Figure K-3. Refer to chart, Figure K-5, to make sure the correct fire ring is used.

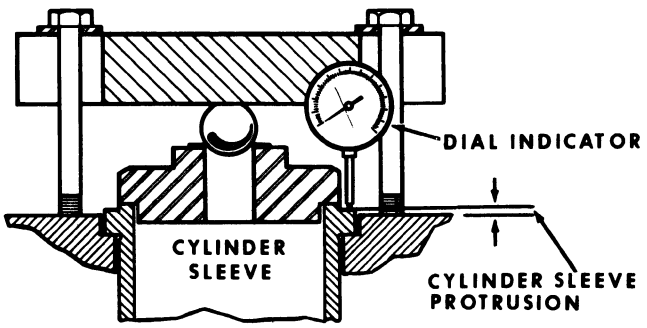

Figure K-3

5. Install cylinder head gaskets. ***IMPORTANT*** Two of the capscrew holes in the gasket are slightly smaller and act as guides to position the gasket as well as the fire ring,

Figure K-4. Regular line-up studs could be used for most engines. In some instances it is very difficult to install the

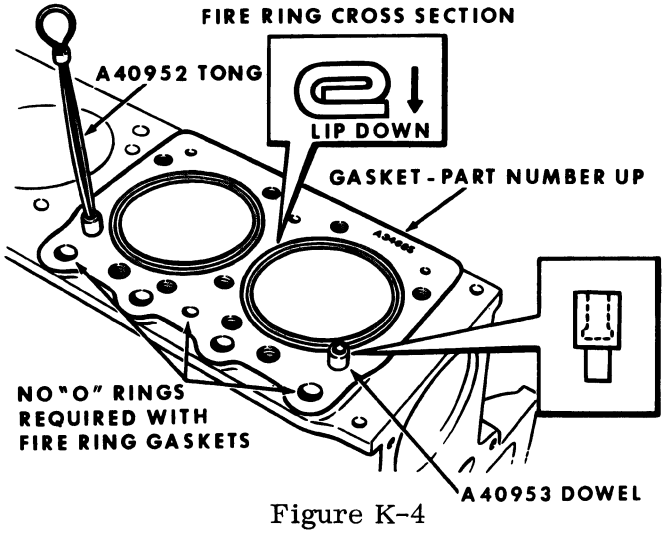

Figure K-4

rear cylinder head due to the limited space in which to place the head when lowering it down over the long guide studs.

CYLINDER SLEEVE PROTRUSION	USE STANDARD FIRE RING	USE OVERSIZE(THICKNESS) FIRE RING
BOTH SLEEVES UNDER ONE HEAD FLUSH TO .002"		X
BOTH SLEEVES UNDER ONE HEAD .002" OR OVER BUT LESS THAN .0025" BETWEEN SLEEVES	X	
BOTH SLEEVES UNDER ONE HEAD OVER .0025" DIFFERENCE BETWEEN SLEEVES	ON THE HIGH SLEEVE	ON THE LOW SLEEVE

Figure K-5

6. For difficult installations, the use of dowel pins and a tong are recommended and can be purchased through a local Snap-On Tool Dealer or J.I. Case Central Parts Dept. under the following part numbers.

Snap-On Tool No.	Case Part No.
CF83-1 Tong	A40952
CF83-4 Dowel	A40953

7. Install the fire rings with the lip downwards, Figure K-4. ***NOTE*** Fire ring gaskets must be installed dry.

8. Carefully clean the cylinder heads as described in No. 1. If evidence of fretting or erosion exist in the area of the fire ring contact or if the head is warped more than .005", the head must be resurfaced.

9. Install cylinder heads and several bolts, then remove the A40953 dowels using A40952 tong and install all the bolts.

STANDARD AND FIRE RING HEAD GASKETS

10. Install intake and exhaust manifold ferrules and new gaskets. ***NOTE*** When the manifolds are designed for the one piece manifold gasket, the ferrules are used only in the intake ports. Refer to Page K-3, inset A. Install the intake and exhaust manifolds and torque to proper torque. Refer to Specification Section.

11. Torque cylinder head bolts or nuts to the proper sequence illustrated in Figure K-6. The three torquing steps recommended are 50 foot pounds, 100 foot pounds and finally 150 foot pounds.

12. Install the push rods in their original location. Connect the high pressure fuel lines and leak-off tubes. Install the decompressor (if so equipped.) Refer to Page K-16 for proper firing order.

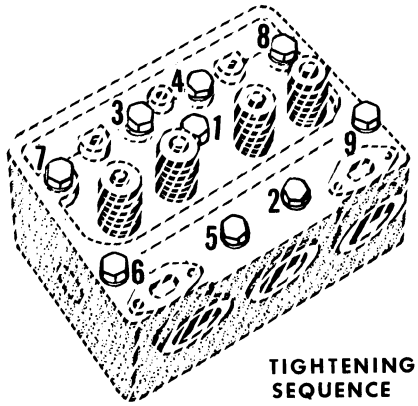

Figure K-6

13. Install the rocker arm assemblies in their original location.

14. Adjust the valve tappet clearance, refer to Page K-16.

15. Fill cooling system and start engine. Check that the rocker arms are receiving lubrication.

16. Run engine for approximately one (1) hour, under load if possible, to thoroughly warm up the engine and seat the head gaskets.

17. Stop the engine and retorque the cylinder head bolts or nuts to 150 foot pounds while the engine is still hot. Check and readjust the tappets.

18. Clean the rocker arm covers and remove the old gasket. Install new gaskets and seals; then install covers. Refer to Specification Section for proper torque. Do not over torque the valve cover nuts.

INSPECTION OF DECOMPRESSOR

(If So Equipped)

(Refer to Figure K-7)

When the decompressor is engaged all the exhaust valves must be held in an open position. Inspect the trip pins for excessive wear. Inspect for bent or worn control linkage if the valves are not held open.

When the decompressor is disengaged and the tappet clearance is correct be sure the trip pins release the rocker arms completely. Inspect for loose coupling set screws, bent or worn control linkage, control link cotter pin missing or a pin in one of the control levers sheared off.

DISASSEMBLY OF DECOMPRESSOR

(Refer to Figure K-7)

Remove the control link cotter pins (1) and link (2). Remove the decompressor control housings (3) and the housing gaskets (4). Loosen the coupling set screws (5) and remove the coupling (6).

Remove the roll pins (7) from the control levers (8). Remove the control shafts (9) from the housings. Remove the control levers (8). Remove the trip pins (10) from the decompressor shaft (11). Remove and discard the "O" rings (12) from the shafts.

ASSEMBLY

(Refer to Figure K-7)

Install the trip pins (10) and lever (8) with roll pin (7) to the decompressor mounting brackets (13). Install the new "O" rings (12) on the shafts - Install the shafts (9) into the housings (3) and install the control levers (8) with roll pins (7). Install the shaft coupling (6) and tighten square head set screws (5).

Install the housing and shaft assembly to the cylinder heads with new gaskets (4). Install the control link (2) with cotter pins (1).

DECOMPRESSOR ADJUSTMENTS

(Refer to Figure K-7)

The stop bolts (14) in the coupling stop (6) should be adjusted so the decompressor can open the valves when engaged and lift the trip pins so they are clear of the rocker arms when disengaged (Refer to Inset A). Tighten the lock nuts (15) on the stop bolts (14) after adjustment is made.

DISASSEMBLY AND ASSEMBLY OF DECOMPRESSOR

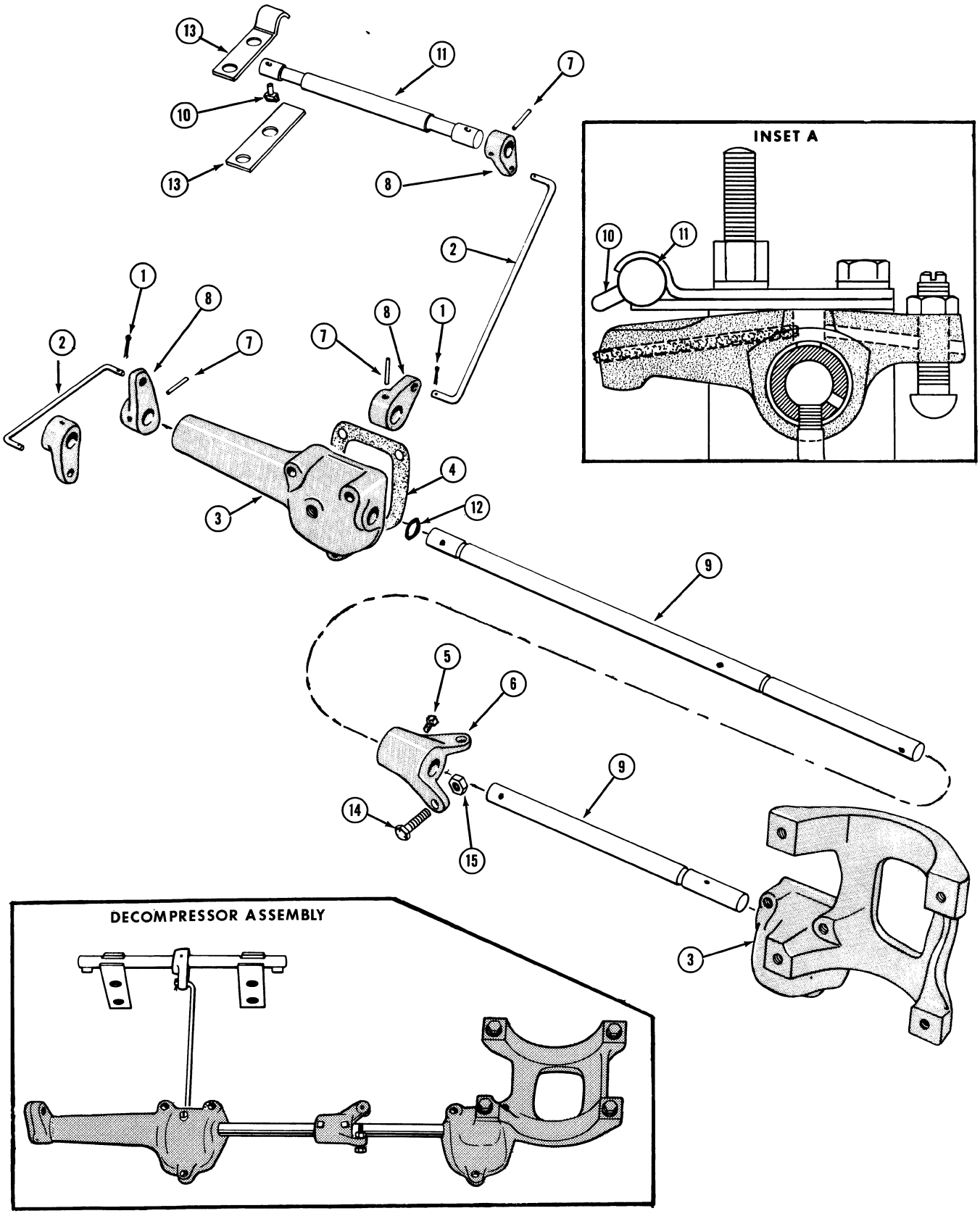

Figure K-7

DISASSEMBLY OF THE ROCKER ARMS (Refer to Figure K-8)

Remove the rocker arm shaft bracket studs (15) and bolts (16). Remove and tag shaft assemblies for installation.

Unscrew the oil tube (1) and discard the "O" ring (2). Remove the snap rings (3), spacer washer (5) and keep count of the number of washers at each end of the shaft. Tag each rocker arm for original location. Remove the exhaust rocker arms (6) and the shaft brackets (7) from each end of the shaft.

Remove the intake rocker arms (8) and the shaft spring (9). Remove the plugs (10) by using a rod and driving one plug clear thru the shaft. This will also clean out the dirt or sludge that has formed inside of the shaft.

Replacement shafts have these plugs installed at the factory. Remove the push rods and store them in a rack or holder so they can be installed in their original location.

Remove the oil wick (11) from each exhaust rocker arm and discard. Remove the bushing (12) from the cast rocker arm if it is worn using an Arbor (See Inset A).

INSPECTION (Refer to Figure K-8)

Inspect the shaft spring for proper tension and broken coils. Refer to "Specification" Section. Inspect the rocker arm shaft for excessive worn spots on the bottom side of the shaft. Replace shaft if worn condition exists.

Inspect the rocker arm bushings by installing each rocker arm on the shaft in its proper location. The rocker arm must be free on the shaft without any side "wobble" If any is noted replace the cast rocker arm bushing or replace the stamped rocker arm. Note the stamped rocker arm bushing is not replaceable. Replacement rocker arms come complete with bushings. Inspect the valve contact area on the rocker arm for wear. Replace if worn. Inspect the tappet adjusting screw for wear marks or pitting. Inspect the push rods for straightness, cracked or worn ends.

ASSEMBLY (Refer to Figure K-8)

Clean all parts thoroughly. Place new bushing on Arbor and press into the cast rocker arm so the bushing (12) is evenly centered in the rocker arm and the oil hole is lined up with the oil hole in the rocker arm, (See Inset A). Check the bushing for high or rough spots and if they exist, they should be honed out. Install new oil wick (11) in the exhaust rocker arm. Lubricate each part with engine oil as they are installed.

Install a shaft spring (9) and two intake rocker arms (8) on the shaft (4). When installing the cast rocker arms the adjusting screw and the shaft oil hole must be on the same side, (See Inset A).

When installing the stamped steel rocker arms the adjusting screw and the shaft oil hole must be on opposite sides (See inset B).

Install the shaft brackets (7) on the shaft with the split side toward the push rod side of the engine. Install the exhaust rocker arms (6) on the shaft. Install the same number of spacer washers (5) that were removed.

Install the snap rings (3) at each end of the shaft. Check the rocker arms for free movement. Install the oil tube (1) with new "O" ring (2). Install the push rods in their original location if they were removed. Install the adjusting screws (13) and lock nuts (14) if they were removed.

Install the rocker arm and shaft assembly on the cylinder head. Make sure all the push rods are engaged with the adjusting screws. Install the bracket studs (15) and bolts (16). Refer to "Specification" Section for proper torque. Check that the oil tube is in the oil hole in the cylinder head. Check exhaust rocker arms for excessive end play. One or more spacer washers can be used between the rocker arm and snap ring to remove the excessive end play. Check and adjust the tappet clearance. (Refer to Page K-16.)

DISASSEMBLY AND ASSEMBLY OF THE ROCKER ARMS

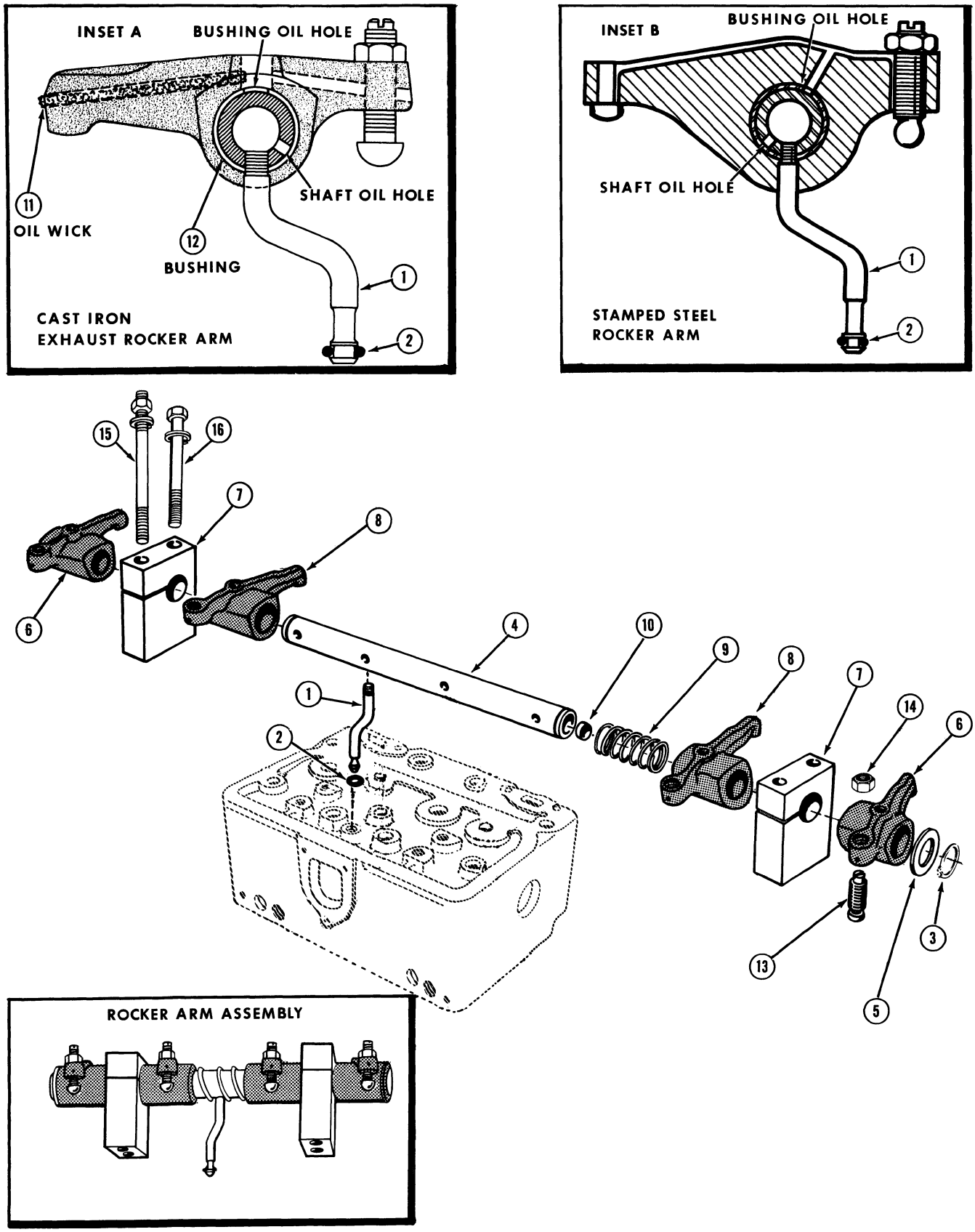

Figure K-8

DISASSEMBLY OF THE CYLINDER HEAD AND VALVES (Refer to Figure K-9)

Using a valve spring compressor (Refer to Inset A) compress the spring (1). Remove the valve retainer locks (2) and the spring retainers (3) or valve rotators (4). Remove the valve springs (1), valve stem oil seal (5) and the valve spring seat. Remove any carbon from the valve stems before they are moved from the head.

Remove the intake valves (7) and the exhaust valves (8) from the head and store them in a rack or holder. Remove the intake valve guide (9) exhaust valve guide (10) down through head using an Arbor (See Inset B). Refer to "Specification" Section for dimension of valve guides. The exhaust valve seats (11) can be removed with a special seat removing tool (See Inset C).

NOTE Never attempt to remove a valve seat with a center punch, cold chisel or pry bar.

To remove the expansion plug (12) it must be drilled and then pryed out.

ASSEMBLY (Refer to Figure K-9)

Clean head completely and check for cracks. Remove all carbon from the bore of the valve guides with a wire brush and blow out with compressed air.

Install new valve guides (9 and 10) using an Arbor (See Inset B) and press the guides into the head from the top of the head. The distance the guides must protrude above the head is given in the "Specification" Section.

To install new exhaust valve seats (11) clean the recess in the cylinder head. Place the valve seats in dry ice to shrink them for easy installation. Insert the valve seats in the head and drive them in place using suitable driver. Lubricate the valves (7 and 8) with engine oil and install them in the original location.

Install the valve spring seats (6), valve springs (1) and intake valve stem oil seal (5). Install the exhaust valve rotators (4) and the intake valve spring retainers (3). Compress the valve springs so the valve retainer locks (2) can be installed.

Install new expansion plug (12). Refer to Page K-2 for reinstalling the cylinder head.

EXHAUST VALVE ROTATOR (Refer to Figure K-9)

When re-installing the rocker arm assembly, check the operation of the exhaust valve rotators. To check the operation of the rotators, place a dab of white paint on the rotator - note its position; -- then start the engine and observe whether or not the rotator is turning. Replace any rotators that will not turn. Do not attempt repairs on rotators.

It is impossible to determine whether or not the rotator is turning without an identifying mark.

There is no set speed at which the rotators should turn; some rotators will turn faster than others. As long as the rotator is turning the valve, it is functioning properly.

NOTE

An excessive accumulation of deposits on the exhaust valve face and stem is also an indication that the rotators may not be functioning properly.

IMPORTANT

When installing valve rotators:

Reassemble the rotator with original valve as they tend to become matched parts when they wear in.

If it is necessary to install a new valve always install a new rotator and retaining lock.

DISASSEMBLY AND ASSEMBLY OF THE CYLINDER HEAD AND VALVES

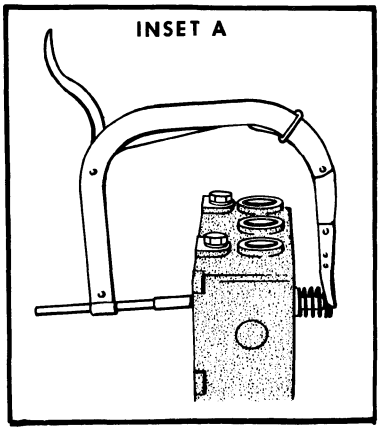

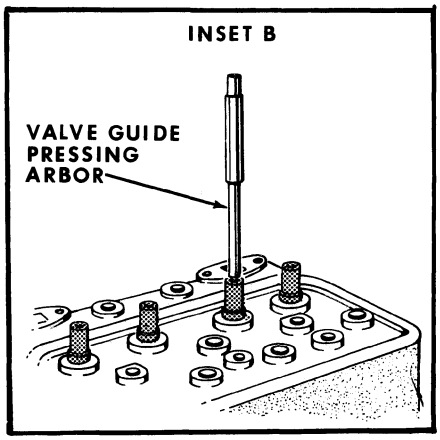

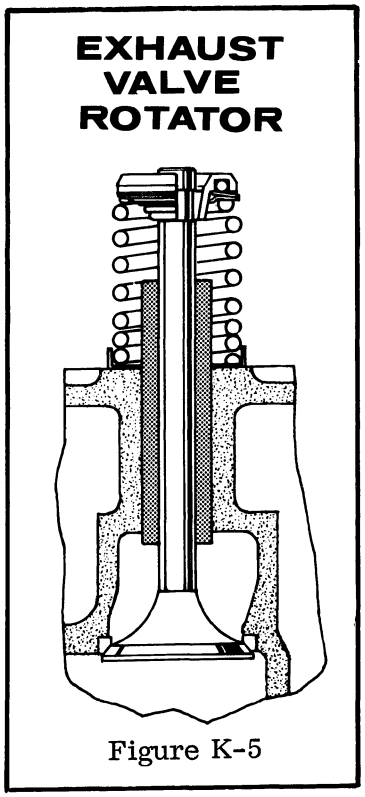

Figure K-5

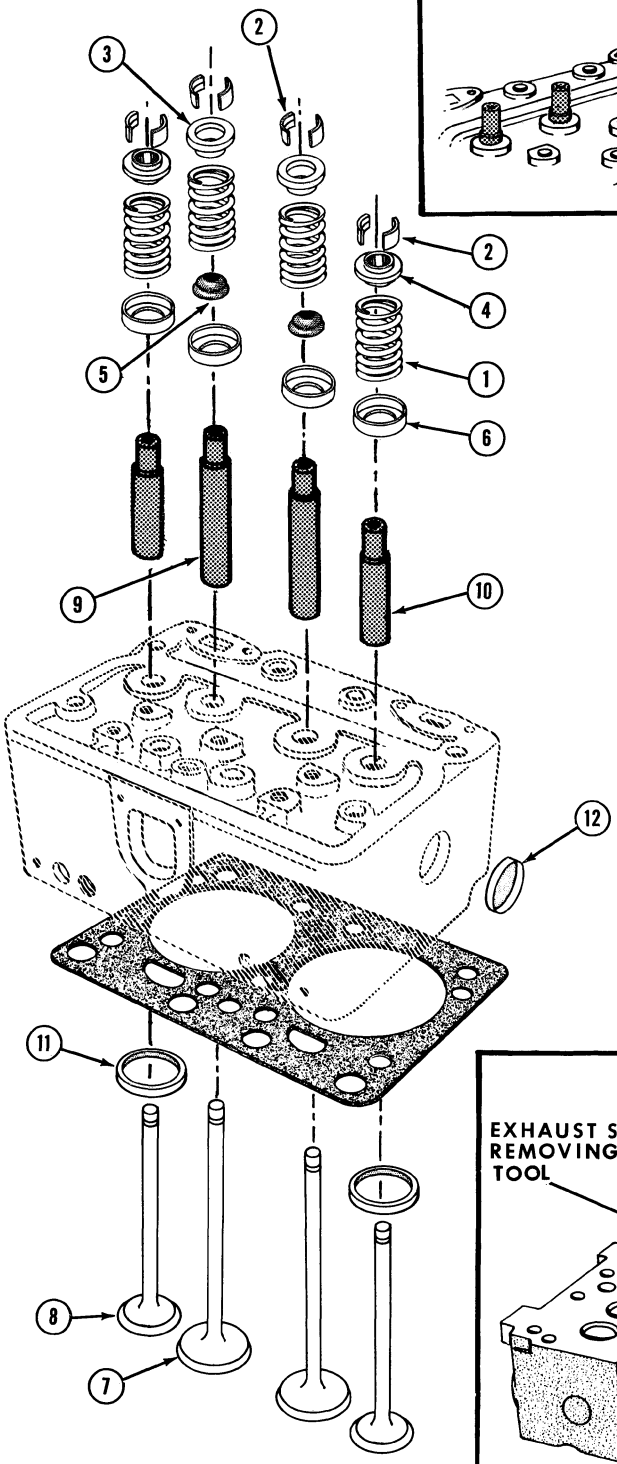

Figure K-9

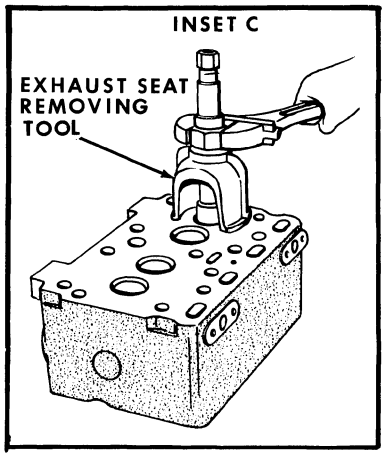

INSPECTION OF THE VALVES,GUIDES AND SPRINGS

Valve springs should be checked for flat squared ends, broken or cracked coils and correct spring pressure. Use a Valve Spring Tension Tester. Refer to the "Specification" Section.

Valve guides can be checked for wear by using a bore gauge and micrometer (Refer to Figure K-11)The valve guide should be checked at the top, middle and bottom of the bore for wear.Refer to Figure 10. The inside diameter wear limits of the valve guide should not exceed the specification given in the "Specification" Section, at any point along the bore of the guide. Replace guide if it does. Check the new valve guides after installation to make sure that the bore is not less than the inside diameter given in the "Specification" Section. Using an Arbor equal to the inside diameter of the valve guide will keep the guide from collapsing when pressed in place.

Clean the valves with a power driven fine wire brush, being very careful not to scratch the valve stems. Reference is made to the different parts of the valve (Refer to Figure K-12.)

Inspect the valves for excessive wear or necked stems (Refer to Figure K-13). This can be caused by lack of lubrication, plugged or dirty water passages or operating the engine under continuous overload at excessive engine RPM. Valves should be replaced.

Inspect the valves for deep grooves in the face (Refer to Figure K-14.) This can be caused by abrasives entering the engine through the intake system or not servicing the air cleaner regularly. A leaking valve cover gasket can also cause this condition. If grinding the valve face will not correct this condition, discard the valves.

Inspect the valve face and stem for rust or pitting (Refer to Figure K-15). Rust or pitting can usually be removed by grinding the valve face. If rust or pitting on the valve stem exist the valve should be replaced. These conditions can be caused by using poor quality engine oil or fuel that doesn't meet the specification given in the Operator's Manual. Rust could be caused by improper storing of the engine.

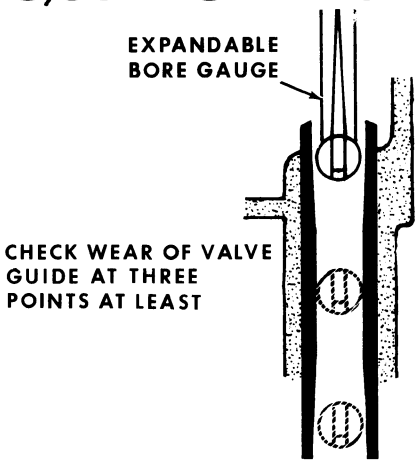

Figure K-10

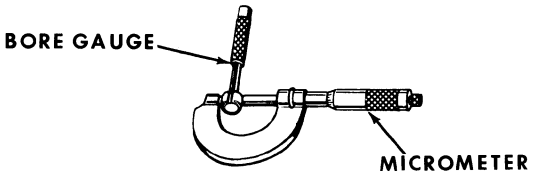

Figure K-11

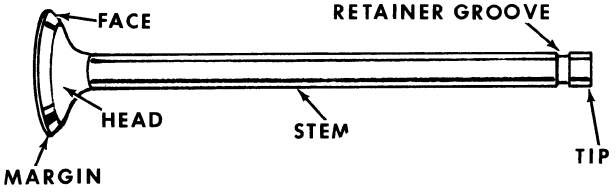

Figure K-12

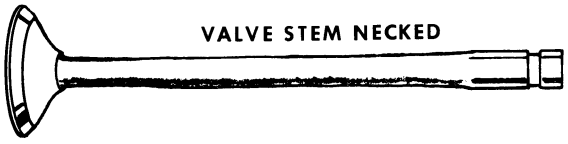

Figure K-13

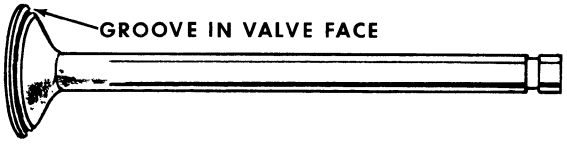

Figure K-14

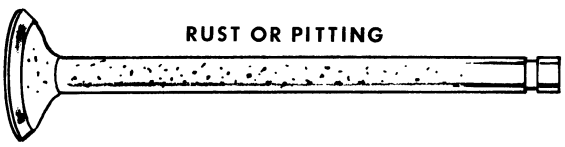

Figure K-15

INSPECTION OF THE VALVES,GUIDES AND SPRINGS (Contd)

Heavy carbon or varnish deposits on the valve (Refer to Figure K-16) should be removed before valves are ground. This condition is usually caused by worn piston rings and sleeves which allow too much oil to reach the combustion chamber. This condition could also be caused by worn valve guides or no seals on the intake valves. Low operating temperature is still another cause. These conditions should be corrected or the same trouble with the valves will happen again.

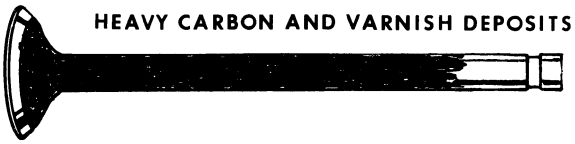

Figure K-16

Inspect the valve head for dishing and the valve face for deep burned spots, Figure K-17. These conditions can't be corrected by grinding the valves. The valves should be replaced. These conditions are usually caused by running the engine under excessive load at high engine temperatures.

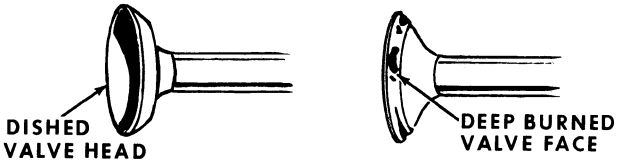

Figure K-17

Valves with worn keeper grooves or the stem is worn or dished beyond the chamfer must be replaced (Refer to Figure K-18).



Figure K-18

The checking of the valve stem diameter can best be done with a good accurate micrometer (Refer to Figure K-19). The valve stem should not vary more than the wear limits given in the "Specification" Section at any point on the valve stem. If this condition exists the valves must be replaced.

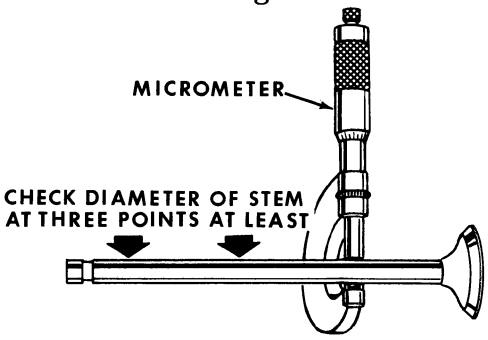

Figure K-19

The checking of the valve face runout should be done after the valves have been ground. A Vee block type holder with a dial indicator (Refer to Figure K-20) should be used to check the valve face runout. The valve face should not vary more than the specification given in the "Specification" Section. The valve stem runout can also be checked with this Vee block and dial indicator.

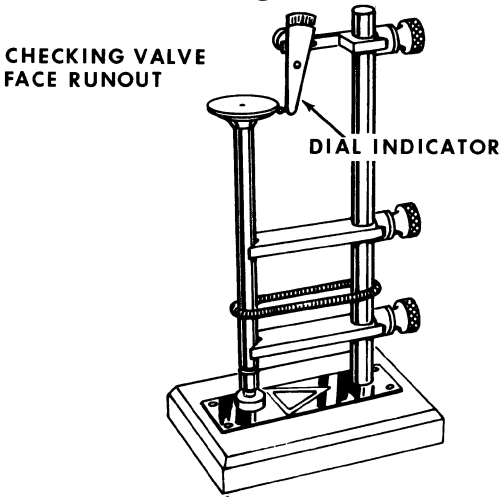

Figure K-20

IMPORTANT

Small amounts of very fine pitting, Figure K-21, may be found on the surfaces of the valve faces and seats after the valves are cleaned. These are normal and will not affect engine performance. This fine pitting is caused by a normal oxidation process and can happen on any engine during the run-in period. It is not necessary to grind valves or seats if this fine pitting is found as the pitting will generally reoccur after the engine is run for a few hours.



Figure K-21

REFACING INTAKE AND EXHAUST VALVES

Before refacing the valves they should be wire brushed, cleaned and inspected. Refer to the "Specification" Section for the correct valve face grinding angle. Set the refacing machine protractor at this angle. Be sure the chuck of the machine is clean before installing valve. Dress the grinding wheel before starting to reface each valve. Take only light cuts as the valve is refaced and the last cut must be very fine so the valve face will have a polished finish.

IMPORTANT Replace any valve that after grinding has a thin edge or margin (Refer to Figure K-22). If the margin on the ground valve is less than half the margin on a new valve replace the valve.

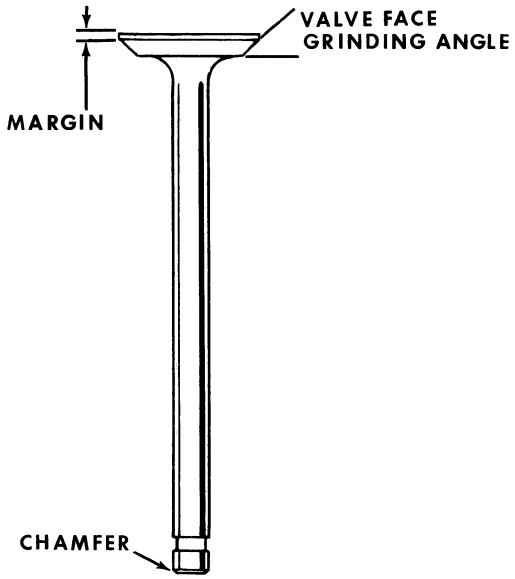

Figure K-22

The tip end of the valve should be checked for roughness or wear. Usually this can be removed with some very light cuts against the side of the grinding wheel and will square up the end. Never grind the chamfer off the valve stem end. Any excessive grinding should not be done to the stem end. Replace the valve.

Before installing new valves a fine finish grinding should be done to each new valve. Check the valve face and valve stem runout before installing (Refer to Page 13).

The valve face and seat contact location should be checked. Place valve bluing (Prussion Blue) on the face of the valve. Install the valve in the head and rotate the valve on its seat. Remove the valve and inspect the contact area on the valve face. The bluing will have been removed from the valve face evenly at the top edge of the contact area (Refer to Figure K-23). This is due to the fact that the valve face and seat are ground with 1° INTERFERENCE ANGLE. Refer to "Specification" Section.

When the top edge of the contact area is too high or low on the valve face, the seat contact area must be moved. This is done by using the narrowing stones (Refer to Page K-15). The contact area width should never exceed the dimension given in the "Specification" Section.

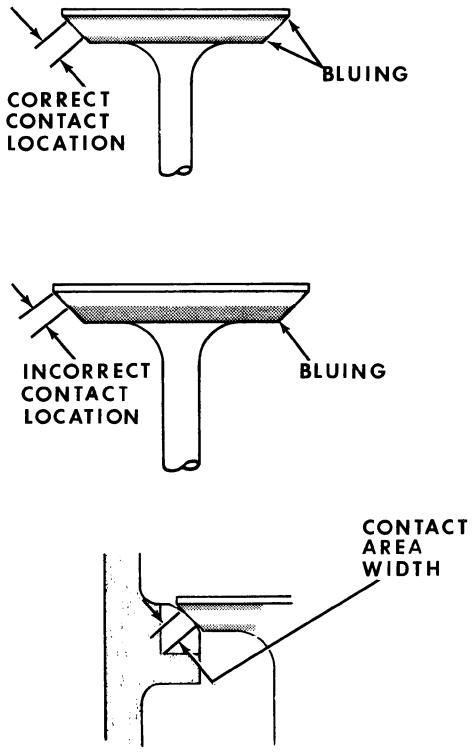

Figure K-23

CAUTION DO NOT USE BLUING TO CHECK VALVE SEAT AND VALVE FACE RUN-OUT. The valve face could be contacting the seat at only a few points, but the bluing would still be rubbed off by the high points and make it appear as though you had solid contact all around. The only thing bluing will indicate is the location on the valve face where the seat is contacting -- no more!

GRINDING INTAKE AND EXHAUST VALVE SEATS

Always use a precision type power seat grinder similar to the one shown in Figure K-24. The valve seats can not be ground with manual operated equipment. The intake valve seat is part of the head and for this reason only a finishing stone should be used to grind the seat. The exhaust valve seat should be first ground with a roughing stone and then use a finishing stone. Take very light cuts with the grinding stones so just enough metal is removed to end up with a good smooth seat finish.

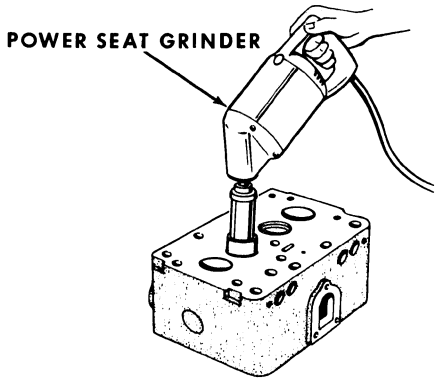

Figure K-24

Refer to the "Specification" Section for the proper specifications of the intake, exhaust seats and valve guides (Refer to Figure K-25). From the specifications the proper grinding stones and pilot can be chosen.

When using the grinding stones the seat grinding angle of the stone should be dressed on a (stone dresser) frequently so the seat angle will not vary when grinding the seats.

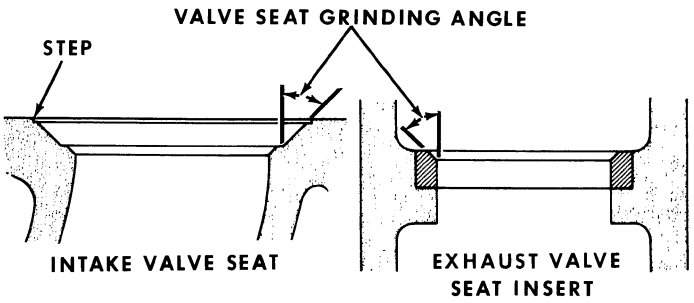

Figure K-25

INSPECTION

The valve seat runout should be checked after finish grinding with a dial indicator and seat grinding pilot (Refer to Figure K-26). After checking the runout, turn the pilot 1/4 turn and check runout again. The width of the valve seat contact area must also be checked. Refer to "Specification" Section for dimension of seat width contact area.

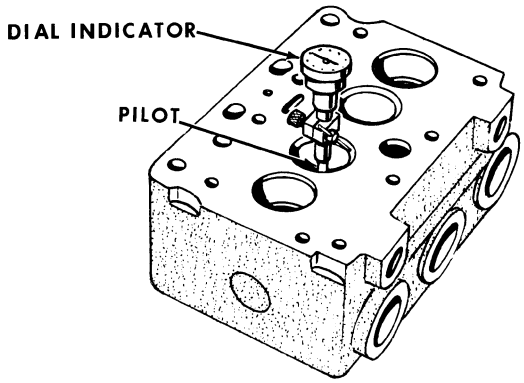

Figure K-26

The valve seat contact area width should never vary from this dimension. The exhaust valve seat contact area width and location can be changed by using the 30° and 60° narrowing stone Refer to Figure K-27.

CAUTION The intake valve seat should not be changed by using the narrowing stones. If the seat width exceeds the dimension given in the "Specification" Section, the cylinder head should be replaced.

When the step above the intake seat (Refer to Figure K-25) has been reduced by the grinding operation, installing a new valve will help to restore the compression that would normally be lost by excessive grinding of the seat and valves. Excessive grinding of the valves and seats moves the valves further into the head thereby reducing the compression ratio.

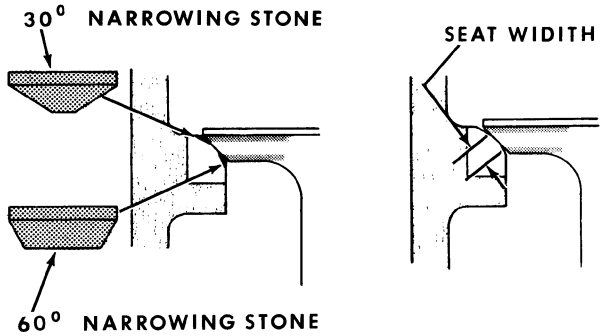

Figure K-27

LOCATING TOP DEAD CENTER AND TAPPET ADJUSTMENT

Refer to "Specification Section" for the correct tappet clearance.

The two valve tappets for each cylinder are to be checked and adjusted when the piston for that particular cylinder is at top dead center on the compression stroke. Start with the number 1 cylinder (nearest the radiator) and follow the sequence of firing order.

4 Cylinder

Firing Order ---------- 1-3-4-2

The top dead center position of the pistons for checking valve clearance is indicated by marks on the crankshaft pulley flange. The 4 cylinder engines use the marks 180°apart, Figure K-28.

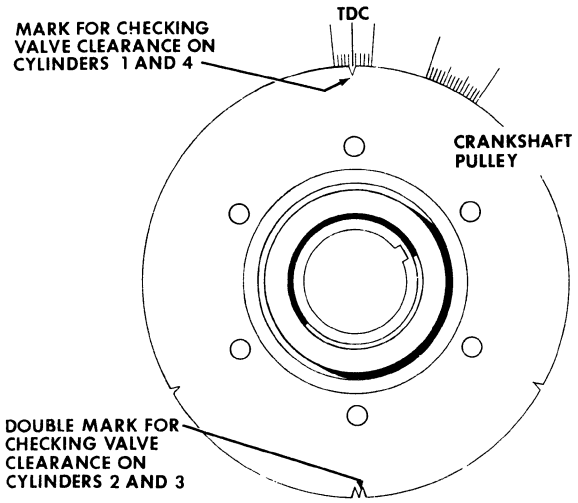

Figure K-28

NUMBER 1 CYLINDER

To set No. 1 cylinder on top of compression stroke remove the valve covers and crank engine until the push rods are loose on No.1 cylinder (top of compression stroke) and the rocker arms on the opposing cylinder No. 4 can be rocked open or closed with a slight back and forth movement of the crankshaft. Then check and adjust the valve tappets on No. 1 cylinder, refer to Figure K- 29.

NUMBER 3 CYLINDER

Crank the engine approximately 1/2 turn or until the push rods on No. 3 cylinder are loose and the rocker arms on the opposing cylinder No. 2 can be rocked open or closed slightly by crank movement. Adjust tappets on No. 3 Cylinder.

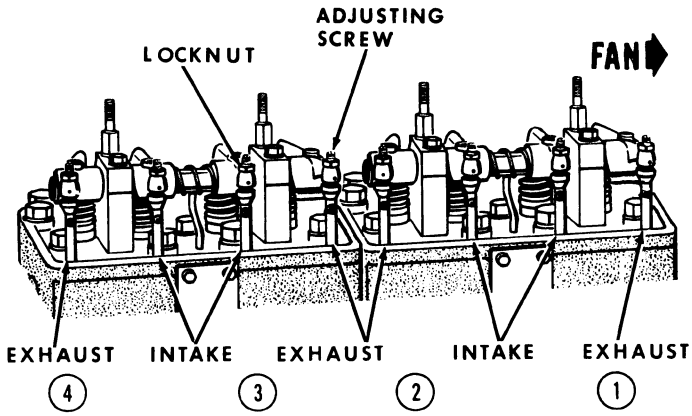

Figure K-29

NUMBER 4 CYLINDER

Crank engine another 1/2 revolution or until the push rods on No. 4 cylinder are loose and the rocker arms on No. 1 can be rocked open or closed slightly by crank movement. Adjust tappets on No. 4 cylinder.

NUMBER 2 CYLINDER

Crank engine another 1/2 revolution or until the push rods on No. 2 cylinder are loose and the rocker arms on No. 3 can be rocked open or closed slightly by crank movement. Adjust tappets on No. 2 cylinder.

While the valve covers are removed, start the engine and check that the rocker arm assemblies are receiving proper lubrication; then install new valve cover gaskets and replace valve covers properly to prevent oil leaks.

LOCATING TOP DEAD-CENTER AND TAPPET ADJUSTMENT

6 Cylinder

Firing Order ---------- 1-5-3-6-2-4

The top dead center position of Nos. 1 and 6 cylinders is indicated by the TDC mark on the crankshaft pulley flange.

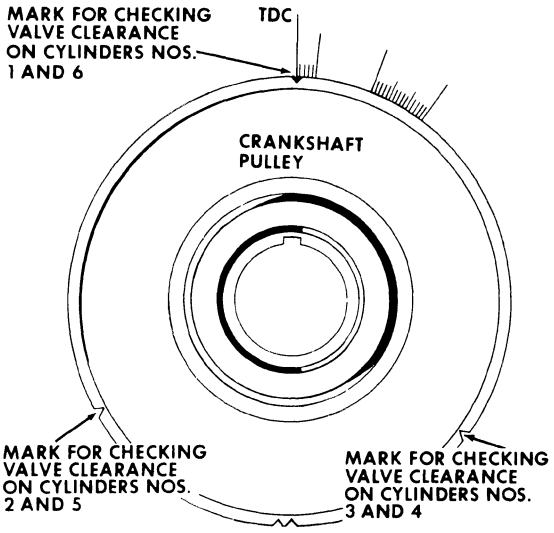

Figure K-30

NUMBER 1 CYLINDER

To set No. 1 cylinder on top of compression stroke, remove the valve covers and crank engine until the push rods are loose on No. 1 cylinder (top of compression stroke) and the rocker arms on the opposing cylinder No. 6 can be rocked open or closed with a slight movement of the crankshaft. Then crank and adjust the valve tappets on No. 1 cylinder, refer to Figure K-31.

NUMBER 5 CYLINDER

Crank the engine approximately 1/3 turn or until the push rods on No. 5 are loose and the rocker arms on No. 2 can be rocked open or closed slightly by crank movement. Adjust tappets on No. 5 cylinder.

NUMBER 3 CYLINDER

Crank engine another 1/3 revolution or until the push rods on No. 3 cylinder are loose and the rocker arms on No. 4 can be rocked open or closed slightly by crank movement. Adjust tappets on No. 3 cylinder.

NUMBER 6 CYLINDER

Crank engine another 1/3 (TDC mark) revolution or until the push rods on No. 6 are loose and the rocker arms on No. 1 can be rocked open or closed slightly by crank movement. Adjust tappets on No. 6 cylinder.

NUMBER 2 CYLINDER

Crank engine another 1/3 revolution or until the push rods on No. 2 cylinder are loose and the rocker arms on No. 5 can be rocked open or closed slightly by crank movement. Adjust the tappets on No. 2 cylinder.

NUMBER 4 CYLINDER

Crank engine another 1/3 revolution or until the push rods on No. 4 cylinder are loose and the rocker arms on No 3 can be rocked open or closed slightly by crank movement. Adjust the tappets on No. 4 cylinder.

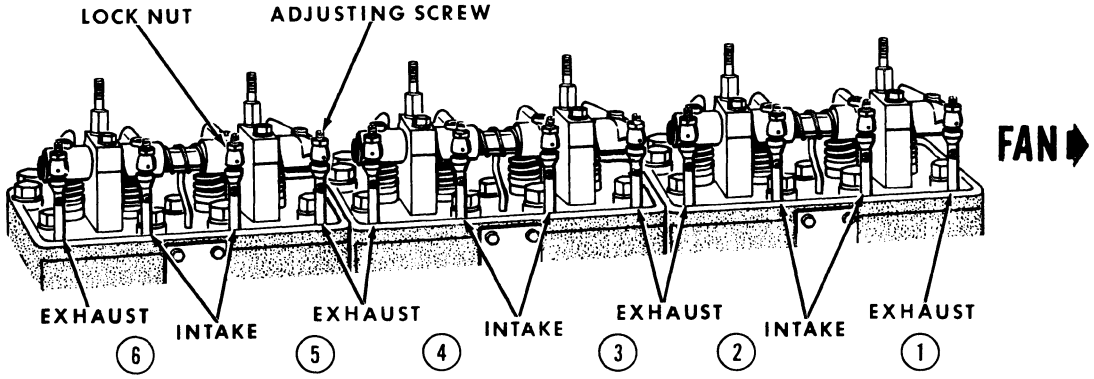

Figure K-31

NOTE: The CASE CORPORATION **reserves the right to make improvements in design or changes in specifications at any time without incurring any obligation to install them on units previously sold.**

SECTION

L

SERVICING THE

●

CYLINDER HEADS

●

VALVE SYSTEMS

●

ROCKER ARMS

ON

CASE POWRDYNE SPARK IGNITION ENGINES

Rac.Form 9-76962

PRINTED IN U.S.A.

TABLE OF CONTENTS

CYLINDER HEAD AND COMPONENTS - Disassembly and Installation. L-2 thru L-5

ROCKER ARMS AND SHAFTS - Disassembly, Inspection and Assembly L-6

CYLINDER HEAD AND VALVES - Disassembly and Assembly L-8

EXHAUST VALVE ROTATORS L-8

VALVES, GUIDES AND SPRINGS - Inspection L-10

INTAKE AND EXHAUST VALVES - Refacing. L-12

INTAKE AND EXHAUST VALVE SEATS - Grinding L-13

LOCATING TOP DEAD CENTER AND TAPPET ADJUSTMENT L-14

CYLINDER HEAD AND COMPONENTS

(Refer to Figure L-1)

Removal

Steam clean the engine completely before doing any disassembly or service work.

Drain cooling system. Disconnect the fuel line, throttle and choke control at the carburetor. Remove the spark plug wires from each spark plug. Remove the intake, exhaust and water manifolds. Remove the rocker arm covers.

Remove the rocker arm assemblies and tag them for proper installation. (Refer to Page L-6).

Remove the push rods and tag or store them in a holder or rack so they can be installed in their same locations.

Remove the cylinder head bolts or nuts and lift the heads off the engine. Remove the head gaskets and discard them.

Inspection and Installation

Remove all carbon and clean all parts before installation.

STANDARD HEAD GASKETS

If you are installing the standard gasket, install the new gasket with new rubber seals. The gasket must be installed with either the copper side up or the side with the case part number up. Continued on Page L-5.

FIRE RING HEAD GASKETS

If you are installing the fire ring head gasket, inset B, cylinder sleeve protrusion must be checked to determine which fire ring to install. Only the standard fire ring is included in the valve grind gasket kit, however a thicker fire ring (.004") is available if the protrusion checks indicate a need for it. The thicker fire ring can be identified by a blue marking stripe.

Refer to Pages L-4 and L-5 for the procedure to follow when installing the fire ring cylinder head gasket.

REMOVAL AND INSTALLATION OF CYLINDER HEAD AND COMPONENTS

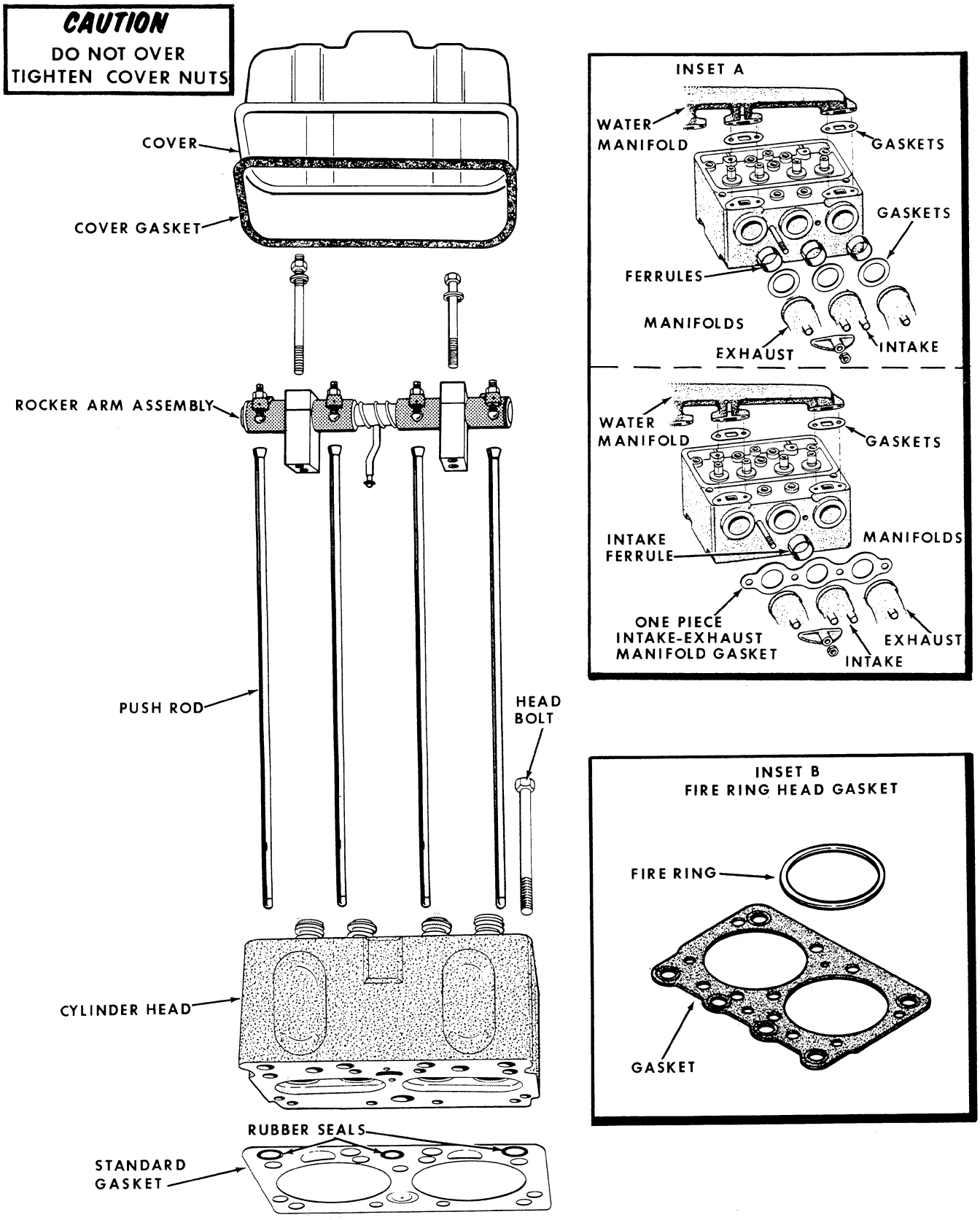

Figure L-1

Inspection and Installation Fire Ring Gaskets (Continued)

The following procedure must be followed when installing the fire ring head gasket:

1. Clean the top surface of the block and sleeve flange carefully. All traces of carbon and other deposits must be removed. During the final cleaning operation, the use of a rag dampened in solvent is recommended.

2. Using a small stone, remove any small burrs in the areas to be measured so that accurate readings can be obtained.

3. Using plate OTC970-12* from cylinder sleeve puller OTC970*, 010974AB ball and clamping bar, clamp the cylinder sleeve in place, Figure L-2. Torque the hold down capscrews evenly to 50 foot pounds. **NOTE** Refer to Figure L-2 for clamping bar dimensions.

*These tools are available through local Owatonna Tool Dealers or the Owatonna Tool Co., Owatonna, Minnesota.

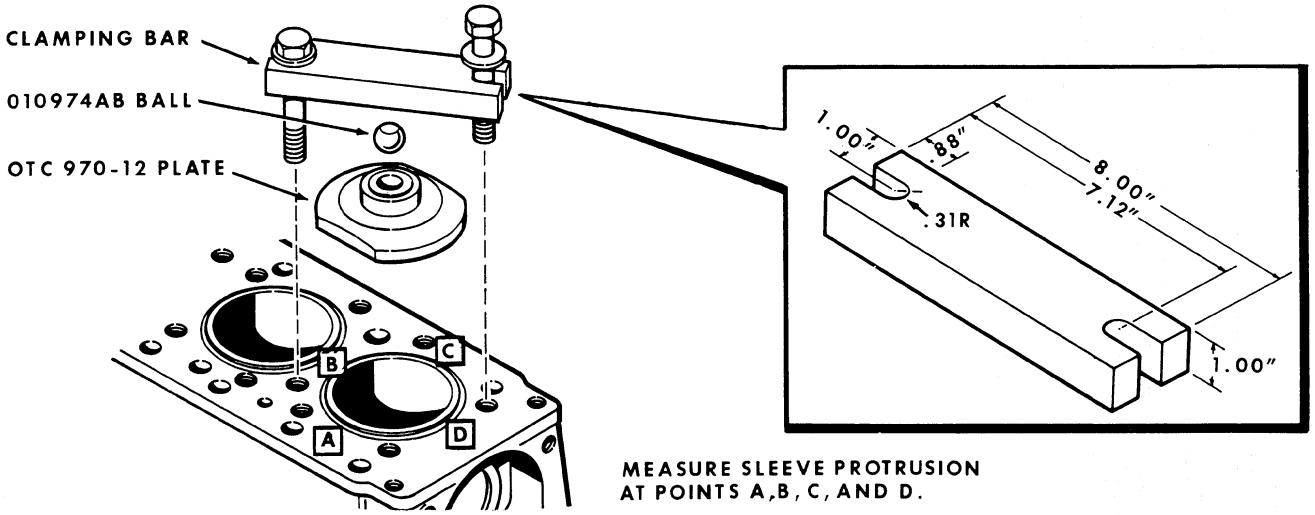

Figure L-2

4. Either a magnetic base dial indicator or a depth micrometer can now be used to determine the cylinder sleeve protrusion as indicated in Figure L-3. Refer to chart, Figure L-5, to make sure the correct fire ring is used.

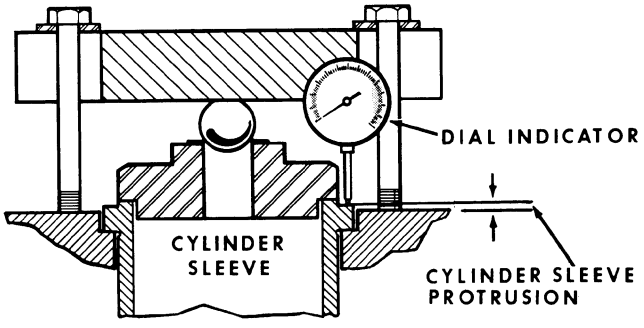

Figure L-3

5. Install cylinder head gaskets. **IMPORTANT** Two of the capscrew holes in the gasket are slightly smaller and act as guides to position the gasket as well as the fire ring, Figure L-4. Regular line-up studs could be used for most engines. In some instances it is very difficult to install the rear cylinder head due to the limited space in which to place the head when lowering it down over the long guide studs.

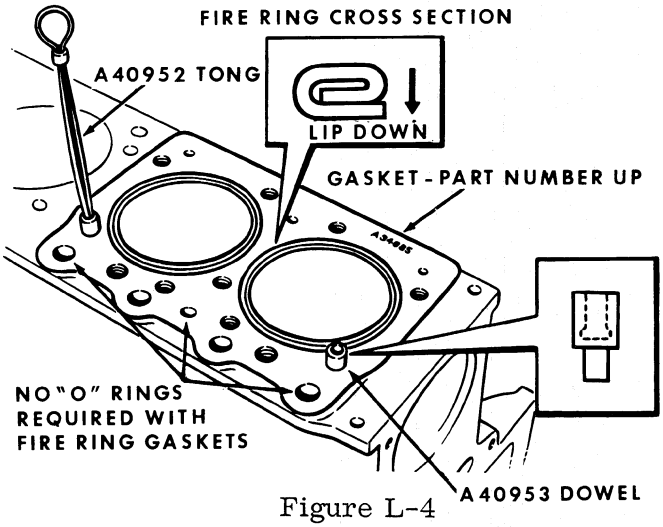

Figure L-4

CYLINDER SLEEVE PROTRUSION	USE STANDARD FIRE RING	USE OVERSIZE(THICKNESS) FIRE RING
BOTH SLEEVES UNDER ONE HEAD FLUSH TO .002"		X
BOTH SLEEVES UNDER ONE HEAD .002" OR OVER BUT LESS THAN .0025" BETWEEN SLEEVES	X	
BOTH SLEEVES UNDER ONE HEAD OVER .0025" DIFFERENCE BETWEEN SLEEVES	ON THE HIGH SLEEVE	ON THE LOW SLEEVE

Figure L-5

6. For difficult installations, the use of dowel pins and a tong are recommended and can be purchased through a local Snap-On Tool Dealer or J.I. Case Central Parts Dept. under the following part numbers.

Snap-On Tool No.	Case Part No.
CF83-1 Tong	A40952
CF83-4 Dowel	A40953

7. Install the fire rings with the lip downwards, Figure 4. **NOTE** Fire ring gaskets must be installed dry.

8. Carefully clean the cylinder heads as described in No. 1. If evidence of fretting or erosion exist in the area of the fire ring contact or if the head is warped more than .005", the head must be resurfaced.

9. Install cylinder heads and several bolts, then remove the A40953 dowels using A40952 tong and install all the bolts.

STANDARD AND FIRE RING HEAD GASKETS

10. Install intake and exhaust manifold ferrules and new gaskets. **NOTE** When the manifolds are designed for the one piece manifold gasket, the ferrules are used only in the intake ports. Refer to Page L-3, inset A. Install the intake and exhaust manifolds and torque to proper torque. Refer to Specification Section.

11. Torque cylinder head bolts or nuts to the proper sequence illustrated in Figure L-6. The three torquing steps recommended are 50 foot pounds, 100 foot pounds and finally 150 foot pounds.

12. Install the push rods in their original location. Reconnect the fuel line, throttle control and choke control. Reconnect the spark plug wires. Refer to Page L-14 for proper firing order.

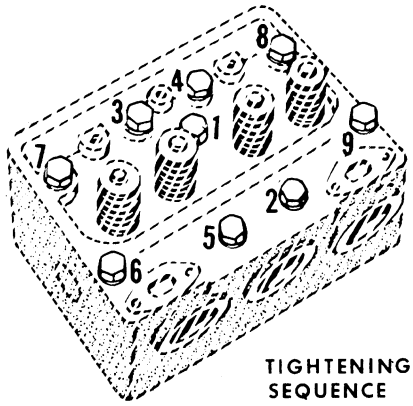

Figure L-6

13. Install the rocker arm assemblies in their original location.

14. Adjust the valve tappet clearance, refer to Page L-14.

15. Fill cooling system and start engine. Check that the rocker arms are receiving lubrication.

16. Run engine for approximately one (1) hour, under load if possible, to thoroughly warm up the engine and seat the head gaskets.

17. Stop the engine and retorque the cylinder head bolts or nuts to 150 foot pounds while the engine is still hot. Check and readjust the tappet.

18. Clean the rocker arm covers and remove the old gasket. Install new gaskets and seals; then install covers. Refer to Specification Section for proper torque. Do not over torque the valve cover nuts.

DISASSEMBLY OF THE ROCKER ARMS (Refer to Figure L-7)

Remove the rocker arm shaft bracket studs (15) and bolts (16). Remove and tag shaft assemblies for installation.

Unscrew the oil tube (1) and discard the "O" ring (2). Remove the snap rings (3), spacer washer (5) and keep count of the number of washers at each end of the shaft. Tag each rocker arm for original location. Remove the exhaust rocker arms (6) and the shaft brackets (7) from each end of the shaft.

Remove the intake rocker arms (8) and the shaft spring (9). In rocker shafts not reamed with stamped steel cup plugs, inset "C", remove the plugs (10) by using a rod and driving one plug clear thru the shaft. This will also clean out any sludge that has accumulated inside of the shaft. To remove cup plugs (10) in reamed rocker shafts, Inset "C" drill hole thru the plug and remove. Rocker shafts with aluminum type plugs, Inset "D" are permanent type. The plugs are not replaceable. Replacement shafts have these plugs installed at the factory.

Remove the push rods and store them in a rack or holder so they can be installed in their original location.

Remove the oil wick (11) from each exhaust rocker arm of the cast iron type and discard Remove the bushing (12) from the cast rocker. arm if it is worn using an Arbor (See Inset A).

INSPECTION (Refer to Figure L-7)

Inspect the shaft spring for proper tension and broken coils. Refer to "Specification" Section. Inspect the rocker arm shaft for excessive worn spots on the bottom side of the shaft. Replace shaft if worn condition exists.

Inspect the rocker arm bushings by installing each rocker arm on the shaft in its proper location. The rocker arm must be free on the shaft without any side "wobble". In the cast rocker arms if any is noted, replace the bushing. In the stamped rocker arms the bushing is not replaceable. Replacement rocker arms are purchased complete with bushings. Inspect the valve contact area on the rocker arm for wear. Replace if worn. Inspect the tappet adjusting screw for wear marks or pitting. Inspect the push rods for straightness, cracked or worn ends.

ASSEMBLY (Refer to Figure L-7)

Clean all parts thoroughly. Place new bushing on Arbor and press into the cast rocker arm so the bushing (12) is evenly centered in the rocker arm and the oil hole is lined up with the oil hole in the rocker arm, (See Inset A). Check the bushing for high or rough spots and if they exist, they should be honed out. Install new oil wick (11) in the cast iron exhaust rocker arm. Lubricate each part with engine oil as they are installed.

Install a shaft spring (9) and two intake rocker arms (8) on the shaft (4). When installing the cast rocker arms, the adjusting screw and the shaft oil hole must be on the same side. (See Inset A).

When installing the stamped steel rocker arms, the adjusting screw and the shaft oil hole must be on opposite sides (See inset B).

Install the shaft brackets (7) on the shaft with the split side toward the push rod side of the engine. Install the exhaust rocker arms (6) on the shaft. Install the same number of spacer washers (5) that were removed.

Install the snap rings (3) at each end of the shaft. Check the rocker arms for free movement. Install the oil tube (1) with new "O" ring (2). Install the push rods in their original location if they were removed. Install the adjusting screws (13) and lock nuts (14) if they were removed.

Install the rocker arm and shaft assembly on the cylinder head. Make sure all the push rods are engaged with the adjusting screws. Install the bracket studs (15) and bolts (16). Torque studs and bolts 54 to 64 foot pounds. Check that the oil tube is in the oil hole in the cylinder head. Check exhaust rocker arms for excessive end play. One or more spacer washers (5) can be used between the rocker arm (6) and snap ring (3) to remove the excessive end play. Check and adjust the tappet clearance. (Refer to Page L-14).

DISASSEMBLY AND ASSEMBLY OF THE ROCKER ARMS

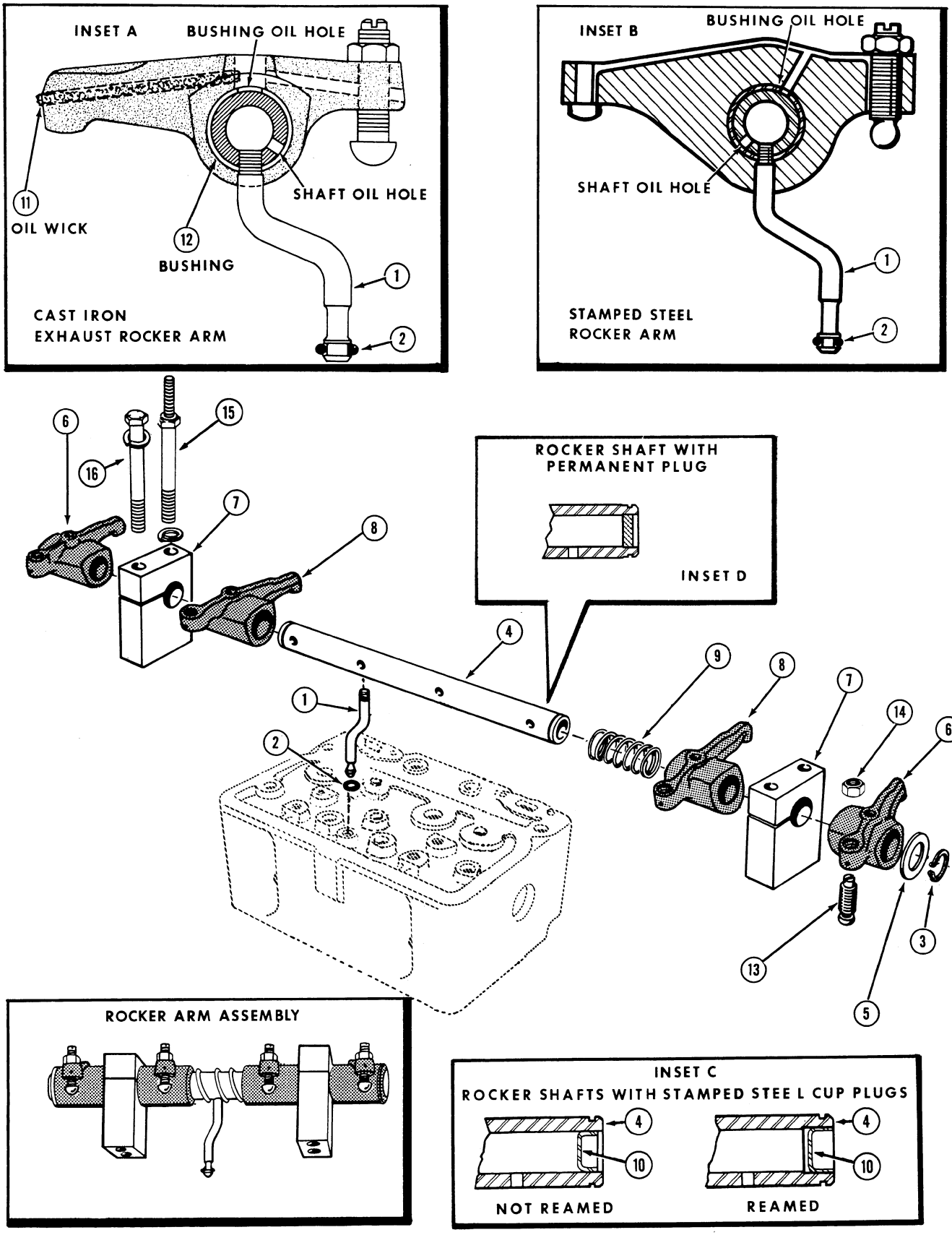

Figure L-7

DISASSEMBLY OF THE CYLINDER HEAD AND VALVES
(Refer to Figure L-8)

Using a valve spring compressor (Refer to Inset A) compress the spring (1). Remove the valve retainer locks (2) and the spring retainers (3) or valve rotators (4). Remove the valve springs (1), valve stem oil seal (5) and the valve spring seat. Remove any carbon from the valve stems before they are removed from the head.

Remove the intake valves (7) and the exhaust valves (8) from the head and store them in a rack or holder. Remove the intake valve guide (9) exhaust valve guide (10) down through head using an Arbor (See Inset B). Refer to "Specification" Section for dimension of valve guides. The exhaust valve seats (11) can be removed with a special seat removing tool (See Inset C).

NOTE Never attempt to remove a valve seat with a center punch, cold chisel or pry bar.

To remove the expansion plug (12) it must be drilled and then pryed out.

ASSEMBLY
(Refer to Figure L-8)

Clean head completely and check for cracks . Remove all carbon from the bore of the valve guides with a wire brush and blow out with compressed air.

Install new valve guides (9 and 10) using an Arbor (See Inset B) and press the guides into the head from the top of the head. The distance the guides must protrude above the head is given in the "Specification" Section.

To install new exhaust valve seats (11) clean the recess in the cylinder head. Place the valve seats in dry ice to shrink them for easy installation. Insert the valve seats in the head and drive them in place using suitable driver. Lubricate the valves (7 and 8) with engine oil and install them in the original location.

Install the valve spring seats (6), valve springs (1) and intake valve stem oil seal (5). Install the exhaust valve rotators (4) and the intake valve spring retainers (3). Compress the valve springs so the valve retainer locks (2) can be installed.

Install new expansion plug (12). Refer to Page L-2 for reinstalling the cylinder head.

EXHAUST VALVE ROTATOR
(If So Equipped)

(Refer to Figure L-8)

When re-installing the rocker arm assembly, check the operation of the exhaust valve rotators. To check the operation of the rotators, place a dab of white paint on the rotator - note its position; -- then start the engine and observe whether or not the rotator is turning. Replace any rotators that will not turn. Do not attempt repairs on rotators.

It is impossible to determine whether or not the rotator is turning without an identifying mark.

There is no set speed at which the rotators should turn; some rotators will turn faster than others. As long as the rotator is turning the valve, it is functioning properly.

NOTE

An excessive accumulation of deposits on the exhaust valve face and stem is also an indication that the rotators may not be functioning properly.

IMPORTANT

When installing valve rotators:

Reassemble the rotator with original valve as they tend to become matched parts when they wear in.

If it is necessary to install a new valve always install a new rotator and retaining lock.

DISASSEMBLY AND ASSEMBLY OF THE CYLINDER HEAD AND VALVES

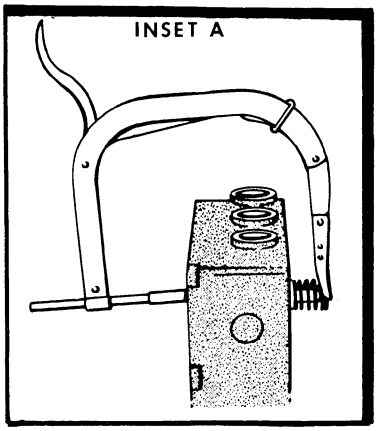

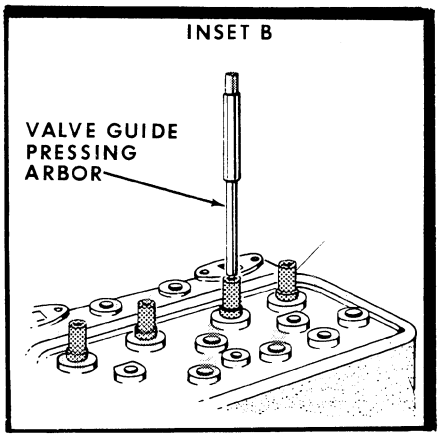

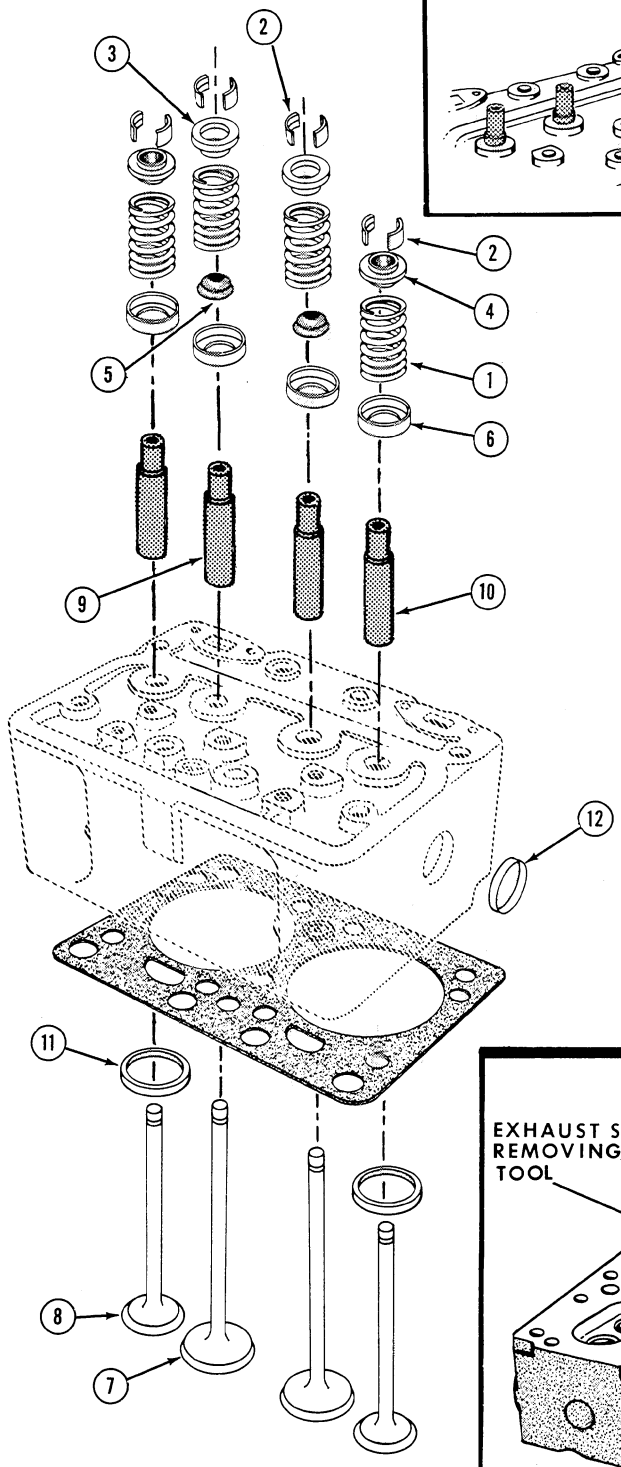

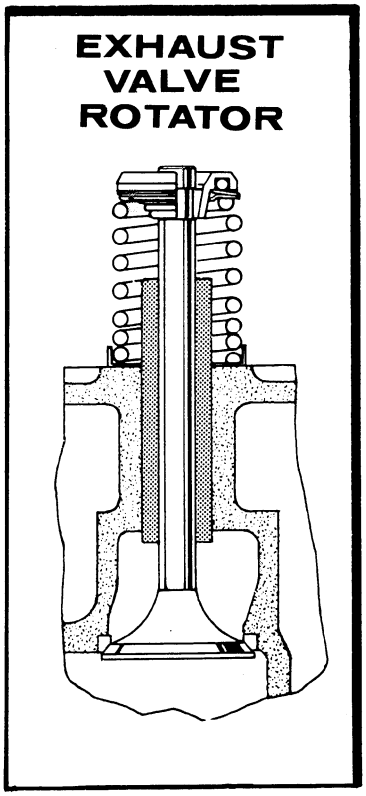

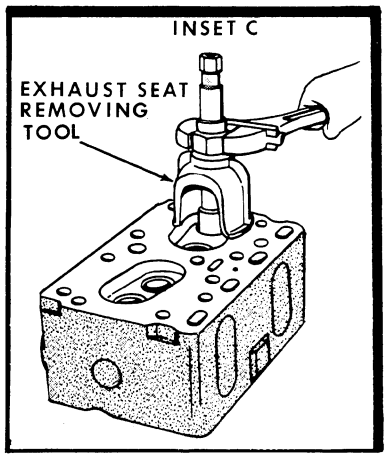

Figure L-8

INSPECTION OF THE VALVES,GUIDES AND SPRINGS

Valve springs should be checked for flat squared ends, broken or cracked coils and correct spring pressure. Use a Valve Spring Tension Tester. Refer to the "Specification" Section.

Valve guides can be checked for wear by using a bore gauge and micrometer. Refer to Figure L-10. The valve guide should be checked at the top, middle and bottom of the bore for wear. Refer to Figure L-9. The inside diameter wear limits of the valve guide should not exceed the specification given in the "Specification" Section, at any point along the bore of the guide. Replace guide if it does. Check the new valve guides after installation to make sure that the bore is not less than the inside diameter given in the "Specification Section. Using an Arbor equal to the inside diameter of the valve guide will keep the guide from collapsing when pressed in place.

Clean the valves with a power driven fine wire brush, being very careful not to scratch the valve stems. Reference is made to the different parts of the valve (Refer to Figure L-11).

Inspect the valves for excessive wear or necked stems (Refer to Figure L-12). This can be caused by lack of lubrication, plugged or dirty water passages or operating the engine under continuous overload at excessive engine RPM. Valves should be replaced.

Inspect the valves for deep grooves in the face. (Refer to Figure L-13). This can be caused by abrasives entering the engine through the intake system or not servicing the air cleaner regularly. A leaking valve cover gasket can also cause this condition. If grinding the valve face will not correct this condition, discard the valves.

Inspect the valve face and stem for rust or pitting (Refer to Figure L-14.) Rust or pitting can usually be removed by grinding the valve face. If rust or pitting on the valve stem exist the valve should be replaced. These conditions can be caused by using poor quality engine oil or fuel that doesn't meet the specification given in the Operator's Manual. Rust could be caused by improper storing of the engine.

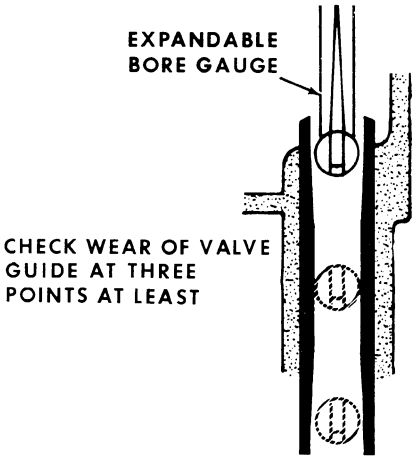

Figure L-9

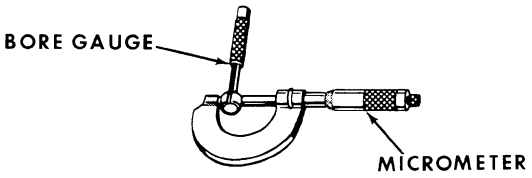

Figure L-10

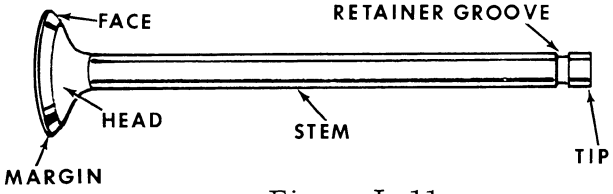

Figure L-11

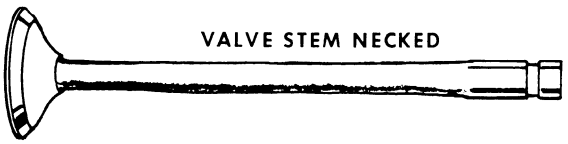

Figure L-12

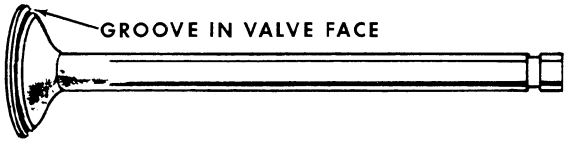

Figure L-13

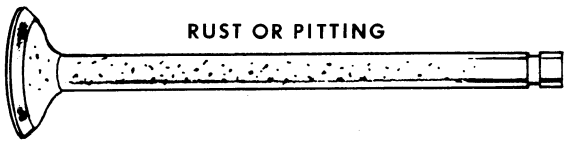

Figure L-14

INSPECTION OF THE VALVES,GUIDES AND SPRINGS (Contd)

Heavy carbon or varnish deposits on the valve (Refer to Figure L-15) should be removed before valves are ground. This condition is usually caused by worn piston rings and sleeves which allow too much oil to reach the combustion chamber. This condition could also be caused by worn valve guides or no seals on the intake valves. Low operating temperature is still another cause. These conditions should be corrected or the same trouble with the valves will happen again.

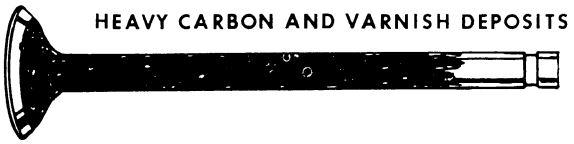

Figure L-15

Inspect the valve head for dishing and the valve face for deep burned spots, Figure L-16. These conditions can't be corrected by grinding the valves. The valves should be replaced. These conditions are usually caused by running the engine under excessive load at high engine temperatures.

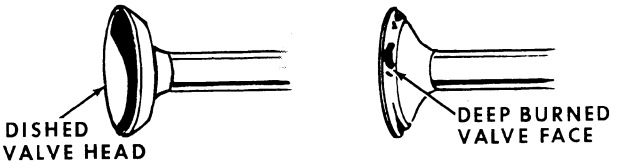

Figure L-16

Valves with worn keeper grooves or the stem is worn or dished beyond the chamfer must be replaced (Refer to Figure L-17).



Figure L-17

The checking of the valve stem diameter can best be done with a good accurate micrometer (Refer to Figure L-18). The valve stem should not vary more than the wear limits given in the "Specification" Section at any point on the valve stem. If this condition exists the valves must be replaced.

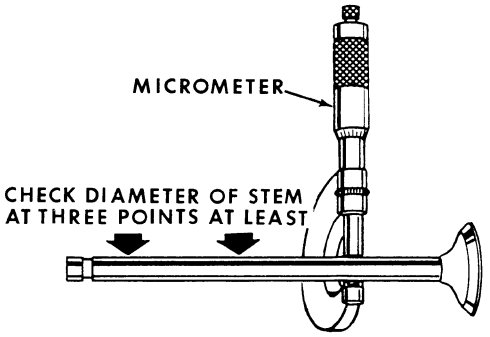

Figure L-18

The checking of the valve face runout should be done after the valves have been ground. A Vee block type holder with a dial indicator (Refer to Figure L-19) should be used to check the valve face runout. The valve face should not vary more than the specification given in the "Specification" Section. The valve stem runout can also be checked with this Vee block and dial indicator.

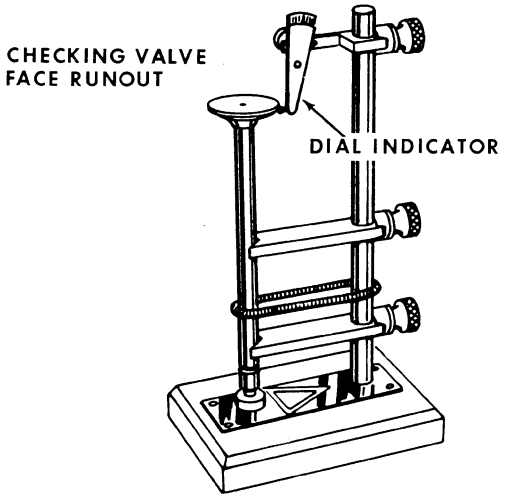

Figure L-19

IMPORTANT

Small amounts of very fine pitting, Figure L-20, may be found on the surfaces of the valve faces and seats after the valves are cleaned. These are normal and will not affect engine performance. This fine pitting is caused by a normal oxidation process and can happen on any engine during the run-in period. It is not necessary to grind valves or seats if this fine pitting is found as the pitting will generally reoccur after the engine is run for a few hours.



Figure L-20

REFACING INTAKE AND EXHAUST VALVES

Before refacing the valves they should be wire brushed, cleaned and inspected. Refer to the "Specification" Section for the correct valve face grinding angle. Set the refacing machine protractor at this angle. Be sure the chuck of the machine is clean before installing valve. Dress the grinding wheel before starting to reface each valve. Take only light cuts as the valve is refaced and the last cut must be very fine so the valve face will have a polished finish.

IMPORTANT Replace any valve that after grinding has a thin edge or margin (Refer to Figure L-21). If the margin on the ground valve is less than half the margin on a new valve replace the valve.

The tip end of the valve should be checked for roughness or wear. Usually this can be removed with some very light cuts against the side of the grinding wheel and will square up the end. Any excessive grinding should not be done to the stem end. Replace the valve.

Before installing new valves a fine finish grinding should be done to each new valve. Check the valve face and valve stem runout before installing (Refer to Page L-11).

The valve face and seat contact location should be checked. Place valve bluing (Prussion Blue) on the face of the valve. Install the valve in the head and rotate the valve on its seat. Remove the valve and inspect the contact area on the valve face. The bluing will have been removed from the valve face evenly at the top edge of the contact area (Refer to Figure L-22). This is due to the fact that the valve face and seat are ground with 1° INTERFERENCE ANGLE. Refer to "Specification" Section.

When the top edge of the contact area is too high or low on the valve face, the seat contact area must be moved. This is done by using the narrowing stones (Refer to Page L-13). The contact area width should never exceed the dimension given in the "Specification" Section.

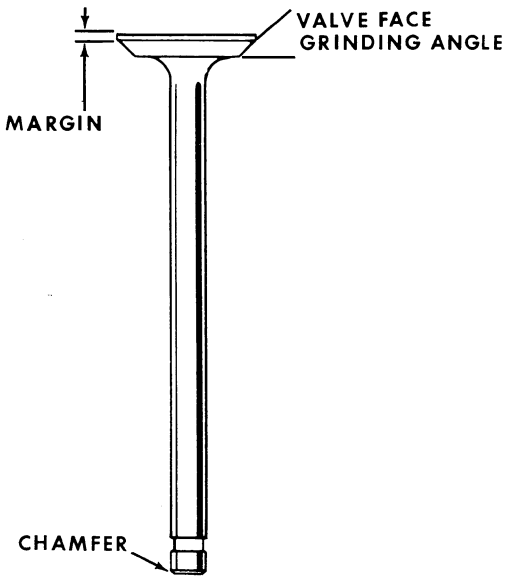

Figure L-21

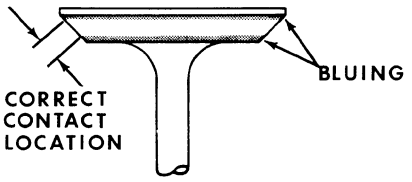

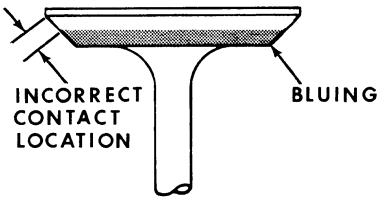

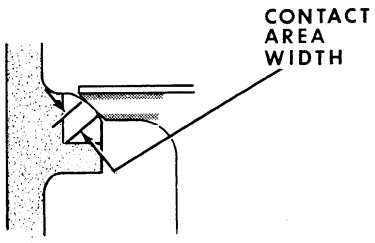

Figure L-22

CAUTION DO NOT USE BLUING TO CHECK VALVE SEAT AND VALVE FACE RUN-OUT. The valve face could be contacting the seat at only a few points, but the bluing would still be rubbed off by the high points and make it appear as though you had solid contact all around. The only thing bluing will indicate is the location on the valve face where the seat is contacting --no more!

GRINDING INTAKE AND EXHAUST VALVE SEATS

Always use a precision type power seat grinder similar to the one shown in Figure L-23. The valve seats can not be ground with manual operated equipment. The intake valve seat is part of the head and for this reason only a finishing stone should be used to grind the seat. The exhaust valve seat should be first ground with a roughing stone and then use a finishing stone. Take very light cuts with the grinding stones so just enough metal is removed to end up with a good smooth seat finish.

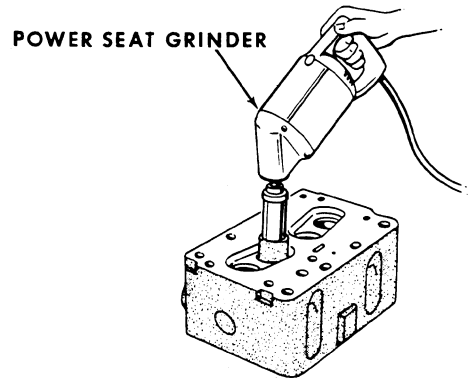

Figure L-23

Refer to the "Specification" Section for the proper specifications of the intake, exhaust seats and valve guides (Refer to Figure L-24). From the specifications the proper grinding stones and pilot can be chosen.

When using the grinding stones the seat grinding angle of the stone should be dressed on a (stone dresser) frequently so the seat angle will not vary when grinding the seats.

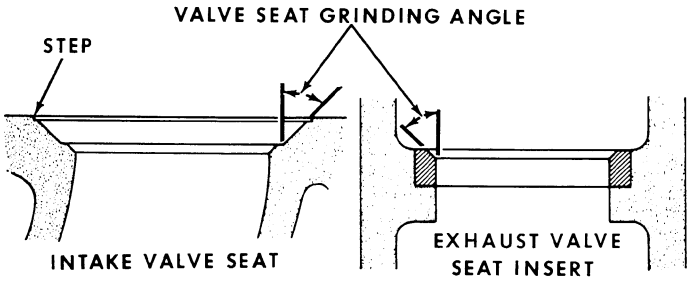

Figure L-24

INSPECTION

The valve seat runout should be checked after finish grinding with a dial indicator and seat grinding pilot. (Refer to Figure L-25). After checking the runout, turn the pilot 1/4 turn and check runout again. The width of the valve seat contact area must also be checked. Refer to "Specification" Section for dimension of seat width contact area.

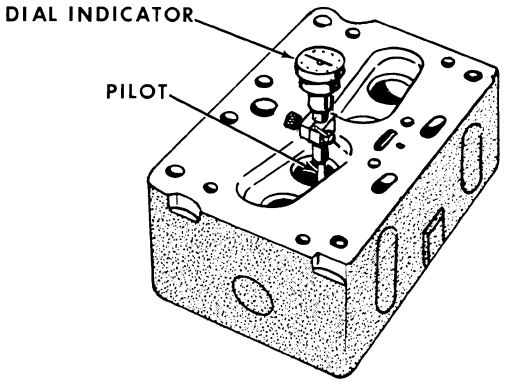

Figure L-25

The valve seat contact area width should never vary from this dimension. The exhaust valve seat contact area width and location can be changed by using the 30° and 60° narrowing stone (Refer to Figure L-26).

CAUTION The intake valve seat should not be changed by using the narrowing stones. If the seat width exceeds the dimension given in the "Specification" Section, the cylinder head should be replaced.

When the step above the intake seat (Refer to Figure L-24) has been reduced by the grinding operation, installing a new valve will help to restore the compression that would normally be lost by excessive grinding of the seat and valves. Excessive grinding of the valves and seats moves the valves further into the head thereby reducing the compression ratio.

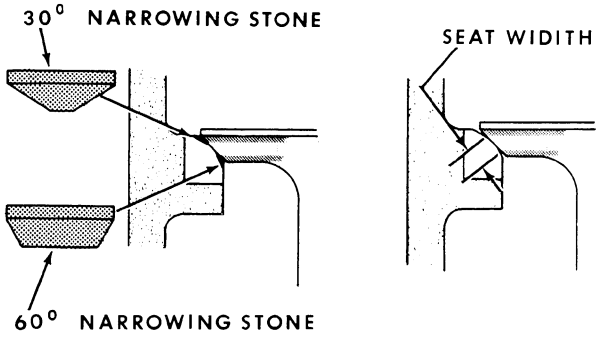

Figure L-26

LOCATING TOP DEAD CENTER AND TAPPET ADJUSTMENT

Refer to "Specification Section" for the correct tappet clearance.

The two valve tappets for each cylinder are to be checked and adjusted when the piston for that particular cylinder is at top dead center on the compression stroke. Start with the number 1 cylinder (nearest the radiator) and follow the sequence of firing order.

4 Cylinder

Firing Order ---------- 1-3-4-2

The top dead center position of the pistons for checking valve clearance is indicated by marks on the crankshaft pulley flange. The 4 cylinder engines use the marks 180°apart, Figure L-27.

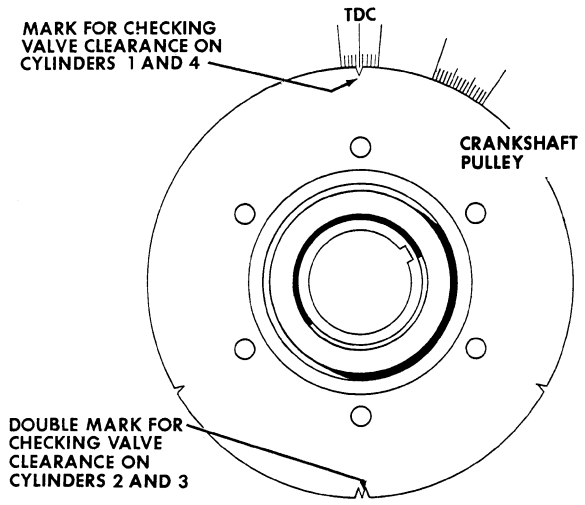

Figure L-27

NUMBER 1 CYLINDER

To set No. 1 cylinder on top of compression stroke remove the valve covers and crank engine until the push rods are loose on No.1 cylinder (top of compression stroke) and the rocker arms on the opposing cylinder No. 4 can be rocked open or closed with a slight back and forth movement of the crankshaft. Then check and adjust the valve tappets on No. 1 cylinder, refer to Figure L-28.

NUMBER 3 CYLINDER

Crank the engine approximately 1/2 turn or until the push rods on No. 3 cylinder are loose and the rocker arms on the opposing cylinder No. 2 can be rocked open or closed slightly by crank movement. Adjust tappets on No. 3 cylinder.

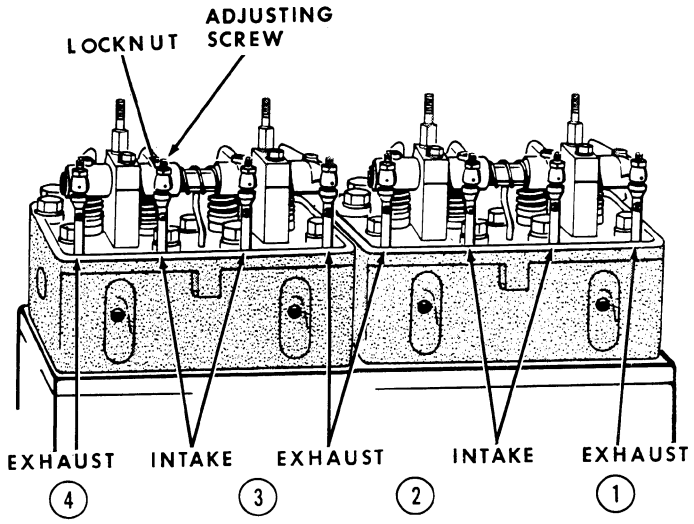

Figure L-28

NUMBER 4 CYLINDER

Crank engine another 1/2 revolution or until the push rods on No. 4 cylinder are loose and the rocker arms on No. 1 can be rocked open or closed slightly by crank movement. Adjust tappets on No. 4 cylinder.

NUMBER 2 CYLINDER

Crank engine another 1/2 revolution or until the push rods on No. 2 cylinder are loose and the rocker arms on No. 3 can be rocked open or closed slightly by crank movement. Adjust tappets on No. 2 cylinder.

While the valve covers are removed, start the engine and check that the rocker arm assemblies are receiving proper lubrication; then install new valve cover gaskets and replace valve covers properly to prevent oil leaks.

LOCATING TOP DEAD CENTER AND TAPPET ADJUSTMENT

6 Cylinder

Firing Order ---------- 1-5-3-6-2-4

The top dead center position of Nos. 1 and 6 cylinders is indicated by the TDC mark on the crankshaft pulley flange.

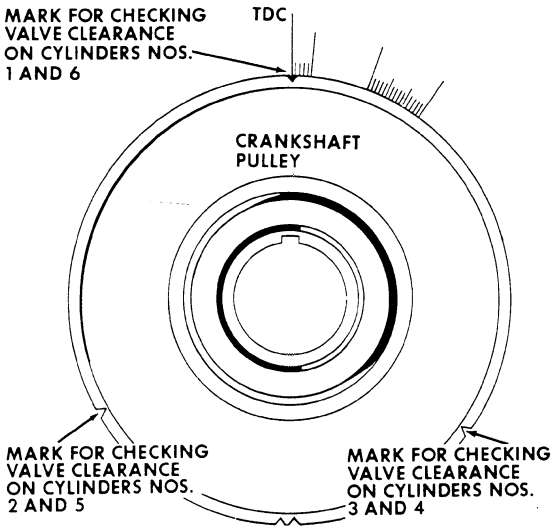

Figure L-29

NUMBER 1 CYLINDER

To set No. 1 cylinder on top of compression stroke, remove the valve covers and crank engine until the push rods are loose on No. 1 cylinder (top of compression stroke) and the rocker arms on the opposing cylinder No. 6 can be rocked open or closed with a slight movement of the crankshaft. Then crank and adjust the valve tappets on No. 1 cylinder, refer to Figure L-30.

NUMBER 5 CYLINDER

Crank the engine approximately 1/3 turn or until the push rods on No. 5 are loose and the rocker arms on No. 2 can be rocked open or closed slightly by crank movement. Adjust tappets on No. 5 cylinder.

NUMBER 3 CYLINDER

Crank engine another 1/3 revolution or until the push rods on No. 3 cylinder are loose and the rocker arms on No. 4 can be rocked open or closed slightly by crank movement. Adjust tappets on No. 3 cylinder.

NUMBER 6 CYLINDER

Crank engine another 1/3 (TDC mark) revolution or until the push rods on No. 6 are loose and the rocker arms on No. 1 can be rocked open or closed slightly by crank movement. Adjust tappets on No. 6 cylinder.

NUMBER 2 CYLINDER

Crank engine another 1/3 revolution or until the push rods on No. 2 cylinder are loose and the rocker arms on No. 5 can be rocked open or closed slightly by crank movement. Adjust the tappets on No. 2 cylinder.

NUMBER 4 CYLINDER

Crank engine another 1/3 revolution or until the push rods on No. 4 cylinder are loose and the rocker arms on No. 3 can be rocked open or closed slightly by crank movement. Adjust the tappets on No. 4 cylinder.

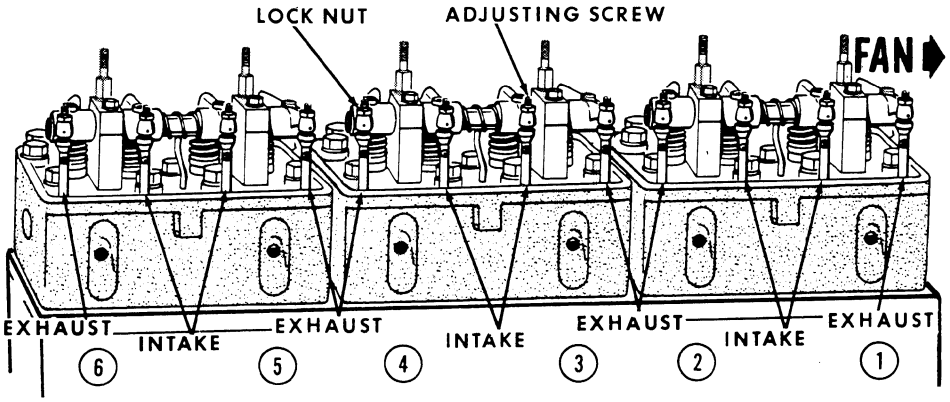

Figure L-30

NOTE The CASE CORPORATION **reserves the right to make improvements in design or changes in specifications at any time without incurring any obligation to install them on units previously sold.**

SECTION

M

SERVICING THE ASSEMBLIES CONTAINED IN THE ENGINE BLOCK

Rac. Form 9-75222

PRINTED IN U.S.A.

TABLE OF CONTENTS

ENGINE LUBRICATING SYSTEM . . . . . M-4 thru M-13

Engine Lubricating System Diagrams . . . . . M-4 thru M-7; M-12 and M-13

Oil Pan Removal M-8

Oil Pan Installation M-8

Oil Pump Removal M-8
Disassembly M-8
Inspection M-10
Assembly M-10
Installation M-10

Adjusting Oil Pump Pressure Relief Valve M-10

CHECKING COMPRESSION PRESSURE (Diesel) M-14

CHECKING COMPRESSION PRESSURE (Spark Ignition) M-15

PISTONS, CONNECTING RODS, CYLINDER SLEEVES . . . . . M-16 thru M-29

Removal and Disassembly M-16

Inspection . . . . . M-16 thru M-23
Connecting Rods M-16
Pistons M-16
Piston Pins M-18
Bearing Caps and Liners M-18
Cylinder Sleeves . . . . . M-19 thru M-21
Piston Clearances . . . . . M-22 and M-23

Assembly and Installation . . . . . M-24 thru M-29
Cylinder Sleeves M-24
Piston Pin and Bushing M-24
Checking Ring End Gap M-26
Compression Rings M-26
Oil Rings M-27
Pistons and Connecting Rods M-28

CRANKSHAFT, MAIN BEARINGS, FLYWHEEL . . . . . M-30 thru M-37

Removal and Disassembly M-30

Inspection . . . . . M-30 thru M-33
Crankshaft M-30
Main Bearings . . . . . M-32 and M-33

Assembly and Installation . . . . . M-34 thru M-37
Checking Flywheel Housing Alignment M-36

TABLE OF CONTENTS (CONT'D)

CAMSHAFT, BUSHINGS AND PUSH ROD LIFTERS . . . . . M-38 thru M-41

Removal and Disassembly M-38

Inspection M-38

Assembly and Installation M-40
Checking Timing Gear Backlash M-40

FUEL INJECTION PUMP DRIVE . . . . . M-42 thru M-44

Removal and Disassembly M-42

Inspection M-42

Assembly and Installation M-44

CHECKING TIMING POINTER ACCURACY M-44

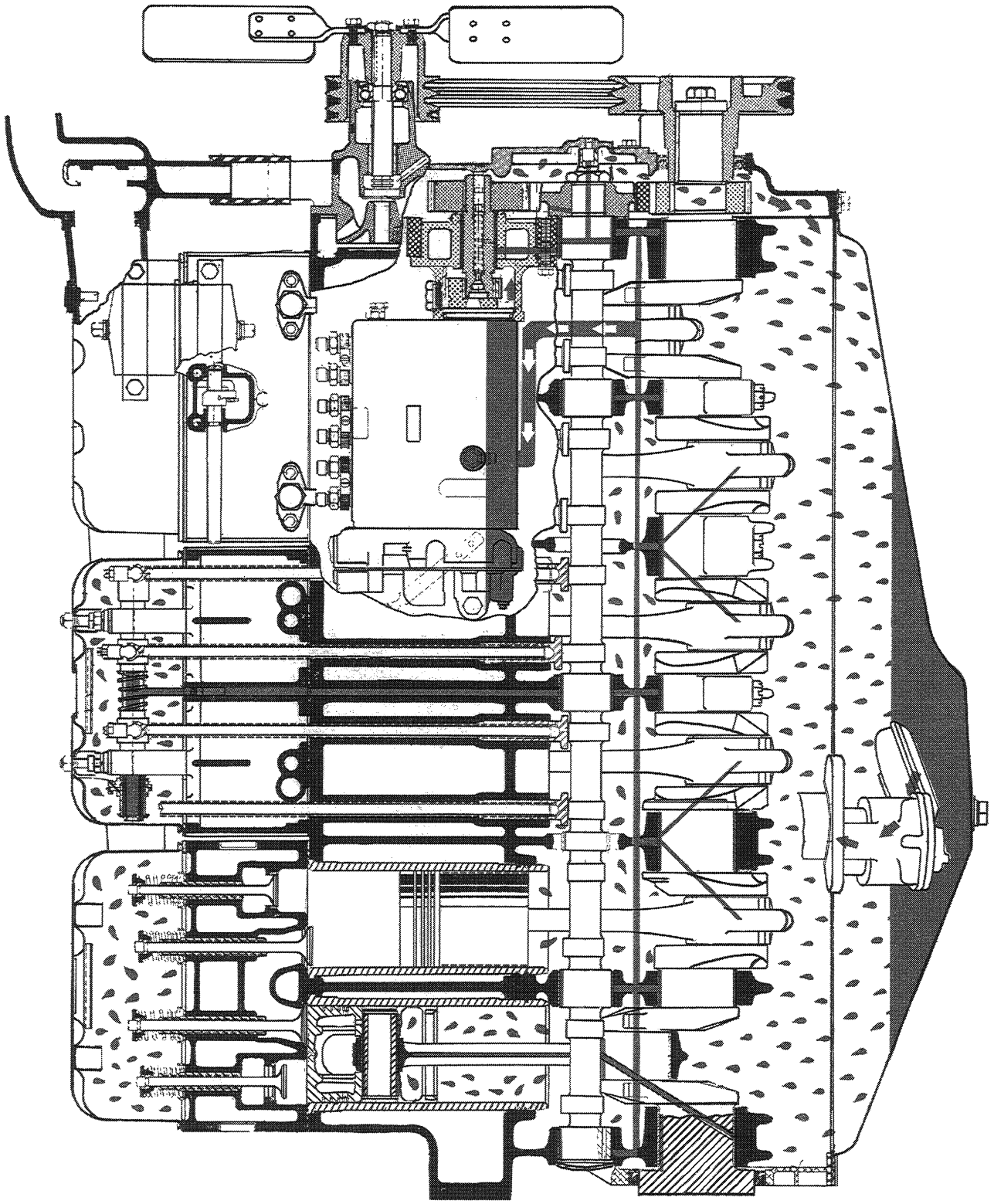

Figure M-1. Typical Example of Case Diesel Engine Pressure and Spray Lubricating System

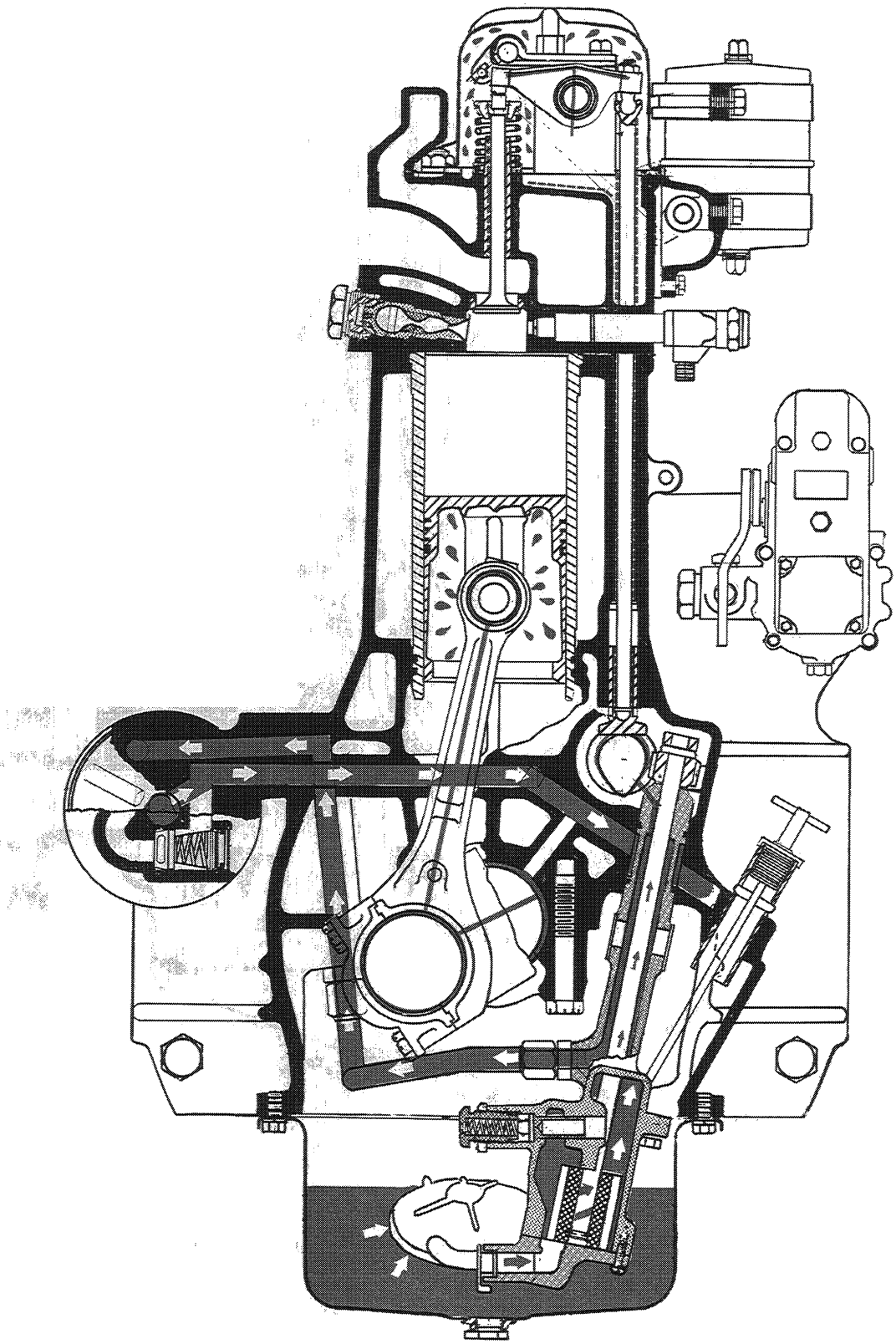

Figure M-2. Typical Example of Case Diesel Engine Pressure and Spray Lubricating System

CASE SPARK IGNITION ENGINE

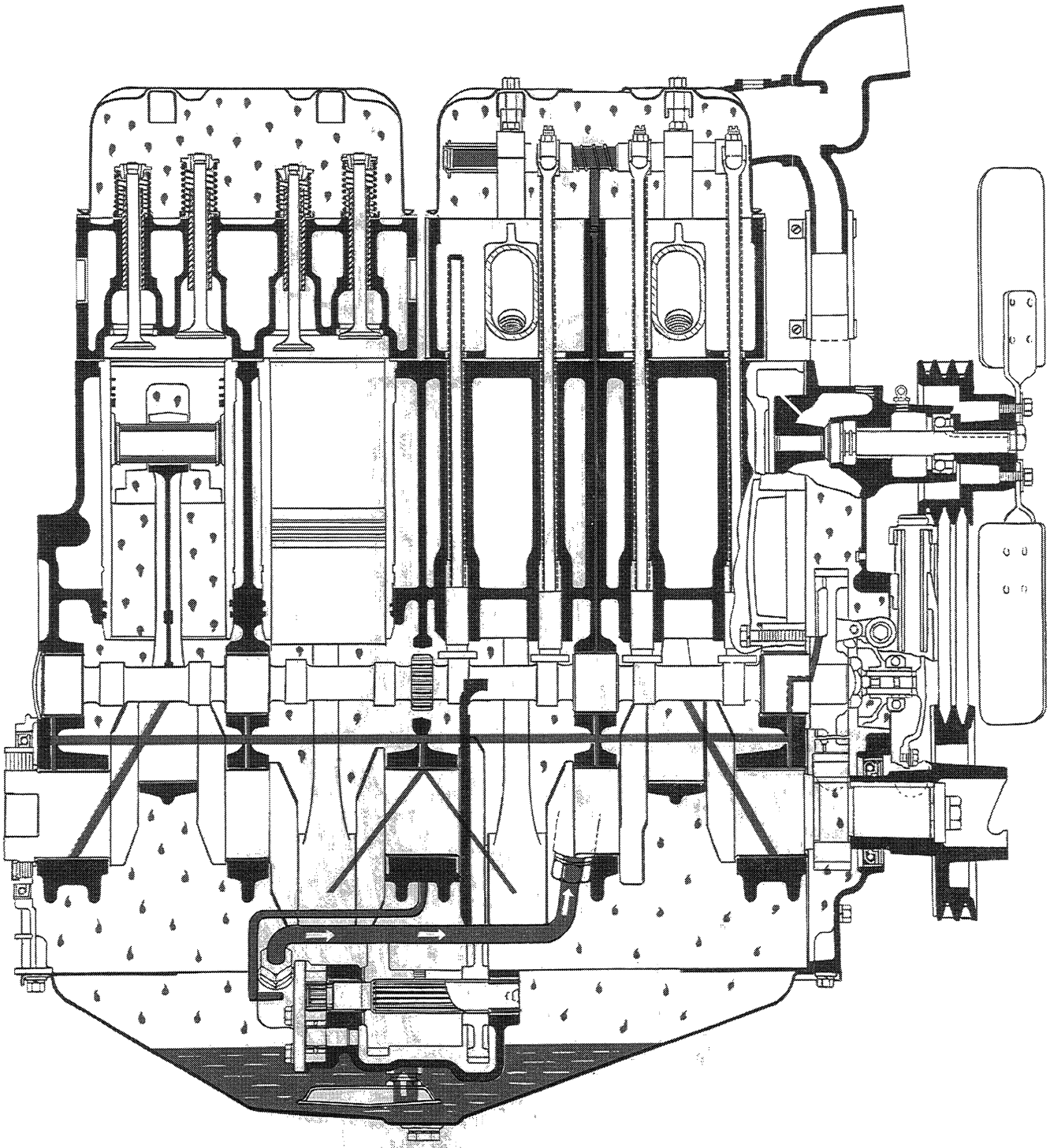

Figure M-3

Typical Example of Case Spark Ignition Engine Pressure and Spray Lubricating System

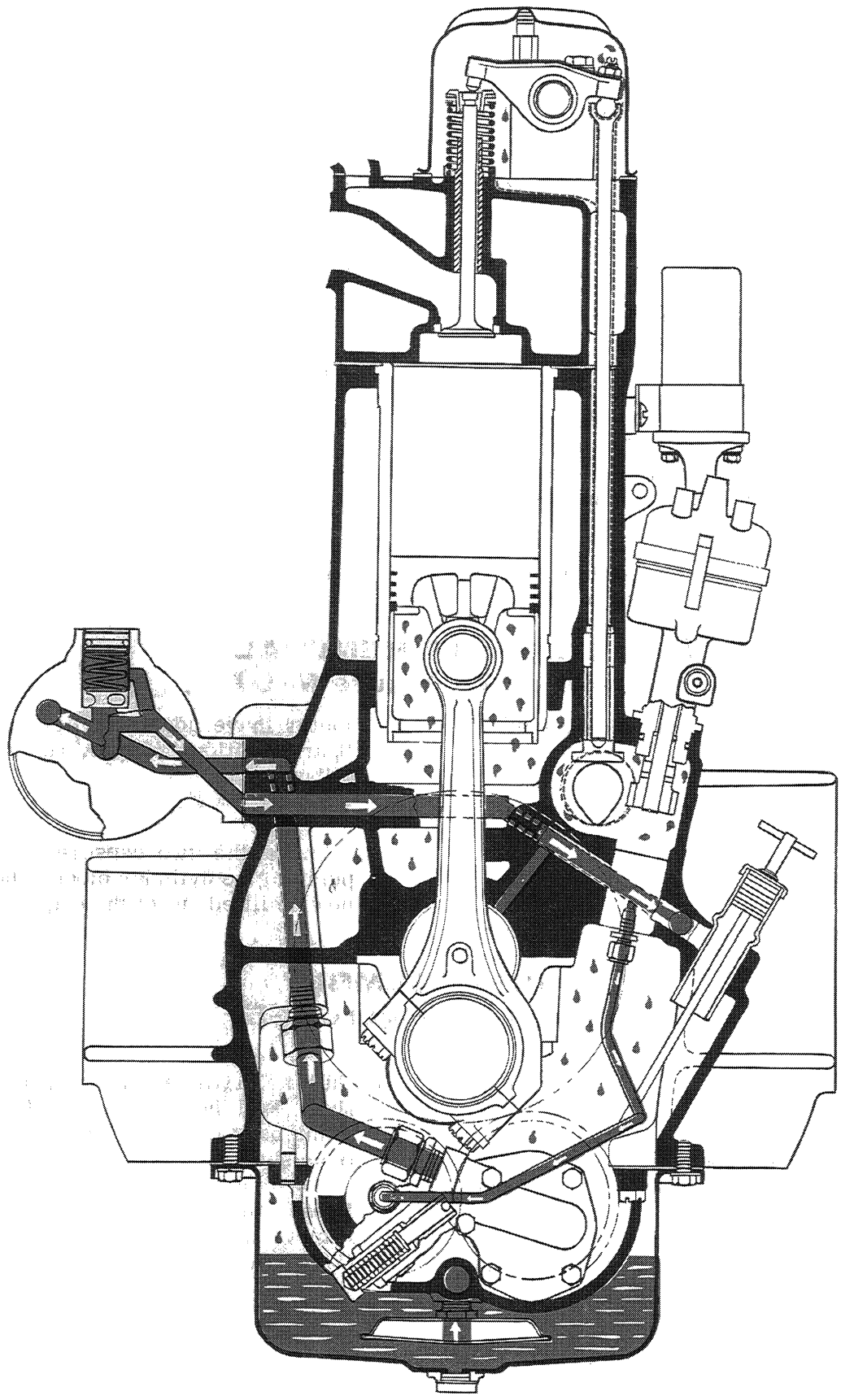

Figure M-4

Typical Example of Case Spark Ignition Engine Pressure and Spray Lubricating System

OIL PAN REMOVAL

1. Drain the crankcase.
2. Remove the oil pan capscrews.
3. Drop the oil pan.
4. Remove the old oil pan gasket from cylinder block and oil pan.

OIL PAN INSTALLATION

1. Always install new oil pan gaskets.
2. Cement the new gaskets on the oil pan using Permatex or equivalent.
3. "Snug up" (but do not tighten) the rear capscrews first to draw the pan into position at the rear and obtain a good seal. Then "snug up" the rest of the capscrews.
4. Tighten all the capscrews evenly. Refer to "Specifications" Section for torque.
5. Refill crankcase with correct viscosity oil.

NOTE

When installing oil pan, always push pan toward the rear to insure a seal at the rear corners.

IMPORTANT

Check oil pan frequently for leakage during first hours of operation.

OIL PUMP REMOVAL (Refer to Figure M-5)

1. Drain the crankcase and remove the oil pan.
2. Remove the line from the oil pump to the full flow filter.
3. On Diesel Engines, remove the tachrometer drive adapter (7) and plug (6). On Spark Ignition Engines, remove the distributor.
4. Remove the two capscrews holding the pump to the cylinder block. The pump can now be lifted out of the engine.

DISASSEMBLY (Refer to Figure M-5)

1. Remove the cotter pin (20) and lift off screen (21).
2. Remove the pump body cover (22). No gasket is necessary since the cover is ground-lapped fit to the body.
3. Remove the pump idler gear (1) (without keyway) from the stub shaft (2).
4. Drive out the drive gear roll pin (9) and remove gear (10) and thrust washer (11) from the shaft (5).
5. Pull the drive gear (19) (with keyway) from shaft. Pull the shaft (5) from the cover end of the body (13) and remove snap ring (3) from shaft.
6. Loosen the relief valve locknut (16) and remove the adjusting screw (15), spring (17) and valve (18).
7. Remove and discard the "O" rings (12) from the body (13).

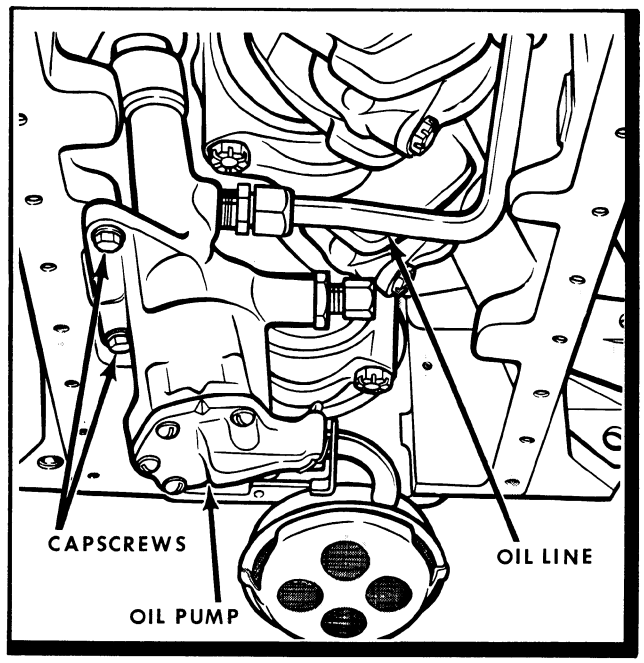
CAPSCREWS
OIL LINE
OIL PUMP

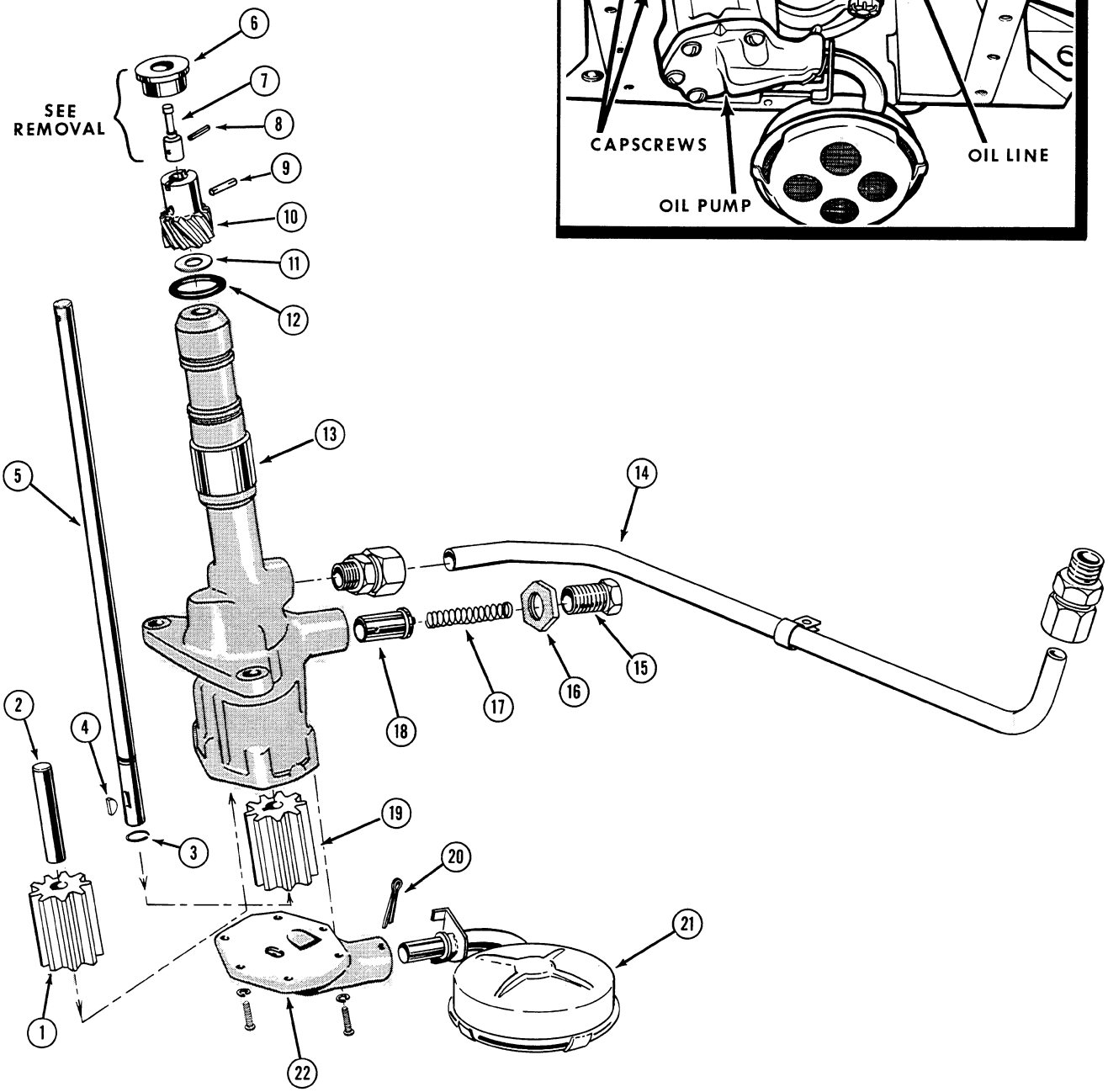
SEE REMOVAL
1
2
3
4
5
6
7
8
9
10
11
12
13
14
15
16
17
18
19
20
21
22

Figure M-5

INSPECTION
(Refer to Figure M-6)

With the oil pump disassembled, the component parts can easily be cleaned and inspected for wear, scratches or cracks. Any parts that are worn or damaged must be replaced. All "O" rings must be replaced.

PUMP BODY - Check for leakage at both ends of sleeve that is pressed on pump body. If there is leakage around the sleeve, the sleeve can be soldered at both ends. Remove the flashing after the sleeve has been soldered. Inspect the valve body recess for scoring, pitting or gouges. If the recess is damaged, replace the complete body.

PUMP BODY COVER - Inspect the cover for excessive wear from the gears. If excessive wear is found, replace cover.

DRIVE SHAFT - Replace drive shaft if there is evidence of wear on bearing surfaces - make sure shaft is straight.

GEARS - Inspect the drive and driven gear carefully for chipped or cracked teeth. If they are damaged, replace them. Check the small gear that contacts the camshaft. If it is worn or damaged, check the camshaft also. Replace damaged parts.

ASSEMBLY
(Refer to Figure M-6)

1. Install the relief valve (18), spring (17), locknut (16) and adjusting screw (15). See Adjustment of Relief Valve below.
2. Install drive shaft (5) with snap ring (3) in pump and install thrust washer (11), pump gear (10) and roll pin (9).
3. Install new "O" rings (12) in the pump body grooves.
4. Install key (4) oil pump gear(with keyway) (19), oil pump driven gear (1) and stub shaft (2) (without keyway).
5. Install oil pump cover (22) and tighten screws.
6. Install screen (21) with cotter pin (20).

INSTALLATION

Install oil pump and reconnect the oil line (14). Install the tachometer drive adapter (7) and plug (6). ***NOTE*** The drive adapter can only be installed one way because the roll pin is off center and the groove in the oil pump drive is off center. Refer to Group I Electrical System for installation of the distributor.

ADJUSTING OIL PUMP PRESSURE RELIEF VALVE
(Refer to Figure M-6,INSET A)

Replacement oil pumps have the pressure relief valve adjusted at the factory. It should not be necessary to disturb this adjustment.

ONE COMPLETE TURN OF THE RELIEF VALVE ADJUSTING SCREW WILL MAKE A DIFFERENCE OF APPROXIMATELY 2 POUNDS PER SQUARE INCH OIL PRESSURE.

1. Turn the screw in until the underside of the head is 3/4 inch from the boss on the pump body. See inset A. Tighten the locknut and install pump.
2. Install oil pan, refill crankcase and start engine. Check oil pressure gauge reading. See "Specification" Section. If the pressure is low turn adjusting screw in. If the pressure is high, turn the adjusting screw out.

IMPORTANT

IF THE PRESSURE DOES NOT INCREASE WHEN THE RELIEF VALVE PRESSURE IS INCREASED, CHECK THE ENGINE FOR CAUSE OF PRESSURE LOSS.

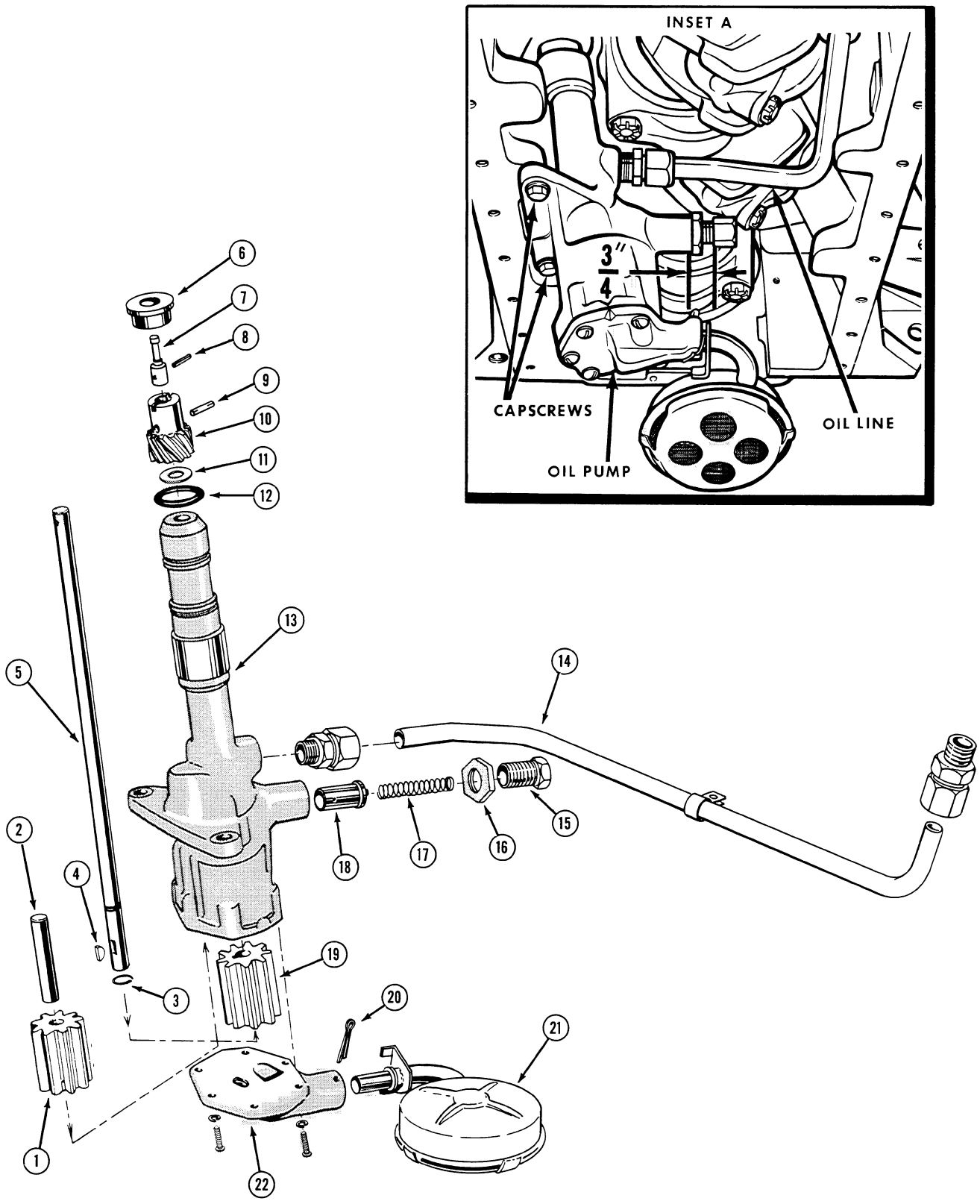
INSET A
3/4"
CAPSCREWS
OIL PUMP
OIL LINE
1
2
3
4
5
6
7
8
9
10
11
12
13
14
15
16
17
18
19
20
21
22

Figure M-6

CRANKCASE OIL FILTER AND OIL COOLER

ON ENGINES NOT EQUIPPED WITH OIL COOLERS THE OIL FLOW THROUGH THE FILTER ELEMENT AND RELIEF VALVE IS BASICALLY THE SAME AS ILLUSTRATED ON PAGES M-12 AND M-13

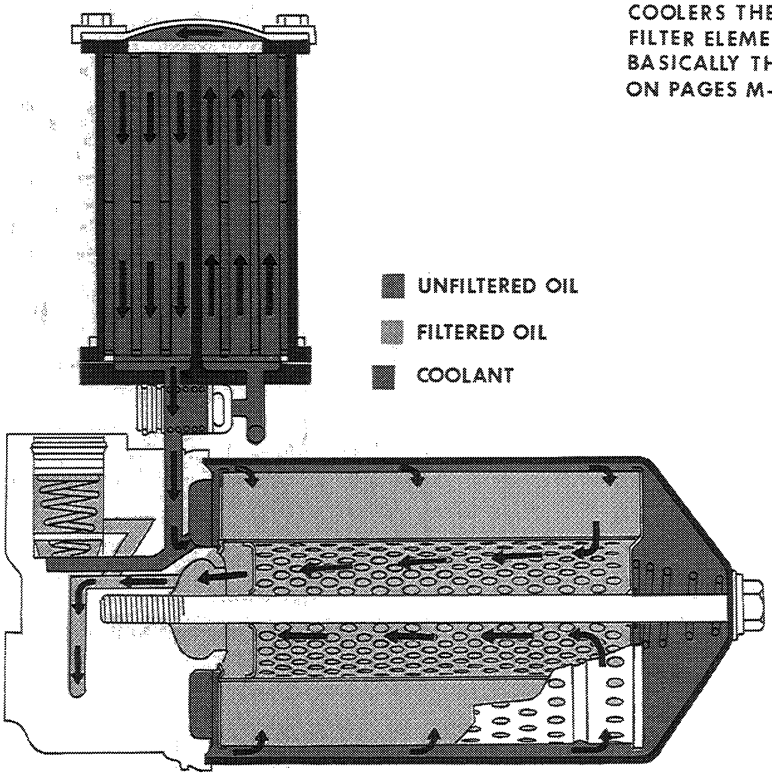

Figure M-7. Normal Oil Flow

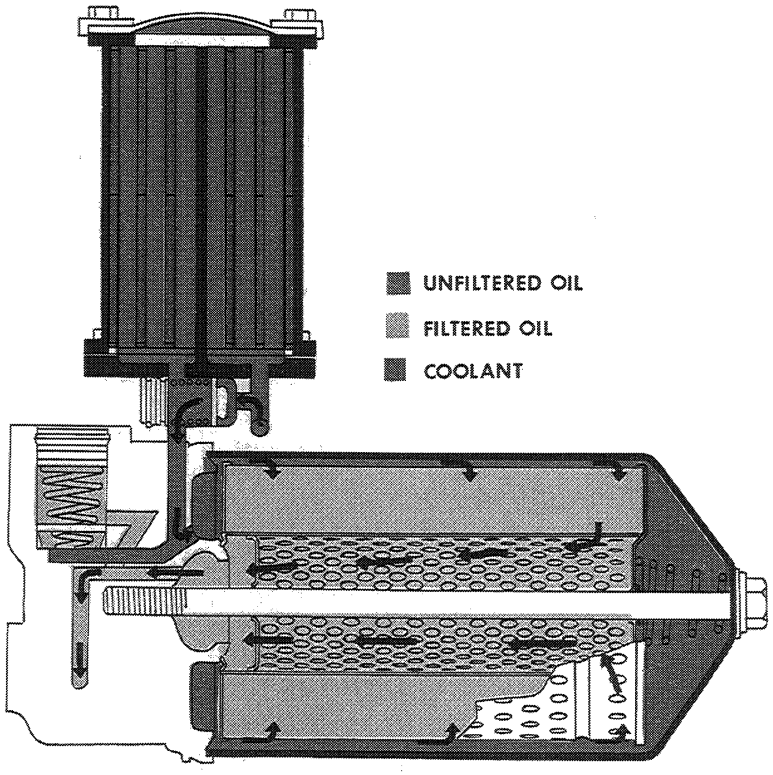

Figure M-8. Oil Flow With Plugged Oil Cooler

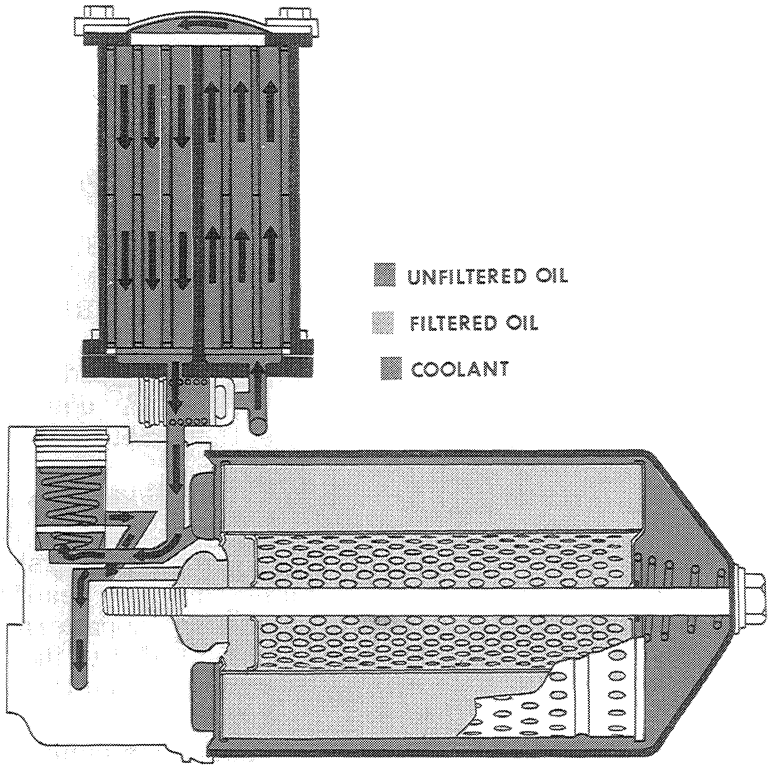

Figure M-9. Oil Flow With Plugged Filter Element

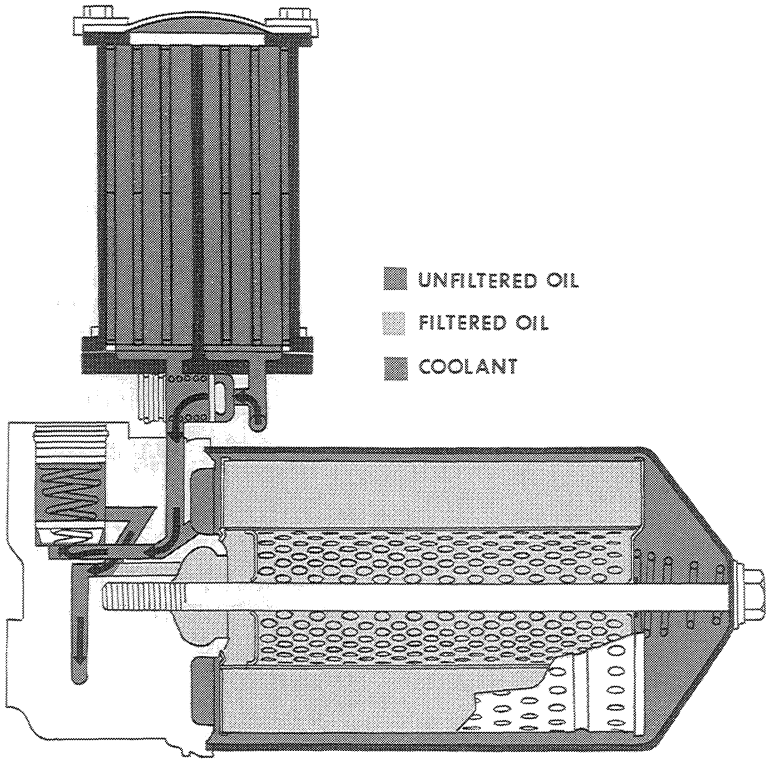

Figure M-10. Oil Flow With Plugged Oil Cooler and Oil Filter Element

CHECKING COMPRESSION PRESSURE

Diesel Engine

Should you receive a service complaint dealing with excessive oil consumption, loss of power, hard starting, a rough running engine or excessive exhaust smoke, check the compression in each cylinder as follows:

1. Clean the engine thoroughly; preferably by steam cleaning.

2. Remove the injector from the cylinder to be tested. Refer to the Section covering "Fuel Injection System and Case Powrcel".

   Reconnect the injector to the high pressure fuel line and connect the two fuel return lines with a fitting.

CAUTION

DO NOT PLACE YOUR HANDS OR ARMS IN FRONT OF THE INJECTOR NOZZLE. THE FUEL SPRAY HAS SUFFICIENT PENETRATING POWER TO PUNCTURE THE FLESH AND DESTROY TISSUE.

NOTE Be sure to clean the carbon out of the injector recess with the CD513 Carbon Reamer.

3. Install the CD505 Adapter in the injector recess in the cylinder head. Be sure to install the injector nozzle gasket on the adapter. Tighten the clamp nuts slightly. Connect the CD504 compression gauge to the adapter.

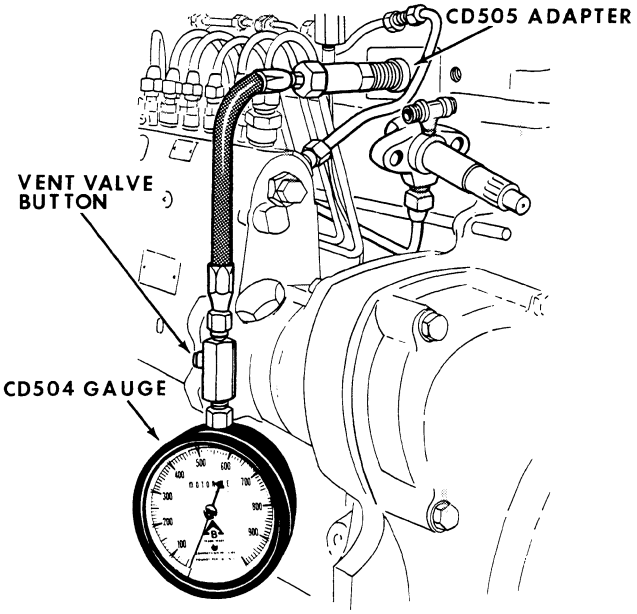

Figure M-11

IMPORTANT

THE ENGINE MUST BE WARMED UP TO OPERATING TEMPERATURE WHEN COMPRESSION PRESSURE IS TESTED.

4. Start the engine and set the engine speed at 1600 RPM, as determined with an accurate Tachometer.

NOTE When taking the tachometer reading at the tachometer drive, the reading will be one half crankshaft speed thus the tachometer would read 800 RPM. Visually check the spray pattern of the injector at this time. Refer to the Section "Fuel Injection System and Case Powrcel".

5. When taking the compression reading on each cylinder, first record the reading at 1600 RPM; then reduce the engine speed to 750 RPM and again record the reading. Use the highest figure obtained and compare it with the chart in the "Specifications" Section.

NOTE The reason for taking a reading at both 1600 and 750 RPM is that some gauges provide a more accurate reading at lower engine speeds. Always use the highest reading obtained.

6. Take several compression checks on each cylinder. This is done by pressing the vent valve button to relieve the pressure on the gauge. When the button is released the gauge will again indicate the pressure.

IMPORTANT

A UNIFORM PRESSURE READING FOR ALL OF THE CYLINDERS IN AN ENGINE IS MORE IMPORTANT THAN WHETHER OR NOT THE READING IS CLOSE TO MAXIMUM. SEE "SPECIFICATION" SECTION FOR MAXIMUM VARIATION BETWEEN CYLINDERS.

CHECKING COMPRESSION PRESSURE

Spark Ignition Engine

IMPORTANT

A uniform pressure reading for all of the cylinders in one engine is more important than whether or not the reading is close to maximum.

APPROXIMATE COMPRESSION PRESSURE AT CRANKING SPEED AND ALLOWABLE PRESSURE VARIANCE BETWEEN CYLINDERS IN ONE ENGINE - REFER TO "SPECIFICATION" SECTION.

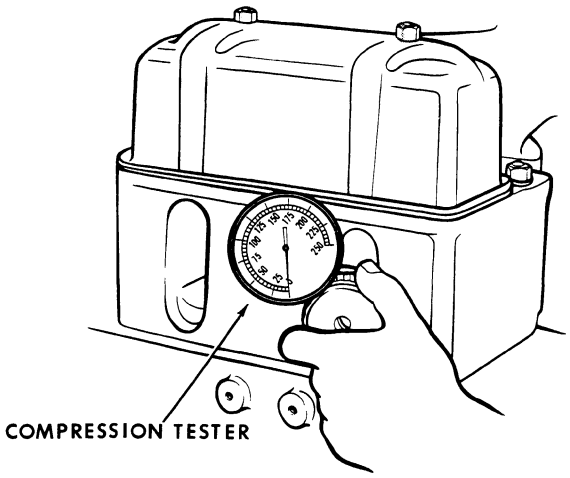

Figure M-12

Altitude will affect the maximum compression reading. An altitude of 5000 to 6000 feet may result in a lower reading of as much as 15 percent less than at sea level.

When compression pressure is checked, the engine must be warmed up to operating temperature. The transmission and hydraulic oil must also be warm. The storage battery must be fully charged.

Remove all spark plugs to provide minimum load on the starting motor and battery.

Shut-off the fuel, drain the carburetor and be sure the carburetor throttle (butterfly) valve is held in the wide open position.

Using an accurate compression tester, Kent-Moore Tool Number J7569 or equivalent, check and record the pressure reading on each cylinder at cranking speed.

IMPORTANT

Always take a second set of readings as a double check. This will indicate how much the loss of cranking speed due to battery discharge is affecting the compression pressure reading.

If there is a pressure variance greater than indicated in "Specification" Section or if all the cylinders read excessively low, the cause of the compression loss must be determined and corrected.

Quick Method of Determining Compression Loss

1. Squirt about a teasponful of engine oil into the cylinder that checks out low in compression. Too much oil will give a false reading.

2. Check the compression pressure in that cylinder and compare it to the first reading.

   If the compression pressure has increased materially, the leak is in the cylinder sleeve, piston and piston ring assembly. The oil has formed a temporary seal in the rings.

   If the pressure is approximately the same as the first reading, the valves are leaking. In this case both the valves and the rings could be leaking, so check both during the overhaul work.

REMOVAL AND DISASSEMBLY

Pistons-Connecting Rods-Cylinder Sleeves

(Refer to Figure M-13)

1. Drain the cooling system and crankcase.

2. Remove the cylinder head or heads as required. Refer to "Valve System and Cylinder Heads."

3. Remove oil pan.

4. Remove the connecting rod bearing cap and push the connecting rod and piston assembly up and out through the top of the cylinder.

NOTE

CHECK FOR A RIDGE FORMED ON THE SLEEVE AT THE TOP OF THE RING TRAVEL BEFORE REMOVING THE PISTON. IF A RIDGE IS PRESENT, REMOVE THE RIDGE BEFORE REMOVING THE PISTON TO PREVENT DAMAGING THE RINGS OR PISTON LANDS. REFER TO "INSPECTION".

5. Keep the pistons and connecting rods in their order of removal. They must be installed in the same cylinder from which they were removed. Immediately after removing each piston and connecting rod from the engine, replace the bearing cap on the connecting rod to avoid mixing them.

6. Remove the two piston pin retainer rings and slide the pin out of the rod.

7. To avoid damage to the piston, remove the piston rings with a ring expanded. See inset A.

8. Remove the bearing liners.

9. Using the special bushing arbor Inset B, press the piston pin bushing out of the connecting rod.

10. If the cylinder sleeves are to be removed, use a sleeve puller and adapter as illustrated in Inset C.

CAUTION

TO PREVENT SEDIMENT FROM THE SLEEVE ENTERING THE BEARINGS AND OIL PASSAGES, PROTECT THE CRANKSHAFT AND BEARINGS WITH CLEAN CLOTHS WHEN REMOVING SLEEVES.

11. Always remove and discard the cylinder sleeve "O" rings. NEVER ATTEMPT TO REUSE "O" RINGS.

INSPECTION

(Refer to Figure M-13)

The component parts can be easily cleaned and inspected for wear, scratches, score marks and cracks. Any parts that are excessively worn or damaged must be replaced.

Connecting Rods

Wash the connecting rod in a clean solvent. Check the connecting rods for cracks, noticeable twisting or bending.

Pistons

Clean pistons thoroughly. Pistons that are not damaged, worn, cracked or scored badly can be cleaned and used again. Remove all carbon deposits from the surface of the piston using a power driven wire brush. Be careful not to scratch the piston skirt. Use a ring groove cleaning tool to remove all carbon from the grooves. Carefully clean out the oil drains.

Check the diameter of the piston at the top - also at the skirt. Check the compression and oil ring side groove clearance. See Inset D. Refer to "Specification" Section.

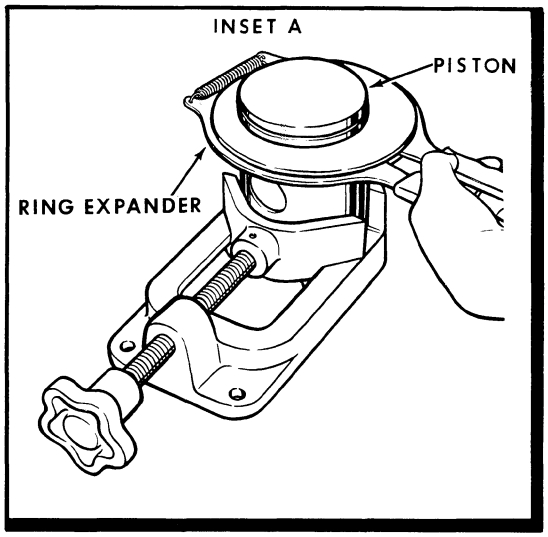
INSET A
PISTON
RING EXPANDER

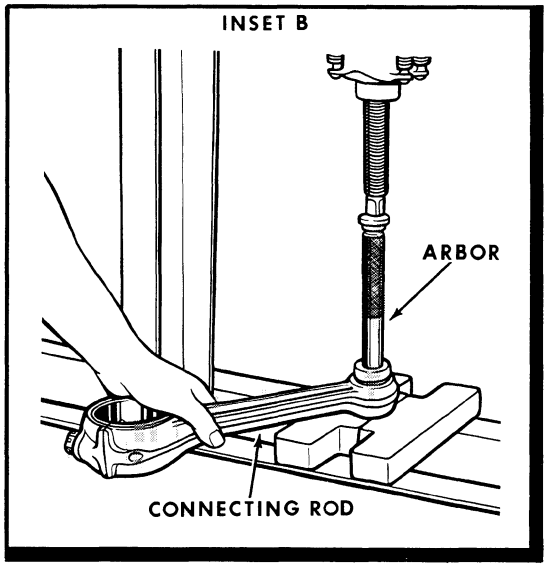
INSET B
ARBOR
CONNECTING ROD

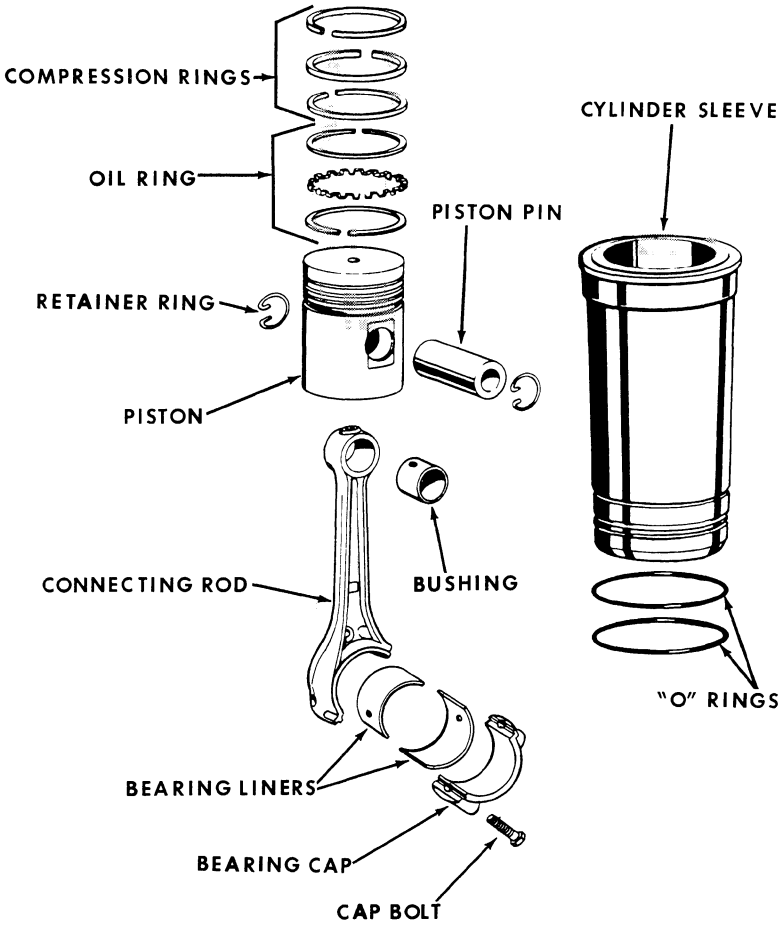
COMPRESSION RINGS
OIL RING
PISTON PIN
CYLINDER SLEEVE
RETAINER RING
PISTON
CONNECTING ROD
BUSHING
"O" RINGS
BEARING LINERS
BEARING CAP
CAP BOLT

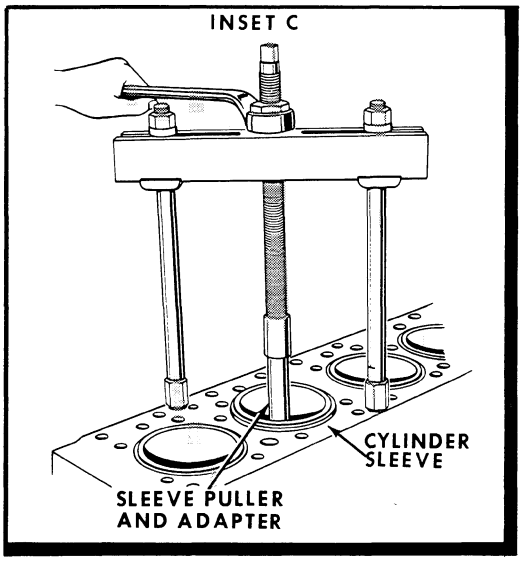
INSET C
CYLINDER SLEEVE
SLEEVE PULLER AND ADAPTER

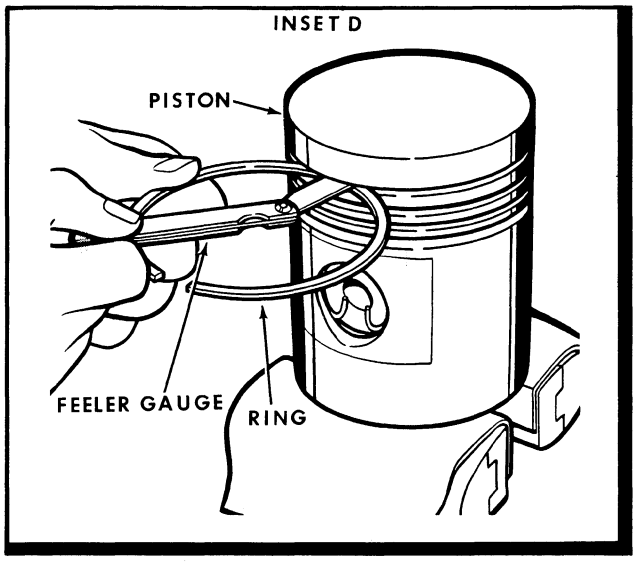
INSET D
PISTON
FEELER GAUGE
RING

Figure M-13

INSPECTION (CONT'D)

Piston Pins

Inspect the piston pin for wear, cracks, score marks and pitting. Replace the pin if the polished surface is dull rough or checked by acid corrosion. Check the piston pin diameter, fit in connecting rod and fit in piston. See "Specification" Section.

Bearing Caps and Liners

Inspect the connecting rod bearing caps for cracks or wear. If they are damaged, replace them.

Inspect the liners as follows:

Figure M-14, illustrates bearing failure due to normal wear from long use.

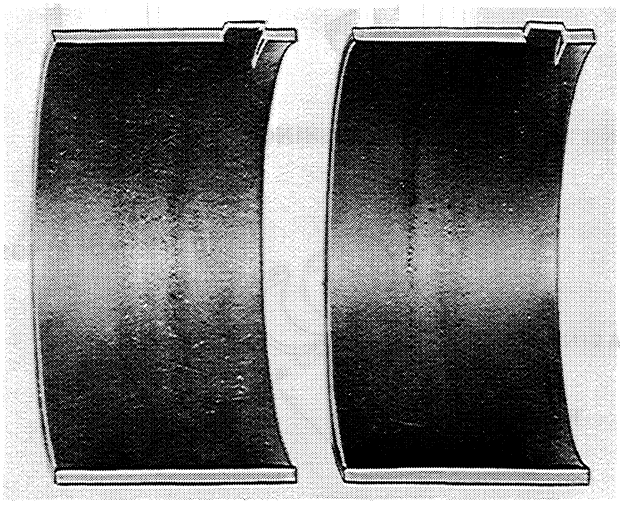

Figure M-14

Figure M-15, illustrates the lining material on the bearing worn and scratched by ex-

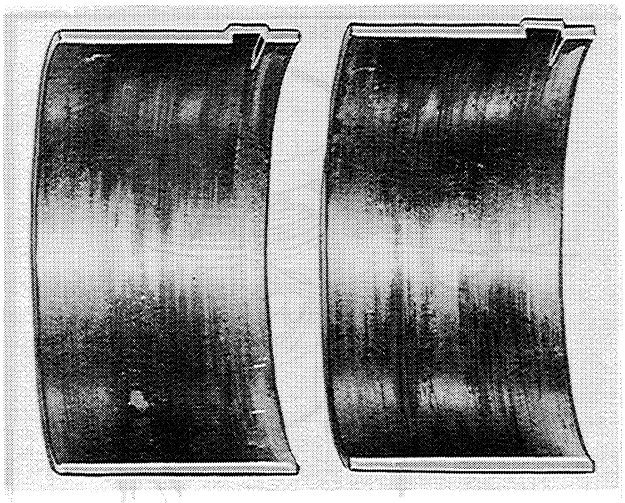

Figure M-15

cessive amounts of foreign particles in the lubricating oil.

Figure M-16, illustrates a bearing in an advanced stage of deterioration because of dirt between the connecting rod and the bearing.

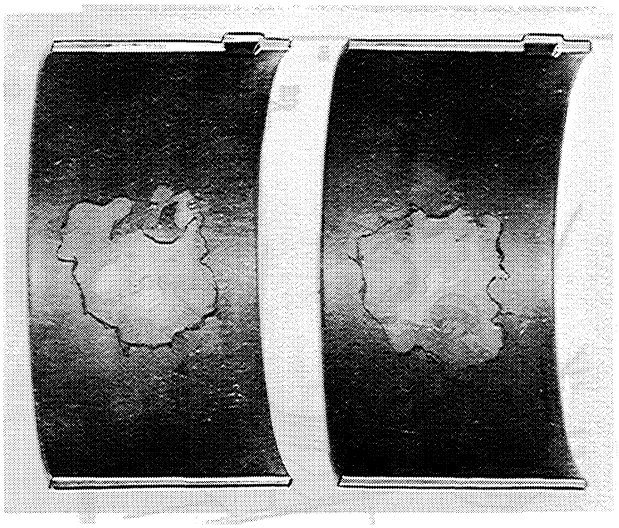

Figure M-16

Figure M-17, illustrates a bearing that has been pitted by sulphuric acid resulting

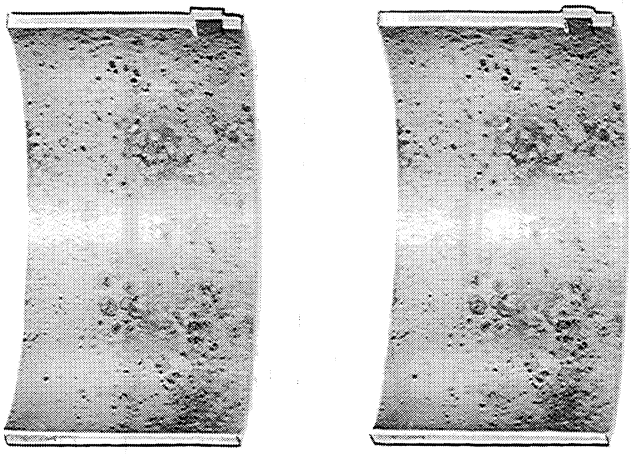

Figure M-17

from too high a sulphur content in the fuel.

Figure M-18, illustrates a bearing that has failed due to a continuous "overloading" and "lugging" of the engine. Continuous "overloading" or "lugging" eventually causes the metal to weaken and fail.

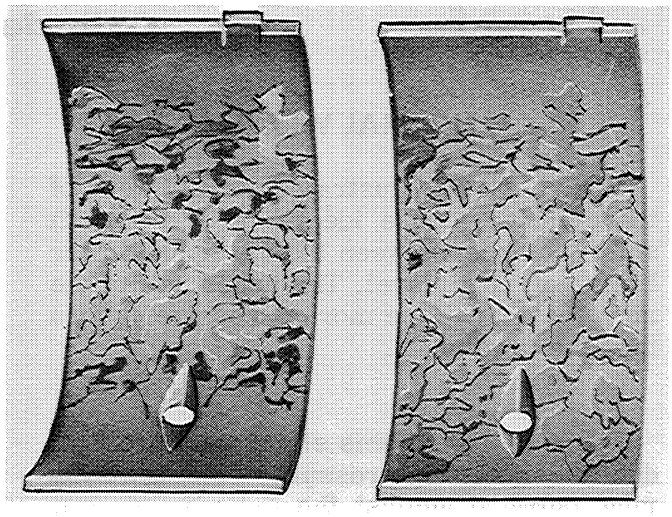

Figure M-18

Cylinder Sleeves

Inspect the sleeves for cracks, grooves or badly scored walls. Check the inside diameter of the sleeve just below the top of ring travel. See "Specification" Section.

Check for out-of-round sleeves by checking inside diameter below top ring travel in a position parallel to crankshaft. Then check the diameter at right angles (90 degrees) to the crankshaft. The difference in the reading will show the amount the sleeve is out-of-round. See "Specification" Section.

Check for a ridge at the top of the ring travel. See Figure M-19.

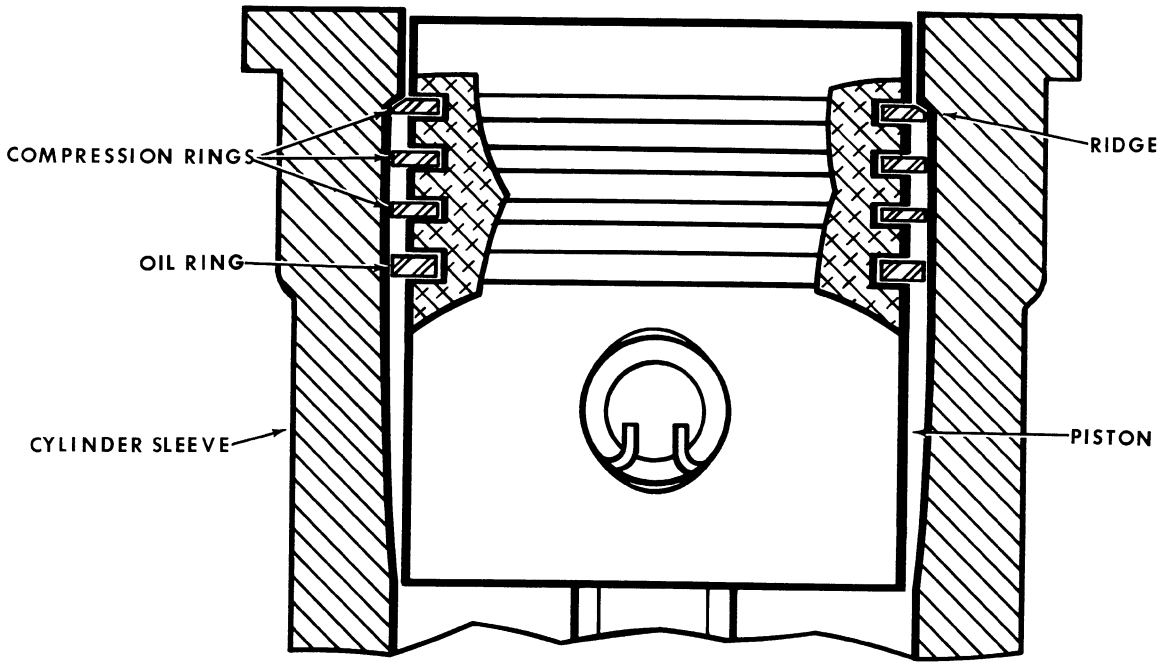

Figure M-19

When new piston rings are installed, this ridge must be removed. A cylinder sleeve ridge reamer (or boring tool) must be used.

INSPECTION (CONT'D)

Cylinder Sleeves

NORMAL WEAR

Figure M-20, illustrates normal wear of the cylinder sleeve identified by a smooth shiny surface between the upper and lower limits of ring travel. The upper half of the ring travel will be more excessively worn than the lower half.

There is always this slight wear present, due to combustion pressures holding the top ring outward against the cylinder sleeve.

Normally a carbon deposit is formed on the sleeve above the ring travel area.

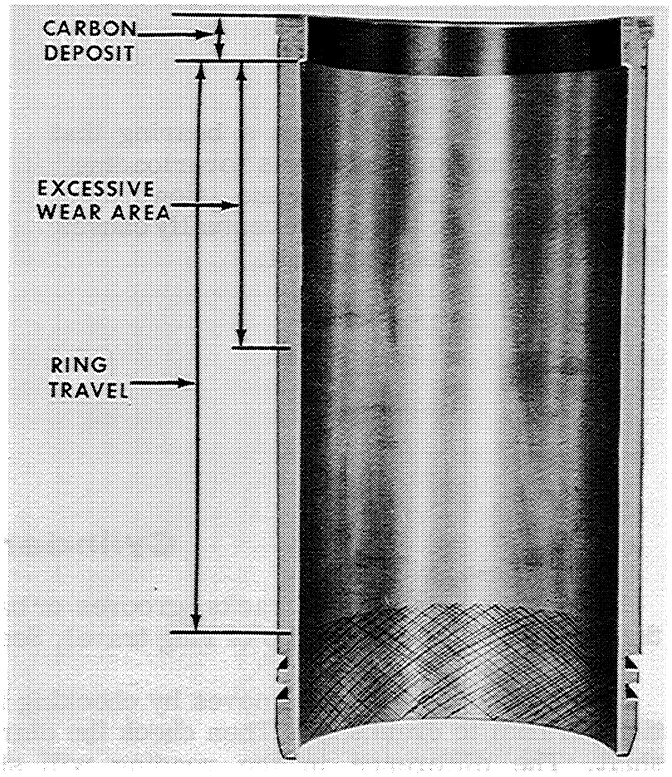

Figure M-20

SCUFFED CYLINDER WALLS

A scuffed cylinder wall can be identified by small discolored spots or vertical lines caused by the scuffing action of the piston

The discolored spots are caused by metal tearing away from one spot and deposited on another. The vertical scuff marks are caused by this metal coming in contact with the piston.

This scuffing may be in one particular spot or it may occur the entire length of the piston travel.

Scuffing is caused by insufficient lubrication or dirty lubricating oil. It is very important to always maintain the correct coolant temperature and to have clean lubricating oil.

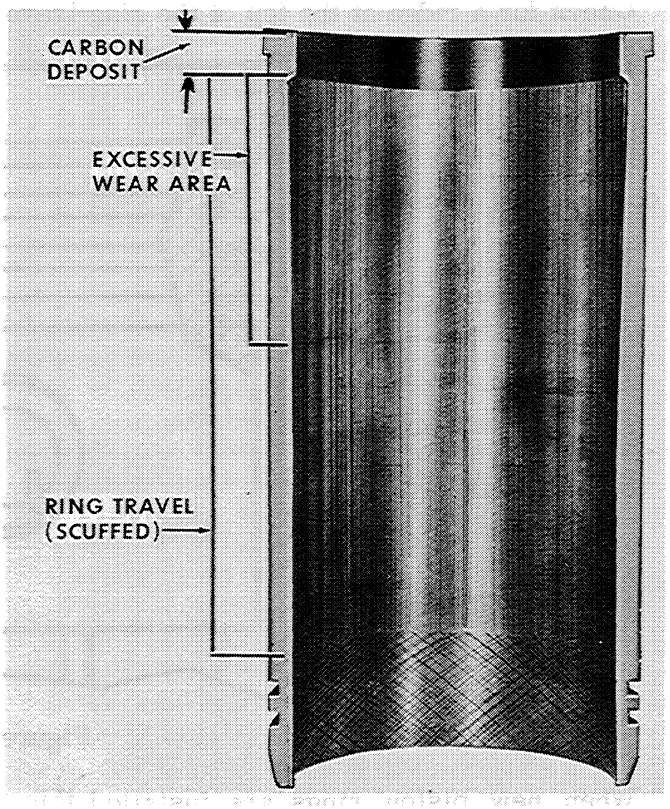

Figure M-21

INSPECTION (CONT'D)

Cylinder Sleeves

CYLINDER SLEEVE HONING

Excessive glaze (smooth shiny cylinder wall) forming on cylinder walls of a new or overhauled engine is due to Improper Run-In Procedure. Excessive oil consumption results from the glaze build up not allowing the rings to mate properly with the cylinder wall. Excessively glazed cylinder walls can be avoided by properly instructing your customer in the correct Run-In Procedure in the Operator's Instruction Manual. The two most important factors are:

1. Maintain the correct Operating Temperature.

2. Maintain a Sufficient Load on the Engine.

These two factors will permit the slight wear necessary for mating of rings to the cylinder walls.

Use a power hone as illustrated or equivalent, to remove the glaze formed on the inner surface of cylinder sleeve that has been in use.

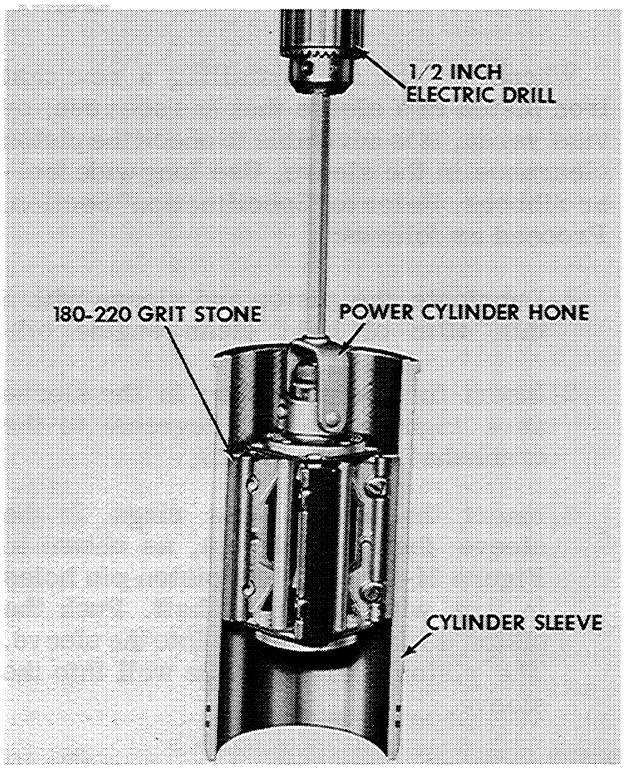

Figure M-22

The necessary honing can be done by using 180 - 220 grit stones.

The glaze must be removed so that the piston rings can properly seat themselves within a reasonable period of run-in time.

NOTE To prolong the life of the stone it is suggested that a honing oil be used when removing the glaze from the cylinder walls.

IMPORTANT

AFTER CYLINDER SLEEVES ARE HONED, THEY MUST BE THOROUGHLY CLEANED. IF THE SLEEVES ARE NOT CLEANED THOROUGHLY AFTER HONING, A CONSIDERABLE AMOUNT OF ABRASIVE MATERIAL WILL REMAIN IN THE ENGINE.

Use the following procedure to protect the engine from abrasives:

1. Before honing:
   Plug the bottom of the cylinder sleeves with clean oil saturated rags to prevent abrasives and dirt, resulting from the honing operation, from dropping onto the crankshaft and into the crankcase.
2. After honing:
   Wipe as much of the abrasive deposits off the cylinder sleeve walls as possible, then swab each sleeve with a clean cloth dampened in warm water and a mild detergent soap. After swabbing the sleeve with the damp cloth, wipe it out with a Number 10 engine lubricating oil.

CAUTION

SWAB AND WIPE OUT THE CYLINDER SLEEVE WALLS UNTIL A CLEAN WHITE CLOTH WILL REMAIN ABSOLUTELY CLEAN WHEN IT IS RUBBED ON THE WALL OF THE SLEEVE. ONE SWABBING - WIPING OPERATION IS NOT ENOUGH!

DO NOT USE GASOLINE OR KEROSENE TO CLEAN THE WALLS OR A SLEEVE. NEITHER ONE WILL REMOVE GRIT FROM THE WALLS.

INSPECTION (CONT'D)

Cast Iron Piston

Whenever you are installing a new cast iron piston in a sleeve that has seen use, or vise versa, it is advisable to check the piston clearance in the sleeve. Use long wide feeler ribbons. Refer to "Specification" Section. Proceed as follows:

1. Lubricate the piston and sleeve with a thin film of light clean engine oil.

2. Insert the feeler ribbon in the sleeve at a right angle (90 degrees) to the crankshaft, Figure M-23.

3. Insert the piston, less rings, in the sleeve (bottom side up), as shown in Figure M-23, with the piston pin holes in-line with the crankshaft. Push the piston as far as possible into the sleeve. The piston skirt must be well into the sleeve.

Repeat this check using different thickness of feeler ribbon. Refer to "Specification" Section for correct clearance.

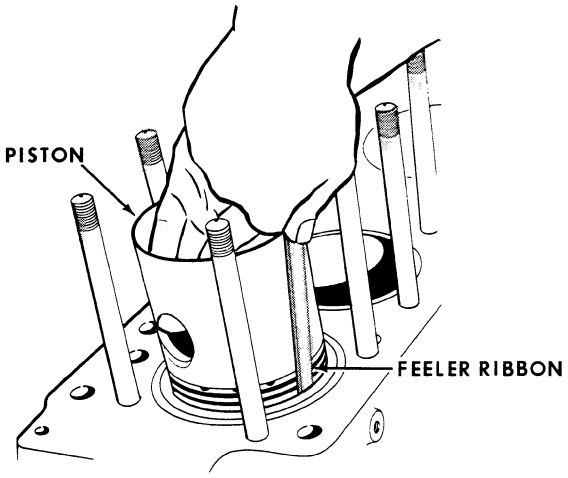

Figure M-23

Aluminum Piston

On the aluminum piston, the only accurate method of checking the piston clearance in the sleeve is by measuring both parts as follows:

1. Using a micrometer, measure the outside diameter of the piston at the top of the skirt (immediately below the oil ring) Figure M-24.

IMPORTANT

Take this measurement only on the thrust face of the piston, or perpendicular to the piston pin bore, Figure M-24.

When checking aluminum piston clearance, the temperature of the piston and engine should be as close to 70 degrees Fahrenheit as is practical. Checking piston clearance where air temperatures are extremely low or high may result in misleading readings.

Temperature affects the expansion and contraction of aluminum.

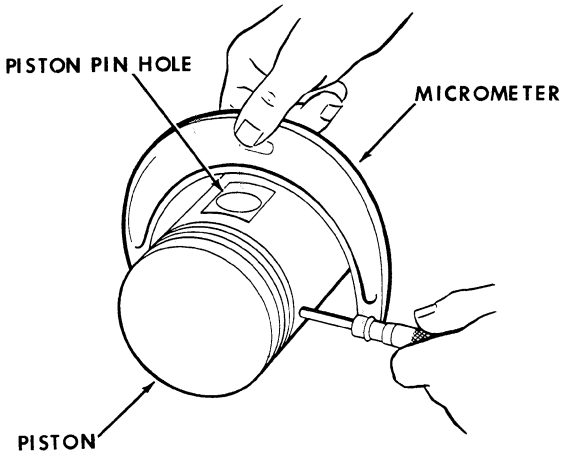

Figure M-24

2. Use an inside micrometer, Figure M-25 or a cylinder bore gauge, Figure M-26. Check the measurement of the inside diameter of the sleeve at a point 9/16 of an inch from the cylinder head end of the sleeve - (this is the top end of the ring travel).

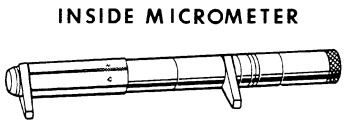

Figure M-25

NOTE

CHECK THE INSIDE DIAMETER OF THE SLEEVE BOTH LENGTHWISE AND CROSSWISE, FIGURE M-26. CHECKING BOTH LENGTHWISE AND CROSSWISE WILL DETERMINE WHETHER OR NOT THE SLEEVE IS OUT OF ROUND. REFER TO "SPECIFICATION" SECTION.

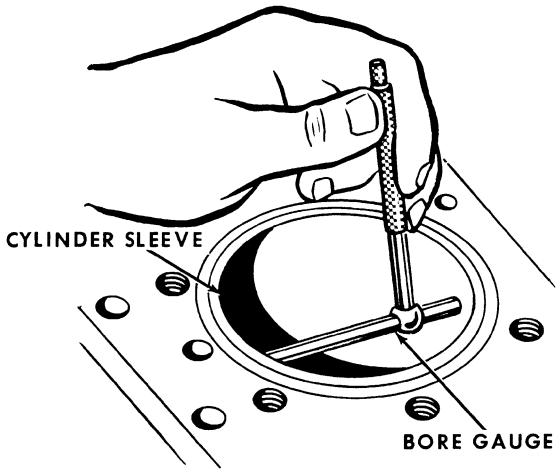

Figure M-26

3. The difference between the measurement of the piston and cylinder sleeve will give you the clearance. Refer to "Specification" Section.

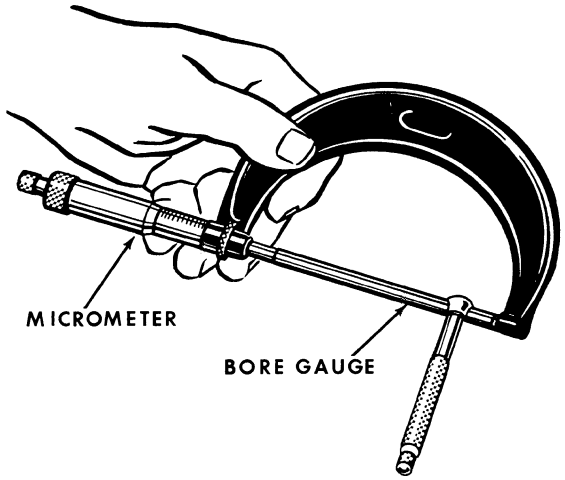

Figure M-27

4. After checking the sleeve 9/16 of an inch from the top, lengthwise, check at several points down the length of the sleeve. Subtract the smallest diameter from the largest diameter will give the taper of the sleeve. Refer to Figure M-28 and "Specification" Section.

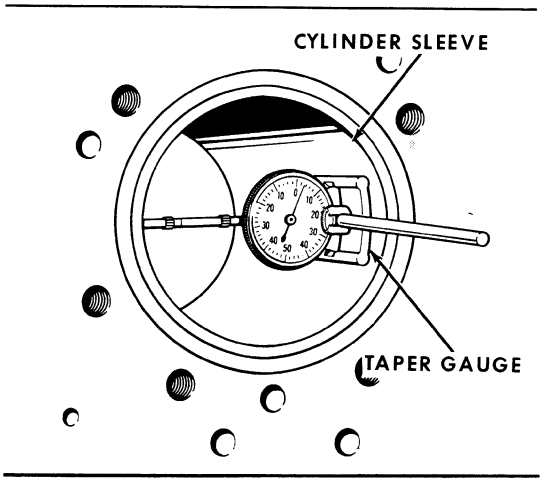

Figure M-28

Top to bottom of ring travel (approximately 3 inches) is where excessive wear usually occurs in the cylinder sleeve bore.

ASSEMBLY AND INSTALLATION
Cylinder Sleeves-Connecting Rods-Pistons
(Refer to Figure M-29)

CYLINDER SLEEVE

1. Thoroughly clean the inner surfaces of the cylinder block that contact the cylinder sleeve.

2. If the original cylinder is installed, make sure the outside surface is clean. The packing ring grooves on the sleeve and the flange at the upper end of the sleeve must be absolutely clean.

3. Check the sleeve by placing it in the block without the packing rings. Turn the sleeve by hand to make sure it is free and has a loose fit.

4. Carefully install new "O" rings in the grooves on the sleeve. Be certain the rings are not twisted or cut when they enter the grooves.

5. Lubricate the inside surfaces of the cylinder block, and place a very light coating of vaseline on the rings.

6. Carefully lower the sleeve into the block and press it into place by hand. It should not be necessary to drive the sleeve in.

CAUTION

HANDLE CYLINDER SLEEVES WITH CARE. A VERY LIGHT BLOW IS SUFFICIENT TO MAKE A SLEEVE OUT-OF-ROUND.

PISTON PIN BUSHING

1. Clean the inside surface of the bushing hole in the rod.

2. Carefully align the oil hole in the new bushing with the oil hole in the rod. Refer to inset A. Then install the bushing with the same driver used in removing it. It does not matter where the split in the bushing is as long as the oil holes are aligned.

3. Place the rod on the fixture (See Inset B) less the liners and tighten the capscrews. Refer to "Specification" Section.

4. Push the bushing end of the rod down between the reamer guide until the rod is resting on the stop. See Inset C.

NOTE

IF THE ROD BINDS BETWEEN THE CHEEKS OF THE REAMER GUIDES, THE ROD IS TWISTED AND MUST BE REPLACED. DO NOT TRY TO STRAIGHTEN THE ROD.

5. Carefully ream the bushing with the reamer provided with the fixture. See Inset D. Do not crowd the reamer too hard.

6. After reaming check the bushing for a smooth surface and even thickness. Check the diameter after reaming. See "Specification" Section.

CAUTION

IF THE REAMER FAILS TO "CLEAN UP" THE ENTIRE BUSHING, OR IF THE BUSHING IS THIN AT ANY POINT, IT INDICATES THAT THE CONNECTING ROD IS BENT OR BOWED, DISCARD THE ROD. NEVER ATTEMPT TO STRAIGHTEN IT.

PISTON PIN

1. Lightly oil the connecting rod bushing and slide the rod over the center area of the pin. If the rod can be wiggled appreciably on the pin or if oil is squeezed out between the bushing and pin, either the bushing is worn or the pin is worn. Normally the bushing will wear before the pin does.

2. Install one piston pin retainer in the piston and warm the piston to 50 degrees warmer than the piston pin. Press the pin into the piston bore with hand pressure.

CAUTION

USE A STEADY CONTINUOUS PRESSURE TO PUSH THE PIN INTO PLACE. DO NOT DRIVE OR POUND THE PIN INTO PLACE. BE CERTAIN THE PISTON IS STARTED STRAIGHT.

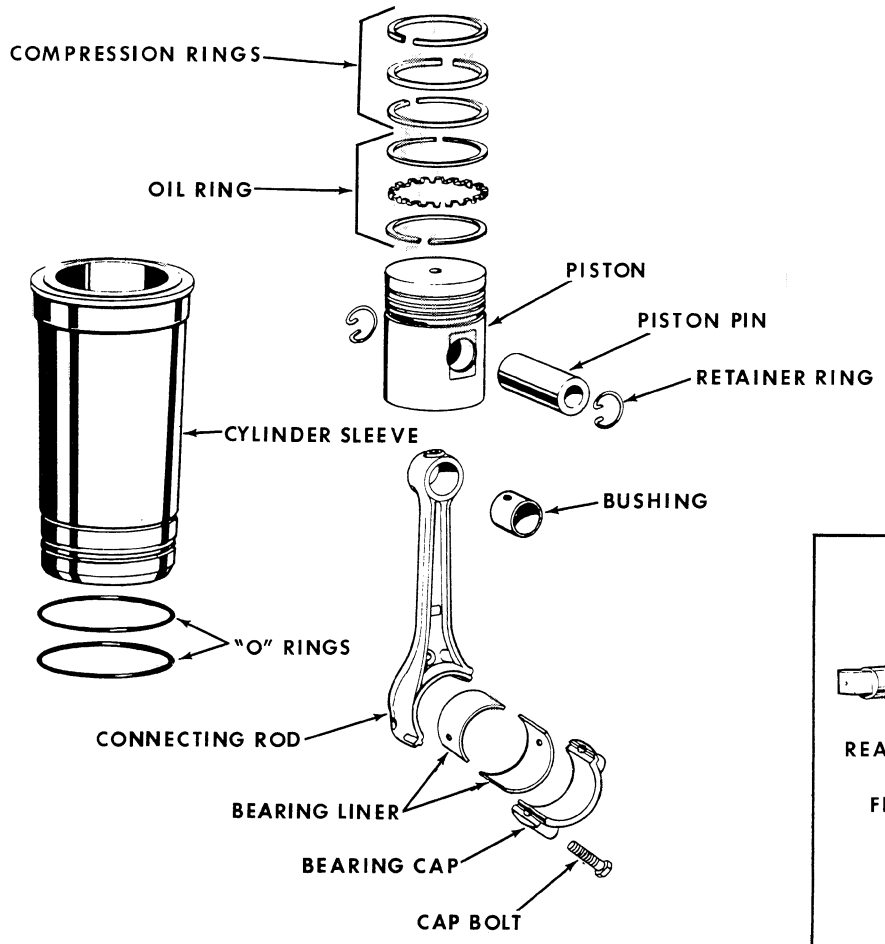
COMPRESSION RINGS
OIL RING
PISTON
PISTON PIN
RETAINER RING
CYLINDER SLEEVE
BUSHING
"O" RINGS
CONNECTING ROD
BEARING LINER
BEARING CAP
CAP BOLT

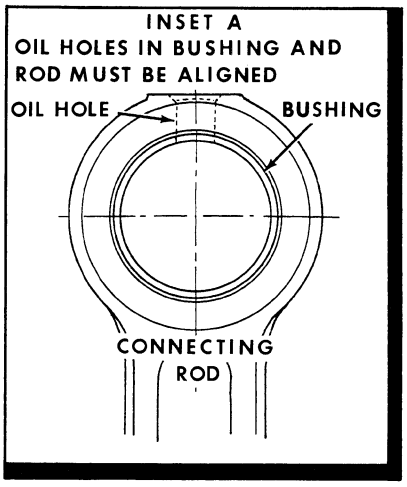
INSET A
OIL HOLES IN BUSHING AND ROD MUST BE ALIGNED
OIL HOLE
BUSHING
CONNECTING ROD

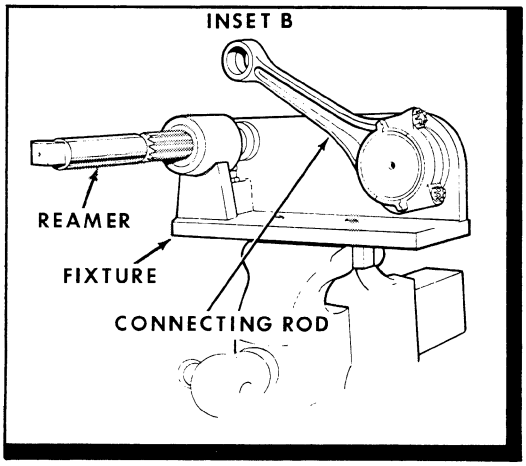
INSET B
REAMER
FIXTURE
CONNECTING ROD

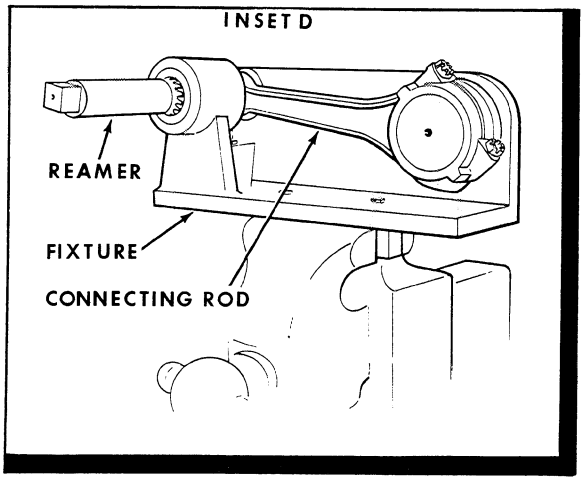
INSET D
REAMER
FIXTURE
CONNECTING ROD

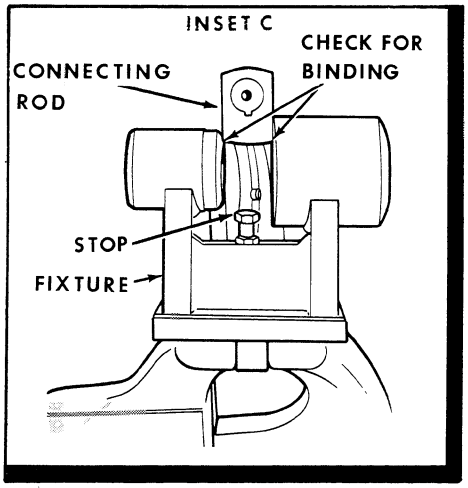
INSET C
CONNECTING ROD
CHECK FOR BINDING
STOP
FIXTURE

Figure M-29

CHECKING RING END GAP

Install each ring 9/16" into the cylinder sleeve and check the gap with a feeler gauge, Figure M-30.



Figure M-30

COMPRESSION RINGS

There are four types of compression rings used in Case engines and they are installed as follows:

NOTE

When the compression rings are marked "T", "Top" or other identification mark, install this mark toward top of the piston.

TYPE 1

Install with inside groove up toward top of piston.

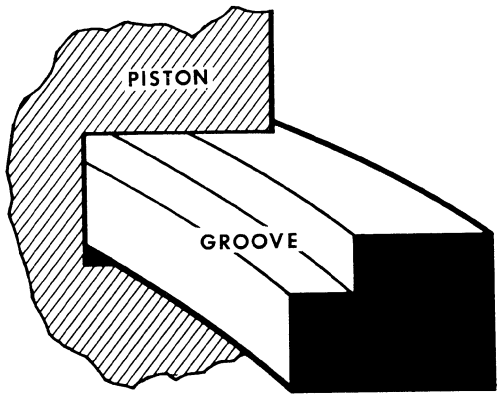

Figure M-31

TYPE 2

Install with taper slanting out and away from top of piston.

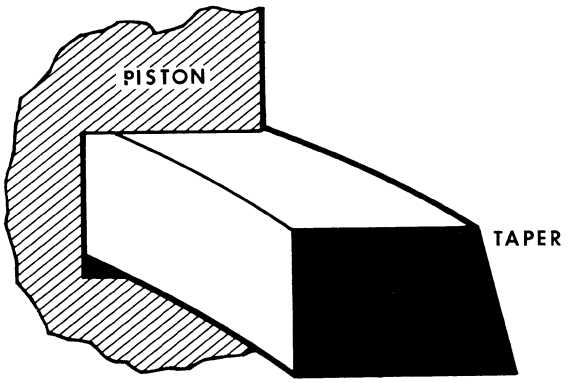

Figure M-32

TYPE 3

Install with outside groove down toward skirt of piston.

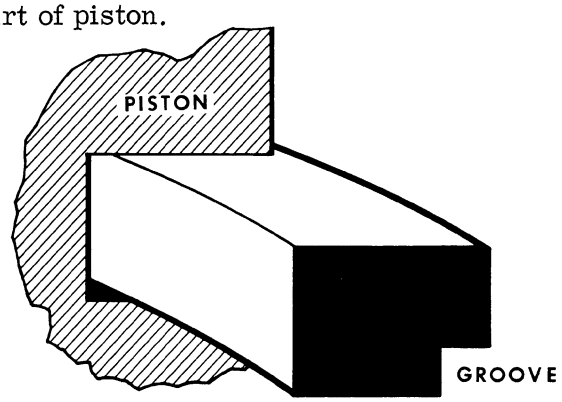

Figure M-33

TYPE 4

Install with beveled edge up toward top of piston.

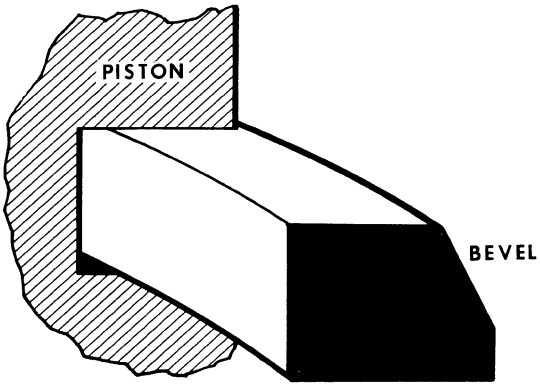

Figure M-34

ASSEMBLY AND INSTALLATION (CONT'D)

OIL RINGS

There are three types of oil rings used in Case engines and they must be installed as follows:

TYPE 1

Install expander in ring groove. Install lower steel rail, cast iron separator and the upper steel rail.

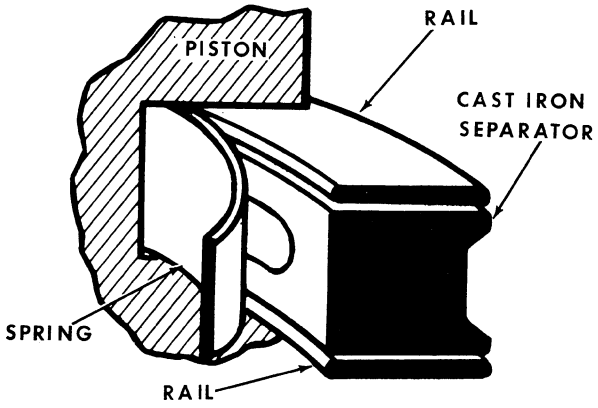

Figure M-35

There are two types of expander springs with this oil ring. The Normal which has a plain end and the Hi-Pressure which has notched end.

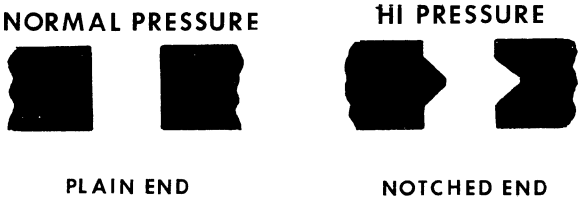

Figure M-36

The Normal expander should be installed in new, rebored or slightly worn engines.

The Hi-Pressure expander should be installed in badly worn engines, known oil pumping engines and in deep grooves when specified by the instructions packed with the oil ring.

NOTE

Never install two expanders in the same piston groove.

TYPE 2

Install the expander spaced in the groove and do not overlap or cut off the ends. Install the lower steel rail and the upper steel rail.

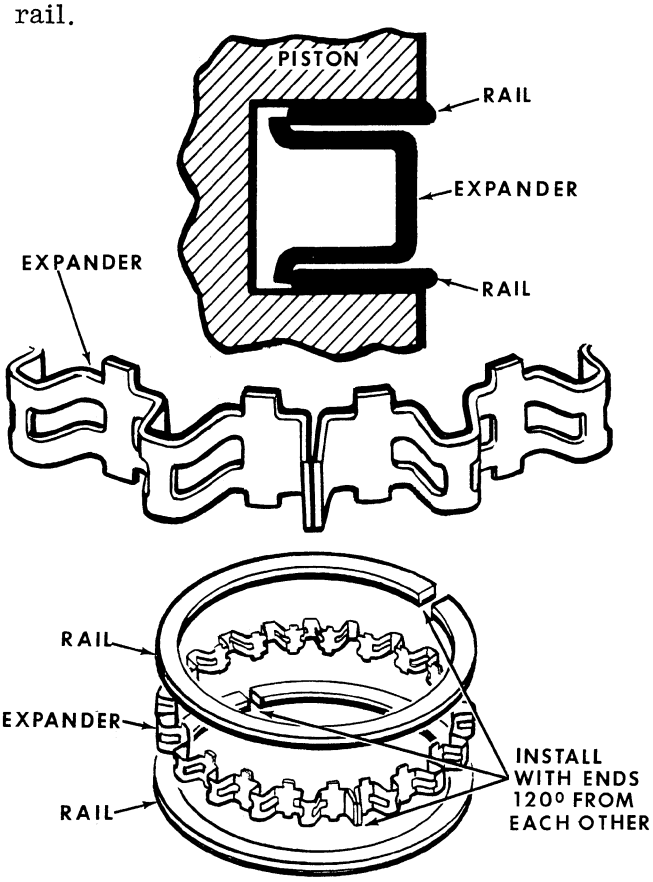

Figure M-37

TYPE 3

Install the oil spring into the groove on the inside of the oil ring and install the oil ring into the groove in the piston. ***NOTE*** The ring can be installed either with the spring up or down.

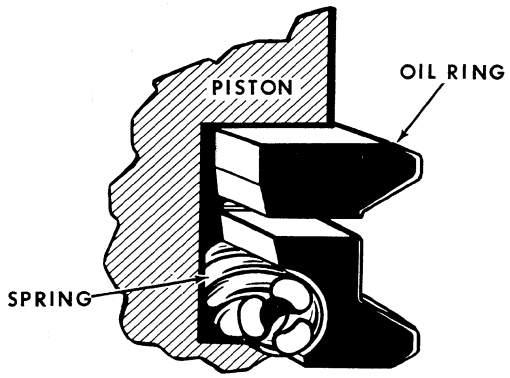

Figure M-38

ASSEMBLY AND INSTALLATION (CONT'D)
(Refer to Figure M-39)

Bearing Liners

1. The bearing liner halves are identical. The important thing is to get the bearing liner lock aligned with the lock groove in the rod and in the bearing cap. Refer to inset A.

CAUTION

ALWAYS INSTALL A PRECISION LINER BY STARTING IT AS SHOWN IN INSET A, THEN SLIDING IT INTO PLACE. NEVER INSTALL A LINER BY PRESSING AGAINST THE MIDDLE OF THE LINER AND "SNAPPING" IT INTO PLACE.

CONNECTING ROD JOURNALS

1. Clean the journal surface thoroughly and dry with compressed air.

2. Crank engine until the journal being checked is at its lowest position. Using a micrometer take three readings in a vertical plane straight across the journal. Record them.

3. Make and record a second set of measurements exactly 90° away from the first.

4. Comparing the first and second sets of measurements will give you the amount of out-of-round on the journal surface. See "Specification" Section.

5. Checking each set of measurement across will give you the amount of taper in that plane of the journal. See "Specifications" Section.

NOTE

UNDERSIZE CONNECTING ROD BEARING LINERS ARE AVAILABLE FOR SERVICE.

PISTONS AND CONNECTING RODS

1. When installing the piston and connecting rod, lubricate the piston and rings and place a ring compressor over the piston and rings. See Inset B. Be sure the rings are staggered.

2. Make sure the rings are fully in their groove before tightening the ring compressor. Tighten the compressor a little at a time making sure the rings are free.

3. Wipe the rod bearing journal clean and lubricate the cylinder sleeve.

4. The connecting rods are stamped consecutively 1 to 6, on the bearing end of the rods. Number 1 connecting rod must go in Number 1 cylinder (front). The number must go on the camshaft side of the engine. The bearing cap with the matching number must be installed with the number toward the camshaft. The cap can be installed only one way however. Tighten the rod bearing cap screws to the correct torque. Also check the connecting rod end play. Refer to inset C. See "Specification Section.

CHECKING BEARING CLEARANCE

A plastic Gauge material manufactured commercially may be used for checking bearing clearances as follows:

1. Remove the bearing cap and wipe the oil from the bearing shell and crankshaft journal.

NOTE

WHEN CHECKING BEARING CLEARANCE DO NOT HAVE THE WEIGHT OF THE CRANKSHAFT ON THE BEARING CAPS.

2. Place a piece of plastic gauge full width on the bearing liner, refer to inset D.

3. Tighten the bearing cap to specified torque Refer to "Specification" Section.

4. Remove the bearing cap. The flattened plastic gauge will be found either on the bearing shell or crankshaft.

5. Compare the flattened gauge material at its widest point with the scale that is furnished. Refer to inset E.

6. The number within the graduation indicates clearance in thousandths of an inch. Refer to "Specification" Section.

NOTE

UNDERSIZE LINERS ARE AVAILABLE. IF IT IS NECESSARY TO GRIND DOWN ONE OR MORE JOURNALS, IT IS ADVISABLE TO GRIND ALL OF THE JOURNALS.

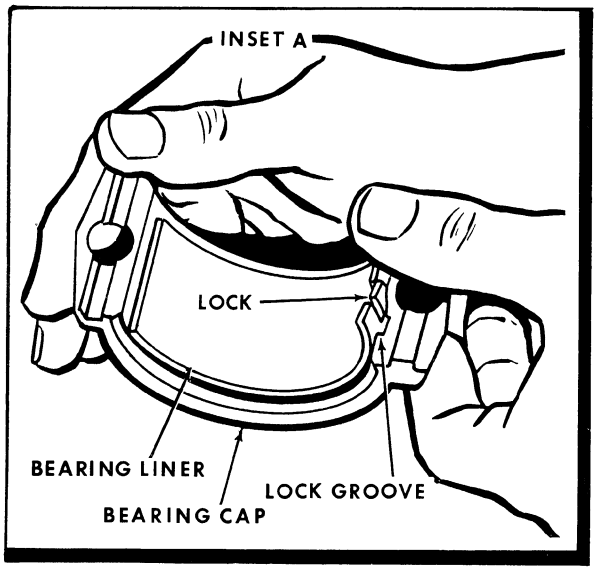
INSET A
LOCK
BEARING LINER
BEARING CAP
LOCK GROOVE

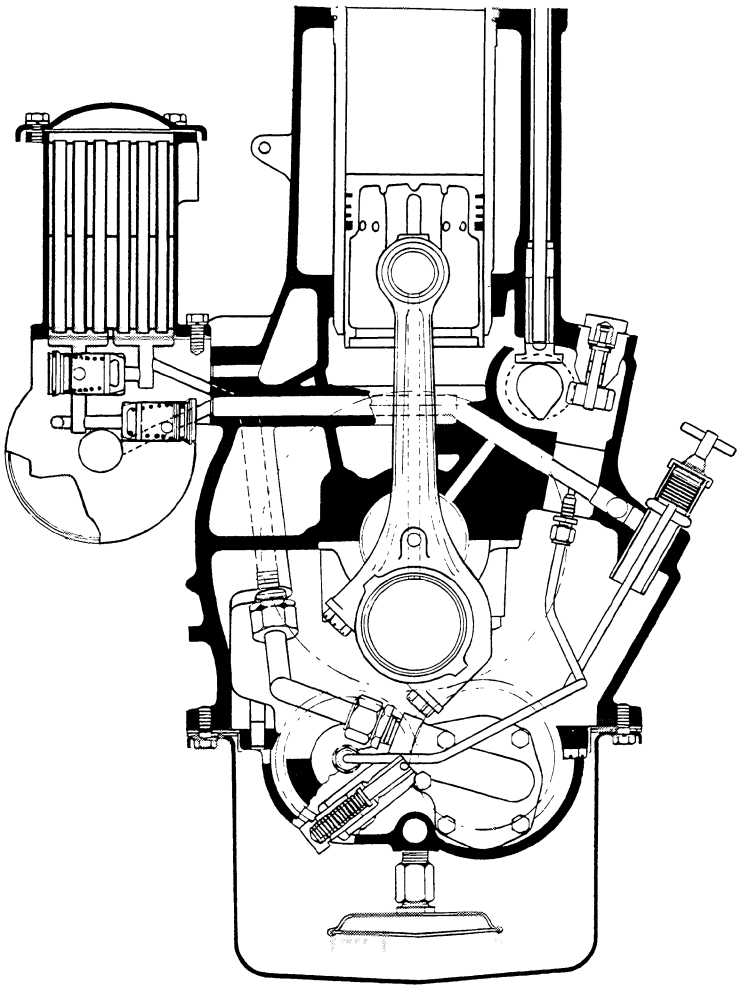

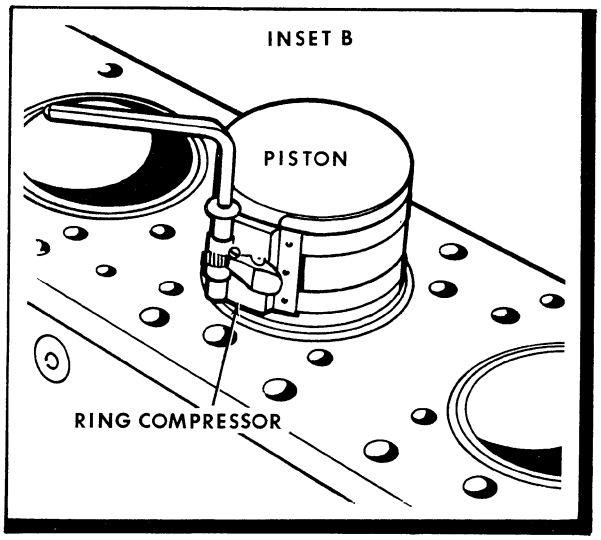
INSET B
PISTON
RING COMPRESSOR

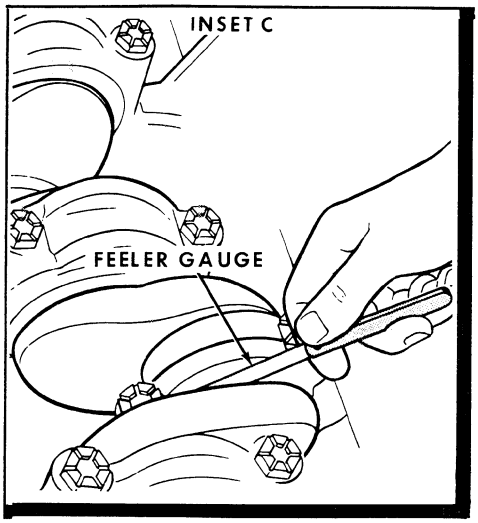
INSET C
FEELER GAUGE

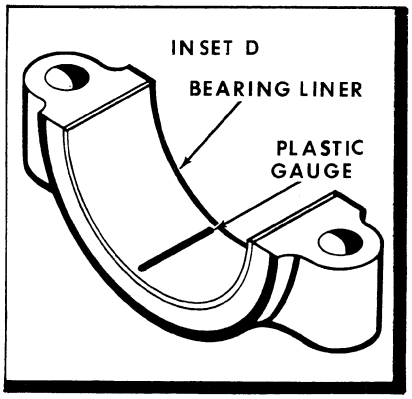
INSET D
BEARING LINER
PLASTIC GAUGE

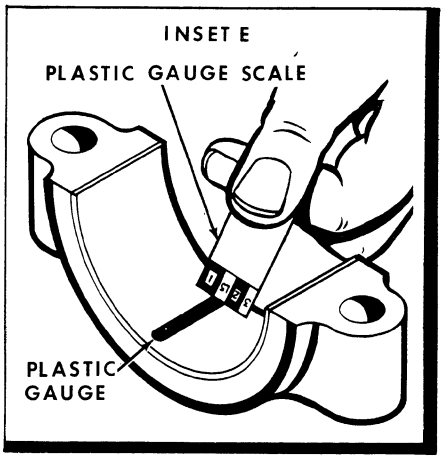
INSET E
PLASTIC GAUGE SCALE
PLASTIC GAUGE

Figure M-39

REMOVAL AND DISASSEMBLY

Crankshaft-Rear Oil Seal
Timing Gear Cover-Crankshaft Pulley

(Refer to Figure M-40)

CRANKSHAFT PULLEY

1. Remove the pulley bolt and washer.

2. Using a suitable puller, remove the pulley from the crankshaft. The pulley is keyed to the shaft.

TIMING GEAR COVER

1. Remove the bolts and lockwashers fastening the cover to the cylinder block. ***NOTE*** The cover is positioned by two dowel pins. Be careful not to damage the pointer located on the timing gear cover.

REAR OIL SEAL

1. Remove the oil seal retainer and press out the oil seal.

CRANKSHAFT

1. Remove the oil pan, oil pump, flywheel, rear oil seal retainer and timing gear cover.

2. Remove the bearing caps and lift crankshaft from engine block.

3. If it is necessary to remove the crankshaft gear, the gear should be pulled using an OTC 515 Puller or equivalent. The gear is pressed and keyed to the crankshaft. Two threaded holes are provided in the gear for pulling. Refer to inset A.

INSPECTION

(Refer to Figure M-40)

Clean the crankshaft thoroughly in clean diesel fuel. Blow out all the oil holes with compressed air. Dry with compressed air.

Measure each main bearing journal with a micrometer as follows:

a. Measure the journal until the smallest diameter is obtained.

b. Using this as a starting point take three measurements across the journal left side - center right side. Record them.

c. Take a second set of 3 measurements at a point 90 degrees from the first measurement and record them.

d. Comparing the two sets of measurements will give you the amount of journal out-of-round. Refer to "Specification" Section.

If one or more of the journals is out-of-round or worn, the crankshaft must be ground until the journals are true and meet specifications for a undersize liner. Refer to "Specification" Section.

Grinding crankshaft main journals requires precision equipment. The journals must be checked with a micrometer frequently during the grinding operation.

NOTE

Before installing a new crankshaft, check the shaft for out-of-round using V blocks and a dial indicator.

Support the shaft with "V" blocks under the main bearing journals. Measure run-out with a dial indicator. Refer to "Specification" Section.

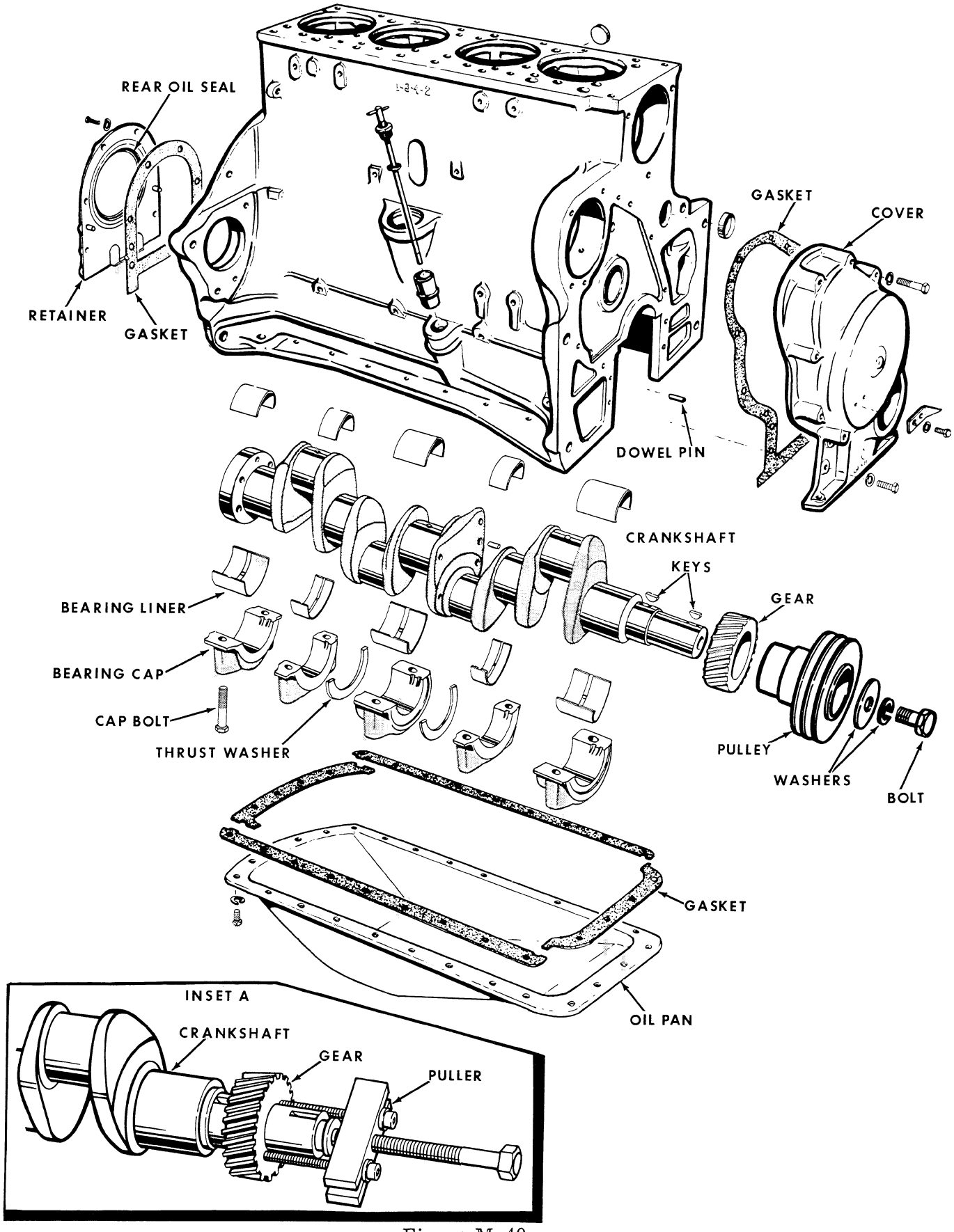
REAR OIL SEAL
RETAINER
GASKET
GASKET
COVER
DOWEL PIN
CRANKSHAFT
KEYS
GEAR
BEARING LINER
BEARING CAP
CAP BOLT
THRUST WASHER
PULLEY
WASHERS
BOLT
GASKET
OIL PAN
INSET A
CRANKSHAFT
GEAR
PULLER

Figure M-40

INSPECTION (CONT'D)

Bearing Liners

Figure M-41 illustrates bearing failure due to normal wear from long use.

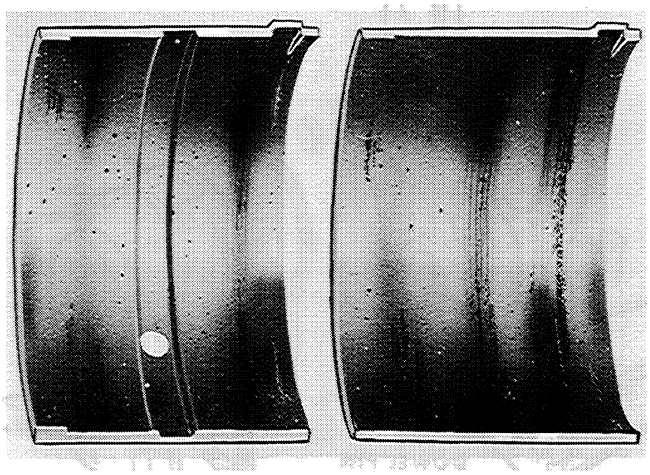

Figure M-41

The bearings illustrated in Figure M-42 illustrate the lining material on the bearing worn or scratched by excessive amounts of foreign particles in the lubricating oil. The entire engine lubricating system must be cleaned and flushed to prevent recurrence of this type of failure.

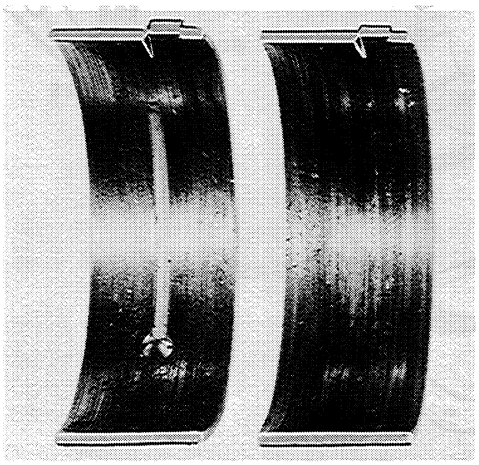

Figure M-42

Figure M-43 illustrates dirt particles between the crankcase bore and the bearing liner back.

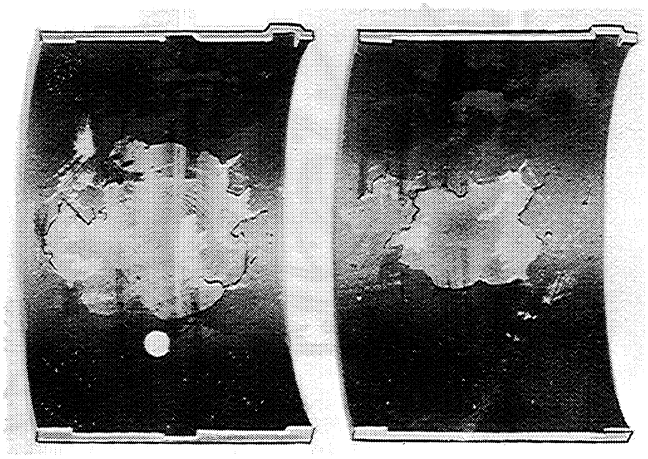

Figure M-43

The heat that would normally flow through the failed area must flow to the sides of the bearing where there is contact. Make sure the surface of the crankcase bore and the back of the liner is clean.

Figure M-44 illustrates liners that have failed due to continous "overloading" and "lugging".

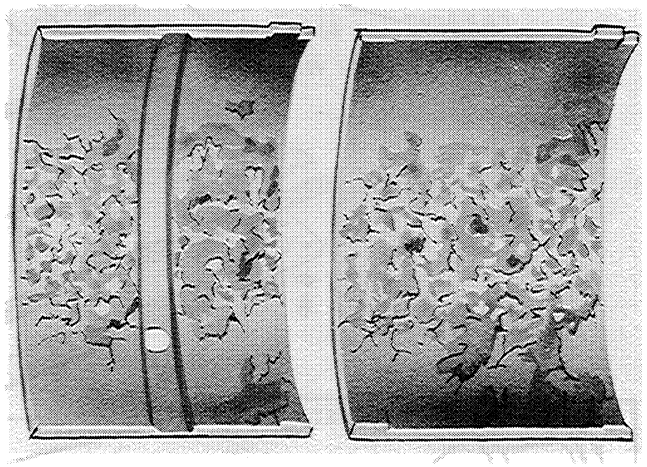

Figure M-44

The engine must not be continually lugged down below its full load governed engine speed.

The bearing liners illustrated in Figure M-45 , failed because the oil supply was cut off due to installing a lower main bearing liner in the block instead of an upper half. The lower half does not have an oil hole and groove, thus the bearing did not receive any pressure lubrication from the oil pump. A stained circle on the back of the bearing gives proof the oil hole in the

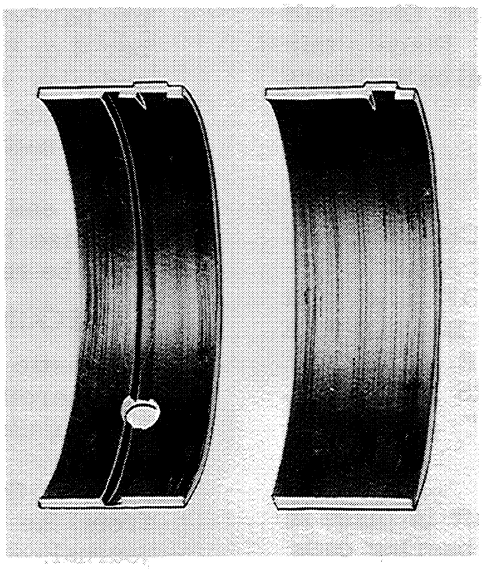

Figure M-45

cylinder block was cut off by the bearing. DO NOT INTERCHANGE BEARING LINER HALVES ON MAIN BEARINGS.

Figure M-46 illustrates diesel bearing liners that have been pitted by sulfuric acid resulting from too high a sulphur content in the fuel. This pitting is also caused by running the engine at a low engine coolant temperature.

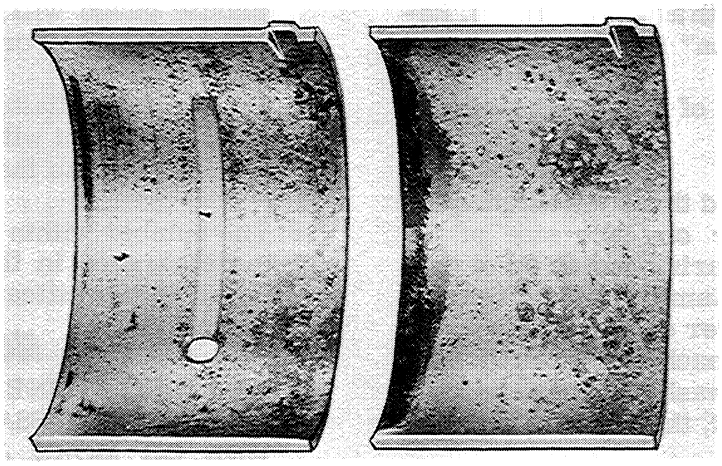

Figure M-46

ASSEMBLY AND INSTALLATION
Crankshaft-Rear Oil Seal
Timing Gear Cover-Crankshaft Pulley
(Refer to Figure M-47)

CRANKSHAFT

1. Install the main bearing liner upper halves in the block with the lock engaging the lock groove, refer to inset A, (liner half with oil groove in center). Place a thin film of light, clean engine oil on the liners and crankshaft journals.

CAUTION

THE BORE IN THE BLOCK AND THE BEARING CAPS MUST BE ABSOLUTELY CLEAN AND FREE OF DIRT OR GREASE. ANY DIRT LEFT BEHIND THE LINERS WILL INTERFERE WITH THE COOLING OF THE LINERS AND WILL RESULT IN "HOT-SPOTS" AND PREMATURE FAILURE.

2. Carefully set the crankshaft in place in the block and install the bearing caps and new liners with the lock engaging the lock grooves, refer to inset B. Lubricate the liners. The liners and crankshaft must be clean.

CAUTION

BE CERTAIN THE NUMBER STAMPED ON EACH CAP MATES WITH THE LINER ON THE BLOCK. THE NUMBERS ON THE CAPS MUST BE TOWARD THE CAMSHAFT SIDE OF THE ENGINE.

3. The main bearing capscrews must be tightened evenly with a torque wrench. Refer to "Specification" Section.

4. Check the end play of the main bearing as follows:

   The crankshaft end thrust is taken up by half washers; one on each side of the Number 3 main bearing cap on the 4 cylinder engine and Number 5 Main bearing cap on the 6 cylinder engine. The bearing cap is grooved on each side to fit the half washers. If the washers have become scored or damaged, the washers must be replaced.

   Measure end play with a feeler gauge or with a dial indicator. See inset C. Refer to "Specification" Section.

   To obtain an accurate reading, insert a pry bar between the crank throw and Number 4 or 6 main bearing cap. Take up all end play with the pry bar and check the clearance between the thrust washer and crankshaft flange.

5. If the end play cannot be taken up by the oversize thrust washers, the crankshaft must be replaced.

CHECKING BEARING CLEARANCE

A plastic gauge material manufactured commercially may be used for checking bearing clearances as follows:

1. Remove the bearing cap and wipe the oil from the bearing shell and crankshaft journal.

NOTE

WHEN CHECKING BEARING CLEARANCE DO NOT HAVE THE WEIGHT OF THE CRANKSHAFT ON THE BEARING CAPS.

2. Place a piece of plastic gauge full width on the bearing liner, refer to inset D.

3. Tighten the bearing cap to specified torque. Refer to "Specification" Section.

4. Remove the bearing cap. The flattened plastic gauge will be found either on the bearing shell or crankshaft.

5. Compare the flattened gauge material at its widest point with the scale that is furnished, refer to inset E.

6. The number within the graduation indicates clearance in thousandths of an inch. Refer to "Specification" Section.

NOTE

UNDERSIZE LINERS ARE AVAILALBE. IF IT IS NECESSARY TO GRIND DOWN ONE OR MORE JOURNALS IT IS ADVISABLE TO GRIND ALL THE JOURNALS.

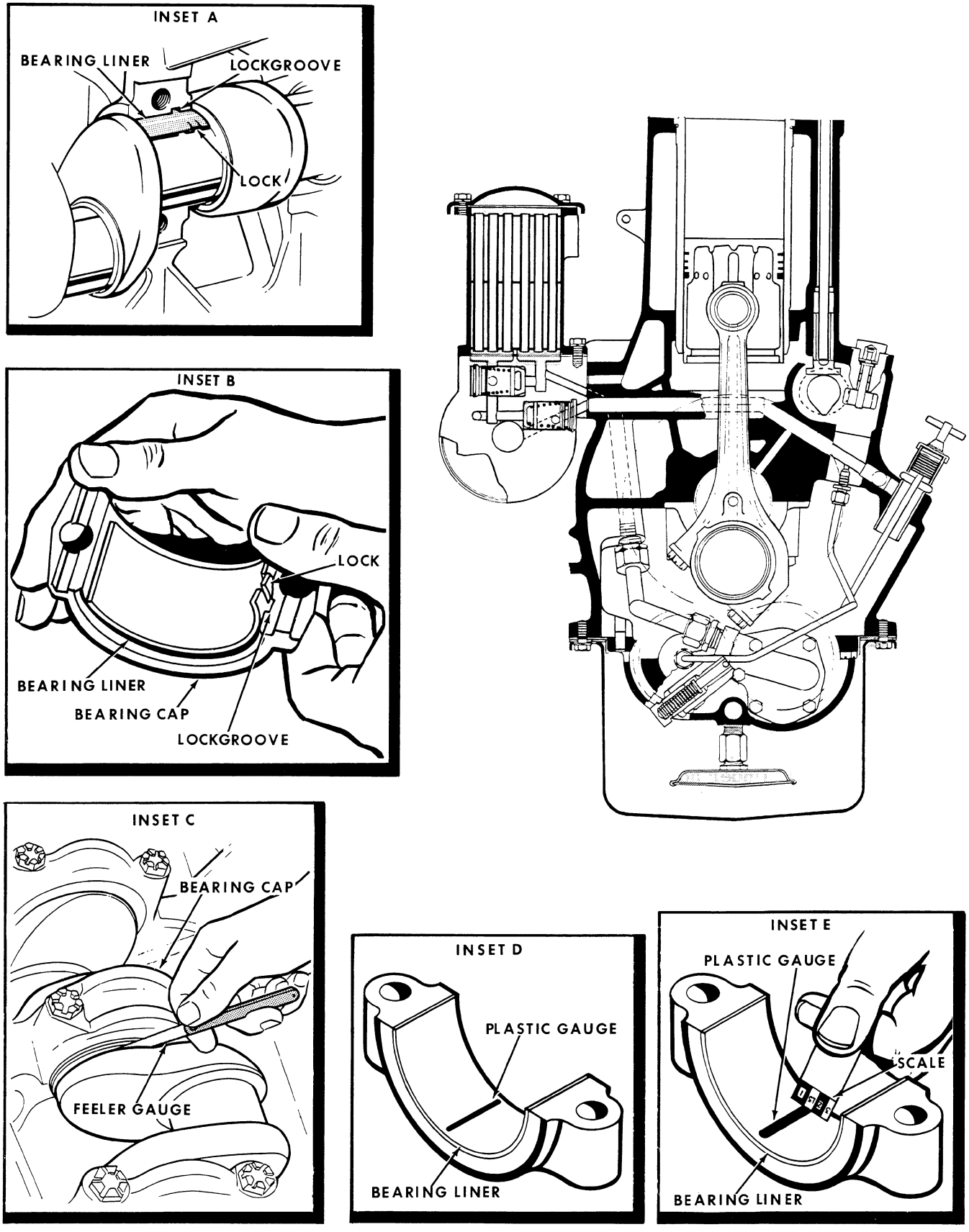
INSET A
BEARING LINER
LOCKGROOVE
LOCK
INSET B
LOCK
BEARING LINER
BEARING CAP
LOCKGROOVE
INSET C
BEARING CAP
FEELER GAUGE
INSET D
PLASTIC GAUGE
BEARING LINER
INSET E
PLASTIC GAUGE
SCALE
BEARING LINER

Figure M-47

ASSEMBLY AND INSTALLATION (CONT'D)
(Refer to Figure M-48)

CRANKSHAFT GEAR

1. The crankshaft gear on the front end of the shaft is keyed to the shaft and has an extremely tight press fit.

2. Use a pressing tool, inset A or equivalent to press the gear on the shaft. The tool screws into the threads in the front end of the crankshaft. A piece of tubing can be used to press against the gear. Check the backlash as described on Page M-40.

REAR OIL SEAL

1. Press a new seal squarely in the retainer with the lip facing the crankshaft. Coat the seal with Number 1 gun grease for initial lubrication when the engine is first started. A dry seal would be damaged immediately.

2. Install a new oil seal retainer gasket. On some installation there are two small gaskets to install.

FLYWHEEL RING GEAR

1. Remove the old gear by driving it off or breaking it and clean the surface of the flywheel carefully before installing a new gear in place.

2. Heat the new ring gear in oil to 350°. Do not heat the gear with a torch or the temper will be lost. Under no circumstances should the gear be heated until it is red.

3. Slip the gear into place on the flywheel until it bottoms against the flange. Be sure the beveled end of the gear teeth are facing the engine block.

4. Install the flywheel on the crankshaft flange and torque the flywheel mounting bolts evenly. Refer to "Specification" Section.

CHECKING FLYWHEEL HOUSING ALIGNMENT

1. Install flywheel housing and torque bolts.

2. Attach dial indicator to flywheel, refer to inset B. Turn crankshaft one revolution, run-out must not exceed .005". Repeat this operation several times. If run-out exceeds .005" remove and discard the line up bolts.

3. Loosen the remaining bolts just enough to allow the housing to be shifted the slight amount required to maintain run-out less than .005". Retorque the flywheel bolts.

4. Drill two 1/8" pilot holes, (refer to inset B) through the flywheel housing and mounting flange. Enlarge the holes with a letter size "U" (.368") drill.

5. Install standard 3/8" x 1-1/2" long dowel pins in these two holes and regular 1/2" x 2-1/2" long bolts and nuts in the original line up holes.

TIMING GEAR COVER

1. Press a new seal squarely into the timing gear cover with the lip facing inward. Coat the seal with Number 1 gun grease before installing it. This will provide initial lubrication to the seal.

2. Clean the gasket surface of the cover and the block thoroughly. Cement new gasket on the cover using Permatex or equivalent. Install the cover and tighten the bolts evenly.

IMPORTANT

BEFORE INSTALLING COVER MAKE SURE THE TIMING MARKS ARE ALIGNED AS SHOWN IN INSET C. MAKE SURE THE SPRING LOADED THRUST BUTTONS ARE IN PLACE AS INDICATED.

3. Check the accuracy of the timing pointer on the cover. Refer to Page M-44.

CRANKSHAFT PULLEY

1. Check the machined surfaces of the pulley for burrs or sharp edges that could damage the crankshaft front oil seal. Place thin film of engine oil on the machined surface before installation.

2. Insert the key in the crankshaft and align the keyway in the pulley with the key.

3. Carefully tap the pulley in place on the crankshaft using a wood block and a soft hammer. Install the washers and capscrews. Torque the capscrews evenly. Refer to "Specification" Section.

CAUTION CHECK THE OIL SEAL FOR LEAKAGE WHEN THE ENGINE IS RUNNING.

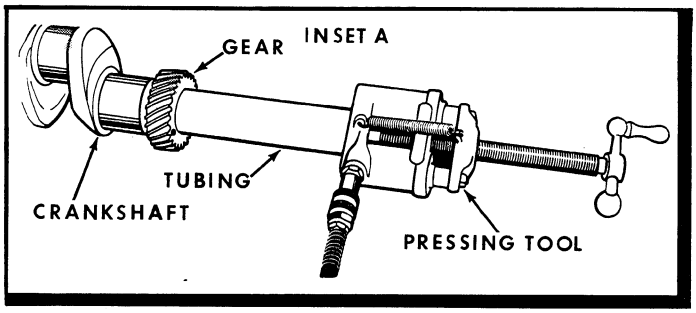

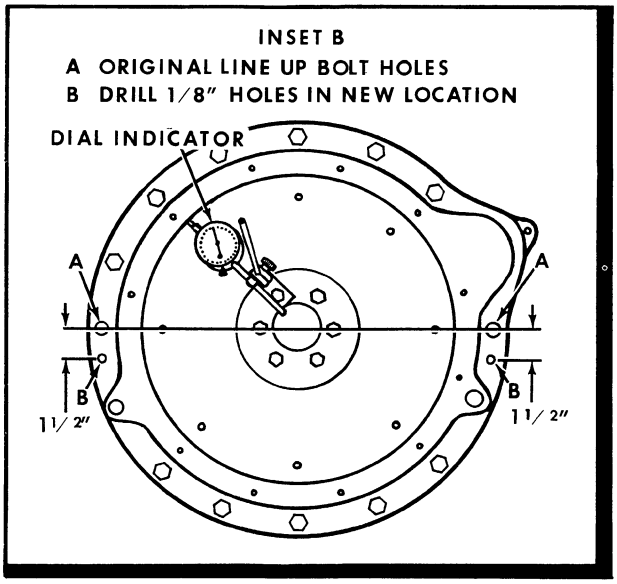

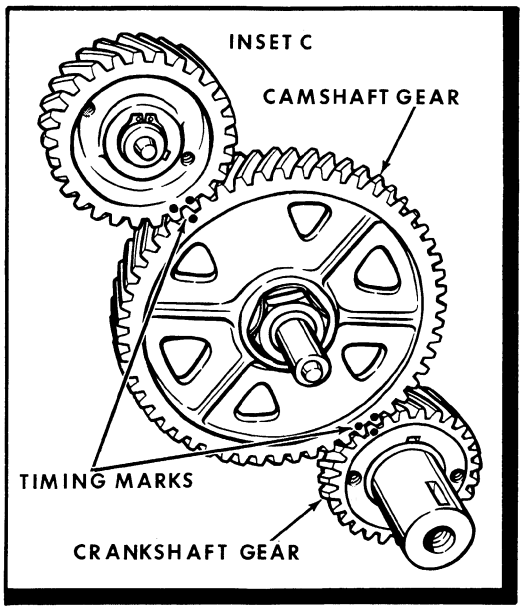

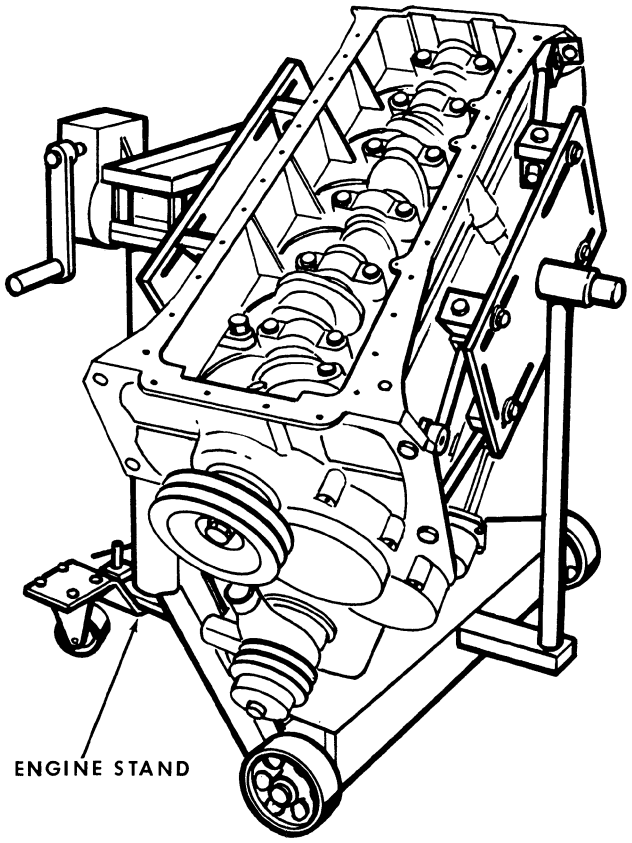

MODEL 1700B OWATONNA UNIVERSAL STAND

(Transmission, Engines, Axles, Clutches)

STAND CAN BE ORDERED FROM

J. I. CASE CO.
CENTRAL PARTS DIV.
RACINE, WISCONSIN

Figure M-48

REMOVAL AND DISASSEMBLY

Camshaft-Bushings-Push Rod Lifters

CAMSHAFT (Refer to Figure M-49)

1. Remove the oil pan, oil pump, crankshaft pulley, timing gear cover and rocker arm assembly.

NOTE

THE PUSH ROD LIFTERS WILL HAVE TO BE HELD IN THE RAISED POSITION SO THE CAMS WILL CLEAR THEM AS THE CAMSHAFT IS WITHDRAWN FROM THE ENGINE.

2. Make up 12 long round sticks slightly larger in diameter then the push rod. Taper the end of each stick and force the tapered end into the inner bore of each push rod lifter. The lifters can then be pulled up as far as possible with the sticks and the sticks locked in position with clothes pins.

BUSHING REMOVAL

1. Use the special arbor puller tool or equivalent, inset A, to remove and install the camshaft bushings, inset B. This tool should be used to prevent damaging the new bushing or damaging the block during the removal and installation operation. The bushings are the same diameter, but they are different lengths. See "Specification" Section.

CAMSHAFT GEAR

1. Remove the spring loaded thrust plunger and spring and bend the lip washer down. Remove nut.

2. Press the gear off the shaft.

INSPECTION

(Refer to Figure M-49)

Clean the camshaft thoroughly. Blow the camshaft oil holes out with compressed air.

Check the cam surfaces. They must be smooth with no rough spots, scoring, scratches or grooves. A badly worn or damaged camshaft must be replaced.

Check the camshaft bearing surfaces with a micrometer. The bearing surfaces are not all the same. Refer to "Specification" Section.

Inspect the gear for nicked, scored or broken teeth.

Check the thrust washer. Install a new one if it is badly worn or damaged. Check the thrust washer thickness. Refer to "Specification Section.

Check the bushings for scuff marks, grooves or pitting. Replace any damaged bushings. Check the inside diameter. Refer to "Specification" Section. If one bushing is worn, replace all of the bushings.

Remove the push rods and inspect them for straightness. Do not try and straighten a bent push rod. Install a new one. Keep them in the order they were removed.

Check the condition of the lifter and the bore in the block. If the lifter is scored, worn or damaged, install new lifters. If the bore is scored or grooved, it should be reamed. Refer to "Specification" Section. The lifters have oil holes in the side so the oil can drain from the rocker arm back to the crankcase.

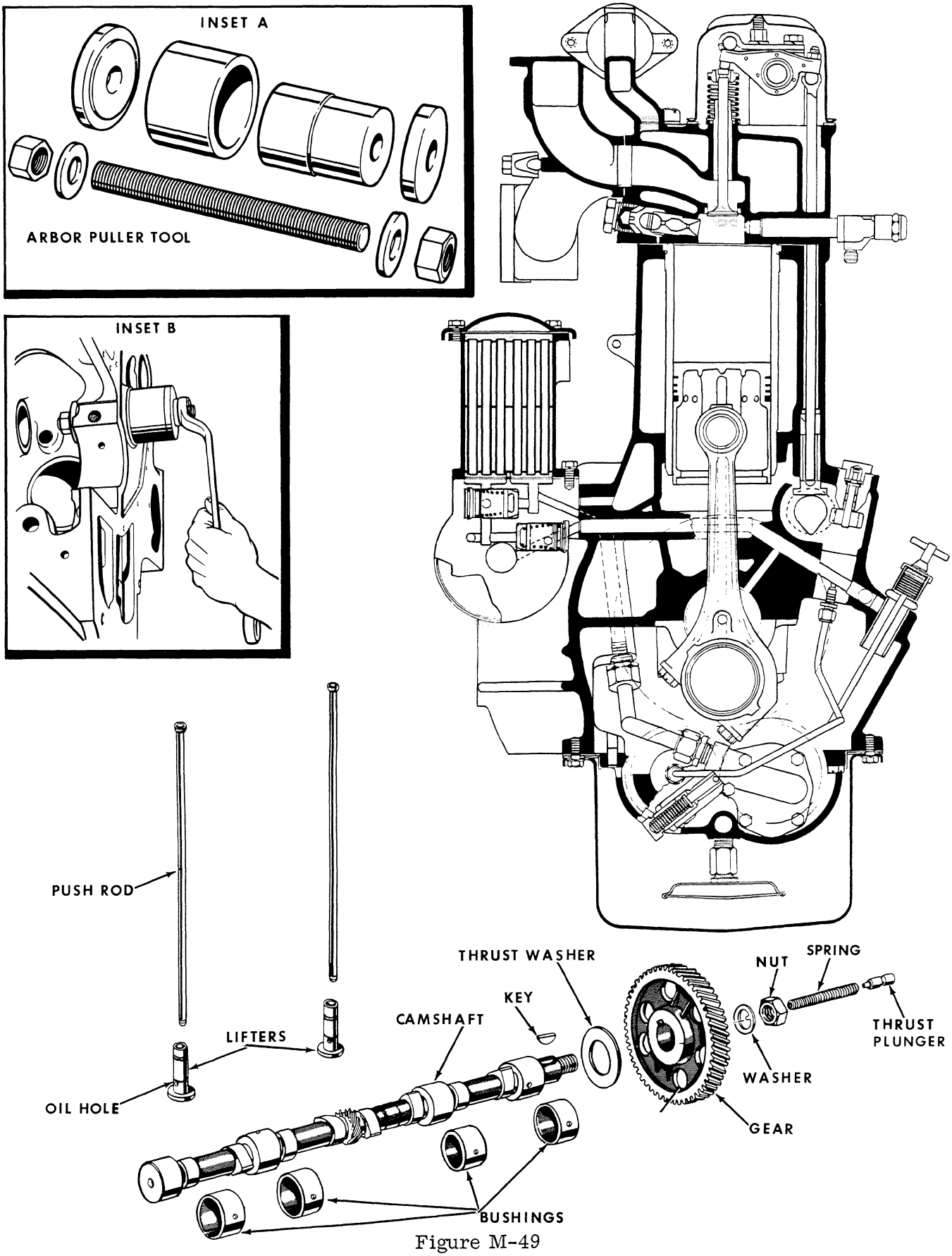
INSET A
ARBOR PULLER TOOL
INSET B
PUSH ROD
LIFTERS
OIL HOLE
CAMSHAFT
KEY
THRUST WASHER
NUT
SPRING
THRUST PLUNGER
WASHER
GEAR
BUSHINGS

Figure M-49

ASSEMBLY AND INSTALLATION

(Refer to Figure M-51)

1. Install a new key on the shaft, lubricate the gear and shaft, align the keyway in the gear and carefully press the gear on the shaft.

CAUTION

NEVER DRIVE A CAMSHAFT GEAR ON THE SHAFT. PRESS IT ON WITH THE CAMSHAFT REMOVED FROM THE ENGINE. IF AN ATTEMPT IS MADE TO DRIVE A CAMSHAFT GEAR ON THE SHAFT WITH THE SHAFT IN THE ENGINE, THE WELCH OR CUP PLUG AT THE REAR OF THE BLOCK WILL BE PUSHED OUT.

2. Torque the locknut. Refer to "Specification" Section. Bend the lip of the washer against the nut. Always install a new lip washer.

3. Press the camshaft bushings in the camshaft bore. See insets A and B. Be sure to align the oil holes in the bushings with the holes in the block.

4. Install the camshaft in the engine.

IMPORTANT

CAMSHAFT END PLAY IS TAKEN UP BY A SPRING LOADED THRUST BUTTON IN THE END OF THE CAMSHAFT AND ALSO BY A WASHER LOCATED BETWEEN THE DRIVE GEAR AND FRONT BEARING. BE SURE BOTH ARE IN PLACE AND IN GOOD CONDITION.

5. When the camshaft is installed, the timing marks must be aligned as shown in Figure M-50.

CHECKING BACKLASH

(Refer to Figure M-50)

Whenever a new camshaft gear is installed, check the crankshaft and injection pump drive (if equipped) gear teeth for excessive wear or damage. If the teeth are visibly damaged or worn, the gear or gears must be replaced.

Check the backlash between the camshaft gear and injection pump drive gear (if equipped).

Check the backlash between the camshaft gear and the crankshaft gear.

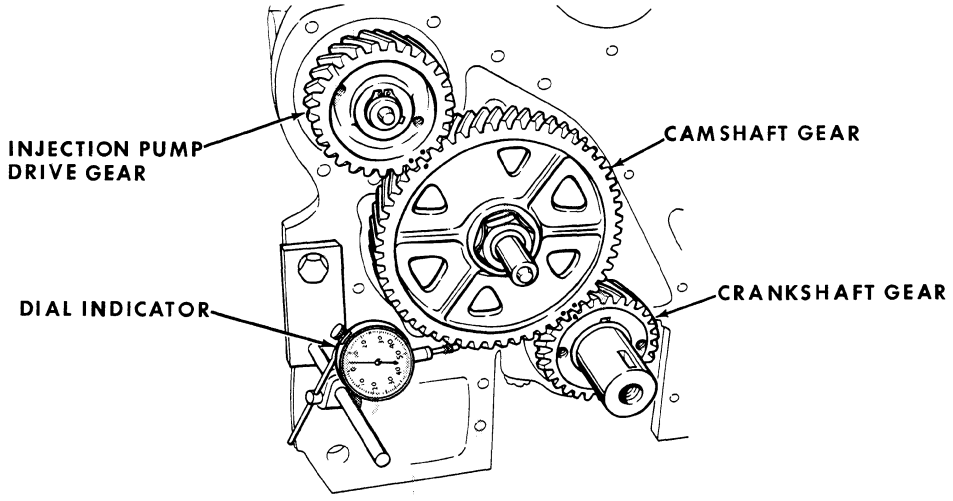

Figure M-50

If backlash is within specified limits, it will not be necessary to install a new crankshaft gear or injection pump drive gear (if so equipped) when the camshaft gear is replaced.

If backlash is more than specified at the loosest point, replace one or both gears contacting the camshaft gear.

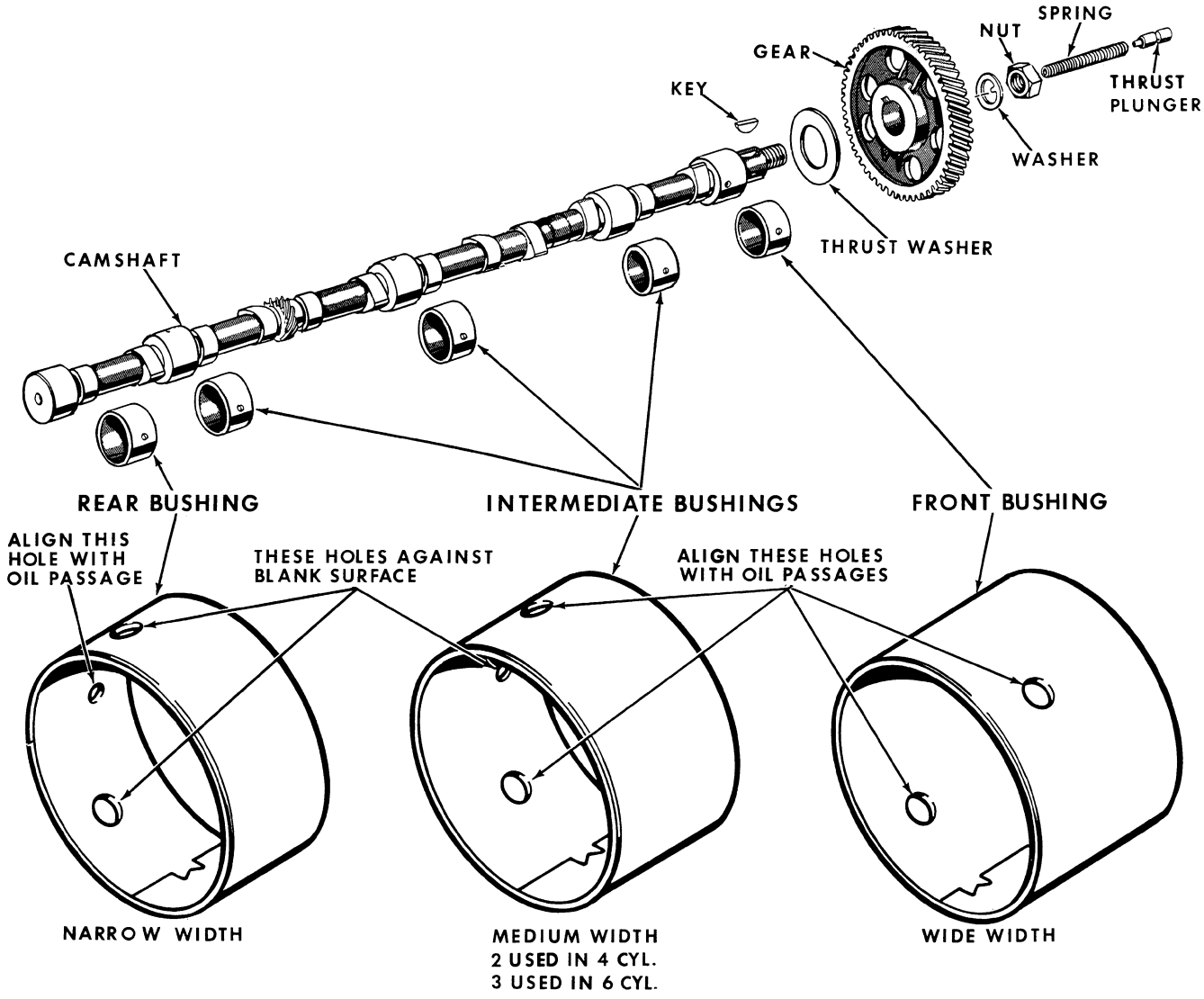
SPRING
NUT
GEAR
KEY
THRUST PLUNGER
WASHER
THRUST WASHER
CAMSHAFT
REAR BUSHING
INTERMEDIATE BUSHINGS
FRONT BUSHING
ALIGN THIS HOLE WITH OIL PASSAGE
THESE HOLES AGAINST BLANK SURFACE
ALIGN THESE HOLES WITH OIL PASSAGES
NARROW WIDTH
MEDIUM WIDTH
2 USED IN 4 CYL.
3 USED IN 6 CYL.
WIDE WIDTH

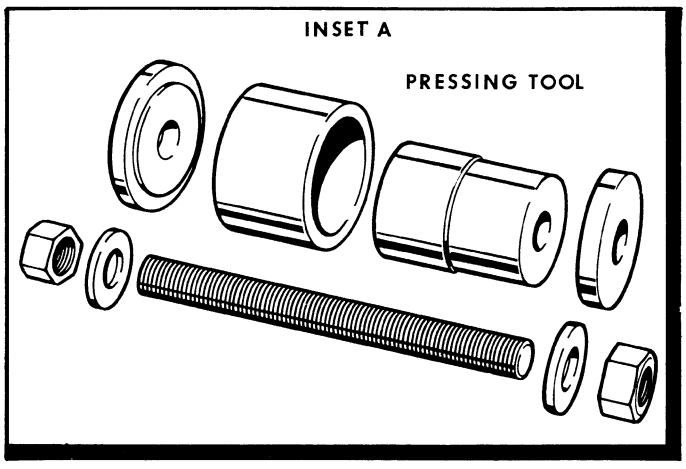
INSET A
PRESSING TOOL

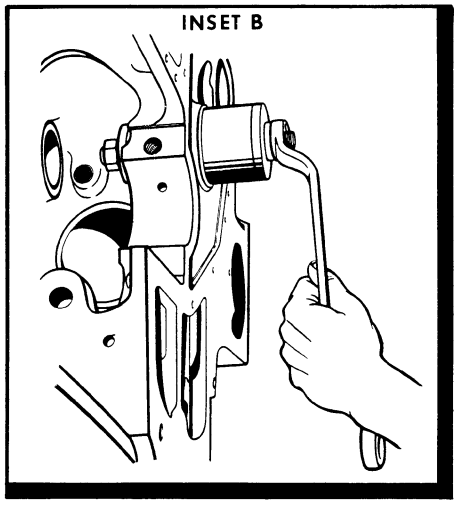
INSET B

Figure M-51

FUEL INJECTION PUMP DRIVE

(Refer to Figure M-52)

Removal and Disassembly

1. Remove the fuel injection pump as directed in the "Fuel Injection System" Section. Be sure the Number One piston is coming up on top dead center and the pointer is aligned with the correct mark on the crankshaft pulley. Refer to "Specification" Section.

2. If it is necessary to replace the drive shaft housing only or the drive shaft only, due to damage or wear, the complete drive shaft housing assembly can be removed without removing the timing gear cover.

IMPORTANT

IF THE DRIVE SHAFT GEAR MUST BE REMOVED THE TIMING GEAR COVER MUST BE REMOVED SO THE CONDITION OF THE OTHER TIMING GEARS CAN BE CHECKED AND THE BACKLASH BETWEEN THE GEARS CAN BE CHECKED.

3. Remove the bolts from the drive shaft housing and very carefully pull the housing away from the engine.

NOTE

IT MAY BE NECESSARY TO HOLD THE GEAR END OF THE DRIVE SHAFT AS THE HOUSING IS PULLED OUT, TO PREVENT THE SHAFT FROM PULLING THROUGH THE HOUSING.

4. Pull the housing rearward very carefully so that the spring loaded thrust plunger does not drop off the forward end of the drive shaft.

CAUTION

DO NOT DISTURB THE ENGINE SETTING WHILE THE INJECTION PUMP DRIVE IS REMOVED. IF THE ENGINE SETTING IS DISTURBED THE TIMING GEAR COVER MUST BE REMOVED.

5. The drive gear is keyed to the shaft and is locked in place by a snap ring. Remove the snap ring from the end of the shaft. The gear can either be pressed off the shaft or can be pulled off the shaft using the same puller used to remove the crankshaft pulley.

IMPORTANT

WHEN A NEW INJECTION PUMP DRIVE GEAR IS INSTALLED ALWAYS CHECK THE BACKLASH. SEE PAGE M-40.

INSPECTION

Wash the drive assembly in clean diesel fuel. Blow out the drilled oil passages in the shaft with compressed air.

Check the two bushings in the drive housing with an inside micrometer. See "Specification" Section. The bushings must be smooth without any scuff marks, signs of scoring and pitting. If the bushings are excessively worn, replace the housing.

Inspect the splines on the end of the drive shaft. If any teeth are worn excessively replace the shaft. The pump timing can be affected by excessive wear on the drive shaft. Check the bearing surface. See "Specification" Section.

Check the drive gear teeth carefully for excessive wear, cracks or damage of any kind. Replace if necessary.

Check the end of the thrust plunger for wear. Inspect the spring. Make sure the plunger is free in the bore of the shaft.

Check the thrust washer thickness with a micrometer. See "Specification" Section.

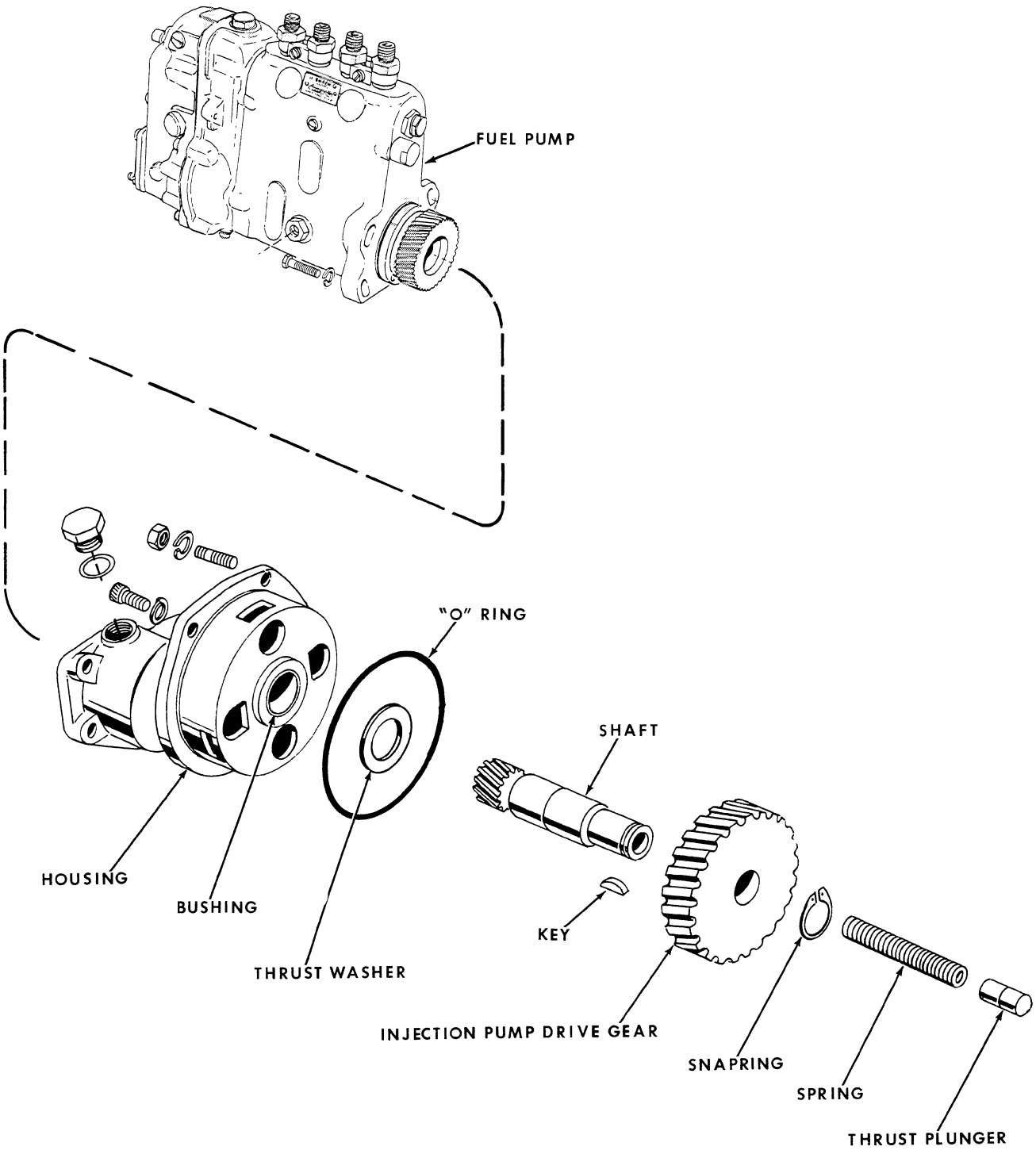
FUEL PUMP
"O" RING
SHAFT
HOUSING
BUSHING
THRUST WASHER
KEY
INJECTION PUMP DRIVE GEAR
SNAPRING
SPRING
THRUST PLUNGER

Figure M-52

ASSEMBLY AND INSTALLATION
(Refer to Figure M-53)

1. When installing the drive shaft and housing, install a new "O" ring on the housing, lubricate the machined surface that projects into the block and carefully install the housing.

2. When installing the housing on the block, be careful that the spring loaded thrust plunger does not drop into the engine. Tighten the three mounting bolts to the proper torque. Refer to "Specification" Section.

3. If it was necessary to remove the pump drive gear, the timing gear cover must be removed. When installing the pump drive gear, make sure the timing marks are aligned between the pump gear and the camshaft gear. See Inset A.

CHECKING TIMING POINTER ACCURACY

(Refer to Figure M-54)

If the timing pointer has been bent, damaged, new timing gear or crankshaft pulley installed, the accuracy of the pointer should be checked as follows:

Diesel Engines

1. Remove front valve cover and set Number 1 piston at top dead center on the compression stroke. Remove rocker arm assembly. Refer to "Valve System and Cylinder Head" section.

2. Remove the valve spring from Number 1 piston intake valve so the valve head is resting on the piston.

3. Place a dial indicator against the end of the valve stem. Determine top dead center of piston travel by carefully cranking engine and observing dial indicator.

NOTE

WHEN THE PISTON REACHES TOP DEAD CENTER, THERE IS A SHORT INTERVAL WHERE THE PISTON IS STATIONARY AS THE CRANKSHAFT THROW AND CONNECTING ROD CROSS OVER FROM THE COMPRESSION (UP) STROKE TO THE POWER (DOWN) STROKE.

4. Find the exact point on the compression (up) stroke where the dial indicator reading just starts to level out. (The piston has stopped raising).

5. Very carefully and slowly back the piston off (so it is traveling downward on what would be the compression stroke).

When the piston has traveled downward .334 of an inch, as indicated on the dial indicator, the piston is at 27 degrees before top dead center on the compression stroke.

When the piston has traveled downward .4363 of an inch, as indicated on the dial indicator, the piston is at 31 degrees before top dead center on the compression stroke.

When the piston has traveled downward .4919 of an inch, as indicated on the dial indicator, the piston is at 33 degrees before top dead center on the compression stroke.

If the pointer is not aligned for your particular engine, loosen the pointer capscrews and move the pointer into alignment.

Spark Ignition Engines

On spark ignition engines, the front cylinder head must be removed to measure the piston travel with a dial indicator. Other than this, the diesel engine instructions given above apply.

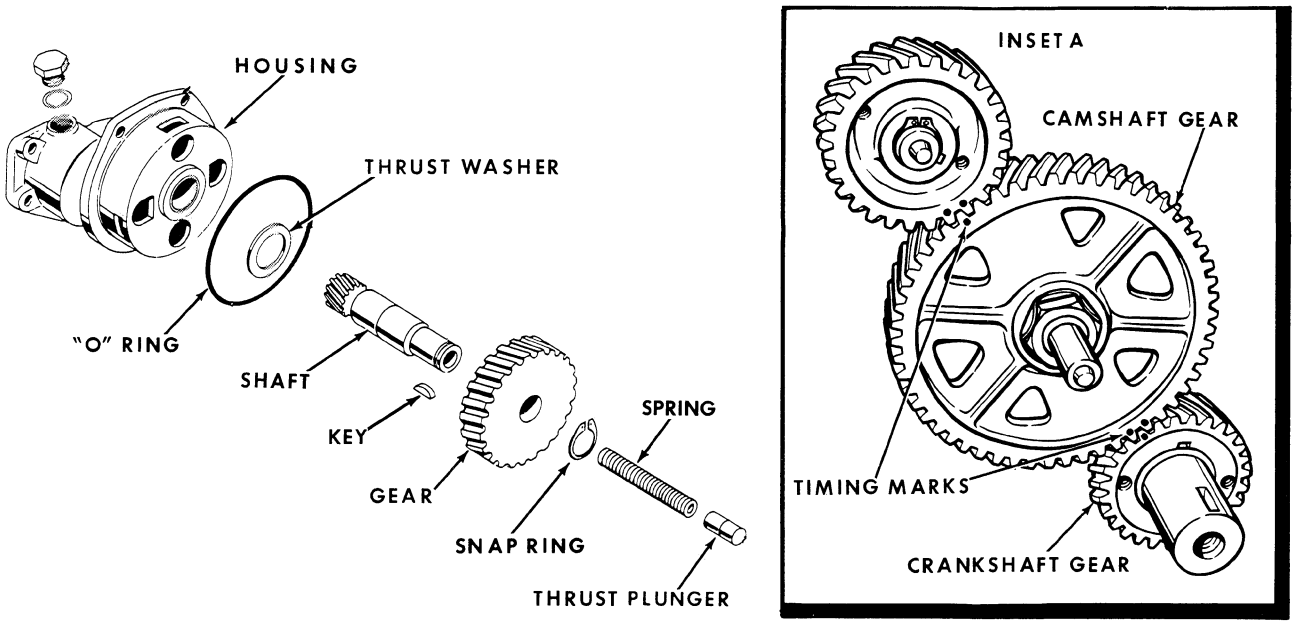

Figure M-53

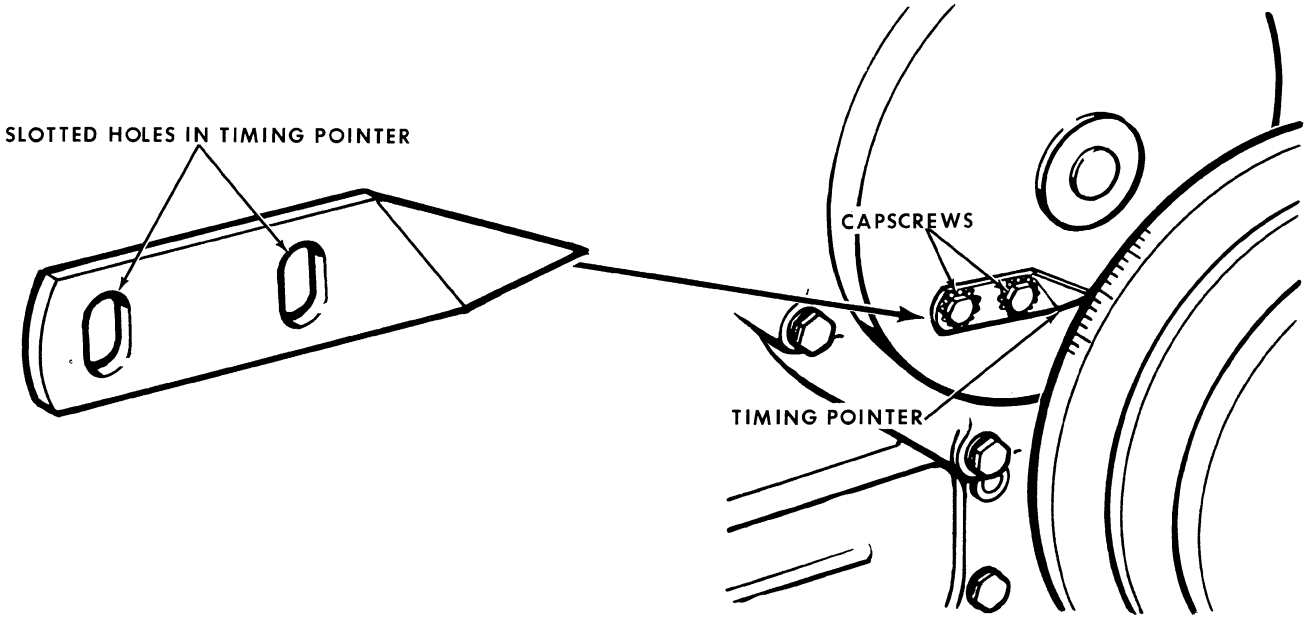

Figure M-54

NOTE: The CASE CORPORATION **reserves the right to make improvements in design or changes in specifications at any time without incurring any obligation to install them on units previously sold.**

SECTION

M

Supplement

SERVICING THE

FRONT MOUNTED OIL PUMP

Rac. Form 9-78012

PRINTED IN U.S.A.

TABLE OF CONTENTS

SPECIFICATIONS M-2
REMOVAL M-4
DISASSEMBLY M-4
INSPECTION M-6
ASSEMBLY M-6
INSTALLATION M-6

SPECIFICATIONS

Oil Pump	Gear Type with Screen
Normal Pump Pressure	40 to 50 lbs.
Drive Gear Thickness	1.250"
Drive Gear Shaft Length	3.250"
Driven Gear Thickness	1.250"
Driven Gear Shaft Length	2.250"
Radial Clearance	.002" to .006"
Gear To Cover Clearance	.002" to .005"
Oil Pump Gear to Crankshaft Gear Backlash	.006" to .011"

Relief Valve Spring

Total Coils	13
Wire Thickness	.067"
Minimum Inside Diameter	.469"
Compressed Height of 1.248"	15.5 to 17.5 lbs.

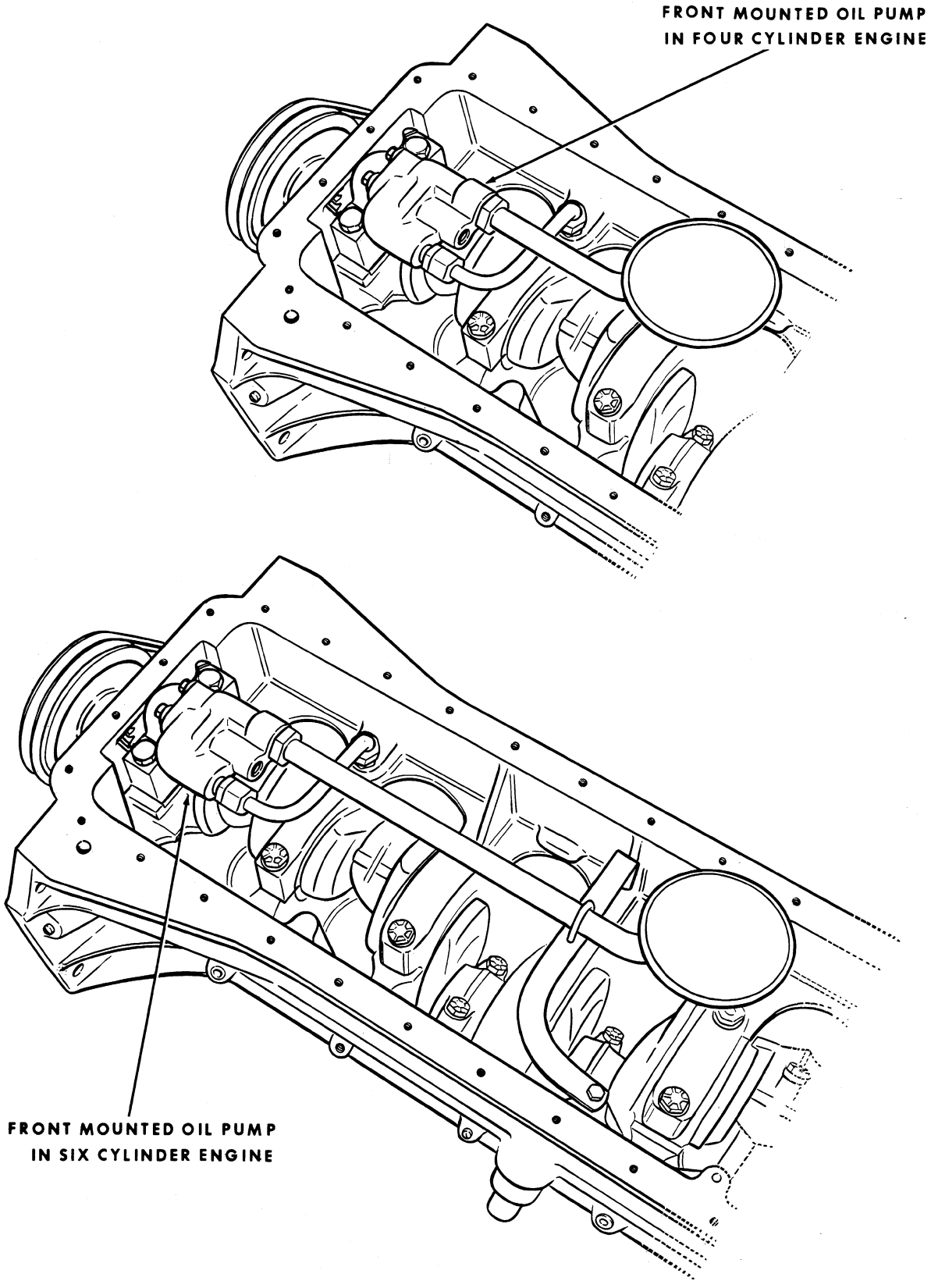
FRONT MOUNTED OIL PUMP
IN FOUR CYLINDER ENGINE
FRONT MOUNTED OIL PUMP
IN SIX CYLINDER ENGINE

Figure M-1

FRONT MOUNTED OIL PUMP

Removal And Disassembly

(Refer To Figure M-2 And M-3)

1. Drain the oil from the crankcase.

2. Remove the oil pan capscrews and drop the oil pan.

3. Thoroughly remove all gasket material from the oil pan and engine block surfaces.

4. Remove mounting bracket "U" bolt nuts (1) with lockwashers (6 cyl. engine only).

5. Remove fitting (20) and lift out tube and screen assembly (3).

6. Remove the front main bearing capscrews, loosen fittings (6 and 21), tilt the pump forward and lift out tube (5).

7. Lift out the oil pump assembly (26) and shims (25).

8. To disassemble the pump, remove capscrews (13 and 16) and separate the pump body.

9. If necessary, remove cup plug (19), relief spring (18) and relief valve (17).

10. The oil pump drive gear (14) is keyed (15) to the shaft and gear assembly (10) and must be removed with a press.

11. Gear and shaft assemblies (10 and 11) may be lifted out of the pump body.

Inspection

Thoroughly clean all parts and inspect for nicks, burrs, cracks or other damage. Small nicks and burrs may be removed with a hone or crocus cloth.

Excessively worn parts must be replaced.

Check driven gear and shaft assembly (11) for:

Shaft Length ---------- 2.250"
Gear Thickness ---------- 1.250"

Check drive gear and shaft assembly (10) for:

Shaft Length ----------3.250"
Gear Thickness ---------- 1.250"

Check Relief Valve Spring (18) for:
Total Coils ---------- 13
Wire Thickness ---------- .067"
Minimum Inside Diameter ------- .469"
Compressed to 1.248" -- 15.5 to 17.5 lbs.

Place the drive gear assembly (10) and the driven gear assembly (11) in the pump body (12) and check the radial clearance as shown in inset "A". More than .006" clearance requires a new pump assembly.

Place a strip of plastic gauge on the top of either gear as shown in inset "B". Position the cover (9) on the body (12) and torque the cover bolts (13 and 16) to 15 ft. lbs. Remove the cover bolts and cover and check the gear to cover clearance (Inset B). More than .005" requires a new pump assembly.

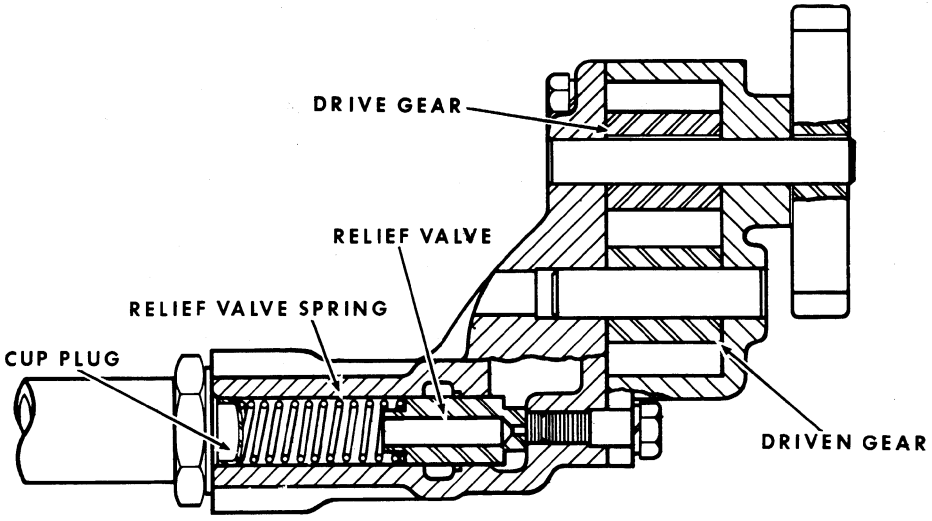

Figure M-2

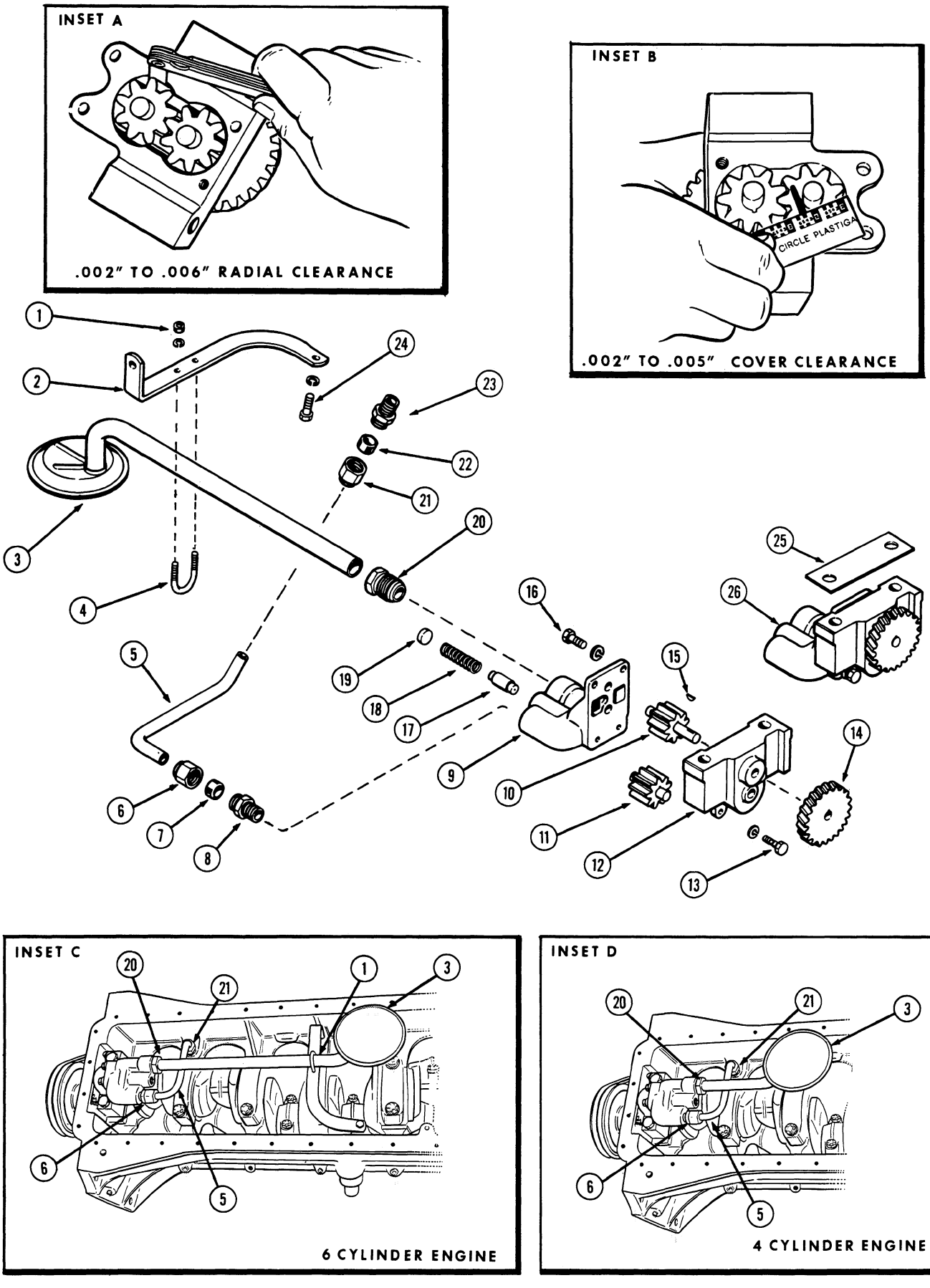
INSET A
.002" TO .006" RADIAL CLEARANCE
INSET B
CIRCLE PLASTIGA
.002" TO .005" COVER CLEARANCE
1
2
3
4
5
6
7
8
9
10
11
12
13
14
15
16
17
18
19
20
21
22
23
24
25
26
INSET C
6 CYLINDER ENGINE
INSET D
4 CYLINDER ENGINE

Figure M-3

Assembly And Installation

(Refer To Figure M-4 And M-5)

1. Insert the drive gear and shaft assembly (10) and the driven gear and shaft assembly (11) into the pump body (12).

2. Assemble the pump cover (9) to the pump body (12) and torque capscrews (13 and 16) to 15 ft. lbs.

3. Position key (15) and press on the oil pump drive gear (14) supporting the pump on the base of the drive gear shaft (10).

   IMPORTANT Clearance between the oil pump drive gear (14) and the oil pump body (12) must be .0035" to .0065".

4. If cup plug (19) was removed, install relief valve (17), spring (18) and drive in the cup plug with the tool shown in Inset "A".

   CAUTION Use of this type of tool is mandatory as incorrect location of the cup plug may result in too low or too high oil pressure.

5. Place a minimum of .030" shims (25) (available in .005", .010" and .025) on the pump body and install the pump. Hand tighten the capscrews and check the oil pump drive gear (14) for a slight amount of play (up and down). Rotate the oil pump drive gear (14) 180° and check again for play.

6. If there is no play in the oil pump drive gear (14), remove the pump assembly (26) and install as many shims (25) as required to keep the oil pump drive gear teeth from binding in the crankshaft gear.

7. With sufficient shims (25) installed to prevent binding, torque the capscrews to 150 ft. lbs. and check the gear backlash using a magnetic base dial indicator as shown in Inset B. Backlash of .006" to .011" is acceptable. Add or remove shims as required.

8. After proper backlash is obtained, loosen the front main bearing capscrews and install tube (5) with fittings (6 and 21). Retorque the capscrews to 150 ft. lbs.

9. Install tube and screen assembly (3) with fitting (20) and torque to 100 ft. lbs.

10. On six cylinder engines, the tube and screen assembly (3) is secured with a "U" bolt (4) to the mounting bracket (2) with nuts and washers (1). Four cylinder models do not require the support bracket.

11. Using Permatex or its equivalent, position a new oil pan gasket and install the oil pan. Torque the capscrews 35-40 ft. lbs. Refill the crankcase to proper level with clean oil

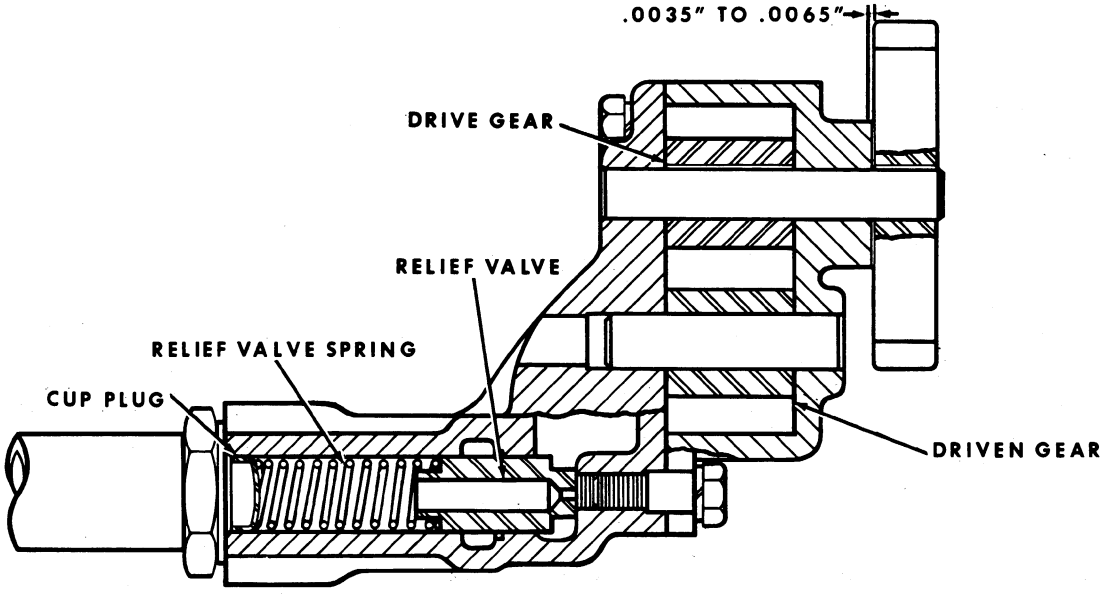

Figure M-4

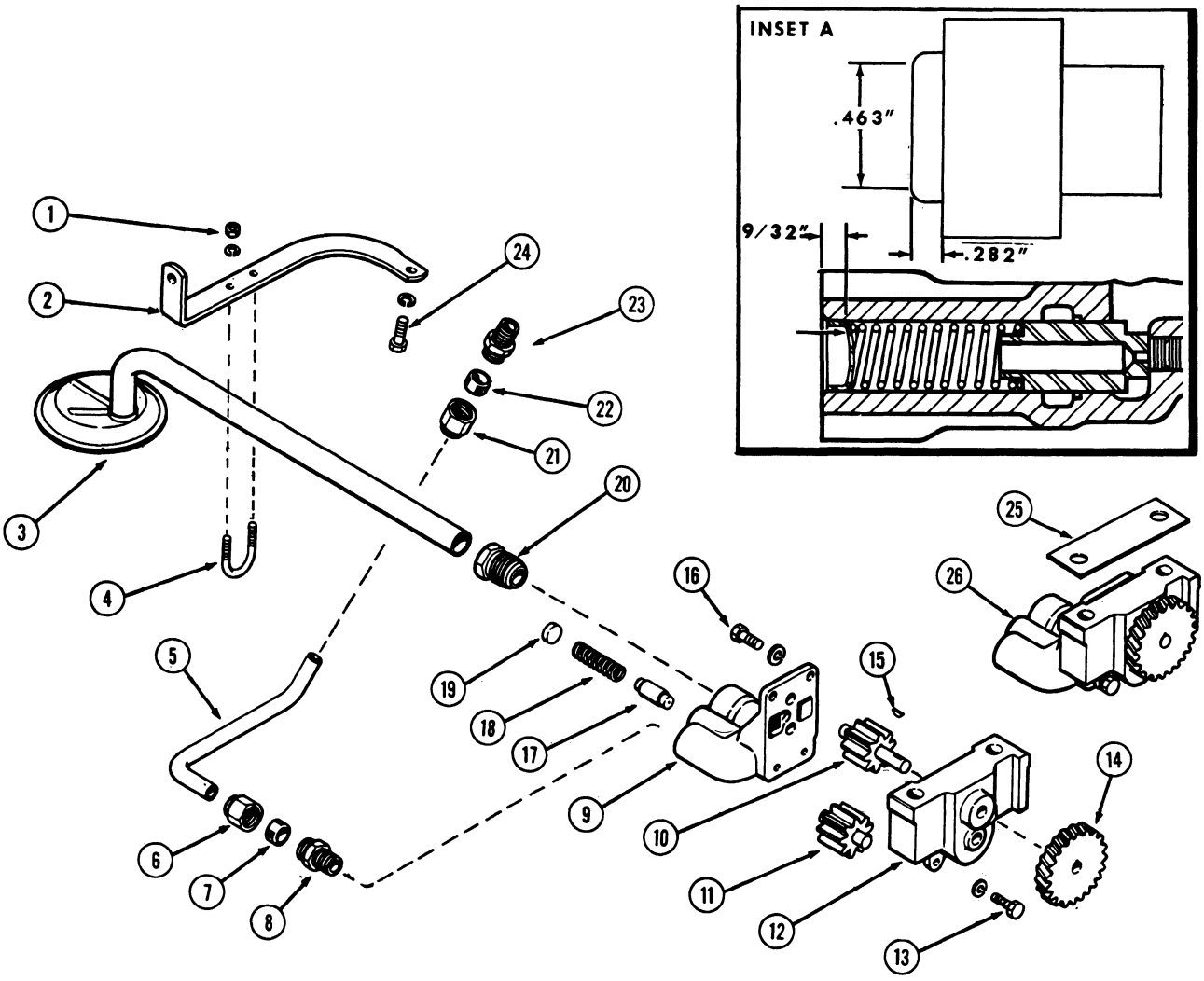
INSET A
.463"
9/32"
.282"
1
2
3
4
5
6
7
8
9
10
11
12
13
14
15
16
17
18
19
20
21
22
23
24
25
26

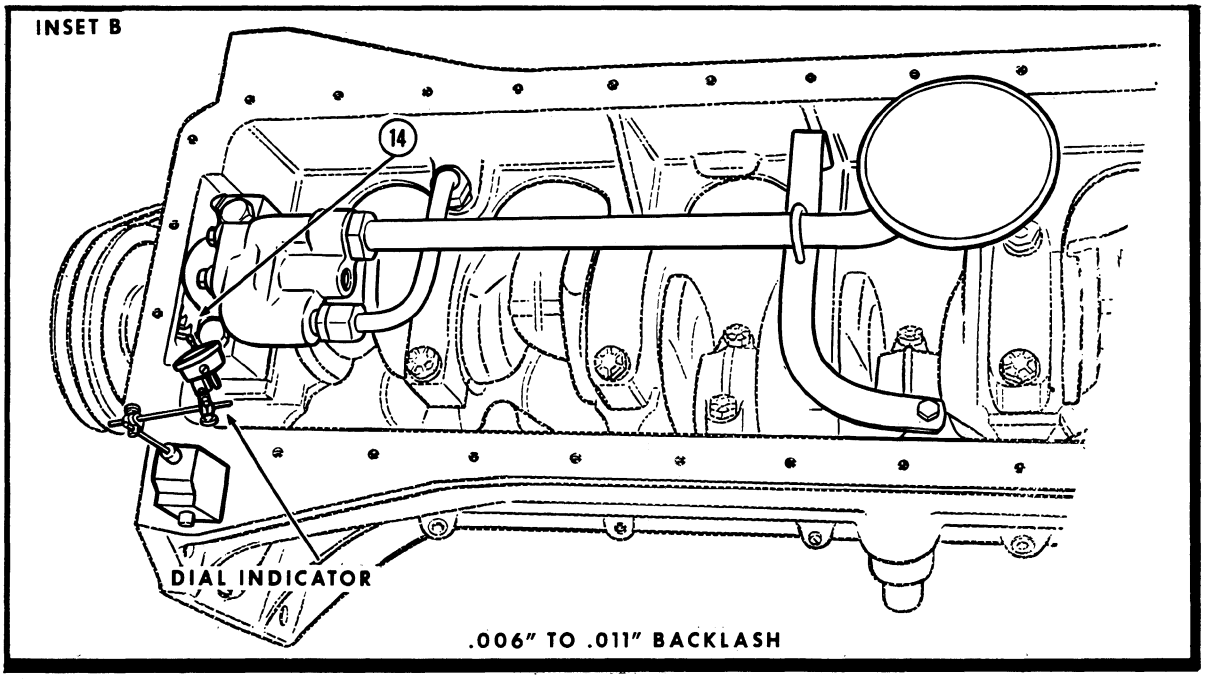
INSET B
14
DIAL INDICATOR
.006" TO .011" BACKLASH

Figure M-5

SECTION

MM

SERVICING THE

ENGINE COUNTER BALANCER

PRINTED IN U.S.A.

TABLE OF CONTENTS

ENGINE LUBRICATING SYSTEM . . . . . MM-4 thru MM-7

INTRODUCTION MM-8

OIL PUMP SCREEN REMOVAL AND INSTALLATION MM-9

OIL PUMP COVER REMOVAL AND INSTALLATION MM-9

ADJUSTING OIL PUMP RELIEF VALVE PRESSURE MM-11

BALANCER REMOVAL AND DISASSEMBLY . . . . . MM-12 and MM-13

INSPECTION OF OIL PUMP AND BALANCER . . . . . MM-14 and MM-15

ASSEMBLY OF THE BALANCER . . . . . MM-16 thru MM-18

INSTALLATION OF THE BALANCER IN THE ENGINE MM-19

REMOVAL AND INSTALLATION OF THE BALANCER DRIVE GEAR ON THE CRANKSHAFT MM-20

IMPORTANT CAUTION

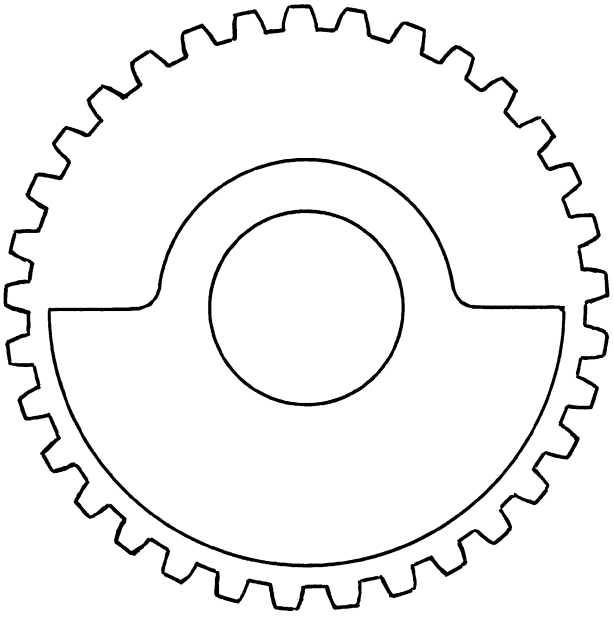

Figure MM-1. Diesel Balancer Counterweight

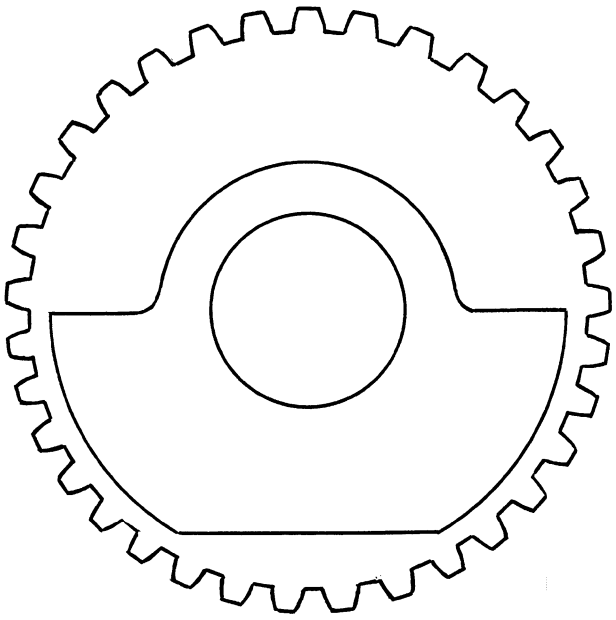

Figure MM-2. Spark Ignition Balancer Counterweight

THE COUNTERWEIGHTS IN THE DIESEL BALANCER, FIGURE MM-1, ARE DIFFERENT IN APPEARANCE THAN THE COUNTERWEIGHT IN THE SPARK IGNITION BALANCER, FIGURE MM-2, BECAUSE OF THE WEIGHT DIFFERENTIAL. THE WEIGHTS ALSO HAVE DIFFERENT PART NUMBERS, THE SERVICE PROCEDURE HOWEVER, IS THE SAME FOR BOTH THE DIESEL AND SPARK IGNITION BALANCERS UNLESS OTHERWISE INDICATED.

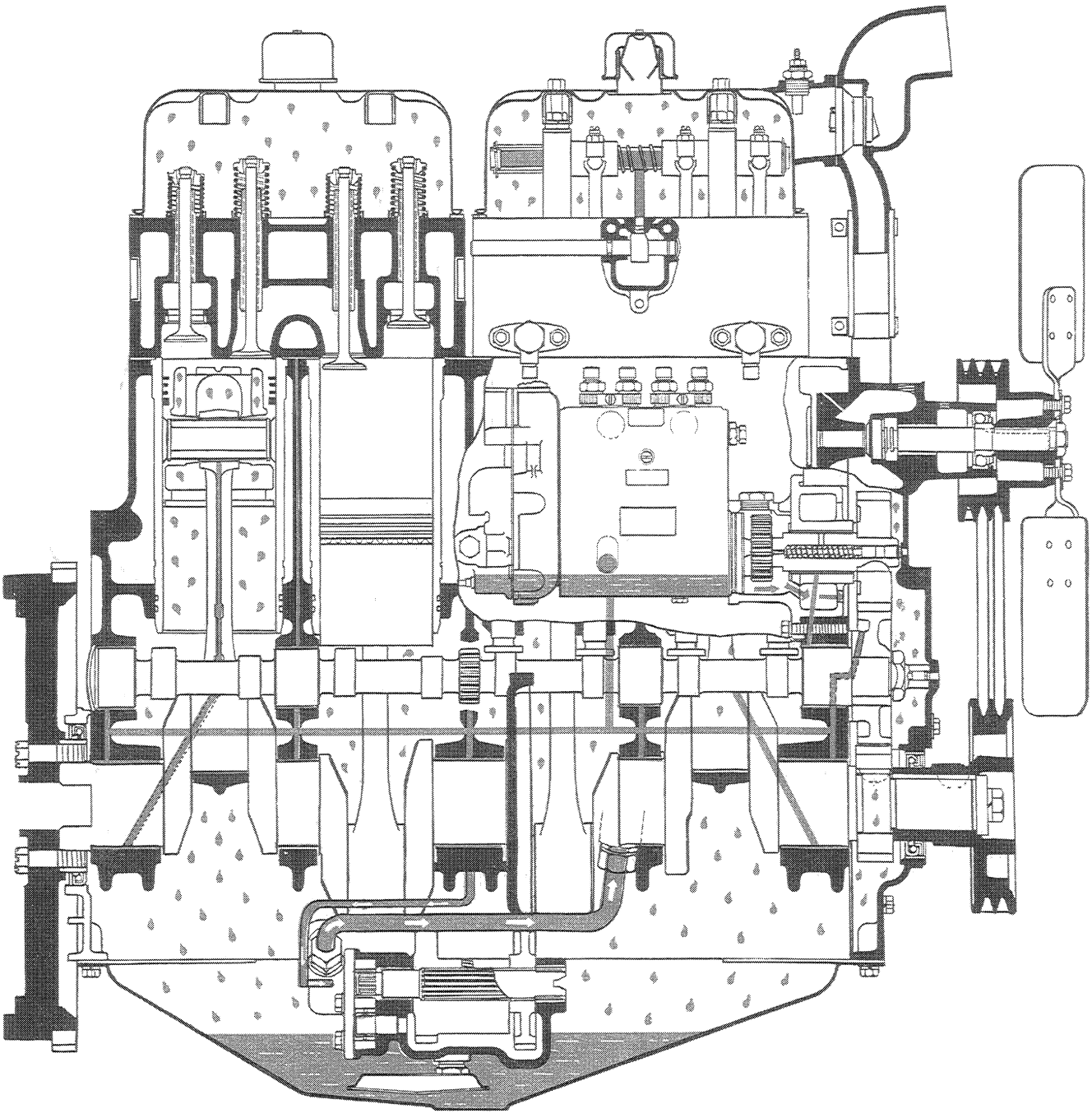

Figure MM-3. Typical Example of Case A-301 Series Diesel Engine Pressure and Spray Lubrication System

Normal Oil Pressure ---------- 40 to 45 Pounds Pressure (Oil Warm, Engine Operating at Full Governed Speed).

Oil Pump Relief Valve ---------- Adjustable

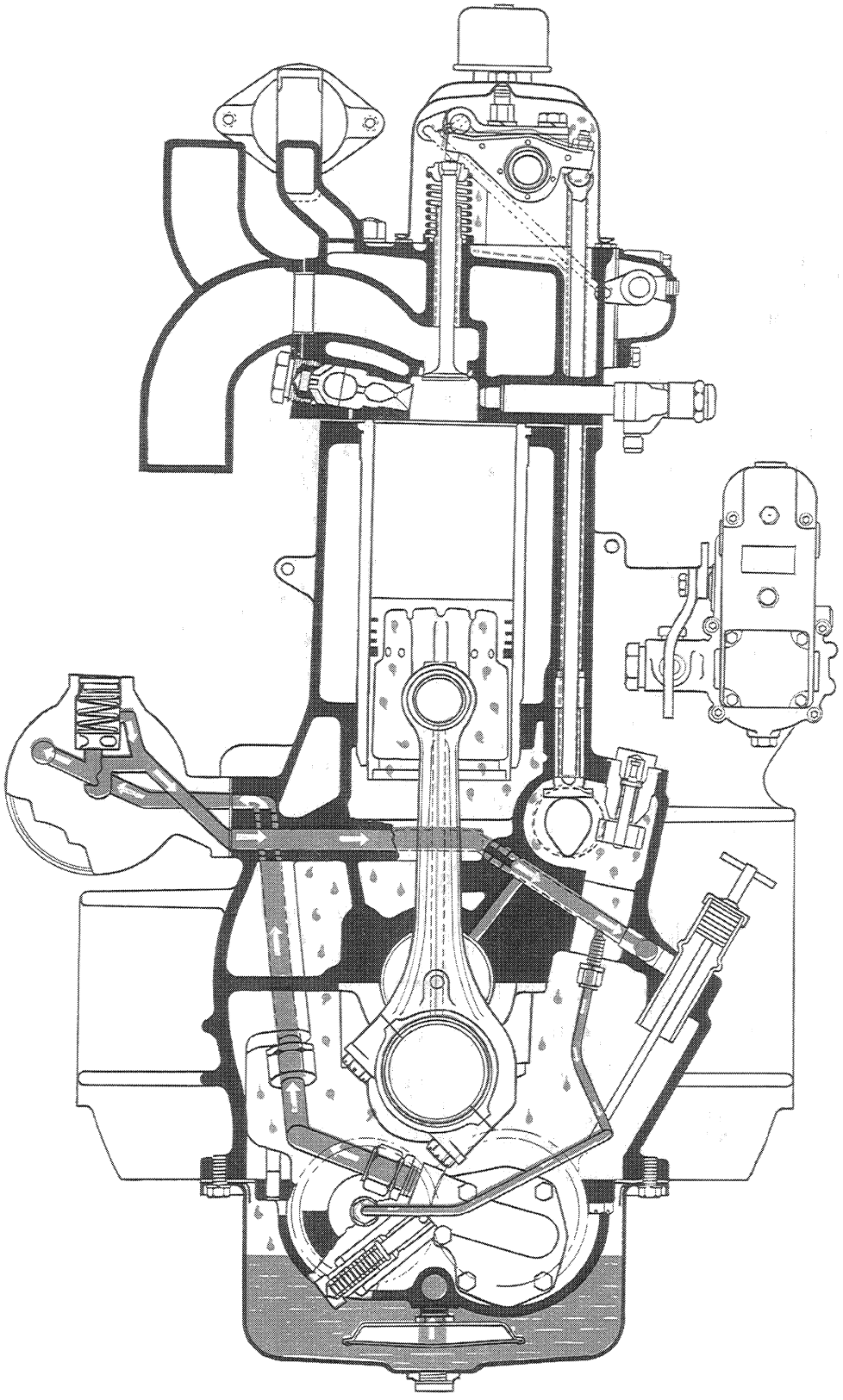

Figure MM-4

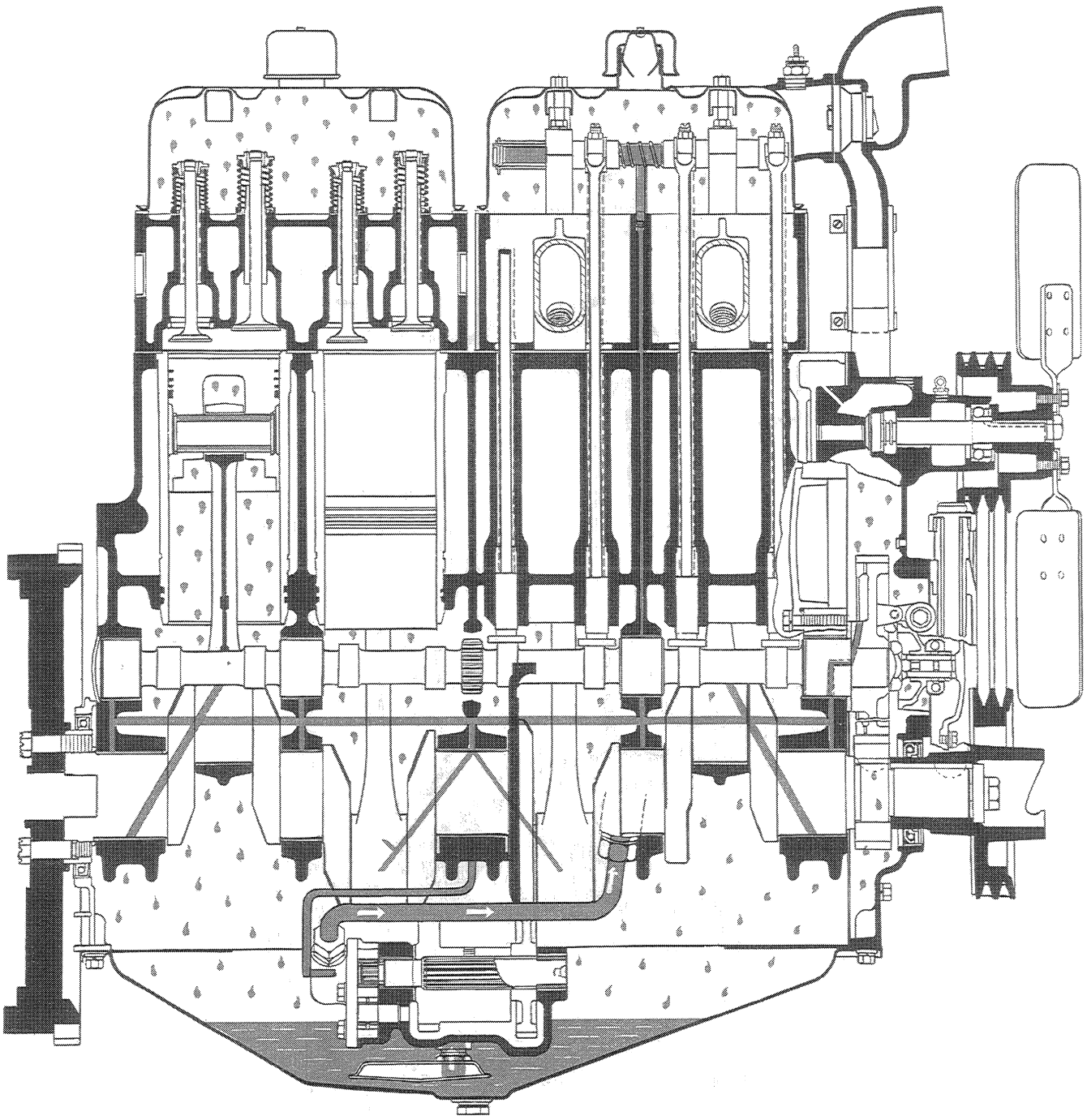

Figure MM-5. Typical Example of Case A-284 Series Spark Ignition Engine Pressure and Spray Lubricating System

Normal Oil Pressure ---------- 40 to 45 Pounds Pressure (Oil Warm Engine Operating at Full Governed Speed).

Oil Pump Relief Valve ---------- Adjustable

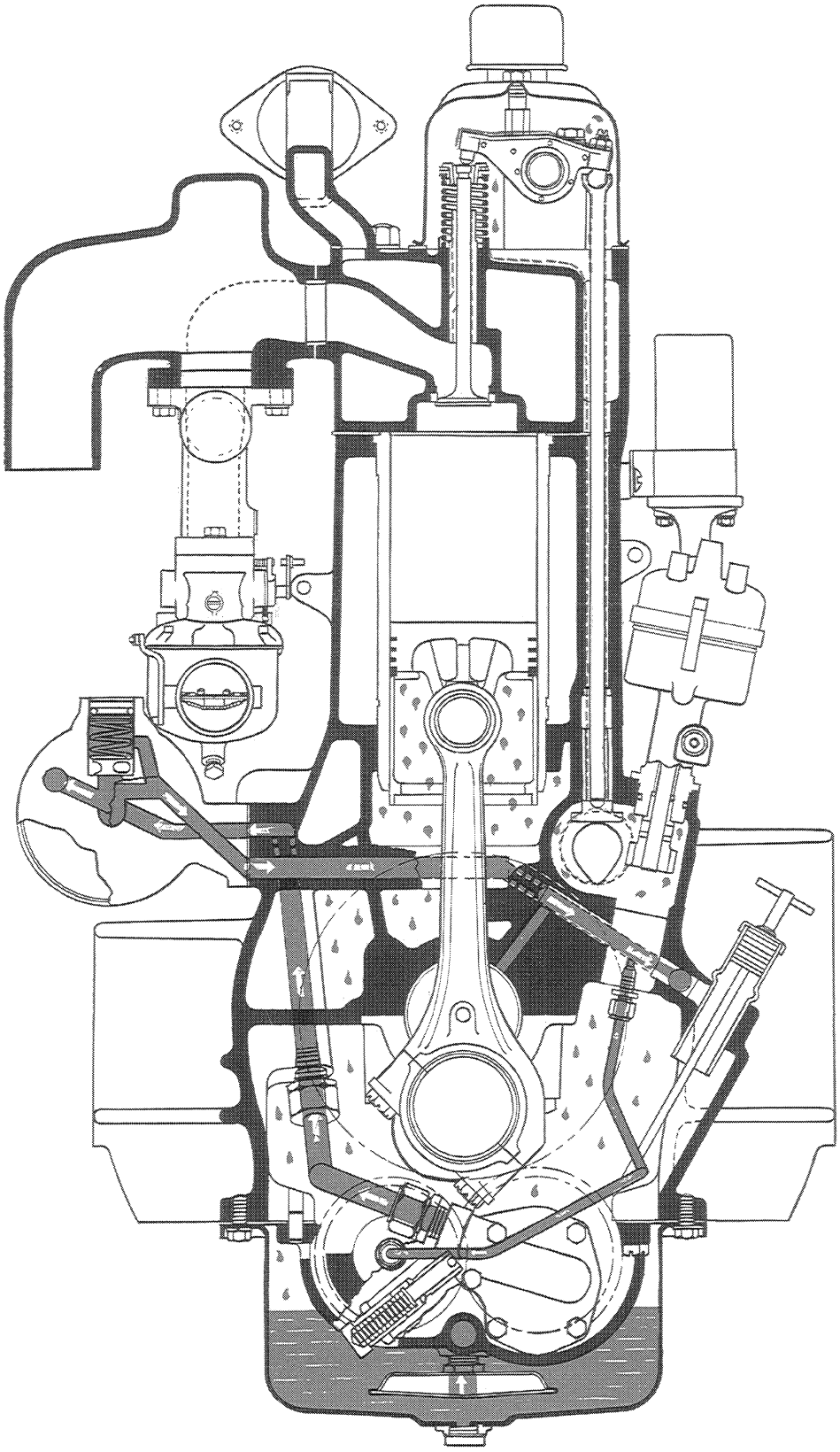

Figure MM-6

ENGINE COUNTER BALANCER

Introduction

The Case A-284 and A-301 Series Engine is equipped with an inertia balancer to counteract the secondary forces created by piston acceleration.

Although the two sets of pistons in a four cylinder "in line" engine are equal in weight and move in opposite directions, their vertical inertia forces do no completely neutralize one another. Since the secondary forces which tend to limit the smoothness of an engine occur at twice the speed of the engine -- these vertical forces can be cancelled by rotating two counterweights at twice the speed of the crankshaft.

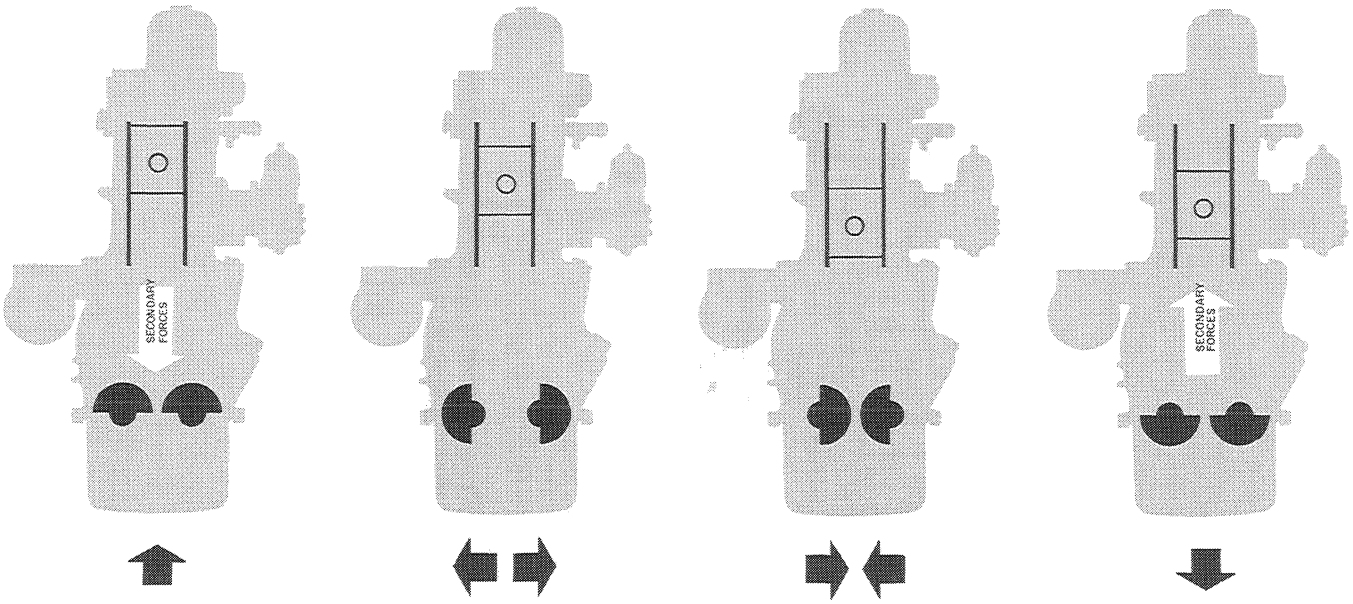

When the total secondary force is downward, it is counteracted by the two counterweights exerting an equal upward force.

When the secondary forces are cancelled out due to the position of the pistons - the counterweight forces are also cancelled out due to their position - only the natural inherent balance of the engine exists.

When the total secondary force is upward, it is counteracted by the two counterweights exerting an equal downward force.

Figure MM-7

This inertia balancer should not be confused with a torsional dampener which is incorporated in some engines to reduce the torsional stress in the crankshaft. Torsional dampeners are generally mounted on the front end of the crankshaft and release the twisting forces in the crankshaft. A torsional dampener is installed to prevent a possible fatigue of the crankshaft and not as a means of reducing secondary inertia forces.

OIL PUMP AND BALANCER

Oil Pump Screen Removal and Installation

Tools Required-General Shop Service Tools

1. Drain the crankcase, and remove the oil pan.

2. Remove the screen from the balancer housing, Figure MM-8.

3. Clean the screen thoroughly in fuel. Blow it out with compressed air.

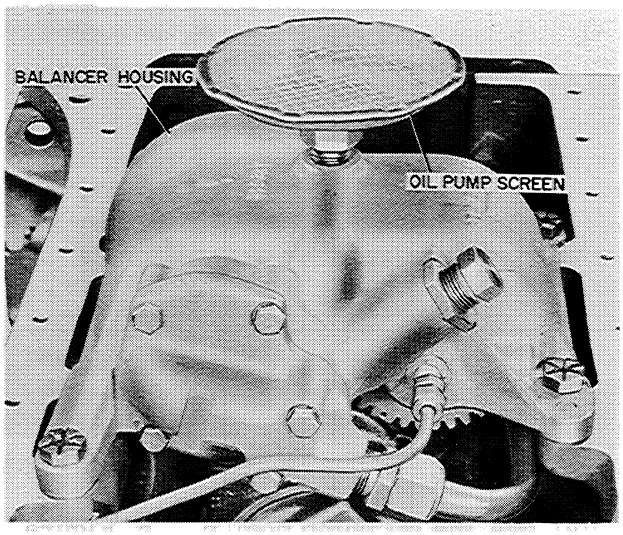

Figure MM-8. Oil Pump Screen

Oil Pump Cover Removal and Installation

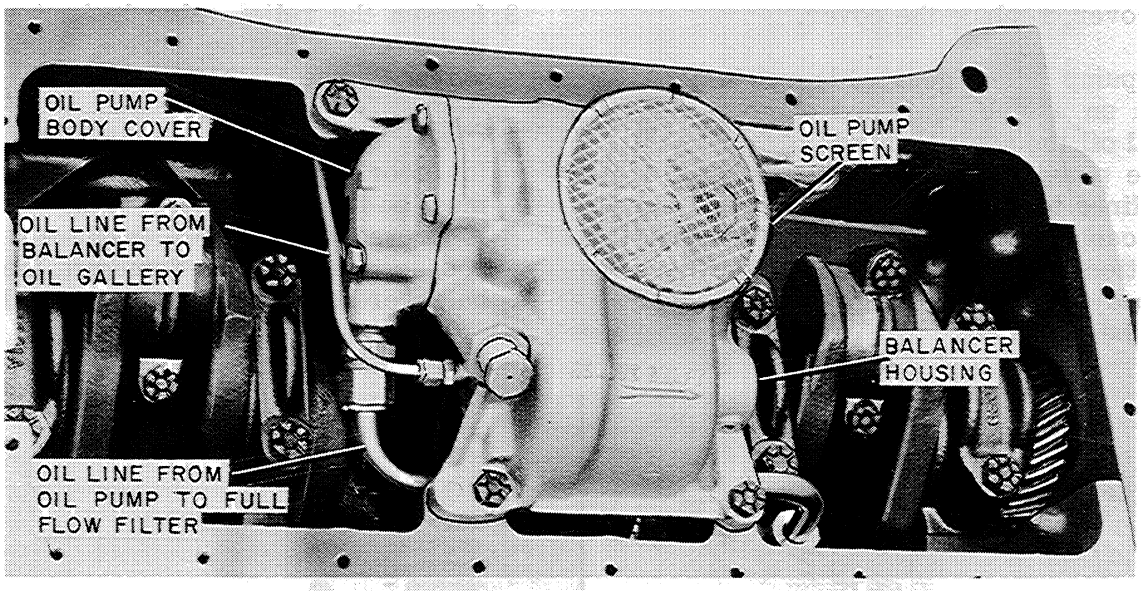

Figure MM-9

1. Drain the crankcase and remove the oil pan.

2. Remove the oil line from the oil pump to the full flow filter, Figure MM-9.

3. Remove the smaller oil line from the balancer to the oil gallery, Figure MM-9.

4. Remove the five capscrews from the oil pump body cover.

5. When the pump is installed, tighten the capscrews to 15 foot pounds.

Oil Pump Inspection and Service

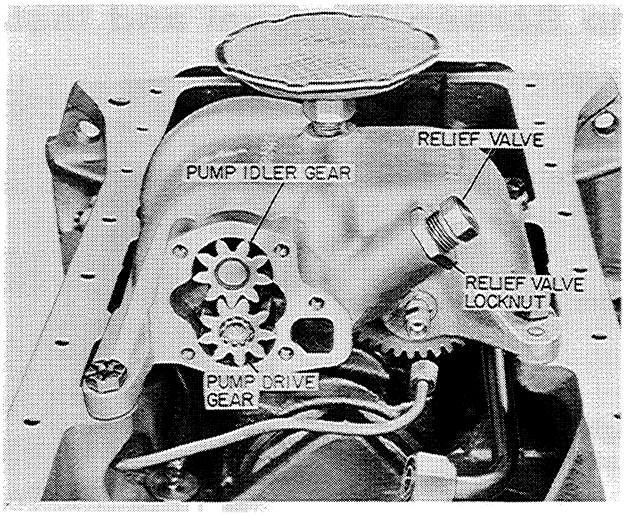

Figure MM-10

1. Remove the oil pump body cover, Figure MM-10. The cover is a ground-lapped fit to the body. No gasket is necessary.

   If either of the two oil pump gears have caused excessive wear on the surface of the cover, replace the cover.

2. The pump idler gear, Figure MM-10, floats on a stub shaft and can be easily pulled off the shaft by hand.

   The pump drive gear, Figure MM-10, is splined to the balancer drive shaft and also can be easily pulled out. Check the condition of the gear teeth. If they are chipped or damaged in any way, the gear must be replaced.

   NOTE If the gears are worn excessively, it is almost certain that the pump body is worn. In this case, replace the complete balancer housing.

3. Loosen the relief valve locknut and remove the adjusting screw, spring and valve, Figure MM-10.

   Check the valve and pump body recess for scoring, pitting or gouges. The valve must be free in the body. If the valve only is scored or damaged, replace it. If the recess in the body is damaged, the entire balancer housing must be replaced.

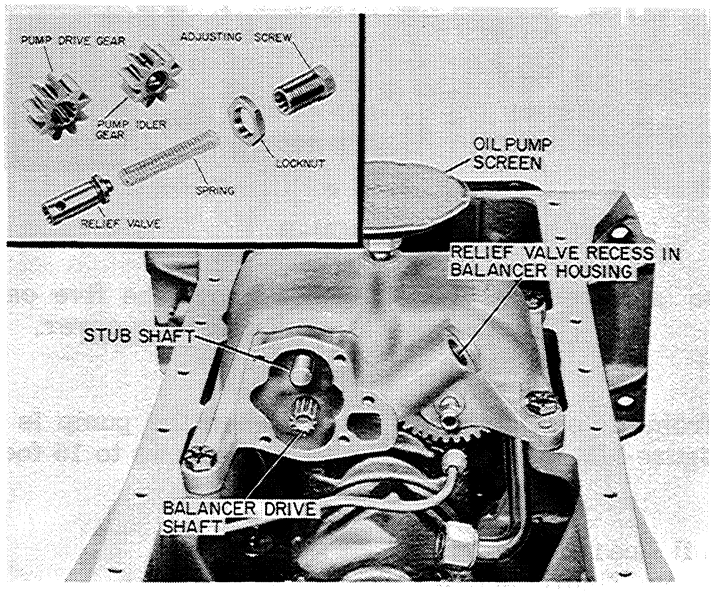

Figure MM-11

Adjusting Oil Pump Pressure Relief Valve

IMPORTANT REPLACEMENT BALANCER HOUSINGS HAVE THE PRESSURE RELIEF VALVE ADJUSTED AT THE FACTORY. IT SHOULD NOT BE NECESSARY TO DISTURB THIS ADJUSTMENT.

ONE COMPLETE TURN OF THE RELIEF VALVE ADJUSTING SCREW WILL MAKE A DIFFERENCE OF APPROXIMATELY 3 POUNDS PER SQUARE INCH OIL PRESSURE.

Turn the adjusting screw in to increase the pressure.

If the pressure relief valve has been removed, the following procedure should be used to reset the pressure to 40 to 45 pounds.

1. Turn the screw in until the underside of the head is 1/2 inch from the boss on the pump body, Figure MM-12.

2. Tighten the lock nut.

3. Reinstall the oil pan, refill the crankcase, start the engine and check the oil pressure gauge reading.

   When the lubricating oil is warm and the engine is operating at full governed speed, the pressure should be between 40 to 45 pounds.

4. If the pressure is low, the oil pan must be removed and the adjusting screw turned in accordingly.

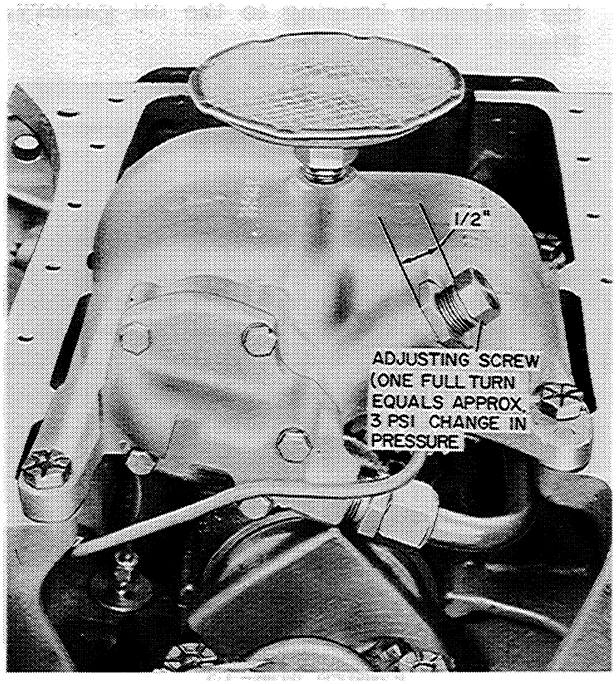

Figure MM-12. Preliminary Adjustment on Relief Valve

IMPORTANT

IF THE OIL PRESSURE DOES NOT INCREASE WHEN THE RELIEF VALVE OPENING PRESSURE IS INCREASED, CHECK THE ENGINE CAREFULLY FOR THE CAUSE OF THE PRESSURE LOSS.

Balancer Removal and Disassembly

1. Drain the crankcase and remove the oil pan.

2. Remove the small oil pressure line from the balancer housing to the oil gallery, Figure MM-13.

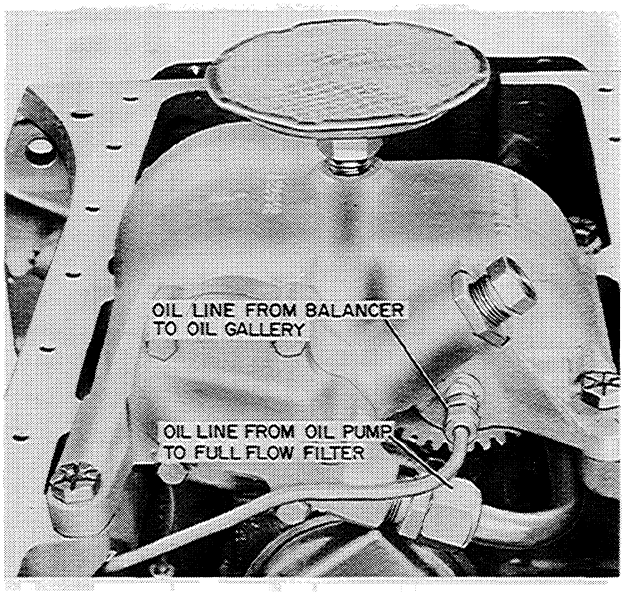

Figure MM-13

3. Remove the large oil line from the oil pump to the full flow filter, Figure MM-13.

4. Remove the four balancer mounting cap-screws, Figure MM-14.

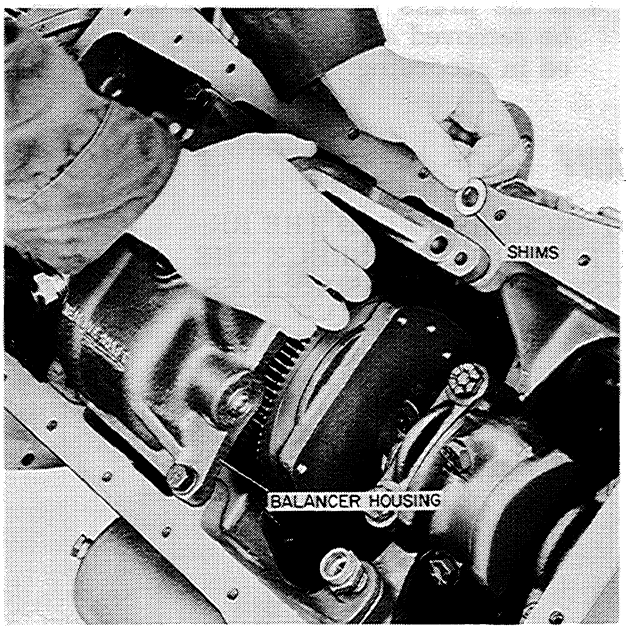

Figure MM-14

CAUTION

MAKE NOTE OF THE SHIMS INSTALLED BETWEEN THE BALANCER MOUNTING POINTS AND THE CYLINDER BLOCK MOUNTING PADS, FIGURE MM-14. THESE ARE INSTALLED TO MAINTAIN THE PROPER BACKLASH BETWEEN THE DRIVE GEAR ON THE CRANKSHAFT AND THE DRIVEN GEAR IN THE BALANCER.

The balancer can now be removed from the cylinder block.

5. The balancer assembly is usually removed because:

   a. Balancer drive gear on crankshaft must be replaced. In this instance the crankshaft must be removed from the cylinder block, Refer to Page M-61.

   b. Bushings seized in the balancer. Refer to Page M-118.

6. Before pressing out the splined shaft make certain that the Allen Head set screw has been removed, Figure MM-15.

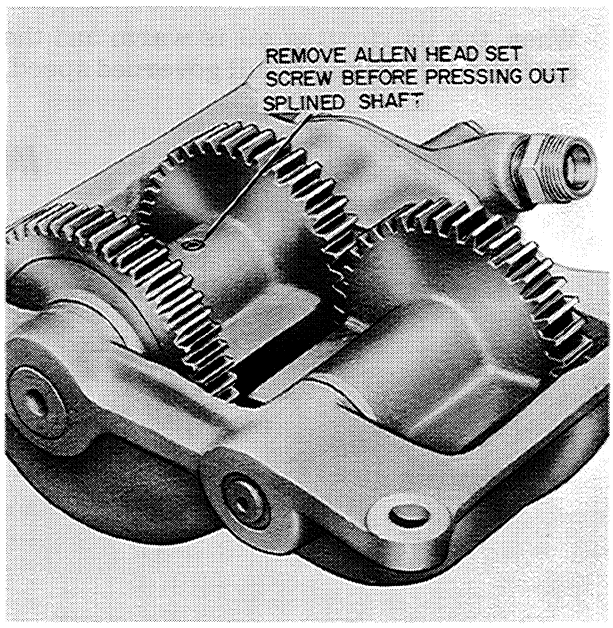

Figure MM-15

7. Press the splined shaft out of the housing from the oil pump side as indicated on the balancer housing, Figure MM-16.

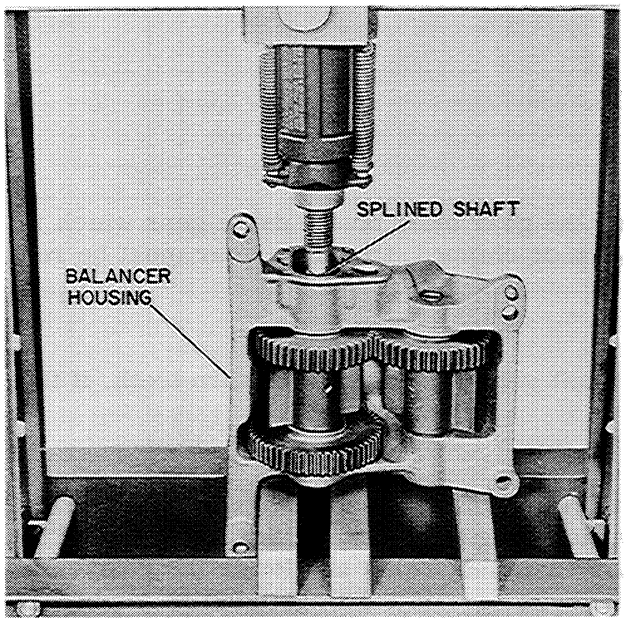

Figure MM-16

8. Before pressing out the ilder shaft on which the driven counterweight rotates, make certain that the Allen Head Set

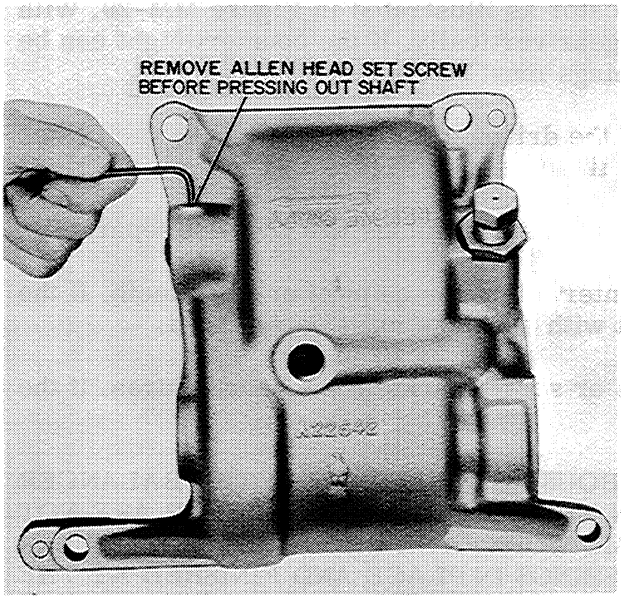

Figure MM-17

screw which stakes the shaft to the balancer housing is removed, Figure MM-17.

9. Press the idler shaft out of the housing from the oil pump side as indicated on the balancer housing, Figure MM-18.

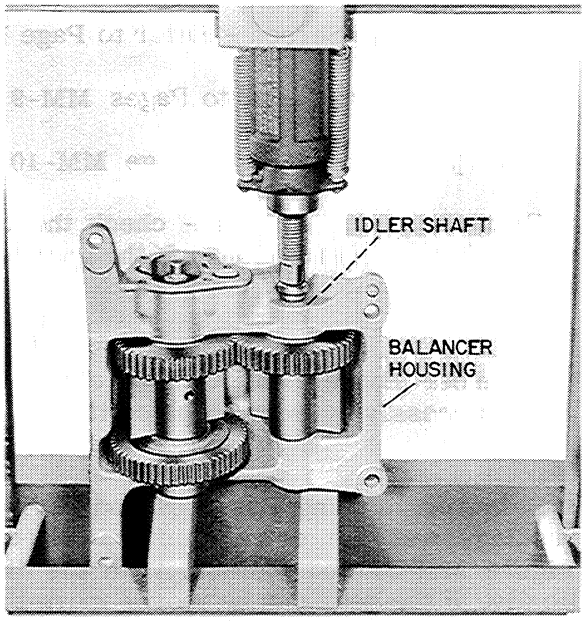

Figure MM-18

IMPORTANT CAUTION

DO NOT ATTEMPT TO PRESS THE SHAFTS OUT FROM THE END OPPOSITE THE OIL PUMP AS SERIOUS DAMAGE TO THE BALANCER HOUSING WILL RESULT.

Inspection of Oil Pump and Balancer Parts

Oil Pump - Refer to Page MM-10.

Oil Pump Intake Screen - Refer to Page MM-9.

Oil Pump Cover - Refer to Pages MM-9 and MM-18.

Oil Pump Gears - Refer to Page MM-10.

Crankshaft Drive Gear - check the condition of the gear teeth on the drive gear which is mounted on the crankshaft. If the gear teeth are worn or chipped, the drive gear must be replaced.

Balancer Drive Shaft Gear - check the drive shaft gear for chipped or worn teeth. If the gear is ecessively worn, replace it.

Balancer Housing Bushings and Drive Shaft - the clearance between the balancer housing bushings and the drive shaft can be checked by installing a dial indicator as illustrated in Figure MM-21 and MM-22. With the dial indicator installed, raise and lower the gear vertically. If the gear can be moved more than .007, the housing with bushings must be replaced.

NOTE Make sure both right hand and left hand bshings are checked separately.

Driven Counterweight Bushings and Shaft - the clearance between the counterweight bushings and shaft can be checked by installing a dial indicator as illustrated in Figure MM-20. With the dial indicator installed, raise and lower the gear vertically. If the counterweight can be moved more than .007, the counterweight with bushings must be replaced.

NOTE Checking clearance on the left hand side of the driven counterweight can be facilitated by using electrician or friction tape as a handle as illustrated in Figure MM-20.

IMPORTANT Make sure both the right hand and left hand bushings are checked separately.

Driven Counterweight - inspect the driven counterweight for chipped or worn teeth. If the gear teeth are worn excessively, the counterweight with bushings must be replaced.

Driven Shaft - inspect the driven shaft for burrs or score marks in the bearing area. If the driven shaft is excessively worn, replace it.

NOTE THE BUSHINGS IN THE BALANCER HOUSING, BUSHINGS IN THE BALANCER DRIVEN COUNTERWEIGHT AND THE BUSHING IN THE OIL PUMP DRIVEN GEAR ARE NOT REPLACEABLE. WHEN THESE BUSHINGS BECOME WORN, A NEW HOUSING, NEW COUNTERWEIGHT OR NEW GEAR COMPLETE WITH BUSHINGS IN PLACE AND FINISHED AT THE FACTORY MUST BE INSTALLED.

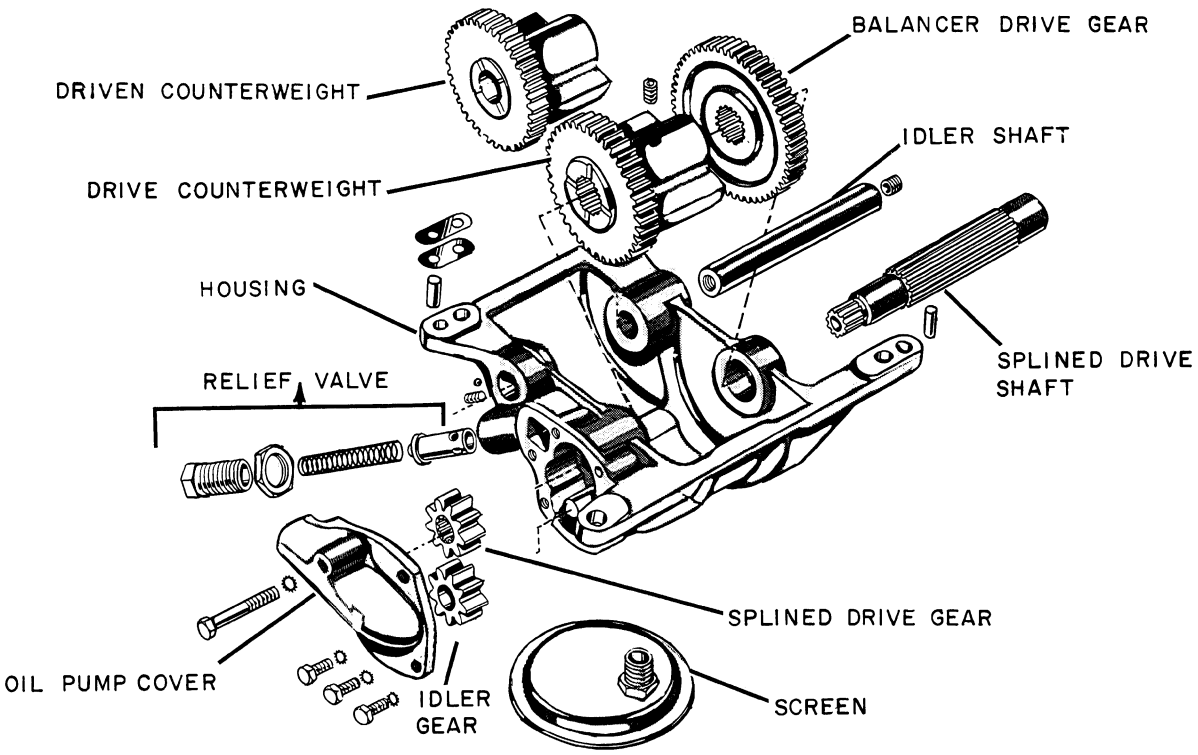

Figure MM-19

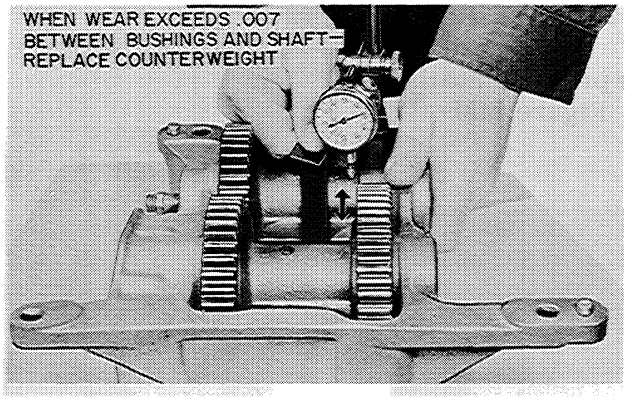

Figure MM-20. Checking Clearance Between Counterweight Bushing and Drive Shaft - Left Hand Side



Figure MM-21. Checking Clearance Between Drive Shaft and Bushing - Left Hand Side.

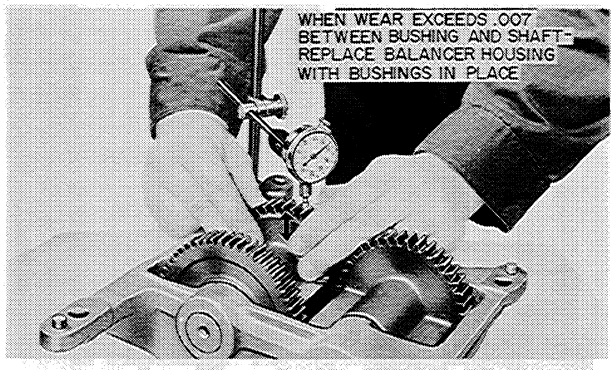

Figure MM-22. Checking Clearance Between Drive Shaft and Bushing-Right Hand Side.

Assembly of the Balancer

1. The splined shaft has a flat spline and must be aligned with the proper mating splinge in the drive gear and the driving counterweight, Figure MM-23. The splined shaft must be installed from the end opposite the oil pump.

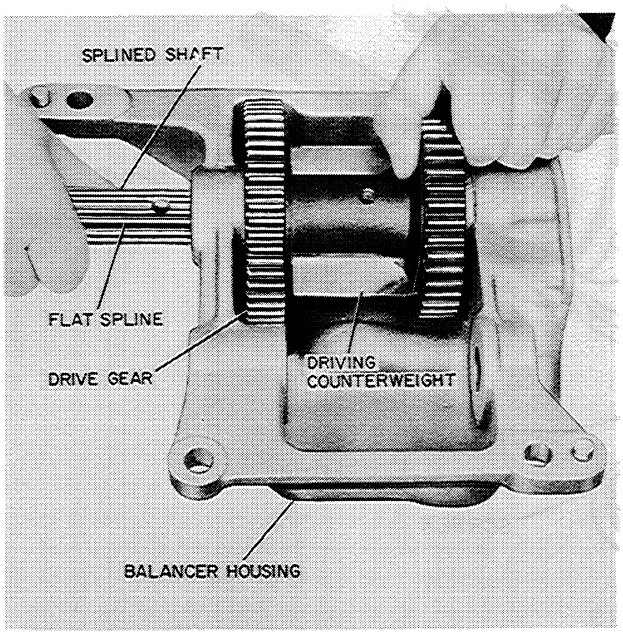

Figure MM-23

2. The splined shaft must be pressed into the gear and counterweight, Figure MM-24.

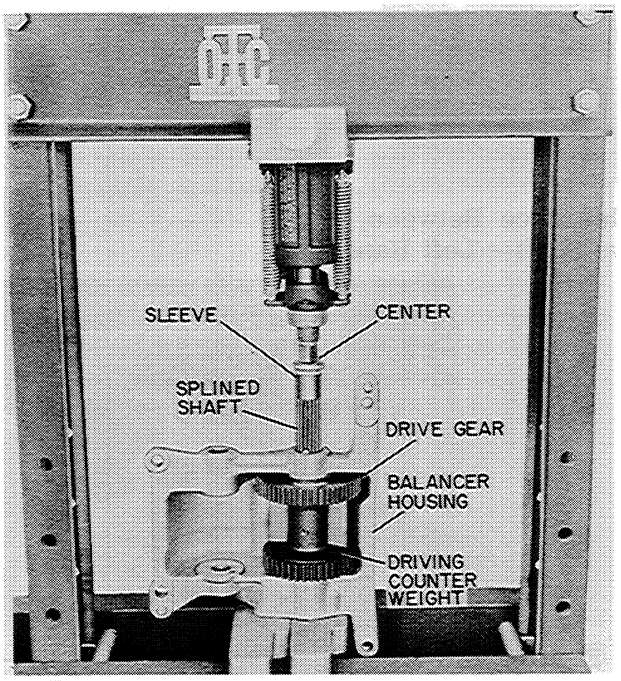

Figure MM-24

Lubricate the shaft and bushings with "Lubriplate" before pressing it into the drive gear and driving counterweight.

IMPORTANT CAUTION

PRESS THE SHAFT INTO THE GEAR AND COUNTERWEIGHT UNTIL THE SLEEVE ON THE END OF THE SHAFT BUTTS AGAINST THE INTERNAL SPLINES OF THE GEAR. THERE MUST BE A MINIMUM OF .010 INCH SIDE CLEARANCE BETWEEN THE COUNTERWEIGHT AND BALANCER HOUSING.MAKE SURE WHEN PRESSING THE SHAFT INTO THE GEAR AND COUNTERWEIGHT THAT THE CENTER USED COVERS THE SLEEVE ON THE SHAFT AS WELL AS THE SHAFT ITSELF.

3. After checking the side clearance, the recess in the shaft must line up with the hole in the counterweight. Install the Allen Head set screw, Figure MM-25, tighten securely and stake (centerpunch) the counterweight around the set screw.

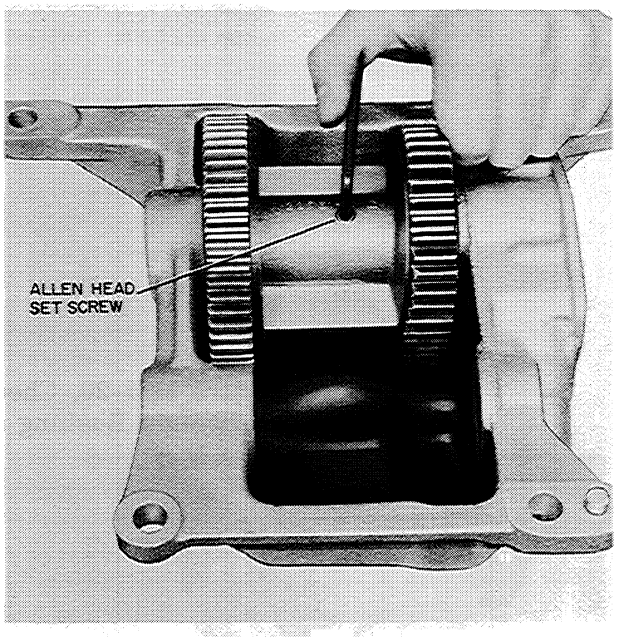

Figure MM-25

Make sure that the set screw is tight and staked, (centerpunch) otherwise the shaft could shift out of position.

4. Before installing the idler shaft into the balancer housing and driven counterweight, it will be necessary to properly time the one counterweight to the other, Figure MM-26. The two counterweights have timing marks on the inside of the

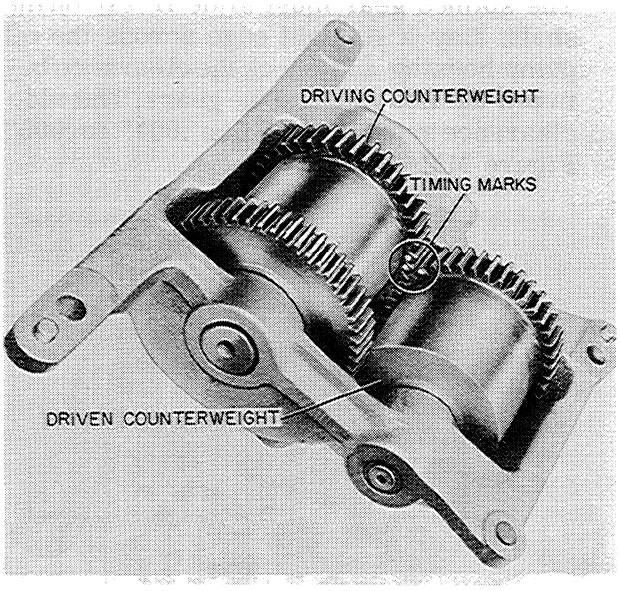

Figure MM-26

gear teeth, Figure MM-26. By installing the proper punch marked teeth in mesh as illustrated in Figure MM-26, the weights will be properly timed.

5. After the counterweights have been properly timed, the idler shaft can be pressed into the housing, Figure MM-27. Lubricate the shaft and bushings in the counterweight with "Lubriplate" before pressing the shaft into the housing.

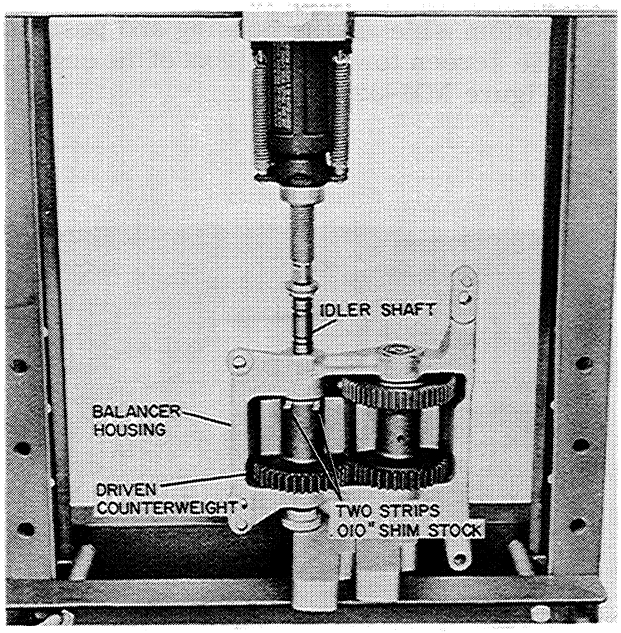

Figure MM-27

IMPORTANT CAUTION

PRESS THE SHAFT INTO THE HOUSING AND COUNTERWEIGHT. PLACE A .010" PIECE OF SHIM STOCK BETWEEN THE COUNTERWEIGHT AND THE HOUSING, FIGURE MM-27. WHEN THE SHAFT IS FULLY PRESSED IN, PULL THE SHIM STOCK OUT. IN THIS WAY, THE .010" SIDE CLEARANCE WILL BE OBTAINED BETWEEN THE DRIVEN COUNTER-. WEIGHT AND THE BALANCER HOUSING.

6. After the idler shaft is pressed in and the side clearance is obtained, the backlash will have to be checked between the two counterweights, Figure MM-28. The pro-

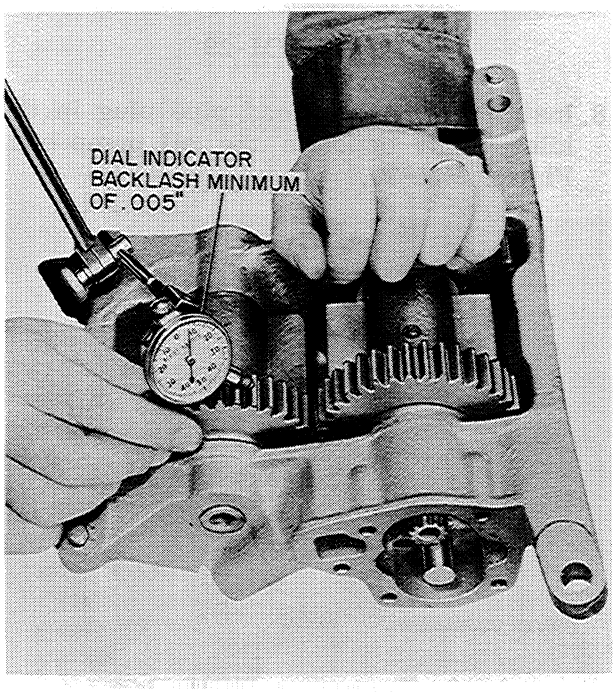

Figure MM-28

per backlash between the two counterweights is a minimum of .005". Rotate counterweights 90° and recheck backlash Check backlash every 90° for one revolution.

7. The idler shaft must be tightened securely to the balancer housing with the Allen Head set screw to prevent the shaft from shifting inside the housing, Figure MM-29.

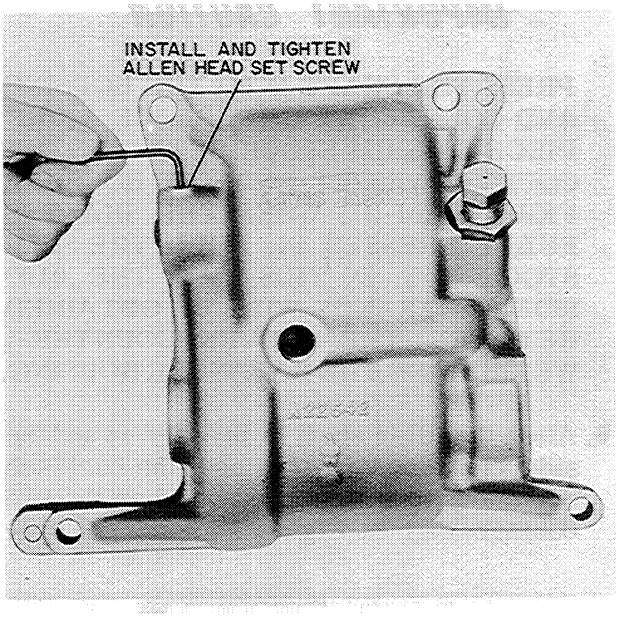

Figure MM-29

8. Install the Allen Head pipe plug in the idler shaft opposite the oil pump end, Figure MM-30.

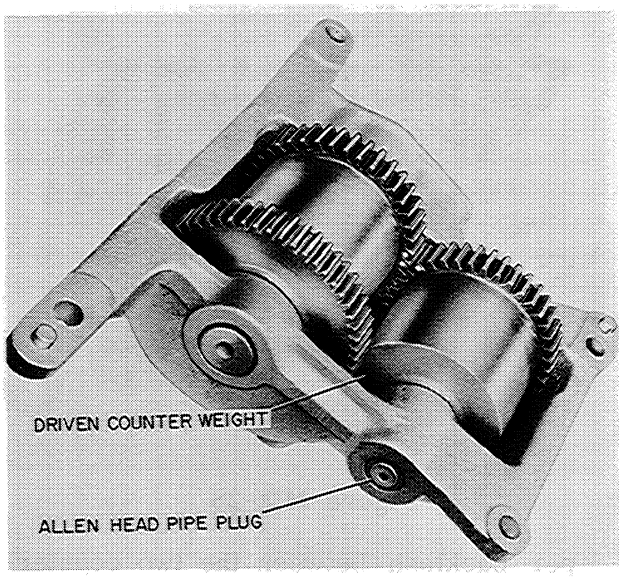

Figure MM-30

IMPORTANT

MAKE SURE THE ALLEN HEAD PIPE PLUG IS INSTALLED IN THE END OF THE IDLER SHAFT. THE SHAFT IS HOLLOW AND IF THE PLUG IS NOT INSTALLED, THE BUSHINGS IN THE HOUSING AND DRIVEN COUNTER WEIGHT WOULD NOT RECEIVE OIL LUBRICATION. THIS WOULD CAUSE THE BUSHINGS TO SEIZE AND RESULT IN FAILURE OF THE BALANCER.

9. Lubricate the oil pump gears and shafts and install the gears in the pump housing. The splined gear must slide freely on the shaft. Lay a straight edge across the oil pump housing and check the clearance between the housing and the gears. The side clearance must be between .001" to .005" Figure MM-31.

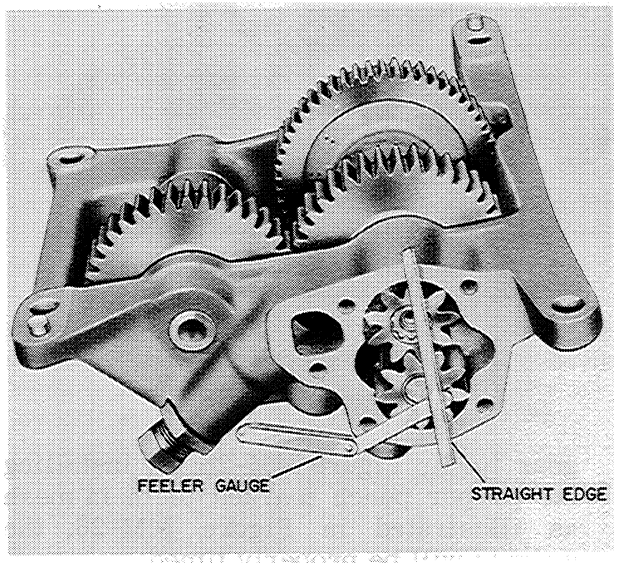

Figure MM-31

Install the pump cover plate and torque the five capscrews to 15 foot pounds.

10. Install the oil pump intake screen on the bottom side of the housing and position the screen toward the front of the engine, Figure MM-32.

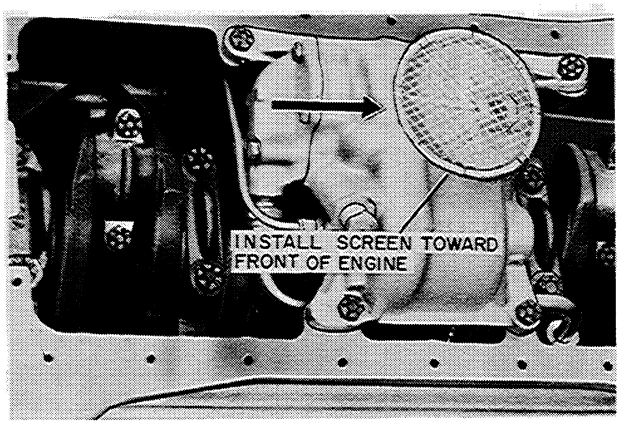

Figure MM-32

Installing the Balancer in the Engine

NOTE

BEFORE INSTALLING THE BALANCER IN THE ENGINE - MAKE CERTAIN THAT THE COUNTERWEIGHTS CAN BE ROTATED FREELY.

To install the balancer, proceed as follows:

1. The balancer rotates at twice the speed of the crankshaft. There are two positions on the crankshaft drive gear that can be properly timed to the driven gear in the balancer. These two positions will be 180° apart on the crankshaft drive gear. Install the balancer on the mounting pads of the cylinder block with the proper timing marks meshed, Figure MM-33.

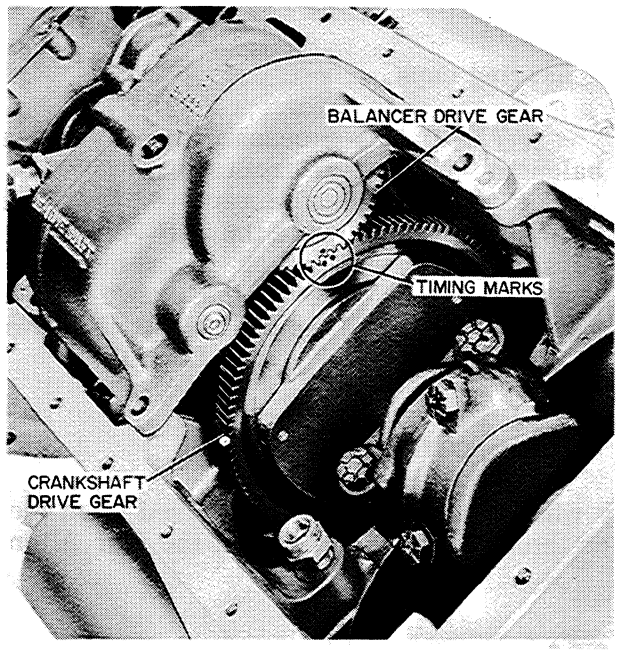

Figure MM-33

2. Shim all four mounting pads for proper backlash between the crankshaft drive gear and balancer gear. The proper backlash is from .008 inch to .013 inch and it should be checked with a dial indicator at three positions 120° apart on the crankshaft drive, Figure MM-34.

IMPORTANT CAUTION

VARIATION IN SHIM THICKNESS ON THE RIGHT HAND SIDE COMPARED TO THE LEFT HAND SIDE MUST NOT EXCEED .005 INCH. SHIM THICKNESS AT THE FRONT AND REAR BOLTS ON ONE SIDE OF THE BALANCER MUST BE EQUAL. SHIMS ARE AVAILABLE IN .005 AND .010 INCH THICKNESS.

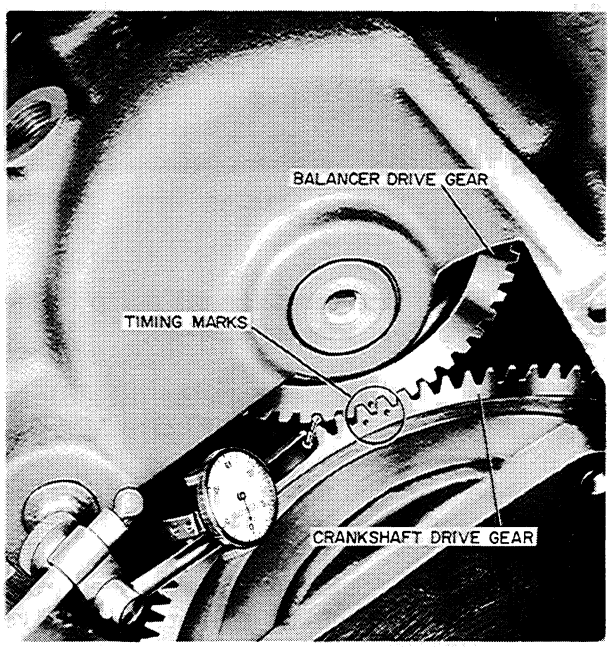

Figure MM-34

The contact point of the crankshaft gear and balancer gear is located approximately 2/3 of the distance from the mounting points on the right hand side and 1/3 the distance from the left side - therefore approximately a 2 to 1 variation in backlash can be obtained by installing a shim on one side instead of the other.

3. Install the oil line from the full flow filter and the oil line from the oil gallery.

Crankshaft Balancer Drive Gear Removal

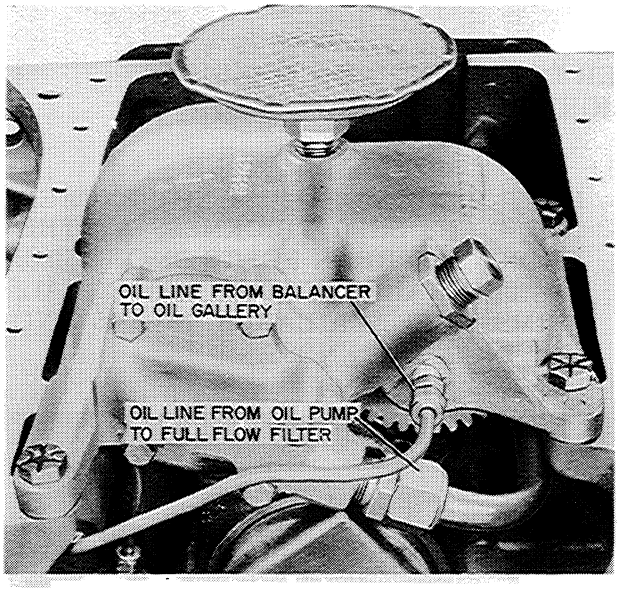

Figure MM-35

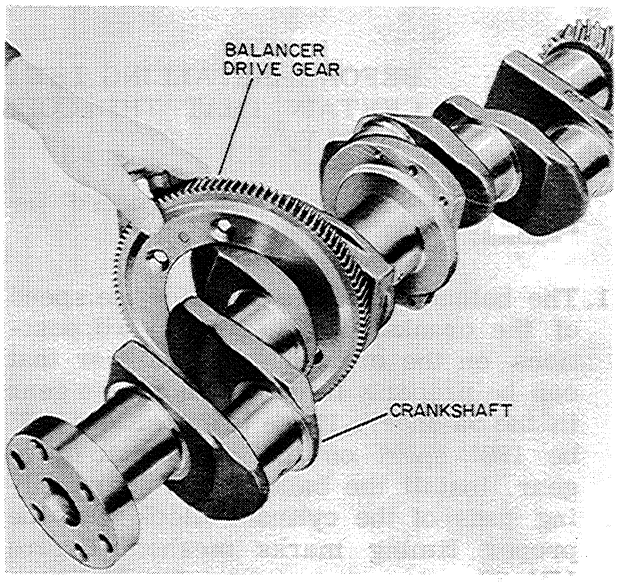

Figure MM-36

1. Remove the line from the oil pump to the full flow filter, Figure MM-35.

2. Remove the oil line from the oil gallery to the balancer housing, Figure MM-35.

3. Remove the balancer assembly by removing the four capscrews.

4. The crankshaft can now be removed from the cylinder block by removing the five bearing caps.

NOTE If it is necessary to remove the balancer drive gear from the crankshaft, the crankshaft must be removed from the cylinder block. Remove the four Allen Head capscrews from the gear and remove the gear by moving it over the crank throws toward the rear of the crankshaft as shown in Figure MM-36.

Installing Balancer Drive Gear on Crankshaft

The balancer drive gear can be installed only when the crankshaft is removed from the cylinder block. Position the drive gear on the flange on the crankshaft and install the four Allen Head Capscrews.

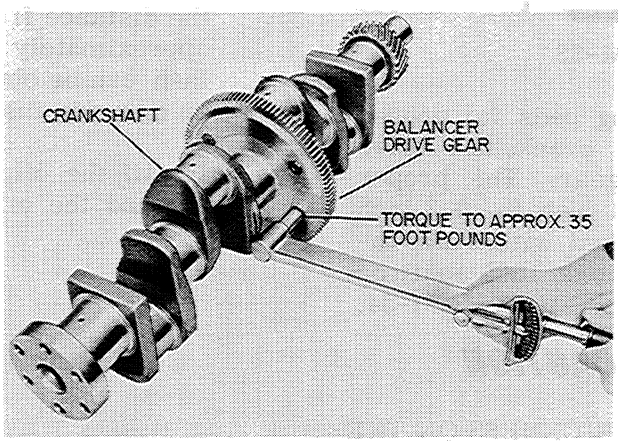

Figure MM-37

The Allen Head Capscrews must be torqued to approximately 35 foot pounds, Figure MM-38.

NOTE: The CASE CORPORATION reserves the right to make improvements in design or changes in specifications at any time without incurring any obligation to install them on units previously sold.

SECTION

3M

SERVICING THE WATER PUMP

PRINTED IN U.S.A.

WATER PUMP
(Refer to Figure 3M-1)

Removal

1. Drain the radiator and engine block.
2. Remove radiator and water by-pass hoses.
3. Remove the fan capscrews and fan.
4. Remove pump mounting capscrews and pump.

Disassembly

1. Remove the pulley retainer nut (10) from the shaft (5).
2. Using a suitable puller remove the impeller (2) pulley (9) and key (8).
3. Remove the shaft bearing retainer snap ring (7).
4. Press on the inner end of the shaft and remove the shaft (5) and bearings (6) out the pulley end of the housing (4).
5. Press out the pump seal (3).
6. On pumps that use the bushing (12), use a C-653 sizing Arbor to remove the bushing. ***NOTE*** The C-653 sizing Arbor is available from Owatonna Tool Company.

Inspection

With the water pump completely disassembled, the component parts can easily be cleaned and inspected for wear, cracks and burrs. All parts that are worn or damaged must be replaced.

Ball Bearings - Inspect for nicks, burrs, and grooves that may cause binding of the balls or wear on the races. Replace if damaged.

Pump Seal - Replace anytime the water pump is disassembled.

Bushing (If So Equipped) - Inspect for nicks, grooves, burrs and wear. Bushing inside diameter when installed - .874" to .875". Clearance between bushing and shaft .0015" to .004".

Pump Shaft - Inspect for nicks, grooves and burrs. Shaft diameter at bushing contact point - .8710" to .8725". Replace if worn or damaged.

Impeller - Inspect for cracks, damaged vanes and smoothness at seal contact area. Replace if necessary. ***NOTE*** Pumps having two bearings have a seat (13) in the impeller which the shaft seal rides against and is replaceable. Press seat (13) in until it bottoms.

Assembly

1. If so equipped and needs replacing install a new bushing (12) using a C-653 sizing Arbor available from Owatonna Tool Company.
2. Press in a new seal (3) from the impeller end until the lip of the seal is seated against the housing.
3. If the bearings (6) were removed press the bearing on the shaft until seated. When two bearings (6) are used press the first bearing on then install the spacer (11) and outer bearing (6). ***NOTE*** Sealed side of bearings must face pulley end of shaft.

IMPORTANT- Thoroughly pack the bearings and pump cavity with a good grade Number 2 gun grease. DO NOT USE WATER PUMP GREASE.

4. Press in the shaft and bearing assembly and install snap ring(7).
5. Install the pulley key (8) and press the pulley on the shaft until seated against the bearing. Install nut (10) and torque to 60 foot pounds.
6. Press on the impeller (2) until the measurement shown in inset A or B is obtained for the proper engine.

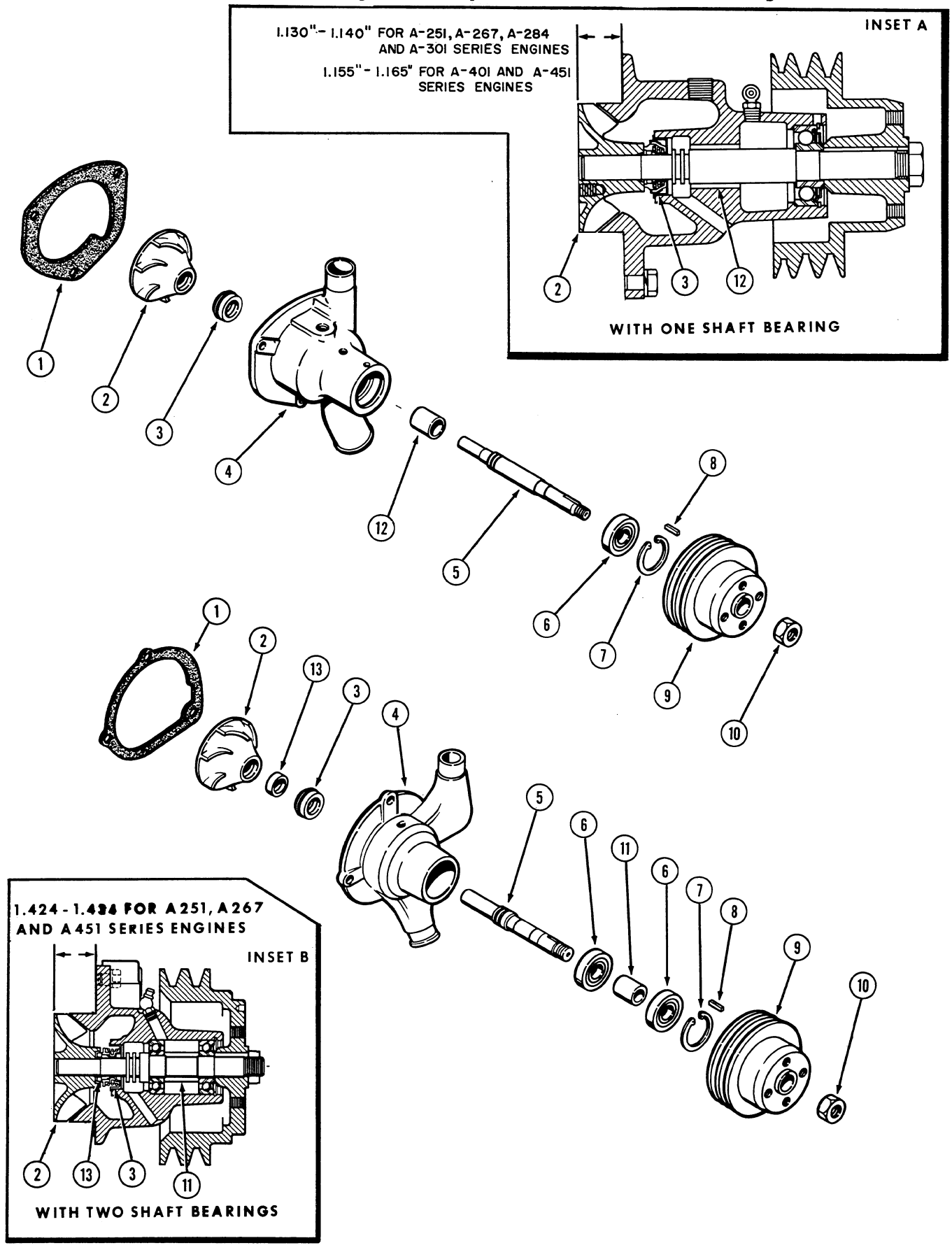
1.130"- 1.140" FOR A-251, A-267, A-284 AND A-301 SERIES ENGINES
1.155"- 1.165" FOR A-401 AND A-451 SERIES ENGINES
INSET A
WITH ONE SHAFT BEARING
1.424 - 1.434 FOR A251, A267 AND A451 SERIES ENGINES
INSET B
WITH TWO SHAFT BEARINGS

Figure 3M-1

WATER PUMP

Installation

1. Always install a new gasket. Make sure all the old gasket material is cleaned off. Use Permatex Number 3 or equivalent on the gasket.

2. Tighten the water pump mounting capscrews to 25 foot pounds.

3. Be sure to install the nut lock when installing the fan.

4. Adjust the fan belts to give a deflection of 1/2 of an inch (or 60 to 75 gauge reading) between the fan and alternator pulley. When the tension is too tight the water pump bearings and fan belt will wear excessively. When belt tension is too low, it will permit excessive belt wear and slippage. The most accurate method of checking belt tension is a Belt Tension Gauge, Figure 3M-2. Adjust the Belt Tension for the power steering drive belt to 75 gauge reading.

5. Check the water pump and hose lines for leakage after the engine is started.

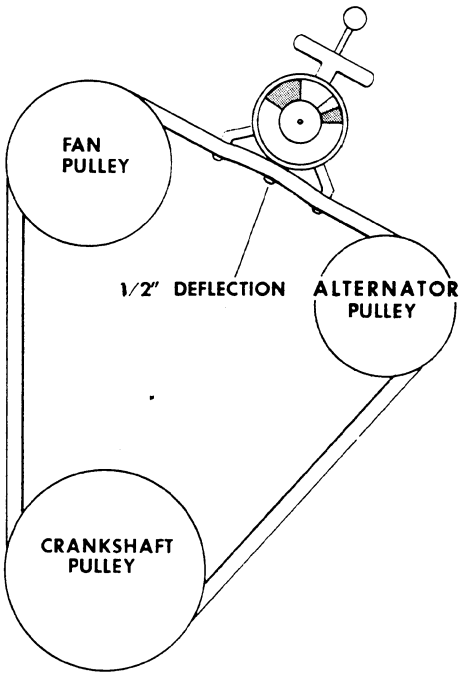

Figure 3M-2

NOTE: The CASE CORPORATION **reserves the right to make improvements in design or changes in specifications at any time without incurring any obligation to install them on units previously sold.**

SECTION

4M

SERVICING THE

SPARK IGNITION GOVERNOR

PRINTED IN U.S.A.

GOVERNOR AND THROTTLE LINKAGE

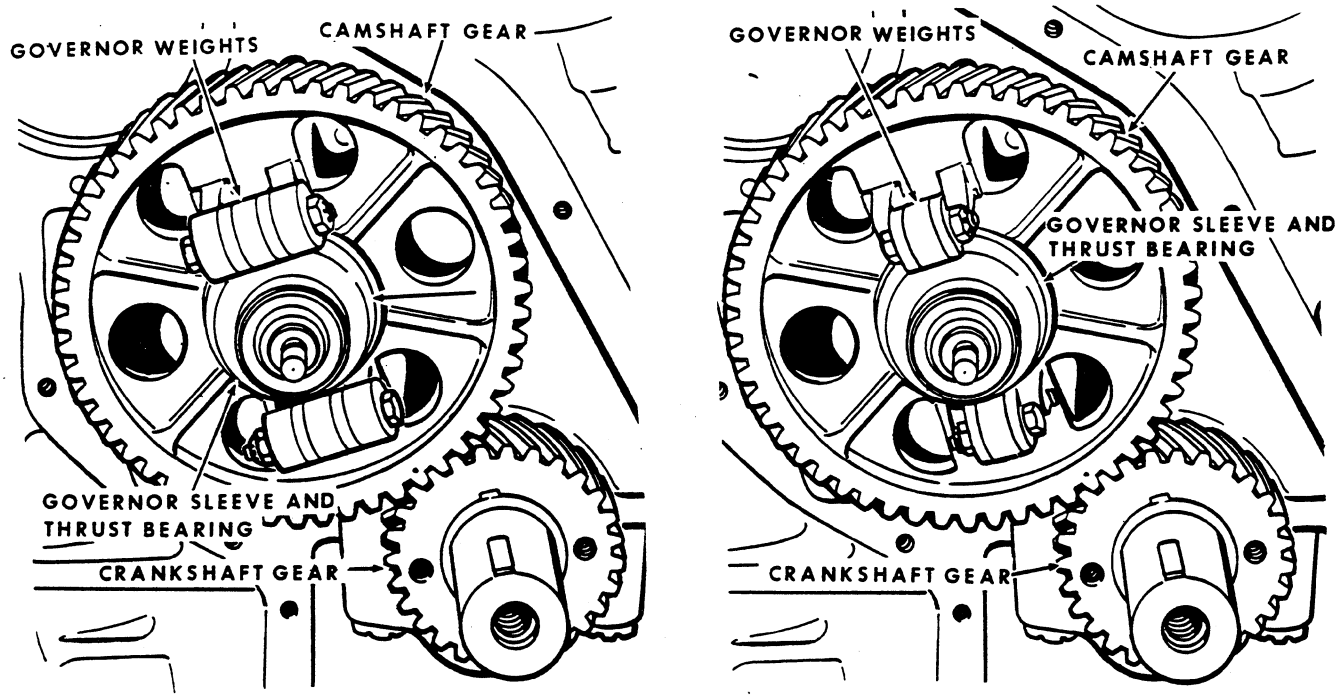

Figure 4M-1

General Description

The Spark Ignition Engine is equipped with a sensitive variable speed fly weight type governor. The weights are carried on the camshaft gear and the governor sleeve - thrust bearing assembly slides on the machined forward end of the camshaft, Figure 4M-1

Governor lubrication is accomplished by a drilled oil passage from the front camshaft bushing. A grease fitting is provided for lubricating the two governor lever shaft needle bearings carried in the timing gear cover cap, Figure 4M-2.

The action of the governor is simple and if its operation is understood, adjustment and servicing will present no problems.

It is the function of the governor to maintain a uniform engine speed when changes in load are encountered. The governor accomplishes this by maintaining a balance be tween the force of the governor weights and the opposing force of the governor spring tension.

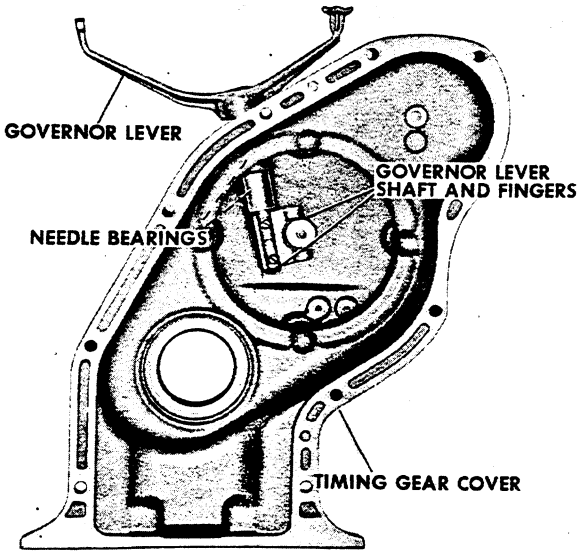

Figure 4M-2

Binding or wear in the governor linkage, weights, sleeve or thrust bearing upsets this balance and causes sluggish governor action.

Tools Required

General shop service tools, including an accuate tachometer and the A8349 Arbor for pressing in governor lever shaft needle bearings.

GOVERNED ENGINE SPEED

Listed below is the correct spring and weight combination to be used on the Case Spark Ignition Engines. It is very important this governor spring and weight be used to obtain the no load (high idle) engine speed and proper governor action.

Governor Weights

Springs	A20868 (Blue)	A20840 (Bronze)	A8894 (Yellow)
Used On	W-7, W-8B W-9B, W-10B	W-9A	W-9
Free Length	1-9/16"	1-5/8"	2-1/16"
Active Coils	10	8.5	16
Wire Diameter	.082"	.105	.072"

Governor Springs

Weights	A7277	
Used On	W-8B, W-9B, W-10B	W-7, W-9, W-9A
Number Used	2	6

Figure 4M-3

IMPORTANT

BE SURE TO USE THIS SPRING WITH THE CORRESPONDING WEIGHTS. FAILURE TO DO THIS WILL RESULT IN DIFFICULTY IN OBTAINING THE IDLE AND NO LOAD HIGH IDLE SPEEDS ON YOUR PARTICULAR ENGINE. REFER TO FIGURE 4M-3.

CASE spark ignition engines are carefully adjusted at the factory for full load engine speed for your particular engine. Refer to Operator's Manual.

DO NOT INCREASE THE GOVERNED ENGINE SPEED ABOVE THE FACTORY SETTING. UNAUTHORIZED CHANGES IN THE GOVERNED ENGINE SPEED OF AN ENGINE OR ENGINE UNIT WILL AUTOMATICALLY SERVE TO VOID AND WAIVE ANY WARRANTY WHATSOEVER BY THE J. I. CASE COMPANY.

ADJUSTING GOVERNED ENGINE SPEED

Instructions for adjusting the governed engine speed consist of the following:

1. Adjusting the No. Load (High) Idle Speed.

2. Adjusting The No. Load (Low) Idle Speed.

Adjusting The No Load (High) Idle Speed

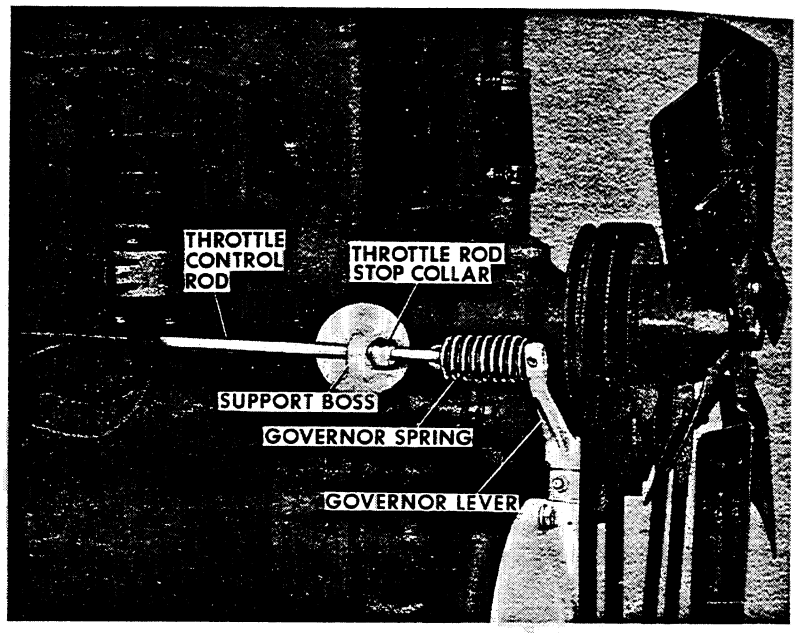

Figure 4M-4

1. Loosen the front throttle rod stop collar, Figure 4M-4, and move the throttle control rod forward or rearward until the No Load (High) Idle Speed is obtained on the tachometer for your particular engine.

2. Lock the set screw so the stop collar, is against the support boss on the engine, Figure 4M-4.

In some instances the governor does not allow the engine to reach the recommended No Load (High) Idle Speed. If this occurs, check the correct governor spring to be used. Refer to Page 4M-3.

CHECKING GOVERNOR ACTION

A governor in good condition will be very responsive to slight changes in load so that a uniform engine speed can be maintained.

Governor Surge (Under No Load)

An objectionable governor surge under no load will result from wear in the governor weight assembly. Check the entire governor assembly for wear or binding.

Check the carburetor adjustments also. Refer to Section N or NN on Carburetor Service Instructions.

Governor Surge (Under Load)

If the governor surges constantly with the engine under load, check the governor lever adjustment. Refer to Governor Linkage Page. Form 9-75711 in this manual.

Check the governor linkage for wear or binding. Refer to Governor Linkage Page, Form 9-75711 in this manual.

Check the governor weights, sleeves, fingers, etc., for wear as described on Page 4M-6. Replace all worn parts.

Check the carburetor adjustments. Refer to Sections N or NN on Carburetor Service Instructions.

Sluggish Governor Action

A sluggish governor is evidenced by the engine speed dropping noticeably before the governor responds to a change in load.

Check the entire linkage assembly for wear or binding. Refer to Governor Linkage Page, Form 9-75711 in this manual.

Check the governor lever setting. Refer to Governor Linkage Page, Form 9-75711 in this manual.

Inspect the governor weights, pins, fingers, sleeve etc., for wear or binding, Page 4M-6. Replace all worn parts.

Inspect the carburetor throttle shaft bushings. Refer to Sections N or NN on Carburetor Service Instructions.

Governor Does Not Allow Engine to Reach High Idle

Wrong governor weight and spring combination being used. Refer to Page 4M-3.

SERVICING GOVERNOR

The governor weight and sliding sleeve assembly can be checked and serviced by removing just the timing gear cover. The illustrations in the following instructions show the timing gear cover removed for illustrative purposes only.

Checking Governor Sleeve

1. Pull the governor sleeve off the end of the camshaft, Figure 4M-5.

2. Check the hardened machined surface of the sleeve that contacts the governor weight fingers. If wear is apparent, replace the sleeve.

3. The thrust bearing carried on the sleeve must turn freely. Replace it if any drag is apparent.

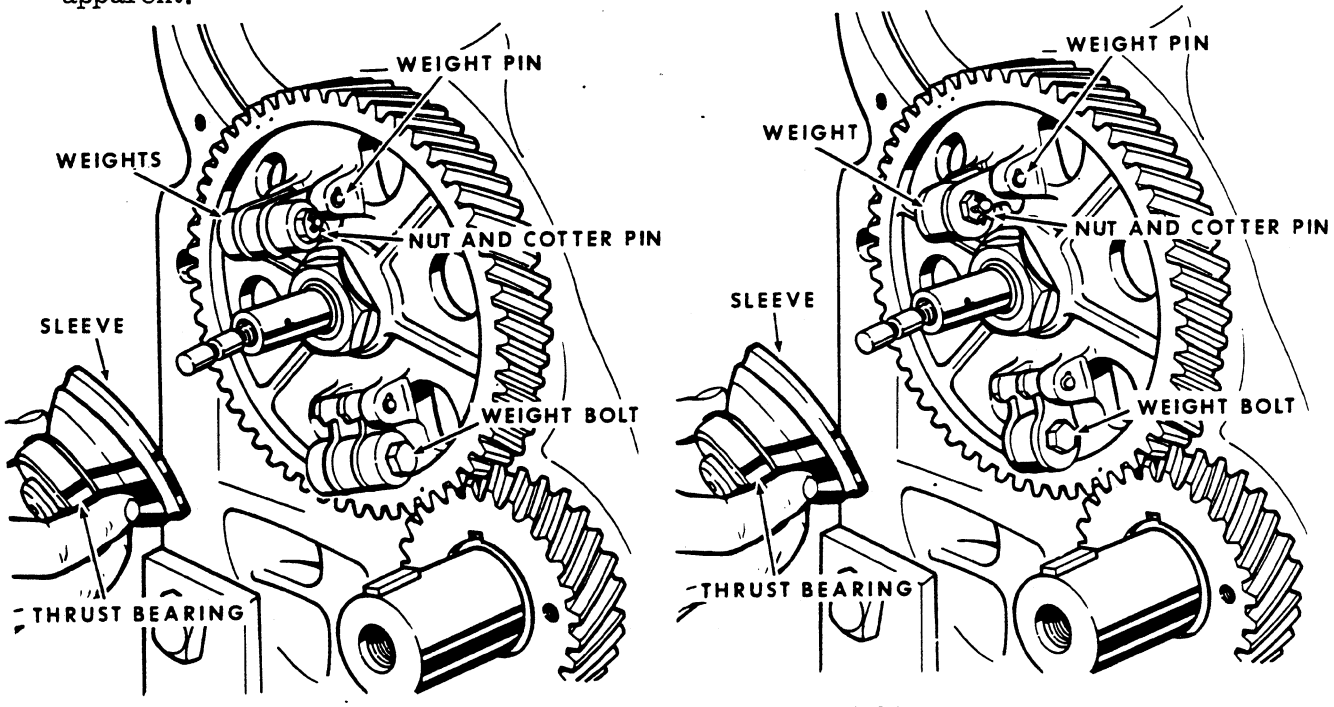

Figure 4M-5. A7277 Governor Weights

Removing and Checking Governor Weights

1. Remove the snap ring from one end of each weight pin and remove both weight assemblies from the camshaft gear.

2. Replace any pin that shows wear.

3. Check the weight pin holes in the camshaft gear. If wear is apparent, the gear must be replaced.

4. Disassemble the weight assemblies.

CAUTION Do mix weights, bolts and fingers. They must be reinstalled in their original position.

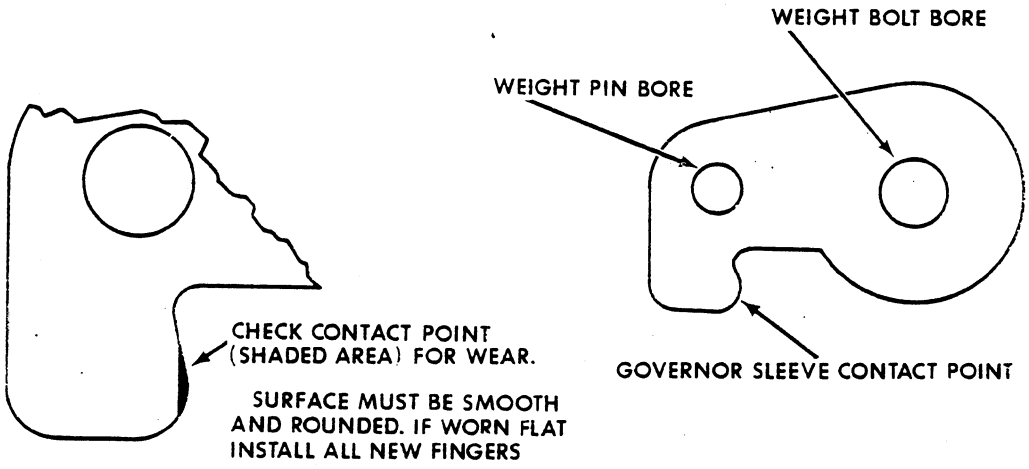

Figure 4M-6

5. Check each governor weight finger as indicated in Figure 4M-6.

   The finger must be perfectly flat and free of burrs.

   The small radius that contacts the sleeve must be smooth and rounded,

If any wear or "flattening" is apparent, ALL FOUR FINGERS MUST BE REPLACE, Figure 4M-5. Never replace just one set of fingers.

If either of the pin holes in the finger are worn out of round, REPLACE ALL FOUR FINGERS.

Governor weight fingers are sold only in sets of four for repairs.

6. Check the bore in each weight for out-of-round wear. Replace all worn weights. Check both weight bolts for indications of wear. Worn bolts must be replaced.

Installing Governor Weights

1. Assemble the governor weights and fingers on the weight bolts. Refer to Page 4M-3, for correct weight - spring combination

NOTE The weights and fingers must be installed on the bolts so the 5/16 inch castle nuts will be on opposite sides when installed on camshaft gear, Figure 4M-5.

2. Tighten the 5/16 inch castle nuts just enough so there is no apparent end play in the weights but the weights and bolts can be turned freely. Lock the nusts with new 1/16 x 1/2 inch cotter pins.

3. Mount the weight assemblies on the camshaft gear and install the snap rings. Replace any damaged snap rings.

4. Recheck the free turning of the weights and the free pivotal action of the weight assemblies on the camshaft gear.

Checking Governor Lever Assembly

NOTE The governor lever, governor lever shaft and finger are a balanced assembly and are provided only as such for repairs. If one unit of the assembly is worn or damaged, the entire assembly must be replaced.

1. Check that the governor shaft turns freely in its needle bearings. If the shaft or the bearings are damaged, they must be replaced. Make sure the finger on the governor shaft is tight. A loose or bent finger will make it impossible for the governor to hold engine speed within close limits.

2. To remove the governor arm shaft, remove the two screws holding the finger in the shaft. Remove the finger and pull the governor arm and shaft assembly out.

3. If required, install a complete new governor arm -- shaft and finger assembly.

4. If new needle bearings are required, use the A8349 Arbor for pressing the bearings into the retainer.

CAUTION Always press against the stamped end of the bearing. This is the end that carries the identification.

NEVER Tap or pound directly on the bearing shell.

5. ***IMPORTANT*** Always install a new rubber seal in the governor lever hub, Figure 4M-8.

This seal protects the needle bearings from abrasive dust and dirt.

You will note that the old seal has taken a cup shaped set. A new seal will be flat.

6. Be sure to reinstall the governor lever bearing washer, Figure 4M-8.

7. Install a new gasket on the timing gear cover cap.

8. Recheck the governor setting in relation to the machined forward face of the block. Refer to Governor Linkage Page, Form 9-75711 in this manual.

Adjust the rod connecting the lever and the carburetor. Refer to Governor Linkage Page, Form 9-75711 in this manual.

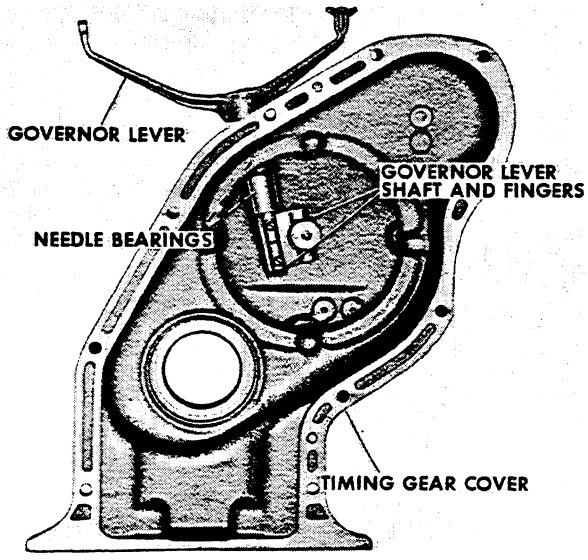

Figure 4M-7

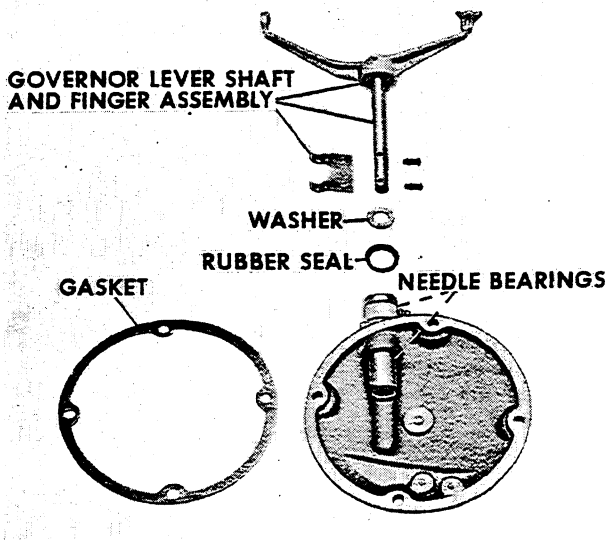

Figure 4M-8

NOTE; The CASE CORPORATION reserves the right to make improvements in design or changes in specifications at any time without incurring any obligation to install them on units previously sold.

GOVERNOR LINKAGE

Checking Governor Lever Setting

1. Disconnect the rod connecting the governor lever to the carburetor, Figure 1.

2. Disconnect the spring connecting the governor lever to the throttle control rod.

3. Pull and hold the governor lever away from the engine block as far as possible. (Carburetor side of engine).

   Measure the distance from the center of carburetor rod ball joint hole in the governor lever to the machined front face of the engine block. It must be 3-13/16 inches, Figure 1.

   If it measures more or less, the aluminum lever is bent. The lever can be straightened by careful bending.

   CAUTION Remove governor lever from gear cover cap before bending.

4. Place the foot throttle in the wide open position (full downward).

5. (a) Hold carburetor throttle valve lever so valve is in wide open position.

   (b) Adjust length of carburetor rod so governor lever will be approximately 3-3/4 inches from engine block machined face when rod is connected to carburetor lever. (measured from carburetor rod ball joint hole in lever), Figure 2.

6. Reconnect governor spring and check engine speed with tachometer.

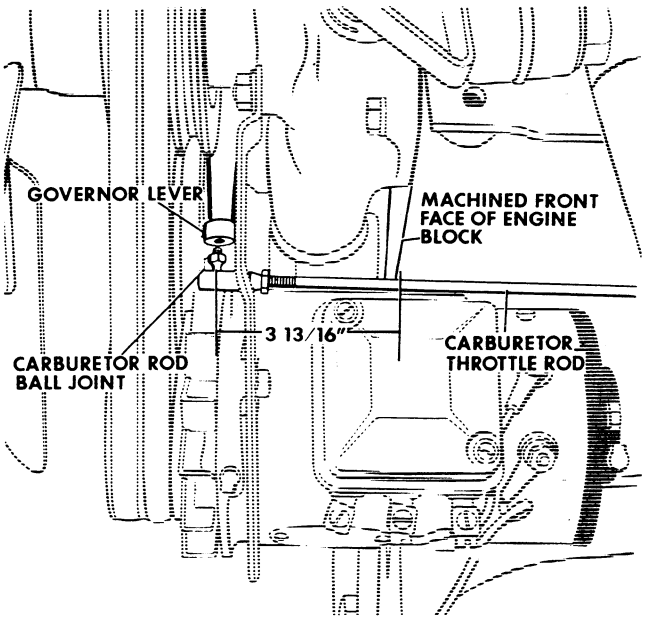

Figure 1

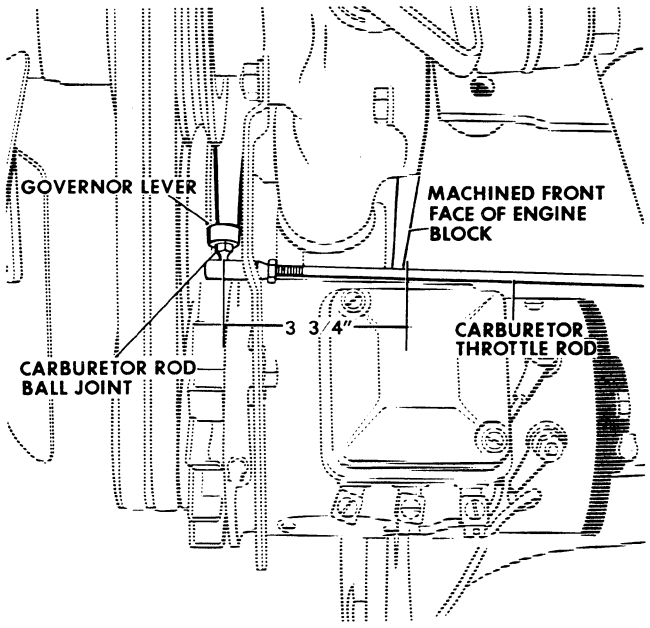

Figure 2

PRINTED IN U.S.A.

SECTION

I

SERVICING THE

FUEL INJECTORS

CASE POWRCEL

FUEL INJECTION PUMP

PRINTED IN U.S.A.

TABLE OF CONTENTS

FUEL INJECTORS . . . . . I-5 thru I-25

Description and Operating Principles . . . . . 1-5 and I-6

Diesel Tool Kits I-7

Checking Injector Operation on the Engine I-8

Removing and Installing Injector I-8

Nozzle (Injector) Test Stand I-10

Test Stand Installation I-11

Test Oil Recommendations I-12

Preparing Test Stand for Operation I-13

Testing Injector . . . . . I-13 thru I-16

Setting Injector Opening Pressure I-14

Disassembling, Cleaning, Checking and Reassembling Injector . . . I-17 thru I-25

CASE POWRCEL . . . . . I-26 thru I-32

General Description I-26

Servicing Powrcel . . . . . I-27 thru I-32

Removing and Installing Powrcel . . . . . I-28 thru I-29

Cleaning and Checking Powrcel . . . . . I-30 thru I-31

Installing Powrcel Body Locating Pin I-32

ROBERT BOSCH MODEL PES MULTIPLE PLUNGER(EXTERNAL DRIVE) FUEL INJECTION PUMP I-33

General Description I-33

Removing, Timing and Replacing Fuel Injection Pump . . . . . I-34 thru I-36

Adjusting the Governed Engine and Idle Speed . . . . . I-37 thru I-43

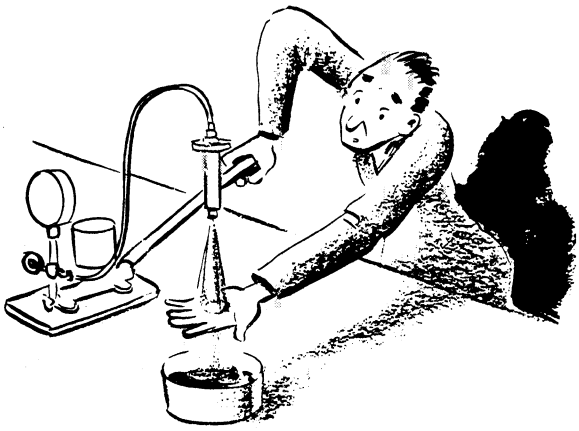

WARNING

When testing or adjusting fuel injectors, do not place your hands or arms in front of the injector nozzle.

The fuel spray from an injector has sufficient penetrating power to puncture the flesh and destroy tissue. Should the fuel enter the blood stream, it may cause blood poisoning.

In the event the skin is punctured from the discharge of an injector, apply the following first aid immediately, then have the injury examined by a physician as quickly as possible.

Wash the injured part with boric acid solution, support the injured finger or hand with a splint and sling so the injured part will remain absolutely at rest until a physician can examine it.

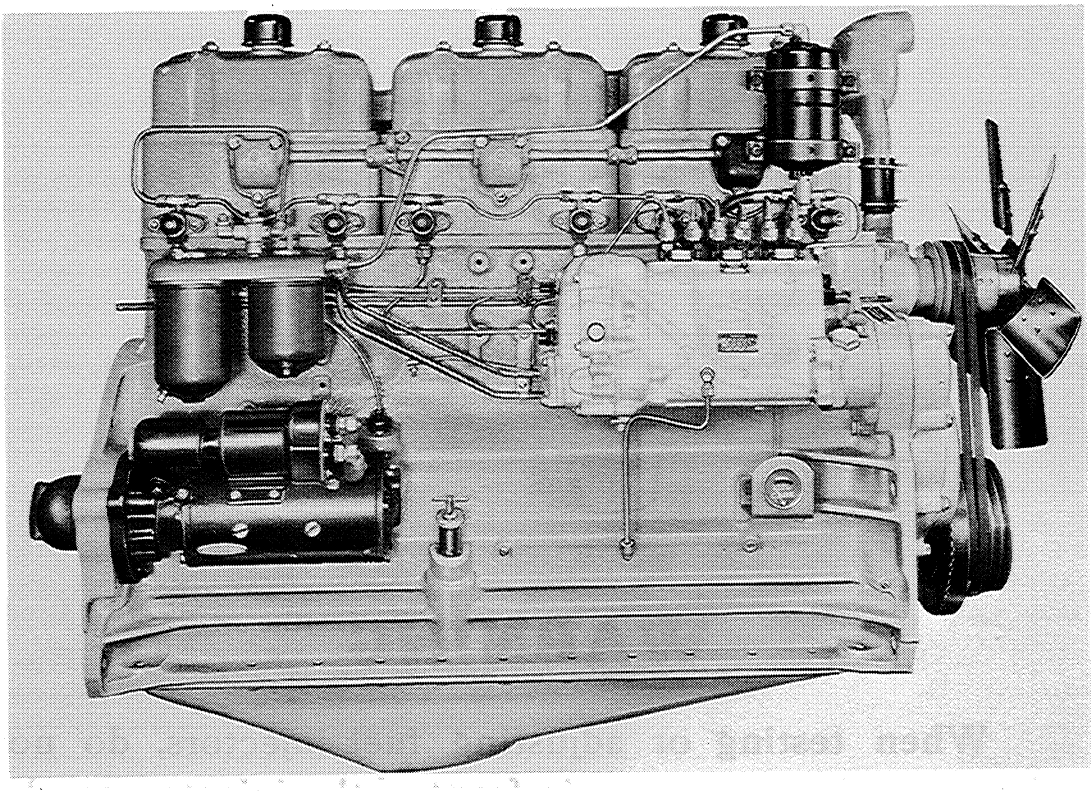

Figure I-1. Injection Pump Side of Case Six Cylinder Engine

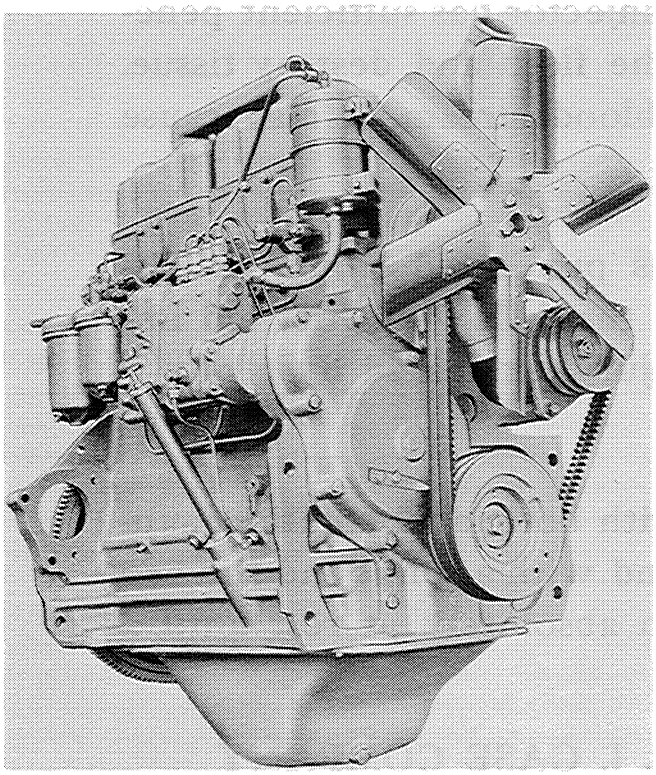

Figure I-2. Case Four Cylinder Engine

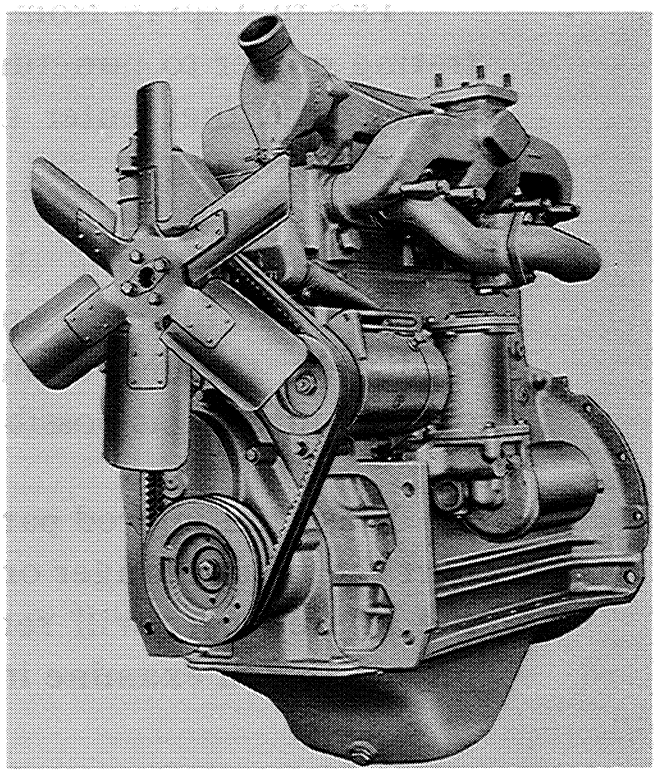

Figure I-3. Manifold Side of Case Four Cylinder Engine

FUEL INJECTORS

The following pages of this Section contain service information covering Case Diesel Engines.

The service information is the same for all Case Four and Six Cylinder engines unless otherwise indicated.

Description

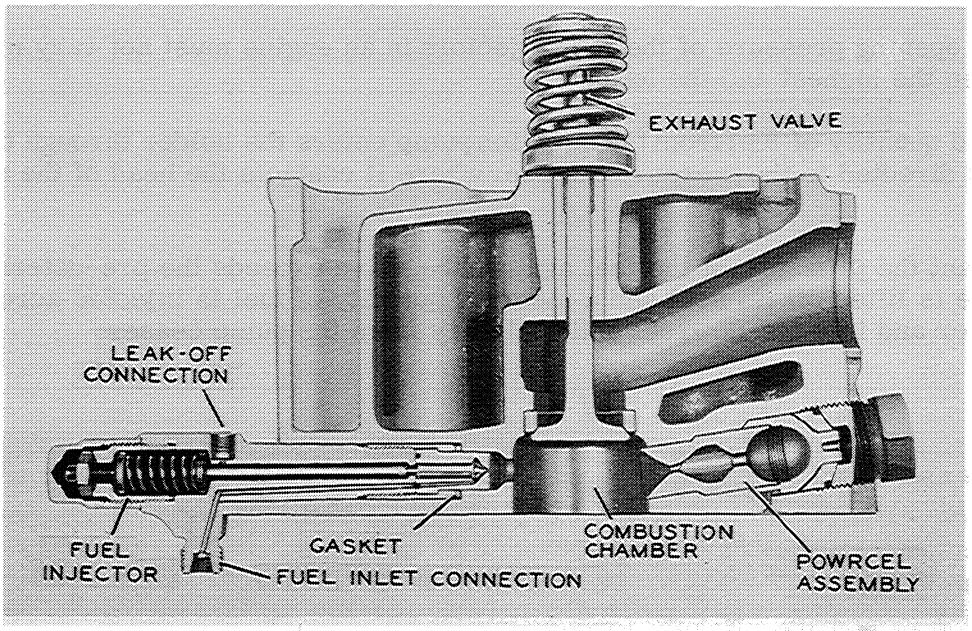

Figure I-4. Cutaway View of Injector and Cylinder Head Assembly

The fuel injectors are located in the right hand side of each cylinder head, one for each cylinder, Figure I-4. It is the function of the injectors to direct a metered quantity of fuel received from the injection pump across the cylinder combustion chamber into the Powrcel. This must be done with a very definite spray pattern and in such a manner as to produce the most efficient engine performance.

The 4 and 6 cylinder Diesel Engines use a Robert Bosch Pintle Type Injector. The injector is made up of two main parts -- the Nozzle and the Nozzle Holder, Figure I-5.

The Nozzle consists of two parts -- the Nozzle Body and the Nozzle Valve.

IMPORTANT The valve and body are lapped to form a mated assembly. The lapped fit is so close that measurement is impossible without special hydraulic and electronic instruments; the body and valve cannot be installed individually for repairs. If one or the other must be replaced, a complete new nozzle assembly must be installed.

The Nozzle Holder is used to hold the nozzle in its correct position in the cylinder head and to provide a means of directing fuel to the nozzle.

The holder also contains the necessary spring and means of pressure adjustment to control the pressure at which the nozzle valve is opened and fuel is injected.

The contacting surfaces of the nozzle body and the holder body are lapped to form a leakproof and pressure-tight seal. A complete new nozzle assembly may be installed on the holder.

OPERATING PRINCIPLES

The operation of the fuel injector is simple and positive.

The spring in the holder body maintains a preset pressure on the nozzle valve by means of the spindle, Figure I-5.

The spring pressure is set by means of the adjusting screw, Figure I-5. Refer to "Specification" Section for correct opening pressure.

NOTE The opening pressure of the four injectors in an engine must not vary more than 100 pounds between the highest and the lowest.

The metered quantity of fuel from the injection pump enters the holder through the inlet connection and is directed to the pressure chamber where it contacts the head of the nozzle valve, Figure I-5.

At the instant the pressure of the fuel against the valve exceeds the pre-determined spring load, the valve is lifted off its seat and a metered quantity of fuel is injected across the combustion chamber and into the Powrcel until delivery from the pump ceases.

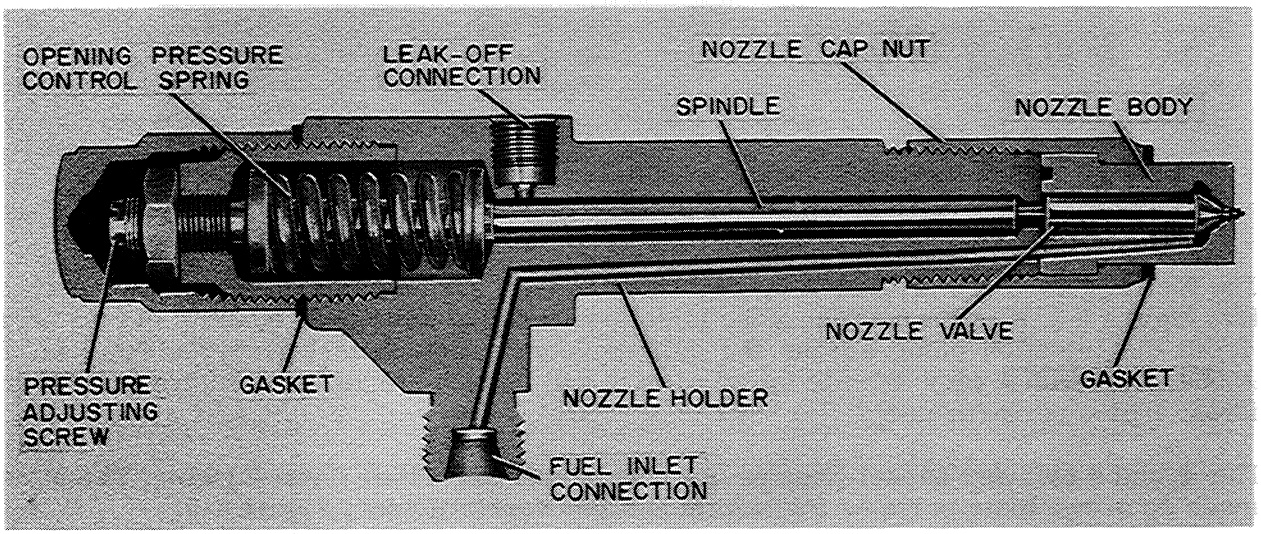

Figure I-5. Cutaway View of Injector

The instant fuel delivery ceases, a positive cut-off of fuel occurs as the nozzle valve is snapped to its seat by the spring force. This eliminates any possibility of dripping or dribbling after the metered amount of fuel has been delivered.

The projection of the nozzle valve through the opening in the end of the nozzle body produces a self cleaning effect when the valve opens or closes. This reduces the accumulation of carbon at this point and appreciably increases the service life of the injector.

A minute amount of fuel seepage occurs between the lapped surfaces of the nozzle valve and nozzle body. This is necessary for lubrication. This fuel accumulates around the spindle and drains through the leak-off connection into the return fuel line, Figure I-5.

DIESEL TOOL KITS

The Diesel Tool Kits illustrated below can be ordered through your Case Branch.

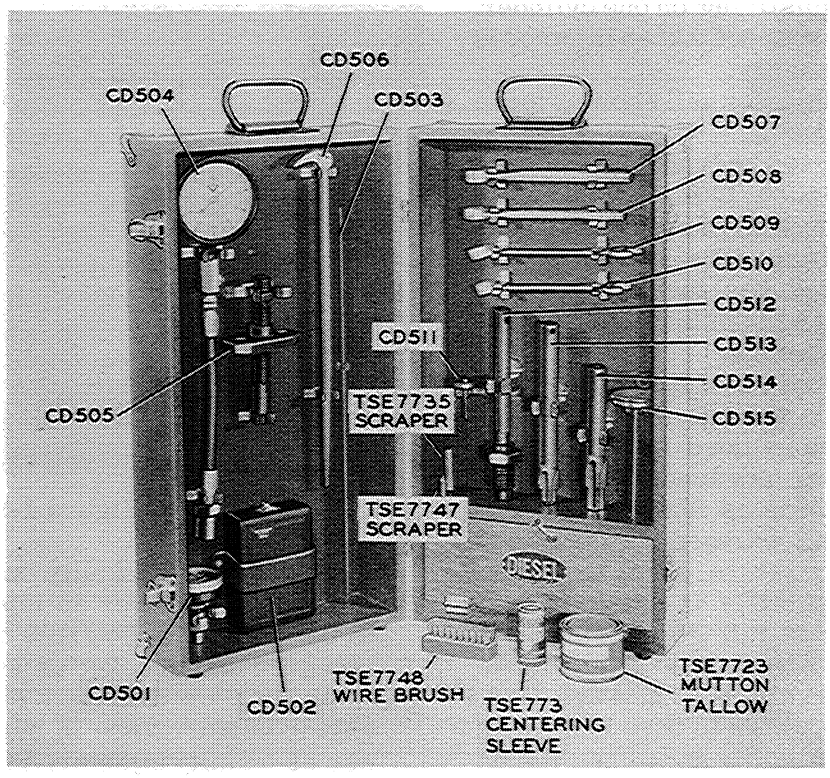

Figure I-6. CD 500 Tool Kit

Refer to Pages I-8, 9, 19, 20, 21 and 35 for illustrations of the use of the various tools shown on this page.

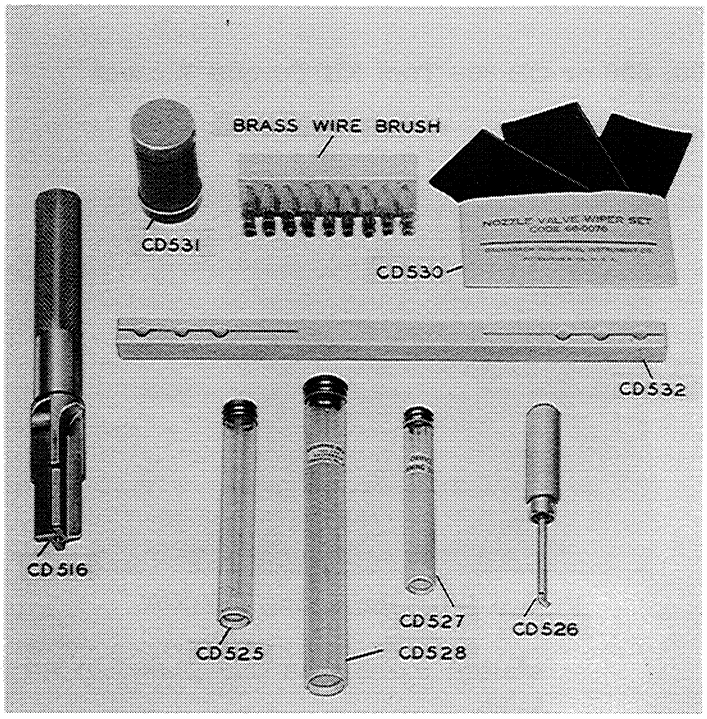

Figure I-7. CD 550 Tool Kit (Supplement to CD 500 Tool Kit)

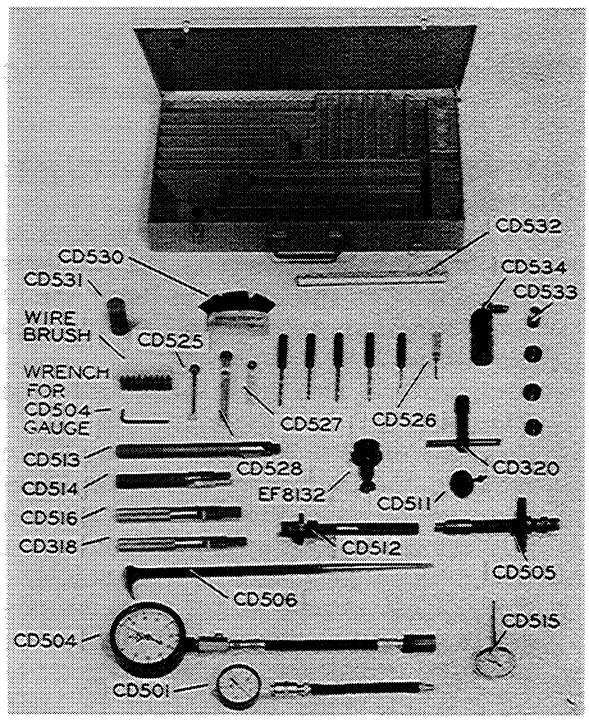

Figure I-8. CD 800 Tool Kit

CHECKING INJECTOR OPERATION ON ENGINE
Isolating Faulty Injector

If the engine is misfiring on one cylinder, it is reasonable to suspect that an injector is not functioning correctly.

NOTE A faulty injector will show up more readily at idling speed.

A faulty injector can be located by loosening the high pressure fuel line fitting on each injector in turn while the engine is running, Figure I-9. This will allow the fuel to escape before it reaches the injector and thereby cut out that particular injector. Use 3/4 inch open end wrench.

The cylinder least affecting engine performance is usually the one with the faulty injector. The recommended method of accurately determining how much engine performance is affected is as follows:

1. With the engine warmed up to at least operating temperature, check the engine idling speed (throttle in idle position) and the no load full governed speed (throttle fully open). Use an accurate tachometer as directed on Page I-32.
2. Cut out each injector in turn and check both the engine idling speed and the no load full governed speed. The injector that least affects the engine speed is probably the faulty one.

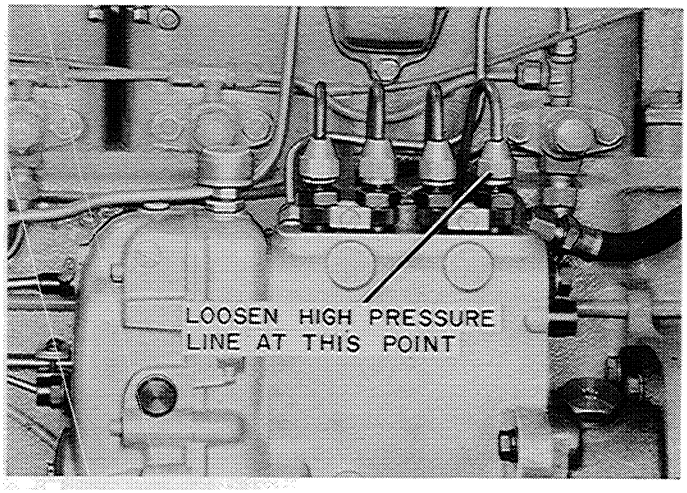

Figure I-9

NOTE Whenever an injector is suspected to be faulty, the Powrcel opposite it must be removed and checked as well as the injector. A plugged or damaged Powrcel will affect engine performance in much the same manner as a faulty injector. A faulty injector will also foul the Powrcel opposite it. Refer to Page I-26.

REMOVING AND INSTALLING INJECTOR
Tools Required

CD 506 Injector Puller
CD 513 Carbon Reamer
Brass Wire Brush
CD 500, 550 or CD 800 Tool Kit Torque Wrench

Removal

1. Make sure the engine and fuel lines are absolutely clean.
2. Disconnect the high pressure line and the fuel return lines from the suspected injector. Cap the exposed lines and fitting openings immediately with clean plastic caps.
3. Remove the two injector clamp nuts, Figure I-10.
4. Use the CD 506 Injector Puller Bar to remove the injector from the cylinder head, as shown in Figure I-10. Occasionally it may be necessary to use two bars if the injector sticks in the head.
5. **CAUTION** MAKE SURE THE GASKET IS REMOVED WITH THE INJECTOR. IF THE GASKET DOES NOT COME OUT WITH THE INJECTOR IT MUST BE REMOVED FROM THE CYLINDER HEAD. Make sure someone has not installed more than one gasket by mistake.

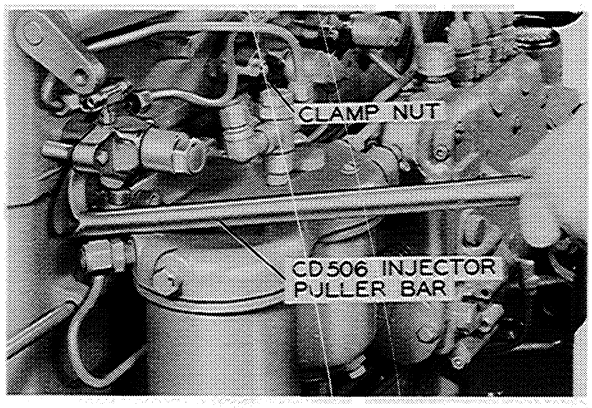

Figure I-10. Removing Injector

Place a plastic cap over the injector nozzle to protect the valve.

Installation

1. The injector recess in the cylinder head must be thoroughly cleaned. This cannot be over-emphasized. Pay particular attention to the seating surface at the nozzle end.

   Lack of a good clean contact surface can result in combustion gas blow-by, overheating, or cocking of the nozzle holder which might cause the nozzle valve to bind or stick.

   Clean the injector recess in the cylinder head using the CD 513 Carbon Reamer provided in the CD 500 Tool Kit or the CD 800 Tool Kit, as shown in Figure I-11.

   Blow the loose carbon out of the recess by turning it over with the starting motor.

   Clean the outer surface of the injector with the Brass Wire Brush. Wash the injector in Bendix Speed Clene, Carbon Tetrachloride, or a similar carbon solvent.
2. INSTALL A NEW GASKET ON THE INJECTOR NOZZLE, Figure I-4 and I-5. This gasket seals the nozzle clamp nut to the cylinder head, aids in positioning the injector in the head, and is important to the proper cooling of the injector. Be certain the old gasket has been removed.
3. Insert the injector slowly, using care not to strike the nozzle tip against any hard surface.

   CAUTION It is never necessary to force the injector into the cylinder head recess. If it does not slide in easily, investigate. All of the carbon may not have been removed.
4. Using a torque wrench, tighten the injector clamp nuts evenly to 14 to 17 pounds Figure I-12. Alternate from one nut to the other to prevent cocking the injector in the cylinder head.

   Tightening the clamp nuts evenly or more than a maximum of 17 pounds can cause destortion of the nozzle which would cause the nozzle valve to stick open and prevent the cylinder from firing.
5. Just before reconnecting the high pressure fuel line to the injector, turn the engine over with the starting motor until sufficient fuel is pumped through the line to flush it out thoroughly.

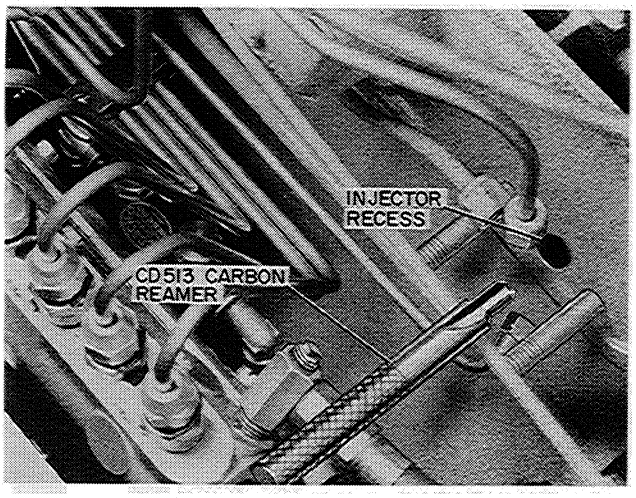

Figure I-11. Tool for Cleaning Carbon Out of Injector Recess

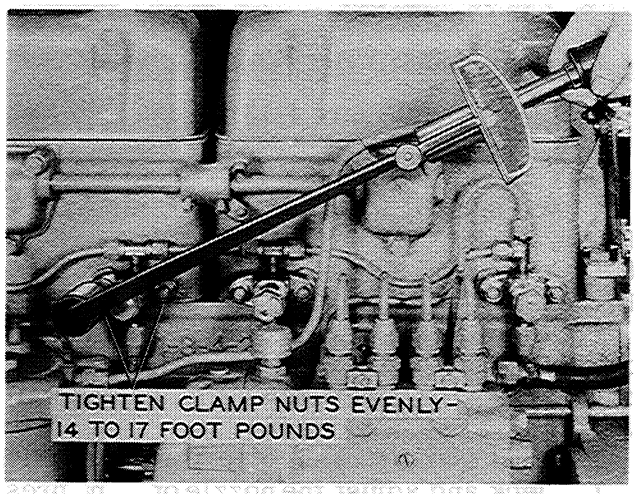

Figure I-12. Tightening Injector Clamp Nuts with a Torque Wrench

6. Reconnect the high pressure line and the return lines. Be sure the connections are tightened correctly. It will not be necessary to bleed the system if just the injector has been removed. The high pressure lines bleed automatically when the engine is turned over with the starting motor.
7. Start the engine and check all lines for leaks. Check the injector for blow-by past the nozzle holder. This may indicate insufficient tightening, a cocked injector, a dirty nozzle cap nut seating surface, or a damaged gasket. Such a condition must be corrected immediately.

NOZZLE (INJECTOR) TEST STAND

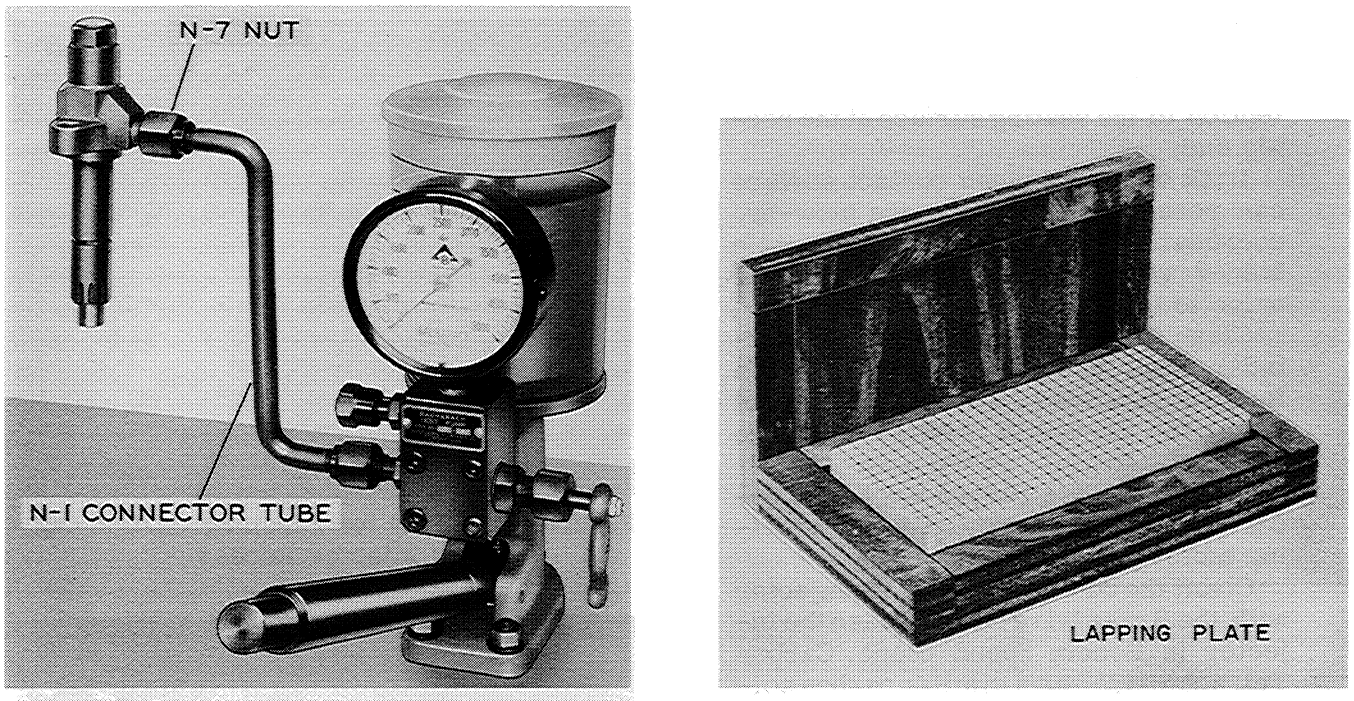

Figure I-13. Bacharach Nozzle Test Stand and Lapping Plate

An "Approved" Nozzle Test Stand (also lapping plate, cleaning tools and mutton tallow), is a required special tool item in the Authorized Case Dealer's Service Deprtment. The American Bosch Model TSE 7722-D Test Stand, the Bacharach Nozzle Test Pump (Code 65-030D) with the Connector Set 44 and the Robert Bosch Model EFEP60A are approved for use by Case Dealers.

To simplify the instructions, the test stand described in the following pages is the Bacharach only. Except for descriptions referring specifically to adjustments on the test stand itself, all of the following instructions will apply to all makes. Operating instructions are also furnished with the test stands.

The test stand is used to perform the following checks on the fuel injectors:

1. Check and adjust the nozzle opening pressure. This is a duplicate of the factory procedure.
2. Check the nozzle holder and nozzle assembly for fuel leakage.
3. Accurately check the nozzle spray pattern.

Fuel injectors must be checked on the test stand when performing the following service operations:

1. Whenever a nozzle has been removed from an injector and cleaned, the injector must be checked on the test stand prior to reinstalling it on the engine.
2. When a new nozzle assembly has been installed on an injector, the injector must be checked on the test stand prior to reinstalling it on the engine.
3. When a complete engine overhaul is being performed, the injectors should be removed and checked on the test stand.
4. When an injector is suspected to be the cause of unsatisfactory engine performance, it should be removed from the cylinder head and checked on the test stand prior to disassembling it or sending it to an Authorized Bosch Service Station.

IMPORTANT

ALWAYS CHECK THE PERFORMANCE OF A FUEL INJECTOR ON THE TEST STAND BEFORE DISASSEMBLING IT. IF IT CHECKS OUT SATISFACTORILY, THERE IS NO NEED TO DISASSEMBLE OR ADJUST IT.

TEST STAND INSTALLATION

Fuel injector disassembly and repair operations must be conducted in a clean, dust-free room especially set aside for this purpose. The room must have an air filtering system and must be completely separated from other service shop activities.

IMPORTANT

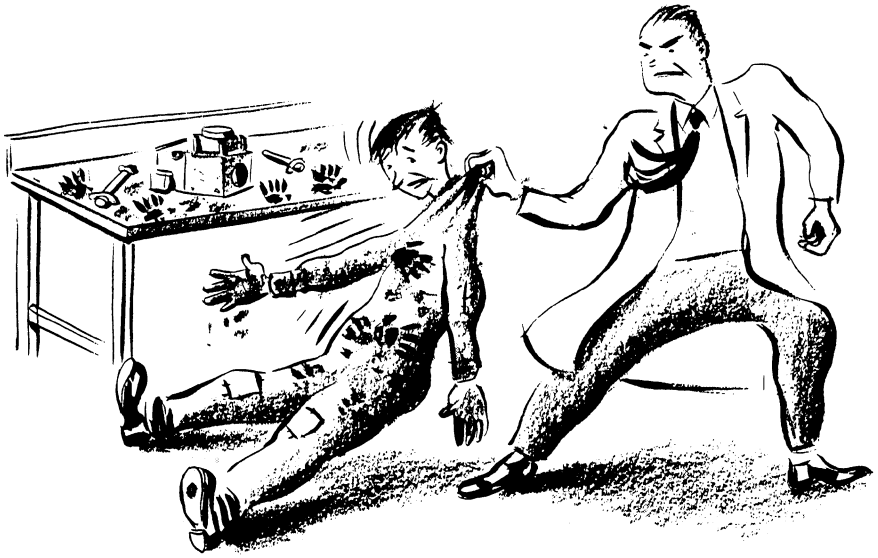

Injector nozzles can be completely ruined from careless handling!

Observe the following cleanliness precautions:

1. Clothing and hands must be clean before entering the injector repair room.

2. Do not perform any grinding or filing operations in the injector repair room.

3. Clean the floor with an oil mop frequently.

4. Keep cement floors painted to eliminate abrasive dust.

5. Use every precaution to keep the test oil clean. Cover the test stand when it is not in use. Keep the supply of test oil in clean sealed containers.

6. Prior to using an injector test stand for the first time, wash the lines, tank, etc., in clean fuel and blow it clean with filtered compressed air to eliminate any possibility of cuttings in the tubing causing damage to an injector.

7. Bolt the test stand to a clean sturdy bench.

TEST OIL RECOMMENDATIONS

Fill the fuel tank on the test stand with a clean testing oil. A special non-congealing and non-corrosive oil is recommended.

BOSCH TES 76141A TEST OIL

A special testing oil may be obtained through the Bosch Service Station or Distributor under Bosch Number TSE 76141A Oil.

THE USE OF DIESEL FUEL FOR TESTING INJECTORS

IMPORTANT

MOST DIESEL FUELS WILL FORM GUM IF LEFT IN THE TEST STAND FOR PROLONGED PERIODS. FOR THIS REASON DIESEL FUEL IS NOT RECOMMENDED FOR USE IN THE TEST STAND.

If it becomes absolutely necessary to use diesel fuel for testing injectors, always drain and flush the injector test stand with a fuel conditioner immediately after the test. DO NOT LEAVE DIESEL FUEL IN THE TEST STAND FOR ANY LENGTH OF TIME.

A Clean, Well Equipped Service Shop Builds Customer Confidence and Volume Sales.

PREPARING TEST STAND

1. After filling the test stand fuel tank, loosen the bleeder screw, Figure I-14.
2. When the oil flowing from the bleeder screw opening is free of air bubbles, retighten the screw.
3. Wash the connector tube in clean diesel fuel, blow it clean with filtered compressed air, and connect it securely to the test stand, as shown in Figure I-14. Operate the hand lever slowly until clean fuel flows from the tubing. Flush the tubing out thoroughly in this manner.
4. The test stand is now ready for use.

NOTE Complete maintenance instructions are furnished with the test stand. Follow the directions carefully.

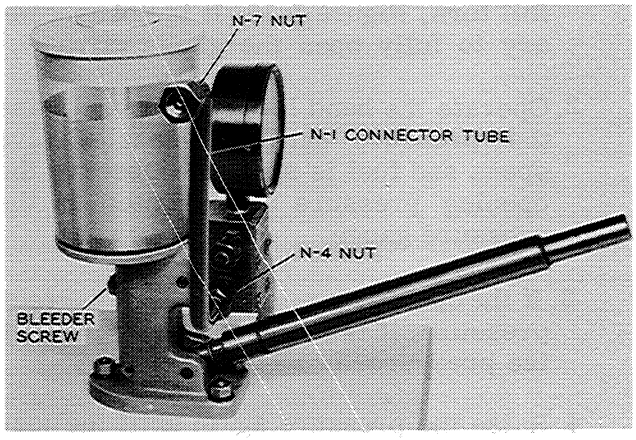

Figure I-14. Preparing Test Stand for Operation

TESTING INJECTOR

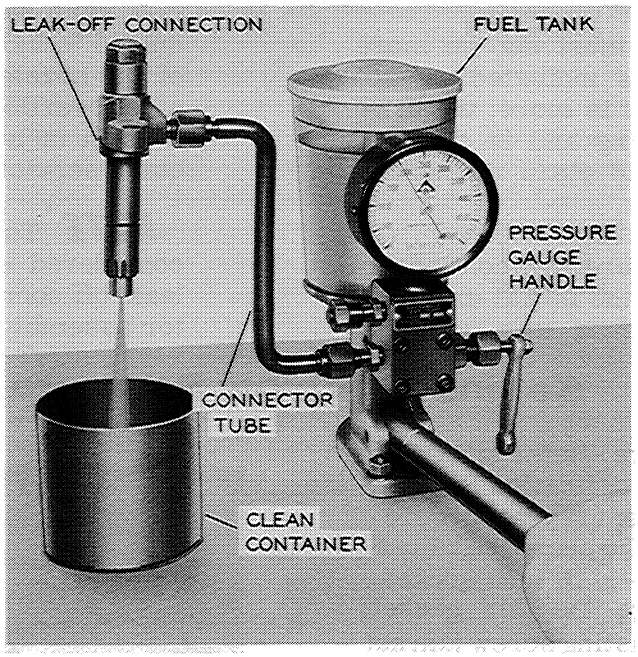

Figure I-15. Testing the Injector on a Bacharach Test Stand

CAUTION Do not place your hands or arms in front of the nozzle when testing an injector on the test stand. The fuel spray has sufficient penetrating power to puncture the flesh and destroy tissue. Refer to the "Warning" on Page I-3.

1. Remove the protective cap from the high pressure connection on the nozzle holder and from the nozzle end. Connect the injector to the test stand connector tube as shown in Figure I-15.

Aim the injector into a clean container. It is also advisable to place a clean lint-free rag over the container to prevent fuel bouncing back out of the container and making it difficult to determine the spray pattern. (Do not use laundered shop rags as they may contain tiny steel particles.)

2. Close the pressure gauge valve (turn it fully in) Figure I-15, and operate the hand lever reapidly for a few strokes to clear all air from the injector.

Testing for Leakage and Correct Opening Pressure

1. Open the valve approximately one full turn, Figure I-15. It is not necessary to fully open the gauge valve.

2. Operate the hand lever slowly and raise the pressure until the nozzle valve opens and fuel is sprayed. Observe the opening pressure as indicated on the pressure gauge.

3. If the opening pressure is the correct pressure, it is not necessary to reset the pressure.

4. Raise the pressure again until the nozzle valve opens. The instant the valve opens and fuel is sprayed, the pressure will drop sharply. This is the initial drop and is caused by the nozzle valve opening and closing.

   The initial drop must not be more than 300 pounds as indicated on the pressure gauge. If it is more, the nozzle valve is sticking and is slow in closing. Remove and clean the nozzle assembly.

   NOTE The pressure will continue to lower slowly after the initial drop. Be careful not to confuse this with the sharp initial drop.

5. Allow the pressure to drop and then slowly operate the hand lever again. Hold the pressure at 1850 to 1900 pounds and observe the end of the nozzle.

   The nozzle must remain dry at a pressure approximately 100 pounds lower than the recommended opening pressure. If a drop of fuel is observed forming at the nozzle valve projection, the valve is leaking.

6. While you are checking the opening pressure and the valve for leakage, observe the amount of fuel that comes out of the leak-off connection on the holder body, Figure I-15.

   A very small amount of fuel is required to lubricate the lapped surfaces of the nozzle valve and body. If excessive overflow from the leak-off connection is noted, the injector will require servicing.

   NOTE To determine what would be considered an excess flow from the leak-off connection, check a new injector assembly on the test stand.

Setting Opening Pressure

Correct Opening Pressure - Refer to "Specification Section.

To adjust the nozzle opening pressure, remove the cap that seals the pressure adjusting screw from dust (1-1/16 inch socket). Do not lose or damage the thin gasket. Loosen the pressure adjusting screw jam nut (9/16 inch wrench) and turn the adjusting screw in -- clockwise -- to increase pressure; counter-clockwise to decrease pressure, Figure I-16.

NOTE Although the opening pressure may be set within the recommended range, there must not be more than 100 pounds pressure difference between any of the four or six injectors in one engine.

Before replacing the pressure adjusting screw protective cap, inspect the gasket. If it is damaged, install a new one. Tighten the cap, then back if off and retighten it to obtain a good seat with the gasket.

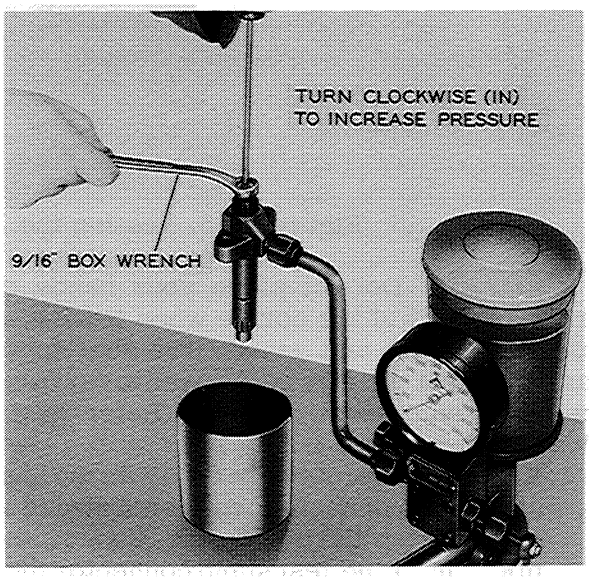

Figure I-16. Adjusting Nozzle Opening Pressure

THE FOLLOWING IS A LIST OF CAUSES AND REMEDIES FOR INCORRECT OPENING PRESSURE AND NOZZLE VALVE LEAKAGE:

DESCRIPTION	CAUSE	REMEDY
1. Nozzle opening pressure too high	a. Pressure adjustment incorrect.	a. Adjust as directed on Page I-14
	*b. Nozzle valve sticking in nozzle body.	b. Nozzle must be removed and serviced, Page I-17.
	*c. Leak-off blocked	c. Nozzle holder assembly must be disassembled and cleaned by Bosch Service Station.
2. Nozzle opening pressure too low.	a. Pressure adjustment incorrect.	a. Adjust pressure as directed on Page I-14.
	*b. Nozzle valve sticking in nozzle body.	b. Nozzle must be removed and serviced, Page I-17.
	c. Pressure adjusting screw or spring damaged or broken.	c. Send holder assembly to Bosch Service Station for repairs.
3. When nozzle valve opens, initial pressure drop is more than 300 pounds.	* Nozzle valve sticking in nozzle body.	Disassemble and clean nozzle Page I-17.
4. Leakage at the nozzle	*a. Nozzle valve leaking due to damaged seat or valve.	a. Install a new nozzle assembly, Page I-23.
	*b. Nozzle valve sticking.	b. Disassemble and clean nozzle, Page I-17.
	c. Lapped surfaces of nozzle body and holder warped or damaged.	c. Clean and check lapped surfaces, Page I-17. Install new nozzle, new holder or complete new injector as required.
5. Excess overflow from leak-off connection.	*Excessive leakage past nozzle valve.	Replace complete nozzle assembly, Page I-23.
6. Leakage between nozzle and holder.	a. Nozzle cap nut insufficiently tightened.	a. Tighten cap nut with torque wrench, Page I-23.
	d. Dust, grit, or scale between lapped surfaces of nozzle.	b. Remove nozzle and thoroughly clean the lapped surfaces, Page I-17.

* ***NOTE*** The following causes of injector failure can be attributed to poor fuels, and to poor fuel storage and filter maintenance practices on the part of the customer. Be sure to bring them to his attention.

1. Gum and varnish deposits cause the nozzle valve to stick and generally make injector operation sluggish. This is a result of poor fuel storage practices or failure to prepare the engine properly for dead storage. In those areas where gum and varnish in the fuel presents quite a problem it may be necessary to recommend to the customer that he use a "Case Diesel Fuel Conditioner". Refer to "Fuel Specification" Section in the operator's manual.

2. Moisture condensation in the fuel will score or corrode the nozzle valve. Abrasives in the fuel will scratch and prematurely wear the valve and valve seat. These are a result of both poor fuel storage practices and poor maintenance of the engine fuel system.

3. The use of diesel fuels that do not meet CASE specifications can gum or damage the injectors. This is especially true of many so called "Premium" fuels that have little or no lubricating value.

Correct Spray Pattern



Figure I-17. Correct Spray Pattern

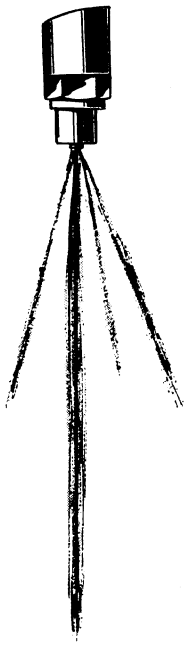

Figure I-18. Incorrect Spray Pattern



Figure I-19. Incorrect Spray Pattern

If the injector passes the opening pressure and leakage tests, it must next be checked for the correct spray pattern as follows:

1. Close the pressure gauge valve to prevent damaging the gauge.
2. Operate the hand lever slowly until the nozzle valve opens; then stroke the lever with light quick strokes so fuel is injected approximately 100 times a minute.
   NOTE If the handle is operated too slowly, the fuel will not atomize and will come out streaky giving a false spray pattern.
3. Observe the spray pattern. It must appear almost a solid thin stream with a small envelope of fine mist surrounding it, as shown in Figure I-17. This envelope of mist may be almost invisible on some injectors. Pintle type injectors should not be rejected because a heavy center core is observed.
4. If any small streamers of fuel shoot off to one side, or the stream of fuel is off to one side as shown in Figure I-19, or if the spray pattern is shaped similar to the one illustrated in Figure I-18, the nozzle must be removed, cleaned and checked, Page I-17.

NOTE When you operate the test stand hand lever at 100 strokes per minute, you may or may not hear the normal "chatter" caused by the nozzle valve snapping closed against its seat. Whether you hear "chatter" or not, a pintle type injector is in satisfactory condition as long as it has the correct spray pattern, opening pressure, an no leakage is present.

Injectors That Pass All Tests

If the injector passes the opening pressure leakage, and spray pattern tests, reinstall it in the engine cylinder head. Do not take it apart or adjust it for any reason.

Before installing the injector in the cylinder head, clean the nozzle holder, the nozzle body and the nozzle cap nut or carbon -- particularly the sealing surfaces.

Use a clean soft cloth soaked in a carbon solvent such as Bendix Speed Clene, Acetone or Carbon Tetrachloride. Clean diesel fuel may also be used. Do not attempt to scrape the carbon off the surface of the nozzle body from which the valve projects. Serious damage may result. Rinse the injector in clean diesel fuel after cleaning.

Make sure the recess in the cylinder head is cleaned of carbon and that a new copper gasket is installed on the injector, as described on Page I-9.

DISASSEMBLY-CLEANING-CHECKING ASSEMBLY OF INJECTOR

Tools Required

Lapping Plate for cleaning nozzle and holder.

Vise equipped with brass shields over the jaws.

Minimum of 3 clean metal containers for washing parts.

Can of Bendix Speed Clene.

Torque wrench and a 3/4 inch deep socket.

General shop service tools.

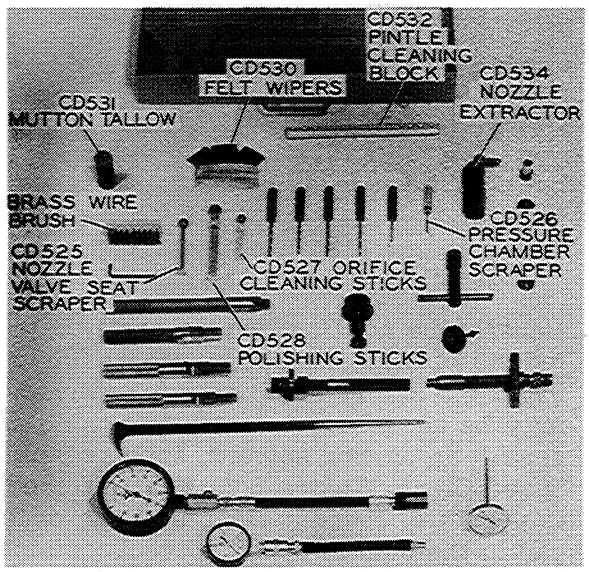

Figure I-20. Special Nozzle Cleaning Tools

IMPORTANT

THE NECESSITY FOR CLEANLINESS CANNOT BE OVER-EMPHASIZED. A CLEAN WORK BENCH, CLEAN WASHING FLUID AND FLUID CONTAINERS, CLEAN TOOLS, CLEAN CLOTHES, AND CLEAN HANDS ARE ESSENTIAL TO PRODUCE SATISFACTORY RESULTS.

THE TESTING AND REPAIR OF INJECTORS MUST BE CONDUCTED IN A SPECIAL ROOM COMPLETELY SEPARATED FROM OTHER SERVICE SHOP ACTIVITIES.

Removing Nozzle Assembly

1. Wipe all dirt and loose carbon from the injector using a clean, lint free cloth. It is also advisable to place a large clean sheet of paper on the work bench.

2. Clamp the nozzle holder in a vise, as shown in Figure I-21. Remove the nozzle cap nut using a 3/4 inch deep socket as shown. Place the cap nut in a clean container filled with clean diesel fuel.

3. Lift the nozzle assembly off the holder. Replace the nozzle cap nut on the holder to protect the lapped surface of the holder.

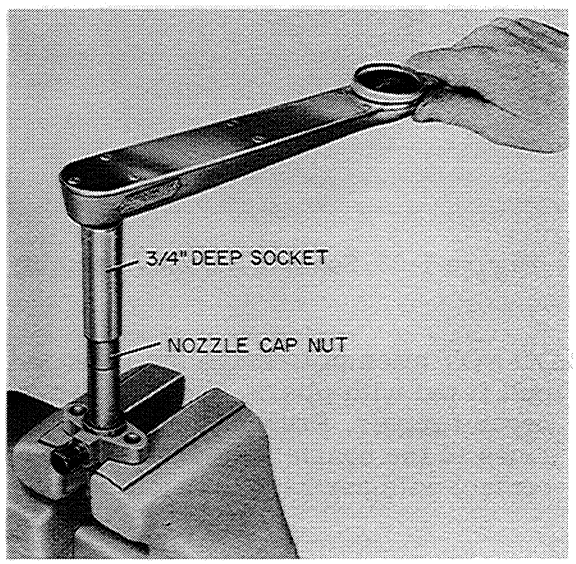

Figure I-21. Removing Nozzle Cap Nut

Disassembly of Nozzle Assembly

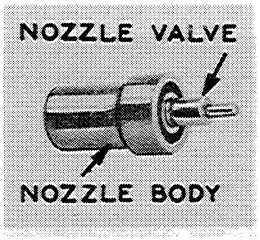

Figure I-22

1. Usually the nozzle valve can easily be pulled out of the nozzle body with the fingers, Figure I-22. In some cases, however, it may be necessary to soak the nozzle assembly in carbon solvent, such as Bendix Speed Clene, Figure I-23, before removal is possible. Place a clean soft rag or felt pad in the bottom of the solvent container to prevent the polished surfaces of the nozzle from coming into contact with the metal container. Do not place any other parts in the container.



Figure I-23. Soaking Nozzle Assembly

2. DO NOT attempt to drive the valve out or pull it out with pliers. You will damage it beyond repair. Prevent the polished surfaces of the nozzle body from coming into contact with any hard substances.



Nozzles that cannot be readily disassembled after soaking in carbon solvent, should be placed in the CD-534 Hydraulic Nozzle Extractor, Figure I-24. The CD-534 Hydraulic Nozzle Extractor can be installed on either the Bacharach or American Bosch Nozzle test stand. The nozzle extractor utilizes the hydraulic pressure developed by the nozzle test stand to force the nozzle valve out of the nozzle body.

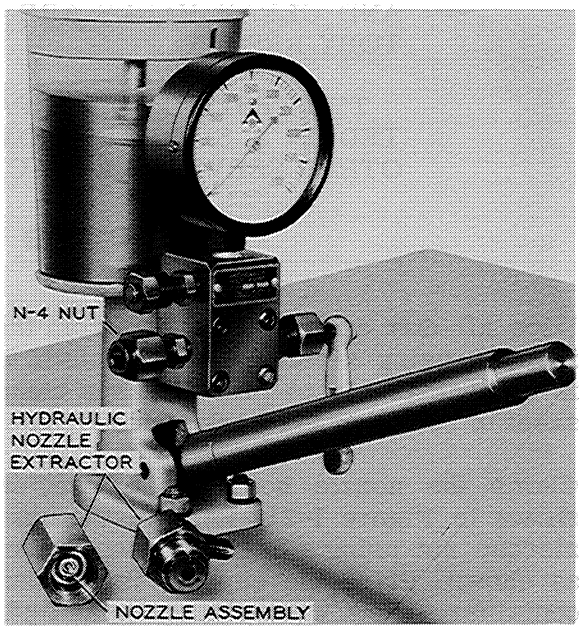

Figure I-24

To use the CD-534 Nozzle Extractor on a Bacharach Test Stand:

a. Remove N-1 connector tube and N-7 Nut from test stand.

b. Install the stuck nozzle assembly in the nozzle extractor, Figure I-24.

c. Install the nozzle extractor on the test stand, Figure I-25.

d. Operate the test stand hand lever and build up pressure in the nozzle extractor to free the stuck nozzle valve. A free nozzle will be indicated by a sudden pressure drop on the test stand pressure gauge.

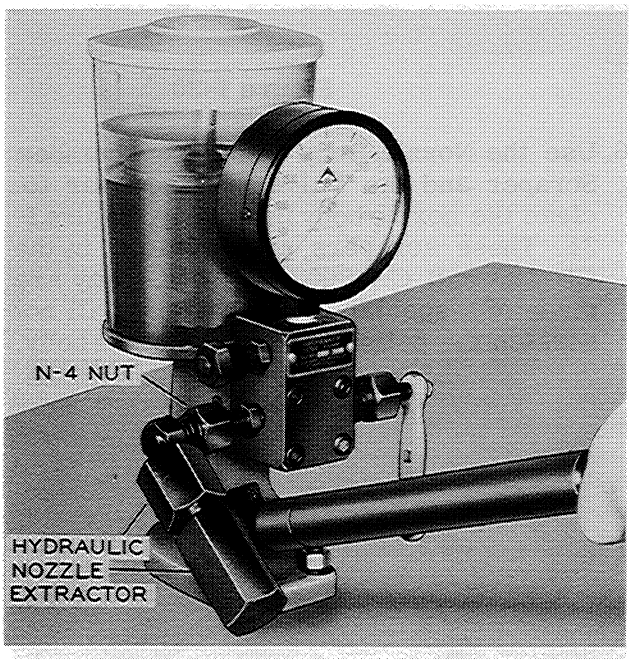

Figure I-25. CD-534 Nozzle Extractor Installed on Test Stand

IMPORTANT

If the Nozzle Valve cannot be freed by the 4500 to 5000 PSI developed by the test stand, the nozzle valve assembly should be discarded as the Nozzle Valve and Body are probably scored.

3. After the valve has been withdrawn from the nozzle body, Figure I-26, clean the valve with mutton tallow on a soft cloth or felt pad. If a jeweler's lathe is available, the valve may be rotated at low RPM (maximum of 100 RPM) to perform the cleaning operation. Clamp the stem end of the valve only in the lathe chuck.

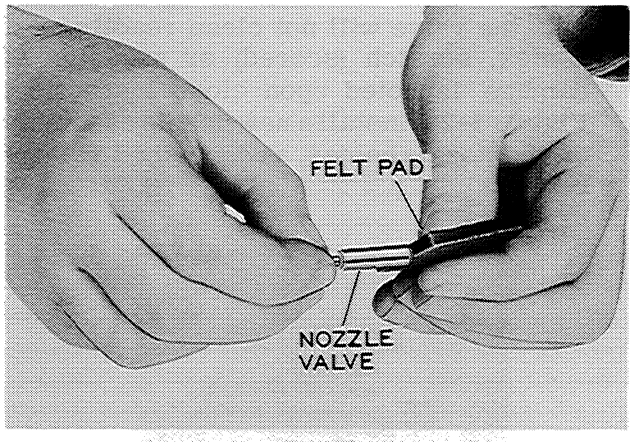

Figure I-26

The Pintle Cleaning Block, Figure I-27 provided in the CD-550 or CD-800 Tool Kits will be helpful in removing carbon from around the pintle on the nozzle valve.

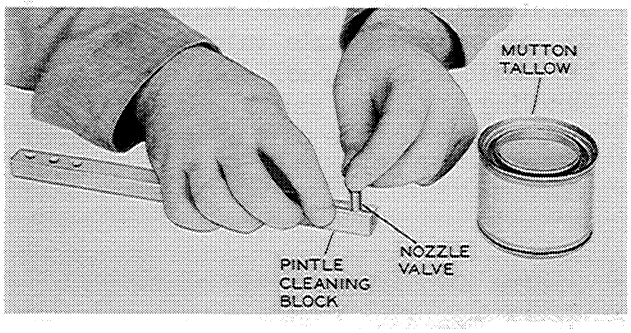

Figure I-27

To clean the nozzle valve pintle:

a. Coat the pintle end of the nozzle valve with mutton tallow.

b. Place the pintle end of the nozzle valve in one of the detents in the Pintle Cleaning Block. Squeeze the sides of the block together and slowly rotate the valve in the block, Figure I-27.

c. Wipe the pintle off with a clean piece of felt. Repeat Step b above if pintle is not clean.

CAUTION

Hard or sharp tools, emery cloth, crocus cloth, jeweler's rouge, grinding compounds, or other abrasives must never be used to clean the valve or any part of the nozzle assembly.

If the valve will not clean readily,or if a nick, scratch (scored) or any sign of damage is noted upon close inspection, Figure I-28, install a new nozzle assembly on the nozzle holder, as described on Page I-23.

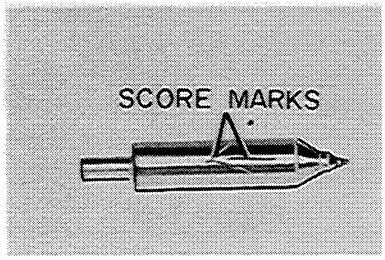

Figure I-28

NOTE Gum and varnish deposits on the nozzle assembly, Figure I-29, nicks and scratches on the nozzle valve, Figure I-31, or scored nozzle valves can usually be attributed to poor fuel storage and handling practices and to poor fuel system maintenance on the part of the customer. Be sure to bring this to his attention.

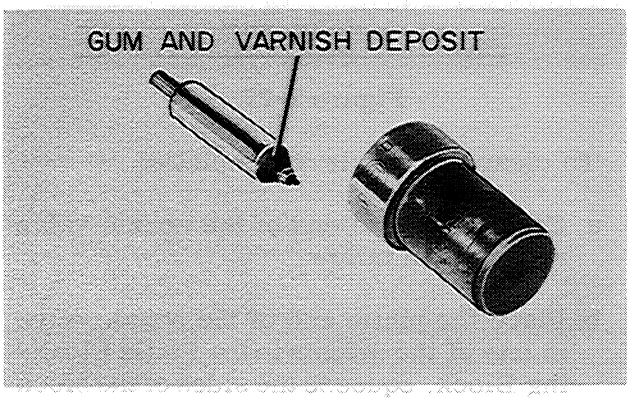

Figure I-29

4. When the nozzle valve is clean, rinse it in clean diesel fuel. While you are cleaning the nozzle body, place the valve carefully in a separate container of clean diesel fuel. The container must have a clean soft cloth or felt pad in the bottom so the valve does not touch the hard surface of the container. Lay the valve in the container, do not drop it in. Do not place any other parts in the container.

5. Except for the lapped surface of the nozzle body that contacts the holder and forms a seal, clean the outer surfaces of the nozzle body with the Brass Wire Brush, Figure I-30. Do not use any hard object to scrape carbon from the surface around the opening for the valve. Serious damage will result.

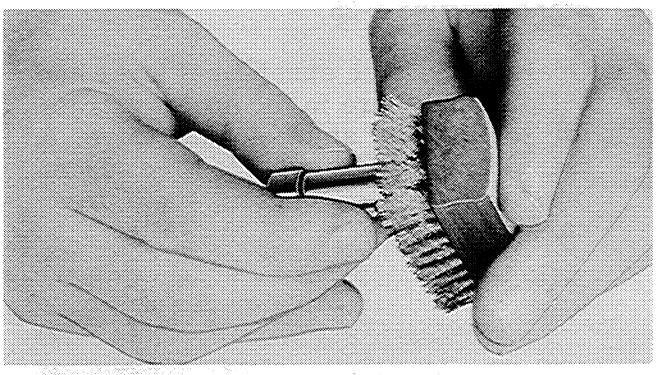

Figure I-30

6. Use the Nozzle Body Pressure Chamber Scraper and the Valve seat scraper to clean the nozzle body internally, Figure I-31. These scrapers are provided in the CD-500 and CD-800 Tool Kits. They are made of a special soft metal that will not scratch the polished surfaces of the body.

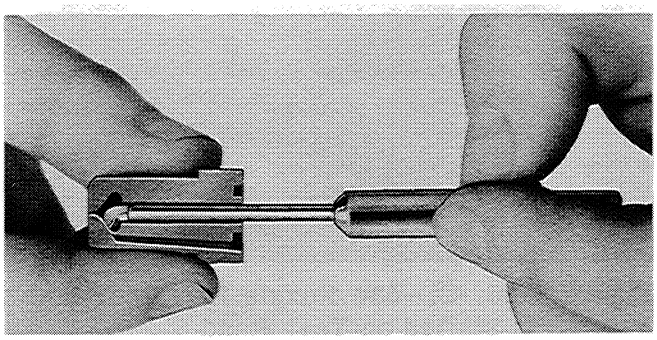

Figure I-31. Cleaning the Nozzle Body

7. Clean the nozzle valve opening in the nozzle body with the valve seat scraper, Figure I-32.

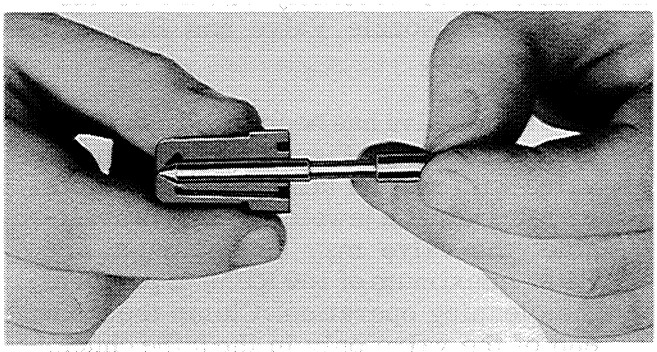

Figure I-32. Cleaning Nozzle Valve Opening

8. Apply mutton tallow to a polishing stick, (CD-550 or CD-800 Tool Kit) and thoroughly clean the valve seat in the nozzle body, Figure I-33.

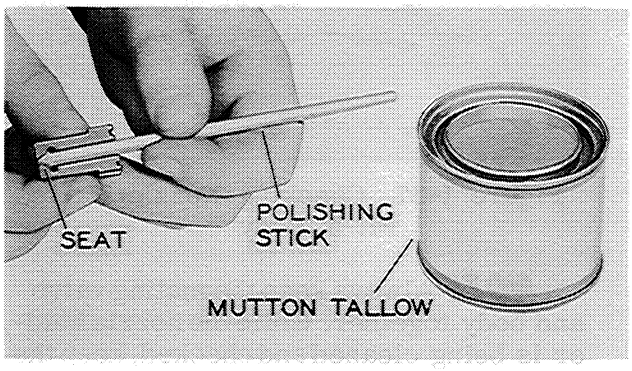

Figure I-33

9. Apply mutton tallow to an orifice cleaning stick, (CD-550 or CD-800 Tool Kit) and thoroughly clean the orifice in the nozzle valve body, Figure I-34.

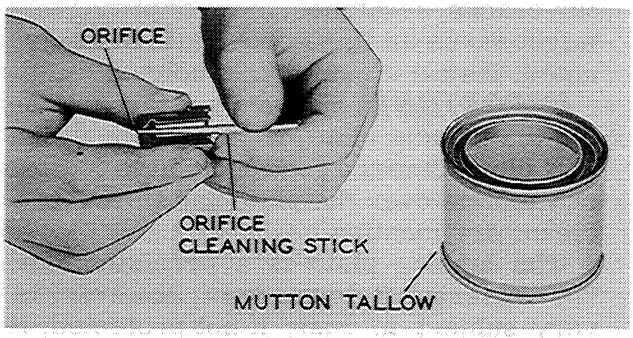

Figure I-34

10. Cut a piece of clean felt pad (CD-550 or CD-800 Tool Kit) approximately 5/16 inch wide, Figure I-35. Apply mutton tallow to the pad and remove any remaining deposit from the valve seat and pressure chamber area of the nozzle body.

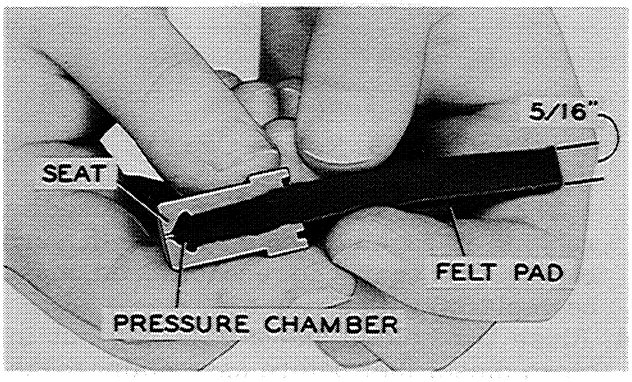

Figure I-35

11. The lapped surface of the nozzle body that contacts the holder and forms a seal must be CLEANED on the Lapping Plate with clean mutton tallow. DO NOT USE LAPPING COMPOUND.

a. Wipe the surface of the lapping plate with a clean soft cloth.

b. Smear clean mutton tallow evenly on the plate. Use enough tallow so there is no danger of a dry surface contacting the nozzle body. Smear a thin film of mutton tallow on the lapped surface of the nozzle body.

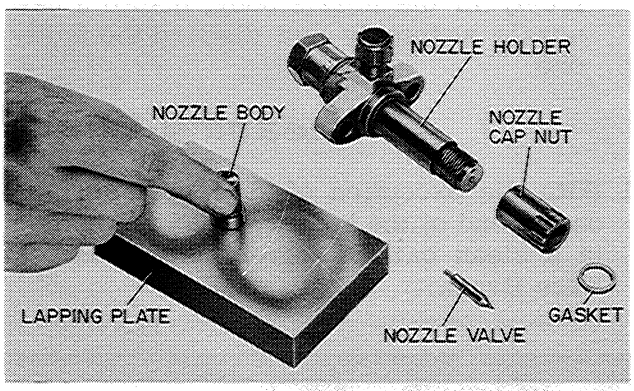

Figure I-36. Cleaning the Nozzle Body on a Lapping Plate

c. Hold the body so even pressure will be exerted on the entire surface. Use just enough pressure to insure contact.

d. Move the nozzle body smoothly and steadily as if you were writing a "Figure 8", as shown in Figure I-36. Use care not to rock the body.

e. The lapped surface should be cleaned until all carbon or discoloration is removed and a polished "mirror" surface is obtained. Rinse the body in clean diesel fuel. Inspect the polished surface closely for cracks, scratches, nicks, or pitting that might cause an imperfect seal. If any are noted, install a new nozzle assembly and discard the damaged one.

THE NOZZLE BODY AND NOZZLE VALVE ARE LAPPED TO FORM A MATED ASSEMBLY AND ARE NOT INTERCHANGEABLE FOR REPAIRS.

12. Thoroughly rinse the valve and nozzle body in clean diesel fuel before reassembly.
13. The valve must be free in the body. To check this, lift the valve about 1/3 of its length out of the body. The valve should slide down to its seat without aid when the assembly is held at a 45 degree angle Figure I-37.

    If it does not, clean the valve and body again thoroughly and recheck. If necessary, work the valve in the body with clean mutton tallow to clean any varnish or carbon from the inner surface of the body.

    If the valve cannot be made to slide freely in the nozzle body, install a new nozzle assembly and discard the faulty one.

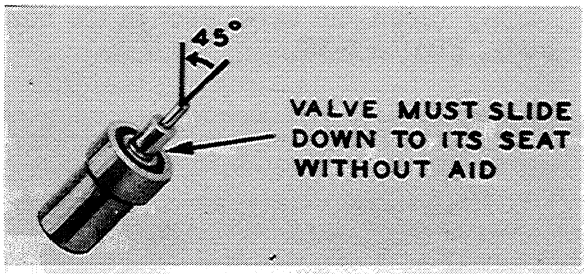

Figure I-37. Checking Nozzle Valve Fit In Body

NOTE Always keep the mating valve and body together. While the nozzle holder is being cleaned and checked, keep the valve in the nozzle body to protect the valve.

Cleaning-Checking Nozzle Assembly

1. With the exception of the lapped surface on the end of the holder, clean the holder in a clean carbon solvent using a Brass Wire Brush.

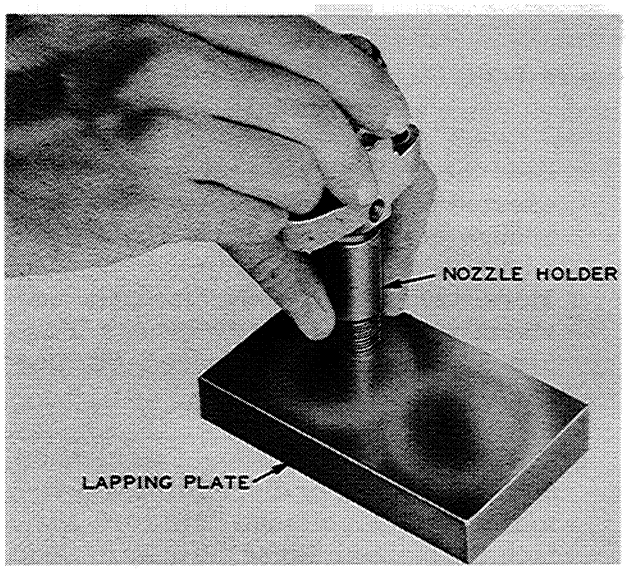

Figure I-38. Cleaning Nozzle Holder on Lapping Plate

2. The lapped surface on the end of the holder must be CLEANED on the Lapping Plate with clean mutton tallow, Figure I-38. DO NOT USE LAPPING COMPOUND. Follow the same instructions given for cleaning the nozzle body.

   The lapped surface should be cleaned until all carbon or discoloration is removed and a polished "mirror" surface is obtained. Rinse the body in clean diesel fuel. Inspect the polished surface closely for cracks, scratches, nicks or pitting that might cause an imperfect seal. If any are noted, install a new nozzle holder.

   IMPORTANT When you are through using the lapping plate, wipe it clean with a soft cloth. Smear a good protective coating of vasoline over the plate and store it in a clean, dry location.

   The lapping plate is a precision tool. The material it is made of, however, is very subject to rust. If not protected, it can rust overnight.
3. Remove all carbon deposits on both the inner and outer surfaces of the nozzle cap nut, Figure I-39. Inspect it for cracks due to over-tightening, a damaged lower seating surface or damaged threads.

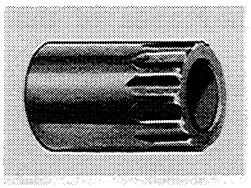

Figure I-39. Nozzle Cap Nut

The seating surface may be restored by rubbing it carefully on emery cloth. Any cap nut that cannot be reconditioned, must be replaced with a new one.
4. Rinse the holder and nozzle cap nut in clean diesel fuel before assembling to the nozzle.

Installing Nozzle on the Holder

1. Clamp the nozzle holder in the vise, as shown in Figure I-40.

   NOTE If you are installing a new nozzle assembly, very carefully remove the protective wrapper and wash the nozzle body and valve in clean diesel fuel. This must be done to remove the rust preventive material with which the nozzle is coated for storage purposes.
2. Rinse the lapped surface at the end of the holder with clean diesel fuel. Rinse the nozzle valve and body in clean fuel and place the nozzle assembly in position on the holder.

   After the final rinse, do not touch the lapped surfaces with your hands as moisture from them is corrosive.
3. Very carefully place the nozzle cap nut over the nozzle. Be sure the stem of the valve is located in the hole in the holder body.

Robert Bosch Nozzle Cap Nuts Only

If a Robert Bosch nozzle cap nut is being installed, simply tighten the cap nut to 50-55 foot pounds.

Note: Robert Bosch cap nut can be identified by a centering step. Refer to inset, Figure I-40.

American Bosch Nozzle Cap Nuts Only

The nozzle must be exactly centered in the cap nut. To insure this, the Nozzle Centering Sleeve must always be used to install the American Bosch cap nut only. The centering sleeve is provided in both the CD500 and CD-800 Tool Kits. Wash the sleeve in clean diesel fuel before using it.

CAUTION

Do Not Use a centering sleeve to center the nozzle assembly in the cap nut when installing a Robert Bosch nozzle cap nut. The Robert Bosch cap nut is designed with a self centering step, Figure I-40 and if installed with a centering sleeve can cause damage to the nozzle assembly.

a. Carefully fit the centering sleeve over the nozzle body, as shown in Figure I-40. The tapered end centers the nozzle body within the cap nut bore.
b. With the centering sleeve in place, tighten the American Bosch Nozzle Cap Nut as much as possible with your fingers. Keep the sleeve free.

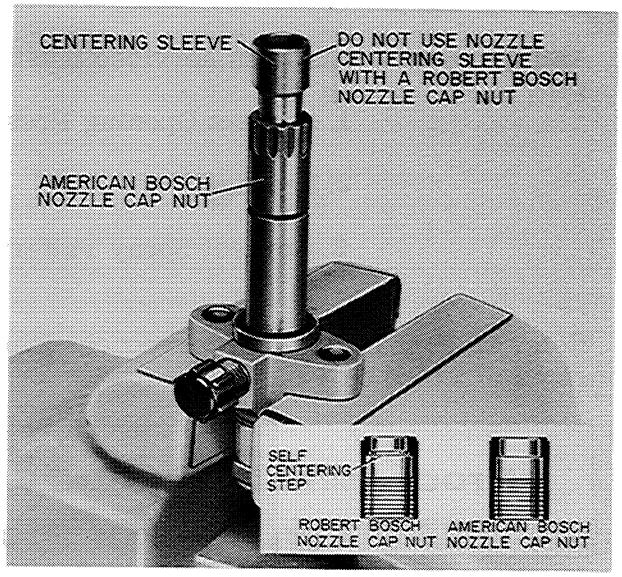

Figure I-40. Positioning Nozzle Body with Nozzle Centering Sleeve

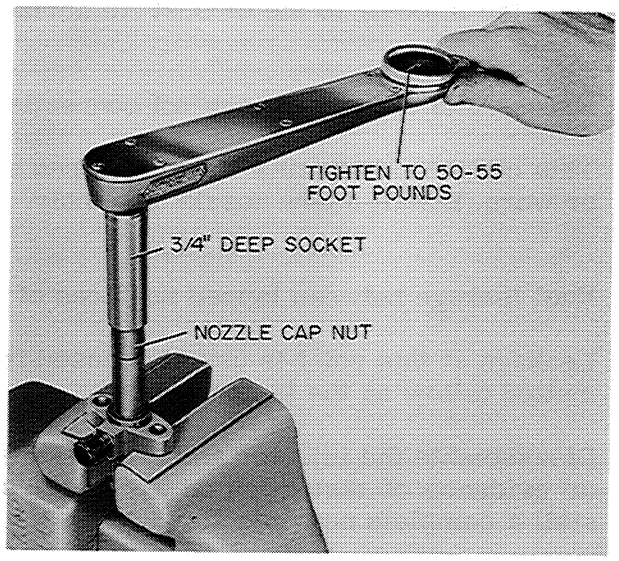

Figure I-41. Tightening Nozzle Clamp Nut with a Torque Wrench

c. Using a torque wrench and a 3/4 inch deep socket, carefully tighten the cap nut to 50 to 55 pounds, Figure I-41.

   Keep the sleeve free while tightening the nut.
d. After the cap nut is tight, pull the centering sleeve straight upward and out of the nozzle. If you have tightened the cap nut correctly, the sleeve will come out easily.
4. The injector is now reassembled and ready for checking on the Nozzle Test Stand.

Rechecking Injector After Servicing

An injector that has been serviced must be checked on the Nozzle Test Stand for:

1. Correct Opening Pressure
2. Leakage
3. Correct Spray Pattern

Refer to Page I-13 for the correct checking procedure. If necessary, adjust the opening pressure as directed on Page I-14.

Procedure to Follow if Repaired Injector Does Not Check Out Properly on Test Stand

1. Correct opening pressure cannot be obtained.

   Send the injector to the closest Authorized Bosch Service Station for repairs.

2. Excess fuel leakage at leak-off connection.

   This condition indicates that the lapped surfaces between the nozzle valve body are damaged or worn. Install a new nozzle assembly.

3. Fuel leakage between lapped surfaces of nozzle assembly and nozzle holder.

   Leakage at this point is usually caused from failure to clean the two surfaces properly with mutton tallow on the lapping plate.

   Disassemble the injector and check the lapped surfaces. If there are any scratches, cracks, or evidence of distortion on the lapped surface of the nozzle holder or the nozzle body, install a complete new injector.

4. "Dribble" or leakage from the nozzle valve.

   When a drop of fuel forms at the nozzle valve opening at less than 1750 pounds pressure, it indicates that the valve seat or the valve is damaged or dirty. Remove the nozzle assembly and again clean it thoroughly. If leakage is still present, replace the nozzle assembly.

5. Improper spray pattern.

   An improper spray pattern, as illustrated in Figures I-20 and I-21, indicates that the nozzle assembly is dirty or damaged. Remove the nozzle assembly and reclean it thoroughly. If the spray pattern is still incorrect upon rechecking the injector, replace the nozzle assembly.

IMPORTANT

WHEN AN IMPROPER SPRAY PATTERN OR FUEL LEAKAGE IS NOTED WHILE TESTING AN INJECTOR ON WHICH YOU HAVE INSTALLED A NEW NOZZLE ASSEMBLY, CHECK YOUR REPAIR PROCEDURE AS FOLLOWS:

1. Did you disassemble the new nozzle and wash both the valve and body in clean diesel fuel to remove the protective coating before assembling it to the holder?

2. Is your injector repair room absolutely clean and free of dust?

3. Are you using lint free cloths? Remember -- Do not use laundered shop cloths. These cloths may contain metal particles that will ruin an injection nozzle.

4. Is the oil in your injector test stand absolutely clean? Is the test stand high pressure tubing connection for the injector absolutely clean? Is the test stand oil filter in place and in good condition? Carelessness in caring for the injector test stand will result in pump abrasives directly into the injector.

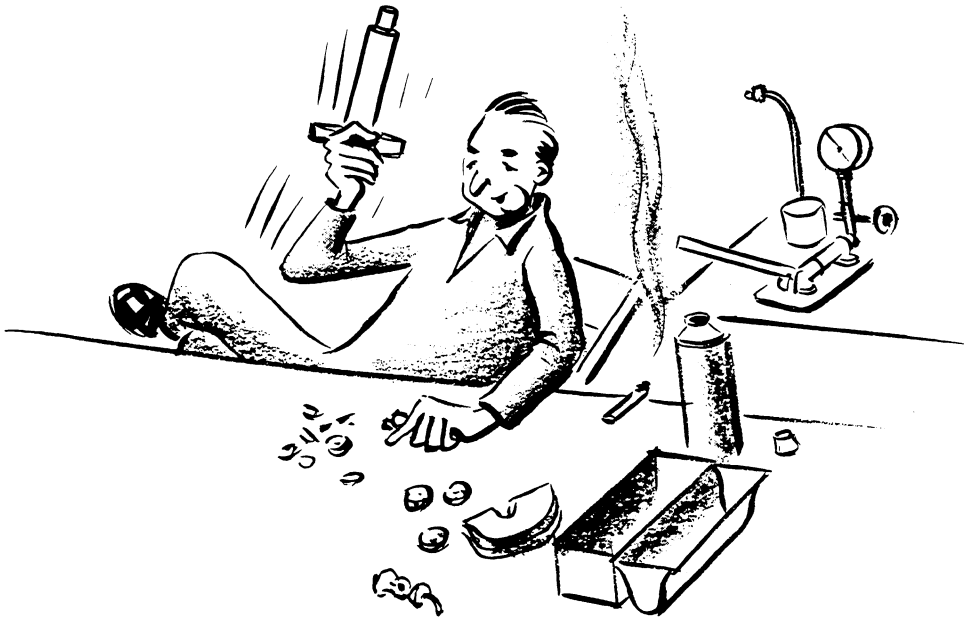

5. Did the new nozzle body and nozzle valve become mismated or damaged from dropping or careless handling before installation?

CASE POWRCEL

General Description

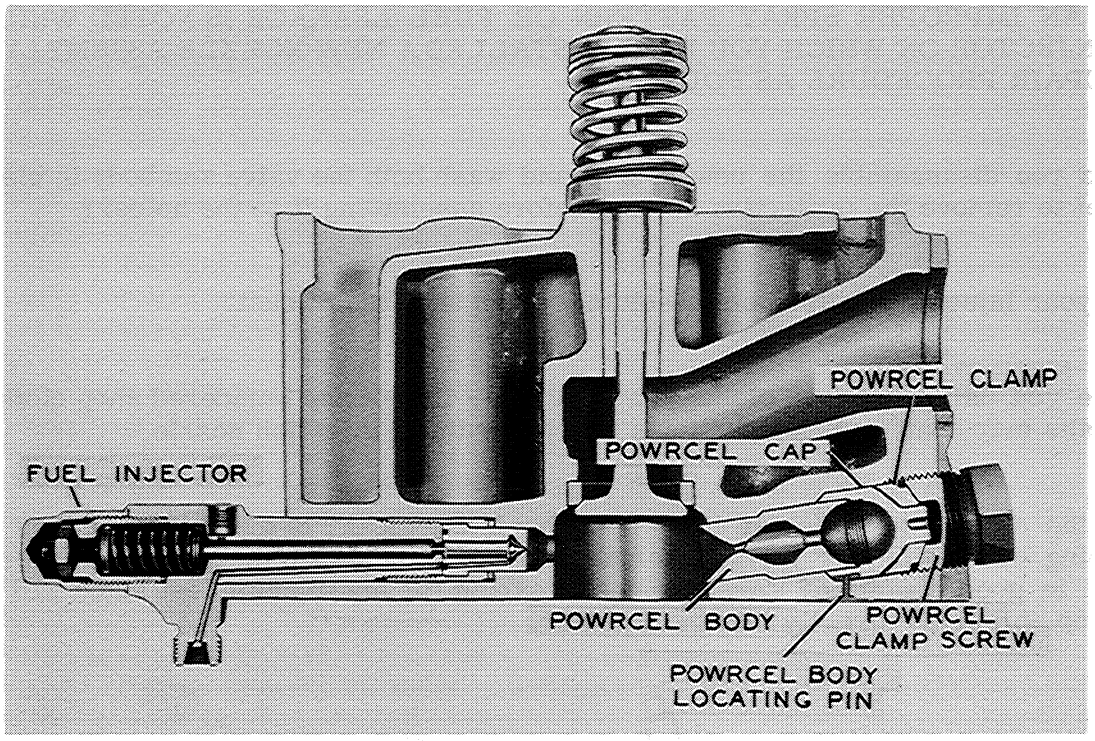

Figure I-42. Cutaway View of Powrcel and Cylinder Head Assembly

A Case Powrcel is located in the cylinder head exactly opposite each of the fuel injectors, as shown in Figure I-42. It is the function of the Powrcel to uniformly control the combustion process in each cylinder so that every atom of fuel injected is used to the greatest advantage. The Powrcel and the fuel injector are a team. When one is checked or serviced, the other must also be checked and serviced.

Each Powrcel consists of three parts:

1. The Powrcel Clamp Screw

2. The Powrcel Cap

3. The Powrcel Body

The stepped surfaces of the Powrcel body and their contacting surfaces in the cylinder head recess are a lapped fit to form a seal.

A Powrcel Body Locating Pin holds the body in position in the cylinder head recess and prevents it from being installed incorrectly, Figure I-42. The pin is installed in the cylinder head and protrudes into the bottom of the Powrcel recess. A groove is provided in the Powrcel Body which must be aligned with the pin in order to install the body in the head.

Servicing the Case Powrcel

The Case Powrcel will seldom require servicing as the efficient design of the Powrcel, together with that of the combustion chamber, gives it a self-cleaning action.

In almost every instance, a carbon fouled or burned Powrcel can be traced to: an improperly functioning injector, using fuel that does not meet Case specifications, or as a result of repairing or replacing a Powrcel without using the proper tools and installation procedure.

NOTE A carbon fouled Powrcel, a burned or damaged Powrcel, or an improperly installed Powrcel will be evidenced by:

1. Engine vibration (misfiring).

2. Exhaust smoke, especially under load.

3. Loss of power.

4. Pronounced detonation (knock) at low engine speeds.

WHEN A POWRCEL IS REMOVED FOR CHECKING AND IS FOUND TO BE CARBON FOULED OR BURNED, CHECK THE FUEL INJECTOR OPPOSITE IT.

Tools Required

CD 500, 550 or CD 800 Tool Kit

CD 511 Powrcel Cap Puller

CD 512 Powrcel Body Puller

CD 516 Carbon Reamer for Powrcel Recess

Mutton Tallow for Use with Lapping

Brass Wire Brush

Lapping Plate

Torque Wrench with 1-3/8 Inch Socket

General Shop Service Tools

Removing Powrcel

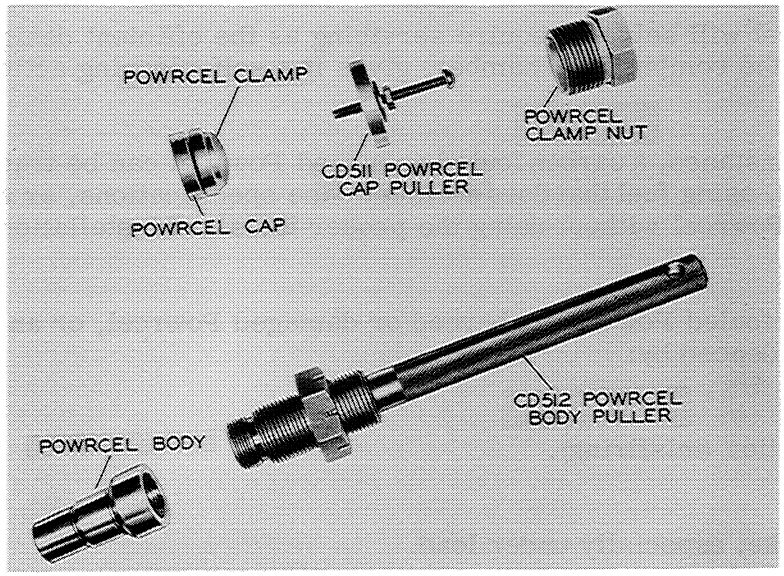

Figure I-43. Powrcel Parts and Tools Required to Remove Them From Cylinder Head

1. Clean the left hand side of the engine thoroughly.

2. Using a 1-1/8 inch socket, remove the Powrcel Clamp Screw. It will be necessary to remove the intake manifold in order to remove all of the Powrcels. Refer to the section covering "Valve System and Cylinder Heads".

3. Pull the Powrcel Cap, Figures I-43 and I-44 using the CD 511 Puller from the CD 500 or CD 800 Tool Kit.

4. Using the CD 512 Puller from the CD 500 or CD 800 Tool Kit, pull the Powrcel body. Refer to Figures I-43 and I-45.

NOTE Keep each Powrcel assembly together. The Powrcel Cap and Body are lapped to form a mated assembly. Make sure each assembly is identified after removal so it will be reinstalled in the same cylinder.

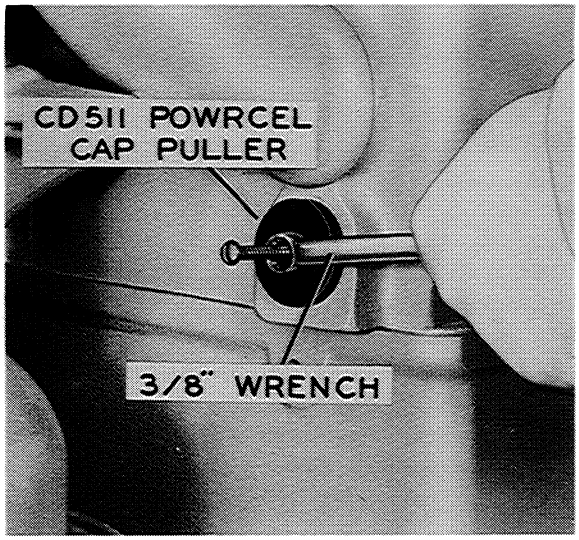

Figure I-44. Pulling Powrcel Cap

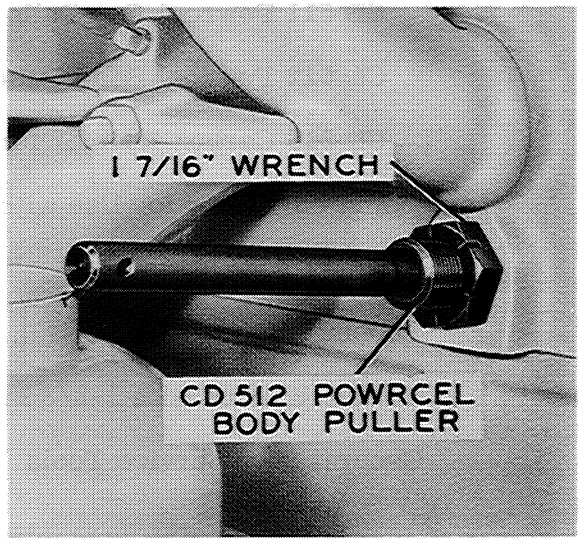

Figure I-45. Pulling Powrcel Body

Installing Powrcel

1. Before installing a Powrcel assembly that has been checked and cleaned thoroughly of carbon, or before installing a new Powrcel assembly, the recess in the cylinder head for the Powrcel must be cleaned of all carbon.

   a. Use the CD 516 Carbon Reamer provided in the CD 550 or CD 800 Tool Kit to clean the contacting surfaces of the cylinder head so the Powrcel will seal with the head after installation, Figure I-46.

   b. Decompress the engine and turn it over with the starting motor to blow any loose carbon out of the cylinder head recess.

   IMPORTANT Failure to remove all carbon from the exterior of the Powrcel and from the cylinder head recess may prevent a seal from being formed and will not permit the Powrcel Body to be positioned correctly. Leakage between the Powrcel and the cylinder head will cause poor combustion in that cylinder and will result in irreparable damage to the Powrcel and possibly to the cylinder head.

2. Insert the Powrcel Body in the Cylinder Head recess.

   CAUTION The groove in the Powrcel Body must be aligned with the Powrcel Body Locating Pin that protrudes into the cylinder head recess, as shown in Figure I-46. Use care not to damage or break off the locating pin when installing the body. Never attempt to force the body into the cylinder head recess. The body should slide into the recess easily if all carbon has been removed and if the groove in the body is aligned with the locating pin.

   IF A POWRCEL BODY LOCATING PIN IS DAMAGED OR BROKEN OFF, THE CYLINDER HEAD MUST BE REMOVED AND A NEW PIN INSTALLED. Refer to Page I-26.

   The correct positioning of the Powrcel Body in the cylinder head by means of the locating pin is vital to engine performance. An incorrectly positioned body will seriously affect the combustion process in that cylinder and will result in misfiring, exhaust smoke and power loss.

3. With the Powrcel Body correctly positioned in the cylinder head, install the Powrcel Cap and Clamp Screw, as shown in Figure I-47.

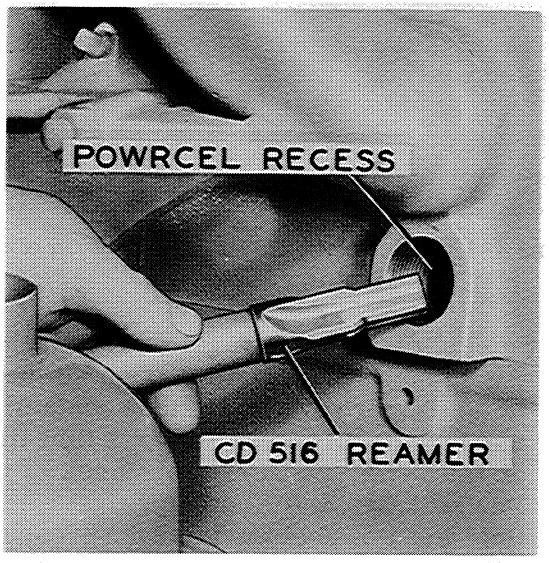

Figure I-46

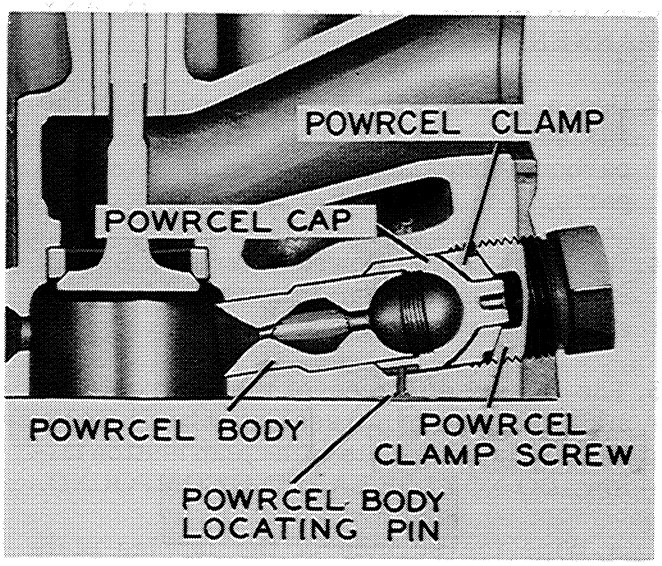

Figure I-47

4. Using a torque wrench and 1-1/8 inch socket, tighten the Powrcel Clamp Screw to 100 foot pounds, Figure I-48. The clamp screw must be tightened to 100 foot pounds to insure a tight seal between the Powrc el Body and the cylinder head, and between the Powrcel Cap and Body.

IMPORTANT Failure to remove all carbon from the exterior of the Powrcel and from the cylinder head recess may prevent a seal from being formed and will not permit the Powrcel Body to be positioned correctly. Leakage between the Powrcel and the cylinder head will cause poor combustion in that cylinder and will result in irreparable damage to the powrcel and possibly to the cylinder head.

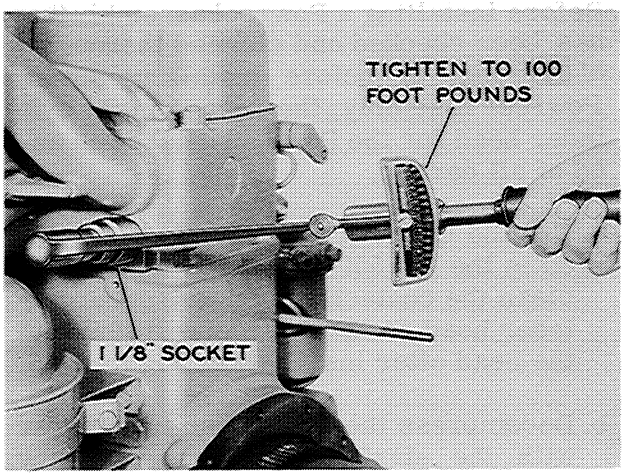

Figure I-48. Tighten Powrcel Clamp Screw with Torque Wrench

Cleaning Powrcel Assembly

1. Clean all carbon out of the funnel shaped end cavities of the Powrcel with a hard wood stick or a soft metal (brass) carbon scraper shaped to conform with the cavities.

2. Clean all carbon out of the front orifice of the Powrcel, Figure I-46, using a properly shaped piece of hard wood that is soaked in diesel fuel. DO NOT use a drill, reamer or any metal tool.

USE CARE WHILE CLEANING A POWERCEL NOT TO CHANGE OR DAMAGE THE CONTOURS OF THE POWRCEL IN ANY MANNER.

3. Use a Brass Wire Brush provided in the CD 500 or CD 800 Tool Kit to clean all carbon from the exterior of the Powrcel parts.

4. Wash all of the Powrcel parts in Bendix Speed Clene, carbon tetrachloride or a similar carbon solvent.

5. The lapped surfaces of the Powrcel Cap and Body that form a seal must be CLEANED on a lapping plate with clean mutton tallow. DO NOT USE LAPPING COMPOUND.

   a. Wipe the surface of the lapping plate with a clean soft cloth.

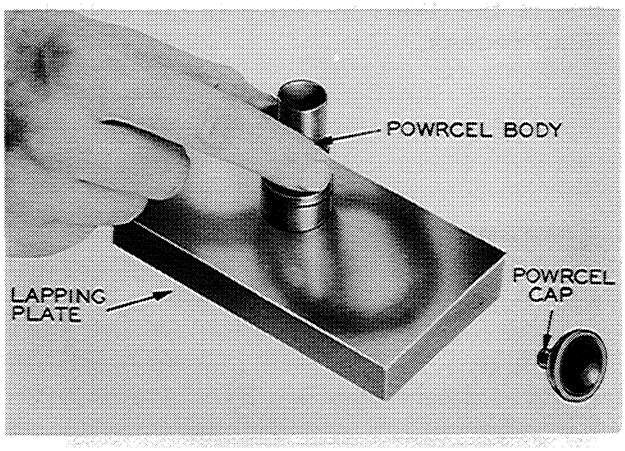

Figure I-49. Cleaning Powrcel Body on a Lapping Plate

   b. Smear clean mutton tallow evenly on the lapping plate. Use enough so there is no danger of a dry surface contacting the lapped surfaces. Smear a thin film of tallow on the lapped surfaces of the Powrcel Cap and Body.
   c. Hold the Powrcel part so even pressure will be exerted on the entire surface. Use just enough pressure to insure contact.

d. Moving the Powrcel part smoothly and steadily as if you were writing a "Figgure 8", clean the lapped surfaces of the cap and body as shown in Figures I-49 and I-50. The lapped surfaces should be cleaned until all carbon or discoloration is removed and a polished "mirror" surface is obtained.

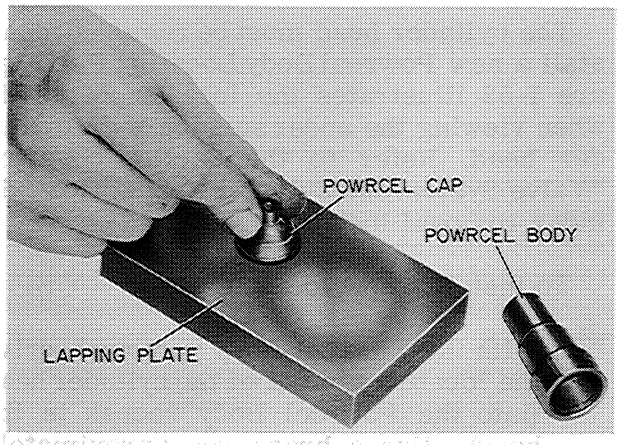

Figure I-50. Cleaning Powrcel Cap on Lapping Plate

Checking Powrcel Assembly

1. Check the lapped surfaces of the Powrcel Cap and Body for nicks, scratches, pitting or any indications of damage that would cause leakage. Look closely for signs of burning or scoring that would indicate the presence of a leak or "blow-by".

   If the lapped surfaces are damaged or if signs of leakage are found, replace the body or cap that is damaged.

2. Inspect the funnel shaped end cavities and the front orifice of the Powrcel Body for burned spots. If burned spots are found or if the contours of the body are changed in any way, install a new Powrcel Body.

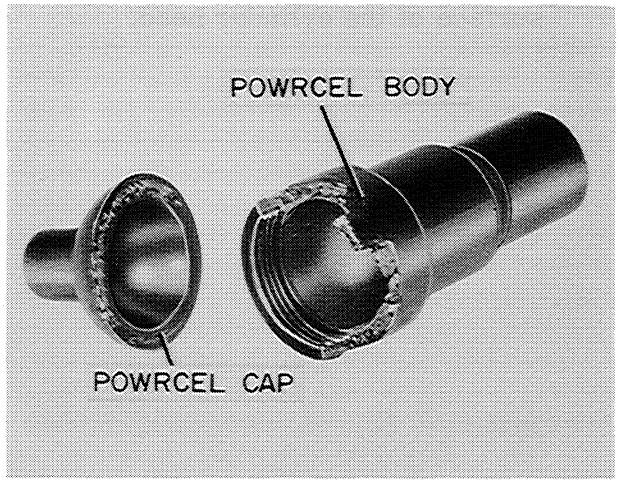

Figure I-51

IMPORTANT

The condition of the Powrcel Body and Cap illustrated in Figure I-51 can be caused by the following:

1. The Powrcel Body and Cap were not cleaned properly creating a leak or "blowby". A proper seal must be formed or scoring, pitting and burning of the Powrcel Body and Cap will develop, Figure I-51.

2. The Powrcel Clamp Screw was not tightened properly. Tighten the Powrcel Clamp Screw to 100 foot pounds. This will insure a proper seal between the Powrcel Body and Cap.

Installing Powrcel Body Locating Pin

The cylinder head must be removed to install a new Powrcel Body Locating Pin. Figure I-52 illustrates the location of the pin when viewing the under surface of the cylinder head. Refer to the Section covering "Valve System and Cylinder Heads." for cylinder removal instructions.

To install a new locating pin:

1. With the Powrcel Body removed, drive the locating pin out of the cylinder head (into the Powrcel Body recess in the head). Use a brass rod aproximately 3/32 inch in diameter. Be sure not to leave any pieces of the locatng pin in the cylinder head.

2. Tap a new locating pin into the hole until it is just flush with the surface of the head as shown in Figure I-52. The locating pin must not project above the surface of the cylinder head.

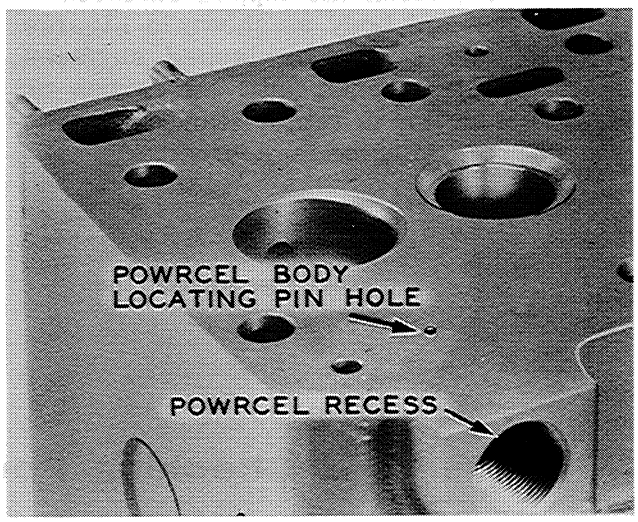

Figure I-52. Location in Cylinder Head of Powrcel Body Locating Pin Hole

ROBERT BOSCH MODEL PES MULTIPLE PLUNGER FUEL INJECTION PUMP
General Description

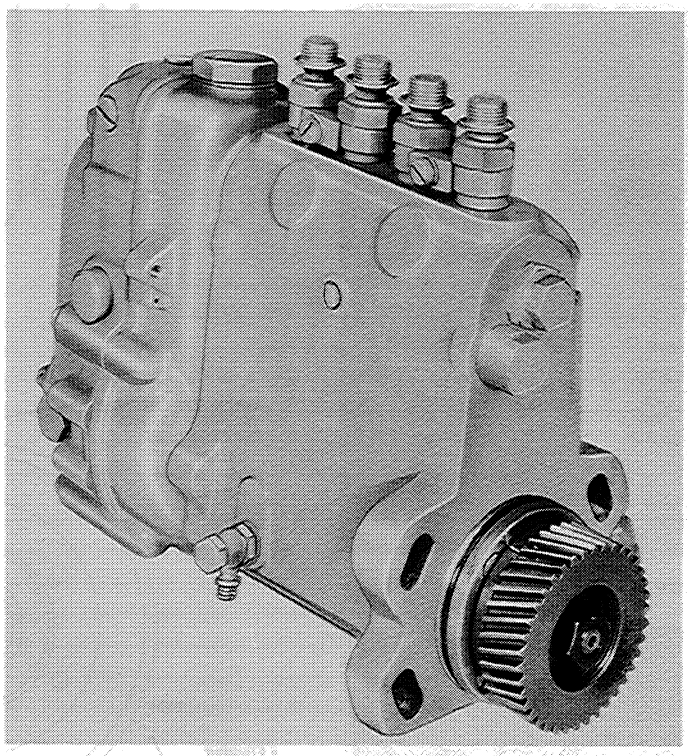

Figure I-53. Model PES Multiple Plunger (External Drive) Fuel Injection Pump

All Case Diesel Engines are equipped with a Robert Bosch Model PES Multiple Plunger (External Drive) Fuel Injection Pump. This is an extremely compact and precision unit into which is incorporated a high pressure injection pump a mechanical variable speed centrifugal type governor, a positive displacement plunger type fuel transfer pump, plus the required driving parts.

The function of the fuel injection pump is to deliver accurately metered quantities of fuel under high pressure to the injectors. This must be done with accurate timing in relation to the engine firing order and for a very definite period of time in relation to load and engine speed requirements.

To meet these rigid requirements, the Model PES Injection Pump is of necessity manufactured to unusually close tolerances. While the pump cannot be considered delicate, the precision with which it is constructed can be compared to that of a fine watch.

It is therefore doubly important that you take extra precautions against the entry of dust or similar abrasives when you perform any service work that involves the fuel injection pump or any other component of the fuel system.

Removing-Timing-Replacing Injection Pump

STEP 1 -- Disconnect fuel lines and throttle linkage, Figures I-54 and I-55.

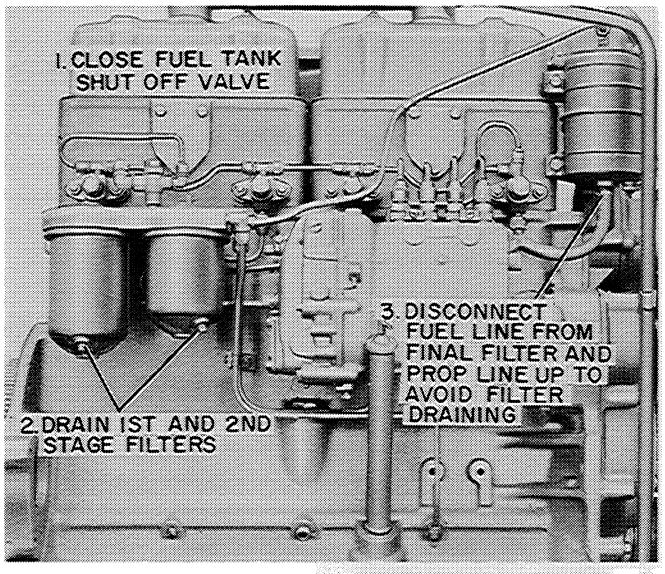

Figure I-54

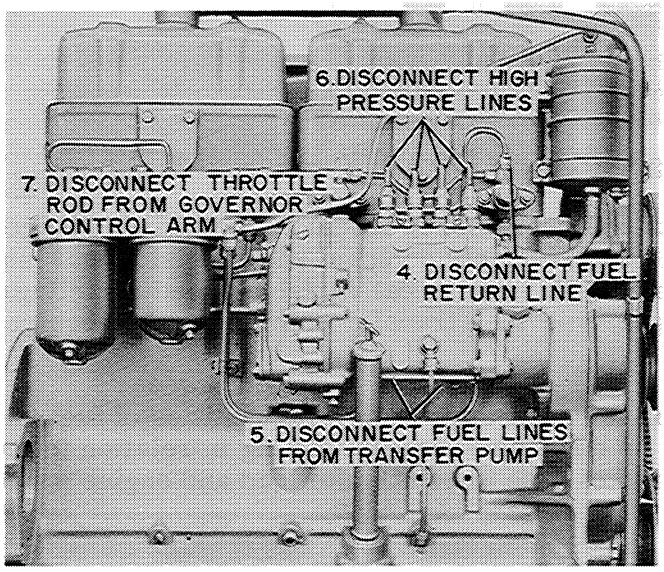

Figure I-55

STEP 2 -- Set the engine number 1 piston at the correct number of degrees before Top Dead Center on the compression stroke:

a. Crank the engine until the pointer on the timing gear cover or in the flywheel housing lines up with the specified degree on the crankshaft pulley or flywheel. Refer to "Specification" Section.

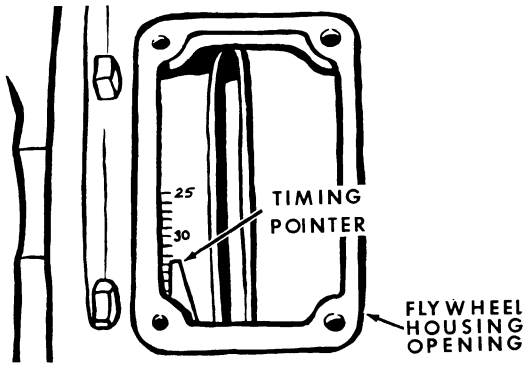

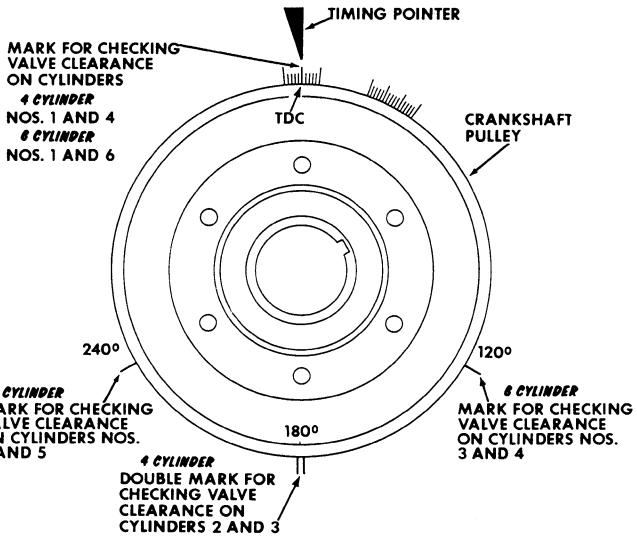

Figure I-56

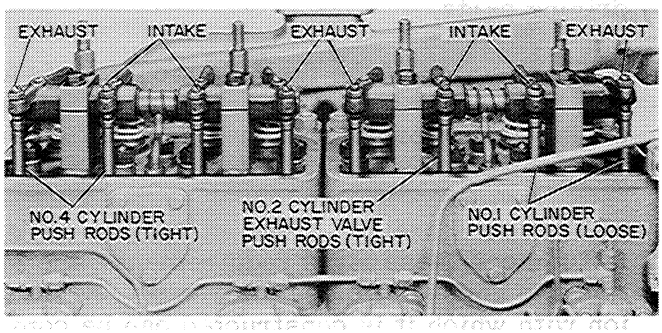

Figure I-57

b. Check the valve push rods, Figure I-57. When the number 1 piston is at the correct number of degrees before Top Dead Center, the push rods will be as indicated in Figure I-57. If the push rods are not as indicated in Figure I-57, crank the engine one complete revolution and recheck the push rods.

STEP 3 -- Remove the plug from the timing hole on the pump drive housing, Figure I-58. If the injection pump is properly timed to the engine, the mark on the injection pump gear will be aligned with the mark on the pump flange, Figure I-58.

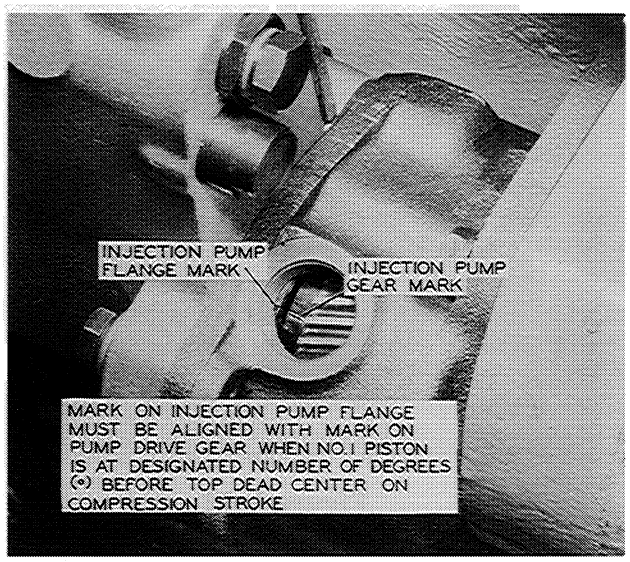

Figure I-58

STEP 4 -- The injection pump mounting capscrews can now be taken out and the fuel injection pump removed from the engine, Figure I-59.

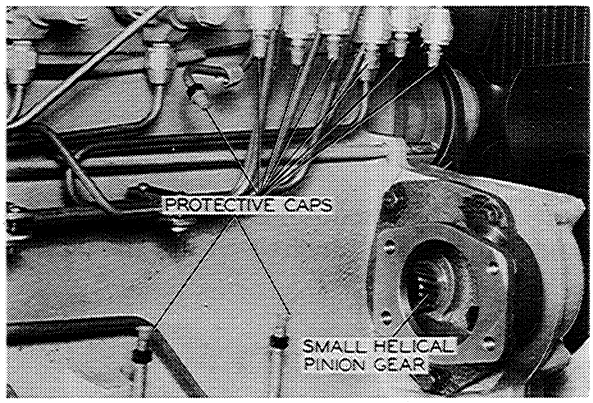

Figure I-59

CAUTION

Take care not to bend any of the fuel lines. Cap or plug all openings and lines immediately.

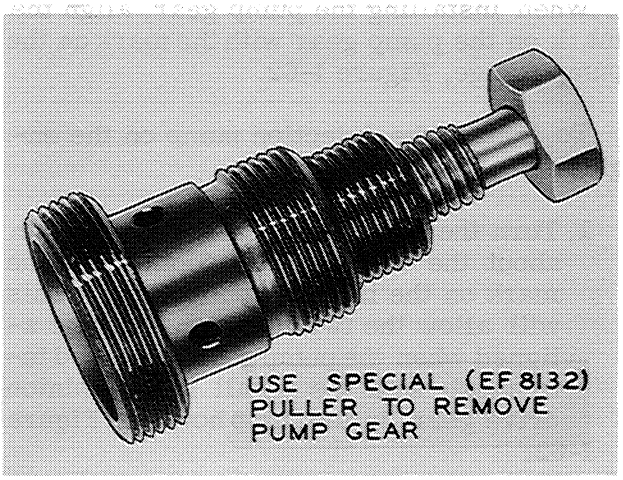

Figure I-60. EF 8132 Pump Gear Puller

In removing the pump gear, use the special (EF 8132) puller, Figure I-60.

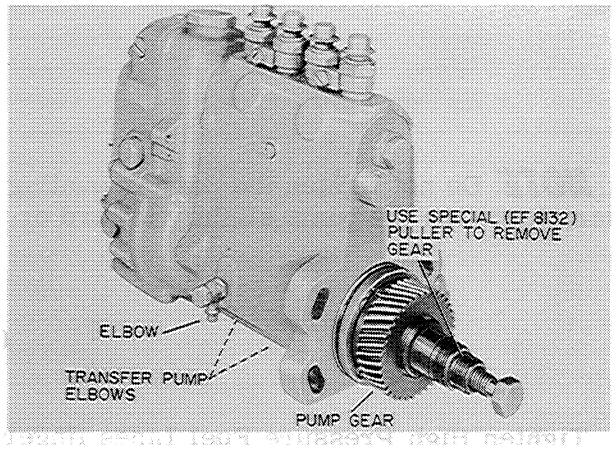

Figure I-61

If a replacement pump is being installed be sure to use pump gear, elbows and fittings from the pump that was removed, Figure I-61.

Installation and Timing

When installing the pump gear, align the mark on the pump gear with the mark on the pump flange, Figure I-62.

To install the injection pump on the engine:

1. Turn the pump gear counter-clockwise, about the width of one tooth from the mark on the injection pump flange. This will allow the two marks to become aligned when the pump gear is slipped into mesh with the small helical pinion drive gear, in the pump housing, Figure I-62.

2. Install the injection pump on the engine and reconnect all of the fuel lines and throttle linkage.

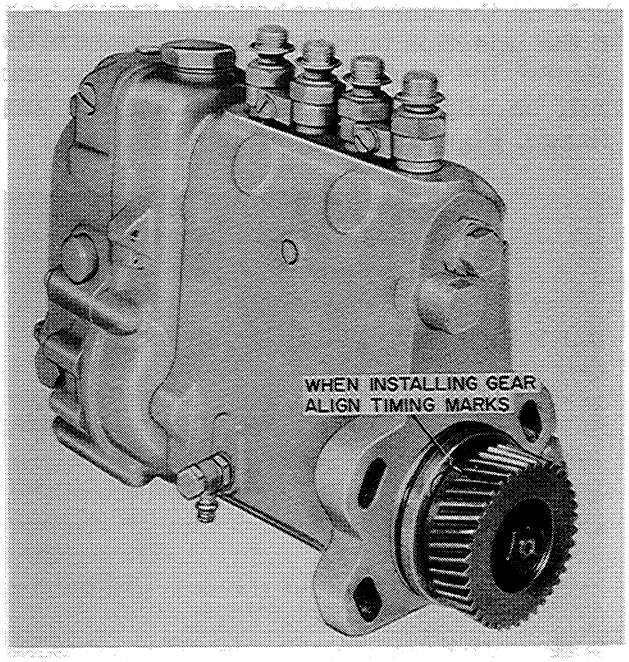

Figure I-62

NOTE. Do not tighten the pump mounting capscrews until the last step as it may be necessary to rotate the pump slightly toward or away from the engine to align the timing marks.

CAUTION

Tighten High Pressure Fuel Lines finger tight (snug) plus 1/8 of a turn.

Tighten Low Pressure Fuel Lines so the nuts seat against the shoulders of the fitting bodies Be sure the rubber grommets seat properly and are not binding or pinched on the fittings.

IMPORTANT

If the engine has been cranked after the pump was removed, repeat Steps 2 and 3 on Pages I-34 and I-35. The timing adjustments must be exact. As little as one degree off may affect engine performance.

Make sure pump mounting capscrews are tight.

After the pump is correctly timed to the engine, bleed the fuel system. Start the engine and carefully check for leaks.

Checking Engine Speed

The governed engine speed adjustment on the fuel injection pump is critical and can only be made with a tachometer that is known to be accurate. Revolution counters of any type or tachometers that have been in use for a long time without being checked for accuracy must not be used.

USE THE CD 502 TACHOMETER.

NOTE It is advisable to take your tachometer to your local tool supplier at least once a year and check it against a high quality new tachometer.

Checking Procedure

1. Take the tachometer reading from the end of the crankshaft by inserting the CD 503 tachometer extension through the hand crank opening in the lower radiator bracket and hold the conical rubber tip against the center of the crankshaft pulley screw.

   a. Press the tachometer button slowly, but firmly and release quickly, Figure I-63. This will wind the spring, restore the hands to zero and start the tachometer.
   b. Leave the tachometer in position until the hands cease to rotate, then remove and read. The hands will remain at this reading until reset.

2. It is not necessary to reset the hands to zero until the conical rubber tip is against the shaft for the next test.

3. Tests must be made at intervals shorter than 15 seconds. Read the instruction card provided in the tachometer case.

4. To eliminate the possiblilty of error, take the engine speed reading with the tachometer at least three times.

IMPORTANT The engine, the transmission oil and the hydraulic fluid must be warmed up before the engine speed is checked. Allow the engine to run until the temperature gauge reads normal operating temperature. If the engine is equipped with radiator shutters, close them sufficiently to raise the temperature as close to 180 degrees Fahrenheit as possible. Check the coolant temperature with the CD 515 Thermometer provided in the CD 500 or CD 800 Tool Kit.

MAKE SURE THE GEAR SHIFT LEVER IS IN NEUTRAL.

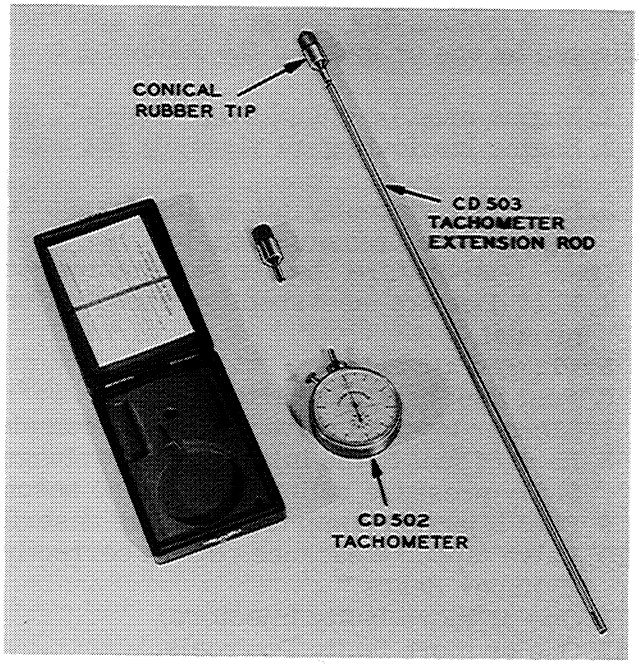

Figure I-63. CD 502 Tachometer Equipment

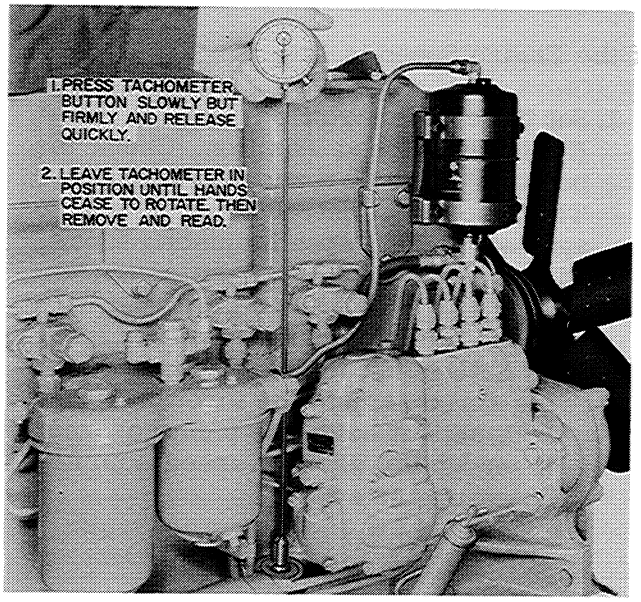

Figure I-64. Taking a Tachometer Reading

Engine Speed Adjustment

NOTE

The Authorized Engine Speed Adjustments described in the following paragraphs of this manual are for the information and use of Authorized Case Dealers only.

Unauthorized changes in the governed engine speed of the Case Diesel Engine will automatically serve void and waive any Warranty whatsoever by the J. I. Case Company.

Before making any changes in the governed engine speed, check that the engine speed is not affected by one or more of the following conditions:

1. Engine must be completely "Run-In", (at least 50 hours).
2. Engine lubricating oil viscosity not according to recommendations in the Operator's Manual.
3. Incorrect viscosity oil in the transmission, torque converter or hydraulic system.
   NOTE The transmission, torque converter and hydraulic oil must be warmed up to proper temperature before attempting to take an accurate engine speed reading.
4. Fuel does not meet specifications for Number 2 Diesel Fuel as described in the Operator's manual.
5. Plugged air cleaner.
6. Fuel tank breather partly plugged.
7. Bleeder by-pass valve not closed completely.
8. Lack of fuel to the injectors due to plugged fuel filters, air or water in the fuel system, or faulty pressure relief valve on the second stage filter.
9. Fuel injection pump not timed as described in this section.
10. Valve tapped clearance not set correctly. Refer to the Section covering "Valve System and Cylinder Heads."
11. One or more faulty injectors.
12. One or more faulty Powrcels.
13. Loss of compression in one or more cylinders.

If the Engine Speed is Low:

1. Set the engine throttle in the No Load (High Idle) Speed Position. Check the position of the Governor Control Lever. The Governor Control Lever should be against the high speed adjusting screw, Figure I-65.

   a. If the injection pump governor lever is not against the high speed adjusting screw, adjust the throttle linkage rod, until it holds the pump governor lever against the high speed stop. Recheck engine speed.

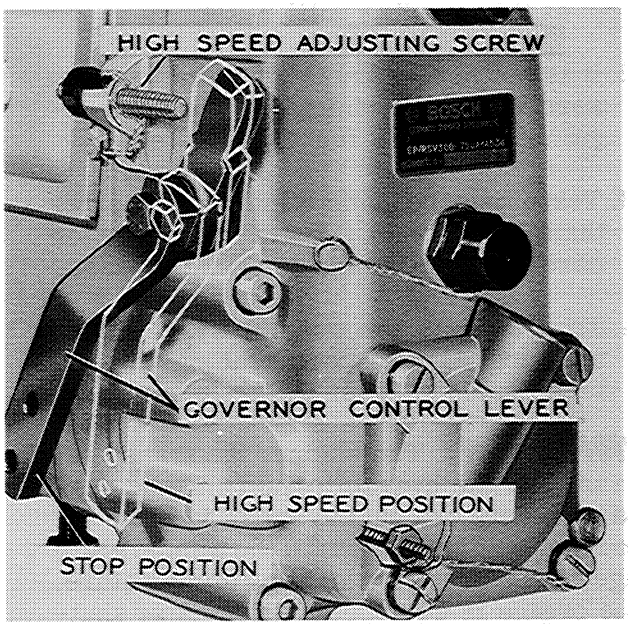

Figure I-65

b. If you find the injection pump governor lever is against the high speed adjusting screw, but the engine speed is still low, the engine speed can be increased a limited amount by means of the high speed adjusting screw.

IMPORTANT The high speed adjusting screw is sealed with a wire and lead seal. If you have the necessary equipment, reseal the adjusting screw when the governor adjustment is complete. Always make a record of the date you broke the seal, the serial number of the machine or engine and the reason why you broke the seal. Also record whether or not you resealed the stop, and if so, describe the seal.

TO INCREASE the engine speed by means of the high speed adjusting screw, loosen the lock nut and turn the adjusting screw out toward the front of the pump (counter-clockwise) 1/2 turn at a time, Figure I-66. Check engine speed after each 1/2 turn.

CAUTION: Before changing or adjusting the full speed adjusting screw on the pump, make sure the engine is operating with the correct injection pump. The pump can be identified by the number stamped on the governor housing.

EXAMPLE

Engines that are factory equipped to operate at 2000 RPM Full Governed Engine Speed are stamped EP/RSV 300 -- 1000.

If the engine does not have the correct injection pump, install the correct pump before making any adjustments.

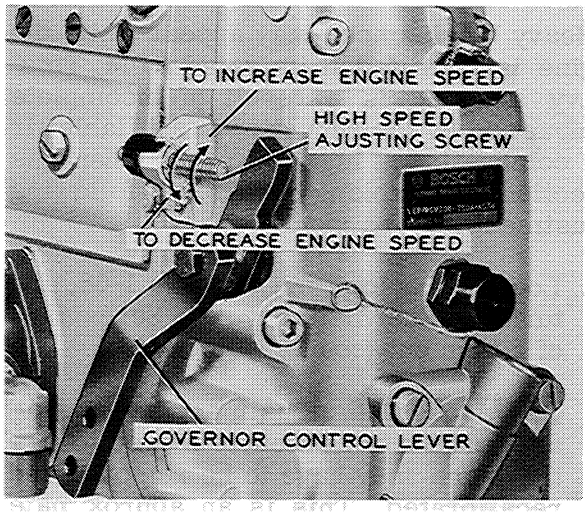

Figure I-66

If the Engine Speed is too High:

1. Set the engine throttle in the No. Load (High Idle) Speed position. Loosen the lock nut on the high speed stop and turn the screw in (clockwise) until the correct engine speed is obtained, Figure I-67.

IMPORTANT The high speed adjusting screw is sealed with a wire and lead seal. If you have the necessary equipment, reseal the adjusting screw when the governor adjustment is complete. Always make a record of the date you broke the seal, the serial number of the machine or engine and the reason why you broke the seal. Also record whether or not you resealed the stop and if so, describe the seal.

IMPORTANT Before changing or adjusting the full speed adjusting screw, refer to the Caution.

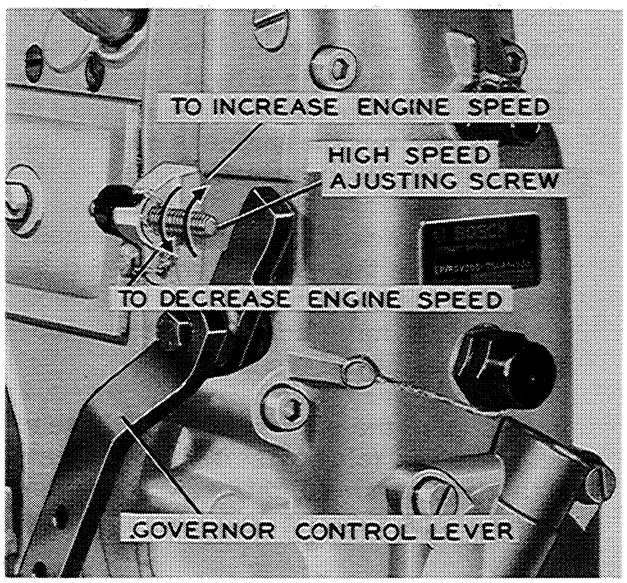

Figure I-67

Altitude Adjustment

NOTE

The Full Load Delivery Stop Screw located inside the injection pump governor housing, Figure I-68, is designed to aid the governor in controlling the amount of fuel the injection pump delivers. The stop screw is set at the factory during the calibration of the injection pump. This calibration will deliver the correct amount of fuel to engine under normal operating conditions.

There are conditions (such as high altitude) where it may be necessary to change the Stop Screw.

ENGINES OPERATING AT 3000 FEET OR MORE ABOVE SEA LEVEL

Heavy black smoke may appear while the engine is operated at its rated RPM. This heavy smoking is a result of incomplete combustion by the reduction in available air for combustion at high altitudes. When this objectionable smoking occurs, the following adjustment may be made:

1. Loosen the lock nut, Figure I-68, and turn the Fuel Delivery Stop Screw 1/64 of a turn out (counter-clockwise).

   CAUTION This adjustment is very sensitive if the set screw is moved too far the pump may have to be removed and recalibrated. This is an approximate measurement. If black smoke continues to come from the exhaust while the engine is under load -- turn the stop screw out (counter-clockwise) 1/64 of a turn at a time until there is a light brown haze coming from the exhaust under load at rated speed and the engine is warmed up to operating temperature.

   If there is lack of power and no smoke coming from the exhaust under load, after the temporary setting has been made, it is an indication that the stop screw was moved too far.

   In this case the stop screw will have to be moved in (clockwise) 1/64 of a turn at a time until a light brown haze appears in the exhaust under load at rated speed.



Figure I-68

IMPORTANT

At no time should the injection pump cover be removed and the stop screw moved until the engine is tried under load. If the machine is not equipped with a torque converter, the load should be such that it will not pull the engine down under rated speed. If the load pulls the engine down below rated speed there will be some smoke coming from the exhaust. This is a normal condition and should not be confused with the light haze of smoke that comes from the exhaust when the engine is working at rated speed.

The cover over the Stop Screw is sealed and should not be tampered with unless it is necessary to correct for high altitude. The Stop Screw should not be moved in (clockwise) from the calibration established at the factory. This will increase the fuel delivery to the engine but there is no advantage to be gained. The effects of injecting more fuel are:

1. Objectionable exhaust smoke

2. Poor fuel economy

3. Greater soot contamination of lubricating oils.

FOR THE BEST PERFORMANCE OF CASE DIESEL ENGINES, THE EXHAUST SHOULD BE PRACTICALLY AS CLEAN AS A GASOLINE ENGINE EXHAUST UNDER NORMAL OPERATING CONDITIONS.

The Full Load Fuel Delivery Stop Screw adjustment should be carefully made to give as clear an exhaust as possible without loss of power.

Before making any adjustment for smoke control, always check the obvious things first such as:

1. Failure to maintain the correct engine operating temperature will cause smoke.

2. Correct fuel within the specifications of the Operator's Manual -- Number 2 Diesel Fuel is recommended for the best performance of CASE DIESEL ENGINES.

3. Incorrect Pump to Engine Timing will cause smoke. Refer to Pages I-34 and I-35 in this section for correct timing instructions.

4. Incorrect valve tappet clearance will also cause smoke. Refer to Operator's Manual for correct valve tappet clearance.

Supplementary Idle Screw Adjustment

If a "hunting" governor condition should be encountered (engine low idle speed suddenly drops to a very low RPM and then surges or speeds up); the "hunting" condition can be overcome by setting the Supplementary Idle Adjusting Screw in the injection governor housing.

The Suplementary Idle Adjusting Screw is located under a cap nut, Figure I-69, which is sealed with wire and lead seal. If you have the necessary equipment, reseal the cap nut when the Supplementary Idle Screw Adjustment is complete. Always make a record of the date you broke the seal, the serial number of the machine or engine and the reason why your broke the seal. Also record whether or not you resealed the cap nut and if so describe the seal.

Adjustment

1. Remove the cap nut, Figure I-69, then loosen the lock nut.

2. Turn the Supplementary Idle Adjusting Screw, clockwise approximately 1/8 of a turn. This is just an approximate measurement to use as a starting point. If the governor continues to "hunt" move the Adjusting Screw a very little at a time until the engine will idle smoothly then tighten the lock nut and reinstall the cap nut.

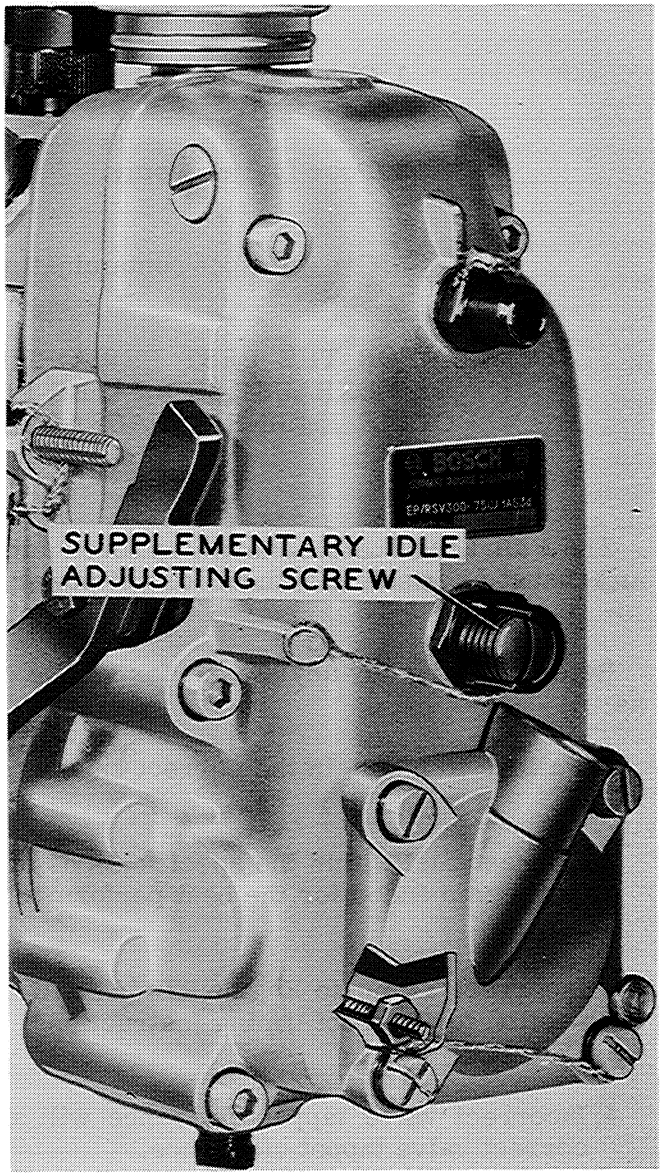

Figure I-69

IMPORTANT

Do not turn the Supplementary Idle Adjusting screw too far clockwise as it will increase the low idle speed. Just turn it far enough to overcome the "hunting" condition.

Turning the Supplementary Idle Adjusting Screw counter-clockwise will only aggravate the "hunting" condition.

IMPORTANT

Re-check the engine idle speed with an accurate tachometer.

Control Rack on Injection Pump

In some instances when an engine is hard to start and there is no exhaust smoke, it may be due to the Control Rack sticking in the stop position. The stop position on Robert Bosch Governors is always with the Control Rack toward the rear of the pump or governor.

The sticking of the Control Rack can be due to gum and varnish in the fuel. Instruct the customer to use a small quantity of "Case Diesel Fuel Conditioner" in the fuel tank daily as this will clean out the gum and varnish deposits already in the engine and will prevent these deposits from forming. Refer the customer to the Case Diesel Fuel Conditioners" in the "Fuel Specifications Section" of the Operator's Manual.

To free the control rack proceed as follows:

1. Loosen and remove the cap nut on the front of the injection pump, Figure I-70.

2. Place the throttle in the wide open position so the control rack will be toward the full load position.

3. Work the control rack from the cap nut end (by hand) a few times to relieve the sticking due to the gum and varnish.

4. Make sure the control rack works easily and smoothly before replacing and tightening the cap nut.

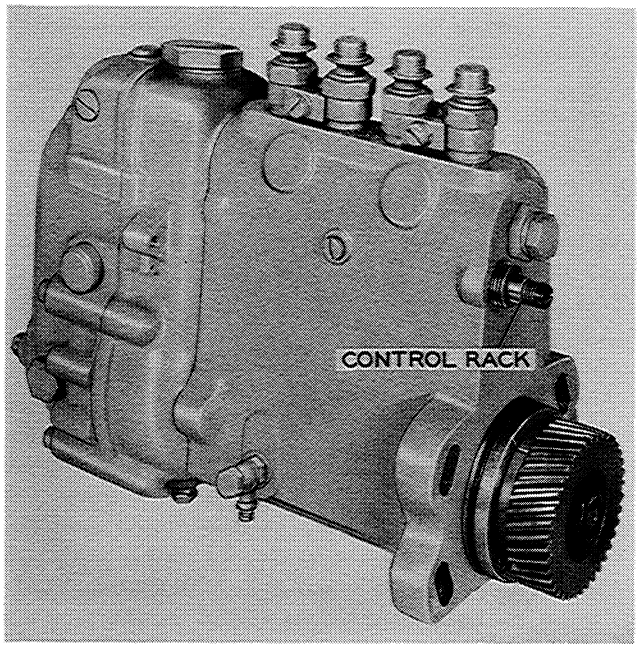

Figure I-70

NOTE: The CASE CORPORATION **reserves the right to make improvements in design or changes in specifications at any time without incurring any obligation to install them on units previously sold.**

SECTION

N

SERVICING THE

TSX SERIES

GASOLINE CARBURETOR

PRINTED IN U.S.A.

TABLE OF CONTENTS

I. GASOLINE CARBURETOR---------- N-3 thru N-12

Model Identification ---------- N-3

Specifications ---------- N-4

Principals of Operation ---------- N-6 thru N-10

Float System ---------- N-7

Idle System ---------- N-8

Power Fuel Feed System ---------- N-9

Choke System ---------- N-10

II. SERVICING THE CARBURETOR ----------N-13 thru N-30

Disassembly of the Model TSX Carburetor ---------- N-13

Measuring the Carburetor Nozzles and Seats ---------- N-19

Assembly of the Model TSX Carburetor ---------- N- 21

CARBURETOR MODEL IDENTIFICATION

The Models TSX 616, 782, 785 and 863 Carburetors have been used on Case Powrdyne Gasoline Engines.

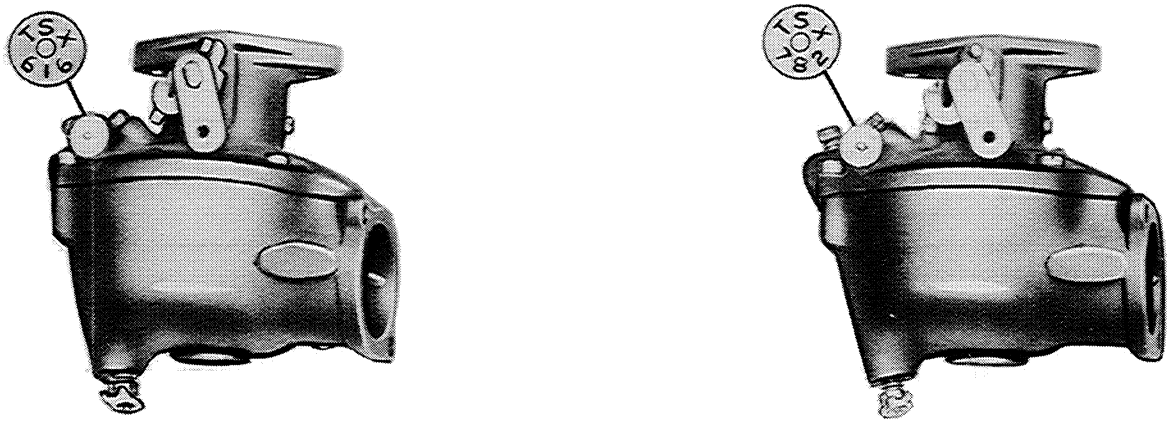

Figure N-1

The Carburetor model can be identified by the identification tag rivited to the float bowl cover. Refer to Figure N-1.

CARBURETOR SPECIFICATIONS

Before reassembly, it is very important that the proper carburetor parts be re-installed for the most efficient engine operation, Figures N-26 thru N-33 illustrate how these parts can be inspected and checked for size.

TSX 616 Carburetor

Venturi size (at narrowest point) ---------- 29/32"

Main nozzle ---------- .147" or #26 drill

Idle Feed Hole ---------- .0635" or #52 drill

Lower Air Vent Hole ---------- .0400" or #60 drill

Upper Air Vent Holes ---------- .0350" or #65 drill

Main adjusting needle seat ---------- .055" or#54 drill

Float valve seat ---------- .081" or #46 drill

TSX 782 Carburetor

Venturi size (at narrowest point) ---------- 1-1/16"

Main nozzle ---------- .147" or #26 drill

Idle Feed Hole ---------- .0635" or #52 drill

Lower Air Vent Hole ---------- .0400" or #60 drill

Upper Air Vent Holes ---------- .0350" or #65 drill

Main Adjusting needle seat ---------- .067" or #51 drill

Float valve seat ---------- .081" or #46 drill

TSX 785 and TSX 863 Carburetors

Venturi size (at narrowest point) ---------- 1-1/16"

Main nozzle ---------- .147" or #26 drill

Idle Feed Hole ---------- .0635" or #52 drill

Lower Air Vent Hole ---------- .0400" or #60 drill

Upper Air Vent Holes ---------- .0350" or #65 drill

Main adjusting needle seat ---------- .073" or #49 drill

Float valve seat ---------- .100" or #39 drill

Refer to Pages N-19 and N-20 for measuring procedure

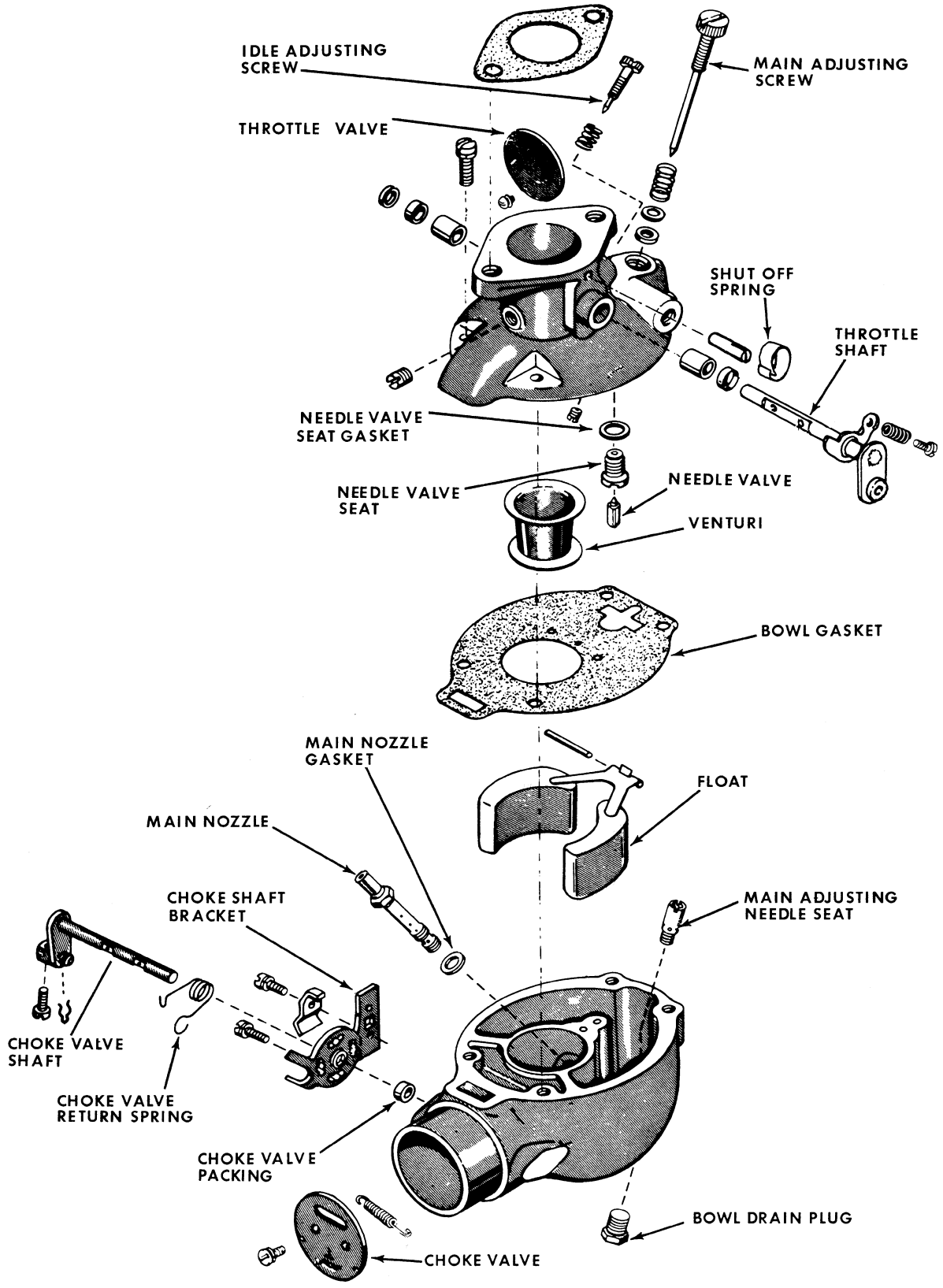
IDLE ADJUSTING SCREW
MAIN ADJUSTING SCREW
THROTTLE VALVE
SHUT OFF SPRING
THROTTLE SHAFT
NEEDLE VALVE SEAT GASKET
NEEDLE VALVE SEAT
NEEDLE VALVE
VENTURI
BOWL GASKET
MAIN NOZZLE GASKET
FLOAT
MAIN NOZZLE
CHOKE SHAFT BRACKET
MAIN ADJUSTING NEEDLE SEAT
CHOKE VALVE SHAFT
CHOKE VALVE RETURN SPRING
CHOKE VALVE PACKING
BOWL DRAIN PLUG
CHOKE VALVE

Figure N-2

GASOLINE CARBURETOR

Principles of Operation

The Marvel-Schebler Carburetor used on Case Gasoline engines has been designed to provide many years of trouble free service. However, as in the case of all mechanical devices, it will in time require proper service. An understanding of its construction and how it operates, as well as an understanding of its function with respect to the engine, will not only avoid many false leads on the part of the service man in diagnosing so-called carburetor complaints, but will create customer satisfaction and a profitable business for the progressive service shop.

To understand a carburetor, it is necessary to realize that there is only one thing that a carburetor is designed to do, and that is to mix fuel and air in the proper proportion so the mixture will burn efficiently in an engine. It is the function of the engine to convert this mixture into power.

There are three major factors in an engine which control the change of fuel and air into power:

1. Compression
2. Ignition
3. Carburetion

Carburetion has been listed last because it is absolutely necessary for the engine to have good compression and good ignition before it can have good carburetion.

When the average person thinks of "carburetion" he immediately thinks of the carburetor as a unit. Carburetion is the function of the carburetor, manifold, valves, piston and rings, combustion chamber, and cam shaft.

It can readily be seen that "carburetion" is a far deeper subject than consideration of the carburetor alone, and expecting the carburetor to cure faulty ignition, compression, valves, etc. will only result in wasted time and effort on the part of the service man and added expense to the customer.

It must be remembered that the function of the carburetor does not extend beyond delivering the proper mixture of fuel and air to the manifold. The other factors which affect power and economy cannot be changed or corrected by the carburetor. Inability to understand all the factors that affect engine operation is the reason many service mechanics change from factory standards in and attempt to improve on the engine set-up by their own methods or "standards." All that any service mechanic should ever try to do is to make the particular engine he is working on as good as the manufacturer intended it to be, but he can make it a lot worse. Far too many engines are running below their standard of performance in service today because of improper servicing.

For the carburetor to accomplish its function, it must be able to vary the mixture strength dependent upon the engine demands. It must supply a mixture strength that will allow the engine to give maximum horsepower whenever the throttle is fully opened; while at part throttle conditions it must lean out the mixture so maximum economy can be obtained. In addition, it must have flexibility throughout the entire range of operating speeds, from idle and part throttle to full power and wide open throttle position. The carburetor must also have an accelerating "well" with enough fuel capacity to start handling sudden maximum loads. The carburetor not only varies the volume of fuel and air that enters the engine, but also varies the amount of fuel that goes in with a given amount of air, in order to produce the proper mixture proportion for any condition under which the engine is operating at any time.

In order to understand the function and operation of the Marvel-Schebler Carburetor, it is well to consider the systems that make up each carburetor. These systems are The Float System, The Idle System, The Power Fuel Feed System and the Choke System. The following pages explain how each of these systems work.

A thorough knowledge of each system will help the service mechanic to quickly locate and correct legitimate carburetor complaints, as well as to inspect, repair, and put back to standard any carburetor that requires an overhaul.

THE FLOAT SYSTEM

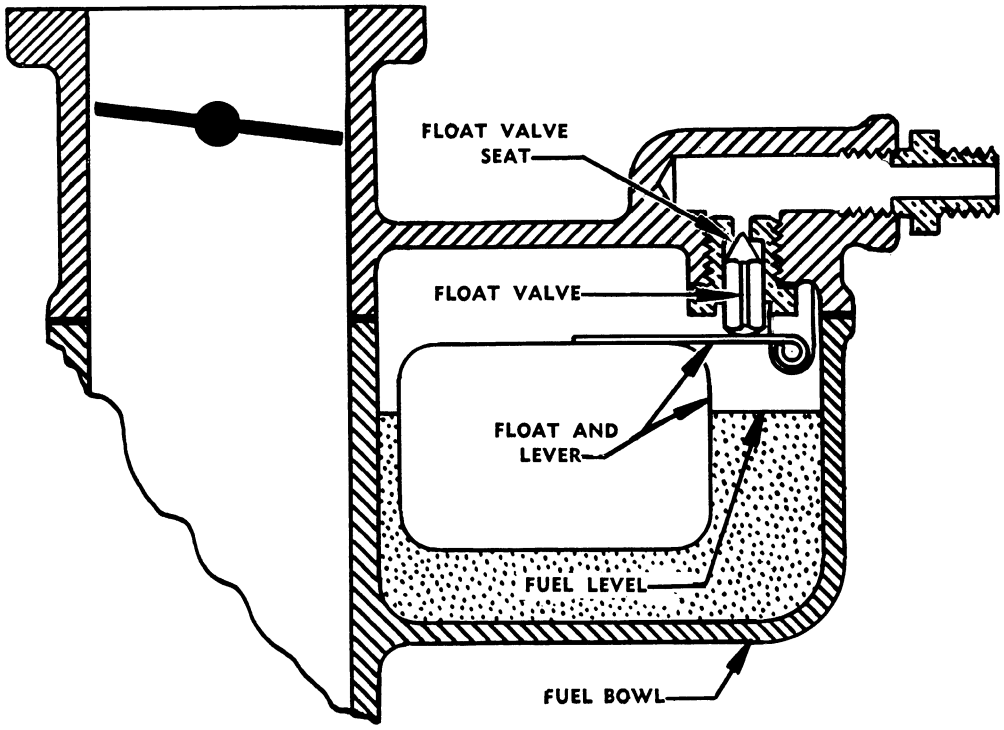

Figure N-3

The Float System controls the level and supply of gasoline in the fuel bowl throughout the operating range of the engine.

When the fuel bowl is empty, the float valve drops and fuel by gravity feed is forced through the float valve seat around the float valve and into the fuel bowl. As the fuel in the bowl approaches the correct operating level it raises the float and lever with enough force to raise the float valve and cut off the flow of fuel into the bowl. As fuel feeds through the carburetor jets into the engine, the fuel level drops, allowing the float to drop so the valve drops out of the seat permitting additional fuel to enter the fuel bowl.

Under actual operating conditions the fuel level and float and lever automatically position themselves so that the inward flow of gasoline to the carburetor is equal to the outward flow of gasoline to the engine.

The float system under the most favorable operating conditions is subjected to a certain amount of wear. Under severe conditions or conditions that result in excessive vibrations being transmitted to the carburetor, float valve and float valve seat wear is accelerated.

THE IDLE SYSTEM

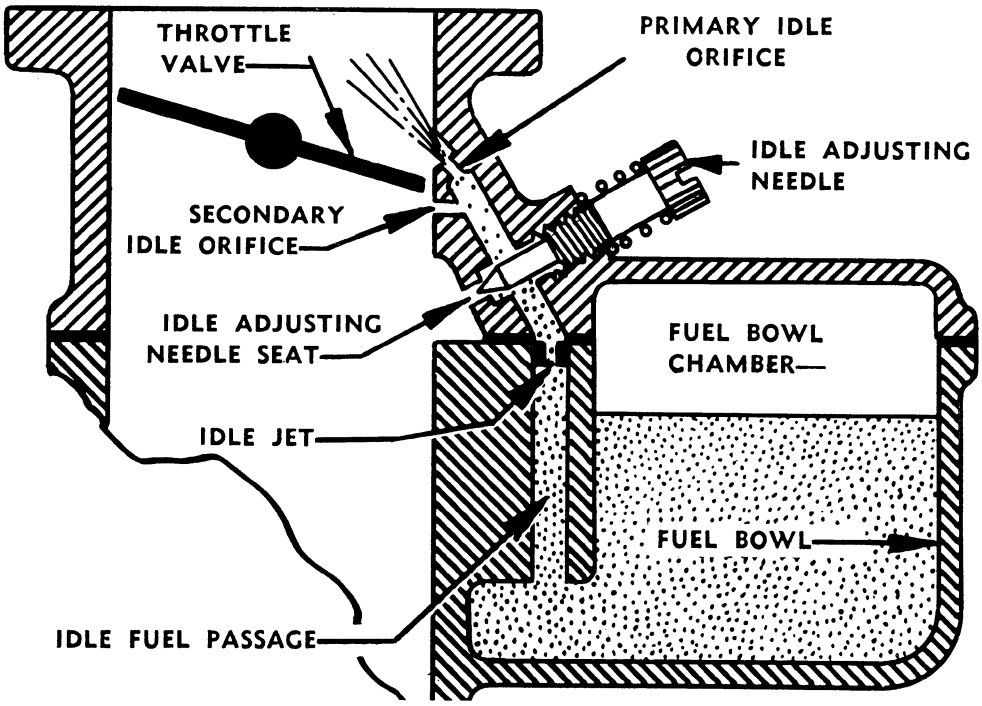

Figure N-4

The Idle System controls the flow of fuel at idle speed and at slow speeds until the throttle is opened wide enough to allow the power fuel feed system to function.

When the throttle valve is in the idle position the edge of the valve is between the primary idle orifice and the secondary idle orifice. With the valve in this position, the air pressure (manifold vacuum) at the primary idle orifice is lower than the air pressure in the fuel bowl chamber and fuel is forced from the fuel bowl into the idle fuel passage.

As the fuel travels through the idle fuel passage it passes through the metering orifice of the idle jet to the point where it is combined with air entering through the idle adjusting needle seat.

The mixing of air with gasoline helps to atomize the fuel and this process is repeated at the secondary idle orifice as the fuel travels through the idle fuel passage.

As this rich mixture of fuel and air emerges from the primary idle orifice it is reduced to correct proportions by the air which passes around the throttle valve since this valve must be slightly open to permit the engine to idle. The resultant mixture is correct for operating the engine at idle speed, provided the idle adjusting needle is properly adjusted.

As the throttle valve is slowly opened from the slow idle position it gradually subjects the secondary idle orifice to the intake manifold vacuum, and the secondary idle orifice no longer bleeds air to the idle fuel passage, but feeds an additional quantity of fuel into the engine. This is proper since the throttle valve is now open wider and will admit a greater amount of air to blend with this additonal fuel to maintain the correct proporportions of fuel and air for the engine.

As the throttle valve is opened still wider, the idle fuel delivery begins to fade out. However, the throttle valve at this point is far enough open for the power fuel feed system to begin functioning.

The idle system as described above is the most positive and satisfactory of idle system, as it is working under very high suction and the mixture flows through the small passages and orifices at very high velocities.

THE POWER FUEL FEED SYSTEM

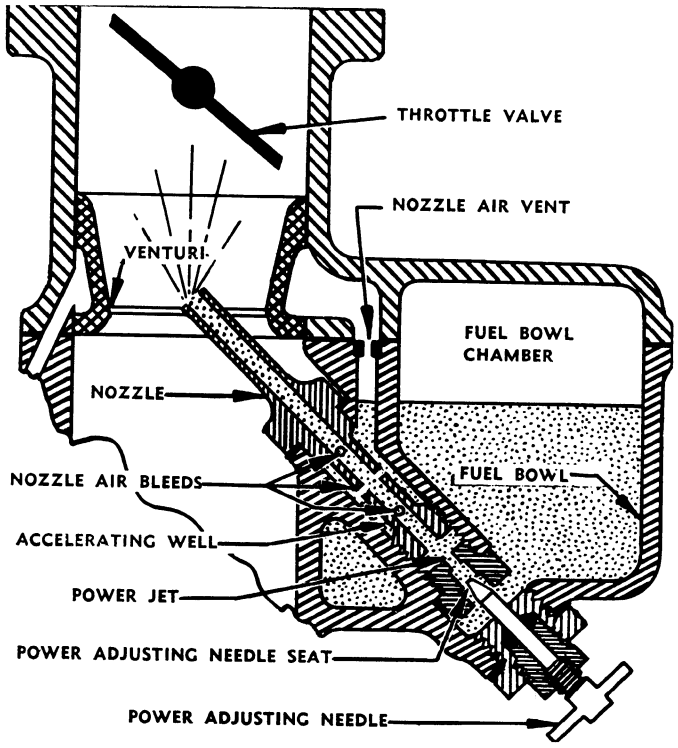

Figure N-5

With the throttle valve in slow or just off, slow idle position, fuel rises up through the nozzle and out of the nozzle air bleeds to fill the accelerating well to approximately the height of the fuel level in the fuel bowl.

As the engine speed is increased from the slow idle position the air flow through the venturi is gradually increased, and as the idle system begins to diminish, the velocity through the venturi is high enough to create a pressure at the tip of the nozzle slightly less than the pressure in the fuel bowl chamber and the accelerating well.

Fuel, therefore, feeds from the fuel bowl through the opening between the power (load) adjusting needle and the power adjusting needle seat through the power jet and out the nozzle to be discharged into the air stream at the venturi.

At the same time, the fuel that is stored in the accelerating well is also forced through the nozzle air bleeds into the nozzle. But because the size of the power jet and the position of the power adjusting needle restrict the amount of fuel which can enter the nozzle, the fuel in the accelerating well will soon be exhausted and air will then enter through the nozzle air bleeds to mix with the fuel passing through the nozzle. The amount of air that can enter into the nozzle is limited by the size of the nozzle air vent.

The result of air bleeding into the nozzle is: to help atomize or break up the fuel into finer particles; to regulate the quantity and the rate of discharge of the fuel fed from the accelerating well during acceleration; and to provide the correct mixture proportions for full throttle operation.

As the throttle valve is opened toward the wide open position the velocity through the ventrui continues to increase, lowering air pressure at the nozzle and resulting in additional fuel being supplied to the engine as the speed is increased.

When the throttle valve is opened suddenly from slow or just off slow idle position, the fuel stored in the accelerating well is forced out through the nozzle air bleeds very rapidly and serves to provide the extra richness required by the engine to meet the sudden load. When the throttle valve is closed, fuel again fills the accelerating well ready for the next acceleration.

THE CHOKE SYSTEM

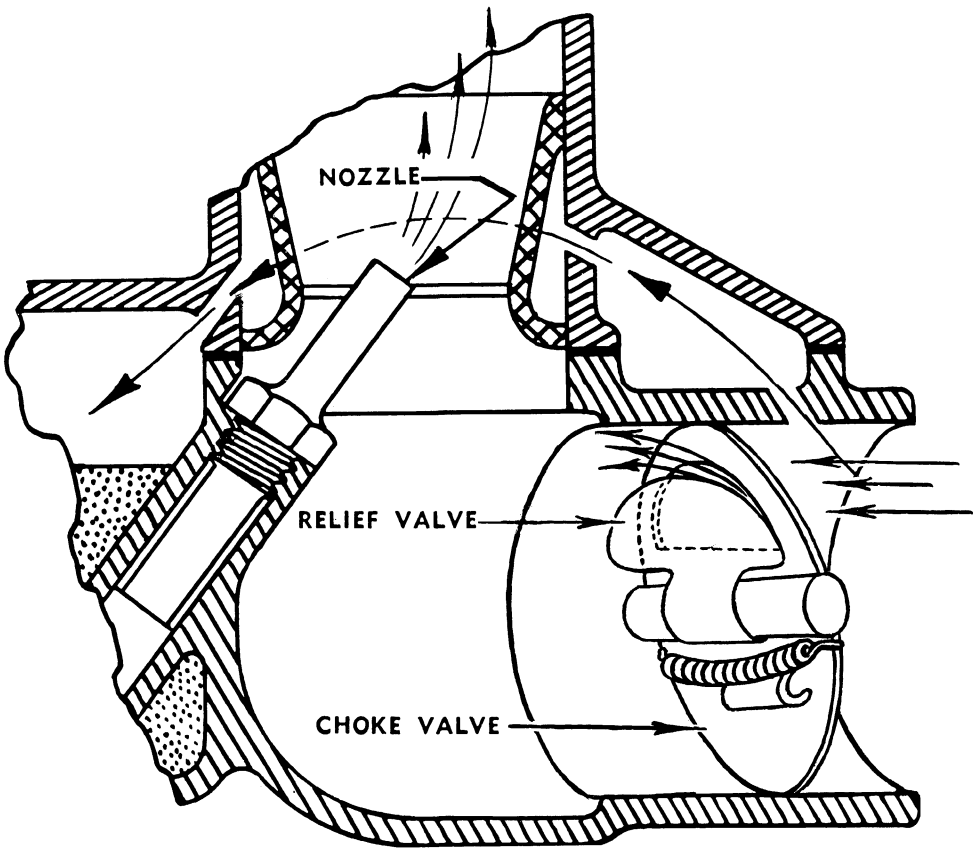

Figure N-6

The choke System is used during cold starting and the warm-up period. Under cold temperatures it is necessary to supply an additionally rich mixture of fuel and air, as only the "light ends" or more volatile portions of the fuel will vaporize with the manifold and air temperatures at a low reading. Consequently, it is necessary that a large quantity of fuel be available so there will be enough "light ends" to combine with the air to form a combustible mixture for starting the engine.

The function of the choke valve is to restrict the amount of air that can enter the carburetor and to increase the suction on the nozzle so the additional fuel will be drawn into the manifold. As soon as the engine fires and runs, the rich mixture must be rapidly reduced to prevent stalling. This change in mixture is accomplished by the operator positioning the choke valve to provide the proper mixture. However, a few degrees movement of the choke valve will make a big change in the mixture strength. To help reduce the sensitivity of the choke valve position, a spring loaded relief valve is used. This relief valve opens automatically with engine speed and load and eliminates a great deal of manipulation of the choke on the part of the operator.

When the engine has obtained normal operating temperature the choke valve must be fully opened to assure maximum power and economy. In addition, extended use of the choke results in more gasoline being supplied to the engine than can be burned. A large percentage of the unburned gasoline is lost through the exhaust system. The remainder of the raw gasoline is forced between the pistons and cylinder walls, washing away the protective oil film and increasing engine wear, and enters the crankcase where it dilutes the engine oil.

Any adjustments that are necessary on the carburetor should never be attempted until the engine has obtained its normal operating temperature and the choke valve has been placed in the wide open position.

THE MODEL TSX CARBURETOR

General

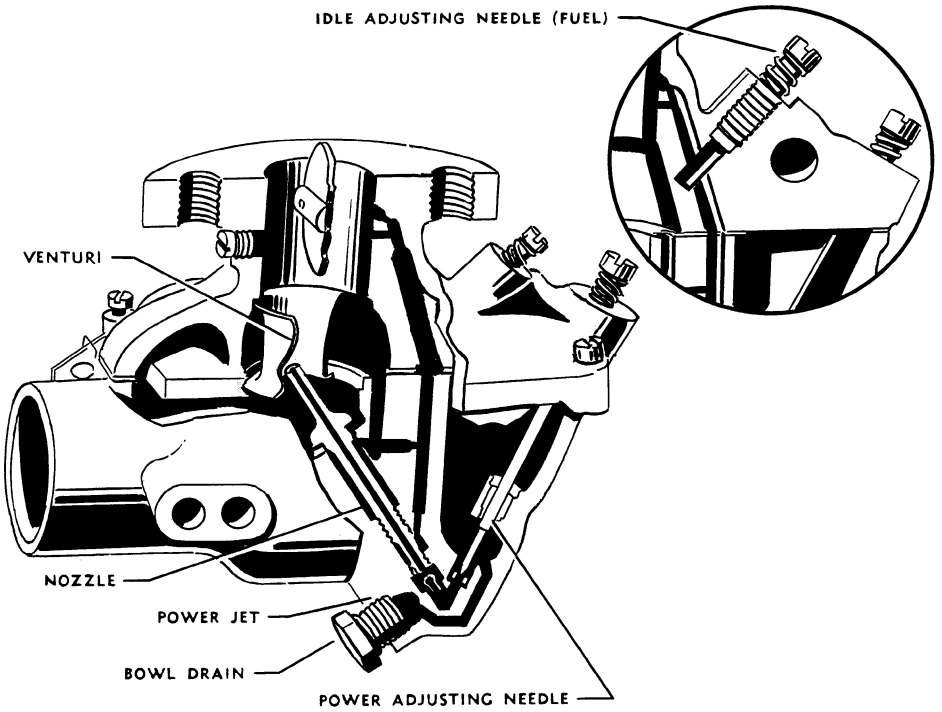

Figure N-7

The Model TSX Carburetor is manufactured in several different S.A.E. flange sizes for Case Engines. In addition to many variations in size, there are also variations necessitated by the specific requirement of the engines on which the carburetors are used. Many engines, for instance require special throttle and choke operating levers, and for purpose of calibration, they may have different size jets, nozzles, venturis, etc. For this reason when ordering parts, refer to the individual carburetor service parts list for the engine on which the carburetor is installed.

The Model TSX Carburetor consists of only two major castings:

1. The throttle body casting which forms the cover for the fuel bowl, and contains the float needle valve and seat, the float, and throttle fly and shaft.
2. The fuel bowl casting which contains the choke fly assembly, the main adjusting needle seat, and the main nozzle.

It will be noticed (Figure N-7) that all passages, whenever possible, are drilled from the top face of the fuel bowl casting to prevent any fuel leaks to the outside of the carburetor, because of shrunken gaskets or defective hole plugs, and also to prevent vapor lock or "percolation " of the fuel when the carburetor is operated under extremely hot conditions, resulting in hard starting or erratic engine operation.

The Model TSX Carburetor is sealed against dust or dirt. All air entering the fuel bowl of the carburetor must first pass through the air cleaner. The throttle shaft bearings and choke shaft bearings are sealed to eliminate dust and dirt entering at these points.

The Model TSX Carburetor is provided with an idle adjusting needle which alters the fuel and air proportions of the mixture which enters the carburetor bore from the idle passage. Figure N-7, shows an idle adjusting needle which alters the amount of fuel and air mixture which enters the carburetor bore from the idle passage. This is commonly known as a fuel adjusting idle needle. It is important to remember in setting the idle mixture, the fuel adjusting idle needle must be turned OUT, or counterclockwise, to enrich the idle mixture.

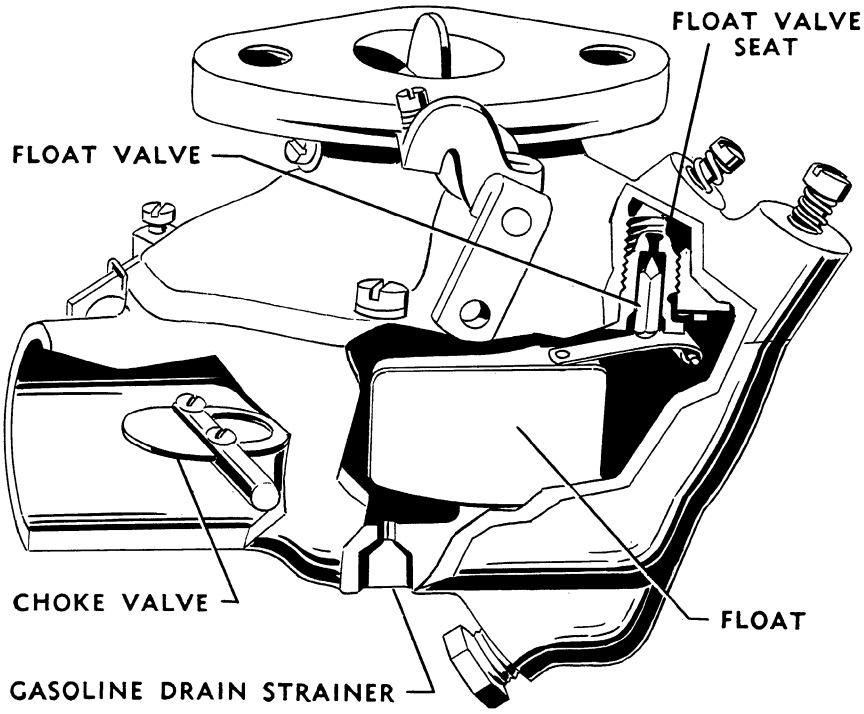

Figure N-8

A dual float mechanism (Figure N-8 is used in the bowl and almost completely surrounds the nozzle. This design and construction is such that the engine can be operated at an angle up to 45 degrees without seriously affecting the fuel and air ratio and without flooding because the mean level at the nozzle tip is practically constant at any angle of operation.

SERVICING THE MODEL TSX CARBURETORS

Three different combinations of Model TSX Carburetors have been used on Case A-251 and A-284 Gasoline Engines. Refer to Figure N-9.

Each carburetor can be identified by the Model and Number stamped on the identification tag, Figure N-9. The following service instructions are basically the same for all Model TSX Carburetors since they incorporate the same engineering principles and all function alike. Wherever there is a difference in servicing, between carburetors, it will be noted in the instructions.

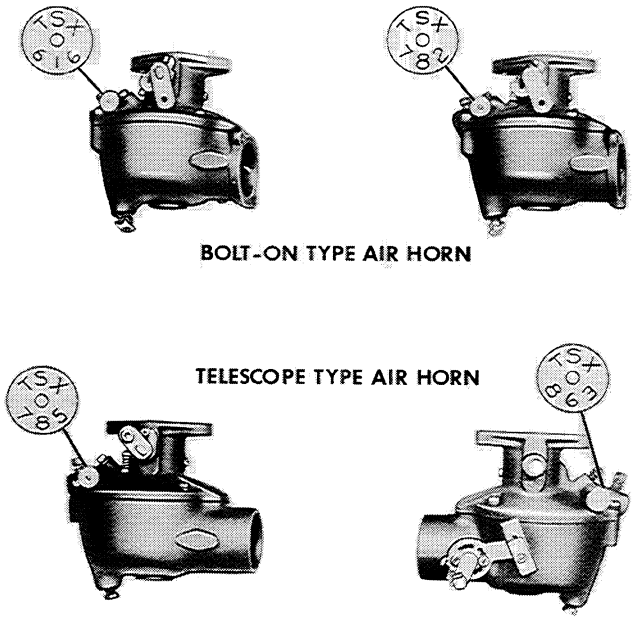

Figure N-9

The following procedure for servicing of a Model TSX Carburetors is for a complete carburetor overhaul. After removing the carburetor from the engine, wash it thoroughly with a cleaning fluid such as mineral spirits to permit examination of the external parts for damage. The carburetor consists of two major assemblies:

(a) The throttle body casting which forms the cover for the fuel bowl and contains the float needle valve and seat, the float, and throttle valve and shaft.

(b) The fuel bowl casting which contains the choke valve assembly, the main adjusting needle seat, and the main nozzle.

Disassembly

1. Remove the carburetor drain plug to drain any gasoline that may have remained in the fuel bowl.

NOTE: Before starting the actual disassembly, it is important to first remove the main and idle adjustment needles to prevent damaging them as the carburetor is disassembled. Refer to steps 2 and 3 on Page N-14.

2. Remove the idle adjustment needle, Figure N-10

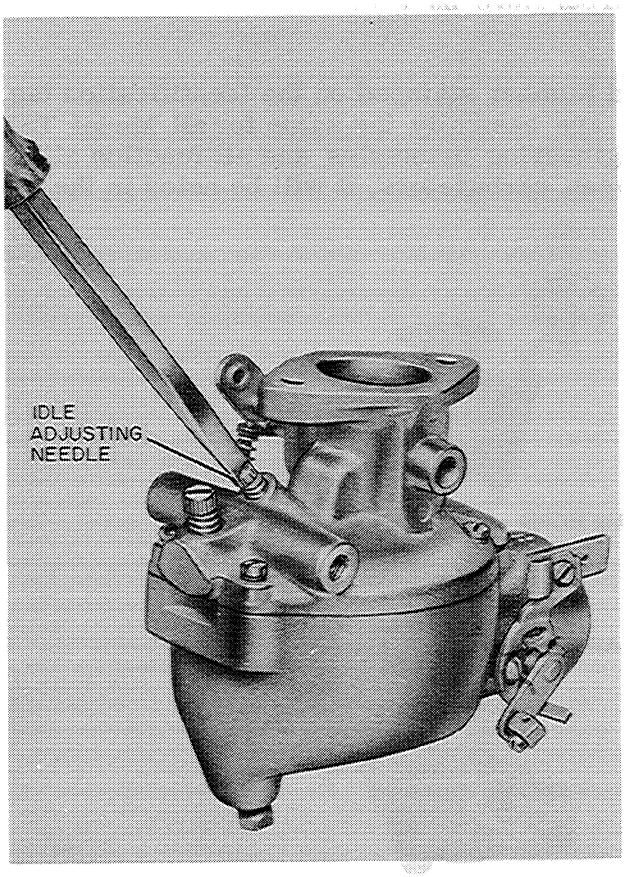

Figure N-10

3. Remove the main adjustment needle.

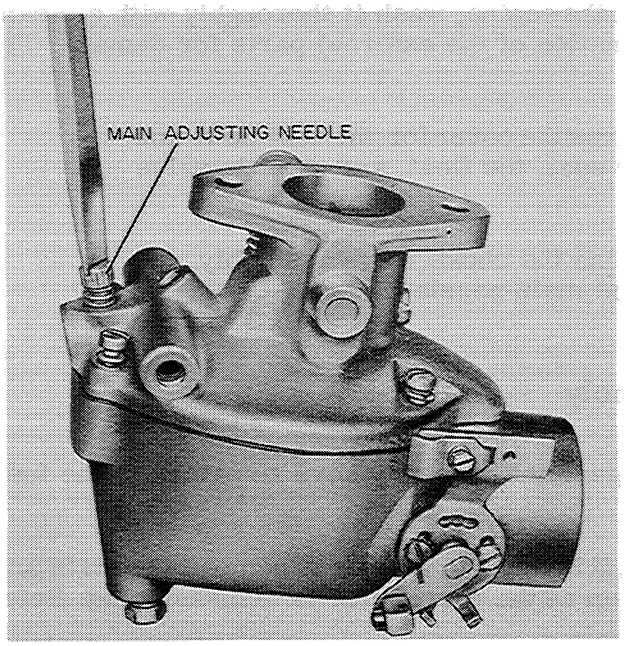

Figure N-11

4. Remove the fuel bowl screws. Then invert the carburetor to separate the castings, being careful not to damage the float.

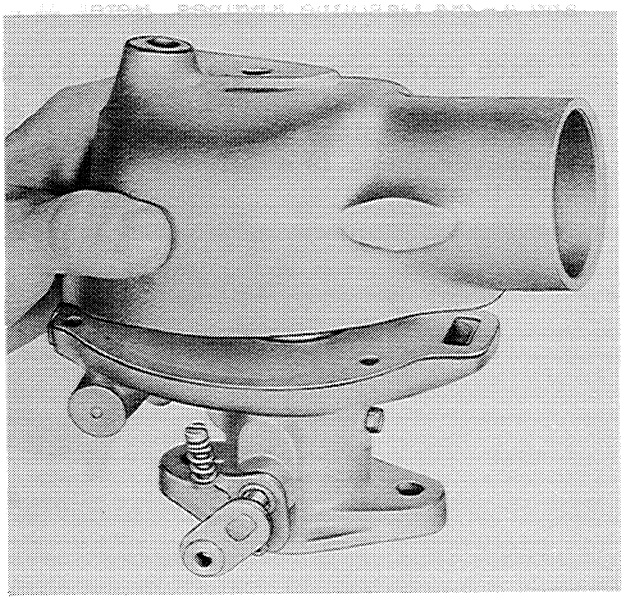

Figure N-12

5. Remove the float shaft and float assembly, Figure N-13.

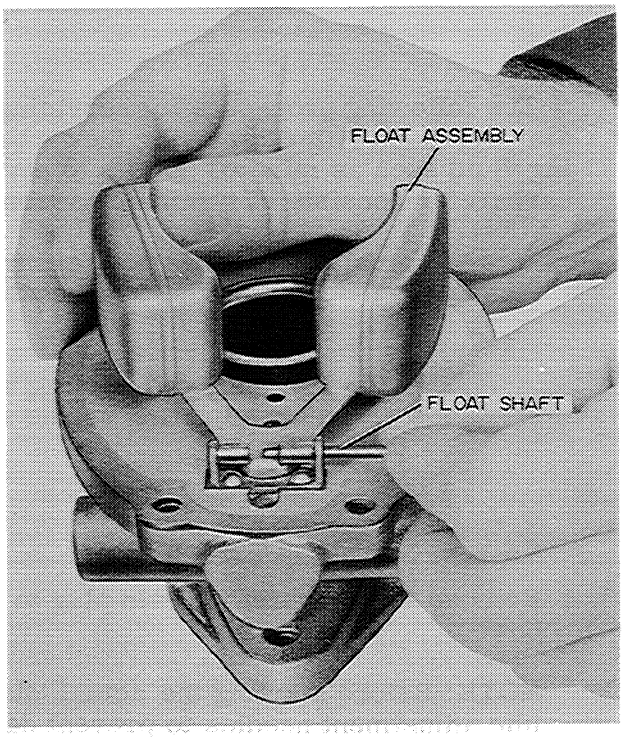

Figure N-13

6. Remove the float needle valve and seat, Figure N-14.

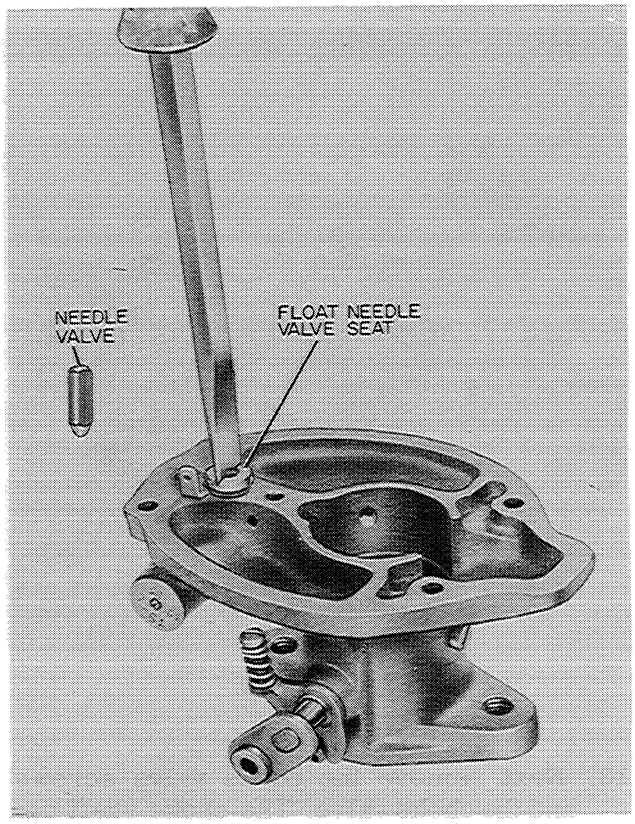

Figure N-14

7. Remove the idle jet using a proper size screw driver so as not to damage the jet, Figure N-15.

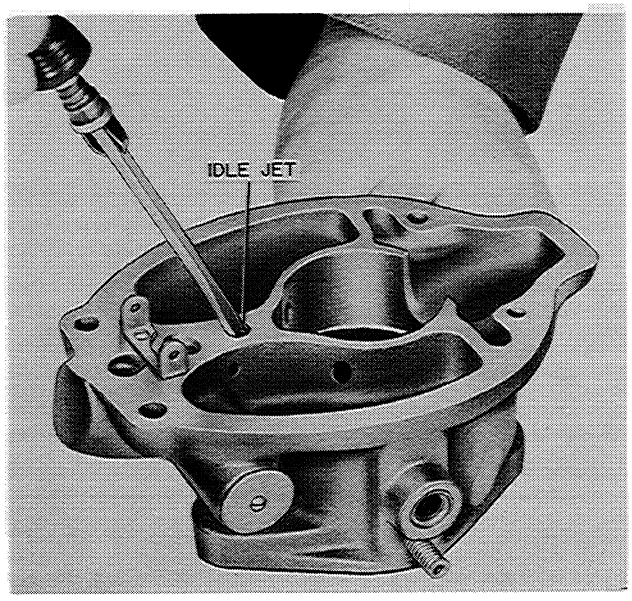

Figure N-15

8. Remove the throttle valve screws and the throttle valve, Figure N-16.

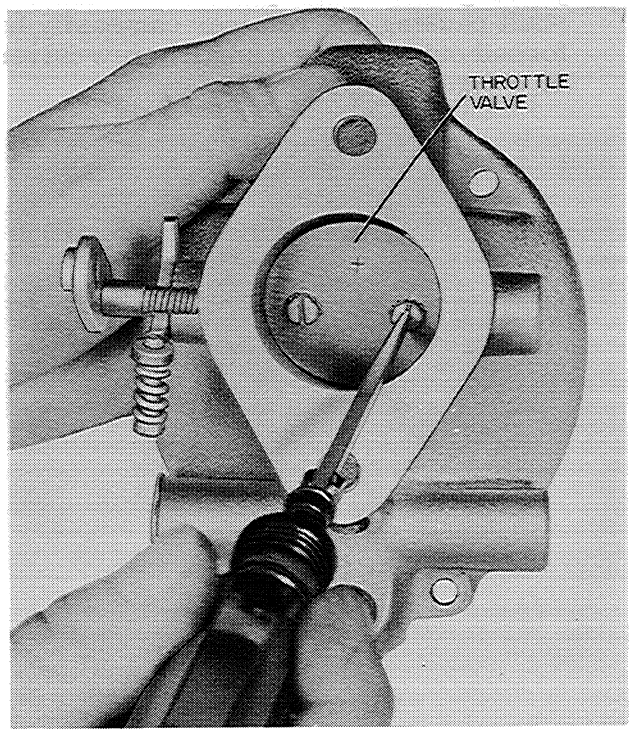

Figure N-16

9. The throttle shaft can then easily be removed and inspected for wear, Figure N-17.

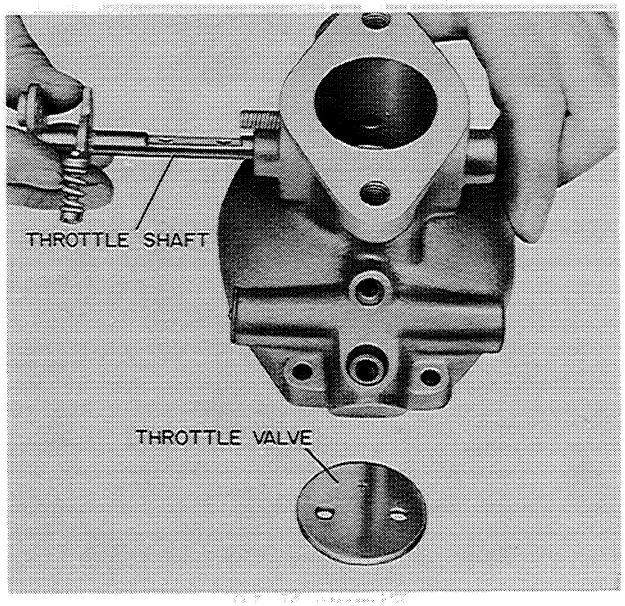

Figure N-17

10. If there is excessive wear between the shaft and the throttle body, the shaft and packing should be replaced. The throttle shaft packing and retainer can easily be forced out by using a small screw driver or a punch, Figure N-18.

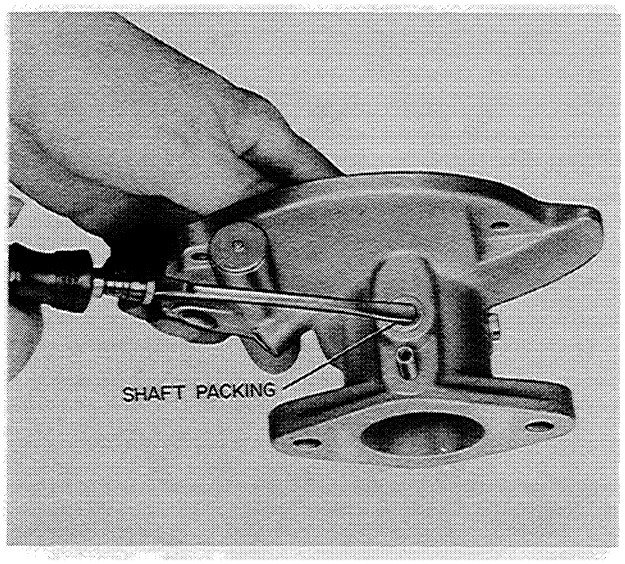

Figure N-18

11. Next remove the main adjusting needle seat, Figure N-19.

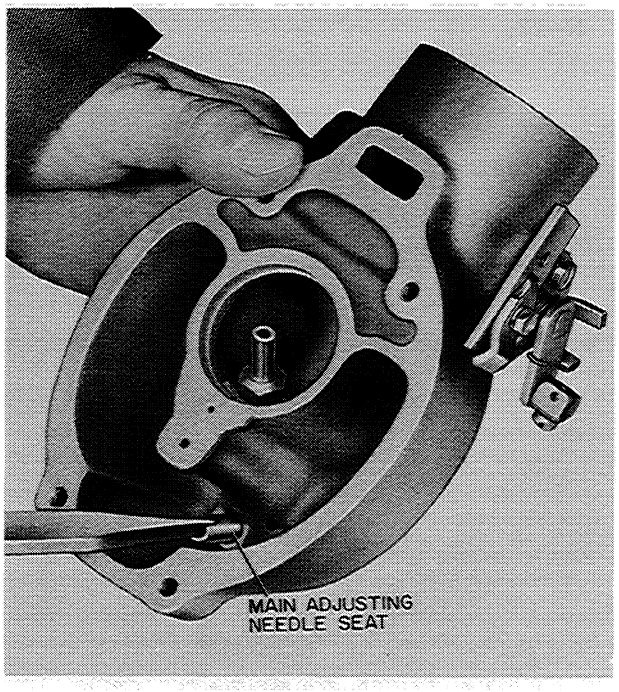

Figure N-19

12. Then remove the main nozzle and gasket, Figure N-20.

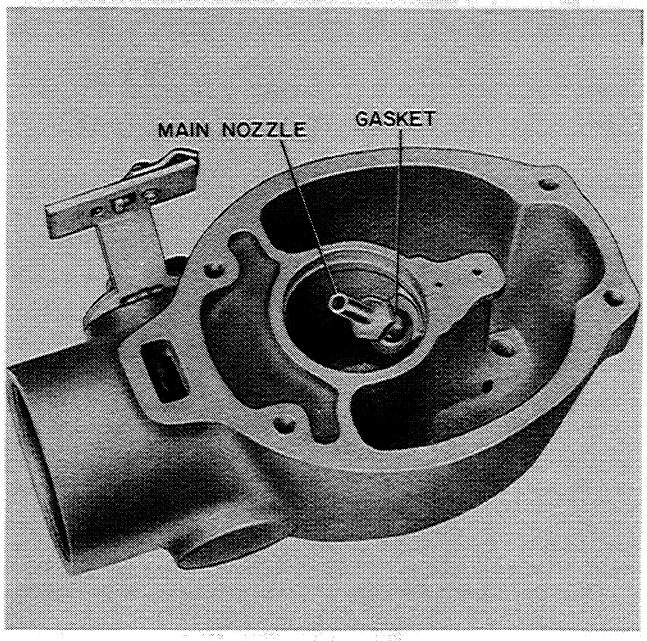

Figure N-20

13. Next remove the choke valve screws and the choke valve. The choke shaft can then be removed by sliding it out of the fuel bowl casting, Figure N-21.

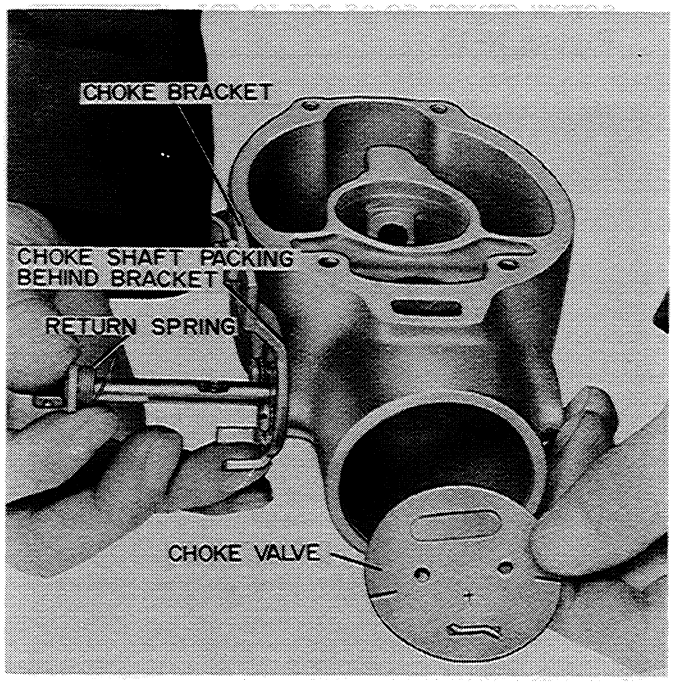

Figure N-21

14. Remove the two screws holding the choke bracket and remove the bracket and the choke shaft packing, Figure N-22.

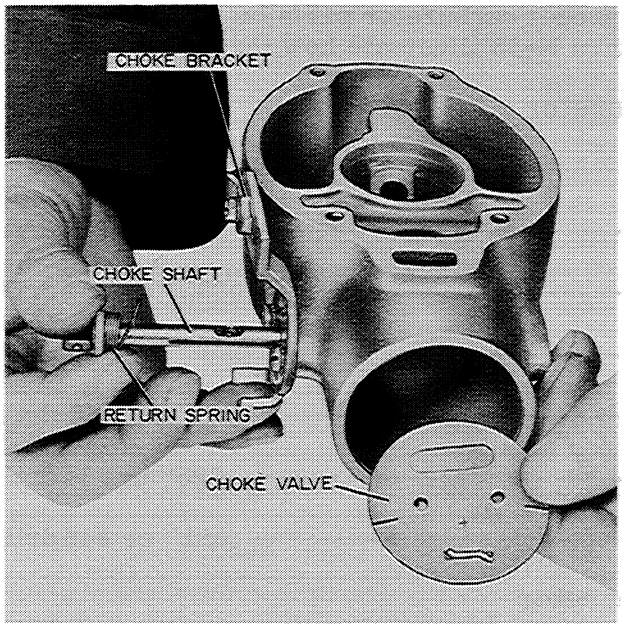

Figure N-22

15. The carburetor parts are now ready for cleaning. Place all parts to be cleaned in a good parts cleaning solvent such as "Bendix Speed Clene" and let them soak until all dirt, gum and varnish have been removed from the parts, Figure N-23.

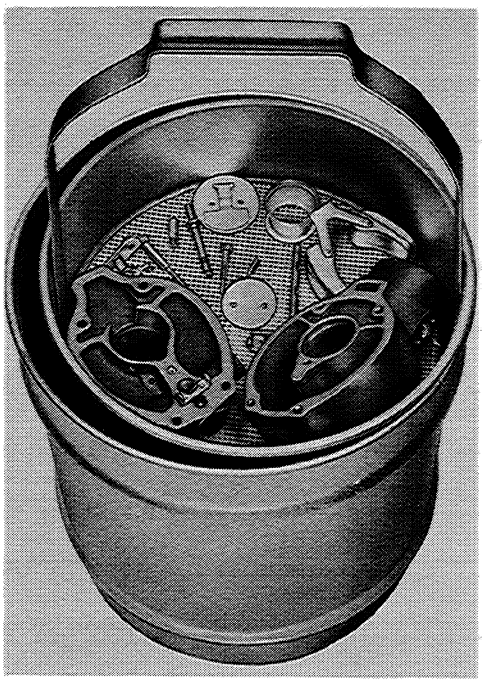

Figure N-23

After taking the parts out of the solvent, rinse them off in clean mineral spirits.

16. After rinsing the parts in mineral spirits use compressed air to clean out the small vent holes and channels. Do not use wire or small drills to clean out the small vent holes as a slight change in the size of these holes will affect the carburetor operation, Figure N-24.

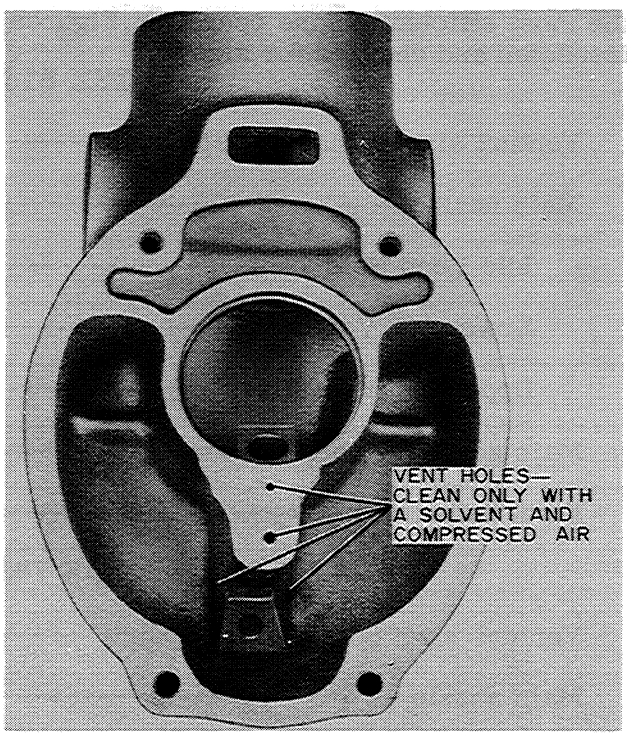

Figure N-24

CARBURETOR INSPECTION

Before reassembly,it is very important that the proper carburetor parts be re-installed for the most efficient engine operation,Figures N-26 thru N-33 illustrate how these parts can be inspected and checked for size.

TSX 616 Carburetor

Venturi size (at narrowest point) ---------- 29/32"

Main nozzle ---------- .147" or #26 drill

Idle Feed Hole ----------.0635" or #52 drill

Lower Air Vent Hole ---------- .0400" or #60 drill

Upper Air Vent Holes ---------- .0350" or #65 drill

Main adjusting needle seat ---------- .055" or #54 drill

Float valve seat ---------- .081" or #46 drill

TSX 782 Carburetor

Venturi size (at narrowest point) ---------- 1-1/16"

Main nozzle ---------- .147" or #26 drill

Idle Feed Hole ----------.0635" or #52 drill

Lower Air Vent Hole ---------- .0400" or #60 drill

Upper Air Vent Holes ----------.0350" or #65 drill

Main Adjusting needle seat ----------.067" or #51 drill

Float valve seat ---------- .081" or #46 drill

TSX 785 and TSX 863 Carburetors

Venturi size (at narrowest point) ---------- 1-1/16"

Main nozzle ----------.147" or #26 drill

Idle Feed Hole ----------.0635" or #52 drill

Lower Air Vent Hole ----------.0400" or #60 drill

Upper Air Vent Holes ----------.0350" or #65 drill

Main adjusting needle seat ---------- .073" or #49 drill

Float valve seat ----------.100" or #39 drill

Refer to Pages N-19 and N-20 for measuring procedure

MEASURING THE CARBURETOR NOZZLE AND SEATS

Refer to Page N-18 for correct hole sizes

A set of numbered drills as shown in Figure N-25 are used for measuring the various parts to make sure the correct parts are being used.

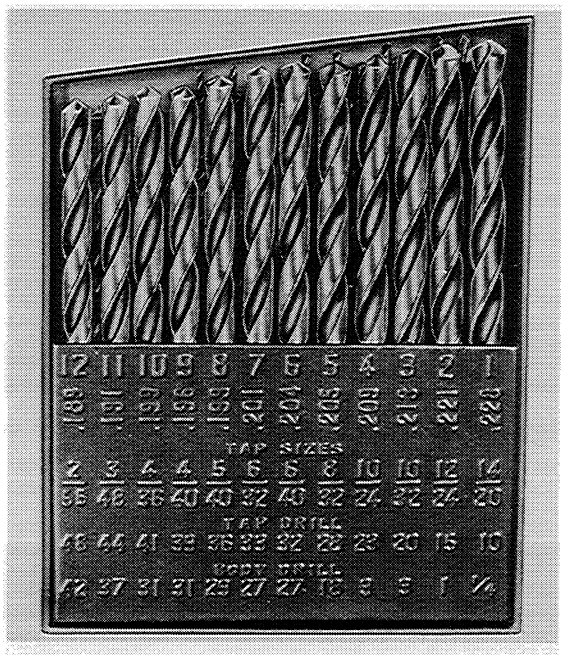

Figure N-25

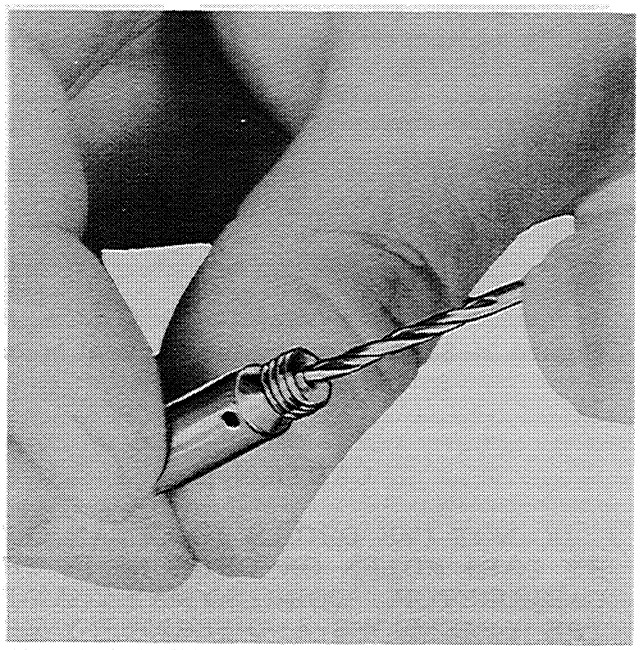

Figure N-26

Measuring the Main Adjusting Screw Seat.

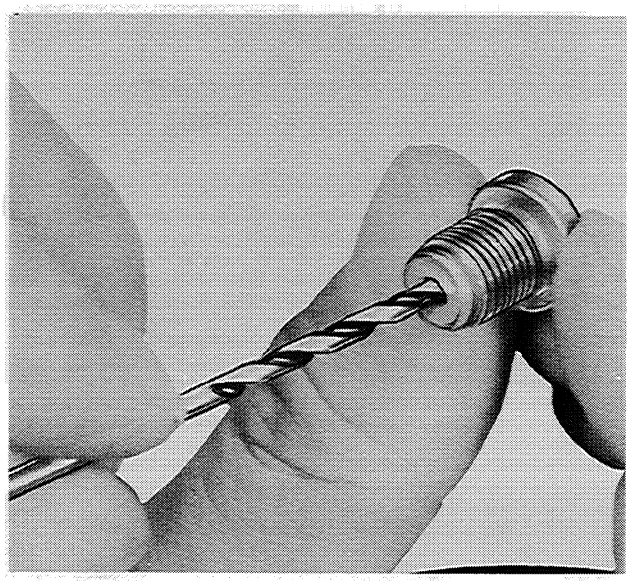

Figure N-27

Measuring the Needle Valve Seat.

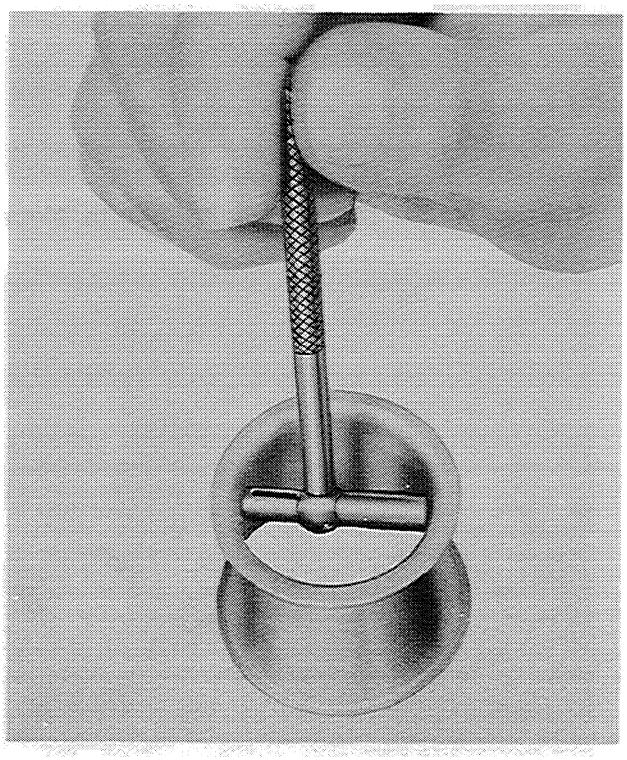

Figure N-28

Measuring the Venturi at its narrowest point, Figures N-28 and N-29.

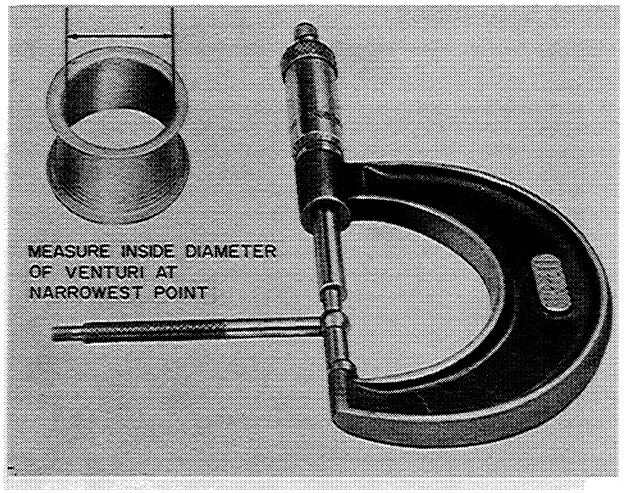

Figure N-29

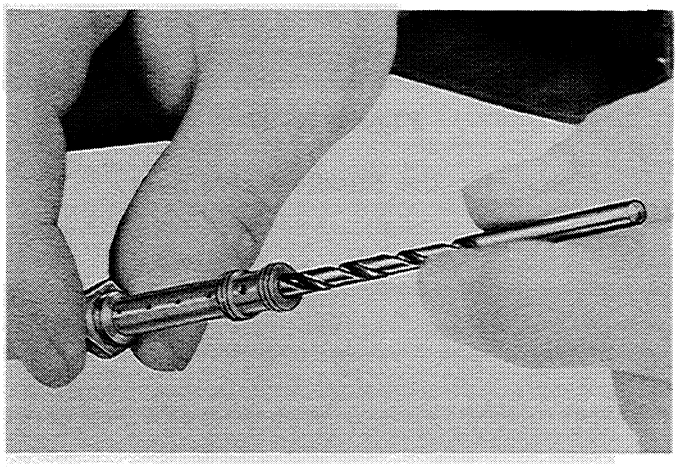

Figure N-30. Measuring the Main Nozzle

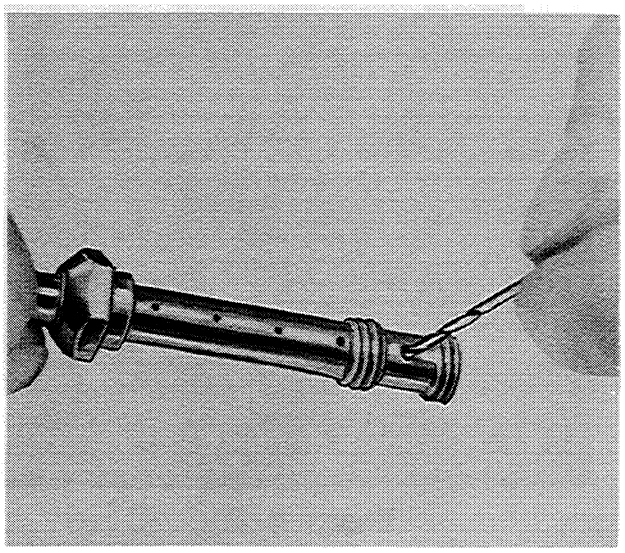

Figure N-31. Measuring the Idle Feed Hole of the Main Nozzle.

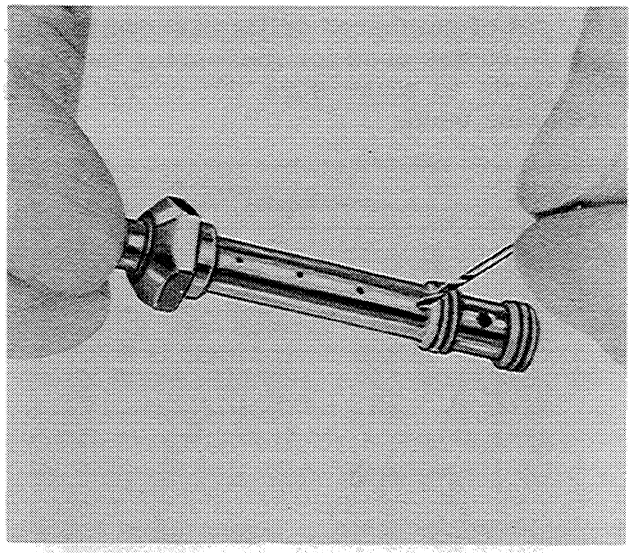

Figure N-32. Measuring the lower air vent hole in the Main Nozzle

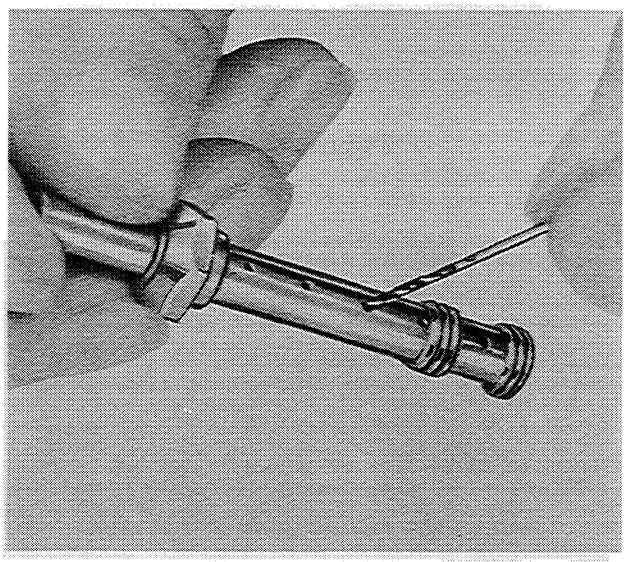

Figure N-33. Measuring the air vent holes in the Main Nozzle

CAUTION

DO NOT USE DRILLS TO CLEAN OUT BY PASS HOLES OR ORIFICES IN THE CARBURETOR. DOING SO MAY CHANGE THE DIMENSIONS AND SERIOUSLY EFFECT THE OPERATION OF THE CARBURETOR.

ASSEMBLY OF THE MODEL TSX CARBURETOR

1. Install the choke shaft packing and the choke bracket, Figure N-34.

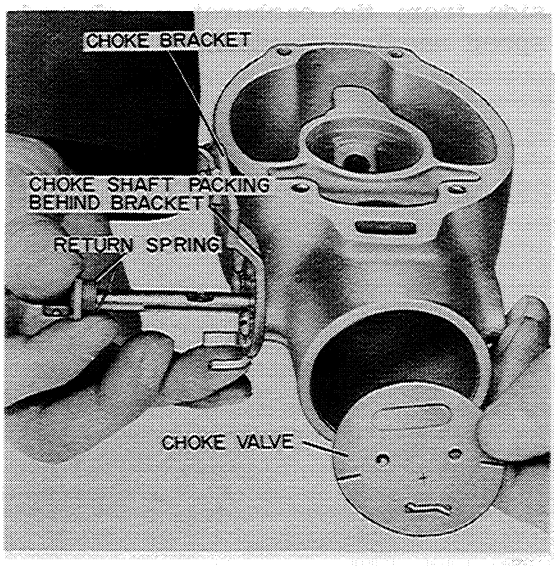

Figure N-34

2. Install the return spring on the choke shaft hooking one end to the choke bracket and push the shaft into position, Figure N-35.

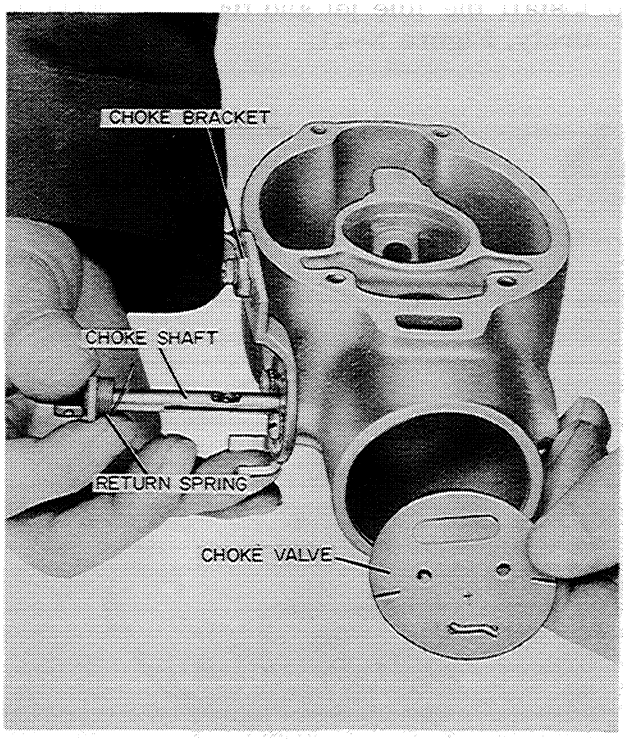

Figure N-35

3. Install the choke valve so the relief valve faces down and faces the inside of the carburetor when the choke is closed, Figure N-36.

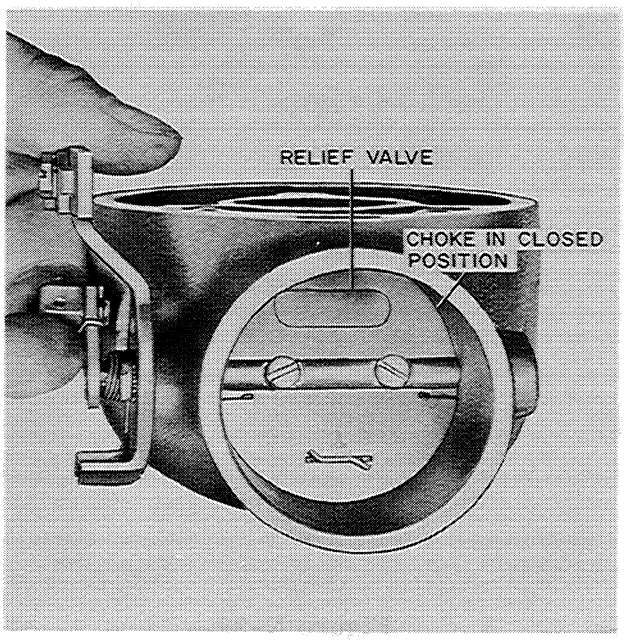

Figure N-36

4. Install the main nozzle and gasket, Figure N-37.

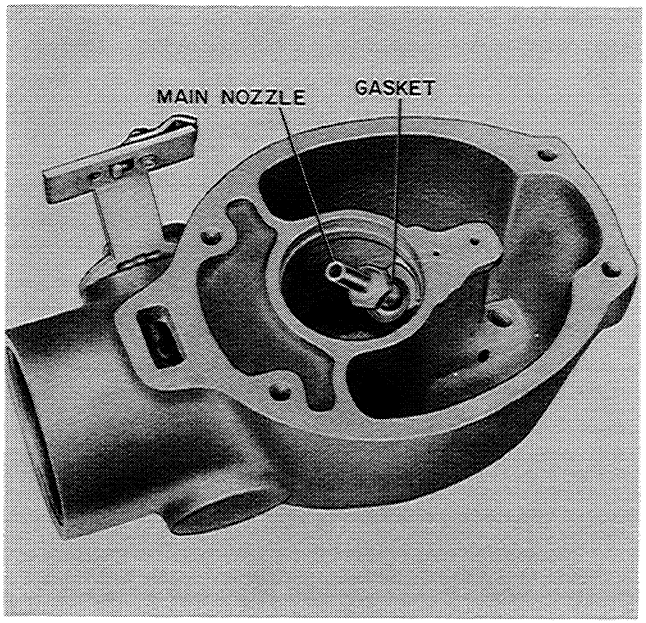

Figure N-37

5. Install the main adjusting needle seat, Figure N-38.

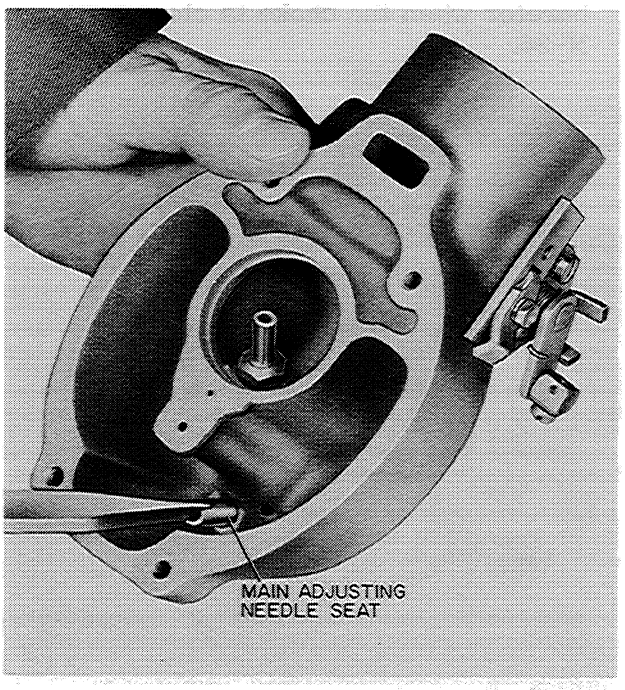

Figure N-38

6. Install new throttle packing and retainer. Push the retainer in until it is flush with the casting face as shown in Figure N-39.

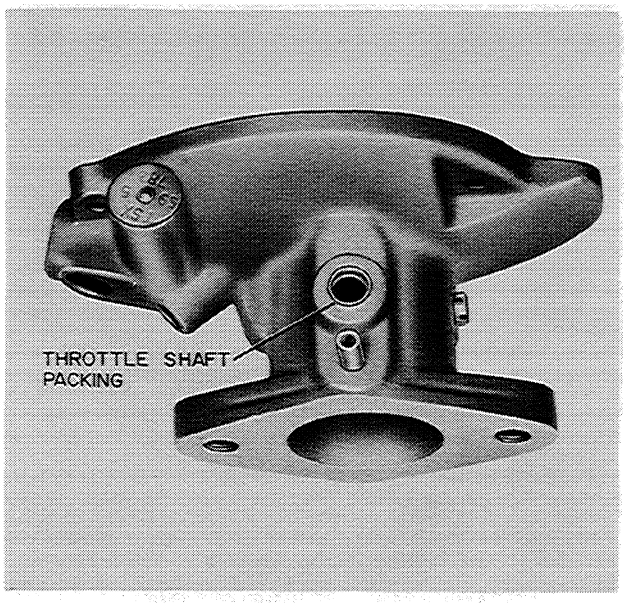

Figure N-39

7. Slide the throttle shaft into the carburetor body and install the throttle valve with the angle identification mark facing toward the flange face and also on the opposite side from the carburetor high and low speed needle adjustments, Figure N-40.

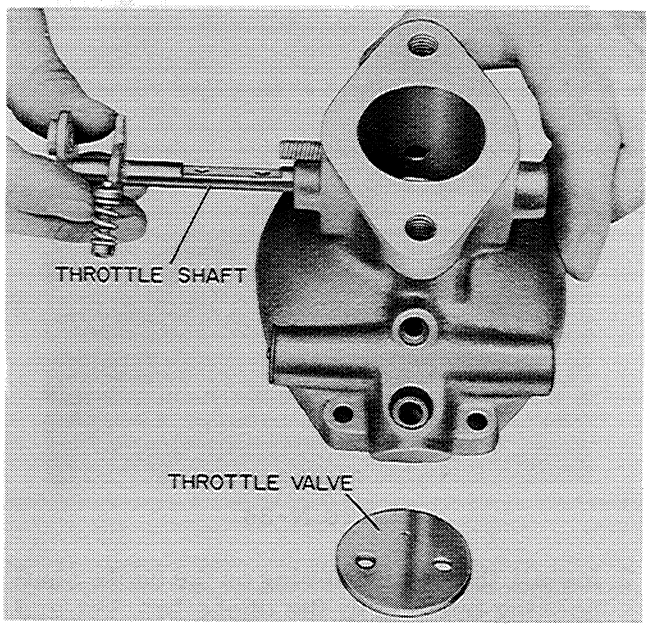

Figure N-40

8. Install the idle jet and tighten down securely, Figure N-41.

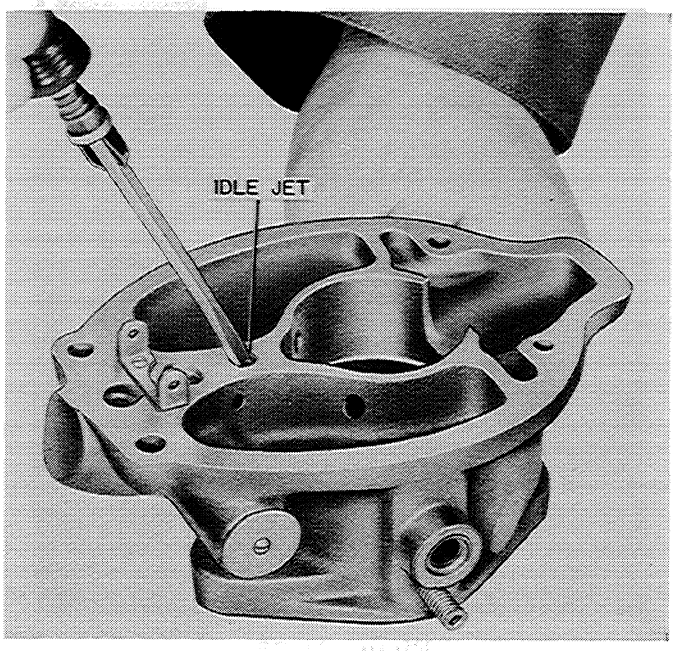

Figure N-41

9. Install the float needle valve seat using a new gasket, Figure N-42.

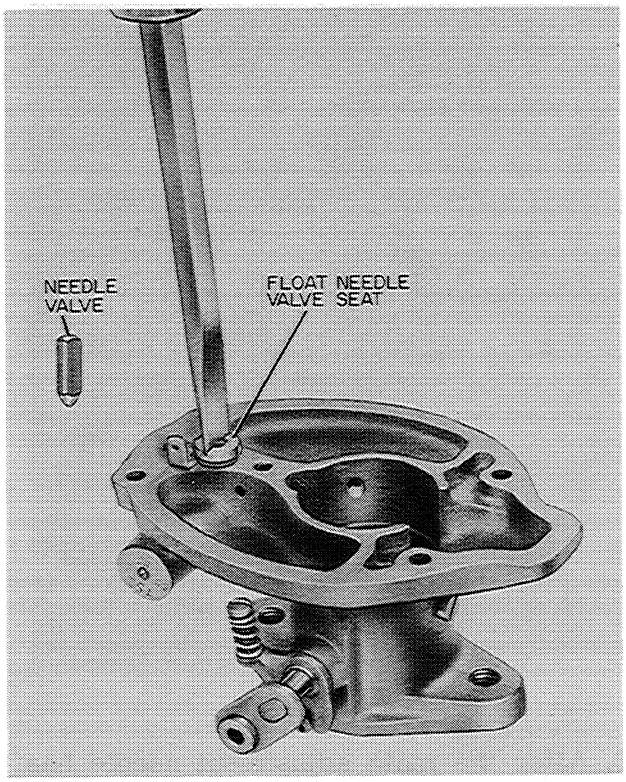

Figure N-42

10. Install the float needle valve.

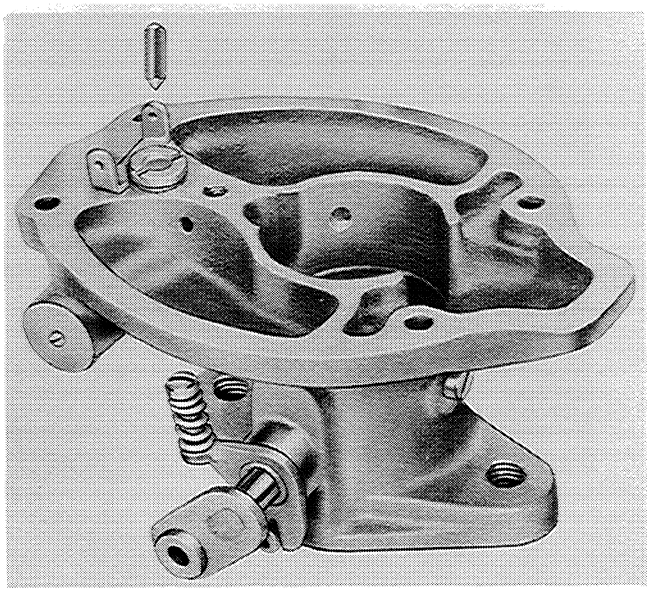

Figure N-43

11. The venturi should be installed with the large opening toward the flange face of the carburetor. The bowl gasket should then be installed, Figure N-44.

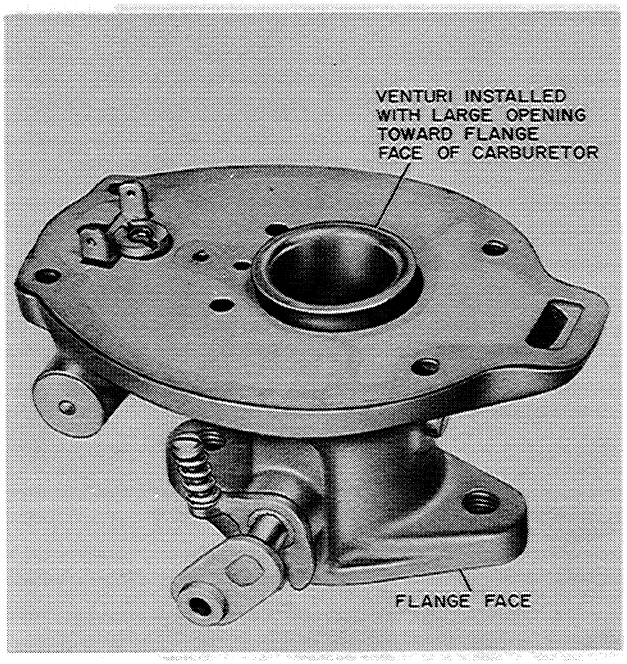

Figure N-44

12. Assemble the float in position with the float shaft, Figure N-45.

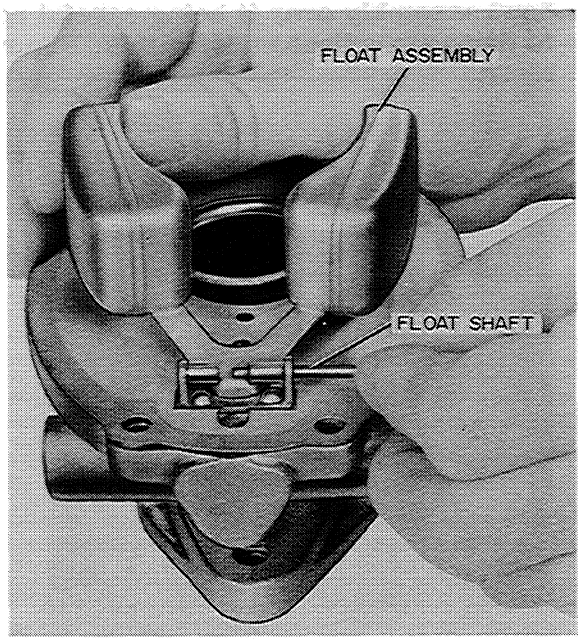

Figure N-45

13. The float level is gauged from the gasket face to the nearest edge of the float. The distance should measure 1/4". If an adjustment is necessary, it is done by bending the float arms, Figure N-46.

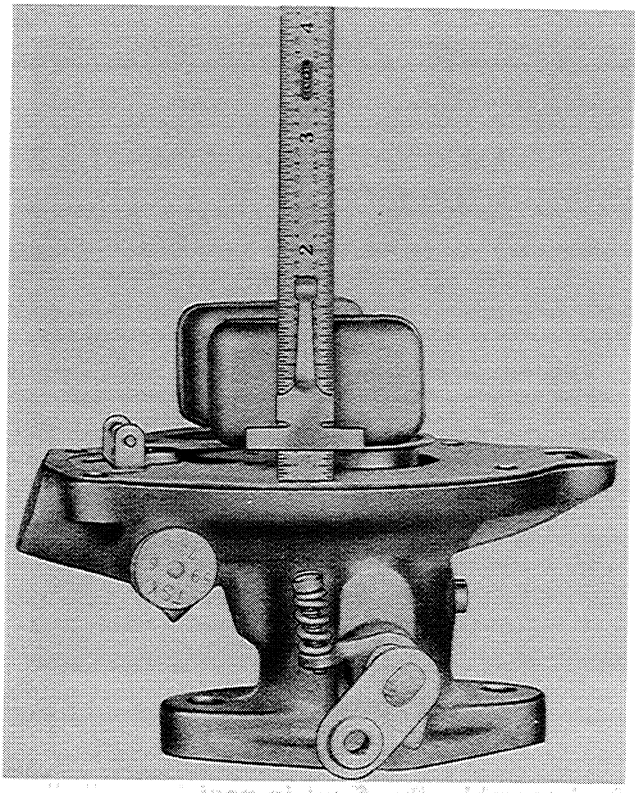

Figure N-46

14. Invert the throttle casting and place the bowl assembly over it being careful not to damage the float in doing this, Figure N-47.

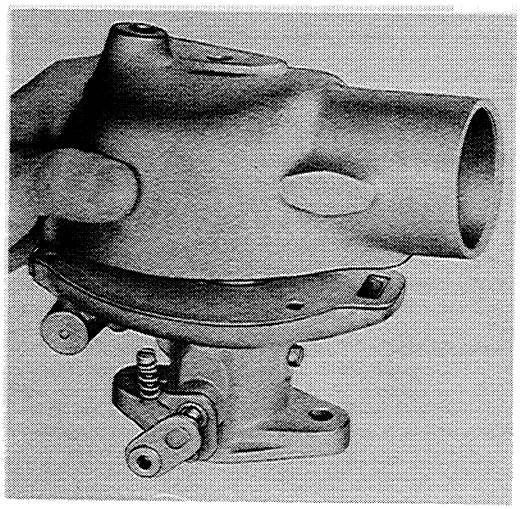

Figure N-47

15. Install the four bowl screws, but do not tighten until the main adjustment needle has been installed, Figure N-48.

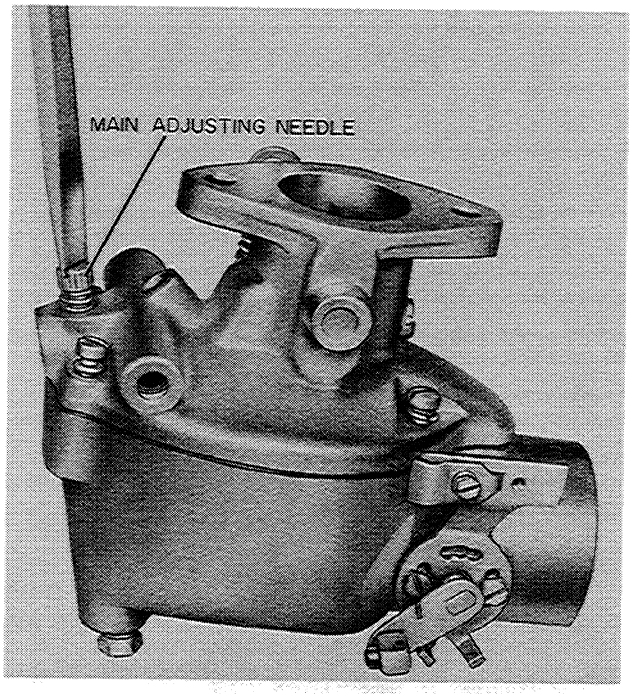

Figure N-48

16. After the main adjustment needle has been installed the four bowl screws should be tightened, being careful to center the gasket as this is being done, Figure N-49.

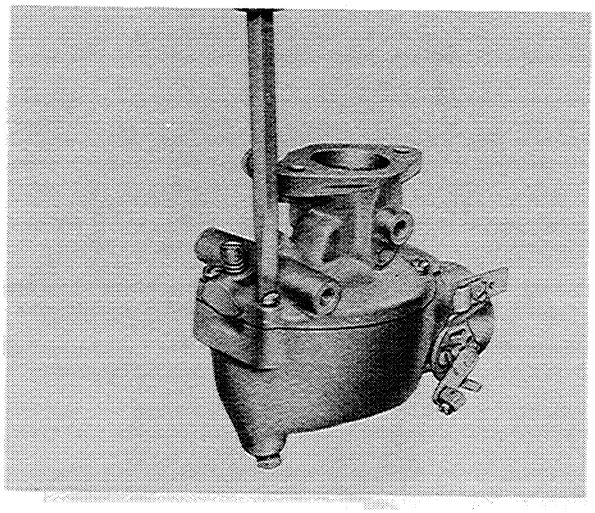

Figure N-49

17. Install the idle adjustment needle, Figure N-50.

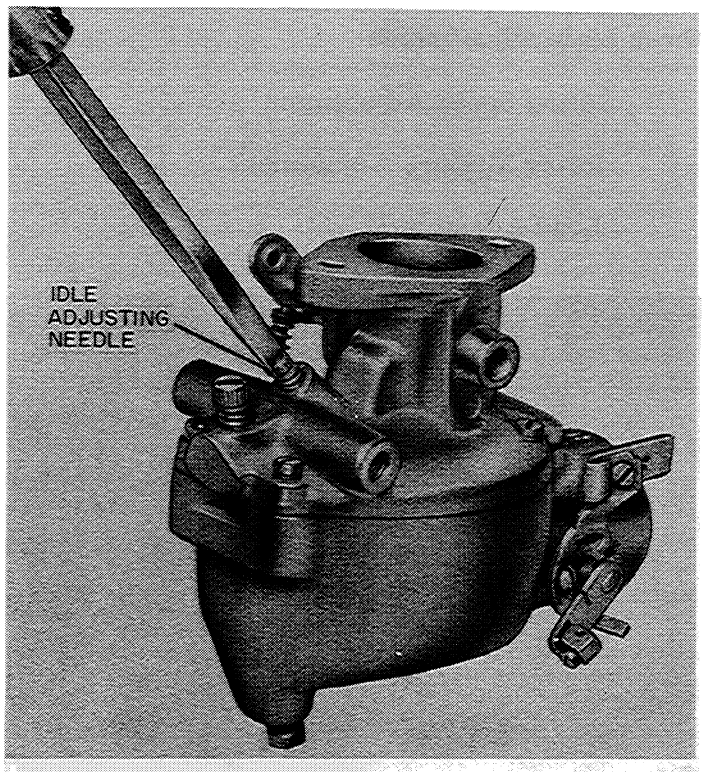

Figure N-50

CARBURETOR ADJUSTMENT INSTRUCTIONS

The carburetor used on your Case engine is very simple to adjust.

The carburetor has three main adjustments:

Idling Speed Adjustment

Idling Mixture Adjustment

Load Adjustment

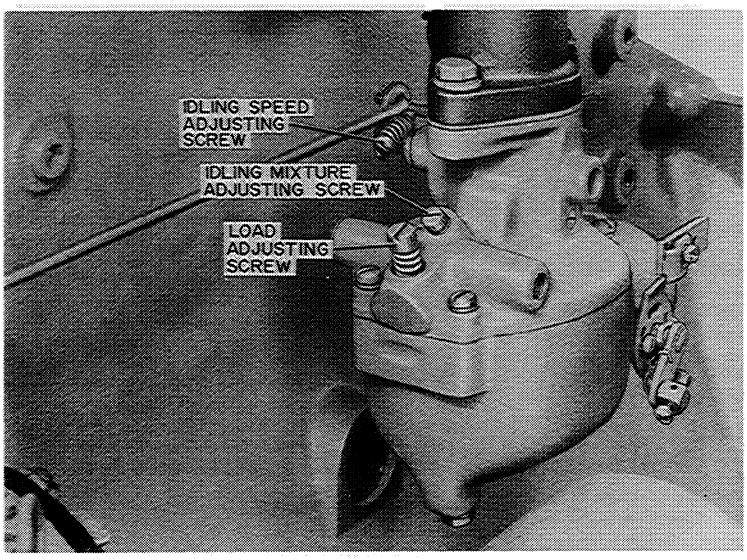

Figure N-51

IDLING SPEED AND IDLING MIXTURE ADJUSTMENT

Adjustments for idling speed and idling mixture can best be made together when the engine is running at the proper operating temperature. The accelerator pedals must not be depressed or the engine accelerated to make this adjustment.

IDLING SPEED ADJUSTMENT

Idling Speed Adjustment is simply a stop screw that determines how far the carburetor throttle valve will close when the engine is idling. The idling speed adjustment should be set so the engine operates at a speed of approximately 600 RPM.

IDLING MIXTURE ADJUSTMENT

Idling Speed Mixture Adjustment is determined by turning the adjustment screw out until the engine operates roughly, then turn the screw in until the engine idles smoothly. The correct adjustment is:

MODEL TSX 616 ---------- ONE TURN OPEN

MODEL TSX 782 ---------- ONE TURN OPEN

MODEL TSX 785 ---------- 1-1/8 TURNS OPEN

LOAD ADJUSTMENT

After the preliminary load adjustment has been made however, it may be necessary to slightly readjust the carburetor load setting when the engine is under load.

To obtain a starting point, operate the engine under no load at full governed engine speed. Be sure the engine is up to the correct operating temperature. Turn the load adjustment screw in (clockwise) until the engine misfires and power falls off; then turn it out (counter-clockwise) until the engine turns smoothly. Turning the adjustment out produces a richer mixture, while turning it in produces a leaner mixture. The correct setting is:

MODEL TSX 616 ---------- 1-3/4 TO 2 TURNS OPEN

MODEL TSX 782 ---------- 1-3/4 TO 2 TURNS OPEN

MODEL TSX 785 ---------- 2 TO 2-1/4 TURNS OPEN

Place the engine under load and carefully observe how it reacts. If there is backfiring through the carburetor, loss of power, or the engine tends to stall when the load is applied, it indicates the setting is too lean. Turn the load adjustment screw out (counter-clockwise) not more than 1/8 of a turn and again try the engine under load. Continue to do this until the engine pulls smoothly when the load is applied.

Note

Avoid the use of excessively lean mixtures. Operating the engine with too lean a carburetor load mixture causes loss of power and high exhaust valve temperatures.

Although it is not necessary or advisable to constantly readjust the carburetor settings, they should be reset when the load conditions or the fuel quality is changed radically. Operating an engine under light loads with an overly rich carburetor setting not only wastes fuel; but may cause undue wear and damage from dilution. Operating under heavy loads with a too lean carburetor setting will cause general engine overheating, loss of power, and excessive exhaust valve temperatures that will burn the valves seriously.

NOTE: The CASE CORPORATION **reserves the right to make improvements in design or changes in specifications at any time without incurring any obligation to install them on units previously sold.**

SECTION

A

SERVICING THE HYDRAULIC CYLINDERS ON CASE 4 WHEEL DRIVE UNIT LOADERS

Rac. Form 9-76621

PRINTED IN U.S.A.

TABLE OF CONTENTS

INTRODUCTION . . . . . A-3 and A-4

OIL FLOW

Tilt Lever in the Tilt Up Position A-6
Lift Lever in the Raise Position A-6
Tilt Lever in the Tilt Down Position A-8
Lift Lever in the Lower Position A-8
Function of Drop Check Valves A-10

SERVICING THE HYDRAULIC SYSTEM A-12

HYDRAULIC SYSTEM PRESSURE CHECK A-13

REMOVAL OF LIFT CYLINDERS A-14

INSTALLATION OF LIFT CYLINDERS A-15

DISASSEMBLY OF LIFT CYLINDERS . . . . . A-16 and A-17

INSPECTION . . . . . A-18 thru A-20

ASSEMBLY OF LIFT CYLINDERS . . . . . A-21 and A-22

REMOVAL OF TILT CYLINDERS A-23

INSTALLATION OF TILT CYLINDERS A-24

DISASSEMBLY OF TILT CYLINDERS A-25

INSPECTION . . . . . A-26 thru A-28

ASSEMBLY OF TILT CYLINDERS . . . . . A-29 and A-30

INTRODUCTION

The following pages of this section contain a series of schematic flow diagrams of the hydraulic system in the Case Loaders. The flow diagrams, with the accompanying descriptions, will aid you in understanding the hydraulic system and help you to locate, diagnose, and properly correct any difficulties which may occur in the system.

A hydraulic system is basically the transmission of power by force exerted on a contained liquid. The liquid used in the hydraulic system of the Loader is esentially a non-compressible oil; therefore, force applied to the oil at one point in the hydraulic system will be transmitted to any point in the system that the oil reaches.

The following explanation of terms, used in the flow diagrams, will clarify the functions of the Loader hydraulic system components. The flow diagrams illustrate the components in their relative positions on the Loader. Note that the control valve is enlarged so the flow of oil through the valve body passages and around and through the lands and grooves on the two spools can be more easily traced.

THE RESERVOIR - contains the hydraulic oil supply for the Loader hydraulic system. The oil capacity of the reservoir exceeds the requirements of the hydraulic system, so a sufficiently high oil level is maintained in the reservoir at all times, to prevent the oil pump from ever drawing air into the system. When the Loader engine is started and runs, the gear type oil pump draws oil from the reservoir. The oil circulates through the hydraulic system and returns to the reservoir where it is filtered and cooled before again being drawn into the system.

THE PUMP - operates continuously wherever the Loader engine is running, drawing hydraulic oil from the reservoir and circulating the oil through the hydraulic system and filter back into the reservoir. Both gear and vane type hydraulic pumps are used on Case Unit Loaders. For simplicity, all the flow diagrams on the following pages show only the gear type pump. Regardless of the type of pump design, the function in the system is the same and that is to draw oil from the reservoir and circulate it through the system.

THE HYDRAULIC LINES - direct the flow of oil to and from the components of the hydraulic system.

THE FILTER - is located in the reservoir. The filter removes dirt and foreign material from the hydraulic oil as it returns to the reservoir. Though oil may remain in various parts of the hydraulic system for some time, eventually, all hydraulic oil returns to the reservoir where it is filtered and cleaned before re-entering the system.

THE CONTROL LEVERS - are linked to the spools in the control valve. When the control levers are moved to the various positions illustrated in the flow diagrams, the spools are moved within the control valve body, directing the hydraulic oil by opening ports and passages in the valve body and closing other passages to control the flow of pressurized oil.

THE CONTROL VALVE - by means of passages and ports in the valve body and lands and grooves on the spools, controls and directs the flow of pressurized hydraulic oil to the cylinders as well as redirecting the oil back to the reservoir. The control valve body contains a pressure relief valve. If extreme oil pressures build up in the hydraulic system, the pressure relief valve is forced open, allowing excess oil to return directly to the reservoir. The control valve body also contains two drop check valves (one for each spool) which prevents the Loader bucket from dropping suddenly as the control levers are moved from or through the neutral position.

THE CYLINDERS - contain the pistons and piston rods. The force of pressurized oil carried through the hydraulic lines into the cylinders is exerted on the pistons and moves them, extending or retracting the piston rods, which are connected to the Loader lift arms and bucket; thereby controlling the action of the bucket.

OIL SUCTION - is the vacuum created by the oil pump drawing hydraulic oil from the reservoir to supply the requirements of the hydraulic system.

CIRCULATING (LOW) PRESSURE - is the oil pressure created by a volume of oil flowing through the normal restrictions of the hydraulic lines, control valve and the filter.

WORKING (HIGH) PRESSURE - is the pressure created by the pump forcing a volume of oil through the hydraulic lines and control valve into the cylinders in an effort to move the pistons and overcome external resistance on the piston rods. The pump pressure continues to build up in the hydraulic system until either; the pistons are moved by the force of the oil, or the pressure relief valve in the control valve body is forced open allowing the excess oil to return directly to the reservoir.

STATIC PRESSURE is the pressure created by oil locked in the hydraulic system. Static pressure is characterized by no oil flow. Since the oil is blocked by the spools in the cylinders maintains a constant, equalizing pressure which is sufficient to retain the pistons in any given location within the cylinders, thus holding the bucket in any position while the control levers are in NEUTRAL.

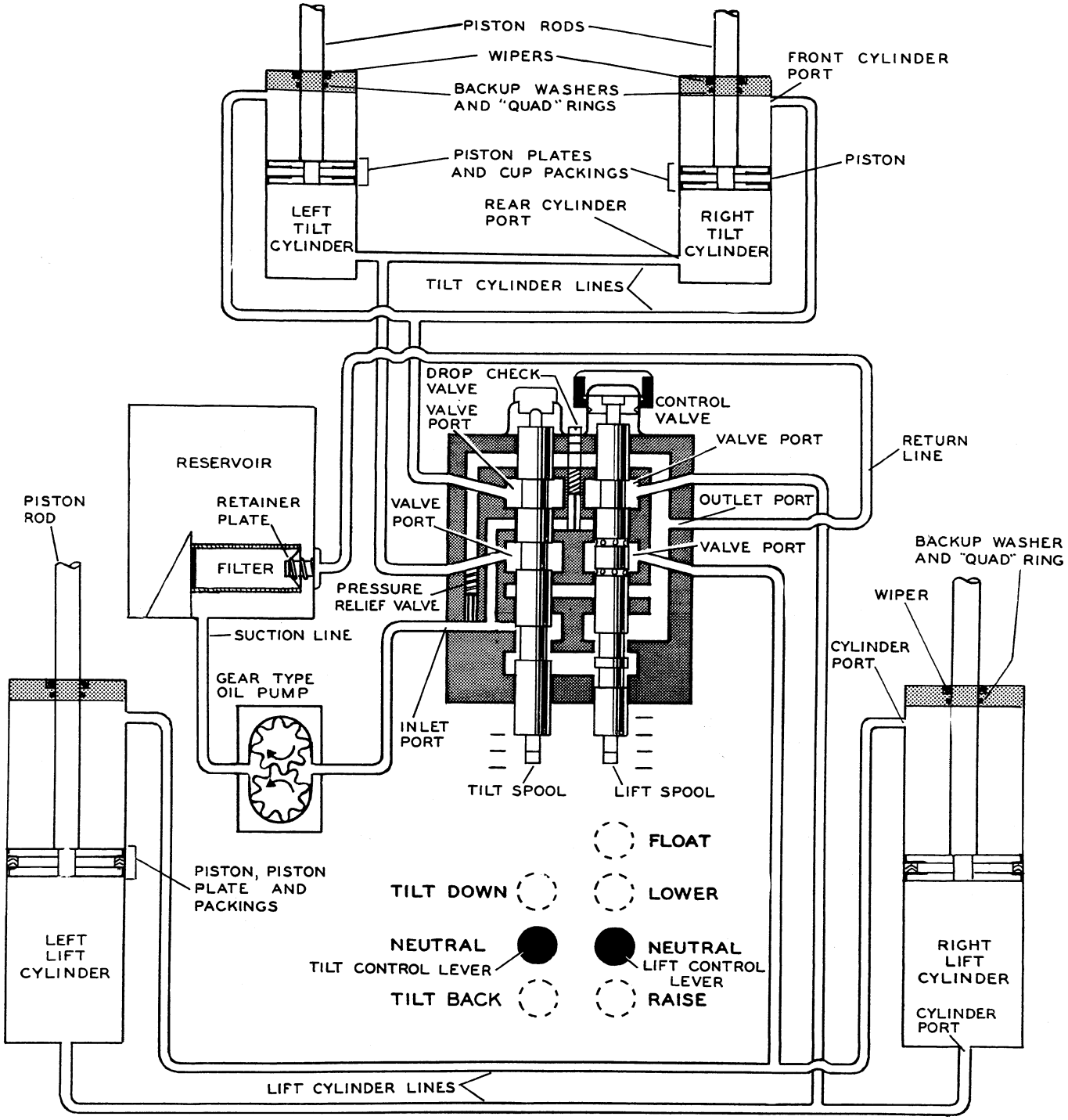
PISTON RODS
WIPERS
FRONT CYLINDER PORT
BACKUP WASHERS AND "QUAD" RINGS
PISTON PLATES AND CUP PACKINGS
PISTON
LEFT TILT CYLINDER
REAR CYLINDER PORT
RIGHT TILT CYLINDER
TILT CYLINDER LINES
DROP CHECK VALVE
CONTROL VALVE
VALVE PORT
VALVE PORT
RETURN LINE
RESERVOIR
PISTON ROD
RETAINER PLATE
VALVE PORT
OUTLET PORT
FILTER
VALVE PORT
BACKUP WASHER AND "QUAD" RING
WIPER
PRESSURE RELIEF VALVE
SUCTION LINE
CYLINDER PORT
GEAR TYPE OIL PUMP
INLET PORT
TILT SPOOL
LIFT SPOOL
FLOAT
PISTON, PISTON PLATE AND PACKINGS
TILT DOWN
LOWER
NEUTRAL
TILT CONTROL LEVER
NEUTRAL
LIFT CONTROL LEVER
TILT BACK
RAISE
LEFT LIFT CYLINDER
RIGHT LIFT CYLINDER
CYLINDER PORT
LIFT CYLINDER LINES

Figure A-1

TILT LEVER IN THE TILT UP POSITION LIFT LEVER IN THE RAISE POSITION

The Loader operator can move both the tilt and lift control levers to the rear together, causing pressurized hydraulic oil to enter both the tilt cylinders and the lift cylinders at the same time, performing the dual action of tilting the bucket up and raising the lift arms simultaneously. This simultaneous action of the bucket is called "crowding" and allows the Operator to get a larger payload in a shorter time than he could by operating each control lever separately.

More force is needed in the lift cylinders to move the pistons than is required to move the pistons in the tilt cylinder. The return oil from the lift cylinders is restricted more than the oil returning from the tilt cylinders. Consequently, as long as there is equal, sustaned manual pressure on both control levers, the Loader bucket will always tilt faster than the lift arms will raise. This more rapid tilt reaction to resistance on the tilt cylinder piston rods means the back of the bucket fills quicker and heaping payloads can be obtained in a shorter time.

In some operations it may be advantageous to have the lift arms raise more rapidly than the bucket tilts. This can be accomplished by "feathering" or "inching" the tilt control lever, while full manual pressure of the same hand is applied on the lift control lever.

If the tilt reaction of the bucket is not faster than the lift reaction, when equal, sustained, manual pressure is applied to both control levers, it is a sign that something is not functioning properly in the tilt cylinder circuit. The hydraulic lines may be restricted or damaged. The tilt cylinder assembly may mot be functioning properly or the tilt spool within the control valve body may be restricted or damaged.

LIFT SPOOL END CAP WITH RETAINED RAISE POSITION

On Case Loaders equipped with the lift spool end cap containing a retained raise as well as a retained float position, the operator can move the lift control lever fully rearward until the snap ring in the detent block locks in the raise detent in the lift spool end cap. See Inset. The Loader lift arms will raise until relief valve pressure is reached or until the lift control lever is manually moved from the valve pressure is reached or until the lift control lever is manually moved from the retained raise position. As the lift arms raise in the retained raise position, the Operator need only work the tilt control lever to obtain the crowding action.

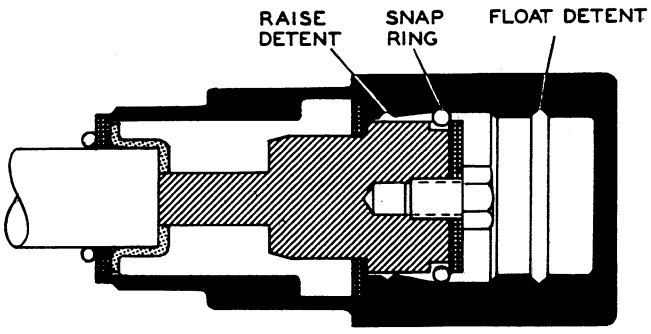

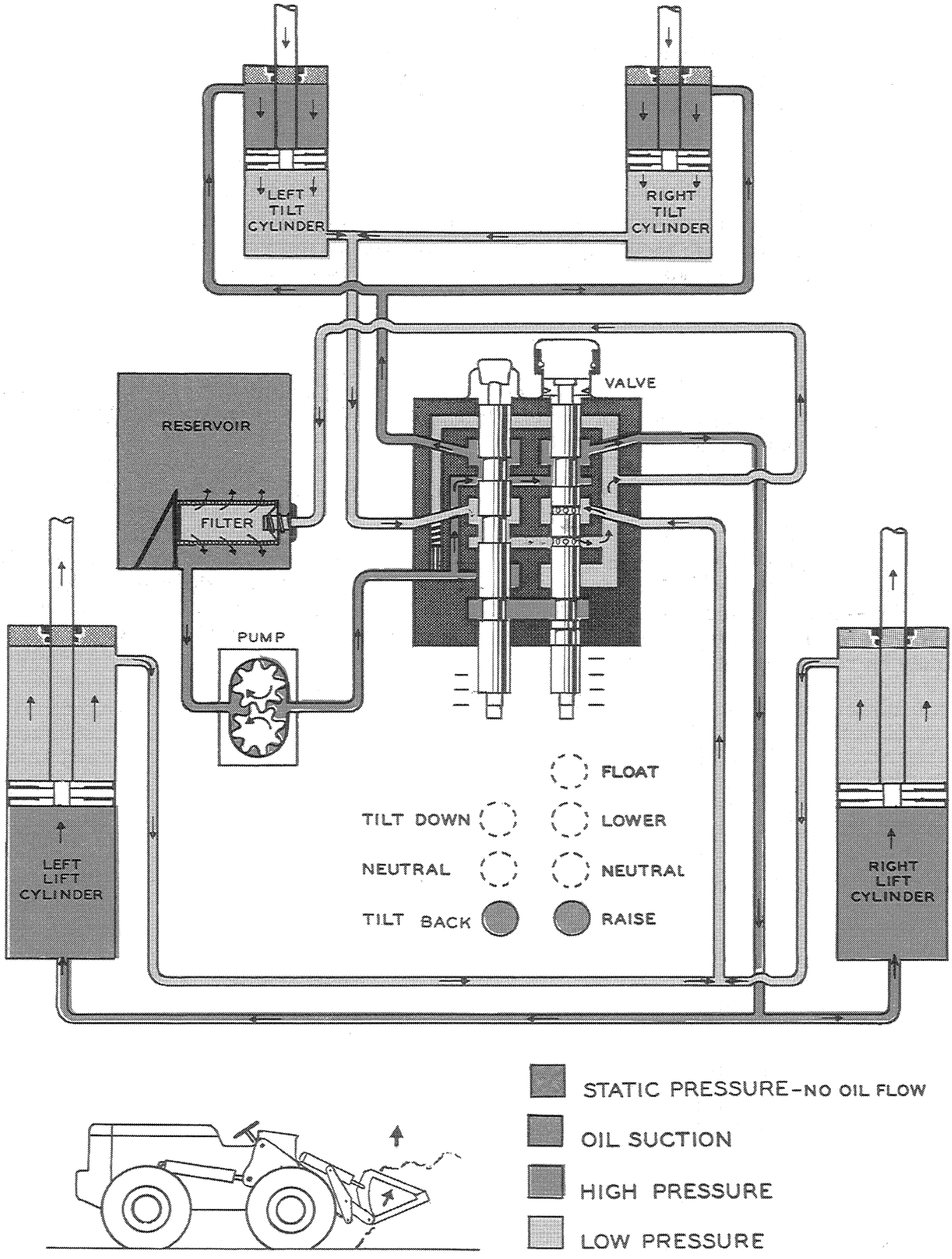
LEFT TILT CYLINDER
RIGHT TILT CYLINDER
VALVE
RESERVOIR
FILTER
PUMP
LEFT LIFT CYLINDER
RIGHT LIFT CYLINDER
FLOAT
TILT DOWN
LOWER
NEUTRAL
NEUTRAL
TILT BACK
RAISE
STATIC PRESSURE-NO OIL FLOW
OIL SUCTION
HIGH PRESSURE
LOW PRESSURE

Figure A-2

TILT LEVER IN THE TILT DOWN POSITION LIFT LEVER IN THE LOWER POSITION

The Loader operator can move both the tilt and lift control levers forward at the same time causing the bucket to tilt down and lower simultaneously. This dual action of the bucket and the lift arms can be used for back dragging and compacting.

Since more force is required to lower the lift arms than is needed to tilt the bucket down and since the return oil from the lift cylinders is more restricted in the control valve than the return oil from the tilt cylinders, the Loader bucket will always tilt faster than it will lower.

In some operations, it may be advantageous to have the lift arms lower more rapidly than the bucket tilts. This can be accomplished by "inching" the tilt control lever while full manual pressure of the same hand is applied to the lift control lever.

If the tilt reaction of the bucket is not faster than the lift reaction, when equal, sustained, manual pressure is applied to both control levers, it is a sign that something is not functioning properly in the tilt cylinder circuit. The hydraulic lines may be restricted or damaged. The tilt cylinder assembly may not be functioning properly or the tilt spool within the control valve body may be restricted or damaged.

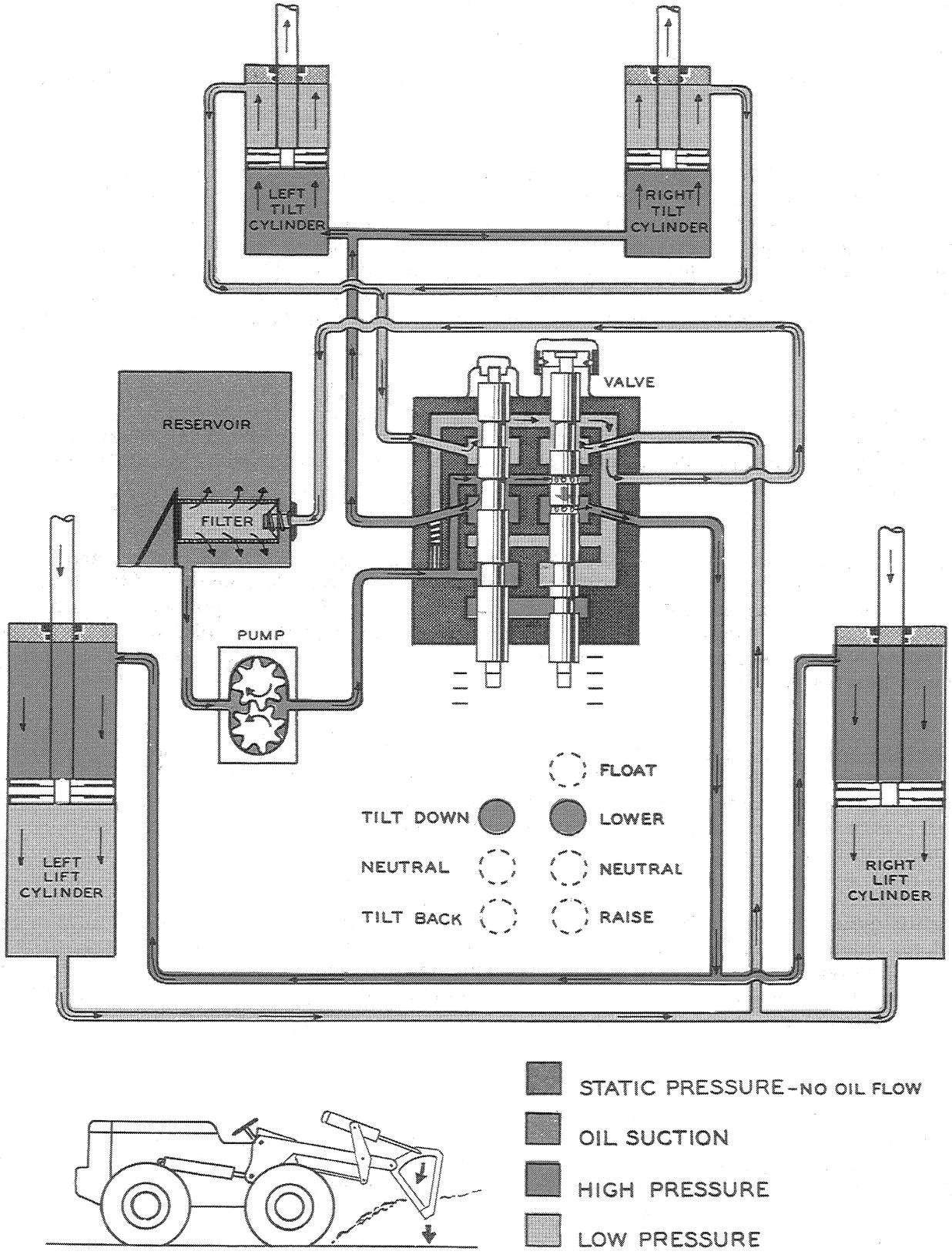
LEFT TILT CYLINDER
RIGHT TILT CYLINDER
VALVE
RESERVOIR
FILTER
PUMP
LEFT LIFT CYLINDER
RIGHT LIFT CYLINDER
FLOAT
TILT DOWN
LOWER
NEUTRAL
NEUTRAL
TILT BACK
RAISE
STATIC PRESSURE-NO OIL FLOW
OIL SUCTION
HIGH PRESSURE
LOW PRESSURE

Figure A-3

FUNCTION OF DROP CHECK VALVES

The function of the drop check valves, is to prevent hydraulic oil from flowing back to the pump as the spools are moved from or through, the neutral position. Two drop check valves (one for each spool) are contained in the hydraulic control valve of the Case Loader. Figure A-4 illustrates the drop check valve for the lift cylinder circuit of the Loader hydraulic system.

As the lift control lever is moved from neutral to any powering position, both lift cylinder valve ports are opened. The hydraulic oil locked in the lift cylinder circuit would normally tend to flow back through the control valve passage leading to the pump, before the pump could sipply pressurized oil to activate the lift cylinders. The drp check valves maintain the static pressure in the lift cylinder circuit by blocking off the valve passage leading to the pump. Therefore the hydraulic oil locked in the lift cylinder circuit by the spool remains locked in the circuit by the drop check valve, when the spool is moving from neutral to a powering position.

Wehn the lift control lever and the spool are fully in the powering position, the pressurized oil supplied by the pump enters the control valve and forces the drop check valve off its seat, opening the valve passage. The pressurized hydraulic oil then flows into the lift cylinder circuit to activate the lift cylinders.

Figure A-4 illustrates the lift spool instant it begins to move from nuetral and before it reaches a powering position. The lift spool has only been moved about 1/4 of its travel from neutral to the powering position and the drop check valve is maintaining static pressure in the lift cylinder circuit. The pump is just beginning to supply pressurized oil. The circulating oil in the pump - to - reservoir circuit, has not yet ceased to flow and the return oil from the tilt cylinders has not yet begun to flow.

When the lift control lever is released and the lift spool returns to the neutral position, within the control valve body, or when the lift control lever and spool are moved through the neutral position to another powering position, the drop check valve seats again and blocks the control valve passage leading to the pump, preventing hydraulic oil from backing up in the system.

The tilt cylinder circuit drop check valve operates exactly the same as the lift cylinder circuit drop check valve. Pressurized oil in the control valve unseats the drop check, opens the control valve body passage and flows into the tilt cylinder circuit, activating the tilt cylinders. When the flow of pressurized oil is stopped, the spring loaded drop check seats and blocks the valve body passage, preventing hydraulic oil in the tilt cylinder circuit from flowing back to the pump.

When the drop check valves are functioning properly, the Loader lift arms will lower only when the lift spool is fully in the lower position, and the bucket will tilt only when the tilt spool is fully in a powering position. There will be no sudden, uncontrolled dropping of the lift arms or tilting of the bucket when the control levers are moved from neutral to a powering position, or through neutral from one powering position to another powering position.

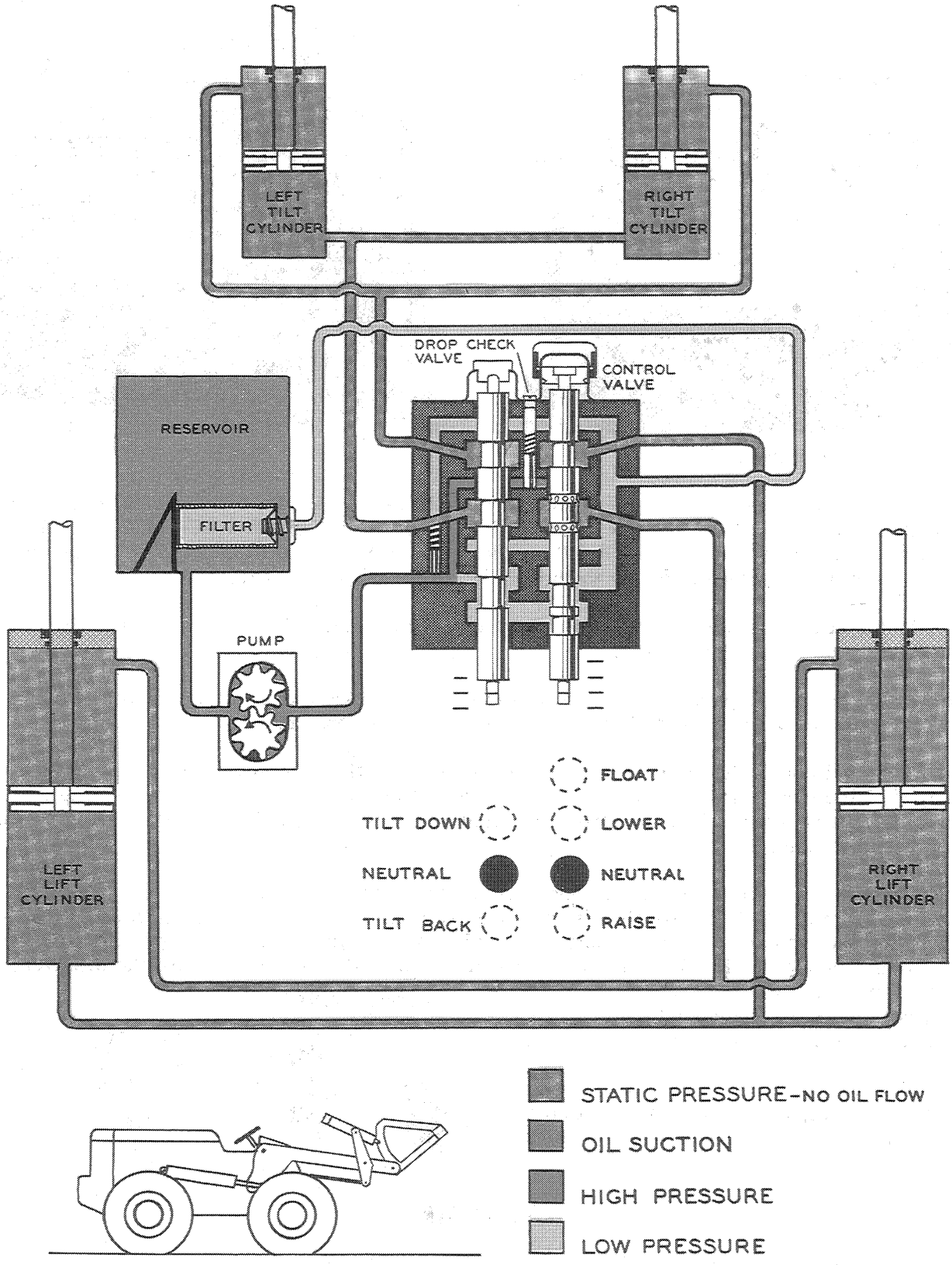
LEFT TILT CYLINDER
RIGHT TILT CYLINDER
DROP CHECK VALVE
CONTROL VALVE
RESERVOIR
FILTER
PUMP
LEFT LIFT CYLINDER
RIGHT LIFT CYLINDER
FLOAT
TILT DOWN
LOWER
NEUTRAL
NEUTRAL
TILT BACK
RAISE
STATIC PRESSURE-NO OIL FLOW
OIL SUCTION
HIGH PRESSURE
LOW PRESSURE

Figure A-4

SERVICING THE HYDRAULIC SYSTEM

Capacity ---------- 14 Gallons
Oil Recommendations ---------- SAE 10W Automatic Transmission Fluid Type A

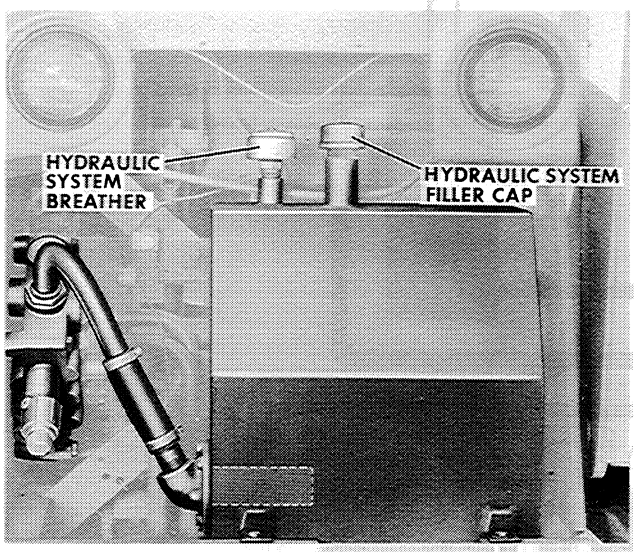

Figure A-5

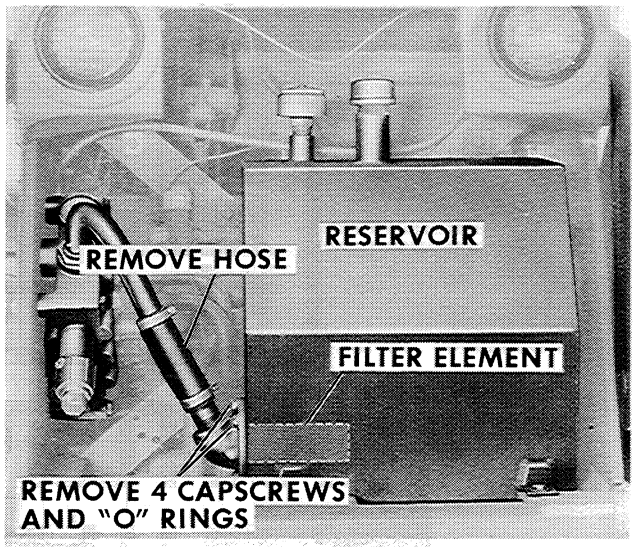

Figure A-6

Check the oil level in the hydraulic reservoir every 60 hours with the dipstick located in the filler cap, Figure A-5. The dipstick is marked "FULL" AND "LOW". When the oil in the hydraulic reservoir falls below the "Full" mark on the dipstick, add enough SAE 10 oil through the filler opening to bring the oil up to the "Full" mark on the dipstick.

Be sure the lift arms are fully lowered to force all hydraulic oil out of the lift cylinders before checking reservoir fluid level.

Every 1000 hours of operation, or once a season, whichever occurs first, drain the hydraulic reservoir. A drain plug is located on the bottom of the reservoir.

Remove and check the edge wound filter element each time the hydraulic oil in the reservoir is changed. Disconnect the hydraulic line and remove the four capscrews shown in Figure A-6. to check the filter element. Wash the filter element in a greaseless cleaning fluid such as might be used for removing spots from clothing.

Flush out the hydraulic reservoir and replace the filter element, four capscrews and hydraulic line, Figure A-6. Refill the hydraulic reservoir with 9 measured gallons of SAE 10W oil. Operate the control levers through several complete lifting and tilting cycles then add 6 measured gallons of SAE 10W oil. Check the oil level in the reservoir with the dipstick.

Every 5 to 60 hours, depending on dust conditions, remove the edge wound paper filter element in the hydraulic reservoir breather.

Wash the element in a greaseless cleaning fluid such as might be used for removing spots from clothing.

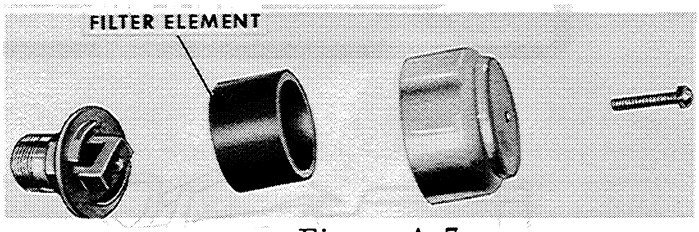

Figure A-7

IMPORTANT

Failure to keep the filter element clean will restrict the breathing or the hydraulic housing and will result in oil being forced past the seals by the pressure build up.

HYDRAULIC SYSTEM PRESSURE CHECK AND ADJUSTMENT

The Pressure Relief Valve used in the VDP-14 Hydraulic Control Valve is adjustable so as the right pressure setting can be obtained. After the control valve assembly has been serviced and reinstalled on the Loaders, it must be adjusted to the right pressure setting.

To install the pressure gauge for check the Loader hydraulic system proceed as follows:

1. Rest the Loader bucket flat on the ground or floor.

2. Shut off the engine and relieve the hydraulic pressure in the lines by working the control levers back and forth several times, Figure A-8.

3. Remove the pipe plug from the control valve as shown in Figure A-8 and install either the 4501AA or the A22791 Pressure Gauge.

4. Start the engine and run it at approximately 1000 RPM. Slowly pull the tilt control lever rearward until the bucket is tilted all the way back and the pressure relief valve is forced open.

5. Continue holding the tilt control lever rearward and gradually increase the engine speed to 1500 RPM.

6. Observe the pressure gauge reading. If the pressure gauge registers above or below the right pressure setting, the pressure relief valve must be adjusted.

7. To adjust the pressure relief valve, remove the acorn nut and loosen the lock nut. Turn the adjusting screw in or out to obtain the right pressure setting.

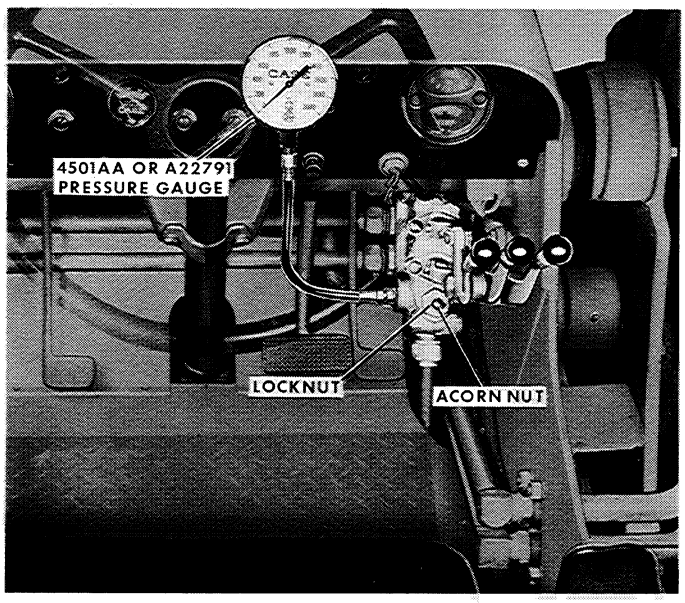

Figure A-8

8. After the right pressure relief valve setting is obtained, rest the Loader bucket flat on the ground or floor and shut off the engine.

9. Relieve hydraulic pressure in the system by working both control levers back and forth several times.

10. Remove the pressure gauge and install the pipe plug.

11. Start the engine, bleed the hydraulic system by working both the lift and tilt control levers through several full raising and lowering cycles, and through several full tilt up and tilt down cycle. Check the oil level in the hydraulic reservoir and add oil if necessary.

RELIEF VALVE PRESSURE SETTING

Refer to Hydraulic System Pressure Check Sheet of Group iV Hydraulic System.

REMOVAL OF THE LIFT CYLINDERS FROM THE LOADER

1. Rest the Loader bucket flat on the ground or floor.

2. Turn off the Loader engine and work both the lift control lever and the tilt control lever fully forward and fully to the rear several times to relieve hydraulic pressure in the cylinders and hydraulic lines.

3. Disconnect the hydraulic lines from the lift cylinder head ports, Figure A-9. Drain the hydraulic oil from the lift cylinder and hydraulic lines into a clean container.

4. Cap the hydraulic lines and the ports in the lift cylinder head immediately to prevent the entry of dirt or foreign material in the Loader hydraulic system.

CAUTION Block or support the lift cylinder sufficiently during removal to prevent the cylinder from dropping and causing serious injury or damage when the pivot pins are removed.

5. Remove the capscrew and the pivot pin lock from the front pivot pin, Figure A-9.

6. Using a roll bar and pry bar, remove the front pivot pin, as shown in Figure A-9.

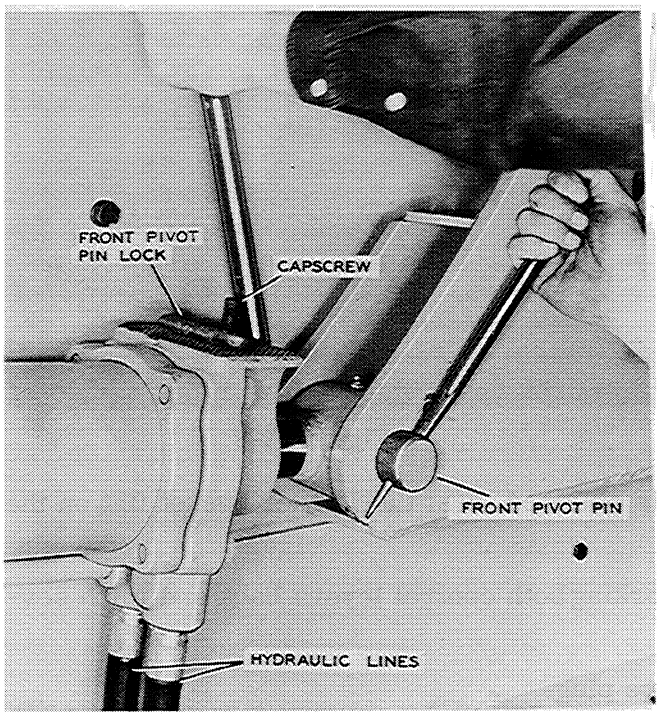

Figure A-9

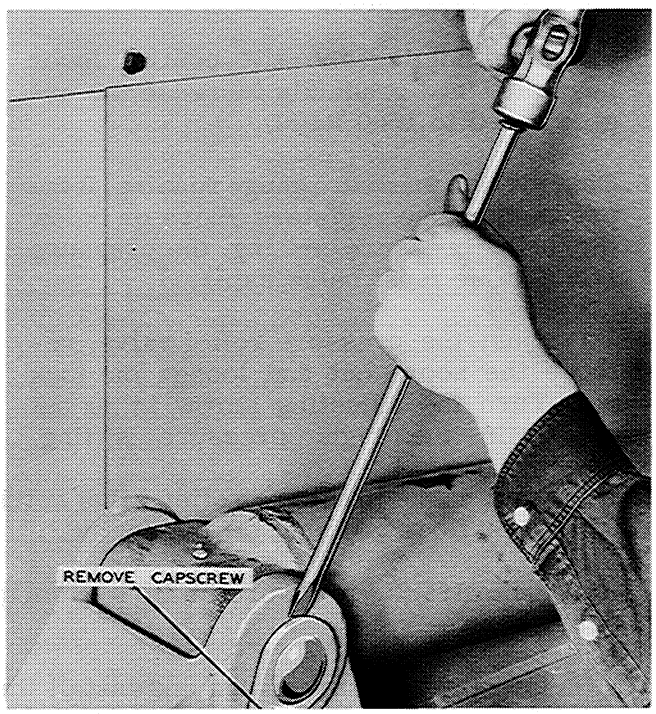

Figure A-10

7. Remove the capscrew from the lift cylinder rear pivot pin lock plate and drive a tool similar to the one shown in Figure A-10 between the rear pivot pin lock plate and the pivot yoke to free the pivot pin for removal.

8. After the rear pivot pin is started out, it can be removed completely by prying the lock plate on the pivot pin with a roll bar or pry bar.

INSTALLATION OF LIFT CYLINDERS

1. Place the rear of the lift cylinder in the pivot yoke as shown in Figure A-11. ***NOTE*** The grease fitting must be pointed up, Figure A-11. The step plate on the lift cylinder head will then also be on top. Refer to Figure A-12.

2. Install the pivot pin. Drive the pivot pin through the yoke and lift cylinder pivot until the locking plate on the pivot pin is flush with the surface of the yoke. Refer to Figure A-11.

3. Align the hole in the pivot pin locking plate with the hole in the yoke and lock the pivot pin in place with the capscrew, as shown in Figure A-11.

4. Align the linking end of the piston rod with the holes in the lift arm pivot and install the pivot pin, Figure A-12. Be sure the grease fitting in the piston rod link is on top.

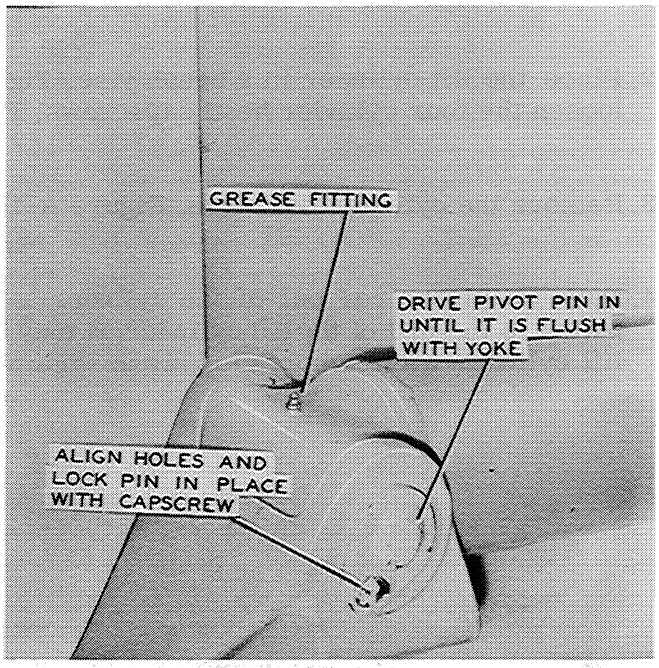

Figure A-11

5. Insert the pivot pin lock through the pin and secure it with the capscrews, Figure A-12.

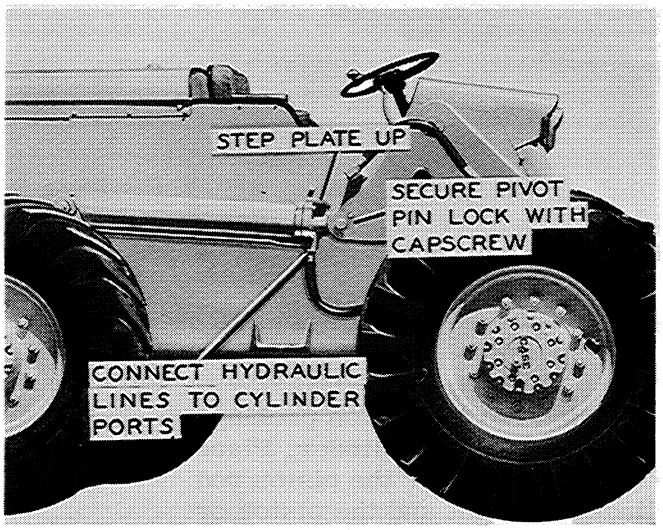

Figure A-12

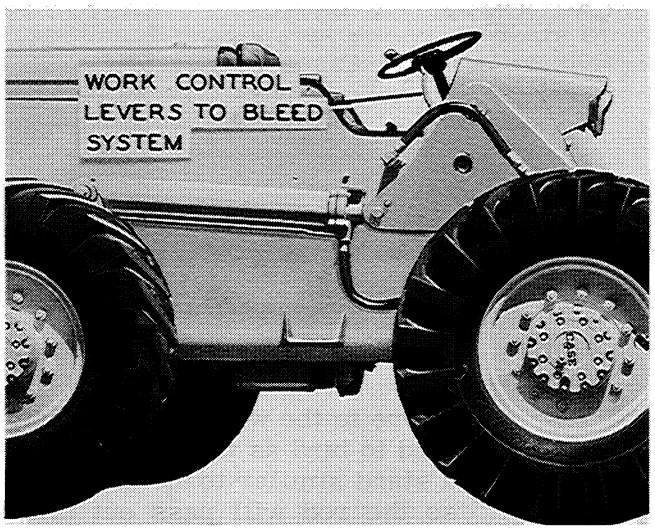

Figure A-13

6. Uncap the hydraulic ports and lines and connect the lines to the lift cylinder ports, Figure A-12.

7. Start the Loader engine and bleed all air from the hydraulic system by working both bucket control levers through several full raising and lowering cycles and several full tilt up and down cycles, Figure A-13. Check the oil level in the hydraulic reservoir, Page 12 and add oil if necessary.

DISASSEMBLY OF LIFT CYLINDERS

1. Remove the lift cylinders from the Loader as described on Page A-14.

2. Place the lift cylinder in a bench vise. Tighten the vise just enough to hold the cylinder and loosen the four cylinder head capscrews, Figure A-14.

3. Remove the cylinder port tube, Figure A-14.

4. Pull the piston rod out of the cylinder as far as possible. If the piston cannot be manually pulled to the end of the lift cylinder, it may be necessary to force the piston to the end of the lift cylinder with compressed air as shown in Figure A-14.

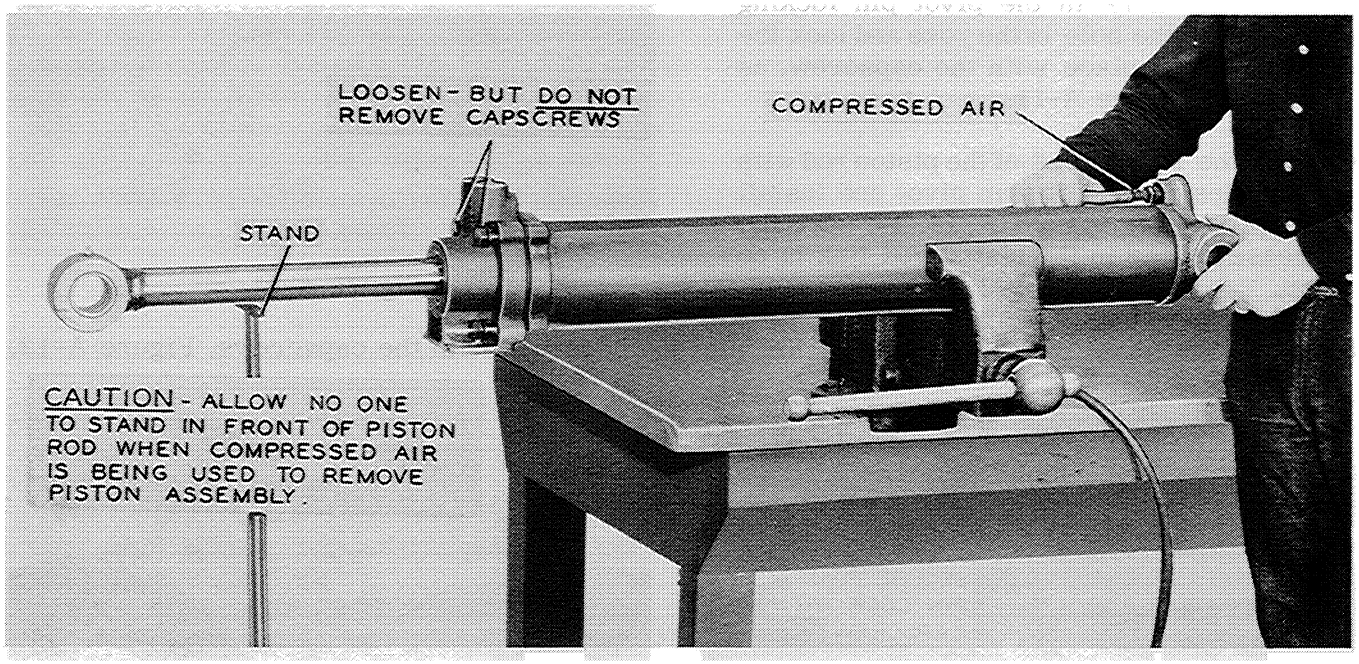

Figure A-14

CAUTION

Due to the weight of the piston and piston rod the piston packings tend to bind as the piston is forced farther out of the cylinder. Place a stand similar to the one shown in Figure A-14 under the piston rod so the rod will pass out of the cylinder straight and the piston or piston packings will not bind. Allow no one to stand in front of the piston rod while compressed air is being used. Extreme air pressure is built up in the small space of the cylinder in a relatively short time, which will ram the piston forward with considerable force.

5. When the piston and rod are out to the end of the cylinder, remove the four head capscrews and take the piston and rod assembly out of the cylinder barrel.

6. Place the piston rod link, Figure A-15, in a bench vise and support the piston rod securely near the piston end.

7. Remove the self locking nut, Figure A-15.

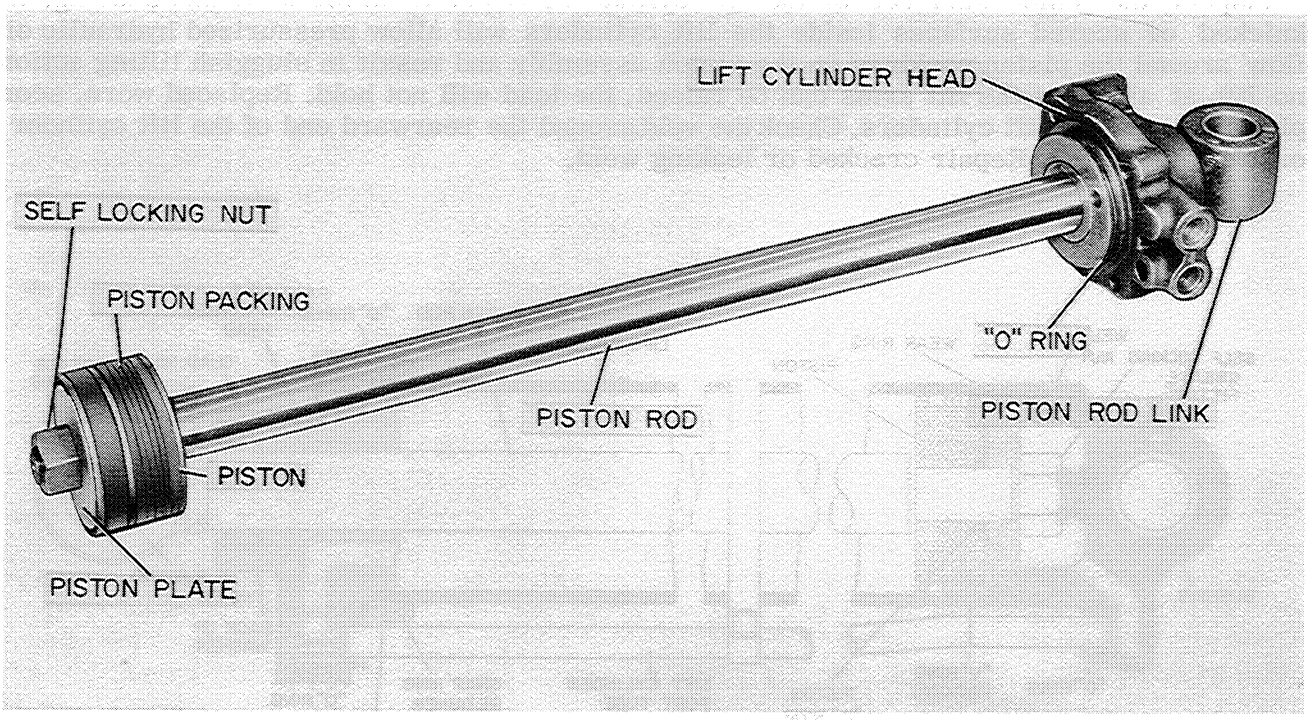

Figure A-15

8. Slide the piston plates, piston packing and piston off the piston rod.

9. Slide the lift cylinder head off the piston rod. Take care not to damage the wiper, "quad" ring or back up washer when removing the lift cylinder head from the piston rod, Figure A-16.

NOTE

Clean the Loader Lift Cylinder thoroughly before inspecting the component parts.

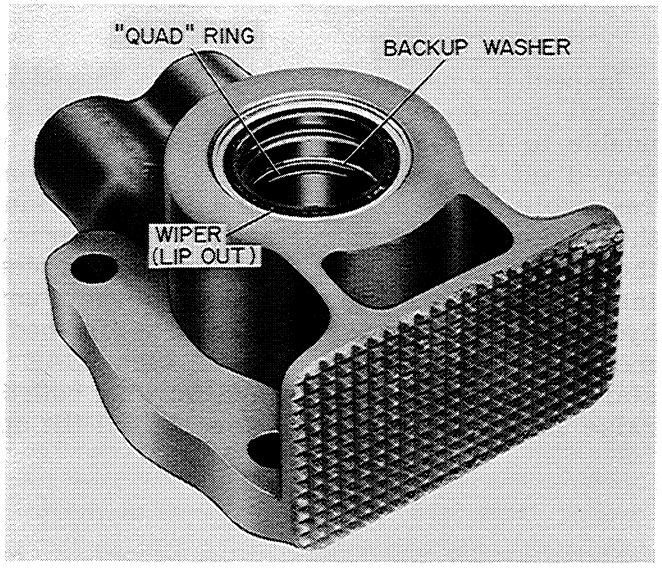

Figure A-16

INSPECTION

The procedure for inspection of the Loader Lift Cylinders is the same for All Case 4 Wheel Drive Unit Loaders. Whenever the Loader lift cylinders are disassembled for servicing, inspect the component parts and replace any that are found to be worn or damaged. These drawings show the lift cylinder completely assembled and illustrates the location of the parts contained within the lift cylinder assemblies.

Inspect the inside surfaces of the lift cylinders. Check them for wear and scoring. Worn knicked or scored surfaces inside the lift cylinders will allow pressurized hydraulic oil to flow around the piston packings on the piston assembly and result in sluggish lifting action or no lift at all, or if the lift arms can be raised, the load will not hold. Replaced worn, scored, pitted or scarred lift cylinders. Check the weld around the rearward end of the lift cylinder for cracks or leakage. Repair cracked or leaking weld.

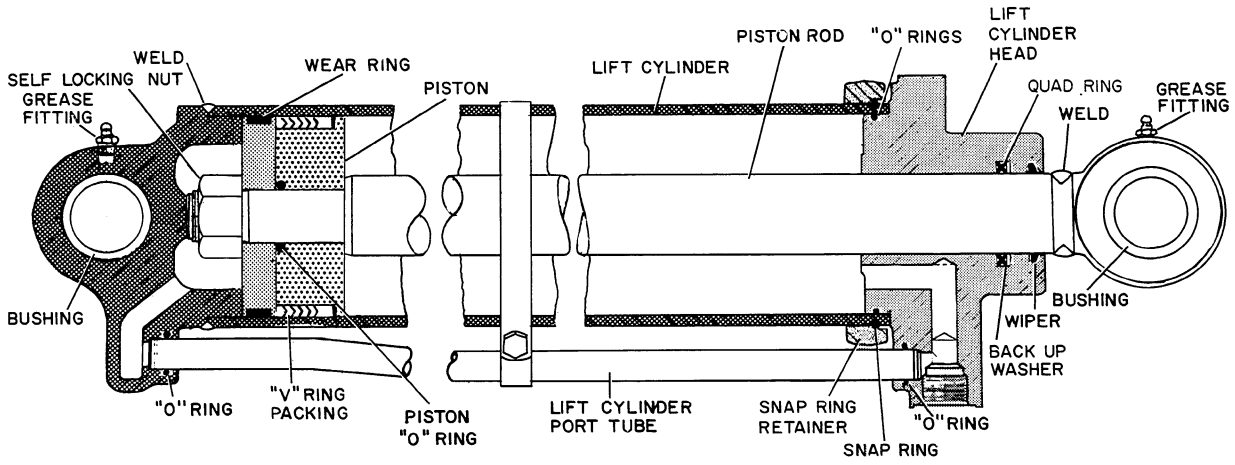

Figure A-17

Inspect the piston assembly. Worn, frayed or damaged piston packings will aloow the hydraulic oil to seep or flow from one side of the piston to the other resulting in the lift arms being unable to lift or hold up a load or in very sluggish lift arm action. Packing material worn or frayed off the piston packings will contaminate the hydraulic system and plug the filter in the reservoir. If worn, frayed or damaged packings are found they must be replaced and the filter thoroughly cleaned or replaced. If the filter is completely plugged, hydraulic oil returning from the control valve forces the filter retainer plate away from the filter cover and allows contaminated hydraulic oil to enter the reservoir unfiltered. If this condition is suspected, the entire hydraulic system must be drained and flushed out with clean SAE 10 oil. Replace the filter element, refill the reservoir with clean SAE 10 oil. Bleed the hydraulic system thoroughly by starting the Loader engine and working both the lift and tilt control levers through several full raise and lower cycles and several full tilt up and tilt down cycles.

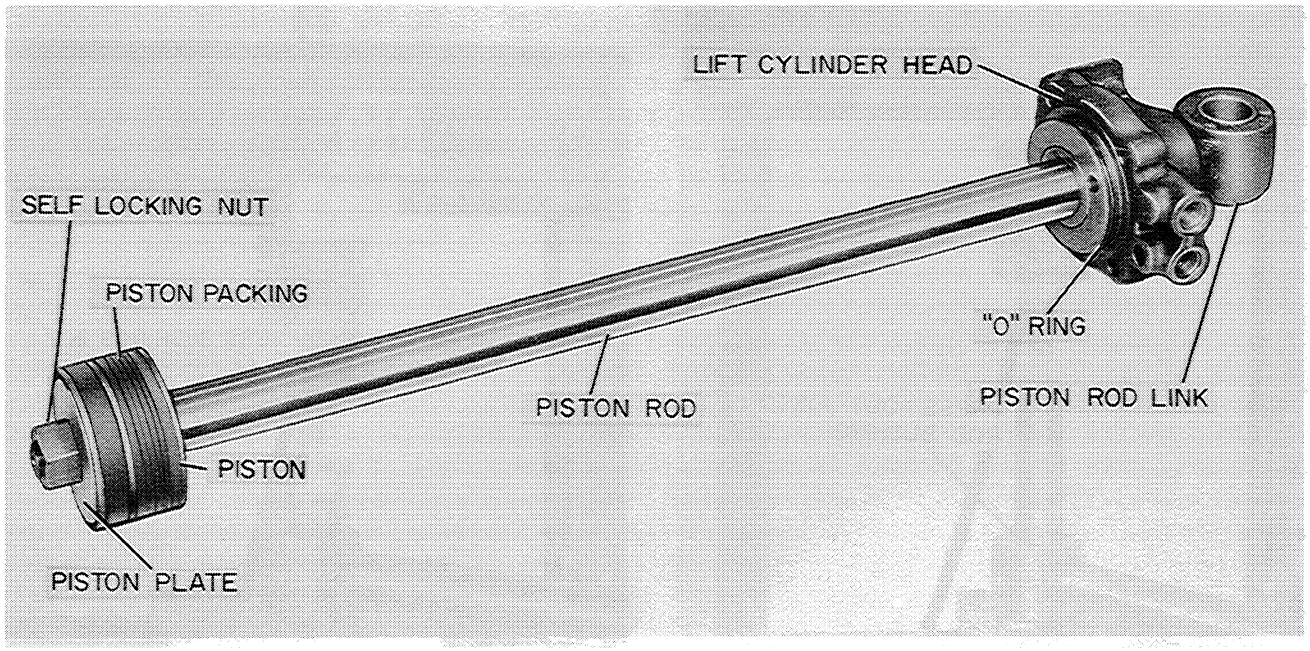

Figure A-18

Check the piston plates and pistons for wear, scoring and knicks. Replace any parts that are worn, scored or knicked.

Check the piston rod for knicks or burrs that may damage the lift cylinder head wiper.

Inspect the piston rod to be sure it is not bent by placing the rod on a known flat surface and rotating it several times in both directions. Piston rods can also be checked by placing them on two V-blocks and checking them with a dial indicator. Observe the entire piston rod length for bends or knicks. Refer to Figure A-18. Replace piston rods that are bent or have irregularities anywhere along their lengths. Do not attempt to straighten bent piston rods.

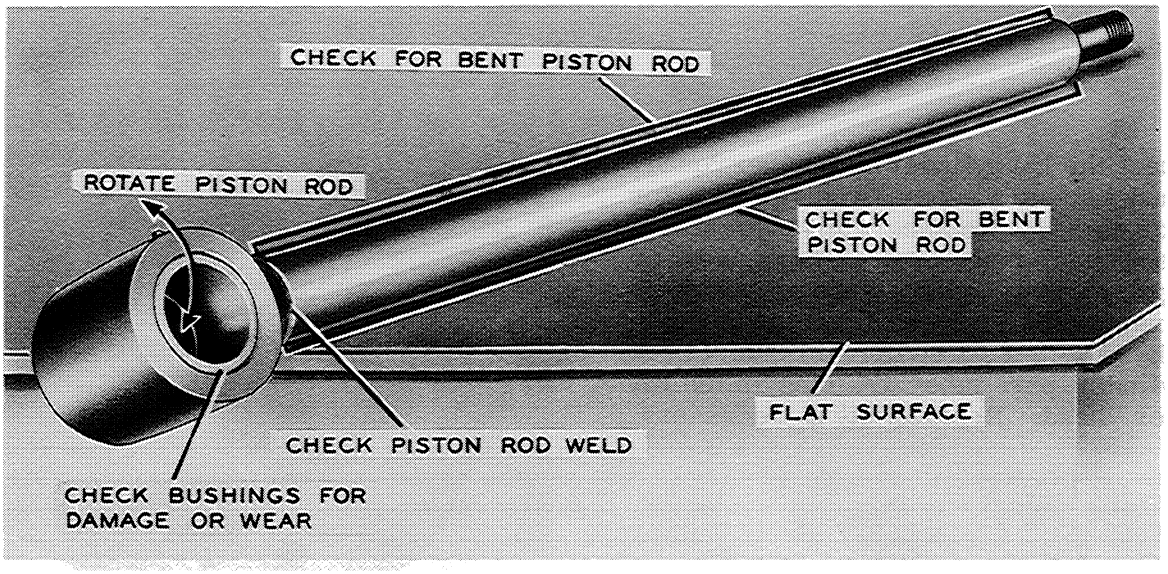

Figure A-19

Check the weld at the linking end of the piston rod for cracks. Inspect the piston rod bushings for excessive wear. Repair piston rod weld cracks or replace the piston rod. Replace worn or damaged piston rod bushings. Refer to Figure A-20 and A-21.

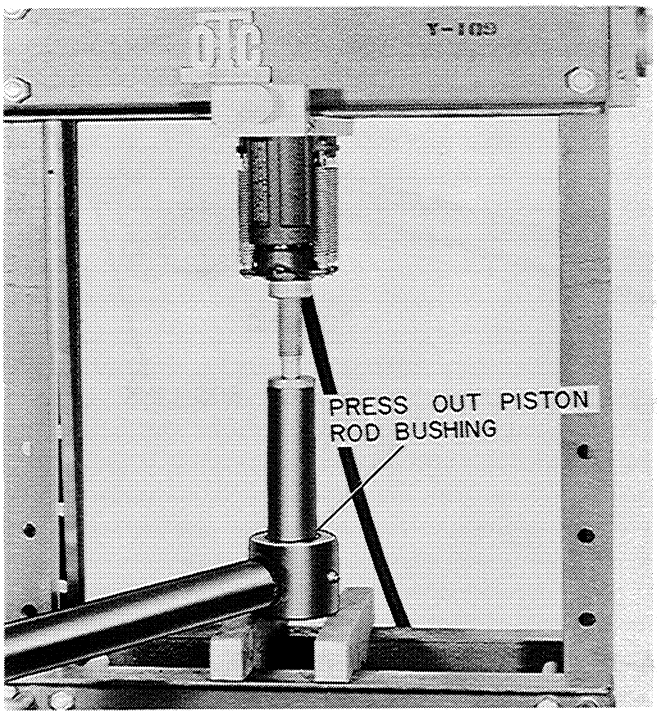

Figure A-20

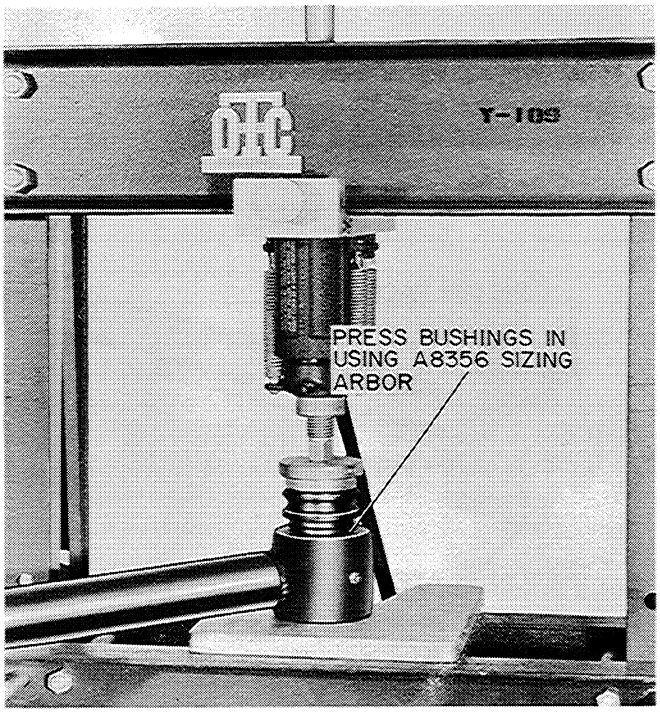

Figure A-21

NOTE

Both bushings can be pressed out straight through the piston rod link. Press new bushings into the piston rod link using the A-8356 Arbor from Case A-8358 Special Service Tool Kit. Refer to Figure A-22.

Inspect the lift cylinder head wiper "quad" ring and backup washer, Figure A-22, for wear or damage. Replace worn or damaged wipers, "quad" rings, and washers. Worn or damaged wipers, "quad" rings and back-up washers can be removed from the lift cylinder head with a screw driver blade. Check the cylinder port tube "O" ring in the lift cylinder head. Replace it if necessary.

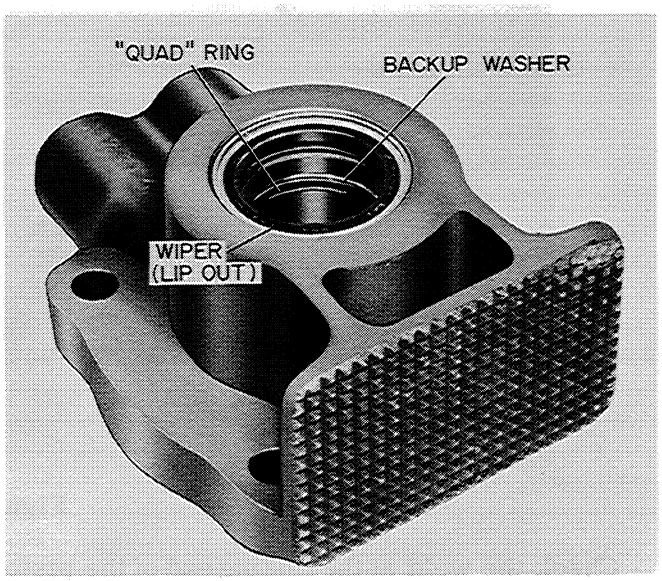

Figure A-22

ASSEMBLY OF LIFT CYLINDERS

1. Be sure all parts have been inspected for wear or damage before reassembly. Replace or repair all worn or damaged parts. Refer to Page A-18.

2. Place the A-13624 thimble, Figure A-23 over the threaded end of the piston rod. The A-13624 thimble prevents the threads on the piston rod from damaging or turning over the lip of the wiper when slipping the piston rod through the lift cylinder head, Figure A-24.

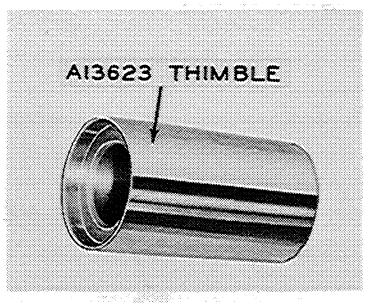

Figure A-23

3. Coat the thimble with vaseline and slide the lift cylinder head to the link-end of the piston rod. Inspect the lip of the wiper to be sure it has not been turned over during installation of the piston rod, Figure A-25.

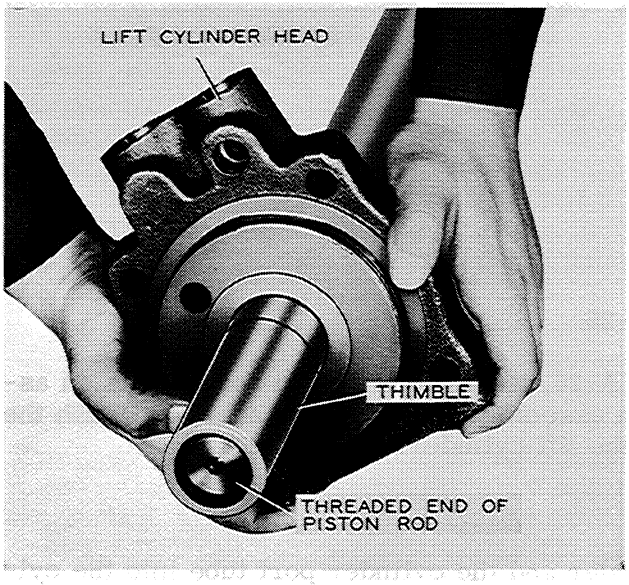

Figure A-24

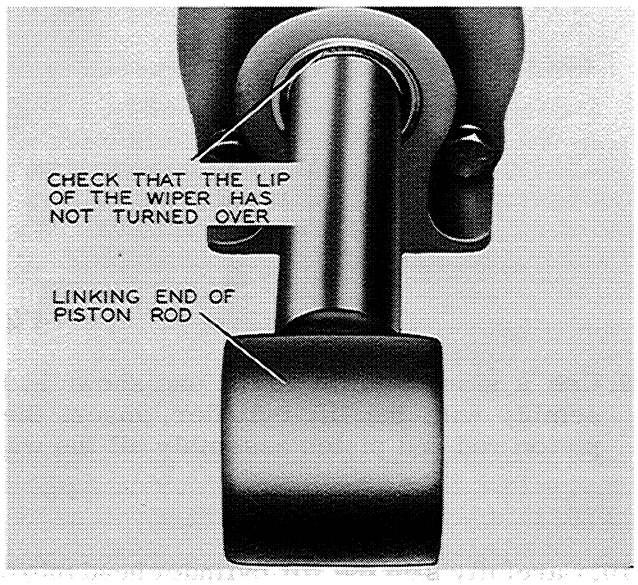

Figure A-25

4. Install the piston assembly on the threaded end of the lift cylinder piston rod. Be sure the chamfered sides of the piston plates are installed correctly.

5. Place the self locking nut on the threaded end of the piston rod and tighten the nut to 300 foot pounds.

6. Place the lift cylinder in a bench vise. Tighten the vise just enough to hold the cylinder and install the snap ring clamp and the snap ring, Figure A-26.

7. Install the "O" rings in the lift cylinder head and rear cylinder port, Figure A-26.

8. Insert the cylinder port tube in the rear cylinder port taking care not to damage the "O" ring, Figure A-26.

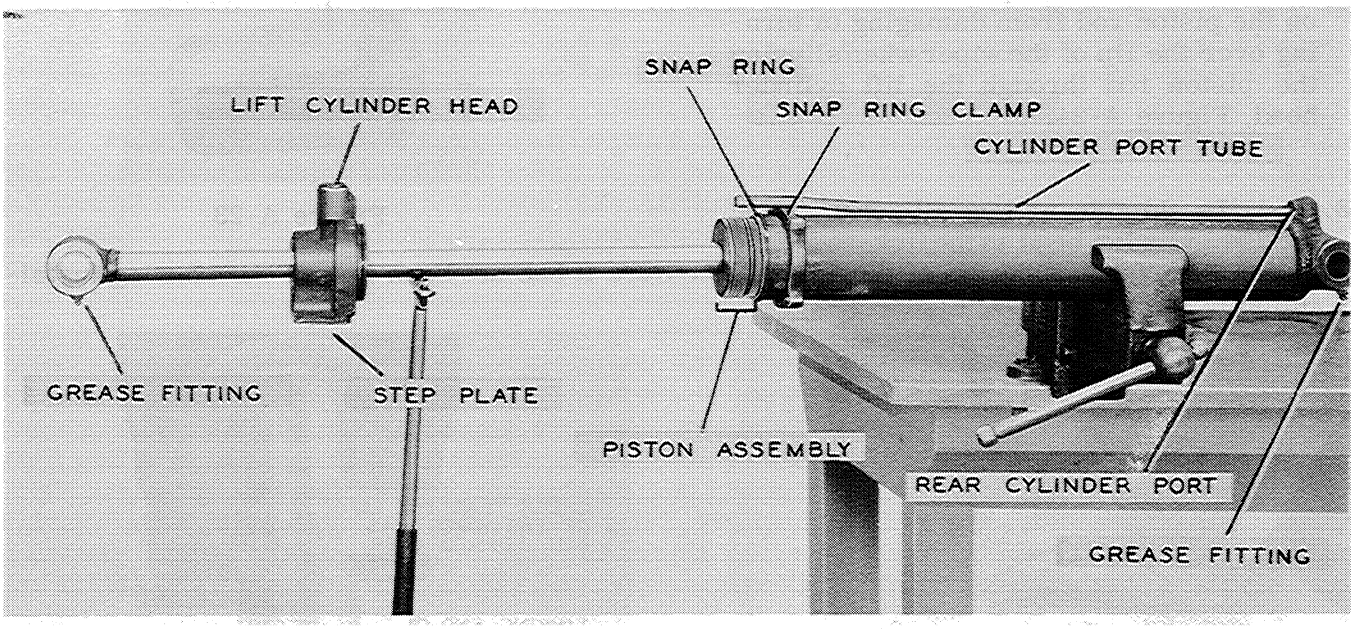

Figure A-26

9. Use a stand similar to the one shown in Figure A-26, to align the piston rod and piston assembly with the lift cylinder, insert the piston assembly in the lift cylinder, and push the piston rod and piston assembly all the way into the lift cylinder.

10. Carefully slip the lift cylinder head into the cylinder and the cylinder port tube into the cylinder head so the "O" rings are not damaged.

11. Install the four cylinder head cap screws and tighten them to 140 foot pounds.

You will note that the lift cylinder grease fitting, the piston rod grease fitting and the step plate are all facing downward when the lift cylinder is assembled as described above. When the lift cylinder is installed on the Loader, the grease fittings and the step plate must face up. Refer to Page A-15.

REMOVAL OF TILT CYLINDERS

1. Rest the Loader bucket flat on the ground or floor and turn off the Loader engine. Relieve hydraulic pressure in both the lift and the tilt cylinders by moving both control levers fully forward and fully rearward several times.

2. Disconnect the hydraulic lines from the tilt cylinder head, Figure A-27. Cap the hydraulic lines and the tilt cylinder head ports immediately to prevent dirt or foreign material from entering the hydraulic system of the Loader.

3. Remove the three capscrews holding the pivot pin locks. (One on the bucket pivot pin lock and two on the bell crank pivot pin locks.) Refer to Figure A-28. Remove the pivot pin locks from the pivot pins.

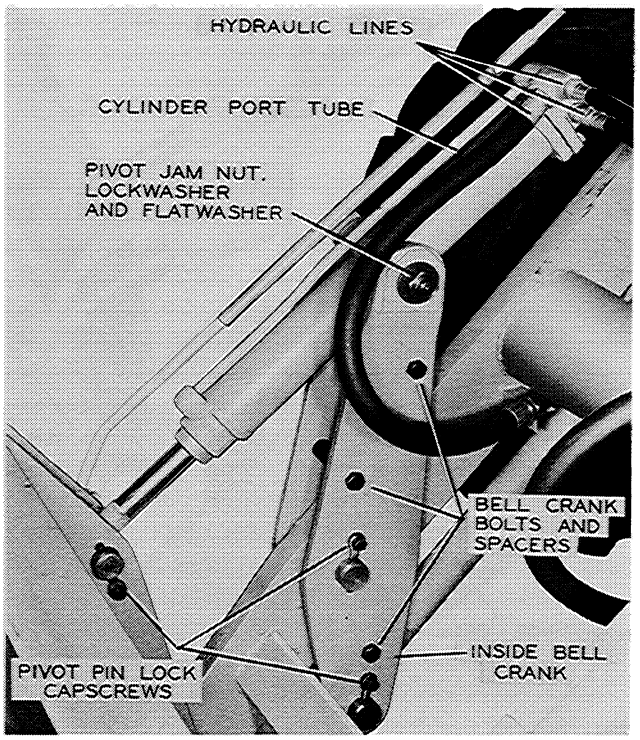

Figure A-27

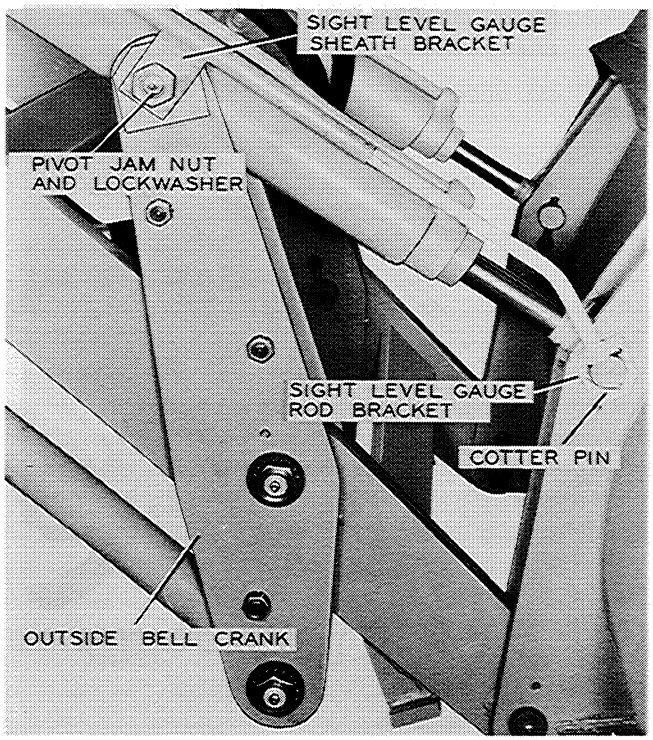

Figure A-28

4. Remove the three bell crank bolts and spacers, as indicated in Figure A-27.

5. Take off the tilt cylinder pivot jam nuts, shakeproof lockwashers and flat washers from both sides of the bell crank, Figure A-27 and A-28. Note: There is only one flat washer on the right hand tilt cylinder pivot. The sight level gauge bracket acts as a spacer and washer on the right hand tilt cylinder pivot. Refer to Figures A-27 and A-28.

6. On the right hand tilt cylinder only, remove the cotter pin that holds the sight level gauge rod bracket to the bucket pivot pin, Figure A-28. There is no cotter pin in the left hand tilt cylinder bucket pivot pin.

7. Drive the bucket pivot pin out.

8. Remove the inside bell crank and slip the tilt cylinder out of the outside bell crank bushings. Refer to Figures A-27 and A-28.

INSTALLATION OF TILT CYLINDERS

1. Place the tilt cylinder pivot into the outside bell crank bushing so the cylinder port tube is on top, Figure A-29.

2. Align the pivot pin holes in both bell cranks and the leveling link then drive the pivot pins in, Figure A-29. Lock the pivot pins in place with the locks and capscrews.

3. Align the pivot pin holes in the bucket with the linking end of the piston rod and install the pivot pin, Figure A-29. Lock the pivot pin in place with the lock and capscrews. Be sure the grease fitting in the piston rod link is on top.

4. Install the bell crank spacers and bolts, Figure A-29.

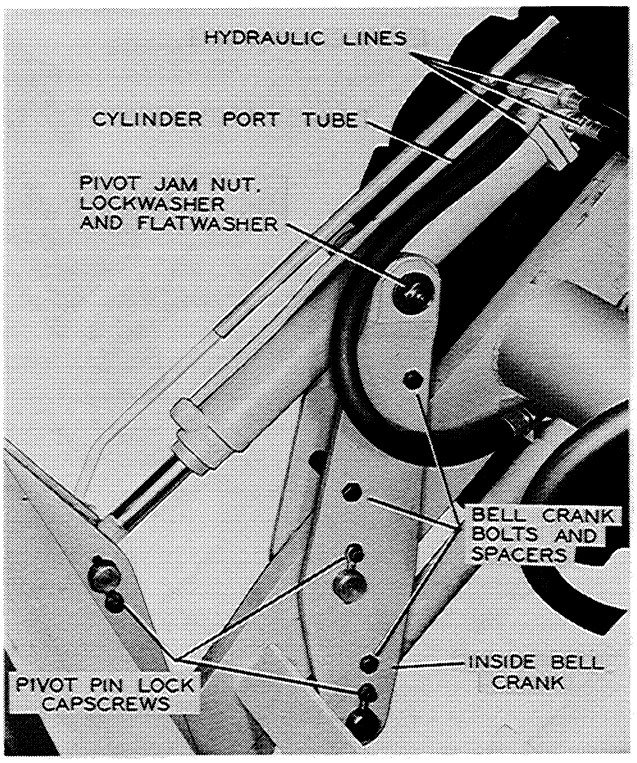

Figure A-29

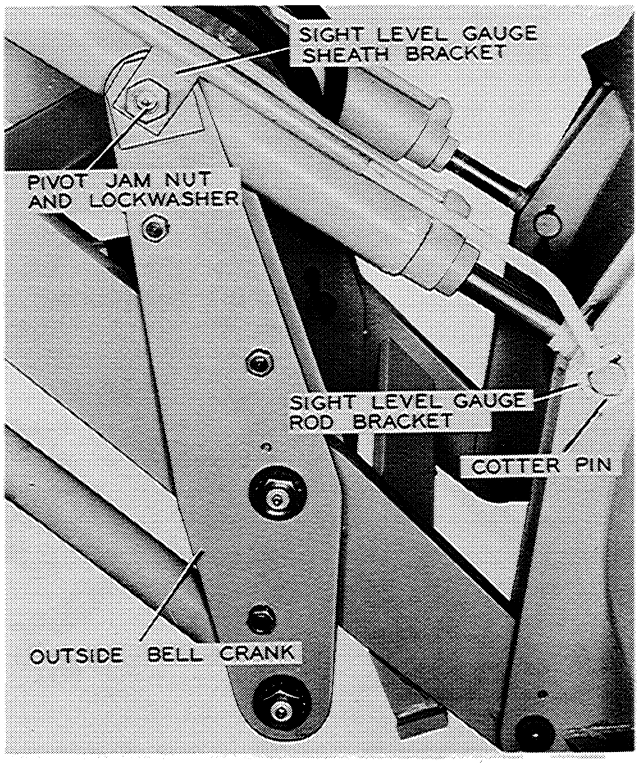

Figure A-30

5. Install the sight level gauge on the right hand tilt cylinder. Connect the rod bracket to the bucket pivot pin with a cotter pin as shown in Figure A-30. Connect the sheath bracket to the tilt cylinder pivot with the shakeproof lockwasher and jam nut.

6. Install the inside flat washer, lockwasher and jam nut on the tilt cylinder pivot. On the left hand tilt cylinder, install one flat washer on each tilt cylinder pivot, then install the lockwashers and jam nuts.

7. Uncap the cylinder ports and the hydraulic lines. Connect the hydraulic lines to the cylinder ports, Figure A-29.

8. Start the Loader Engine and bleed all air from the hydraulic system by working both control levers fully forward and fully rearward several times. Check the oil level in the hydraulic reservoir, Page A-12. and add oil if necessary.

DISASSEMBLY OF TILT CYLINDERS

1. Remove the tilt cylinder from the Loader and clean it thoroughly as described on Page A-23.

2. Place the tilt cylinder in a bench vise, so the cylinder port tube is up, as shown in Figure A-31. Tighten the vise just enough to hold the tilt cylinder and remove the four cylinder head capscrews.

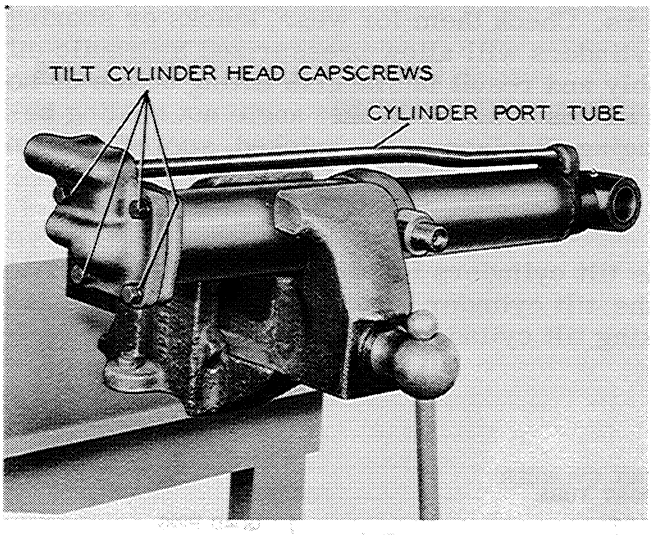

Figure A-31

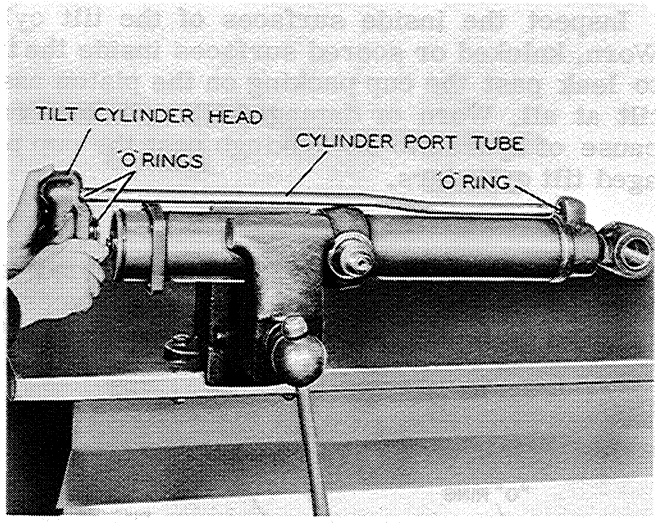

Figure A-32

3. Remove the tilt cylinder head and the cylinder port tube, Figure A-32, taking care not to damage the "O" rings.

4. Remove the Self Locking nut from the end of the piston rod, Figure A-33, and take the piston plates, piston packings and piston out of the cylinder, Figure A-34.

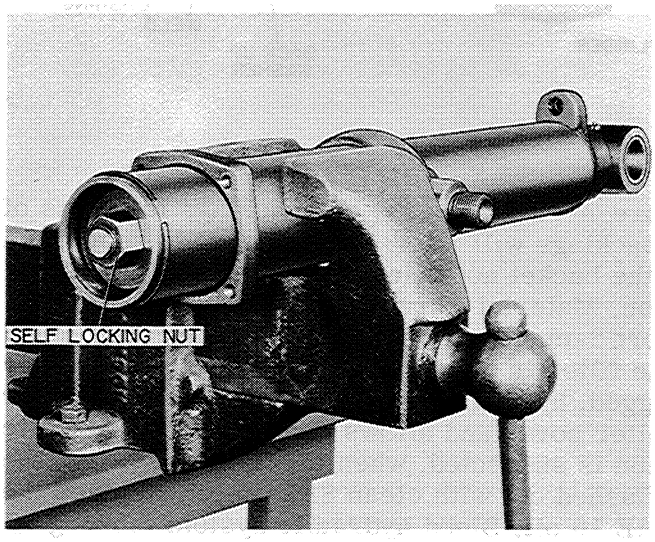

Figure A-33

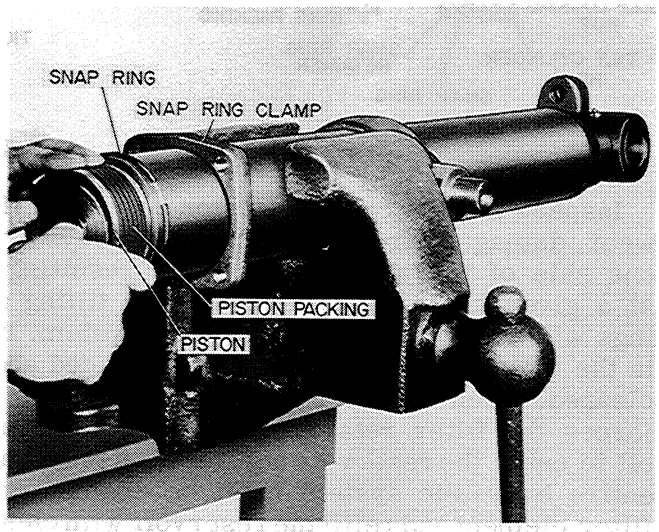

Figure A-34

5. Remove the piston rod from the tilt cylinder and clean it thoroughly.

INSPECTION

The inspection of the Loader Tilt Cylinders is the same on all Case 4 Wheel Drive Unit Loaders. Whenever the Loader Tilt Cylinders are disassembled for servicing, inspect all the component parts. Replace any parts that are found to be worn or damaged, Figure A-35, shows a sectional drawing of the tilt cylinder completely assembled and illustrates the location of the parts contained within the tilt cylinder assemblies.

Inspect the inside surfaces of the tilt cylinders. Check them for wear, knicks or scoring Worn, knicked or scored surfaces inside the tilt cylinders will allow pressurized hydraulic oil to leak past the cup packing on the piston assembly and result in sluggish tilting action or no tilt at all. Worn or damaged tilt cylinders can also result in the bucket angle not holding because of hydraulic oil leakingb past the cup packaging. Replace worn, knicked, scored or damaged tilt cylinders.

Check the weld around the forward end of the tilt cylinders for cracks or leaks. Refer to Figures A-35. Check the outside surfaces of the tilt cylinder for cracks and leaks. Repair cracked or leaking weld. Replace cracked or leaking tilt cylinders.

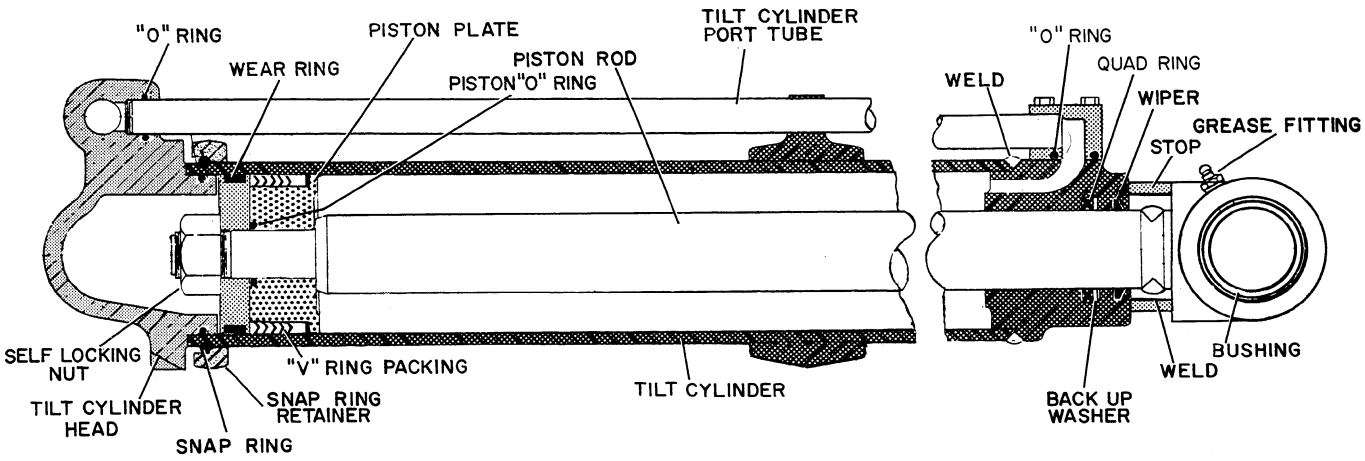

Figure 35

Inspect the tilt cylinder piston assembly, Figure A-35. Check the cup packings for signs of wear, damage or fraying. Worn, cut or frayed cup packings will allow hydraulic oil to seep from one side of the piston to the other resulting in the bucket not being able to tilt or hold a load at a given angle, or in very sluggish tilting action. Material worn or frayed off the cup packings will contaminate the hydraulic system. If worn damaged or frayed cup packings are found in the tilt cylinders they must be replaced and the filter in the hydraulic reservoir thoroughly cleaned. When the filter becomes completely plugged, hydraulic oil returning to the reservoir forces the filter retainer plate away from the filter cover and allows contaminated hydraulic oil to enter the reservoir unfiltered. If this condition is suspected, when checking the filter, the entire hydraulic system must be drained and flushed out with clean SAE 10 oil. Replace the filter element and refill the reservoir with clean SAE 10 oil. Bleed hydraulic system thoroughly.

Check the piston and piston plates for wear, scoring or damage. Refer to Figure A-35. Replace any parts that are worn, scored or damaged, Check the small "O" ring in the piston for wear or damage. Replace the "O" ring if necessary.

Check the piston rod for any knicks or burrs. Knicks or burrs on the piston rod will damage the oil wiper seal in the forward end of the tilt cylinder.

Inspect the piston rod for straightness by placing the rod on a known flat surface and rotating the rod back and forth several times, as shown in Figure A-36. The piston rod may also be placed on two V-blocks and checked with a dial indicator as it is rotated. Observe the entire length of the piston rod for bends or knicks. Replace piston rods that are bent or have any surface **irregularities. Do Not Attempt To Straighten Bent Piston Rods.**

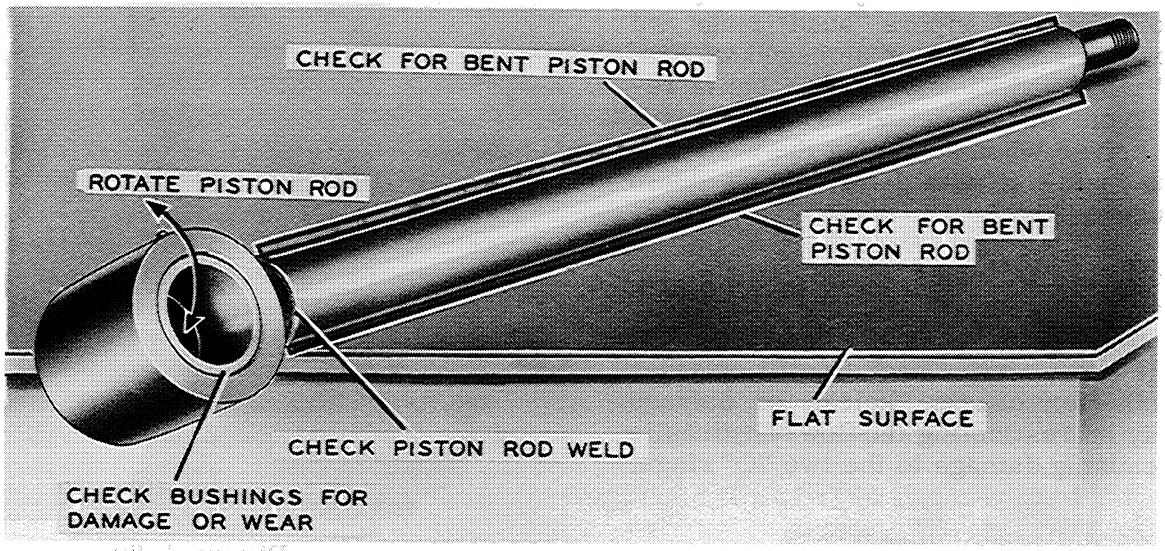

Figure A-36

Check the weld at the linking end of the piston rod for cracks. Inspect the piston rod bushings for wear or damage. Repair piston rod weld cracks. Replace worn or damaged piston rod bushings, Figures A-37 and A-38.

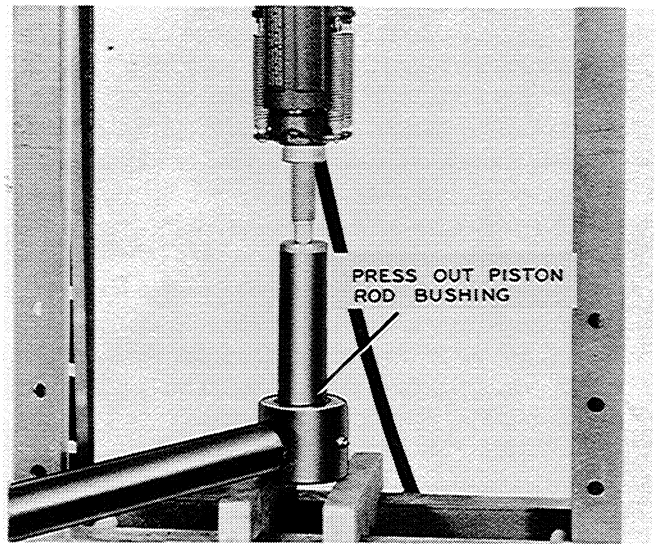

Figure A-37

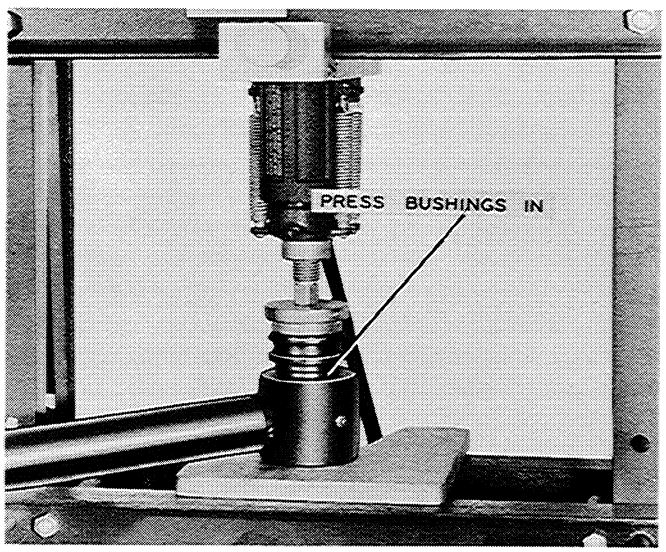

Figure A-38

Both piston rod bushings can be pressed out straight through the piston rod link. Press new bushings in (one from each side) using the A8356 Arbor from the Case A-8358 Special Service Tool Kit, Figure A-38.

Inspect the tilt cylinder wiper, "quad" ring and backup washer for wear or damage, Figure A-39. The wiper, "quad" ring and backup washer prevent hydraulic oil from leaking out of the front of the tilt cylinder. Replace worn or damaged wipers "quad" rings and backup washers. Worn or damaged wipers, "quad" rings and backup washers can be removed from the tilt cylinders with a small screw driver. When replacing the wiper, be sure to install it with the lip out as shown in Figure A-39.

Check the "O" rings at the ends of the cylinder port tube for damage and leaks. Refer to Figure A-39. Replace the "O" rings if necessary. Check the tilt cylinder port tube for cracks, knicks or damage that may be restricting the flow of hydraulic oil or causing damage to the two "O" rings.

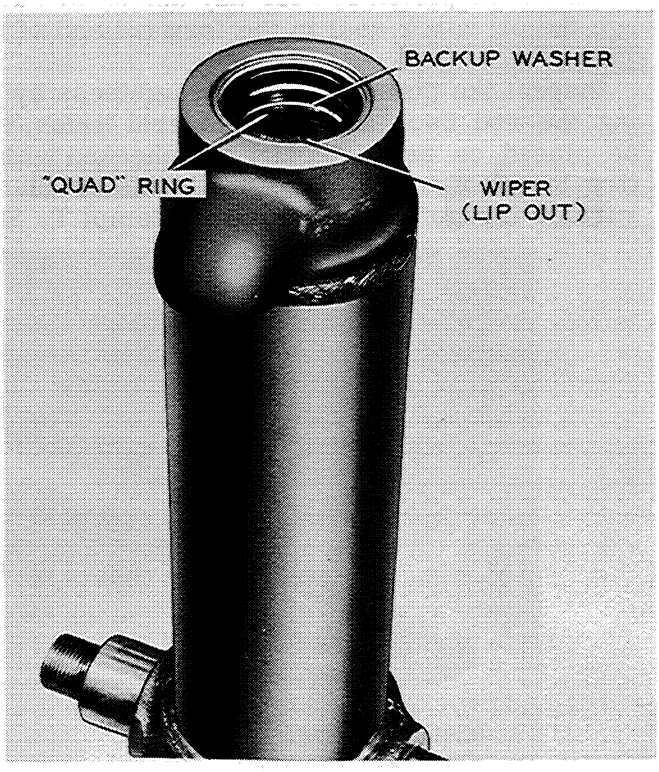

Figure A-39

Check the tilt cylinder head "O" ring for damage or leakage. Replace the "O" ring if necessary.

ASSEMBLY OF TILT CYLINDERS

Before assembling the Loader tilt cylinders, be sure all the component parts have been inspected and that all worn or damaged parts have been repaired or replaced.

1. Place the tilt cylinder in a bench vise and put the A13623 thimble over the threaded end of the piston rod, Figure A-40 and A-41. The A-13623 thimble can be purchased from your Case Branch.

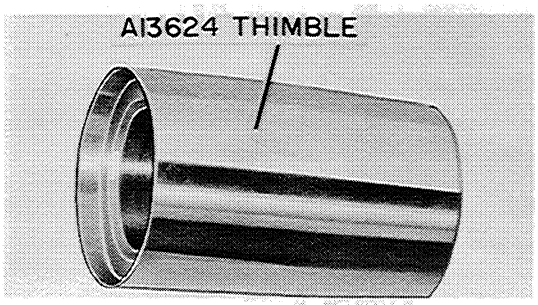

Figure A-40

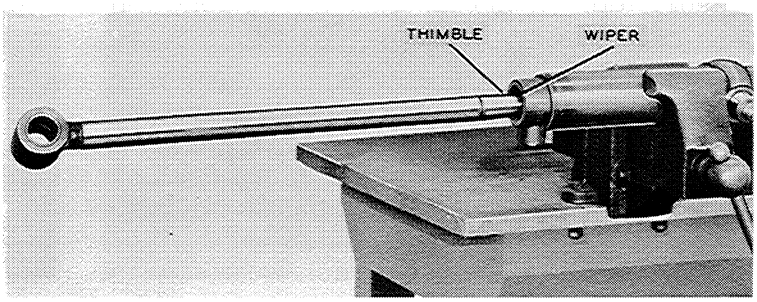

Figure A-41

2. Coat the thimble with vaseline and insert the piston and A-13623 thimble into the tilt cylinder. Take care not to turn the lip of the wiper over during the piston rod installation. Push the piston rod all the way into the tilt cylinder and remove the thimble.

3. Insert the piston cup packings, piston and piston plates over the threaded end of the piston rod, Figure A-42. Be sure the chamfered sides of the piston plates are installed correctly.

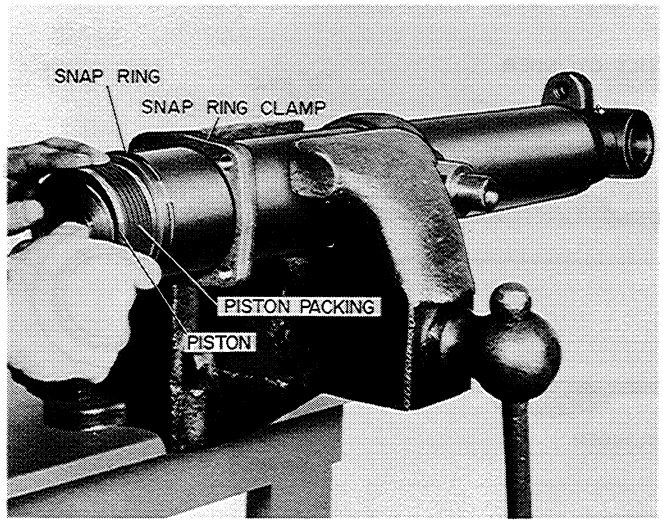

Figure A-42

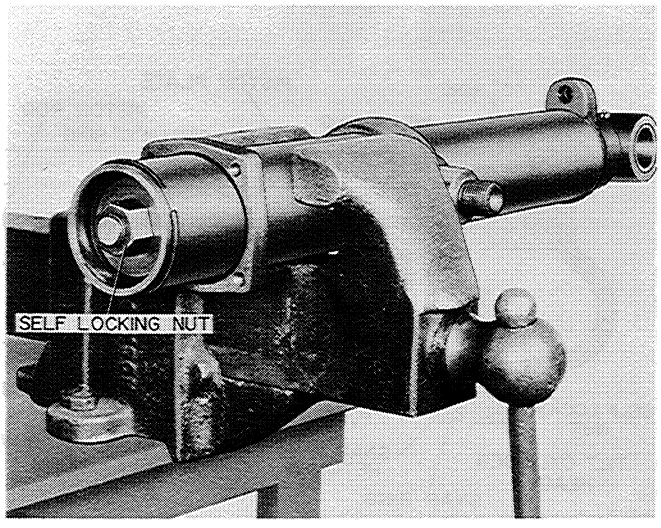

Figure A-43

4. Install the snap ring clamp and the snap ring on the tilt cylinder, Figure A-42.

5. Place the self locking nut on the threaded end of the piston rod and tighten the nut to 175 foot pounds, Figure A-43.

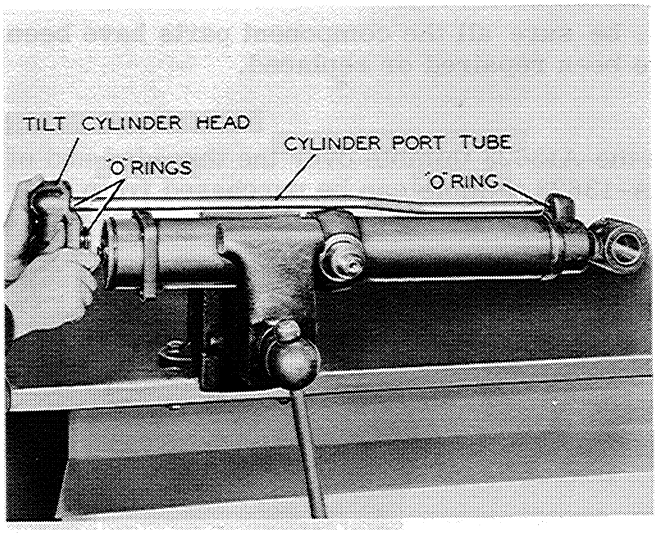

Figure A-44

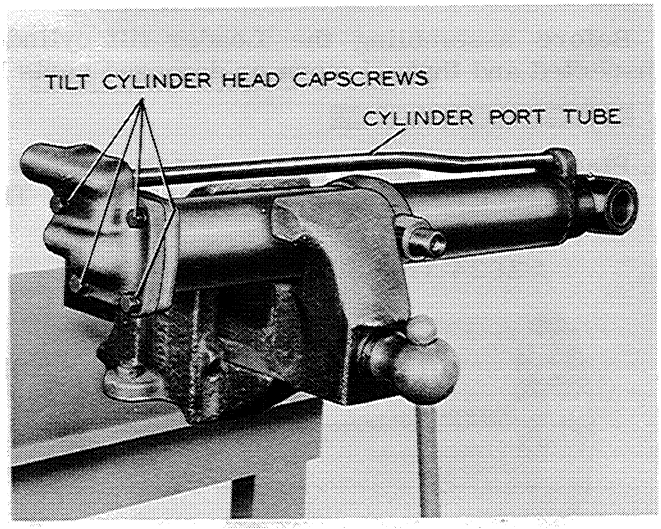

Figure A-45

6. Install the cylinder port tube in the cylinder head port and insert the tube into the forward cylinder port at the same time the cylinder head is inserted in the tilt cylinder, Figure A-44. Be careful not to damage any of the "O" rings during installation.

7. Install the four tilt cylinder head capscrews and thread them into the snap ring clamp. Progressively tighten the cylinder head capscrews to 90 foot pounds torque, Figure A-45.

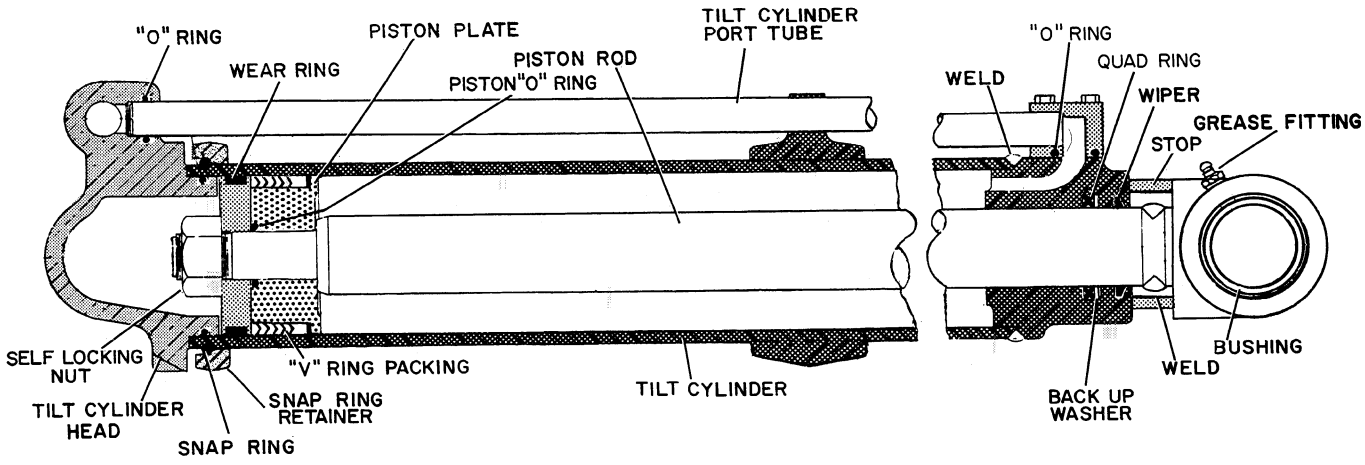

Figure A-46

NOTE: The CASE CORPORATION reserves the right to make improvements in design or changes in specifications at any time without incurring any obligation to install them on units previously sold.

SECTION

D

SERVICING THE VDP-4 AND VY-5 HYDRAULIC CONTROL VALVES ON CASE 4 WHEEL DRIVE UNIT LOADERS

Rac. Form 9-74562

JCAAE PRINTED IN U.S.A.

TABLE OF CONTENTS

VDP-4 Hydraulic Control Valve ---------- D-3 thru D-27

Introduction ---------- D-4 thru D-5
Specifications ---------- D-6
Removing the Control Valve from the Loader ---------- D-7
Disassembly of the Control Valve ---------- D-8 thru D-13

Removal of the Tilt and Lift Spools ---------- D-8 thru D-12
Removal of the Pressure Relief Valve ---------- D-13
Removal of the Drop Check Valves ---------- D-13

Inspection ---------- D-14 thru D-16
Reassembly of the Control Valve ---------- D-17 thru D-21

Reassembly of the Tilt Spool ---------- D-17
Reassembly of the Float Lift Spool ---------- D-18 thru D-21
Installation of the Pressure Relief Valve ---------- D-21
Installation of the Drop Check Valves ---------- D-21

Installing the Control Valve in the Loader ---------- D-22 thru D-23
Service Suggestions for the VDP-4
Hydraulic Control Valve ---------- D-24 thru D-27

Pressure Relief Valve Adjustment for VDP-4 and
VY-5 Hydraulic Control Valves ---------- D-28 thru D-30

VY-5 Hydraulic Control Valve ---------- D-31 thru D-49

Introduction ---------- D-32 thru D-33
Removing the Control Valve from the Loader ---------- D-34
Disassembly of the Control Valve ---------- D-35 thru D-38

Removal of the Tilt and Lift Spools ---------- D-35 thru D-36
Removal of the Pressure Relief Valve ---------- D-37
Removal of the Drop Check Valves ---------- D-38

Inspection ---------- D-40 thru D-41
Reassembly of the Control Valve ---------- D-42 thru D-44

Reassembly of the Tilt Spool ---------- D-42
Reassembly of the Float Lift Spool ---------- D-42 thru D-43
Installation of the Pressure Relief Valve ---------- D-44
Installation of the Drop Check Valves ---------- D-43

Installing the Control Valve in the Loader ---------- D-45
Service Suggestions for the VY-5
Hydraulic Control Valve ---------- D-46 thru D-49

SERVICING THE VDP-4 HYDRAULIC CONTROL VALVE

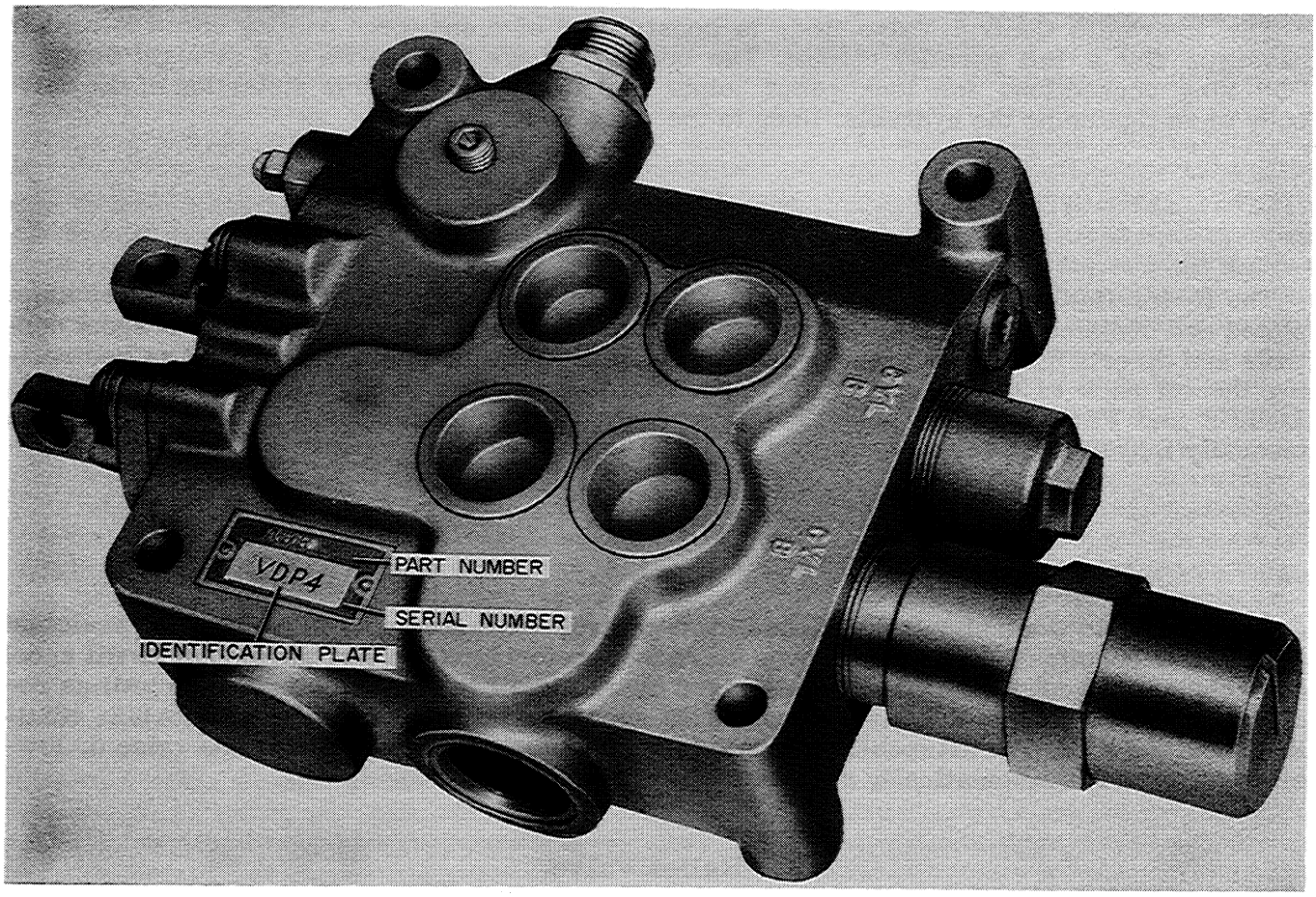

Figure 1

INTRODUCTION

General

The VDP-4 Hydraulic Control Valve Assembly used on Case 4 Wheel Drive Unit Loaders contains a one piece body, two control spools, check valves and a pressure relief valve. The hydraulic control valve assembly is located in the front of the loader on the right hand side panel at the front of the operator's foot board. The hydraulic control valve assembly controls the hydraulic oil delivered by the pump to either the lift cylinder, tilt cylinders or back to the reservoir.

Construction Features

The Hydraulic Control Valve Body is constructed of a one piece casting cored to contain passages for a full parallel circuit. The body ports are tapped with SAE straight threaded "O" ring connections for leak proof joints and to prevent possible distortion of the valve body when tightening the hydraulic lines to the valve body.

Lift Spool

The Hydraulic Control Lift Spool used in the control valve assembly is corrosion resistant plated and contains lands and grooves to obtain metering control of the load. The lift spool controls and directs the flow of pressurized hydraulic oil to the lift cylinders as well as redirecting the oil back to the reservoir. The lift spool is a four position spool, RAISE, NEUTRAL, LOWER and FLOAT and is detent retained in the raise and float positions. The lift spool is manually moved to these four positions by the operator from the cockpit.

Tilt Spool

The Hydraulic Control Tilt Spool used in the control valve assembly is corrosion resistant plated and contains lands and grooves to obtain metering control of the load. The tilt spool controls and directs the flow of pressurized hydraulic oil to the tilt cylinders as well as redirecting the oil back to the reservoir. The tilt spool is a three position spool, RAISE, NEURAL and LOWER. The tilt spool is manually moved by the operator to either the raise or lower position and is automatically returned to neutral by a centering spring.

Relief Valve

The Pressure Relief Valve is located in the control valve assembly to prevent excessive oil pressure build up in the hydraulic system. The pressure relief valve is adjustable so that the right pressure setting can be obtained whenever the relief valve is serviced, cleaned, inspected or replaced.

Drop Check Valve

The function of the drop check valves, is to prevent hydraulic oil from flowing back to the pump as the spools are moved from or through the neutral position.

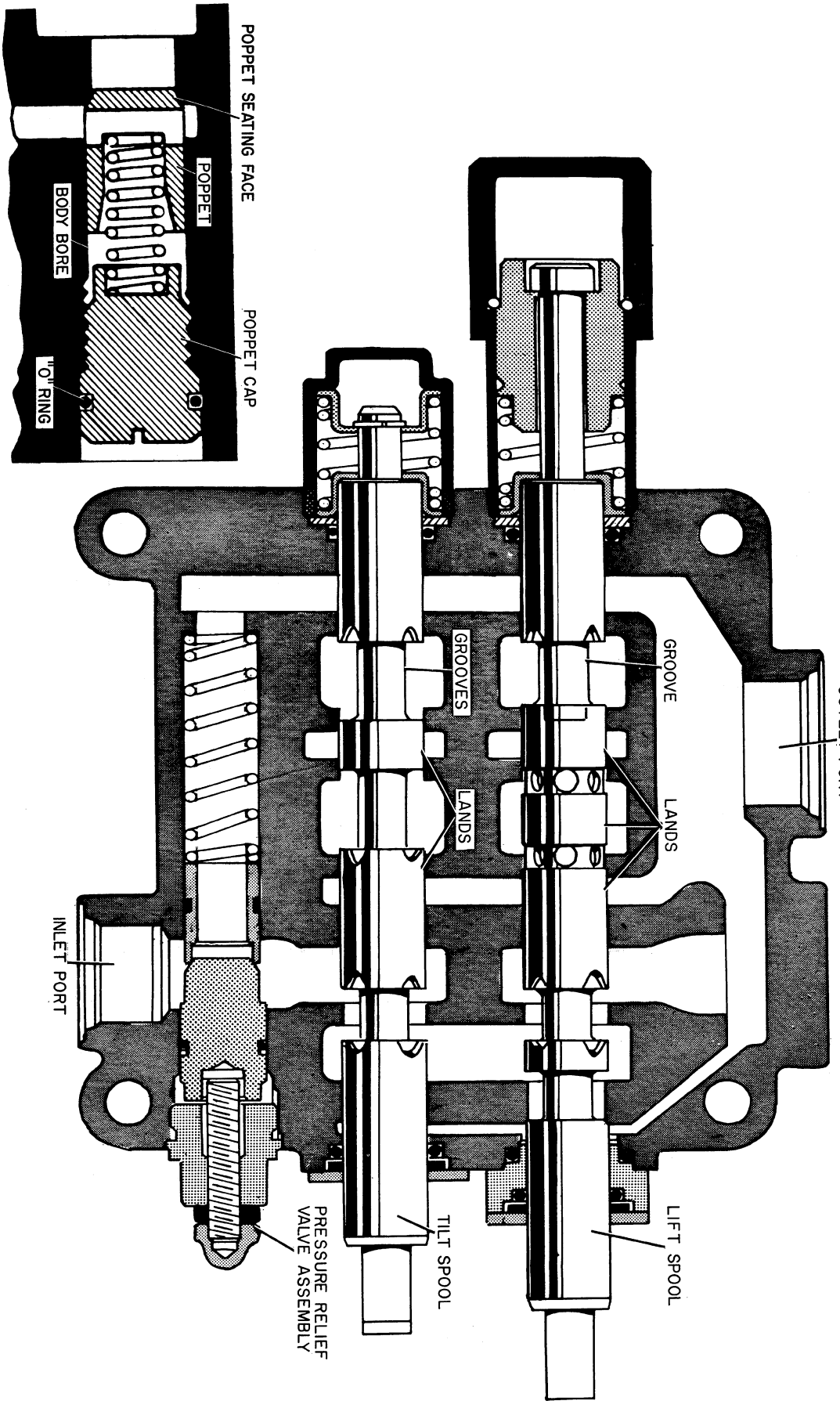
POPPET SEATING FACE
POPPET
BODY BORE
"O" RING
POPPET CAP
OUTLET PORT
GROOVE
GROOVES
LANDS
LANDS
INLET PORT
LIFT SPOOL
TILT SPOOL
PRESSURE RELIEF VALVE ASSEMBLY

Figure D-2

VDP-4 SPECIFICATIONS

Pump Body	Replaceable, One piece construction 2 spool open center, parallel circuit
Pressure Relief Valve	Replaceable, adjustable and Hydraulically operated
Standard float Lift Spool	Replaceable, Four position (Raise, Neutral Lower and Float) Detent retained in Raise and Float
Standard Float Lift Spool Dimensions	Approximately 11-3/4 Inches
Lift Spool (Optional)	Three position Spring centered (Rasie,Neutral and Lower)
Lift Spool Dimensions (Optional)	Approximately 11-7/16 Inches
Tilt Spool	Three positions, Spring centered. (Raise, Neutral and Lower)
Tilt Spool Dimensions	Approximately 11-7/16 Inches
Drop Check Valves	Spring Loaded, Hydraulically operated, One each spool.

REMOVAL OF THE VDP-4 HYDRAULIC CONTROL VALVE FROM THE LOADER

Before removing the VDP-4 Hydraulic Control Valve from the loader, the loader must be on a level surface with the bucket resting flat on the ground or floor. Shut the engine off, then move both of the hydraulic control levers back and forth several times to relieve the hydraulic pressure built up in the system. Now remove both the front plates and thoroughly steam clean the hydraulic control valve to prevent dirt from entering the hydraulic system during removal. Drain the hydraulic reservoir.

REMOVAL

1. Loosen the return line hose clamps and remove the return line hose, Figure D-3. Loosen the large hex nut on the control valve.

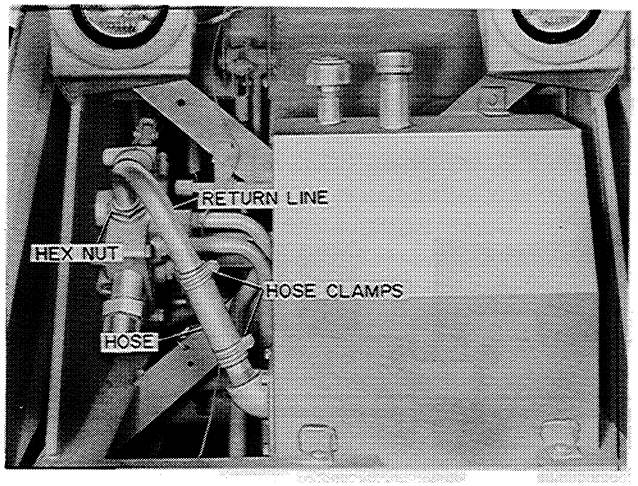

Figure D-3

2. Remove the four cylinder hydraulic lines from the side of the control valve, Figure D-4.

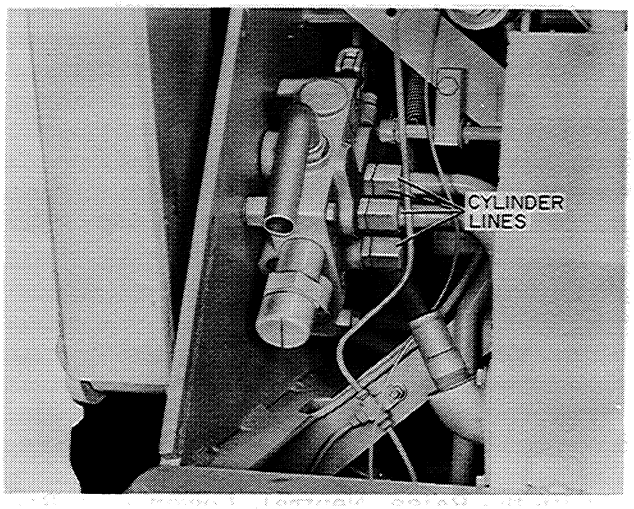

Figure D-4

3. Working from inside the loader cockpit - disconnect the control lever linkage from the valve spools, Figure D-5. Remove the high pressure hydraulic oil inlet line from the bottom of the control valve, Figure D-5.

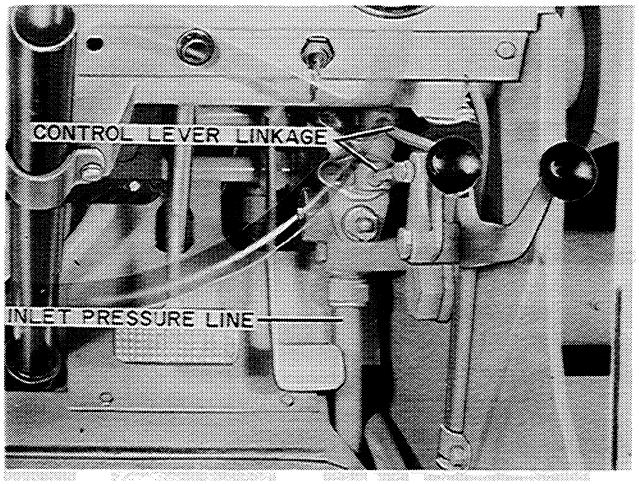

Figure D-5

4. Remove the 1/2" x 4-1/2" mounting bolts that hold the valve in place, Figure D-6. The control valve now can be lowered down and out of the loader chassi.

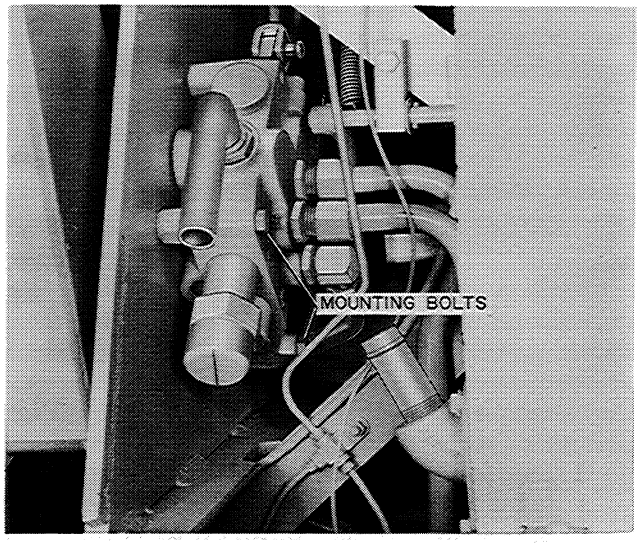

Figure D-6

DISASSEMBLY OF THE VDP-4 HYDRAULIC CONTROL VALVE

GENERAL

With the hydraulic control valve removed from the loader, the valve can be easily disassembled, cleaned, inspected and serviced. Before starting to disassemble the hydraulic control valve, make sure the exterior of the valve body is clean, especially on the area that is to be disassembled. Make sure that all parts are clearly tagged so that when used in reassembly, they can be returned to their respective places. Switching spools may reduce clearance and cause sticking or binding, on the other hand, it may increase clearance causing excessive leakage. Switching drop check vales may cause improper seating or sticking. Discard all "O" rings, gaskets and wipers and replace with new parts when reassembling the control valve.

TYPES OF LIFT SPOOLS

There are two types of lift spools used in the VDP-4 control valve assembly:
The Optional Lift Spool- - - - - - - - - The Float Lift Spool

1. The Optional Lift Spool is a three position spool, with Raise, Neutral and Lower. The Optional Lift Spool is spring centered to return to the Neutral position, Figure D-7. Removal and Disassembly of the Optional Lift Spool is the same procedure as that of the Tilt Spool. Refer to Pages D-11 thru D-12.

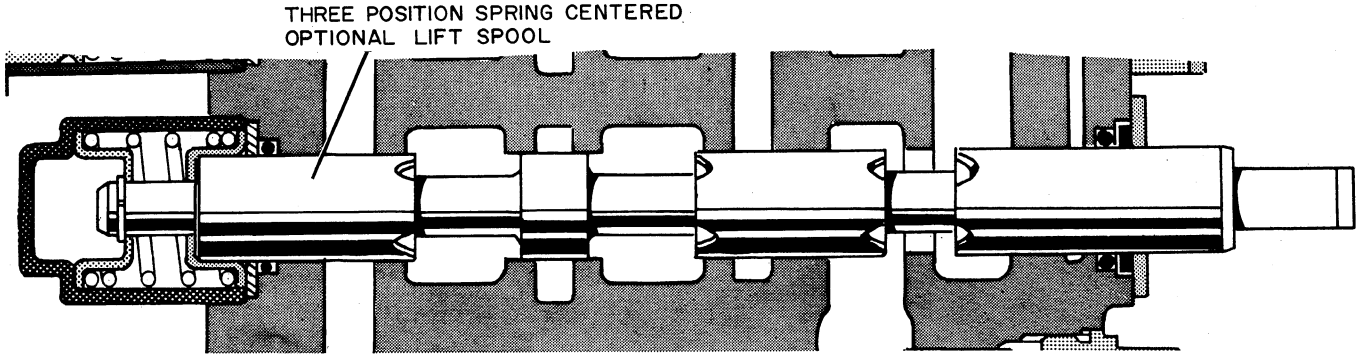

Figure D-7

2. The Float Lift Spool has been used with two types of Detent Mechanisms:
Retained Float Detent - - - - - - - Retained Float and Raise Detent

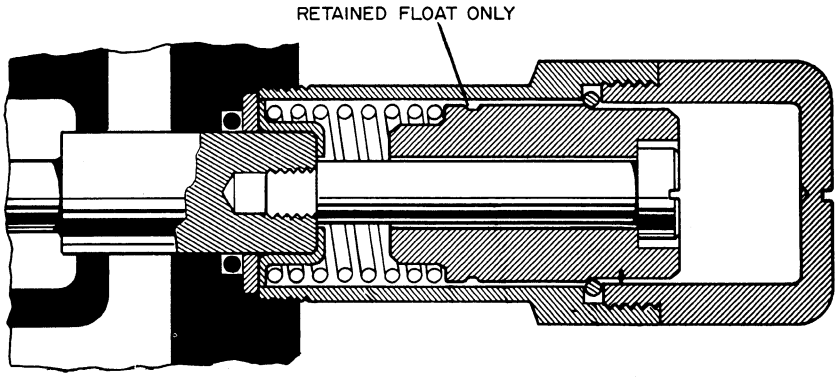

Figure D-8

1. The four position spool and detent mechanism, with the Raise, Neutral, Lower and Retained Float features, Figure D-8 is retained only in the float position. This type of spool is spring centered to return automatically to Neutral from either the Raise or Lower position.

B. The four position spool and detent mechanism with the Retained Raise, Neutral, Lower and Retained Float features, Figure D-9 is retained in both the Rasie and Float positions. This type of spool is spring centered to return automatically to Neutral from only the Lower position and must be moved manually from either the Raise or Float positions. Refer to Page D-10 for disassembly.

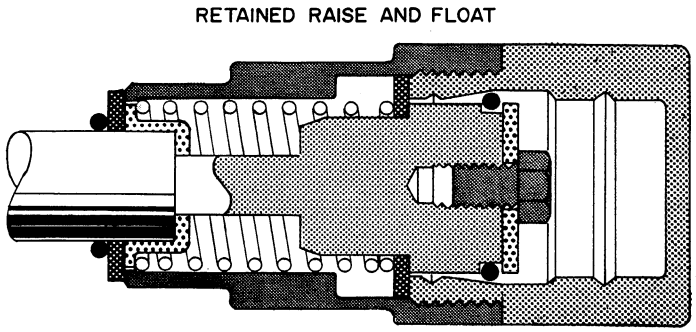

Figure D-9

DISASSEMBLY OF BOTH TYPES OF LIFT SPOOLS

1. Remove the tubing adapters from the side of the control valve using a 1-1/2" wrench Figure D-10.

NOTE

If a vise is used to hold the control valve - be careful not to distort or crack the valve body.

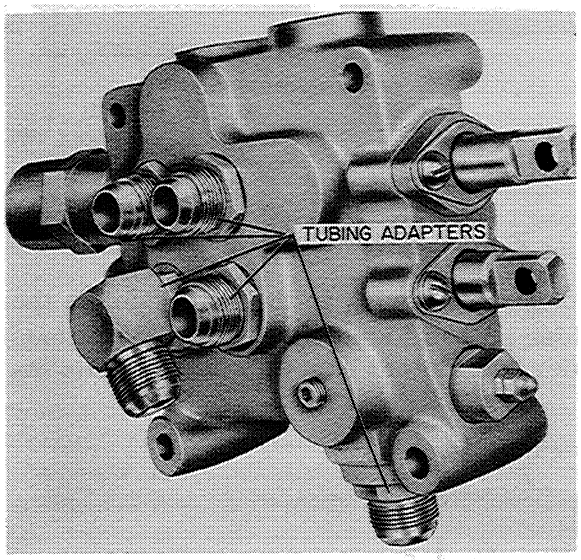

Figure D-10

2. Remove the lift spool end cap using a pipe wrench on the large outer portion of the end cap as shown in Figure D-11. It may be necessary to hold the large hex portion of the spool housing in order to remove the end cap.

NOTE

If the end cap and spool housing are removed together, disassembly of the spool will be more difficult.

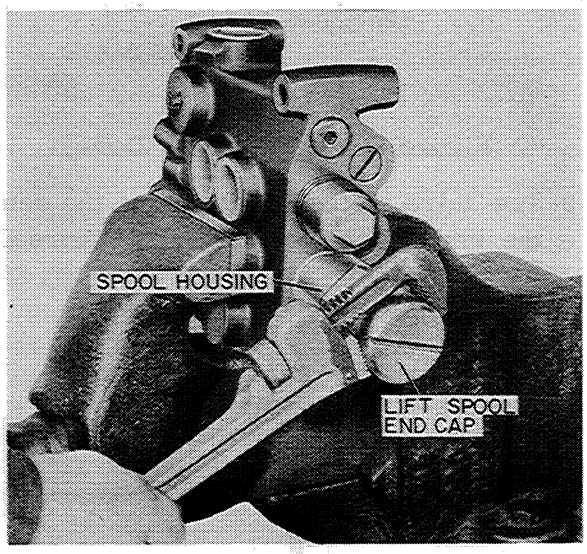

Figure D-11

3. To remove the Spool, pull outward as shown in Figure D-12

   NOTE: Never try to remove the Lift Spool out through the other end, as it may cause damage to the spool.

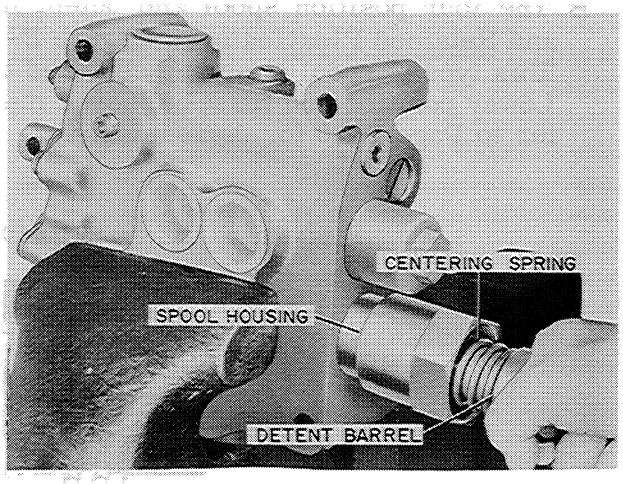

Figure D-12

DISASSEMBLY OF THE DETENT MECHANISMS

1. Three methods of attaching the detent barrel and centering spring to the Lift Spools have been used, Figures 13 and 14 illustrate two of the methods used on Lift Spools that have Retained in Raise and Float Features. To disassemble either of these two assemblies, remove first either the cap screw or the role pin. Then remove the detent ring retainer, detent ring, detent barrel, centering spring and spring retainer, Figures D-13 and D-14.

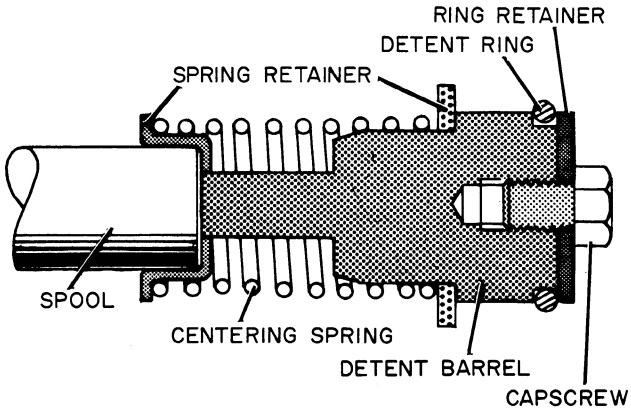

Figure D-13. Capscrew Design

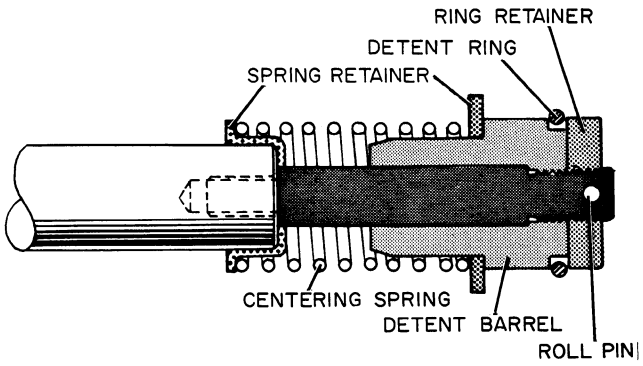

Figure D-14. Roll Pin Design

2. The third method of attaching the detent barrel and centering spring to the Lift Spool is the the use of the shoulder bolt, Figure D-15. The shoulder bolt is found only with the Retained Float mechanism. To disassemble, remove the shoulder bolt, detent barrel, centering spring and spring retainer, Figure D-15.

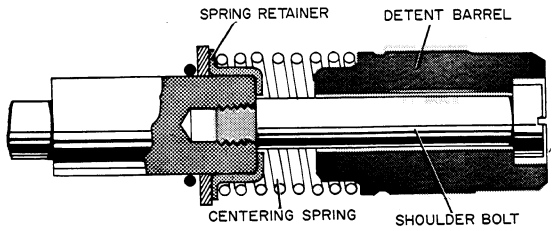

Figure D-15. Shoulder Bolt Design

3. With the Lift Spool removed you can now remove the spool housing, Figure D-16. Use either a 2-1/8" wrench or pipe wrench as shown in Figure D-16.

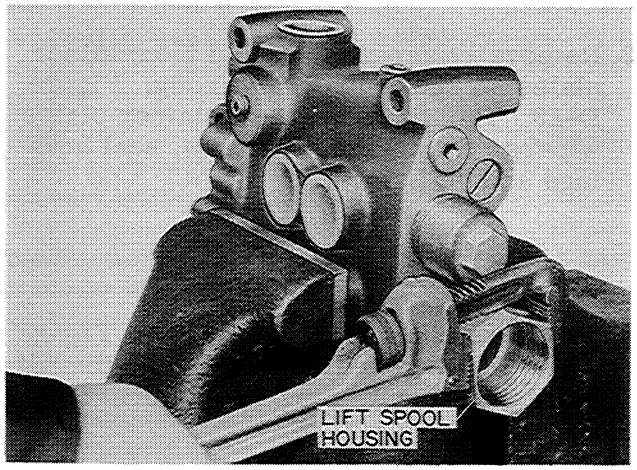

Figure D-16

REMOVAL AND DISASSEMBLY OF THE TILT SPOOL

1. Now remove the Tilt Spool End Cap using a 1" wrench as illustrated in Figure D-17.

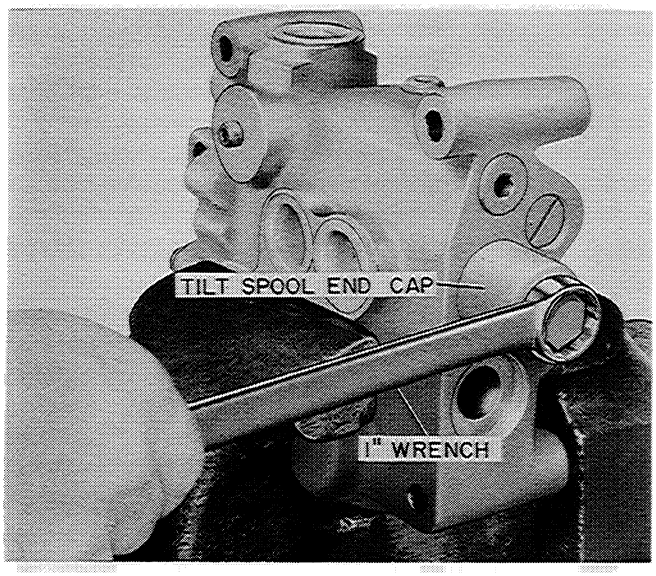

Figure D-17

2. The Tilt Spool can now be pulled out of the rear of the valve body, Figure D-18.

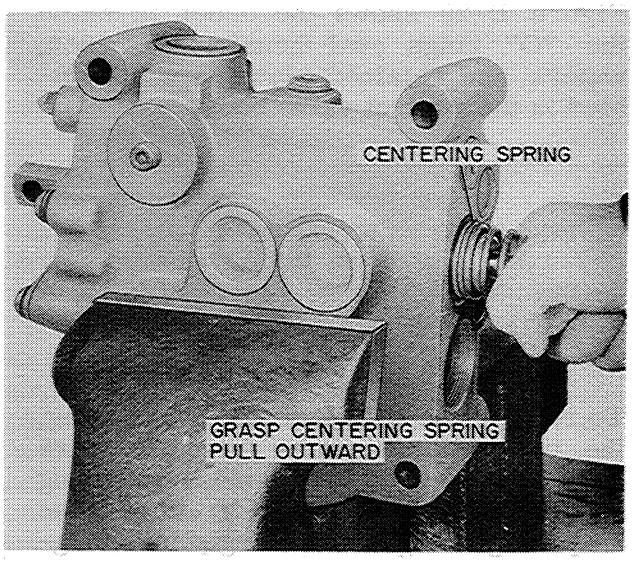

Figure D-18

NOTE

Never try to remove the Tilt Spool out through the other end, as it may cause damage to the spool.

3. Remove the screws that hold the retainer plates to the control valve body, Figure D-19. Then remove the retainer plates, wipers, retainers, "O" rings, seal housings and "O" rings.

NOTE

The retainer plates shown in Figure D-19 can be used in compressing the tilt spool centering spring, Figure D-21.

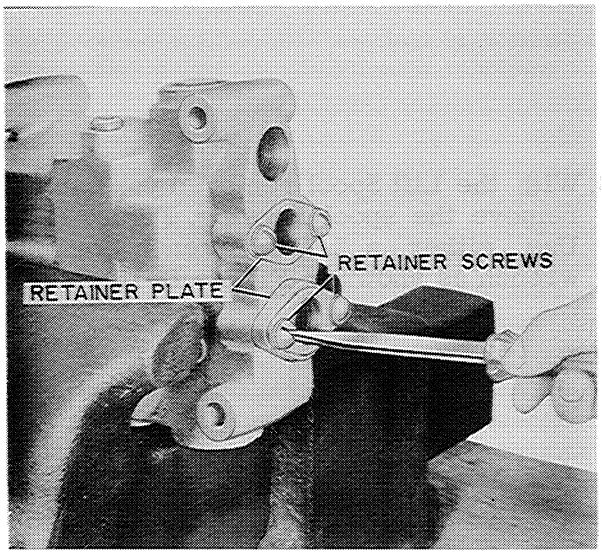

Figure D-19

4. Figure D-20 shows the order in which the "O" rings seal housing, retainer, wipers and retainer plates are assembled in the control valve body.

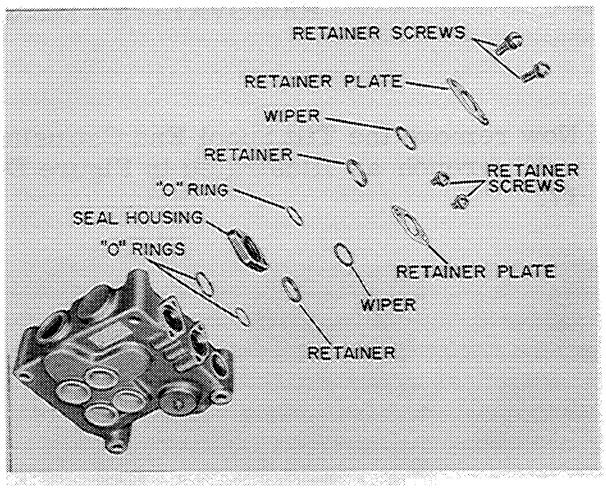

Figure D-20

5. To remove the tilt spool centering spring, the two retainer plates from the valve body must be used to compress the spring as illustrated in Figure D-21. Remove the snap ring using a snap ring pliers, Figure D-21.

CAUTION

Care must be taken when loosening the nuts until all of the spring pressure is released.

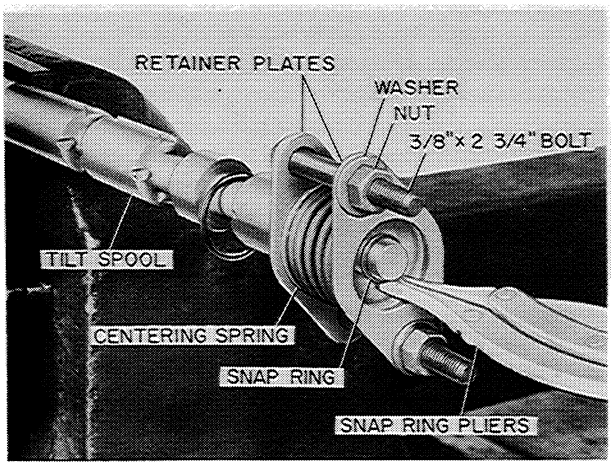

Figure D-21

REMOVAL OF THE RELIEF VALVE

1. Remove the acorn nut and loosen the lock nut, Figure D-22. Turn the adjusting screw out to relieve the spring tension. Now remove the relief valve cap assembly, valve seat, plunger and spring. Also remove the plug from the other end, Figure D-22.

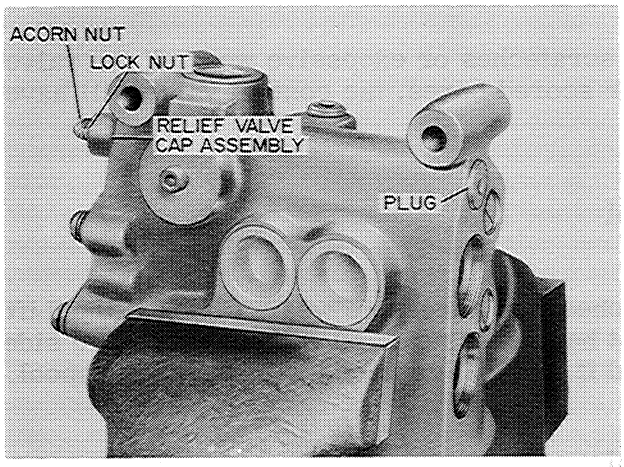

Figure D-22

2. Figure D-23, shows the order in which the relief valve is assembled in the control valve body.

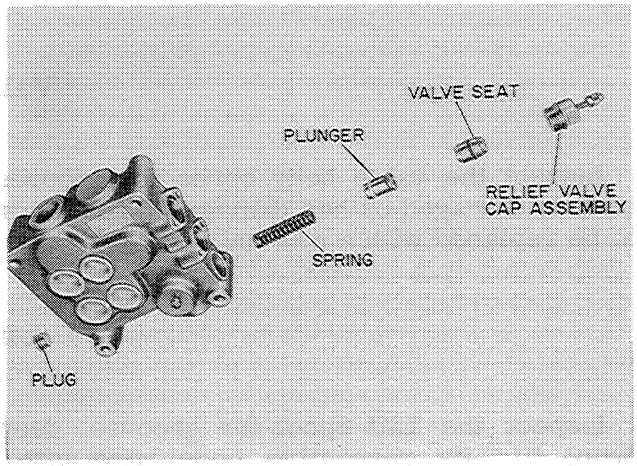

Figure D-23

REMOVAL OF THE CHECK VALVES

1. Remove the drop check valve caps, Figure D-24. Now remove the poppet springs and poppets.

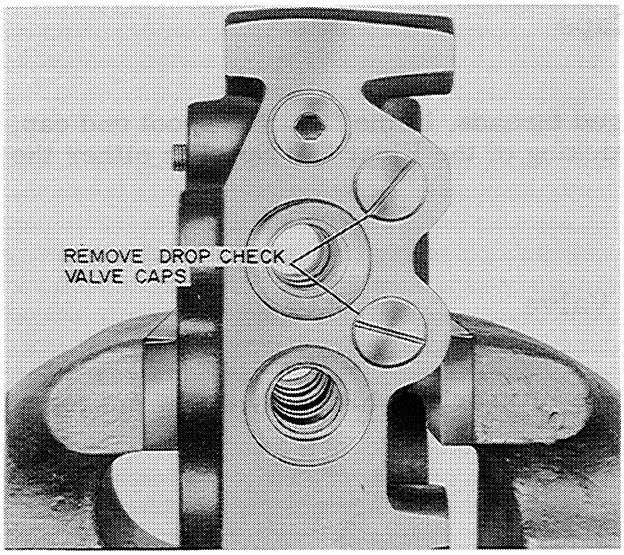

Figure D-24

A soft wire with a smooth hook end may be used, if necessary, to remove the poppet spring and poppit.

2. Figure D-25, shows the order in which the drop check valves are assembled in the control valve body.

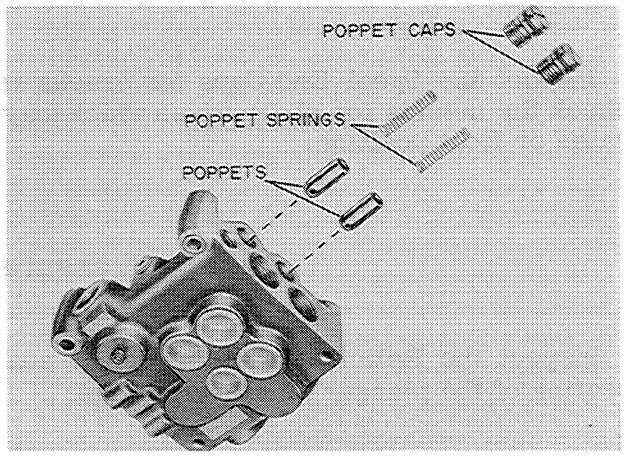

Figure D-25

INSPECTION OF THE VDP-4 CONTROL VALVE PARTS

Whenever the hydraulic control valve is disassembled for servicing, inspect all the component parts and replace any that are found to be worn or damaged.

Valve Body

Inspect the valve body bores for grooves, deep scrateches or excessive wear. If the valve body is damaged or has damaged threads, cracks or scored bores, the control valve will have to be replaced with a new unit.

Lift Spool

Inspect the Lift Spool for grooves, deep scratches and excessive wear. Check if the Lift Spool fits its respective body bore with a slight hand pressure and without excessive side clearance. If the spool is loose, scored or damaged it must be replaced with a new lift spool.

Tilt Spool

Inspect the Tilt Spool for grooves, deep scratches and excessive wear. Check to see if the Tilt Spool fits its respective body bore with a slight hand pressure and without excessive side clearance. If the spool is loose, scored or damaged it must be replaced with a new tilt spool.

Spool End Caps

Inspect the Spool End Caps for cracks and damaged threads. In the float lift spool end cap, check the detents for sharp edges which may cause sticking of the Float Lift Spool in either the raise or float position.

Pressure Relief Valve

Inspect the Relief Valve Plunger and seat for ridges or scoring which may cause improper seating of the plunger or allow leakage.

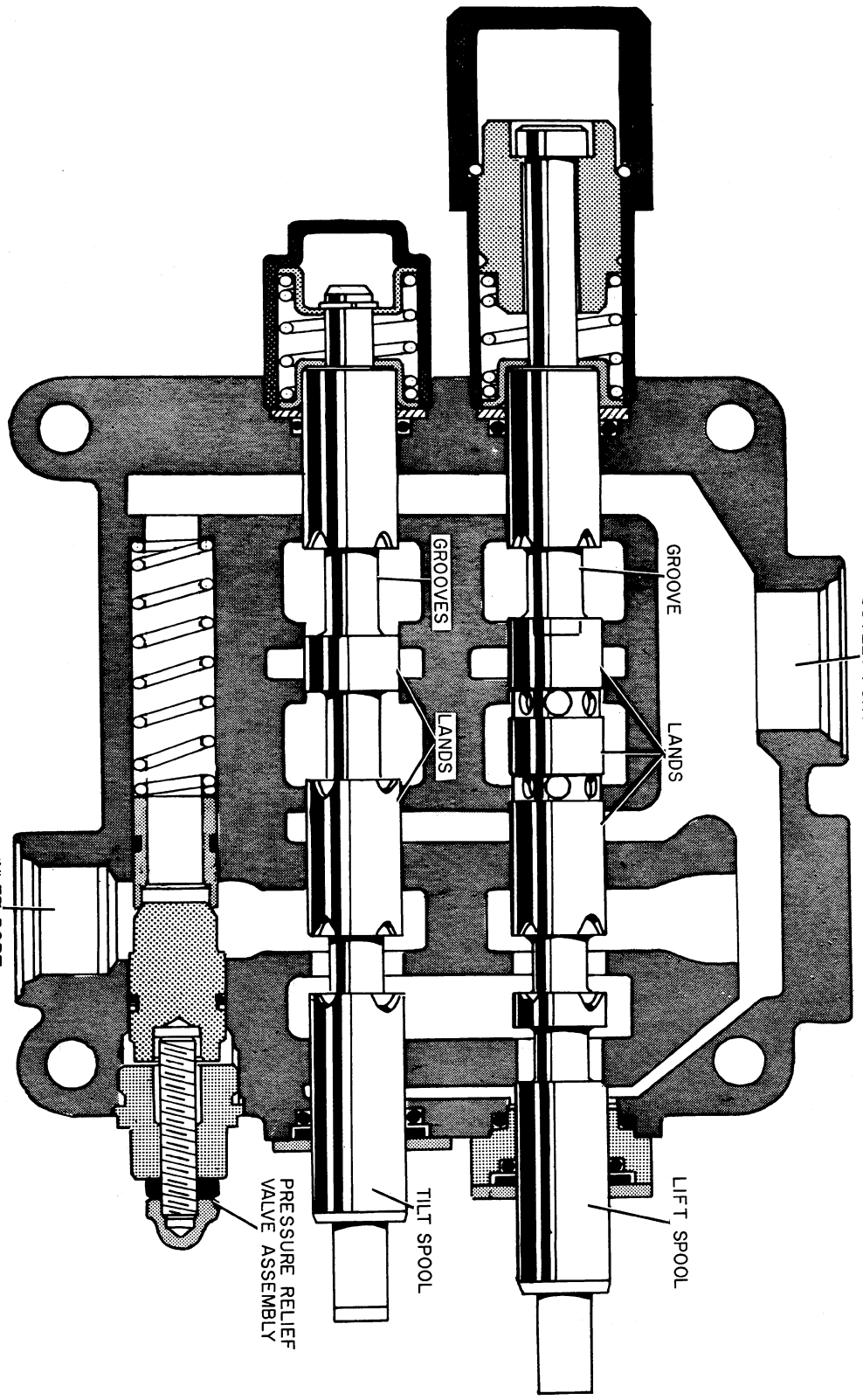
OUTLET PORT
GROOVE
GROOVES
LANDS
LANDS
INLET PORT
LIFT SPOOL
TILT SPOOL
PRESSURE RELIEF VALVE ASSEMBLY

Figure D-26

Inspection (Continued)

DROP CHECK VALVES

Inspect the drop check valve poppet and its seating face in the valve body for grooves or defects which may cause leakage, Figure D-27. Check the poppet for free movement in the valve body bore, Figure D-27. If the poppet appears to be faulty replace it with a new one.

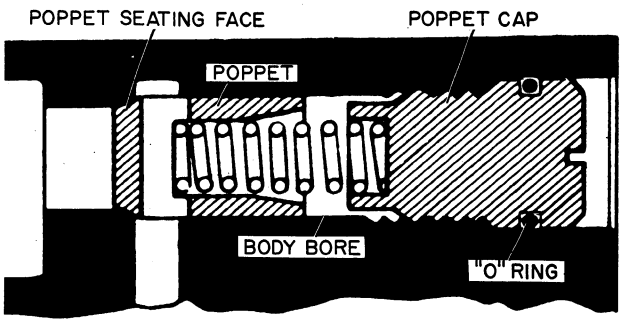

Figure D-27

TILT SPOOL CENTERING SPRING

To check the Tilt Spool Centering Spring, place the centering spring in a spring tester as shown in Figure D-28. The correct spring pressure when compressed to 29/32 Inch is between 45 and 55 pounds. Install a new spring if the pressure is less than 45 pounds.

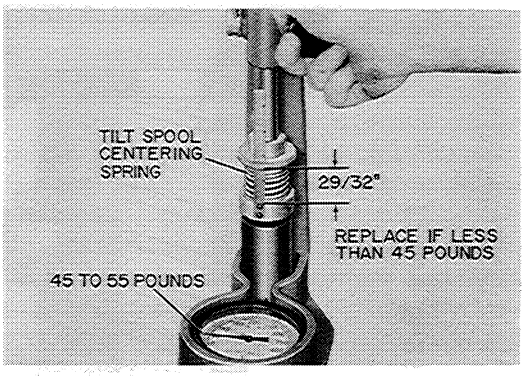

Figure D-28

FLOAT LIFT SPOOL CENTERING SPRING

To check the Float Lift Centering Spring, place the centering spring in a spring tester as shown in Figure D-29. The correct spring pressure when compressed to 1-11/16 Inches is between 70 and 80 pounds. Install a new spring if the pressure is less than 70 pounds.

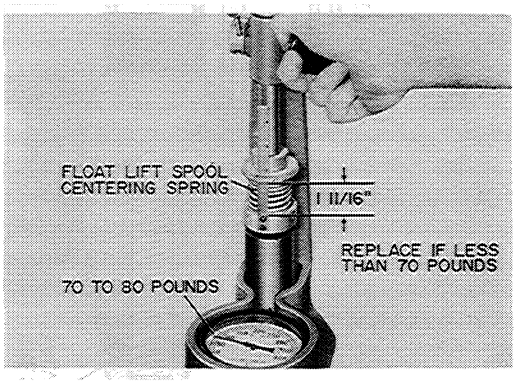

Figure D-29

NOTE

Discard all "O" rings, gaskets and wipers. Replace with new parts when reassembling the control valve.

IMPORTANT

After the parts have been inspected and the control valve is not to be reassembled immediately, coat all reusable parts with hydraulic oil.

REASSEMBLY OF THE VDP-4 HYDRAULIC CONTROL VALVE

Prior to reassembly of the hydraulic control valve, make certain that the bench tools and all valve parts are clean. If necessary, rewash all parts before assembly. Coat all the valve parts with hydraulic oil before installing them in the valve body.

ASSEMBLY AND INSTALLATION OF TILT SPOOL

1. To reassemble the Tilt Spool, place a retainer plate, spring retainer, spring, spring retainer, and retainer plate over the end of the spool. Compress the spring as shown in Figure D-30. Now install a new snap ring. Make sure the snap ring is fully seated in the groove. Then carefully remove the spring compressing device. Remove the Tilt Spool from the vise and place an "O" ring retainer and "O" ring over the eye end of the spool. Care must be taken to prevent cutting the "O" ring during installation.

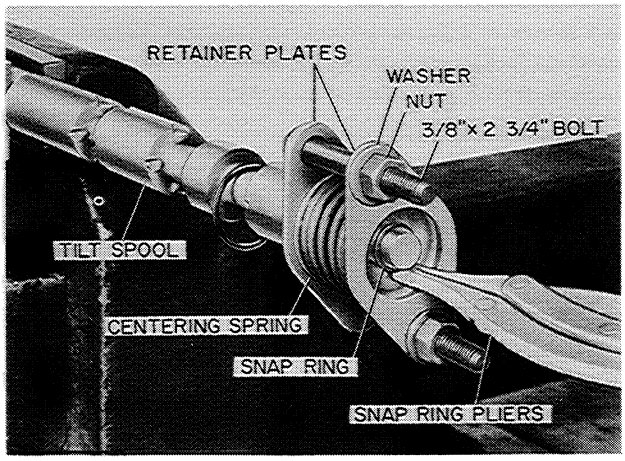

Figure D-30

2. Insert the Tilt Spool assembly into the valve body and install the Tilt Spool Cap as shown in Figure D-31. Tighten the Spool Cap until it bottoms.

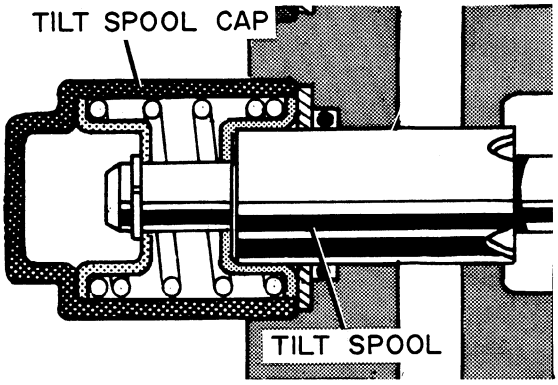

Figure D-31

3. Install the "O" ring retainer, wiper and retainer plate in the order as shown in Figure D-32 over the eye end of the Tilt Spool. Install the retainer plate, screws and washers.

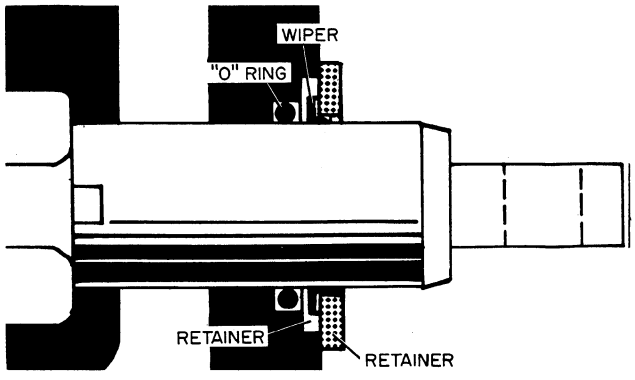

Figure D-32

ASSEMBLY AND INSTALLATION OF FLOAT LIFT SPOOL

Cap Screw Design

1. Assemble the detent mechanism to the spool (Cap Screw Design) Figure D-33, by placing the spring retainer over the end of the spool. Then assemble the centering spring retainer, detent barrel, detent ring, ring retainer and cap screw, Figure D-33.

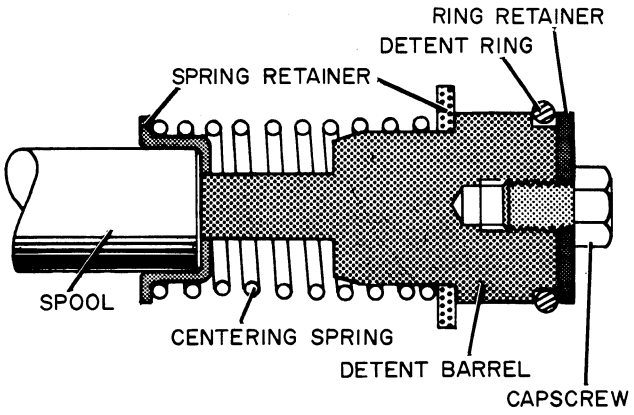

Figure D-33. Cap Screw Design - Detent Ring Retainer

NOTE: Use Lock - Tite or equivalent on all threads. Failure to use Lock - Tite may result in the detent assembly working loose during operation. Lock - Tite is available in most automotive stores. IMPORTANT: When using Lock-Tite, clean the threads with Carbon-tet or equivalent. Then apply the Lock-Tite and let stand for at least 15 hours.

2. Now install the spool housing, "O" ring retainer and "O" ring down over the eye end of the spool, Figure D-34. Then insert the spool assembly into the valve body. Tighten the spool housing into the valve body, Figure D-34. Then install the spool end cap, Figure D-34.

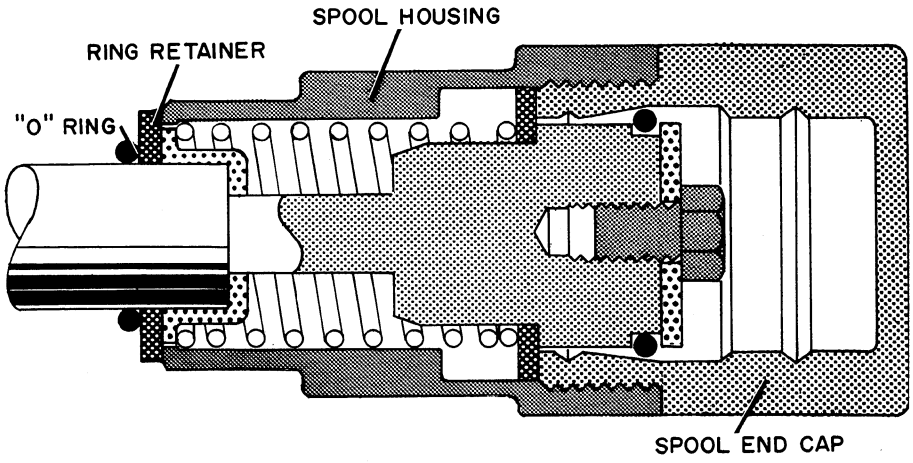

Figure D-34. Complete Assembly of Cap Screw, Spool Detent Mechanism

1. Assemble the detent mechanism to the spool (Roll Pin Design), Figure D-35, by placing the spring retainer over the end of the spool. Then assemble the centering spring,retainer, detent barrel, detent ring, ring retainer and roll pin, Figure D-35.

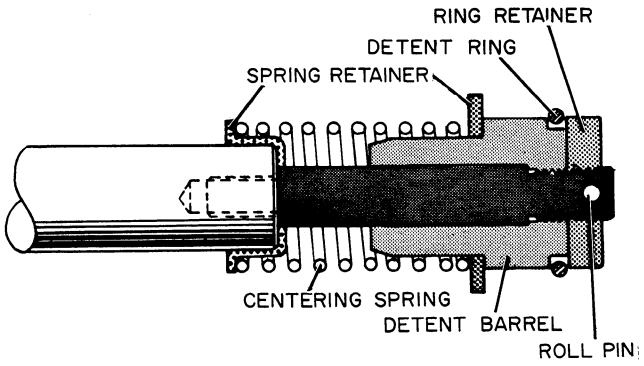

Figure D-35. Roll Pin Design Detent Ring Retainer

NOTE: Use Lock - Tite or equivalent on all threads. Failure to use Lock - Tite may result in the detent assembly working loose during operation. Lock - Tite is available in most automotive stores. IMPORTANT: When using Lock - Tite,clean the threads with Carbon-tet or equivalent. Then apply the Lock-Tite and let stand for at least 15 hours.

2. Now install the spool housing ,"O" ring retainer and "O" ring down over the eye end of the lift spool. Care must be taken to prevent cutting the "O" ring during installation. Now insert the spool assembly into the valve body. Tighten the spool housing to the valve body. Figure D-36. Then install the lift spool end cap, Figure D-36.

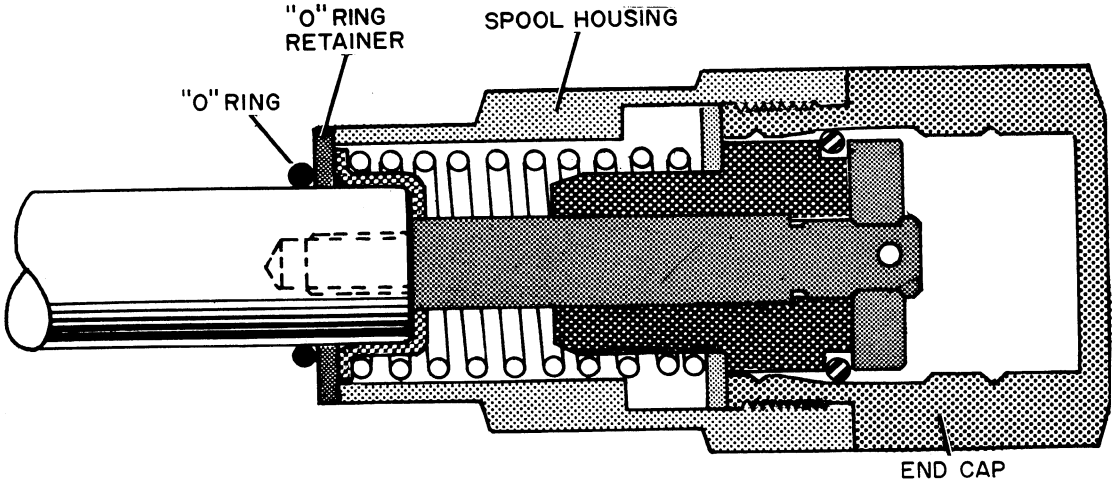

Figure D-36

1. To reassemble the detent mechanism to the spool, Figure D-37, install the "O" ring, retainer. Then assemble the centering spring, detent barrel and shoulder bolt, Figure D-37.

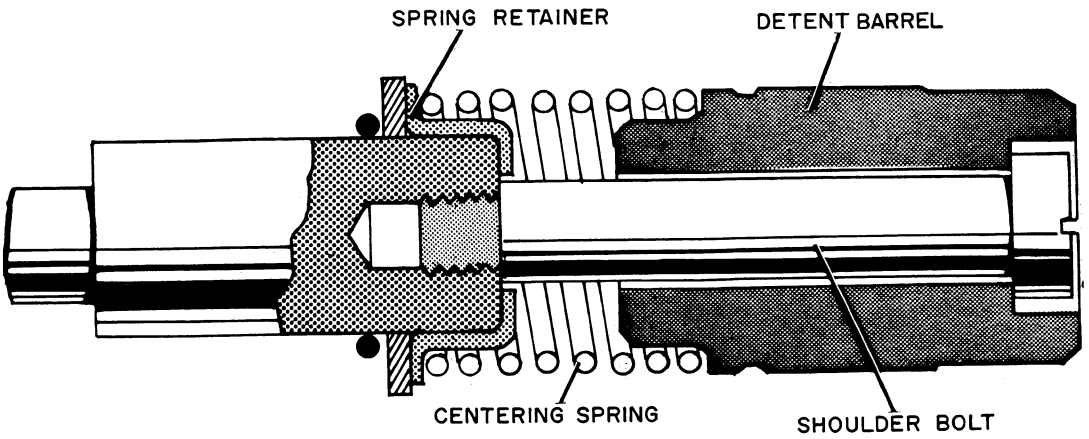

Figure D-37. Shoulder Bolt Design

NOTE: Use Lock - Tite or equivalent on the threads of the shoulder bolt, Figure D-37. Failure to use Lock - Tite may result in the shoulder bolt working loose from the spool during operation. IMPORTAND: When using Lock - Tite, clean the threads with Carbon - tet or equivalent. Then apply the Lock - Tite and let stand for at least 15 hours.

2. Insert the spool assembly into the valve body, Figure D-38. Then install the spool housing over the detent mechanism and into the valve body, Figure D-37. Now install the detent ring and end cap, Figure D-38.

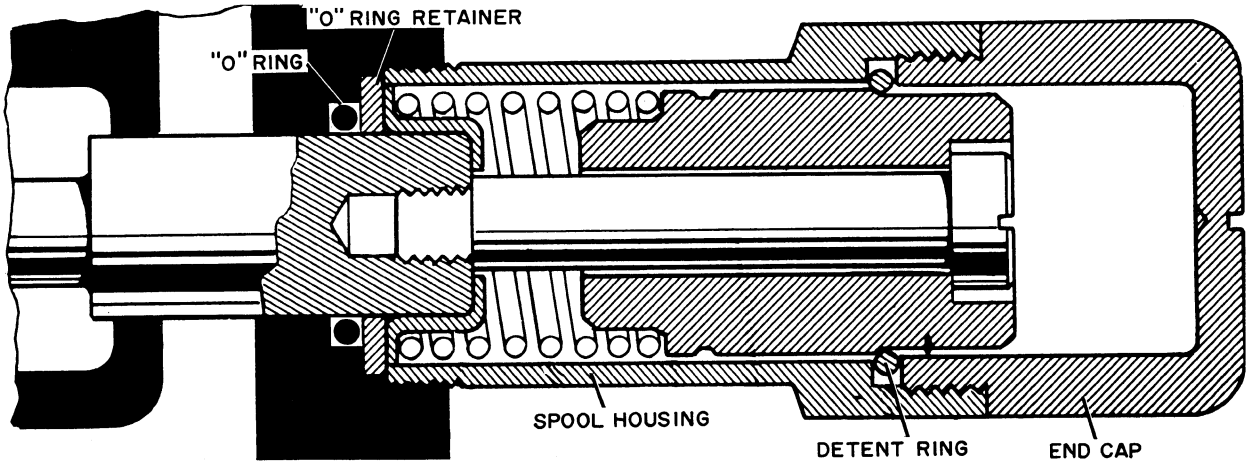

Figure D-38

Installation of the Float Lift Spool End Seals

1. Place a large "O" ring over the eye end of the spool and into the recess in the valve body, Figure D-39

2. Then install the seal housing,"O" ring, "O" ring retainer, wipers and retainer plate over the eye end of the spool, Figure D-39.

3. Now screw the retainer plate and seal housing to the valve body with the screws and lockwashers, Figure D-39.

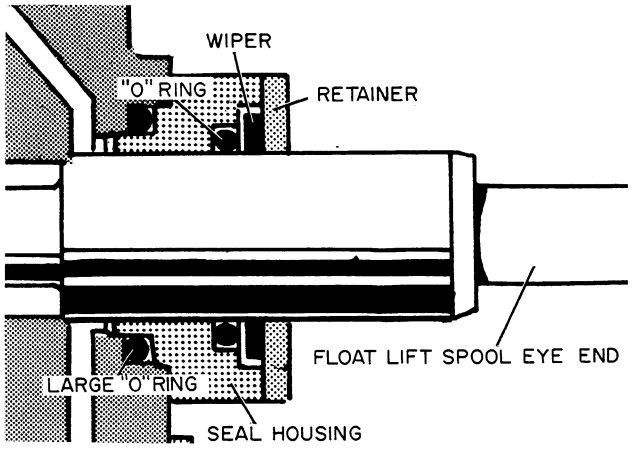

Figure D-39

Installation of The Pressure Relief Valve

1. Place a new "O" ring on the relief valve plug and install the plug in the control valve body using a 5/8" wrench, Figure D-40.

2. Install a new piston ring on the relief valve plunger, Figure D-40.

3. Now insert the spring and plunger in the body bore, Figure D-40. Make certain the edge of the plunger is out toward the relief valve seat.

4. Install a new "O" ring on the relief valve seat, Figure D-40.

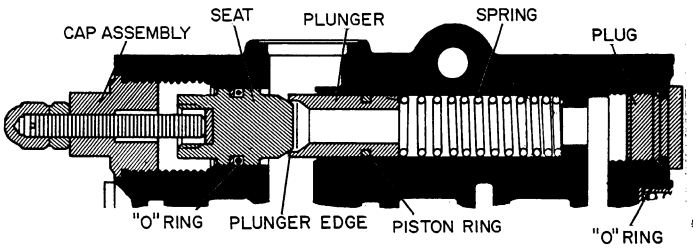

Figure D-40

5. Install the relief valve seat in the valve body and install the relief valve cap assembly, Figure D-40.

Installation of the Drop Check Valves In the Valve Body

When installing the check valves be sure they are installed in the same bores they were remove from in the valve body. Slide the valve poppet and spring down through the bore until it is seated against the body seat, Figure D-41. Now place a new "O" ring on the poppet cap and screw the top into the valve body until the cap bottoms, Figure D-41.

NOTE

Now install the tubing adapters and return lines.

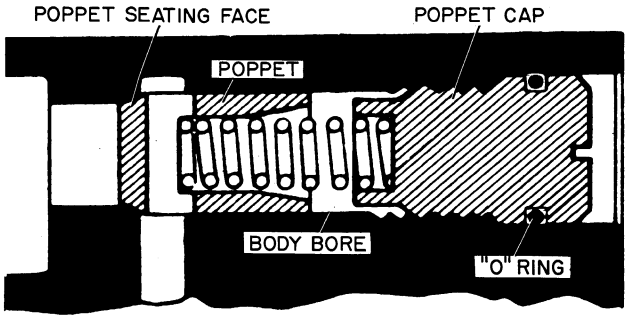

Figure D-41

INSTALLATION OF THE VDP-4 HYDRAULIC CONTROL VALVE IN THE LOADER

After the hydraulic control valve is reassembled it must be reinstalled in the loader and checked for leakage. Also, the pressure relief valve must be adjusted to the correct pressure setting. Just before installing the hydraulic control valve remove all the covers from the hydraulic lines on the loader.

INSTALLATION

1. Slide the control valve into the loader chassi, Figure D-42, Install the 1/2" x 4-1/2" bolts that hold the control valve to the loader side panel, Figure D-42.

CAUTION

Tighten the 1/2" x 4-1/2" mounting bolts evenly to 25 foot pounds - Failure to tighten bolts evenly may result in cracking or distortion of the valve body.

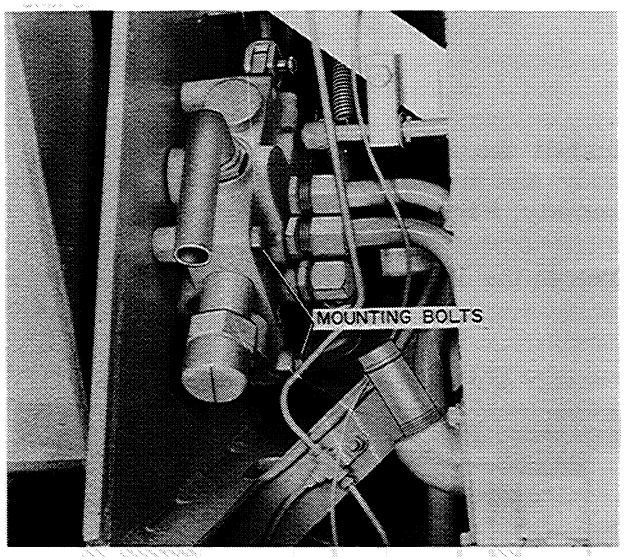

Figure D-42

2. Connect the four high pressure hydraulic lines to the side of the control valve, Figure D-43.

CAUTION

Torque the hydraulic line fitting evenly from 73 to 82 foot pounds.

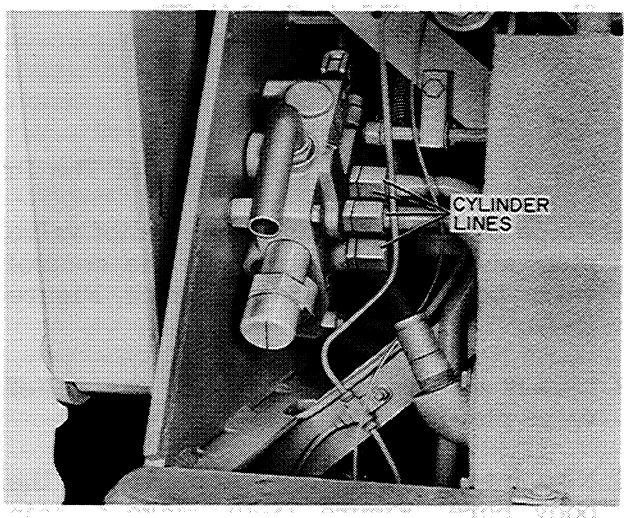

Figure D-43

3. Install the return line and tighten the large hex nut, Figure D-44. Now install the return hose and tighten the hose clamps, Figure D-44.

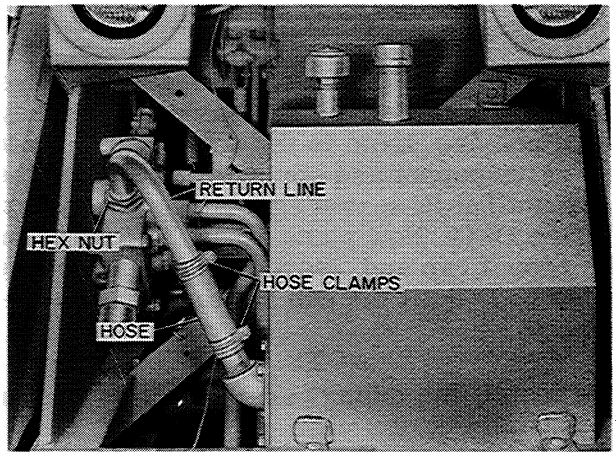

Figure D-44

4. Working from inside the loader cockpit, connect the inlet pressure line and control lever linkage, Figure D-45.

CAUTION

Torque the inlet pressure line fitting to 73 to 82 foot pounds.

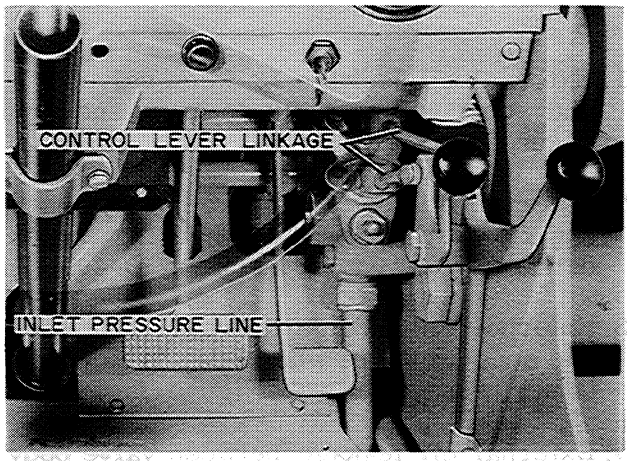

Figure D-45

IMPORTANT

After the hydraulic control valve has been installed and connected to the hydraulic system fill the reservoir with clean 10 W oil. Start the engine, bleed the hydraulic system by working both the lift and tilt control levers through several full raising and lowering cycles, and through several full tilt up and tilt down cycles. Check the oil level in the hydraulic reservoir and add oil if necessary. When raising and lowering the bucket, check the control valve for leakage, also during the tilt up and tilt down cycles.

SERVICE SUGGESTIONS VDP-4 HYDRAULIC CONTROL VALVE

Oil Leakage, External

CAUSE	REMEDY
1. External oil leakage between valve body and spool end caps due to loose end cap, Figure D-46. (1)	1. Tighten the spool end caps, Figure D-46. (1)
2. External oil leakage between valve body and float spool end seal housing due to damaged "O" ring, Figure D-46. (2)	2. Replace damaged "O" ring, Figure D-46 (2)
3. External oil leakage between valve body and spool retainer plates due to loose retainer plate screws, Figure D-46. (3)	3. Tighten retainer plate screws.
4. External oil leakage between valve body and tubing adapters due to damaged "O" rings.	4. Replace tubing adapter "O" ring.

Oil Leakage, Internal

CAUSE	REMEDY
1. Internal oil leakage between spool and wiper due to worn or damaged "O" ring, Figure D-46. (4)	1. Replace worn or damaged "O" ring, Figure D-46. (4)
2. Oil leakage around poppet valve caps due to worn or damaged "O" ring, Figure D-46. (5)	2. Replace worn or damaged "O" ring, Figure D-46. (5)
3. Oil leakage around pressure relief valve cap due to worn or damaged plunger "O" ring, Figure D-46. (6)	3. Replace worn or damaged plunger "O" ring, Figure D-46. (6)
4. Internal oil leakage from valve body into spool end caps due to worn or damaged "O" ring, Figure D-46. (7)	4. Replace worn or damaged "O" ring, Figure D-46. (7)

Slow Or Jerky Action Of Hydraulic System

CAUSE	REMEDY
1. Air in hydraulic system.	1. Check oil level in the hydraulic reservoir. Add oil if necessary.
2. Relief valve not correctly set.	2. Check relief valve pressure setting. Refer to Pages D-28 thru D-30.
3. Relief Valve Sticking.	3. Remove the relief valve for cleaning and inspection. Refer to Pages D-14 thru D-16.
4. Dirt or foreign particles lodged between relief valve plunger and seat.	4. Disassemble, clean and reassemble. Refer to Pages D-14 thru D-16.

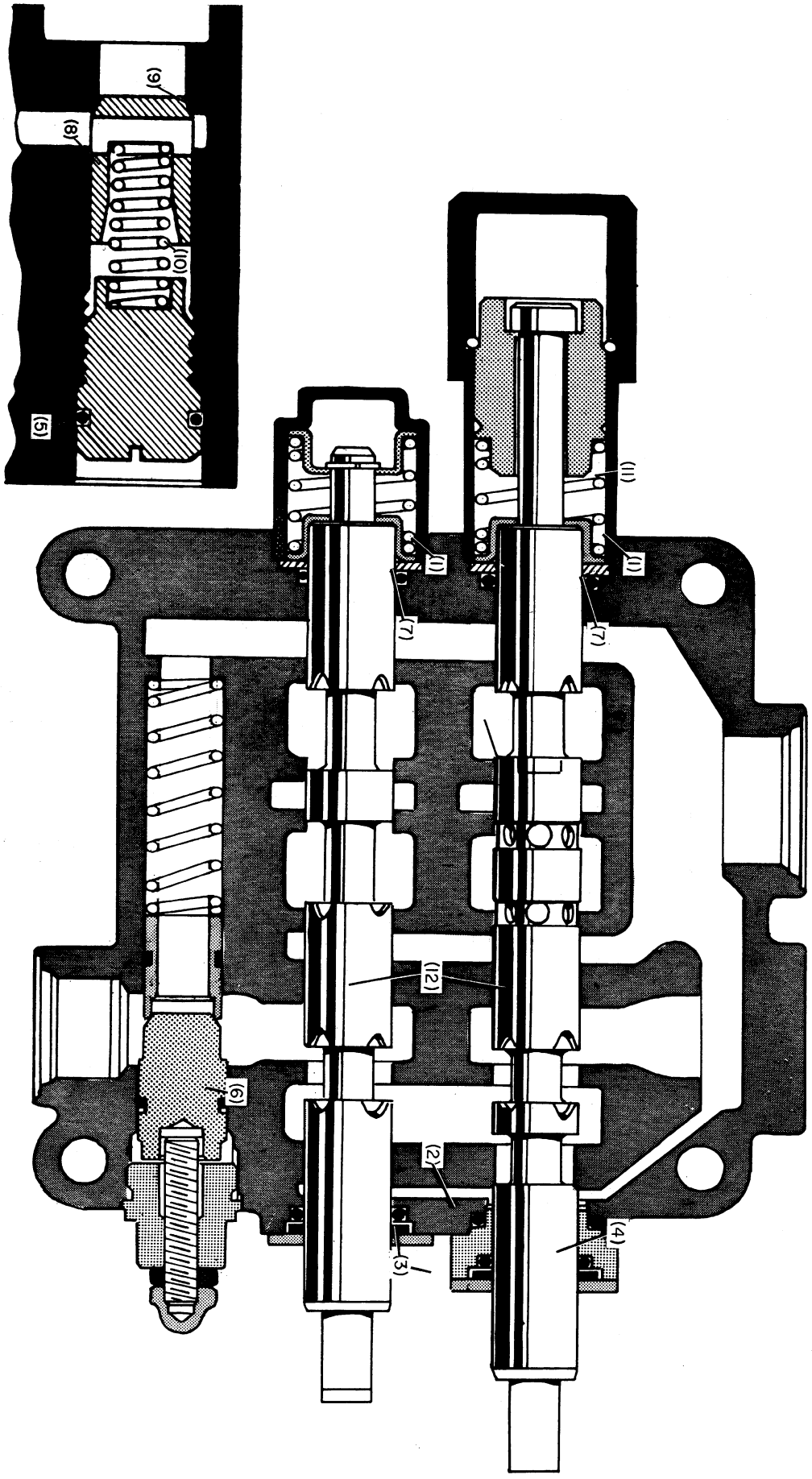

Figure D-46

Load Drops When Spool is Moved From Neutral to a Power Position

Cause	Remedy
1. Dirt or foreign particles lodged between drop check valve and poppet seat.	1. Remove the drop check valves for cleaning and inspection. Refer to Pages D-15
2. Scored drop check valve poppets, Figure D-47. (8)	2. Install new drop check valve poppet, Figure D-47. (8)
3. Scored drop check valve poppet seat in valve body, Figure D-47. (9)	3. Replace valve body.
4. Drop check valve spring worn or broken, Figure D-47. (10)	4. Check drop check valve spring. Replace if worn or broken. Refer to Page D-13 for spring retainers.

Spring Centered Spools Will Not Return To Neutral

Cause	Remedy
1. Spools will not return to neutral from either the raise or lower position due to weak or broken spring.	1. Remove and check centering spring, Figure D-47. (11) Refer to Page D-16 for correct spring tension.
2. Spools sticking or binding due to bent spool, varnish on spools or sharp corners on either spools or valve body, Figure D-47. (12)	2. Remove spools, check for straigntness, varnish deposits and sharp corners. Replace if damaged, Figure D-47. (12)

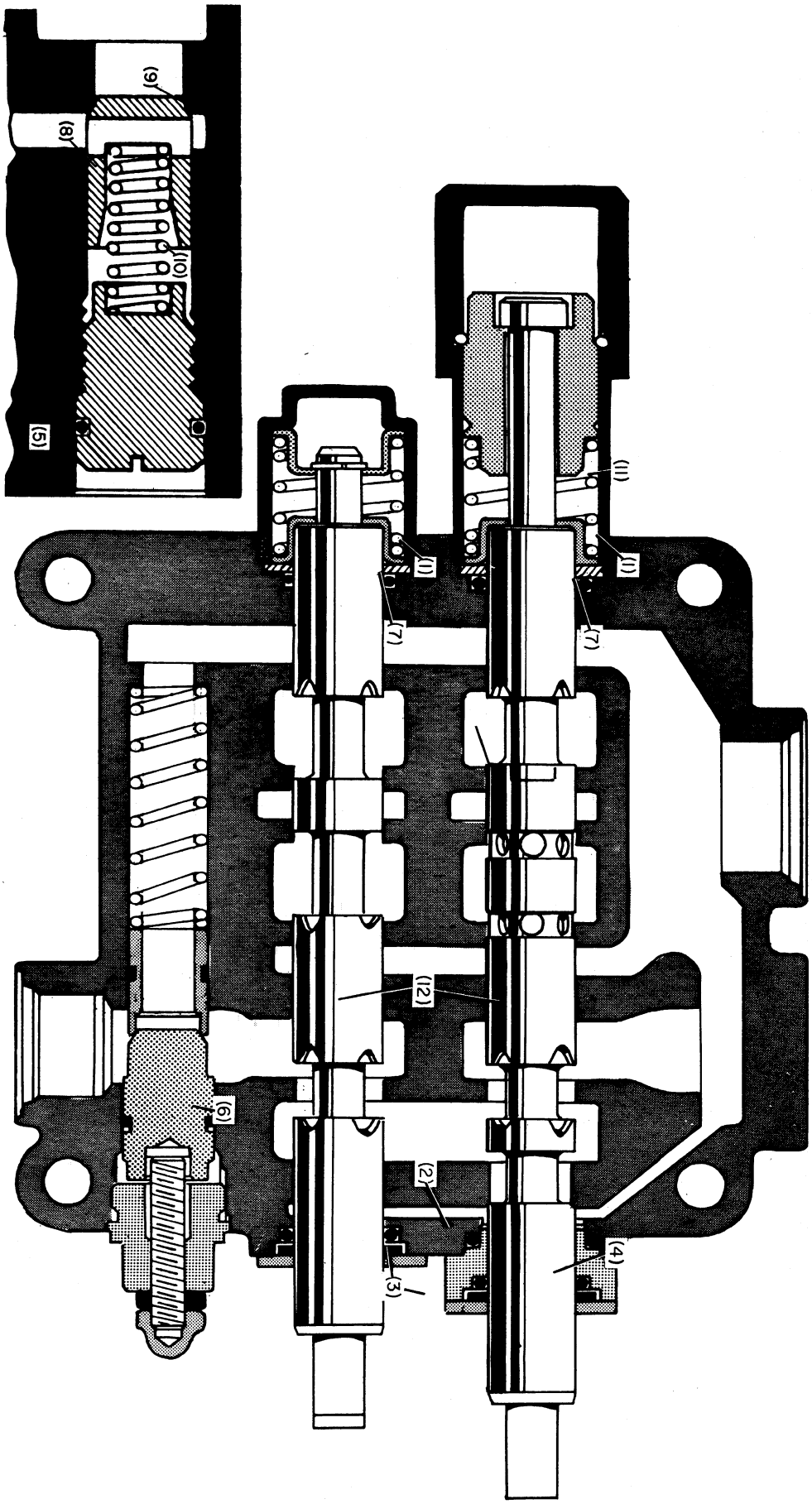

Figare D-47

PRESSURE RELIEF VALVE ADJUSTMENT FOR VDP-4 AND VY-5 HYDRAULIC CONTROL VALVE

The Pressure Relief Valve used in either the VDP-4 or the VY-5 Hydraulic Control Valve is adjustable so as the right pressure setting can be obtained. After the control valve assembly has been serviced and reinstalled on the loaders, it must be adjusted to the right pressure setting.

To install the pressure gauge for checking the loader hydraulic system preceed as follows:

1. Rest the loader bucket flat on the ground or floor.

2. Shut off the engine and relieve the hydraulic pressure in the lines by working both control levers back and forth several times, Figure D-45.

3. Adjustment of the relief valve is the same on both VDP-4 and VY-5 Control Valve Assemblies. The point at which the pressure gauge is installed is the only difference.

NOTE: On W-9 Loaders only - remove the small pipe plug as shown in Figure D-48. Then install either the 4501AA or the D22791 Pressure Gauge as shown in Figure D-49.

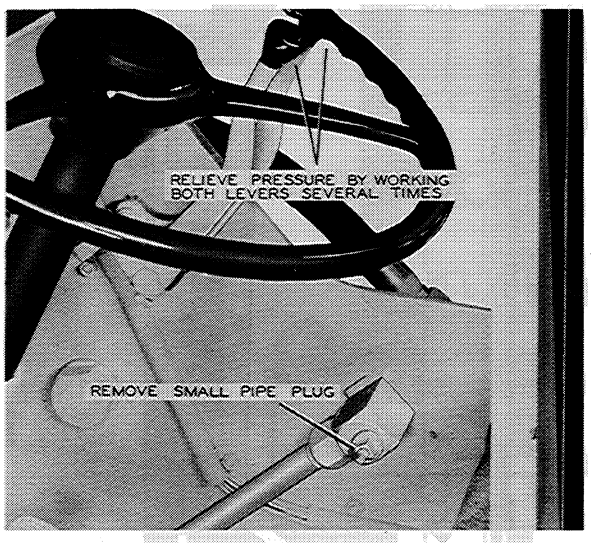

Figure D-48

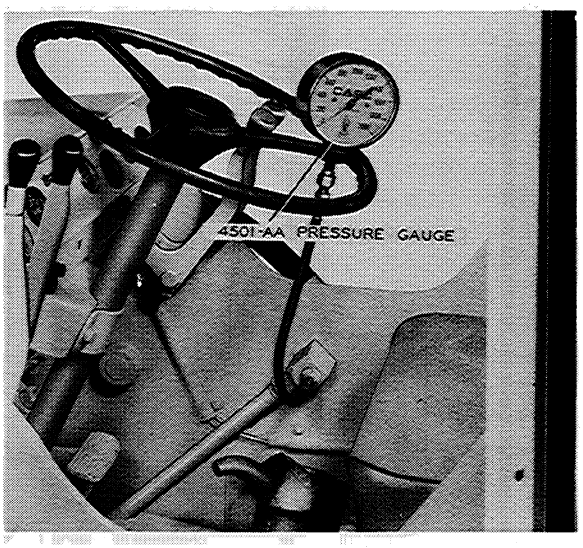

Figure D-49

The 4501AA or the A22791 Pressure Gauge that can be used on all Case 4 Wheel Drive Unit Loaders is available at your Case Branch.

NOTE: On W-9A, W-10 and W-12 Loaders, remove the pipe plug from the control valve as shown in Figure D-50 and install either the 4501AA or the A22791 Pressure Gauge.

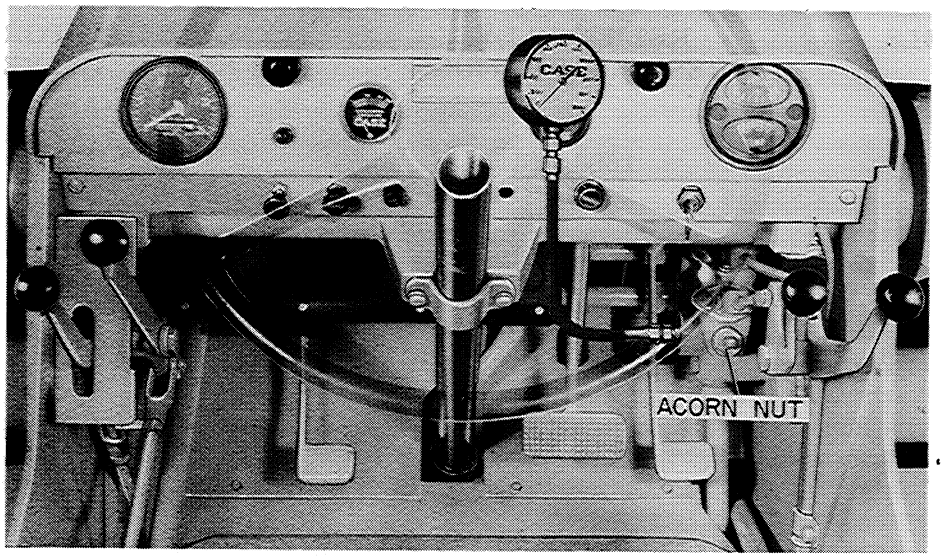

Figure D-50

PRESSURE CHECK AND ADJUSTING PROCEDURE - ALL UNIT LOADERS

1. Start the engine and run it at approximately 1000 RPM. Slowly pull the tilt control lever rearward until the bucket is tilted all the way back and the pressure relief valve is forced open.

2. Continue holding the tilt control lever rearward and gradually increase the engine speed to 1500 RPM.

3. Observe the pressure gauge reading. The pressure gauge should register at the correct pressure. Refer to Page D-30. If the pressure gauge registers above or below the correct pressure setting the pressure relief valve must be adjusted.

4. To adjust the pressure relief valve, remove the acorn nut and loosen the lock nut, Figure D-51. Turn the adjusting screw in or out to obtain the right pressure setting.

5. After the right pressure relief valve setting is obtained, rest the loader bucket flat on the ground or floor and shut off the engine.

6. Relieve hydraulic pressure in the system by working both control levers back and forth several times.

7. Remove the pressure gauge and install the pipe plug.

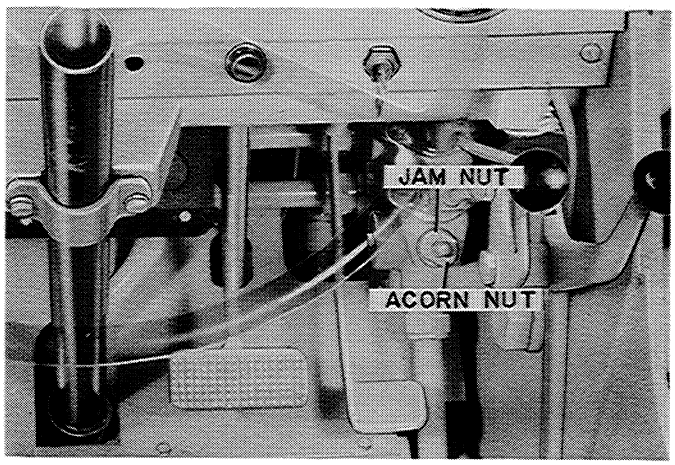

Figure D-51

8. Start the engine, bleed the hydraulic system by working both the lift and tilt control levers through several full raising and lowering cycles, and through several full tilt up and tilt down cycles. Check the oil level in the hydraulic reservoir and add oil if necessary.

Relief Valve Pressure Settings

LOADER MODELS	RELIEF VALVE PRESSURE SETTINGS	ENGINE RPM FOR CHECKING RELIEF VALVE PRESSURE
W-9	1680 PSI	1500 RPM
W-9A	1680 PSI	1500 RPM
W-10	1900 PSI	1500 RPM
W-12	1980 PSI	1500 RPM

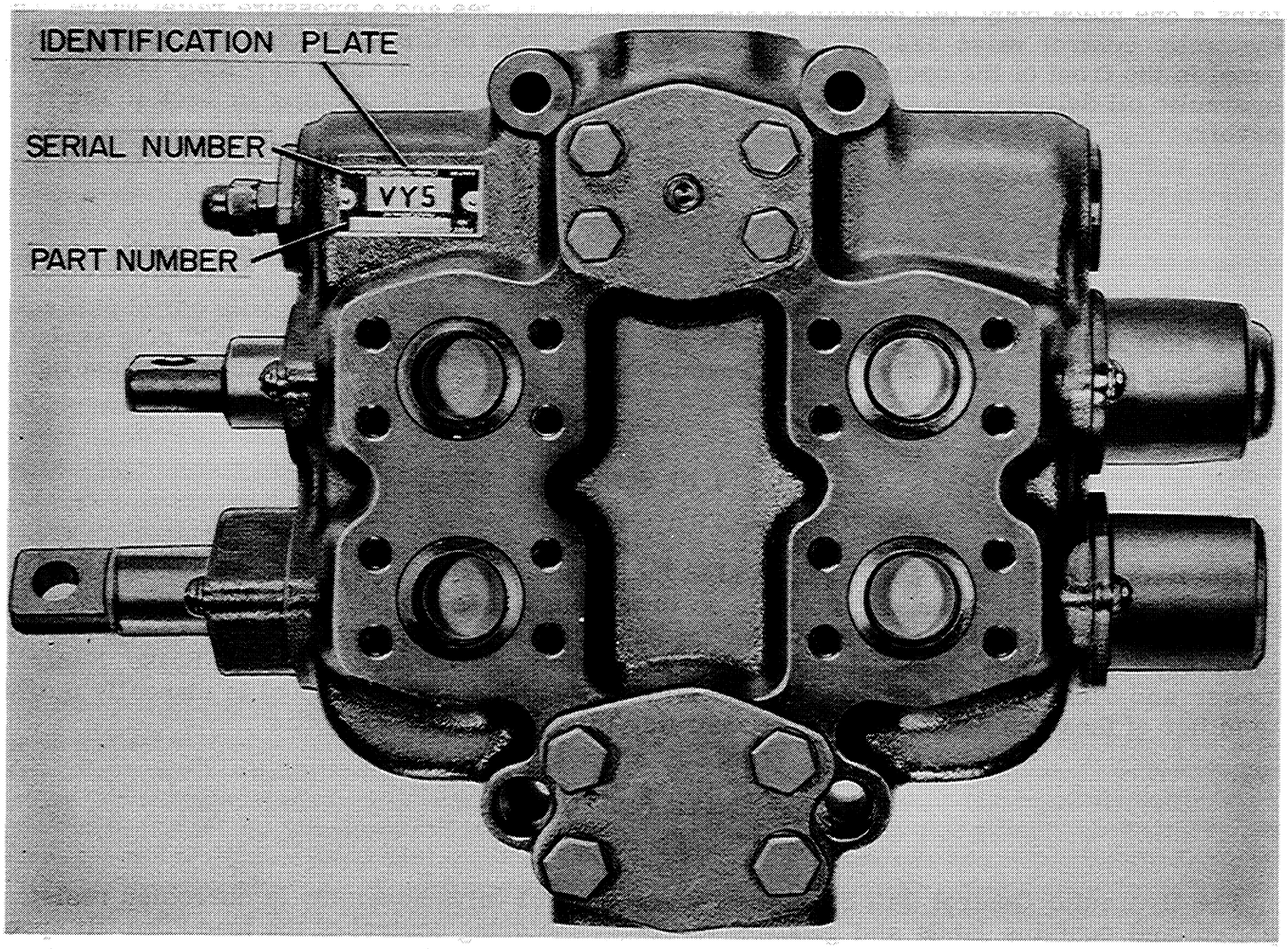

Figure D-52

INTRODUCTION

General

The VY-5 Hydraulic Control Valve Assembly used on Case 4 Wheel Drive Unit Loaders contains a one piece body, two control spools, drop check valves and a pressure relief valve. The hydraulic control valve assembly is located in the front of the loader on the right hand side panel in the front of the operator's cockpit. The hydraulic control valve assembly controls the hydraulic oil delivered by the pump to either the lift cylinders, tilt cylinder or back to the reservoir.

Construction Features

The Hydraulic Control Valve Body is constructed of a one piece casting with cored passages for a full parallel circuit. The body ports use split flange connections with "O" ring seals on the tubing for leak proof joints and to prevent possible distortion of the valve body when tightening the hydraulic lines to the valve body.

Lift Spool

The Hydraulic Control Lift Spool used in the control valve assembly is corrosion resistant plated and contains lands and grooves to obtain metering control of the load. The lift spool controls and directs the flow of pressurized hydraulic oil to the lift cylinders as well as redirecting the oil back to the reservoir. The lift spool is a four position spool, Raise, Neutral, Lower and Float and is detent retained in all four positions. The lift spool is manually moved to either of these four positions by the operator from the loader cockpit.

Tilt Spool

The Hydraulic Control Tilt Spool used in the control valve assembly is corrosion resistant plated and contains lands and grooves to obtain metering control of the load. The tilt spool controls and directs the flow of pressurized hydraulic oil to the tilt cylinders as well as back to the reservoir. The tilt spool is a three position spool, Tilt up, Neutral and Tilt down and is automatically returned to neutral by a centering spring.

Relief Valve

The Pressure Relief Valve is located in the control valve assembly to prevent excessive oil pressure build up in the hydraulic system. The pressure relief valve is adjustable so that the right pressure setting can be obtained whenever the relief valve is serviced, cleaned, inspected or replaced.

Drop Check Valves

The function of the drop check valves is to prevent hydraulic oil from flowing back to the pump as the spools are moved from or through the neutral position.

VY-5 HYDRAULIC CONTROL VALVE

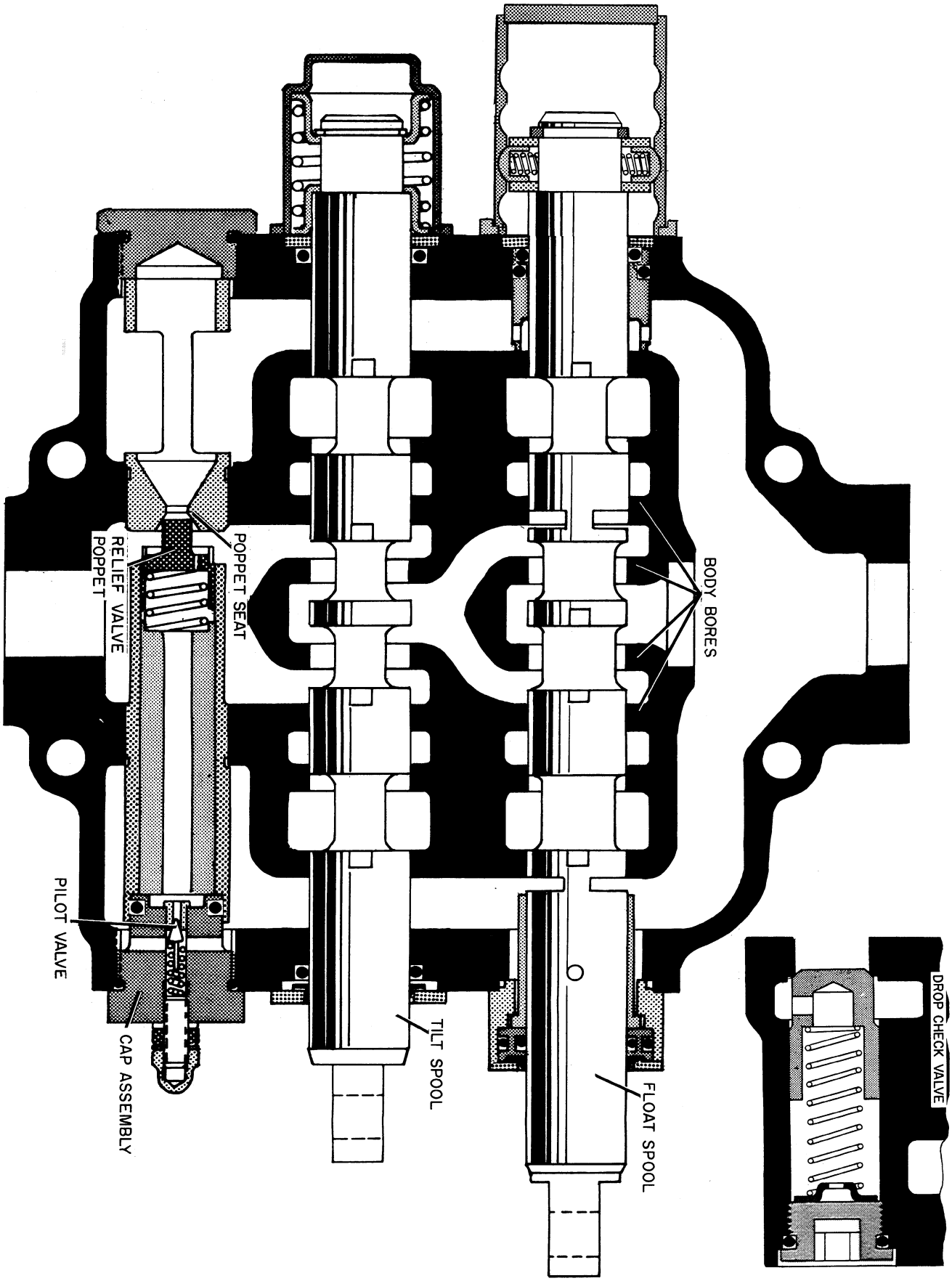

Figure D-53

REMOVAL OF THE VY-5 HYDRAULIC CONTROL VALVE FROM THE LOADER

Before removing the VY-5 Hydraulic Control Valve from the loader, the loader must be on a level surface with the bucket resting flat on the ground or floor. Shut the engine off, then move both the hydraulic control levers back and forth several times to relieve the hydraulic pressure built up in the lines. Now remove both of the front plates and thoroughly steam clean the hydraulic control valve including the area around the hydraulic control valve. Steam cleaning will help prevent dirt from entering the hydraulic system during removal. Drain the hydraulic reservoir.

REMOVAL

1. Loosen the return line hose clamps and remove the return line hose, Figure D-54. Remove the capscrews and split flange from the control valve, Figure D-54. Now remove the return line.

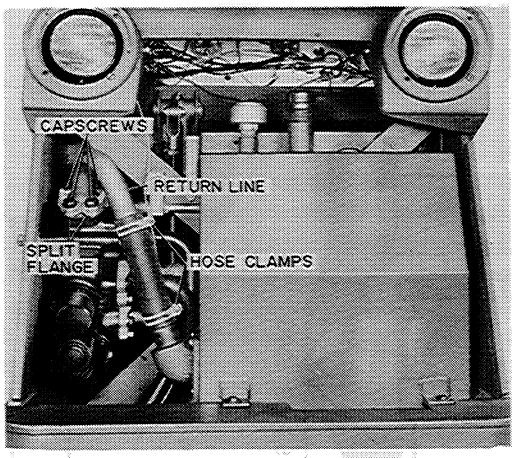

Figure D-54

2. Remove the capscrews and split flanges from the four hydraulic pressure lines on the side of the control valve, Figure D-55.

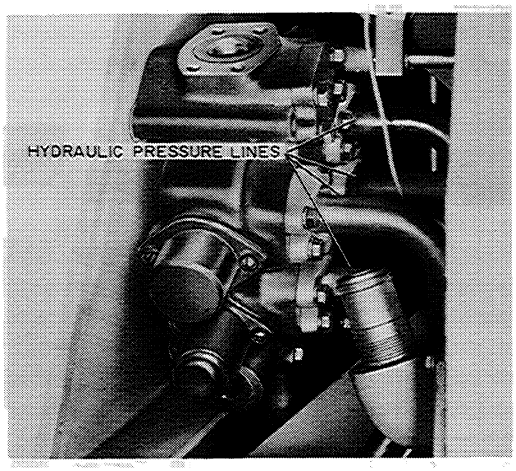

Figure D-55

3. Working from inside the loader cockpit, disconnect the control lever linkage from the control spools. Figure D-56. Remove the high pressure hydraulic inlet line from the bottom of the control valve.

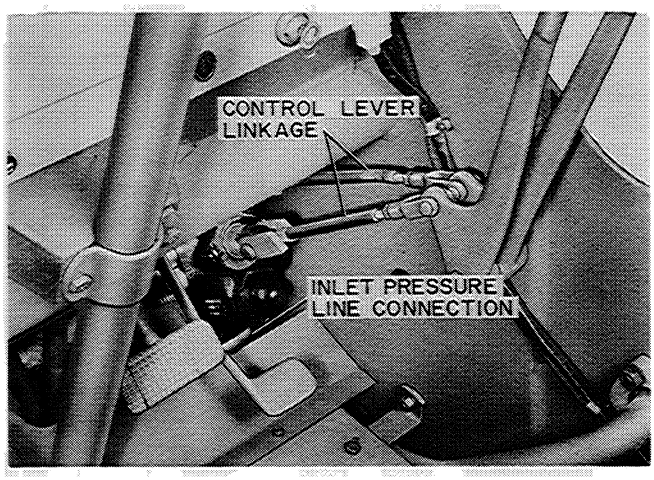

Figure D-56

4. Disassemble the control valve from the loader side panel by removing the 1/2" x 5-1/2" bolts that hold the valve in place. The control valve can now be moved forward and out of the loader chassis.

IMPORTANT

After the hydraulic control valve assembly has been removed from the loader, all the hydraulic lines must be covered to prevent dirt from entering the system.

DISASSEMBLY OF THE VY-5 HYDRAULIC CONTROL VALVE

GENERAL

With the hydraulic control valve removed from the loader it can be easily disassembled, cleaned, inspected and serviced. Before starting to disassemble the hydraulic control valve make sure the exterior of the valve body is clean, especially in the area that is to be disassembled. Make sure that all parts are clearly tagged so that when used in reassembly they can be returned to their respective places. Switching spools may reduce clearance and cause the spools to stick or bind, or on the other hand, it may increase clearances causing excessive leakage.Switching drop check valves may cause improper seating or sticking. Discard all "O" rings, gaskets and wipers and replace with new parts when reassembling the control valve.

DISASSEMBLY PROCEDURE

1. Remove the screws that hold the float spool and tilt spool end caps to the valve body, Figure D-57.

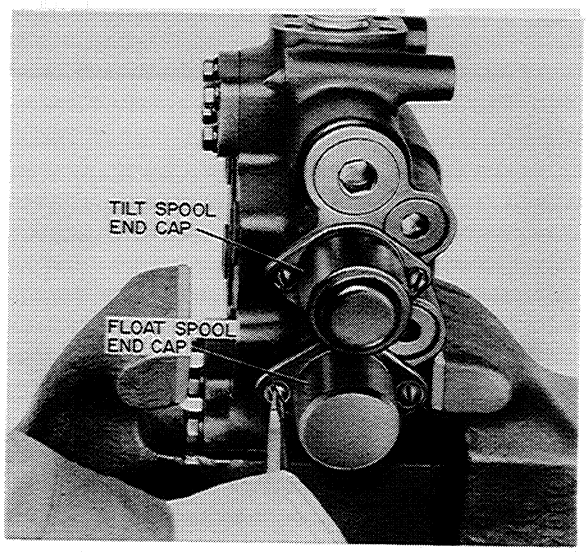

Figure D-57

2. To remove the float spool, pull outward as shown in Figure D-58.

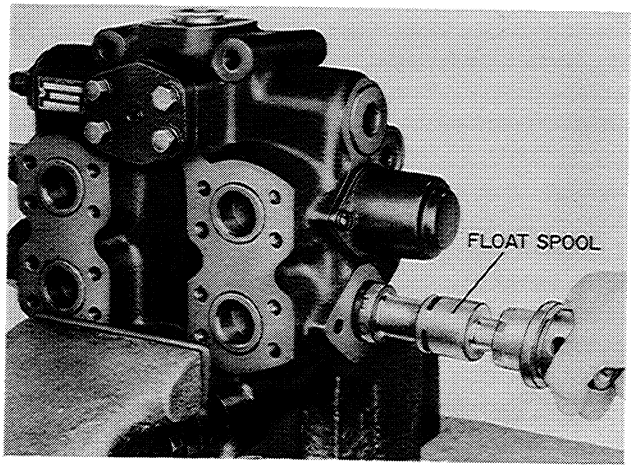

Figure D-58

3. To remove the tilt spool, grasp the centering spring and pull outward as shown in Figure D-59.

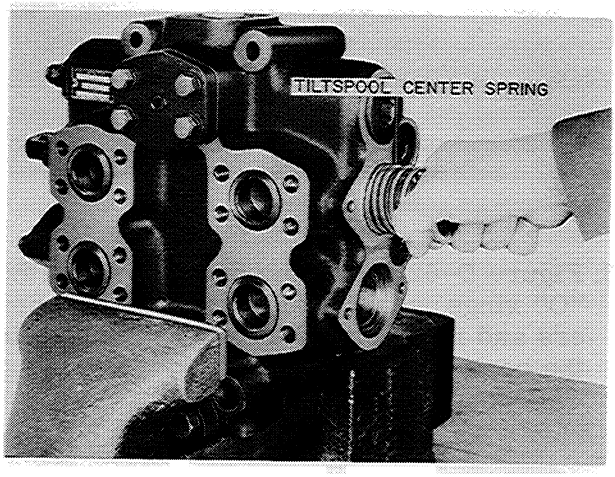

Figure D-59

4. Place the eye end of the float spool in a soft jawed vice. Using a Kent Moore No. J8059 Snap Ring Pliers or equivalent, remove the snap ring from the end of the float spool, Figure D-60.

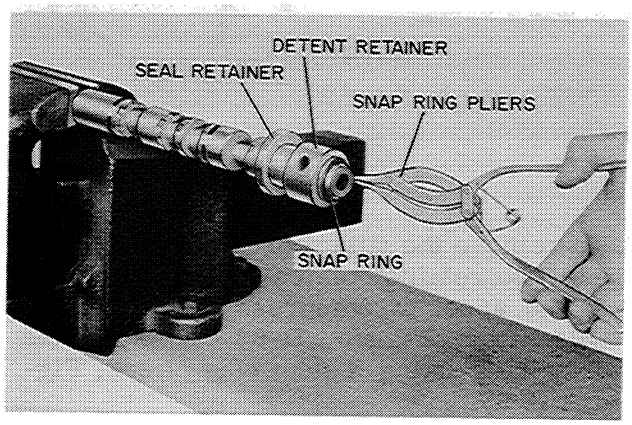

Figure D-60

5. Remove the screws that hold the retainer plates to the control valve body, Figure D-61. Then remove the retainer plates, wipers, retainers "O" rings, seal housing and "O" ring.

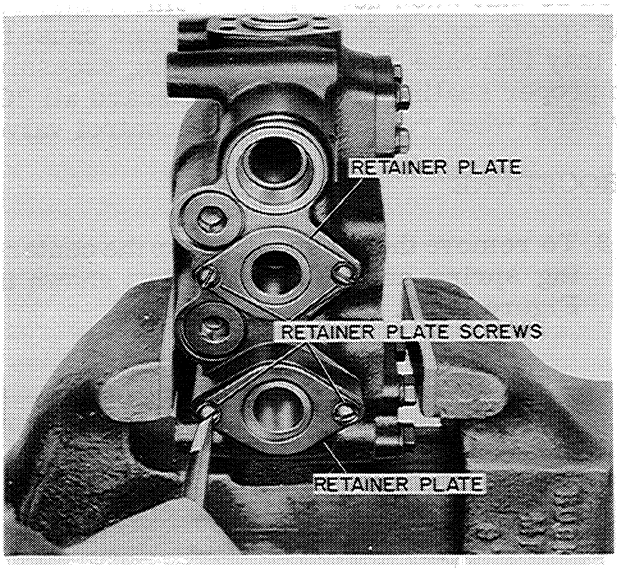

Figure D-61

6. Figure D-62 shows the order in which the "O" rings, seal housings, retainers, wipers and retainer plates are assembled in the control valve body.

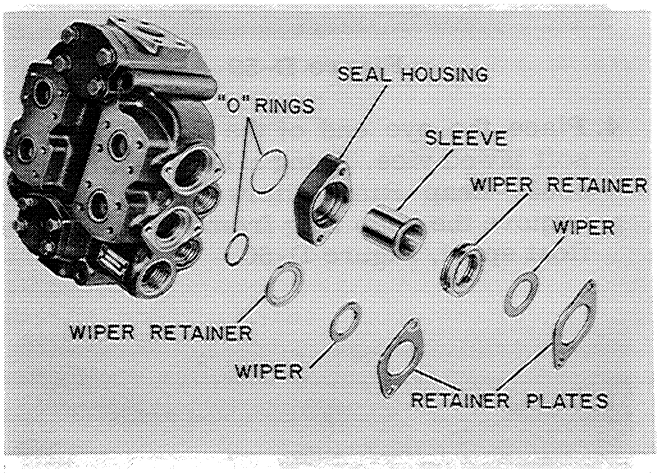

Figure D-62

7. To remove the tilt spool centering spring, use two retainer plates from the eye end of the spool to compress the spring as illlstrated, Figure D-63. Remove the snap ring using a snap ring pliers, Figure D-63.

Caution must be taken when loosening the nuts until all of the spring pressure is released.

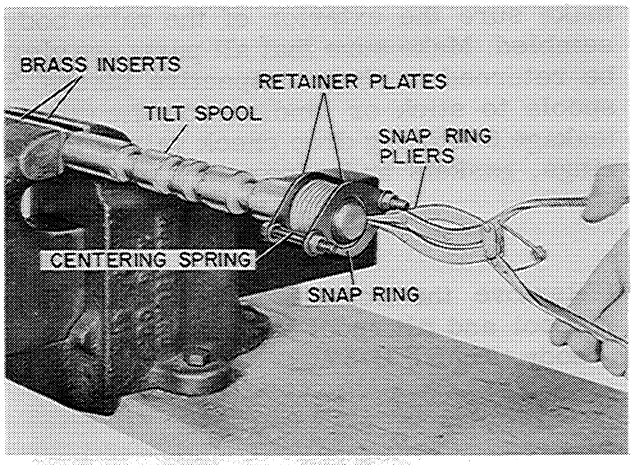

Figure D-63

REMOVAL OF THE RELIEF VALVE

1. Remove the acorn nut from the relief valve and loosen the jam nut. Turn the relief valve adjusting screw out until the spring tension is released, Figure D-64.

2. Remove the relief valve cap containing the relief valve adjusting screw, using a 1-7/8" wrench, Figure D-64.

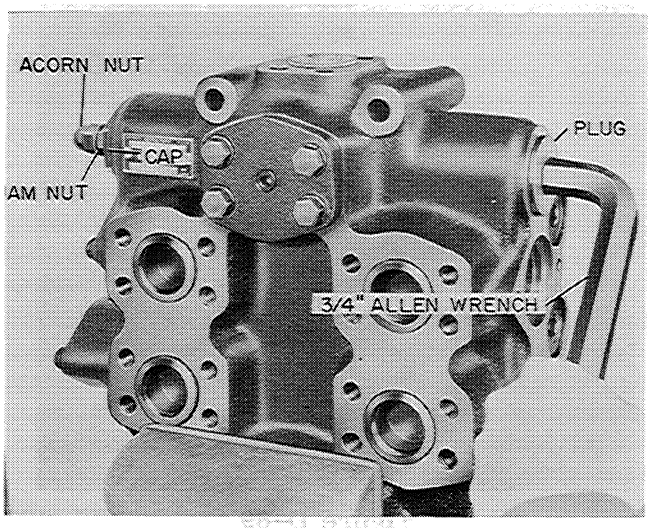

Figure D-64

3. Remove the plug at the opposite end of the relief valve using a 3/4" Allen wrench, Figure D-64.

4. The relief valve seat and relief valve sleeve are held in the valve body by a slight press fit.

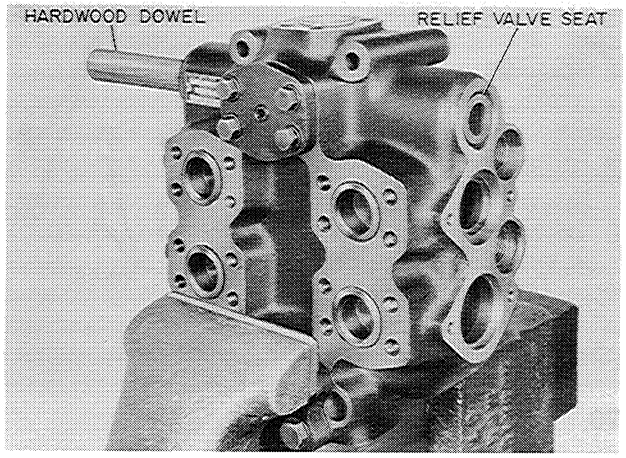

Figure D-65

5. Remove the relief valve seat by first placing a 1-1/16" hard wood dowel in through the valve body as shown in Figure D-65. Tap lightly with a rawhide hammer to remove the valve seat.

6. Remove the relief valve sleeve by placing a 1-3/8" hard wood dowel in through the valve body as shown in Figure D-66. Tap lightly with a rawhide hammer to remove the valve sleeve.

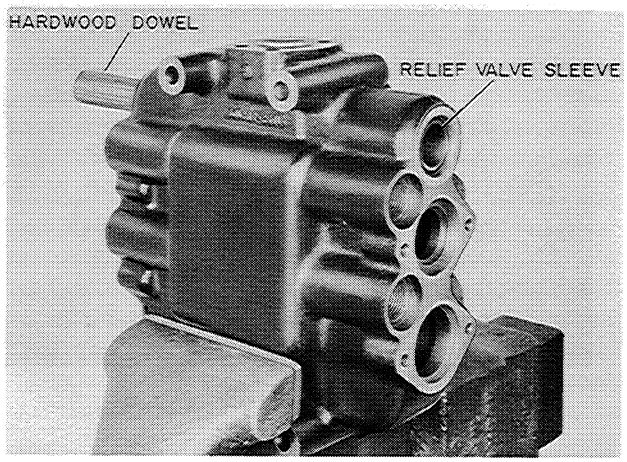

Figure D-66

7. Figure D-67 shows the order in which the relief valve is assembled in the control valve body.

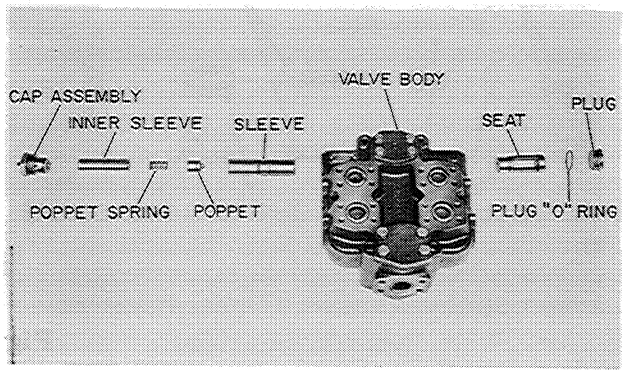

Figure D-67

REMOVAL OF THE DROP CHECK VALVES

1. Remove the drop check valve caps, shown in Figure D-68 and D-69, using a 5/8" Allen wrench. There are four drop check valves used in the VY-5 control valve assembly, two at each end as shown in Figures D-68 and D-69. Now remove the poppet springs and poppets. A soft wire with a smooth hook end may be used if necessary to remove the poppet spring and poppet.

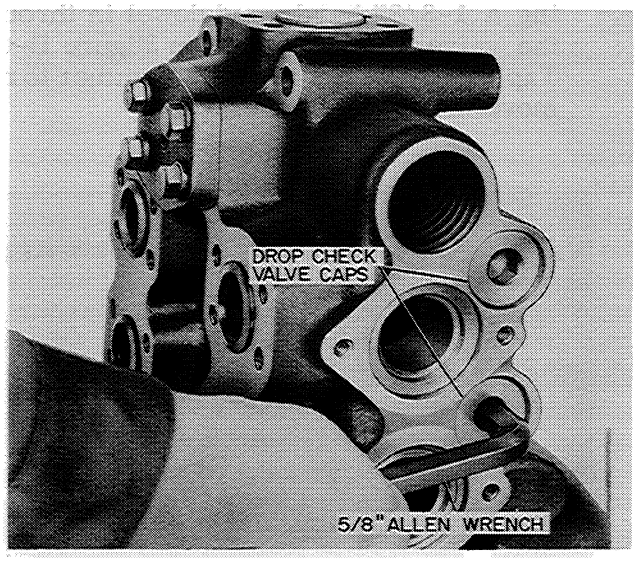

Figure D-68

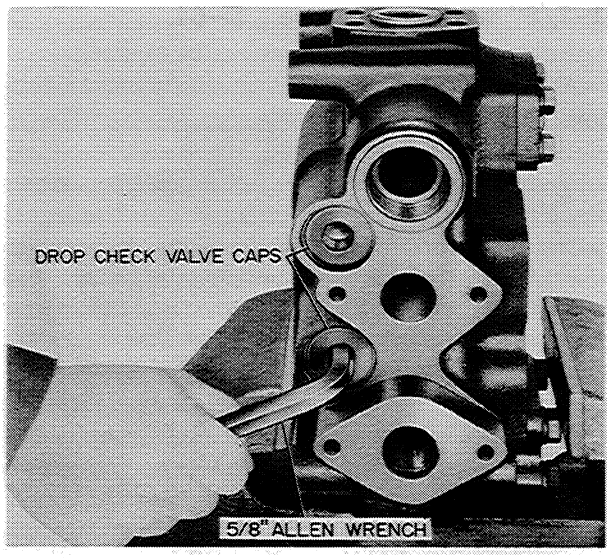

Figure D-69

2. Figure D-70 shows the order in which the drop check valves are assembled in the control valve body.

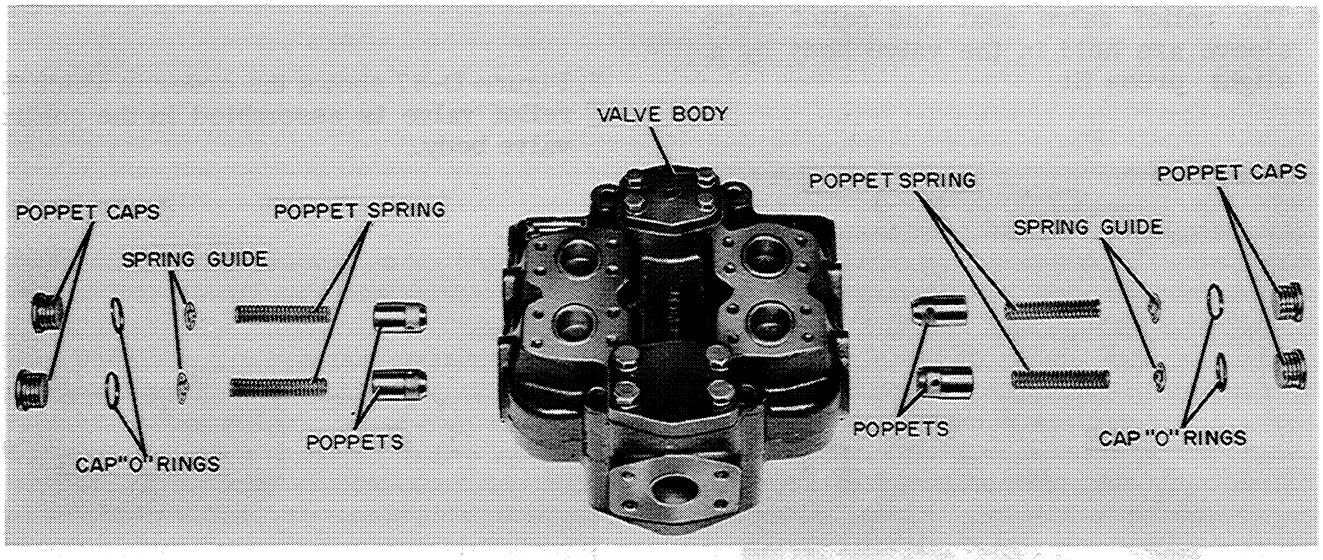

Figure D-70



be careful . . . avoid accidents

INSPECTION OF THE VY-5 CONTROL VALVE PARTS

Whenever the hydraulic control valve is disassembled for servicing - inspect all the component parts and replace any that are found to be worn or damaged. Discard all "O" rings, gaskets and wipers. Replace with new parts for reassembly.

Before starting to inspect the component parts of the hydraulic control valve, all parts must be washed thoroughly in a solvent such as mineral spirits.

Control Valve Body

Inspect the valve body bores for grooves, deep scratches or excessive wear, If the valve body is damaged or has cracks or scored bores the control valve will have to be replaced.

Float Spool

Inspect the float spool for grooves, deep scratches or excessive wear. Place the float spool in its respective body bore. It should fit using a slight hand pressure. If the spool is loose, scored or damaged it must be replaced.

Tilt Spool

Inspect the tilt spool for grooves, deep scratches and excessive wear. Place the tilt spool into its respective body bore. It should fit using a slight hand pressure. If the spool is loose, scored or damaged it must be replaced.

Drop Check Valves

Inspect the Drop Check Valve Poppet and its seating face in the valve body for grooves or defects which may cause leakage. Check the poppet for free movement in the valve body bore. If the poppet appears to be faulty it must be replaced.

Relief Valve

Inspect the relief valve seat and poppit for scoring which may cause improper seating of the poppet or allow leakage. Disassemble the relief valve cap assembly and inspect the small poppet valve for scoring. Replace if scored.

IMPORTANT

After all the component parts have been inspected and the control valve is not to be reassembled immediately, coat all reusable parts with hydraulic oil.

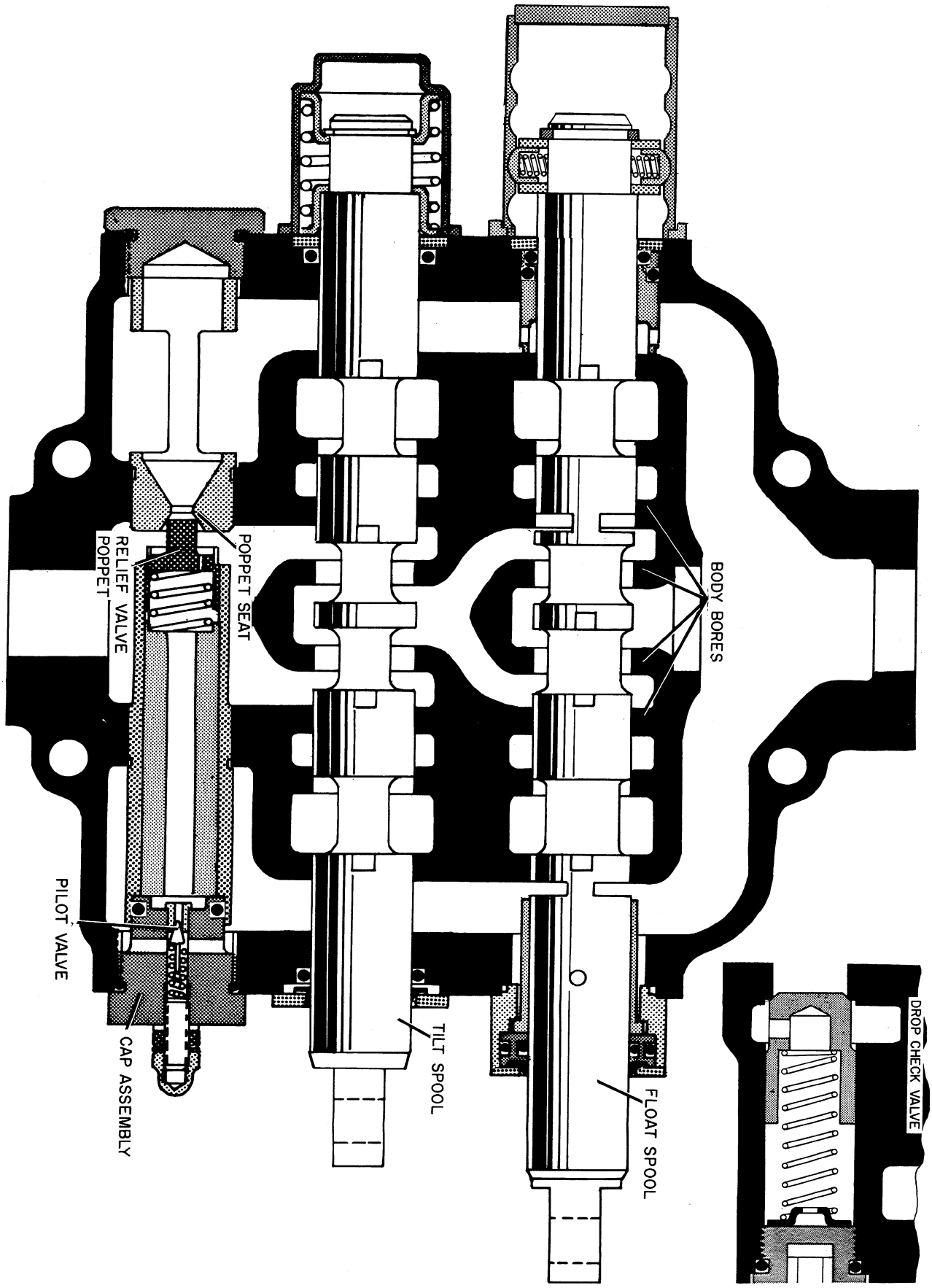
RELIEF VALVE POPPET
POPPET SEAT
BODY BORES
PILOT VALVE
CAP ASSEMBLY
TILT SPOOL
FLOAT SPOOL
DROP CHECK VALVE

Figure D-71

ASSEMBLY OF THE VY-5 HYDRAULIC CONTROL VALVE

Prior to reassembly of the hydraulic control valve, make sure that the bench tools and all valve parts are clean. If necessary,rewash all valve parts before assembly. Coat all the valve parts with hydraulic oil before installing them in the valve body.

TILT SPOOL

1. To reassemble the Tilt Spool,place a retainer plate, spring retainer, centering spring, spring retainer and retainer plate over the end of the Tilt Spool. Compress the centering spring as shown in Figure D-72. Then install a new snap ring. Make sure the snap ring is fully seated in the groove. Now remove the spring compressing device. Then install the "O" ring retainer and "O" ring over the eye end of the Tilt Spool. Care must be taken to prevent cutting the "O" ring.

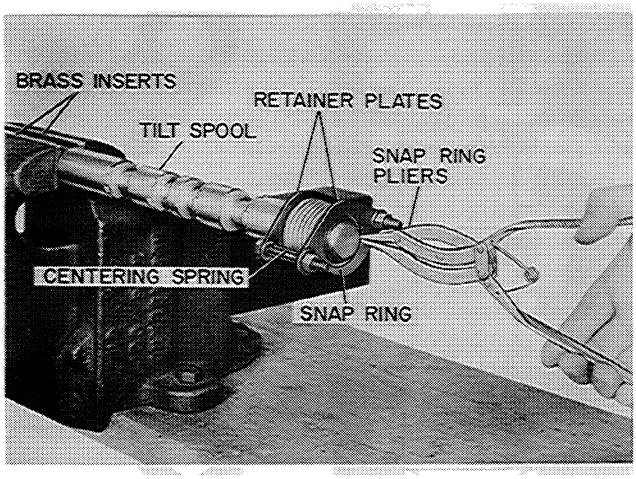

Figure D-72

2. Insert the Tilt Spool Assembly into the valve body and install the Tilt Spool End Cap as shown in Figure D-73.

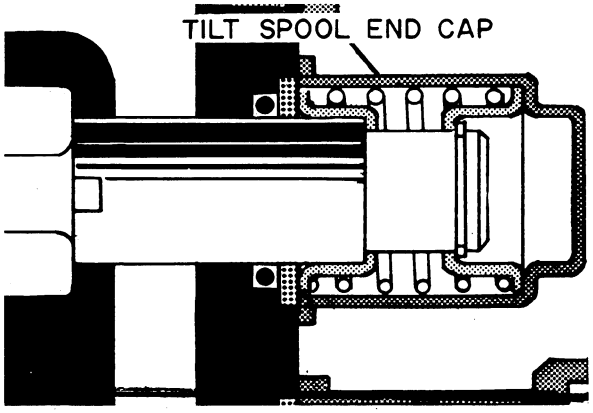

Figure D-73

3. Install the "O" ring, "O" ring retainer, wiper and retainer plate in the order shown in Figure D-74, over the eye end of the Tilt Spool. Install the retainer plate screws and wahsers.

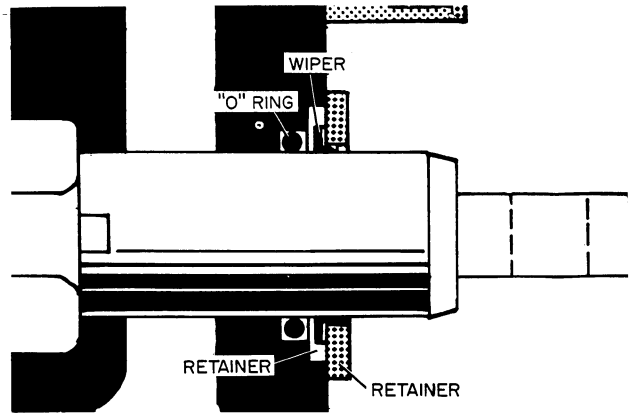

Figure D-74

FLOAT SPOOL

1. To assemble the float spool assembly place an "O" ring, seal retainer and detent retainer on the end of the float spool, Figure D-75. Then install the snap ring Figure D-75.

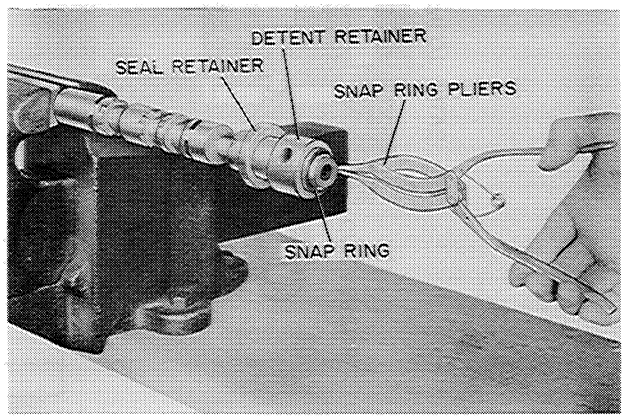

Figure D-75

2. Insert the Float Spool into the valve body and install the detent poppets and springs, Figure D-76. Then install the float spool end cap as shown in Figure D-76.

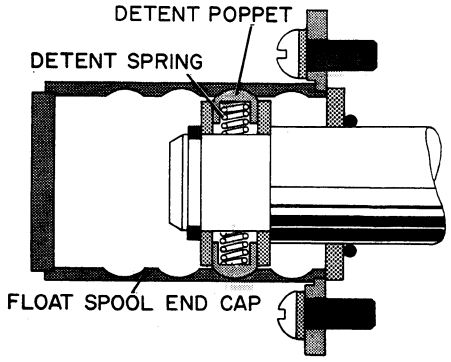

Figure D-76

3. Install the large "O" ring over the eye end of the lift spool and into the valve body, Figure D-77. Now install seal housing, sleeve, "O" ring retainer, wiper and retainer plate, Figure D-77. Then install the retainer plate screws.

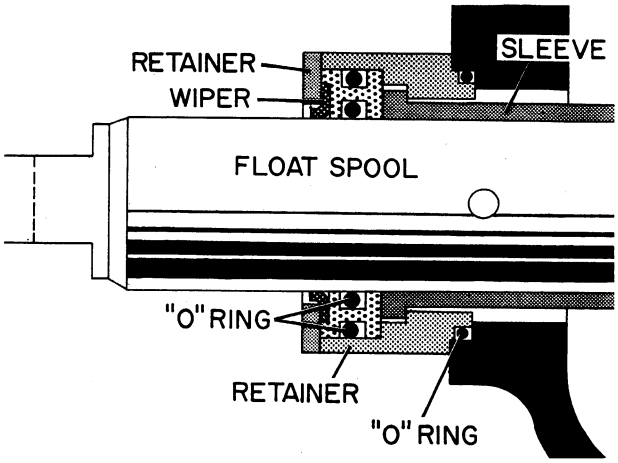

Figure D-77

INSTALLATION OF THE DROP CHECK VALVES

1. When installing the drop check valves be sure they are returned to their respective body bores. Install the valve poppet, poppet spring and cap as shown in Figure D-78. Tighten the cap until it bottoms in the valve body.

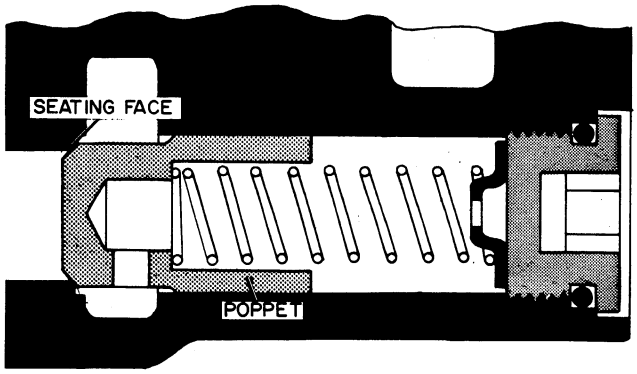

Figure D-78

INSTALLATION OF THE PRESSURE RELIEF VALVE

1. Install the relief valves sleeve, using a 1-3/8" hard wood dowel. Tap the sleeve in until seated in the valve body, Figure D-79.

2. Install the relief valve seat using a 1-3/8" hard wood dowel. Tap the seat in until seated in the valve body, Figure D-80.

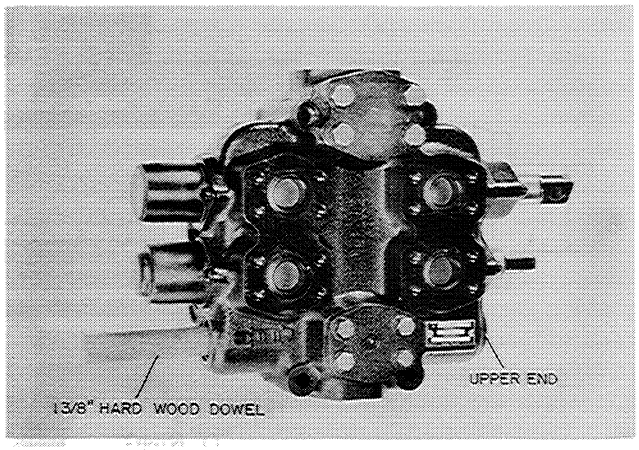

Figure D-79

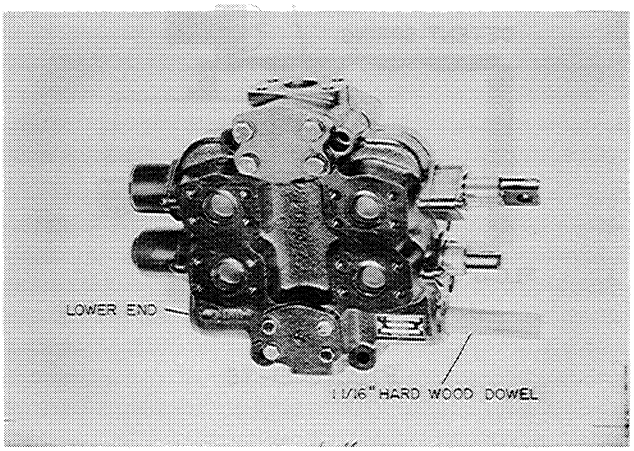

Figure D-80

3. Install the seat plug using a 3/4" Allen wrench after the seat is installed.

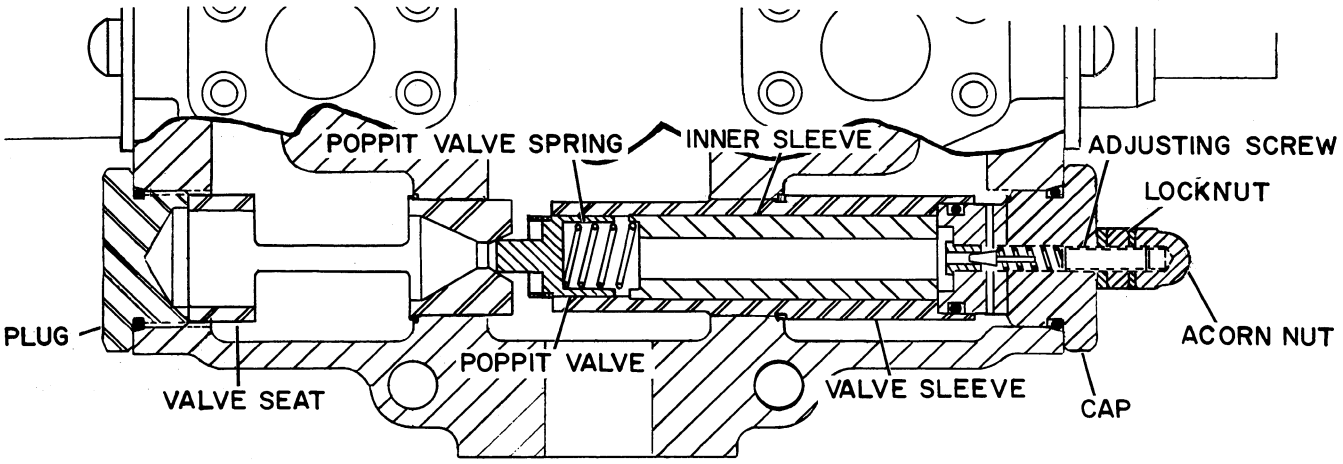

Figure D-81

4. Install the relief valve poppet, poppet spring, and inner sleeve as shown in Figure D-81. Then install the relief valve cap assembly containing the small poppet valve, adjusting screw, lock nut and acorn nut, Figure D-81.

INSTALLATION OF THE VY-5 HYDRAULIC CONTROL VALVE

After the hydraulic control valve is reassembled it can be reinstalled in the loader and checked for leakage. Also, the pressure relief valve must be set at the right pressure setting. Just before installing the hydraulic control valve, remove all the covers from the hydraulic system.

INSTALLATION

1. Slide the control valve assembly into the front of the loader and install the 1/2" x 5-1/2" bolts that hold the control valve to the loader side panel.

2. Connect the four hydraulic lines to the side of the control valve, Figure D-82.

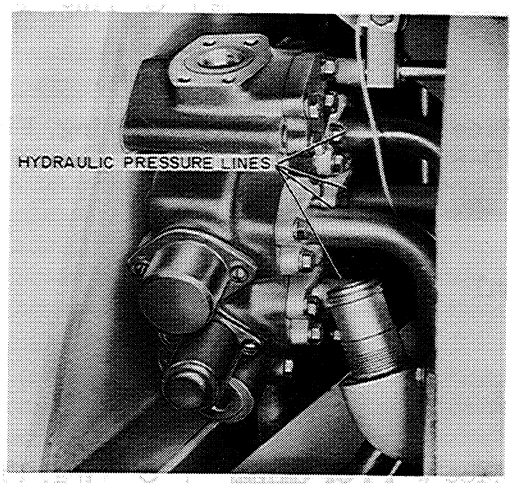

Figure D-82

3. Install the hydraulic oil return line and hose, Figure D-83. Install the split flange on the return line and install the cap screws, Figure D-83.

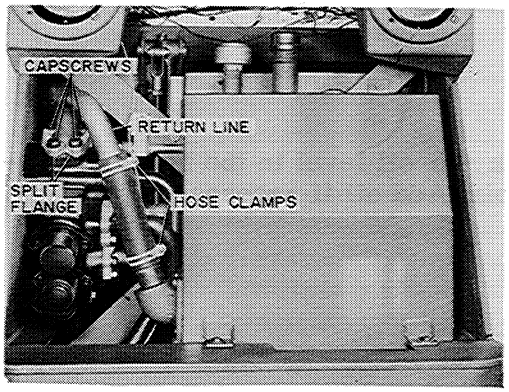

Figure D-83

Then tighten the hose clamps, Figure D-83.

4. Working from inside the loader cockpit, connect the control lever linkage, Figure D-84. Working from underneath, connect the inlet pressure line shown in Figure D-84.

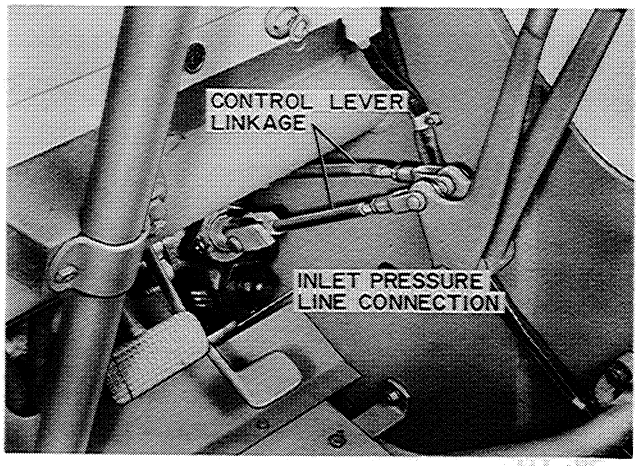

Figure D-84

NOTE

After the hydraulic control valve has been installed and connected to the hydraulic system, fill the reservoir with clean 10 W oil. Start the engine, bleed the hydraulic system by working both the lift and tilt control levers through several full raising and lowering cycles, and through several full tilt up and tilt down cycles. Check the oil level in the hydraulic reservoir and add oil if necessary. When raising and lowering the bucket, check the control valve for leakage, also during the tilt up and tilt down cycles.

SERVICE SUGGESTIONS VY-5 HYDRAULIC CONTROL VALVE

Oil Leakage, External

CAUSE	REMEDY
1. External oil leakage between valve body and spool end caps because end caps are not tight, Figure D-85. (1)	1. Tighten the spool end caps, Figure D-85. (1)
2. External oil leakage between valve body and float spool housing due to damaged "O" ring, Figure D-85. (2)	2. Replace worn or damaged "O" ring, Figure D-85. (2)
3. External oil leakage between valve body and spool retainer plate due to loose retainer plate screws, Figure D-85. (3)	3. Tighten retainer plate screws, Figure D-85. (3)
4. External oil leakage around poppet valve caps due to damaged "O" ring, Figure D-85. (4)	4. Replace worn or damaged "O" ring, Figure D-85. (4)
5. External oil leakage around the pressure relief valve cap due to damaged "O" ring, Figure D-85. (5)	5. Replace worn or damaged "O" ring, Figure D-85. (5)

Oil Leakage, Internal

CAUSE	REMEDY
1. Internal oil leakage between spool and wiper due to damaged "O" ring, Figure D-85. (6)	1. Replace worn or damaged "O" ring, Figure D-85. (6)
2. Internal oil leakage into the spool end caps due to damaged "O" ring, Figure D-85. (7)	2. Replace worn or damaged "O" ring, Figure D-85. (7)

Slow Or Jerky Action Of Hydraulic System

CAUSE	REMEDY
1. Air in the hydraulic system.	1. Check the oil level in the hydraulic reservoir. Add oil if necessary.

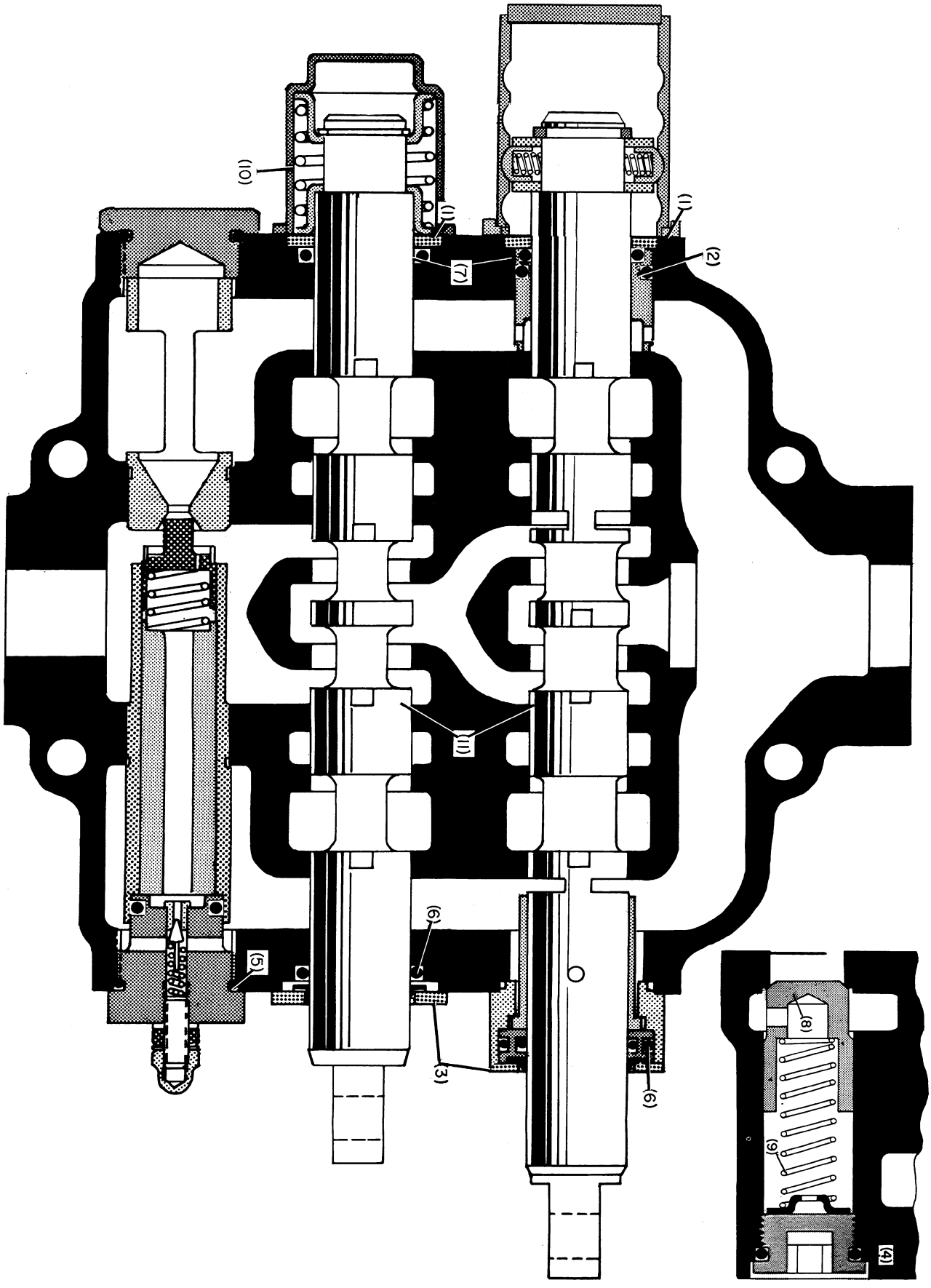

Figure D-85

NOTE; The CASE CORPORATION reserves the right to make improvements in design or changes in specifications at any time without incurring any obligation to install them on units previously sold.

SECTION

DD

SERVICING THE VDP-14 HYDRAULIC CONTROL VALVE ON CASE 4 WHEEL DRIVE UNIT LOADERS

Rac. Form 9-74561 Section DD 2000 9-62 PRINTED IN U.S.A.

TABLE OF CONTENTS

INTRODUCTION . . . . . DD-4 thru DD-5

SPECIFICATIONS DD-6

REMOVAL AND INSTALLATION OF THE CONTROL VALVE DD-7

- Removal and Disassembly of the Float Lift Spool . . . . . DD-8 and DD-9
- Removal and Disassembly of the Tilt and or Auxiliary Spool . . . DD-9 and DD-10
- Removal of the Relief Valve DD-11
- Removal of the Check Valves DD-12

INSPECTION . . . . . DD-13 thru DD-15

ASSEMBLY OF THE CONTROL VALVE . . . . . DD-16 thru DD-18

- Assembly and Installation of Either the Tilt or Auxiliary Spool DD-16
- Assembly and Installation of the Float Lift Spool DD-17
- Installation of the Float Lift Spool End Seals DD-18
- Installation of the Pressure Relief Valve. DD-18
- Installation of the Drop Check Valves DD-18

RELIEF VALVE PRESSURE CHECK DD-19

SERVICE SUGGESTIONS . . . . . DD-20 thru DD-23

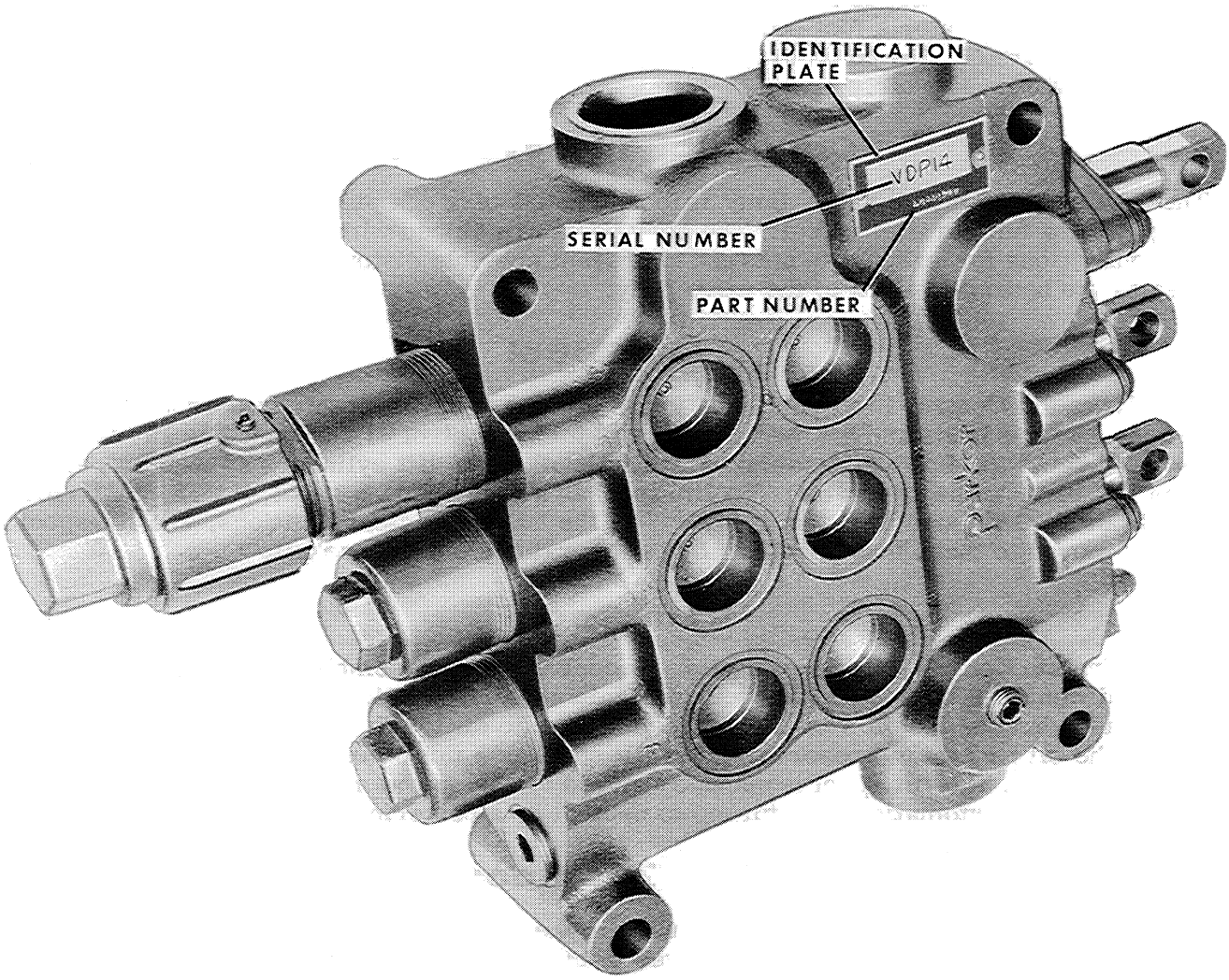

Figure DD-1. VDP-14 Three Spool Control Valve

INTRODUCTION

General

The Hydraulic Control Valve Assembly used on Case 4 Wheel Drive Unit Loaders contains a one piece body, three control spools, check valves and a pressure relief valve. The hydraulic control valve assembly is located in the front of the loader on the right hand side panel at the front of the operator's foot board. The hydraulic control valve assembly controls the hydraulic oil delivered by the pump to either the lift cylinders, tilt cylinders, auxiliary cylinders or back to the reservoir.

Construction Features

The Hydraulic Control Valve Body is constructed of a one piece casting cored to contain passages for a full parallel circuit. The body ports are tapped with SAE straight threaded "O" ring connections for leak proof joints and to prevent possible distortion of the valve body when tightening the hydraulic lines to the valve body.

Lift Spool

The Hydraulic Control Lift Spool used in the control valve assembly is corrosion resistant plated and contains lands and grooves to obtain metering control of the load. The lift spool controls and directs the flow of pressurized hydraulic oil to the lift cylinders as well as redirecting the oil back to the reservoir. The lift spool is a four position spool, RAISE, NEUTRAL, LOWER and FLOAT and is detent retained in the raise and float positions. The lift spool is manually moved to these four positions by the operator from the cockpit.

Tilt Spool

The Hydraulic Control Tilt Spool used in the control valve assembly is corrosion resistant plated and contains lands and grooves to obtain metering control of the load. The tilt spool controls and directs the flow of pressurized hydraulic oil to the tilt cylinders as well as redirecting the oil back to the reservoir. The tilt spool is a three position spool, RAISE, NEUTRAL and LOWER. The tilt spool is manually moved by the operator to either the raise or lower position and is automatically returned to neutral by a centering spring.

Auxiliary Spool

The Hydraulic Control Auxiliary Spool used in the control valve assembly is corrosion resistent plated and contains lands and grooves to obtain metering control of the load. The auxiliary spool controls and directs the flow of pressurized oil to the auxiliary cylinders as well as redirecting the oil back to the reservoir. The auxiliary spool is a three position spool, EXTEND, NEUTRAL and RETRACT. The auxiliary spool is manually moved by the operator to either the extend or retract position and is automatically returned to neutral by a centering spring.

Relief Valve

The Pressure Relief Valve is located in the control valve assembly to prevent excessive oil pressure build up in the hydraulic system. The pressure relief valve is adjustable so that the right pressure setting can be obtained whenever the relief valve is serviced, cleaned, inspected or replaced.

Drop Check Valve

The function of the drop check valves, is to prevent hydraulic oil from flowing back to the pump as the spools are moved from or through the neutral position.

VDP-14 HYDRAULIC CONTROL VALVE

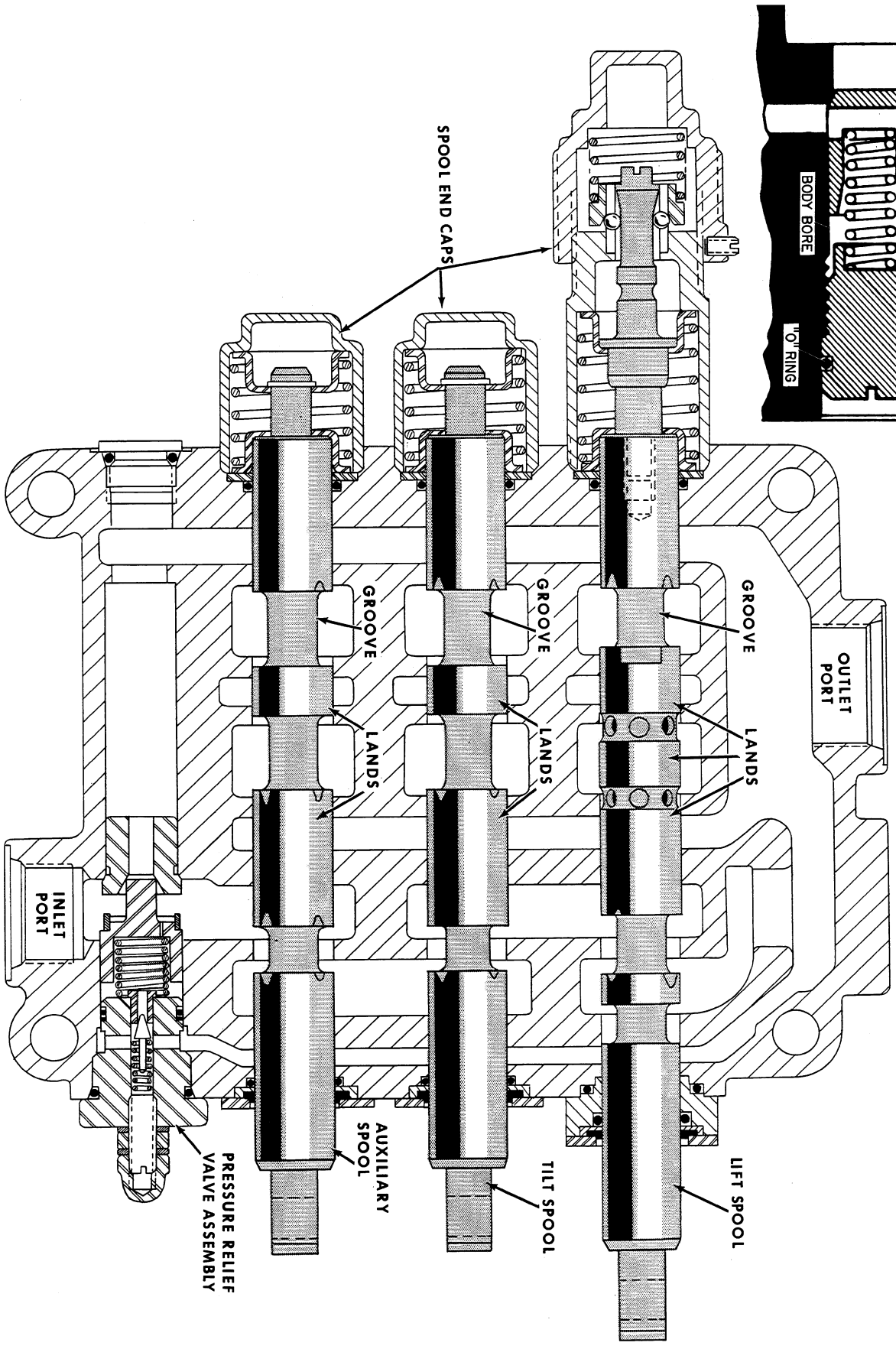

Figure DD-2

SPECIFICATIONS

Valve Body	Replaceable, One piece construction, 3 spool open center, parallel circuit.
Pressure Relief Valve	Replaceable, Adjustable and Hydraulically operated.
Float Lift Spool	Replaceable, Four position (Raise, Neutral, Lower and Float) Detent retained in Raise and Float.
Float Lift Spool Dimensions	Approximately 11-3/4 Inches.
Tilt Spool	Three positions, Spring centered (Raise, Neutral and Lower)
Tilt Spool Dimension	11-7/16 Inches.
Auxiliary Spool	Three positions, Spring centered, (Extend, Neutral and Retract).
Auxiliary Spool Dimension	11-7/16 Inches.
Drop Check Valves	Spring Loaded, Hydraulically operated, One each spool.

REMOVAL AND INSTALLATION OF THE CONTROL VALVE

Before removing the control valve from the Loader, the Loader must be on a level surface with the bucket resting flat on the ground or floor. Shut the engine off, then move all three control levers back and forth several times to relieve the hydraulic pressure built up in the system. Now remove both the front plates and thoroughly steam clean the hydraulic control valve to prevent dirt from entering the hydraulic system during removal.

Removal

1. Remove the return line hose and the pressure tubing from the control valve, Figure DD-3.

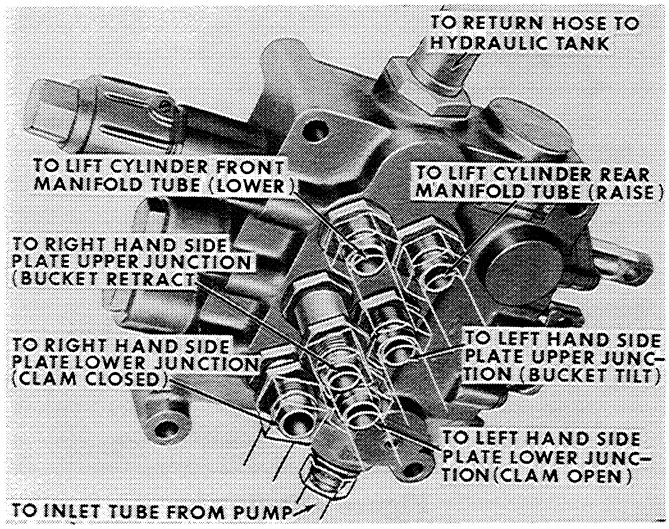

Figure DD-3

2. Disconnect the control levers from the valve spools. Remove the four mounting bolts and remove the valve from the Loader, Figure DD-4.

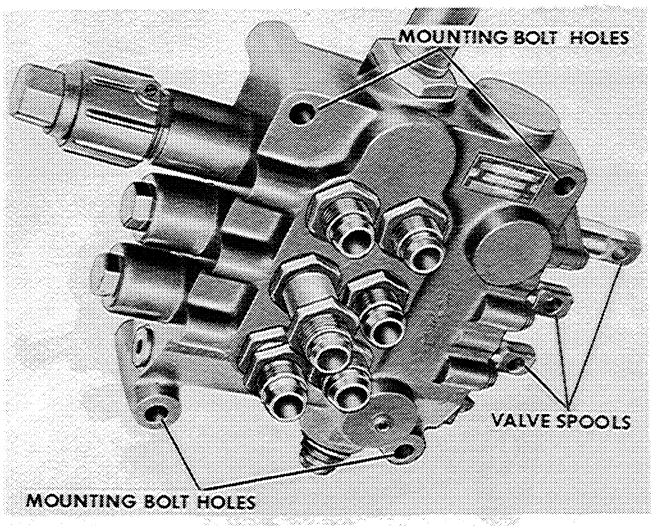

Figure DD-4

Installation

1. Install the control valve using the four mounting bolts. Connect the control levers to the valve spools, Figure DD-5

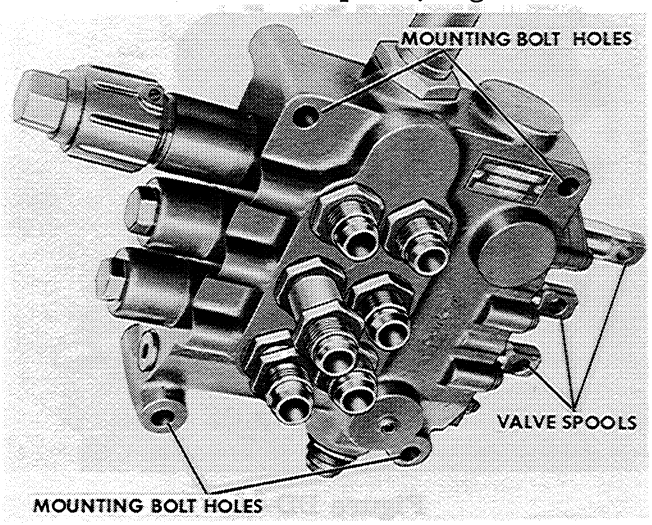

Figure DD-5

2. Connect the pressure lines and the return hose, Figure DD-6.

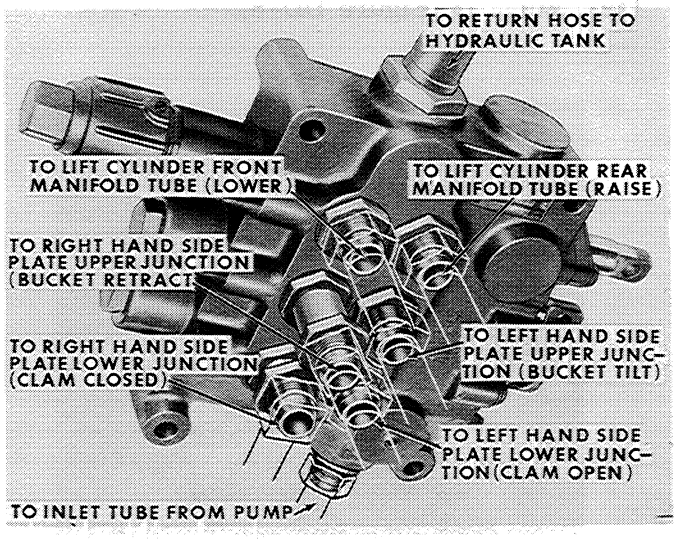

Figure DD-6

IMPORTANT Torque all pressure lines 73 to 82 foot pounds.

GENERAL

With the hydraulic control valve removed from the loader, the valve can be easily disassembled, cleaned, inspected and serviced. Before starting to disassemble the hydraulic control valve make sure the exterior of the valve body is clean, especially the area that is to be disassembled. Make sure that all parts are clearly tagged so that when used in reassembly, they can be returned to their respective places. Switching spools may reduce clearance and cause sticking or binding, on the other hand, it may increase clearance causing excessive leakage. Switching drop check valves may cause improper seating or sticking. Discard all "O" rings, gaskets and wipers and replace with new parts when reassembling the control valve.

Removal And Disassembly of the Float Lift Spool

1. Remove the tubing adapters from the control valve using a 1-1/2" wrench, Figure DD-7.

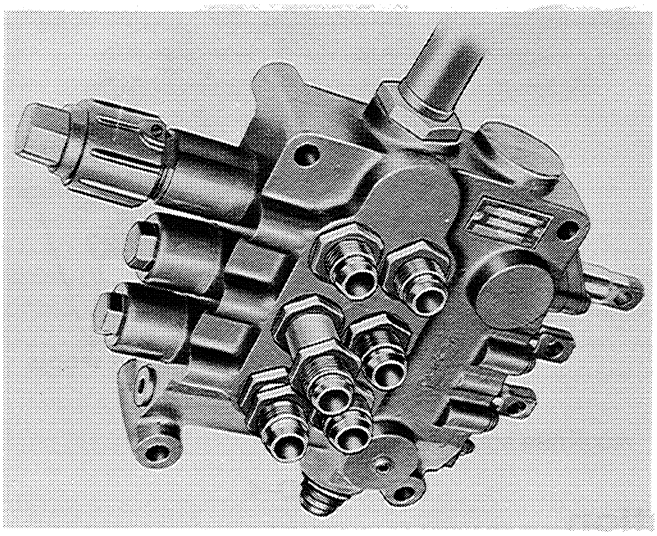

Figure DD-7

2. Loosen the outer cap set screw and remove the outer cap, Figure DD-8.

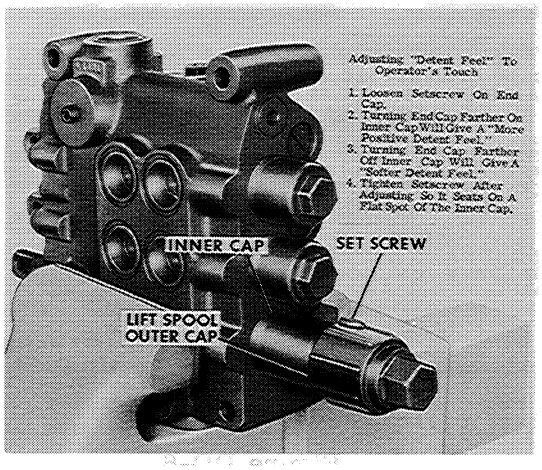

Figure DD-8

3. Remove the detent ball retainer and detent balls, Figure DD-9.

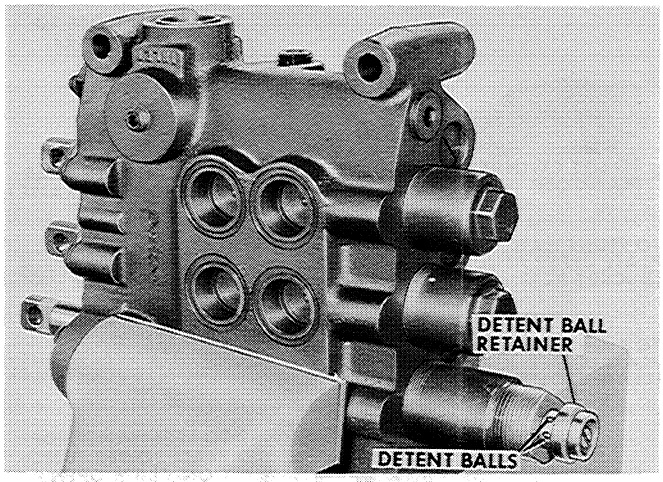

Figure DD-9

4. Remove the inner cap by unscrewing it from the valve body, Figure DD-10.

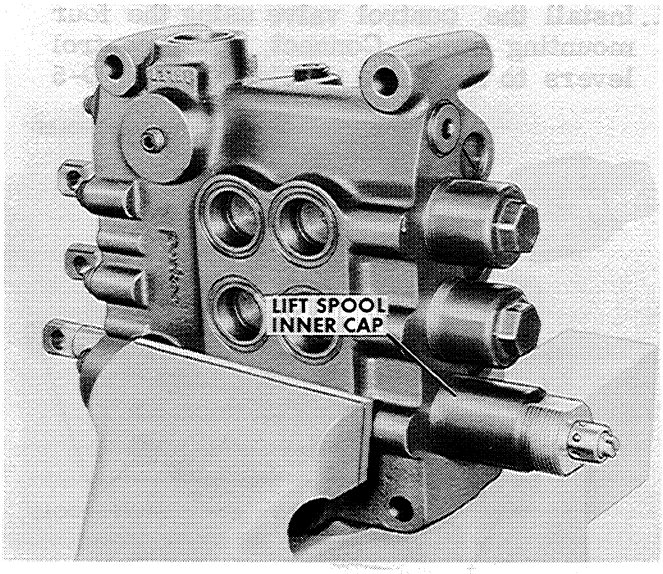

Figure DD-10

5. Grasp the detent sleeve and spring assembly and pull outward to remove the spool assembly from the valve body, Figure DD-11.

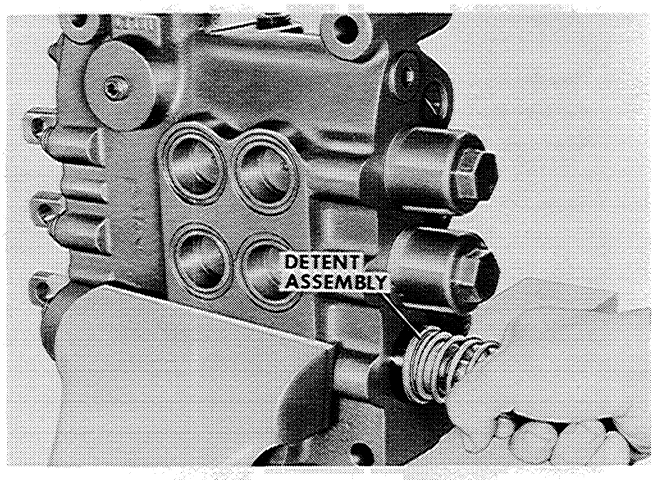

Figure DD-11

6. To remove the detent assembly from the spool, clamp the detent sleeve in a vise and using either a vise grip or similiar tool, unscrew the spool, Figure DD-12.

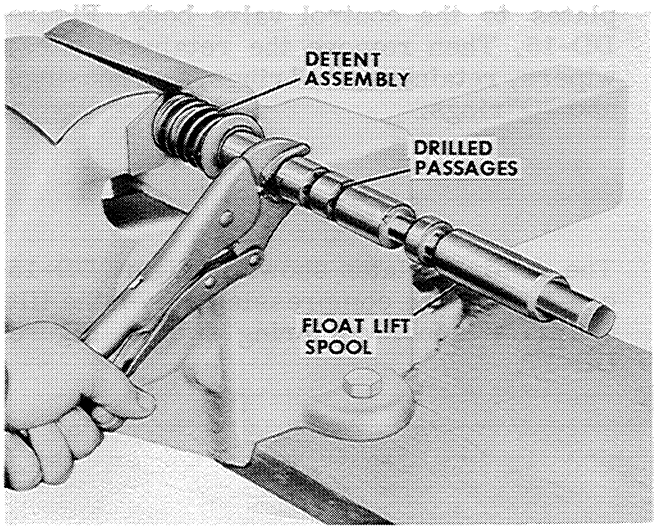

Figure DD-12

IMPORTANT

Do not use a wrench on the outer end of spool as it may cause the spool to break at the drilled passages in the center of the spool.

Removal and Disassembly of the Tilt Spool and or Auxiliary Spool

1. Remove either the tilt spool or auxiliary spool end cap using a 1"wrench as illustrated in Figure DD-13.

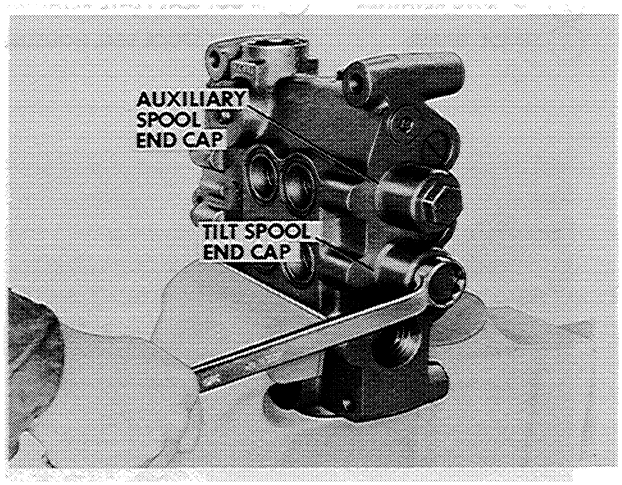

Figure DD-13

2. The spool can now be pulled out of the rear of the valve body, Figure DD-14.

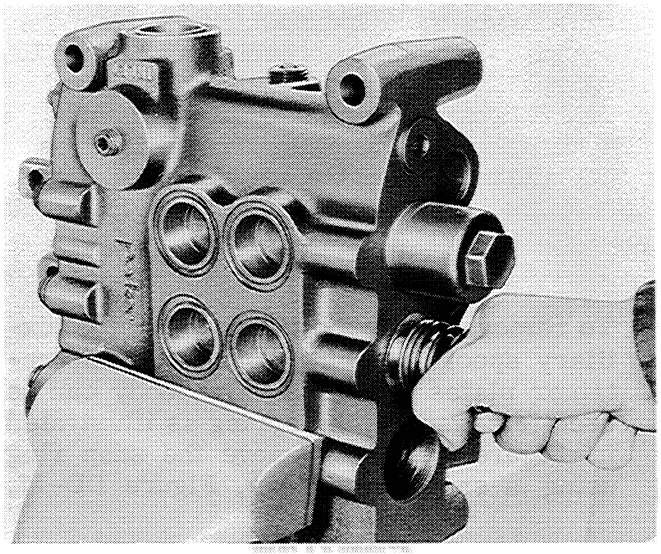

Figure DD-14

NOTE: Never try to remove either the tilt spool or the auxiliary spool out throught the other end, as it may cause damage to the spool.

3. Remove the screws that hold the retainer plates to the control valve body, Figure DD-15. Then remove the retainer plates, wipers, retainers, "O" rings, seal housings and "O"rings.

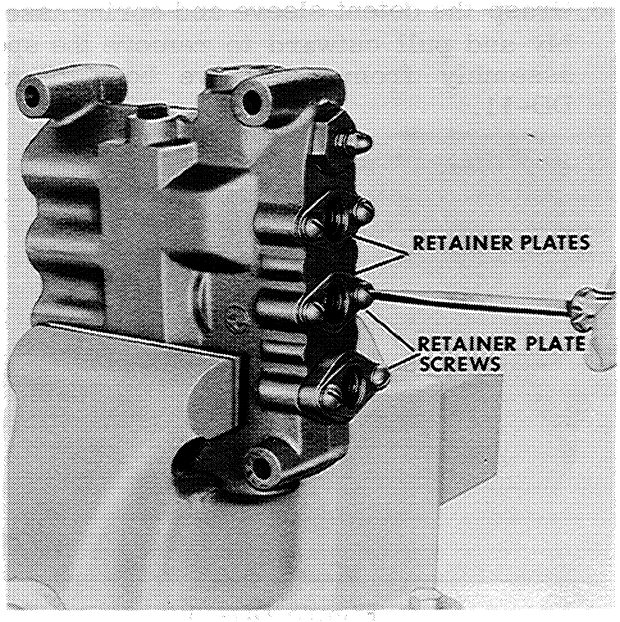

Figure DD-15

NOTE:

The retainer plates shown in Figure DD-15 can be used in compressing either the tilt auxiliary spool centering spring, Figure DD-17.

4. Figure DD-16 shows the order in which the "O" rings, seal housing, retainer, wipers and retainer plates are assembled in the control valve body.

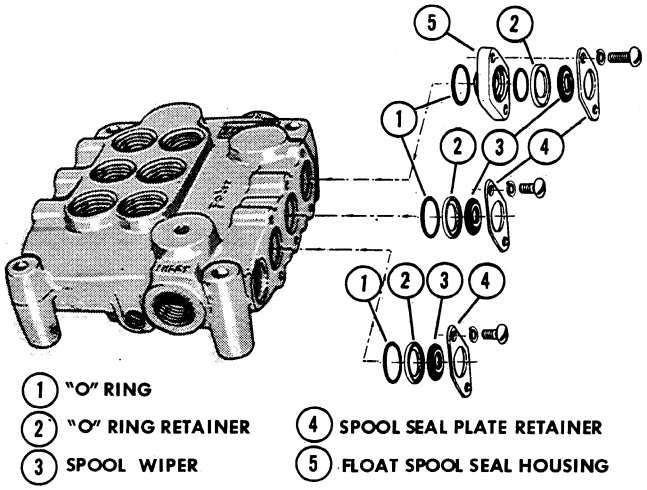

Figure DD-16

5. To remove either the tilt spool or the auxiliary spool centering spring, the two retainer plates from the valve body can be used to compress the spring as illustrated in Figure DD-17. Remove the snap ring using a snap ring pliers, Figure DD-17.

CAUTION

Care must be taken when loosening the nuts until all of the spring pressure is released.

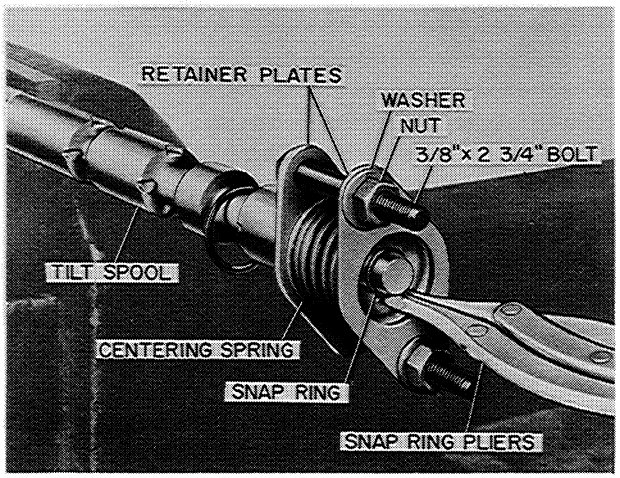

Figure DD-17

Removal of the Relief Valve

1. Remove the relief valve cap assembly from the control valve body, Figure DD-18.

2. To disassemble the relief valve cap assembly remove the acorn nut, washer, jam nut and washer. Then unscrew the set screw and remove the spring and plunger, Figure DD-18 and DD-19.

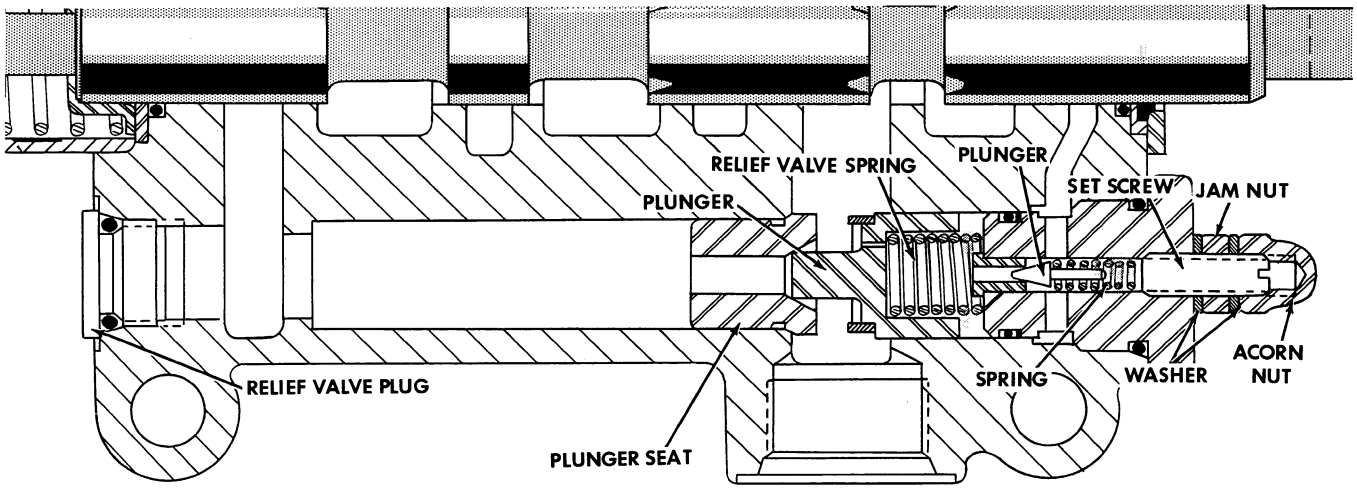

Figure DD-18

3. Remove the relief valve spring and plunger from inside the valve body, Figure DD-18 and DD-19.

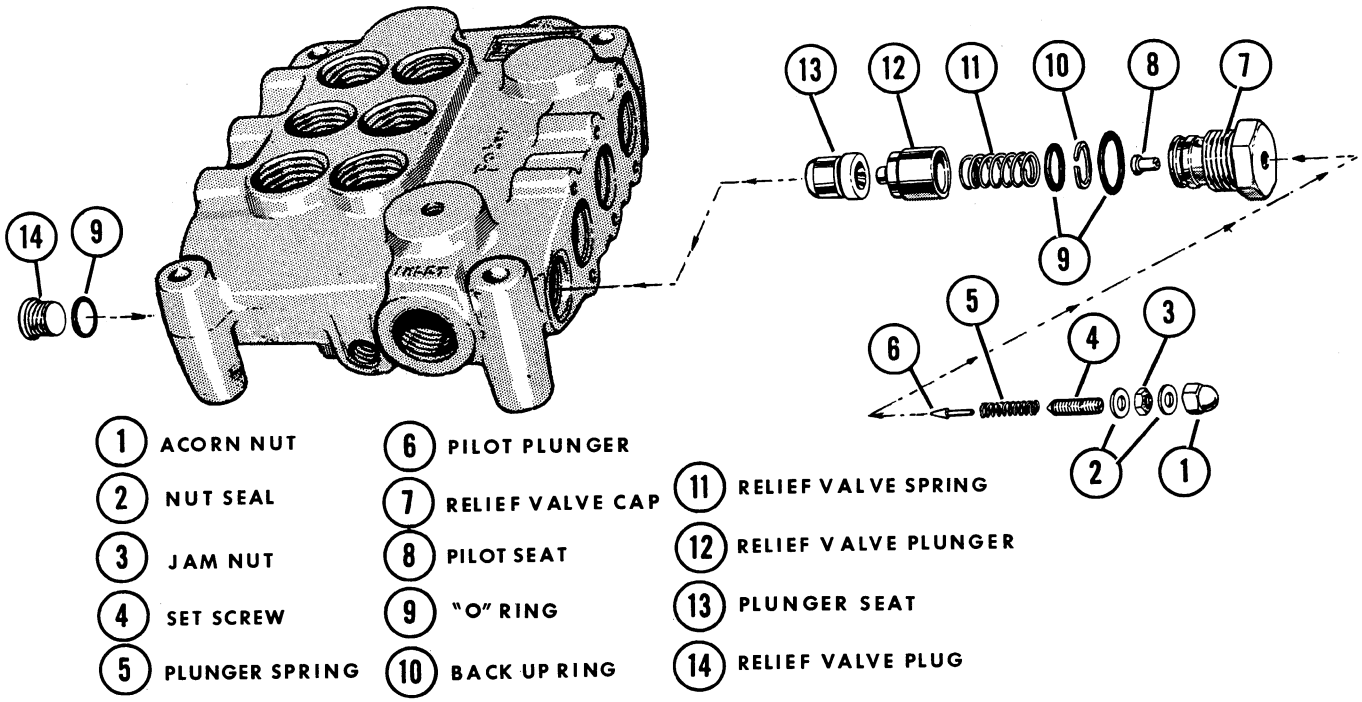

Figure DD-19

4. Remove the plug from the opposite end of the relief valve and using a wooden dowel tap out the plunger seat, Figure DD-18 and DD-19.

Removal of the Check Valves

1. Remove the drop check valve caps, Figure DD-20. Now remove the poppet springs and poppets.

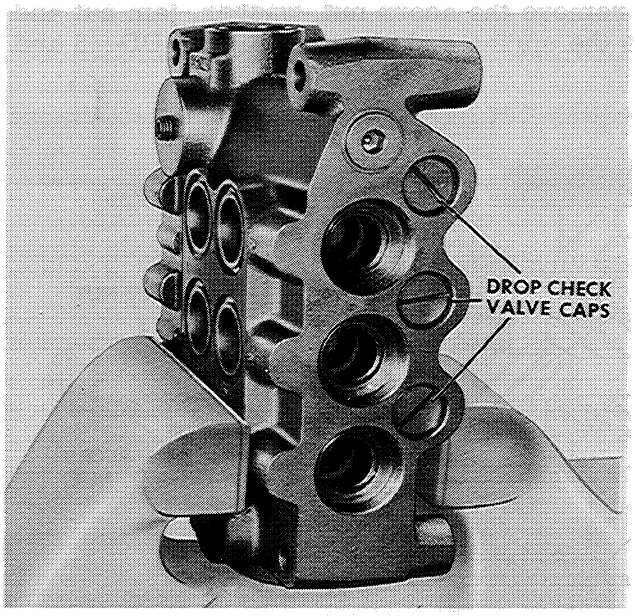

Figure DD-20

2. Figure DD-21 shows the order in which the drop check valves are assembled in the control valve body.

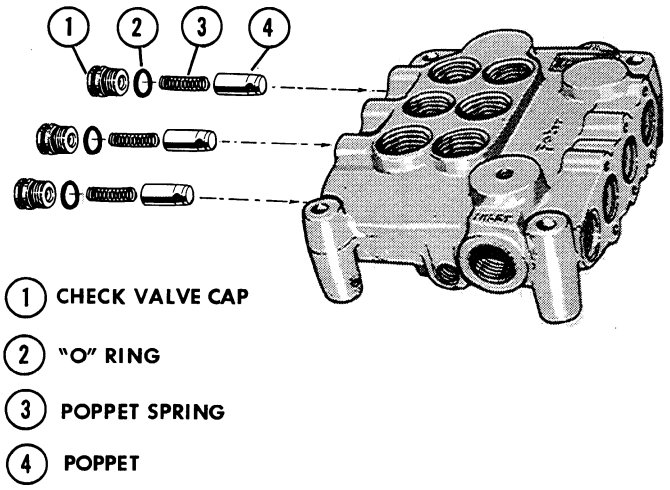

Figure DD-21

A soft wire with a smooth hook end may be used, if necessary, to remove the poppet spring and poppet.

INSPECTION OF THE VDP-14 CONTROL VALVE

Drop Check Valves

Inspect the drop check valve poppet and its seating face in the valve body for grooves or defects which may cause leakage, Figure DD-22. Check the poppet for free movement in the valve body bore, Figure DD-22. If the poppet appears to be faulty replace it with a new one.

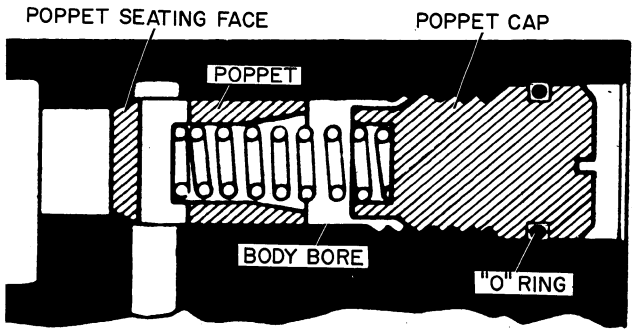

Figure DD-22

Tilt Spool or Auxiliary Spool Centering Spring

To check either the tilt spool or the auxiliary spool Centering Spring, place the centering spring in a spring tester as shown in Figure DD-23. The correct spring pressure when compressed to 29/32 Inch is between 45 and 55 pounds. Install a new spring if the pressure is less than 45 pounds.

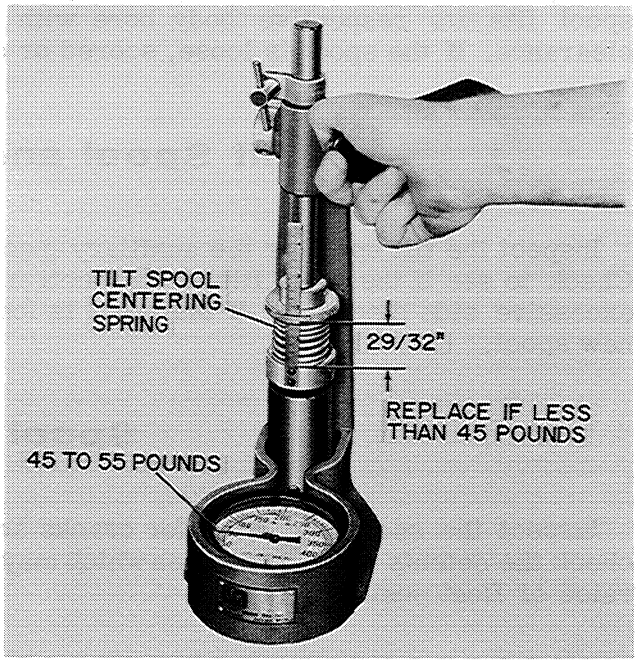

Figure DD-23

Discard all "O" rings, gaskets and wipers. Replace with new parts when reassembling the control valve.

IMPORTANT

After the parts have been inspected and the control valve is not to be reassembled immediately, coat all re-useable parts with hydraulic oil.

INSPECTION (Continued)

Whenever the hydraulic control valve is disassembled for servicing, inspect all the component parts and replace any that are found to be worn or damaged.

Valve Body

Inspect the valve body bores for grooves, deep scratches or excessive wear. If the valve body is damaged or has damaged threads, cracks or scored bores, the control valve will have to be replaced with a new unit.

Lift Spool

Inspect the lift spool for grooves, deep scratches and excessive wear. Check if the lift spool fits its respective body bore with a slight hand pressure and without excessive side clearance. If the spool is loose, scored or damaged it must be replaced with a new lift spool.

Tilt Spool and Auxiliary Spool

Inspect the tilt spool or the auxiliary spool for grooves, deep scratches and excessive wear. Check to see if the spool fits its respective body bore with a slight hand pressure and without excessive side clearance. If the spool is loose, scored or damaged it must be replaced with a new spool.

Spool End Caps

Inspect the spool end caps for cracks and damaged threads. In the float lift spool end cap, check the detents for sharp edges which may cause sticking of the float lift spool in either the raise or float position.

Pressure Relief Valve

Inspect the relief valve plunger and seat for ridges or scoring which may cause improper seating of the plunger or allow leakage.

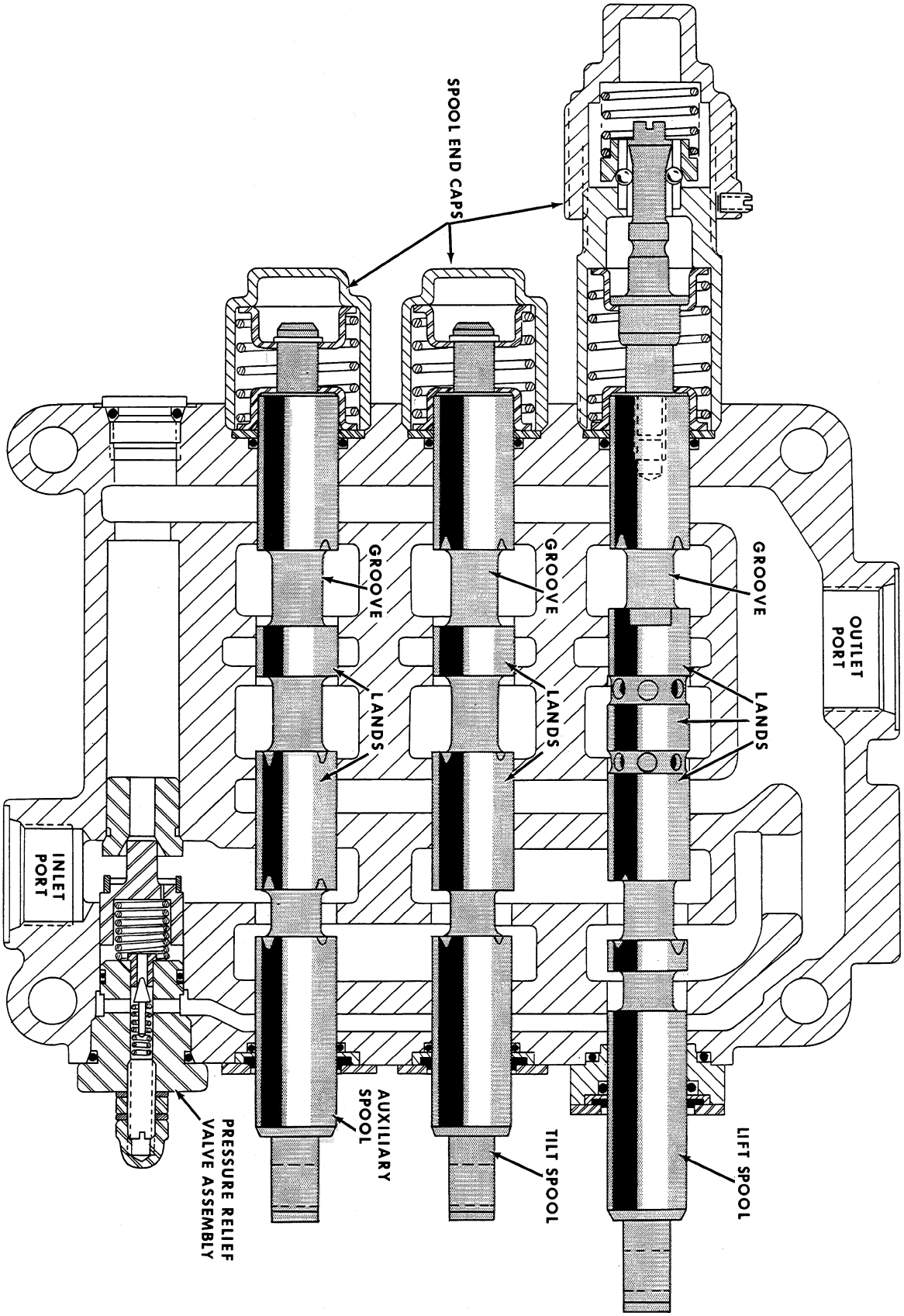
SPOOL END CAPS
GROOVE
GROOVE
GROOVE
LANDS
LANDS
LANDS
OUTLET PORT
INLET PORT
AUXILIARY SPOOL
TILT SPOOL
LIFT SPOOL
PRESSURE RELIEF VALVE ASSEMBLY

Figure DD-24

ASSEMBLY OF THE CONTROL VALVE

Prior to reassembly of the hydraulic control valve, make certain that the bench tools and all valve parts are clean. If necessary, rewash all parts before assembly. Coat all the valve parts with hydraulic oil before installing them in the valve body.

Assembly and Installation of Either the Tilt Spool or Auxiliary Spool

1. To reassemble either the tilt spool, or the auxiliary spool place a retainer plate, spring retainer, spring, spring retainer, and retainer plate over the end of the spool. Compress the spring as shown in Figure DD-25. Now install a new snap ring, Make sure the snap ring is fully seated in the groove. Then carefully remove the spring compressing device. Remove the Spool from the vise and place an "O" ring retainer and "O"ring over the eye end of the spool. Care must be taken to prevent cutting the "O"ring during installation.

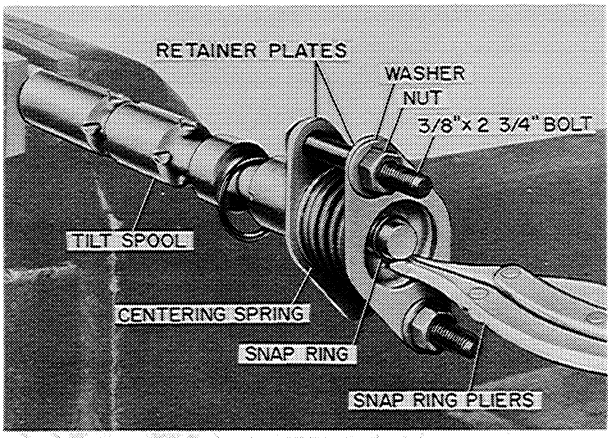

Figure DD-25

2. Insert either the Tilt Spool Assembly or Auxiliary Spool into the body and install the Spool Cap as shown in Figure DD-26. Tighten the spool Cap until it bottoms.

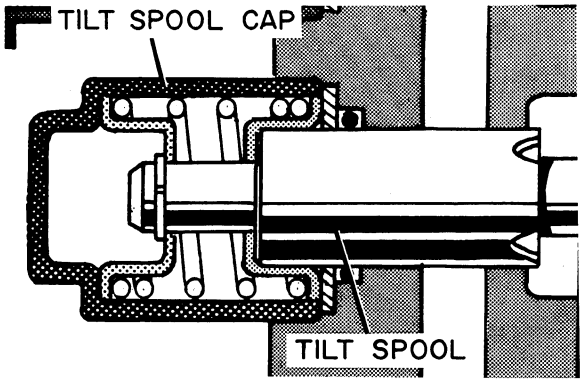

Figure DD-26

3. Install the "O" ring retainer, wiper and retainer plate in the order as shown in Figure DD-27 over the eye end of the spool Install the retainer plate, screws and washers.

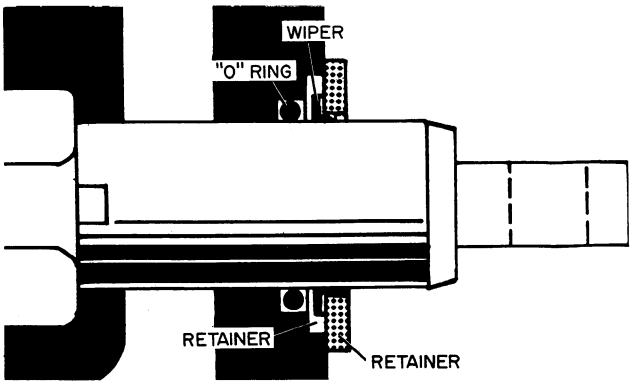

Figure DD-27

Assembly and Installation of the Float Lift Spool

1. Assemble the float lift spool by first applying Lock-Tite to either the internal threads in the end of the spool or to the external threads on the detent sleeve. Then install an "O" ring. spacer, spring retainer, spring, spring retainer and detent sleeve onto the end of the spool. Figure DD-28.

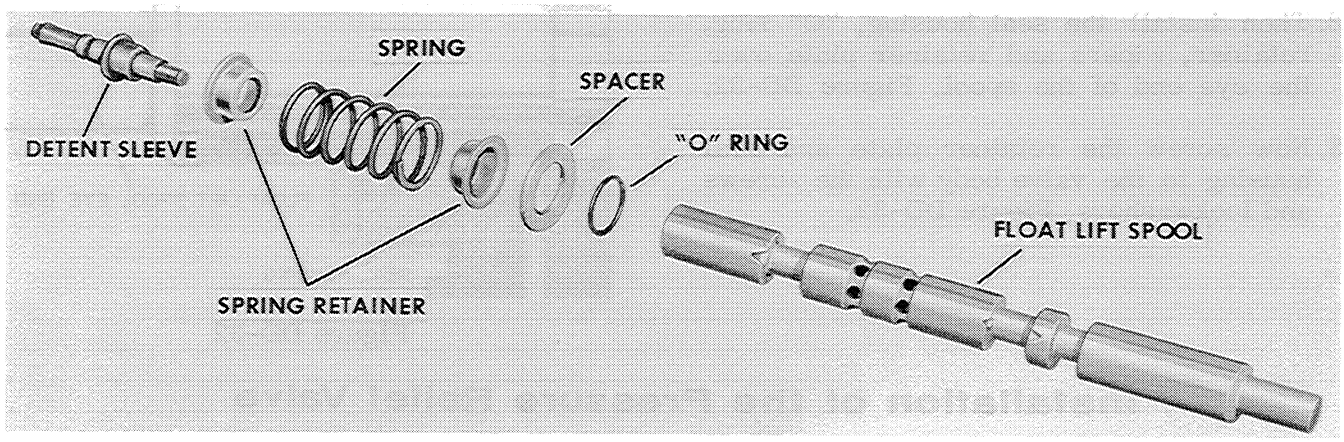

Figure DD-28

2. Install the spool into the valve body and install the inner cap, Figure DD-29.

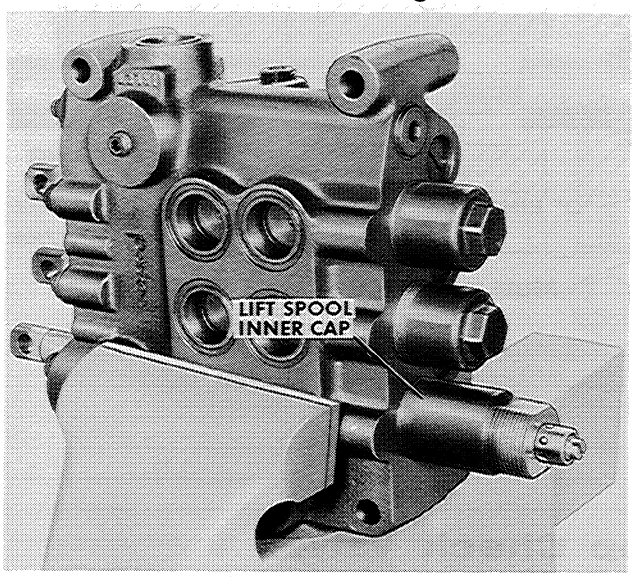

Figure DD-29

3. Install the six detent balls and retainer into the inner sleeve, Figure DD-30..

NOTE:

A small amount of vasoline applied to the detent balls will help hold them in place during assembly.

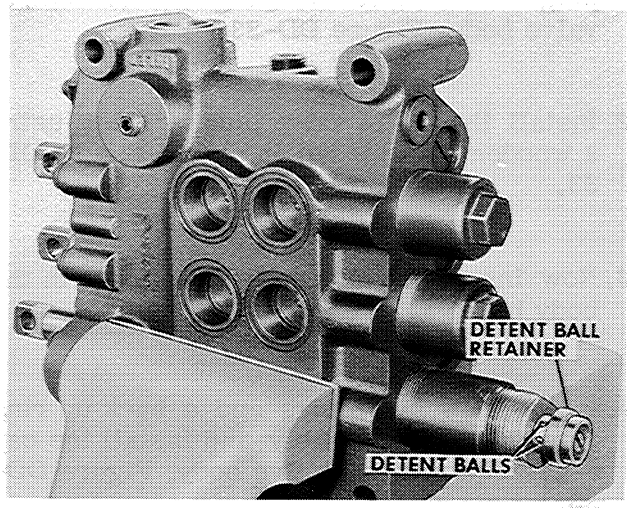

Figure DD-30

4. Install the outer cap spring and cap as shown in Figure DD-31.

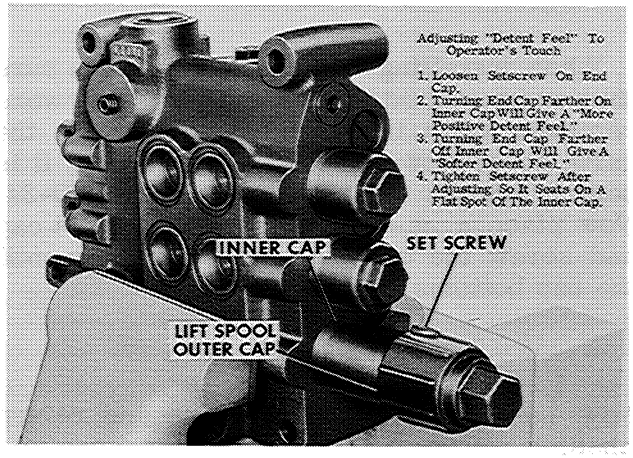

Figure DD-31

Installation of the Float Lift Spool End Seals

1. Place a large "O" ring over the eye end of the spool and into the recess in the valve body, Figure DD-32.

2. Then install the seal housing, "O" ring, retainer, wipers and retainer plate over the eye end of the spool. Figure DD-32.

3. Now screw the retainer plate and seal housing to the valve body with the screws and lockwashers, Figure DD-32.

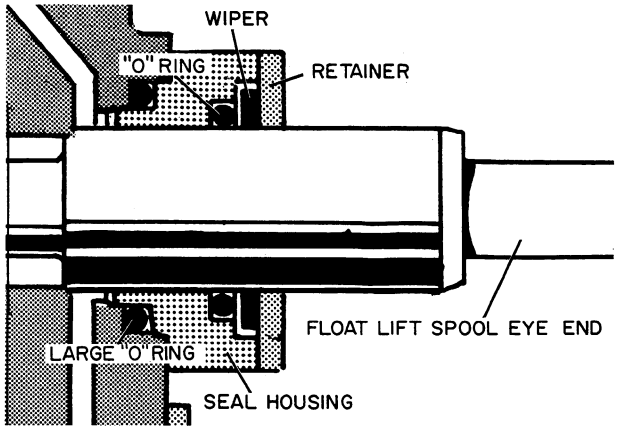

Figure DD-32

Installation of the Pressure Relief Valve

1. Place a new "O" ring on the relief valve plug and install the plug in the control valve body, Figure DD-33.

2. Install the relief valve plunger seat, using a wooden dowel to tap in place, Figure DD-33.

3. Now insert the plunger and spring in the body bore, Figure DD-33.

4. Install new "O" rings and a back up ring onto the cap assembly and install the cap assembly into the valve body, Figure DD-33.

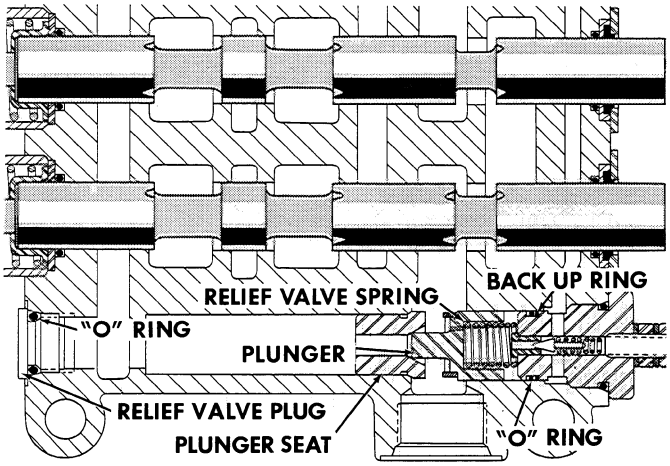

Figure DD-33

Installation of the Drop Check Valves

When installing the check valves be sure they are installed in the same bores they were removed from in the valve body. Slide the valve poppet down through the bore until it is seated against the body seat, Figure DD-34. Now place a new "O" ring on the poppet cap and screw the cap into the valve body until the cap bottoms, Figure DD-34.

NOTE:

Now install the tubing adapters and return lines.

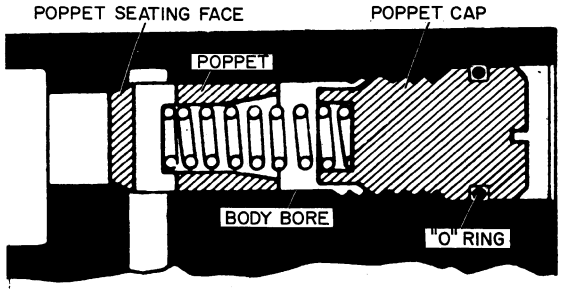

Figure DD-34

RELIEF VALVE PRESSURE CHECK

The Pressure Relief Valve used in the VDP-14 Hydraulic Control Valve is adjustable so as the right pressure setting can be obtained. After the control valve assembly has been serviced and reinstalled on the Loader, it must be adjusted to the right pressure setting.

To install the pressure gauge for checking the Loader hydraulic system proceed as follows:

1. Rest the Loader bucket flat on the ground or floor.

2. Shut off the engine and relieve the hydraulic pressure in the lines by working the control levers back and forth several times, Figure DD-35.

3. Remove the pipe plug from the control valve and install either the 4501AA or the A22791 Pressure Gauge.

4. Start the engine and run it at approximately 1000 RPM. Slowly pull the tilt control lever rearward until the bucket is tilted all the way back and the pressure relief valve is forced open.

5. Continue holding the tilt control lever rearward and gradually increase the engine speed to 1500 RPM.

6. Observe the pressure gauge reading. If the pressure gauge registers above or below the right pressure setting, the pressure relief valve must be adjusted.

7. To adjust the pressure relief valve, remove the acorn nut and loosen the locknut. Turn the adjusting screw in or out to obtain the right pressure setting.

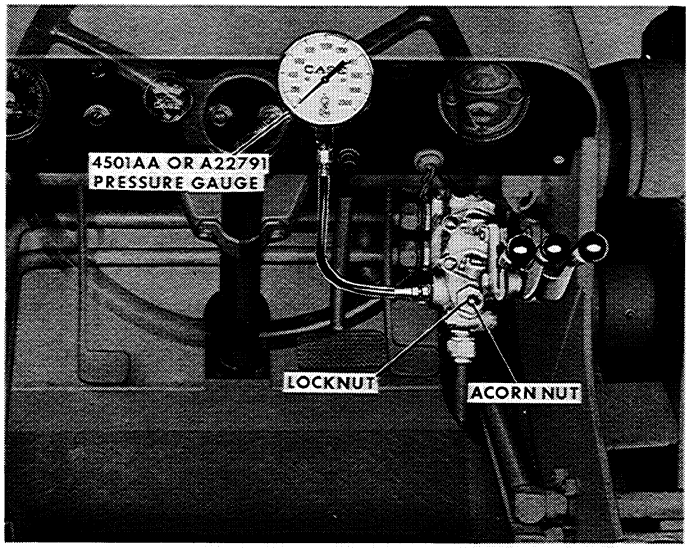

Figure DD-35

8. After the right pressure relief valve setting is obtained, rest the Loader bucket flat on the ground or floor and shut-off the engine.

9. Relieve hydraulic pressure in the system by working the control levers back and forth several times.

10. Remove the pressure gauge and install the pipe plug.

11. Start the engine, bleed the hydraulic system by working the control levers through several raising, opening and lowering cycles. and through several full tilt up and tilt down cycle. Check the oil level in the hydraulic reservoir and add oil if necessary.

The 4501AA or the A22791 Pressure Gauge that can be used on all Case 4 Wheel Drive Unit Loaders is available at your Case Dealer.

RELIEF VALVE PRESSURE SETTING

Refer to Hydraulic System Pressure Check Sheet of Group IV Hydraulic System.

SERVICE SUGGESTIONS

Oil Leakage (External)

CAUSE	REMEDY
1. External oil leakage between valve body and spool end caps due to loose end cap. Figure DD-36.(1)	1. Tighten the spool end caps, Figure DD-36. (1)
2. External oil leakage between valve body and float spool end seal housing due to damaged "O" ring, Figure DD-36. (2)	2. Replace damaged "O" ring, Figure DD-36. (2)
3. External oil leakage between valve body and spool retainer plates due to loose retainer plate screws,Figure DD-36. (3)	3. Tighten retainer plate screws.
4. External oil leakage between valve body and tubing adapters due to damaged "O" rings.	4. Replace tubing adapter "O" ring.

Oil Leakage (Internal)

CAUSE	REMEDY
1. Internal oil leakage between spool and wiper due to worn or damaged "O" ring, Figure DD-36. (4)	1. Replace worn or damaged "O" ring, Figure DD-36.(4)
2. Oil leakage around poppet valve caps due to worn or damaged "O" ring, Figure DD-36.	2. Replace worn or damaged "O" ring, Figure DD-36. (5)
3. Oil leakage around pressure relief valve cap due to worn or damaged plunger "O" ring, Figure DD-36.(6)	3. Replace worn or damaged plunger "O" ring, Figure DD-36. (6)
4. Internal oil leakage from valve body into spool end caps due to worn or damaged "O" ring, Figure DD-36.(7)	4. Replace worn or damaged "O" ring, Figure DD-36.

Slow or Jerky Action of Hydraulic System

CAUSE	REMEDY
1. Air in hydraulic system.	1. Check oil level in the hydraulic reservoir. Add oil if necessary.
2. Relief valve not correctly set.	2. Check relief valve pressure setting. Refer to Pages DD-21 thru DD-22.
3. Relief Valve Sticking	3. Remove the relief valve for cleaning and inspection. Refer to Page DD-11.
4. Dirt or foreign particles lodged between relief valve plunger and seat.	4. Disassemble, clean and reassemble. Refer to Page DD-11.

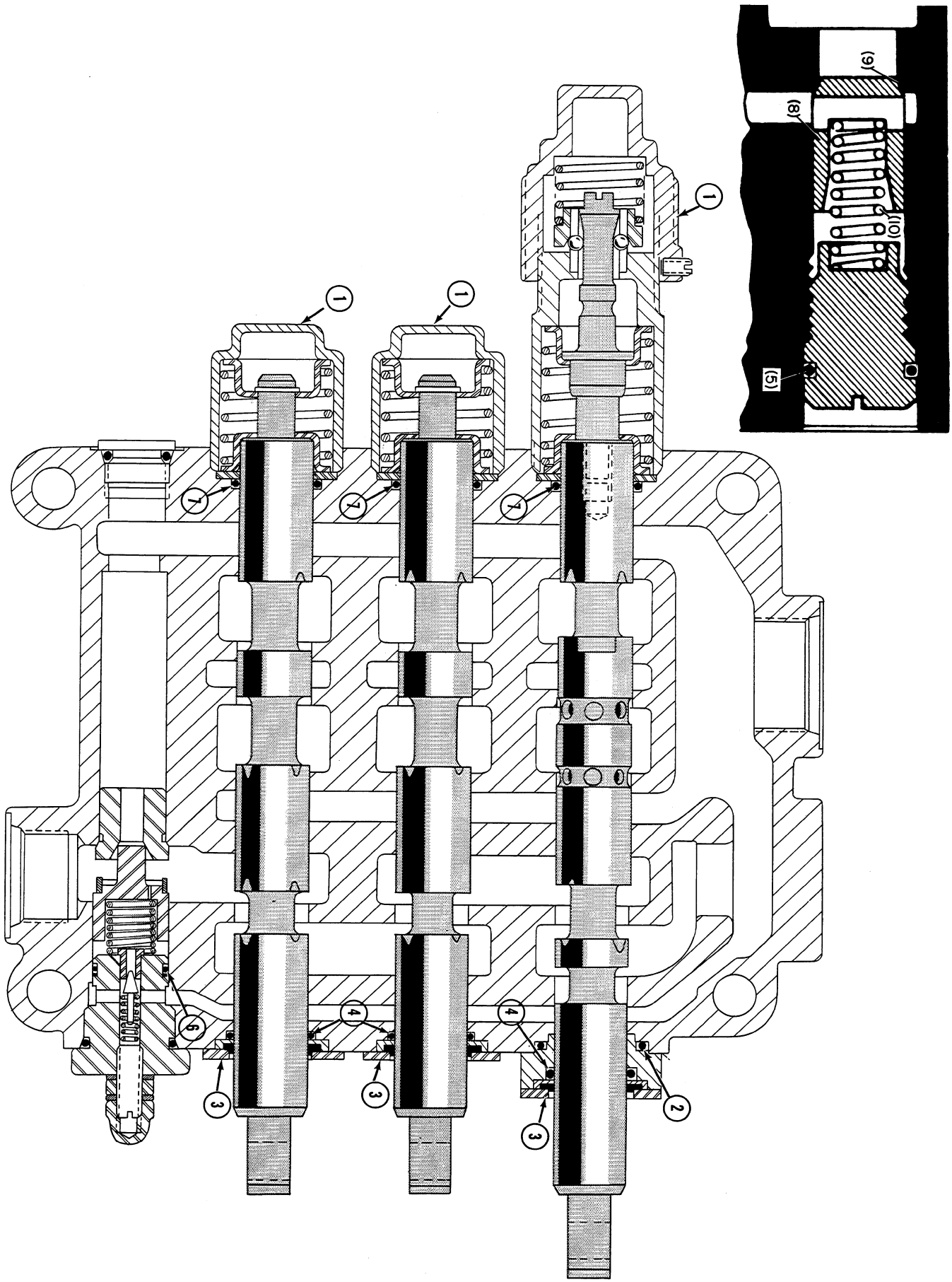

Figure DD-36

SERVICE SUGGESTIONS (Continued)

Load Drops When Spool is Moved From Neutral to Power Position

CAUSE	REMEDY
1. Dirt or foreign particles lodged between drop check valve and poppet seat. (9)	1. Remove the drop check valves for cleaning and inspection. Refer to Pages D-15. (9)
2. Scored drop check valve poppet, Figure DD-37. (8)	2. Install new drop check valve poppet, Figure DD-37.(8)
3. Scored drop check valve poppet seat in valve body, Figure DD-37.(9)	3. Replace valve body.
4. Drop check valve spring worn or broken, Figure DD-37.(10)	4. Check drop check valve spring. Replace if worn or broken. Refer to Page DD-37.

Spring Centered Spools Will Not Return to Neutral

CAUSE	REMEDY
1. Spools will not return to neutral from either the raise or lower position due to weak or broken spring. (11)	1. Remove and check centering spring, Figure DD-37, (11) .
2. Spools sticking or binding due to bent spool, varnish on spools or sharp corners on either spools or valve body, Figure DD-37.	2. Remove spools, check for straightness, varnish deposits and sharp corners. Replace if damaged, Figure DD-37.

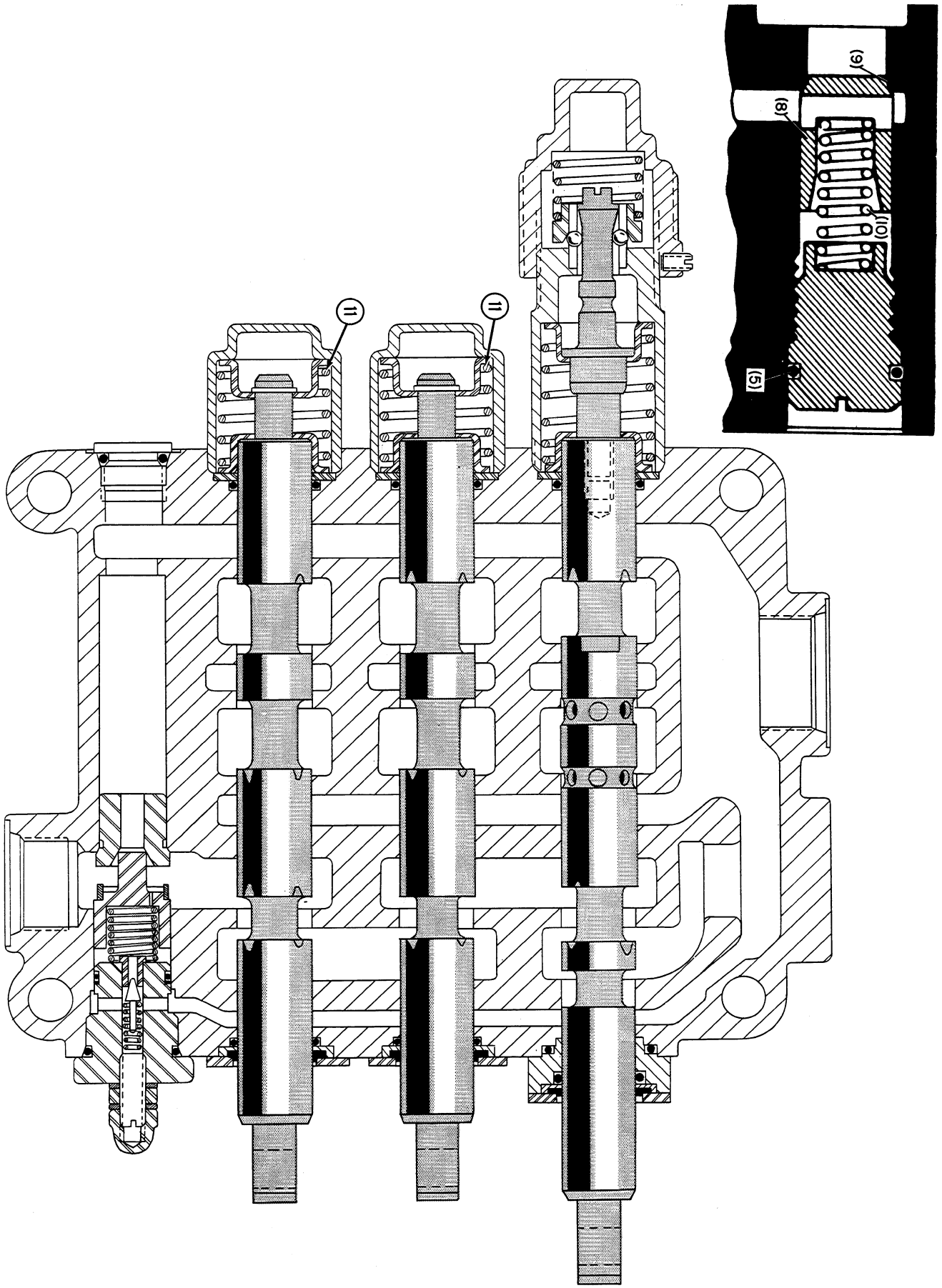

Figure DD-37

NOTE: **The** CASE CORPORATION **reserves the right to make improvements in design or changes in specifications at any time without incurring any obligation to install them on units previously sold.**

SECTION
J

SERVICING THE
2000-A SERIES
GEAR TYPE HYDRAULIC PUMP

ON

CASE 4 WHEEL DRIVE
UNIT LOADERS

Rac. Form 9-74561

PRINTED IN U.S.A.

TABLE OF CONTENTS

SPECIFICATIONS J-2

INTRODUCTION J-3

General J-3

REMOVAL OF THE HYDRAULIC PUMP J-4

DISASSEMBLY OF THE HYDRAULIC PUMP J-5

INSPECTION OF THE HYDRAULIC PUMP J-6

ASSEMBLY OF THE HYDRAULIC PUMP J-8

INSTALLATION OF THE HYDRAULIC PUMP J-10

SERVICE SUGGESTIONS J-11

TOOLS REQUIRED J-12

SPECIFICATIONS

Pump Type ---------- Flange Mounted, Gear Type, Fixed Displacement.

Pump Capacity ---------- 33 G. P. M. at 2150 Engine RPM

Pump Gears ---------- Drive Gear and Driven Gear - Matched Set.

Drive Shaft Bearings ---------- Roller Bearings and Ball Bearings.

Driven Shaft Bearings ---------- Roller Bearings

INTRODUCTION

General

The 2000A Series Hydraulic Pump used on the Unit Loader is a flange mounted, gear type, fixed displacement pump, mounted to the converter housing and driven by the impeller. The hydraulic pump operates continuously whenever the Loader engine is running, drawing oil from the reservoir and circulating the oil through the system and filter, back into the reservoir.

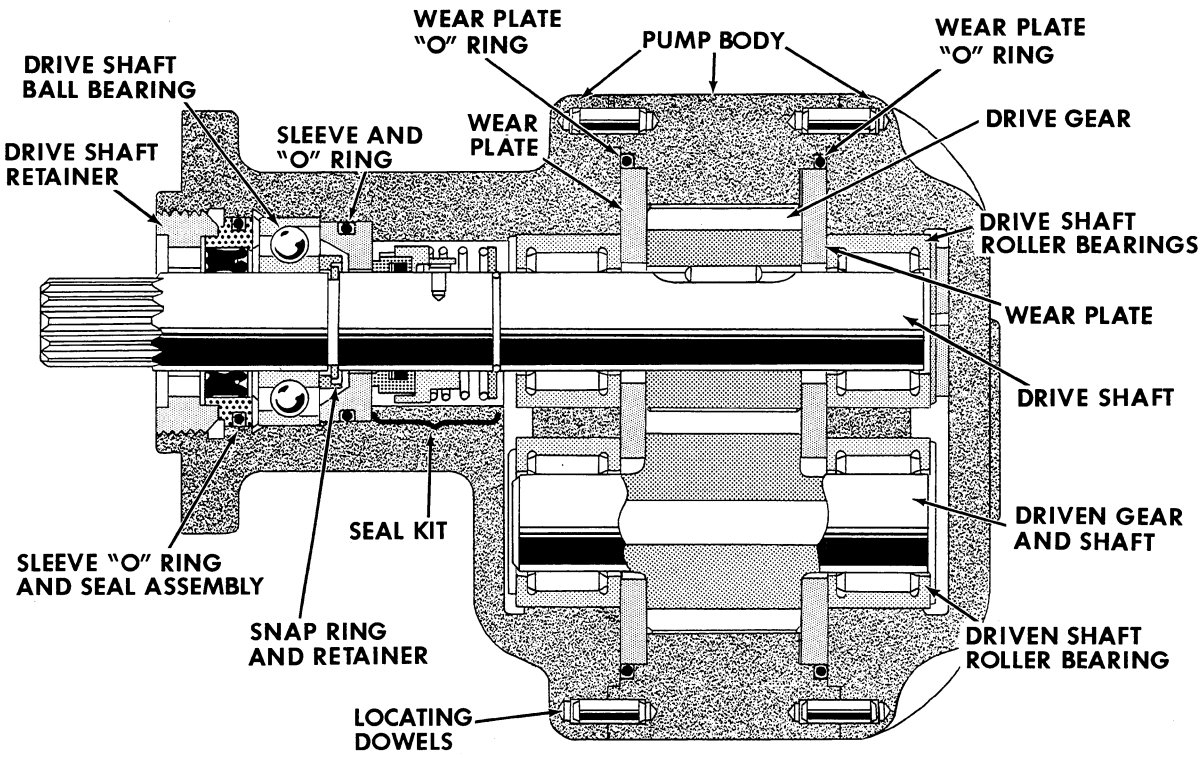

Figure J-1

Pump Body

The hydraulic pump body is cast in three sections for ease in disassembly, cleaning, inspection and servicing. The pump body is cored and drilled for installation of "O" rings, oil seals and bearings. When assembled the three sections of the pump body are held together by 4 capscrews to form an oil tight housing for the pump gears.

Pump Gears

Two gears are contained in the pump assembly, a drive gear and a driven gear. As the gears of the hydraulic pump revolve, the hydraulic oil drawn from the reservoir is carried between the gear teeth and pump body from inlet, or suction side of the pump to the outlet or pressure side of the pump. Hydraulic oil is prevented from returning to the inlet side of the pump by the close mesh of the pump gears and the small clearances between the gears, pump body and the pump cover. The pump gears are a matched set, therefore, both gears must be replaced if replacement is ever necessary.

"O" Rings and Oil Seals

In the hydraulic pump assembly, "O" rings are used to prevent leakage of oil between the pump body sections and around the drive shaft. The oil seal on the pump drive shaft is used to prevent transfer of oil between the hydraulic pump and converter. Whenever the pump is disassembled, all "O" rings and oil seals must be replaced.

REMOVAL OF THE HYDRAULIC PUMP

Before starting to remove the hydraulic pump, the pump and converter must be steam cleaned to prevent dirt from entering either the converter or hydraulic system. Also drain the hydraulic reservoir oil. Use clean oil when refilling the reservoir.

3 SPOOL VALVE SYSTEM

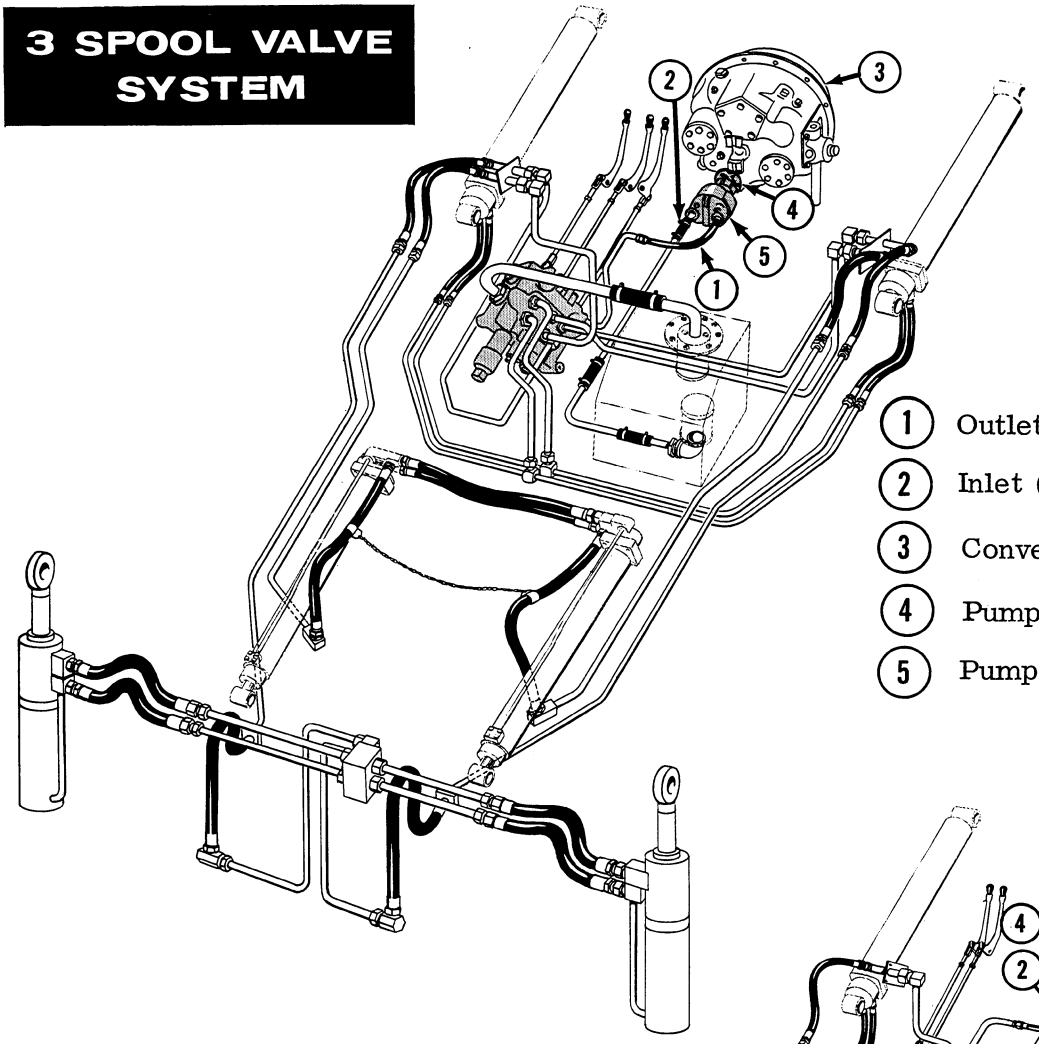

1. Outlet (Pressure) Hose
2. Inlet (Suction) Hose
3. Converter Housing
4. Pump Mounting Bolts
5. Pump

Figure J-2

A. Disconnect the inlet (suction) and outlet (pressure) hoses. Cap hoses to prevent entry of dirt.

B. Remove the pump to converter housing capscrews.

C. Remove the pump from the converter housing.

NOTE: Cover the converter housing opening after the pump has been removed.

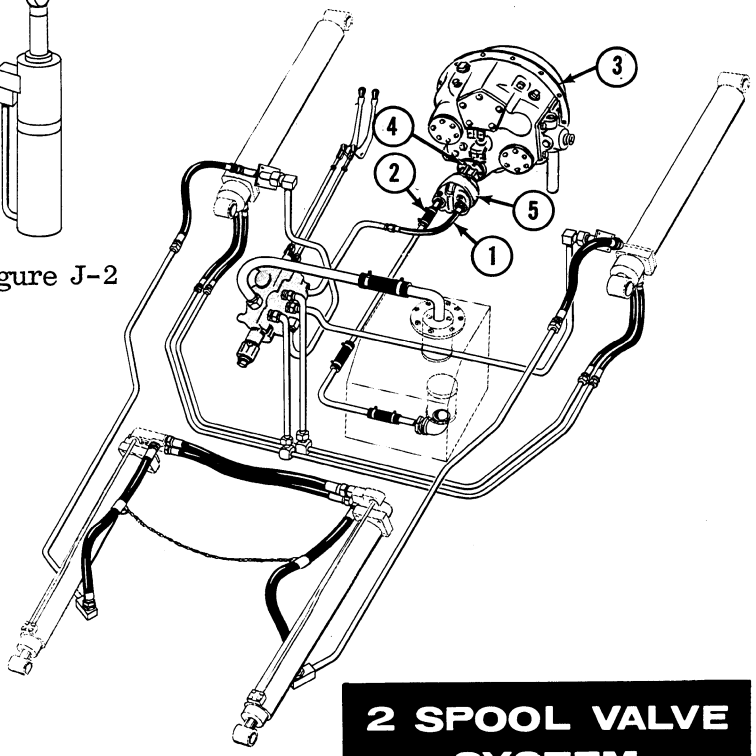

2 SPOOL VALVE SYSTEM

DISASSEMBLY OF THE HYDRAULIC PUMP

(Refer to Figure J-3)

A. Clean the exterior of the pump before starting disassembly.

B. Remove the pump cover to adapter capscrews.

C. Remove the pump cover.

D. Remove the wear plate, "O" ring and shims.

E. Before removing the pump gears, mark the gears as shown with an India stone so the gears can be installed in proper mesh.

F. Remove the drive gear, drive gear pin and driven gear.

G. Remove the pump body, wear plate and wear plate shim.

NOTE The number of shims used will vary.

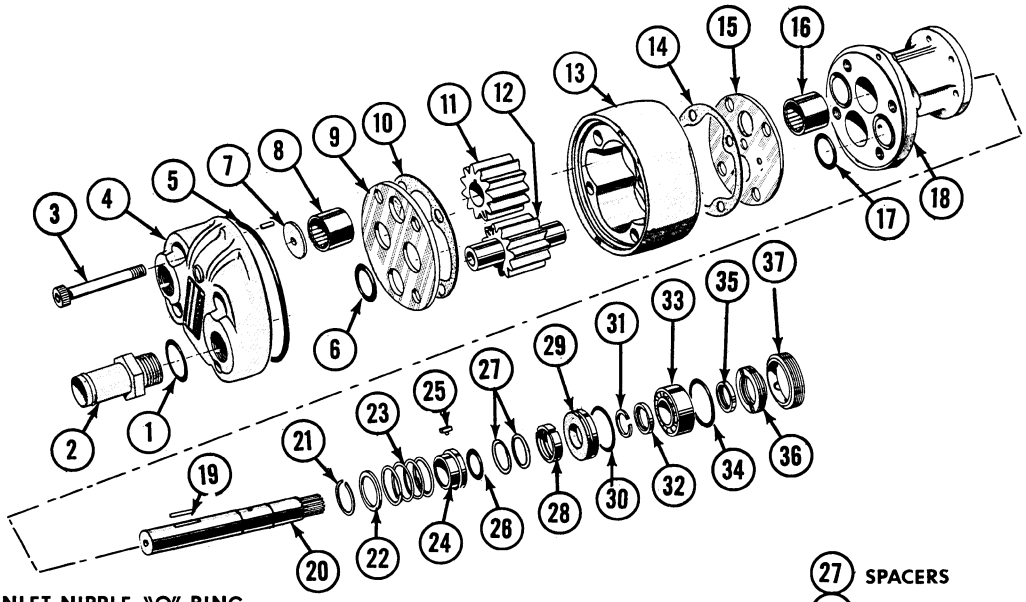

1. INLET NIPPLE "O" RING
2. INLET NIPPLE
3. COVER TO ADAPTER CAPSCREWS
4. PUMP COVER
5. COVER "O" RING
6. SUCTION & PRESSURE PORT "O" RINGS
7. DRIVE SHAFT THRUST WASHER
8. ROLLER BEARING
9. WEAR PLATE
10. SHIM
11. DRIVE GEAR
12. DRIVEN GEAR
13. PUMP BODY
14. SHIM
15. WEAR PLATE
16. ROLLER BEARING
17. SUCTION & PRESSURE PORT "O" RINGS
18. PUMP ADAPTER
19. DRIVE GEAR PIN
20. DRIVE SHAFT
21. SNAP RING
22. SPACER
23. SPRING
24. SLEEVE
25. SLEEVE KEY
26. "O" RING
27. SPACERS
28. SEAL RETAINER
29. INNER SLEEVE
30. INNER SLEEVE "O" RING
31. SNAP RING
32. SNAP RING RETAINER
33. DRIVE SHAFT BALL BEARING
34. OUTER SLEEVE "O" RING
35. OUTER SLEEVE OIL SEAL
36. OUTER SLEEVE
37. RETAINER

Figure J-3

H. Remove the drive shaft seal retainer.

I. The drive shaft and seal assembly can now be pulled out of the adapter.

J. Remove the sleeve containing the sleeve seal and "O" ring.

K. Remove the drive shaft ball bearing, bearing retainer and snap ring.

L. Remove the inner sleeve and "O" ring, seal cup, spacers and "O" ring.

M. Remove the spring sleeve, pin, spring, spacer and small snap ring.

INSPECTION OF THE HYDRAULIC PUMP
(Refer to Figure J-4)

With the hydraulic pump disassembled, the component parts can be easily cleaned and inspected for wear, scratches or cracks. Any parts that are excessively worn or damaged must be replaced.

The Pump Body Cover must be thoroughly cleaned and inspected after the component parts are removed. The pump body cover must be carefully inspected for nicks, grooves and cracks. Any nicks or grooves on the face of the end cover may cause internal or external leakage between the body cover and gear housing.

The Roller Bearings must be thoroughly inspected. Check the rollers for free movement within the bearing cage. Also check rollers for excessive side clearance. Check the bearing cage for bent ends that may cause sticking of the roller bearings.

NOTE Never try to clean the roller bearings . If there is dirt or foreign particles in the bearings, replace them.

The Gear Housing must be thoroughly cleaned and inspected for grooves, nicks, excessive wear and cracks. Any nicks or grooves on either face of the gear housing may cause improper seating and leakage between the gear housing and end covers. Excessive wear within the gear housing could be caused by either worn bearings or improper torque on the pump body retainer cap screws. If the gear housing has excessive wear or cracks the gear housing must be replaced.

The Gears when removed from the gear housing must be cleaned and inspected. The gear shaft ends must be checked for grooves, score marks and burrs. Any burrs, score marks or grooves on the gear shaft ends may cause damage to the roller bearings. If one gear is found to be worn or damaged, both gears must be replaced because the gears are a matched set and must never be replaced separately.

The Wear Plates must be thoroughly inspected for nicks, burrs or grooves that may cause misalignment and binding of the roller bearings or damage to the "O" rings. Also, check for nicks, burrs or grooves that may prevent proper seating. Also, use a straight edge to check the flatness of the wear plates.

The Adapter must be thoroughly cleaned and inspected. After the component parts have been removed, the adapter end cover must be carefully checked for nicks, grooves and cracks. Any nicks or grooves on the face of the adapter may cause internal or external leakage between the adapter and gear housing.

The Drive Shaft when removed from the adapter end cover, must be carefully cleaned and inspected. The inner end of the drive shaft must be checked for nicks, burrs and grooves that may cause binding when installing the drive gear. Also, inspect the splined end of the drive shaft for nicked, cracked and broken splines. If the splines are cracked or broken, the drive shaft must be replaced.

The Drive Shaft Ball Bearing must be carefully cleaned and inspected for nicks, burrs and grooves that may cause binding of the balls or uneven wear on either the inner or outer races of the bearing. If either the balls or the races are found to be damaged, the bearing must be replaced.

The "O" Rings and Oil Seals must be replaced every time the pump is disassembled.

INSPECTION OF THE HYDRAULIC PUMP

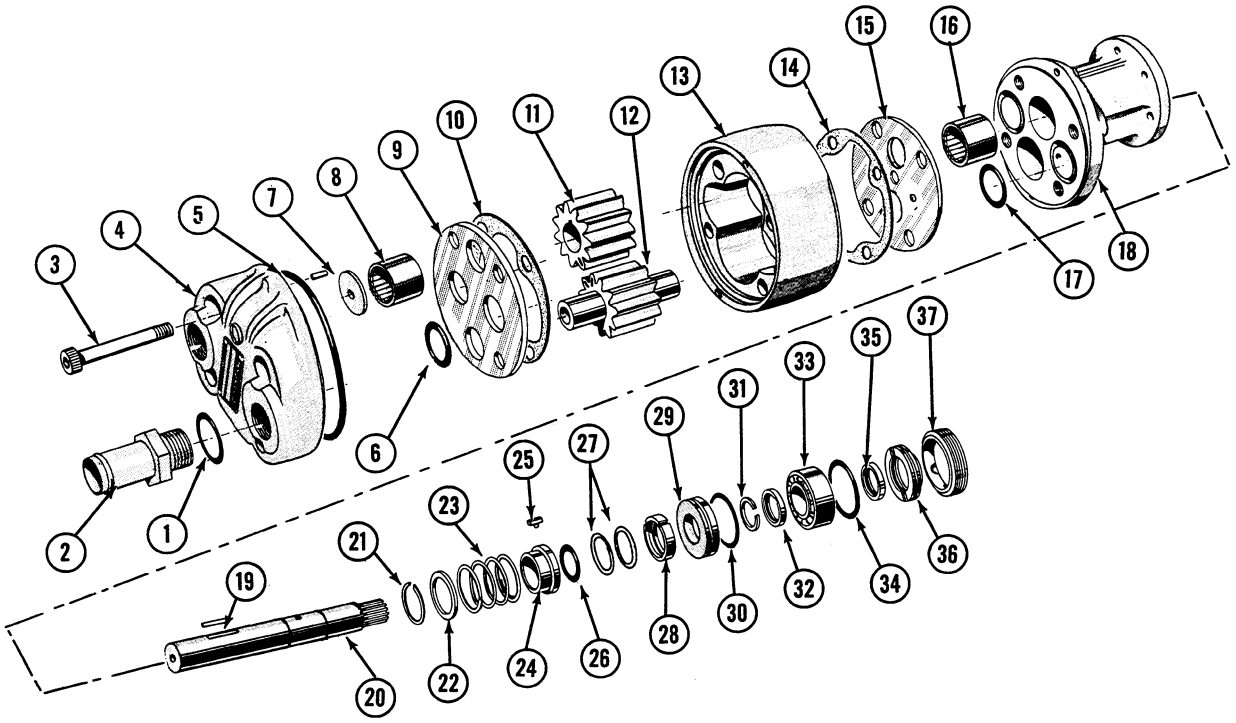

1. INLET NIPPLE "O" RING
2. INLET NIPPLE
3. COVER TO ADAPTER CAPSCREWS
4. PUMP COVER
5. COVER "O" RING
6. SUCTION & PRESSURE PORT "O" RINGS
7. DRIVE SHAFT THRUST WASHER
8. ROLLER BEARING
9. WEAR PLATE
10. SHIM
11. DRIVE GEAR
12. DRIVEN GEAR
13. PUMP BODY
14. SHIM
15. WEAR PLATE
16. ROLLER BEARING
17. SUCTION & PRESSURE PORT "O" RINGS
18. PUMP ADAPTER
19. DRIVE GEAR PIN
20. DRIVE SHAFT
21. SNAP RING
22. SPACER
23. SPRING
24. SLEEVE
25. SLEEVE KEY
26. "O" RING
27. SPACERS
28. SEAL RETAINER
29. INNER SLEEVE
30. INNER SLEEVE "O" RING
31. SNAP RING
32. SNAP RING RETAINER
33. DRIVE SHAFT BALL BEARING
34. OUTER SLEEVE "O" RING
35. OUTER SLEEVE OIL SEAL
36. OUTER SLEEVE
37. RETAINER

Figure J-4

ASSEMBLY OF THE HYDRAULIC PUMP
(Refer to Figure J-5)

A. Coat all parts in hydraulic oil to facilitate reassembly.

B. Install the small snap ring onto the drive shaft. See inset A.

C. Install the backup washer and spring onto the drive shaft. See inset A.

D. Install the sleeve pin and sleeve onto the drive shaft so the slot in the sleeve goes over the pin. See inset A.

E. Install small "O"ring, two spacers and cup onto the drive shaft. See inset A.

F. Place a new "O" ring onto the inner seal sleeve and install the inner seal sleeve onto the drive shaft. See inset A.

G. Install the drive shaft ball bearing snap ring and retainer. See inset A.

H. Place the bearing on the drive shaft so the open side of the bearing is toward the inner sleeve. See inset A.

I. Install a new "O" ring and wiper seal on the outer sleeve and place the sleeve on the drive shaft so the flat side of the sleeve is toward the bearing. See inset A.

J. Install the drive shaft assembly into the pump adapter and install the retainer. ***IMPORTANT*** Tighten the shaft retainer to 35 foot pounds torque. See inset A.

K. Install new "O" rings at the inlet and outlet ports in the pump adapter.

L. Install a large "O" ring and wear plate onto the adapter. ***NOTE*** Make sure the copper colored side of the wear plate is toward the gears. ***IMPORTANT*** Position the wear plate so the 1/2" diameter x 1/16" deep counterbored hole is 180° from the 1/4" seal drain hole in the inlet (suction) port. See inset B.

M. ***IMPORTANT*** To determine the number of shims required between the pump body and wear plates, measure both the pump body and drive gears. (See inset B) - subtract the gear measurement from the body measurement - the difference in measurement must be .003" to .0045" - If gear measurement is .0045" less than the body, the gear must be replaced. If the difference in measurement is less than .003" - shims of .001" and .002" can be installed to obtain a body which is .003" to .0045" larger than the drive gear.

N. Place the pump housing onto the adapter so the dowel pins line up.

O. Install the drive gear pin and drive gear.

P. Install the driven gear so the marks made during disassembly line up. If new gears are installed there is no line up necessary.

Q. Install a shim if required and wear plate onto the pump body. Make sure the copper colored side of the wear plate faces the gears and the 1/2" x 1/16" deep counterbored hole is in line with the same hole in the other wear plate.

R. If the bearing were removed from the cover, install the bearing until the bearing is .007" to .009" below the cover face. ***NOTE*** Make sure the bearing for the drive shaft has the thrust washer behind it. See inset D.

S. Install new "O" rings onto the cover and place the cover onto the pump body.

T. Install the pump cover to adapter capscrews. Torque evenly to 100 foot pounds.

U. After the pump has been assembled, the gear clearance must be checked. Using a torque wrench, turn the pump drive shaft. The correct rotating Torque should be approximately 10 - 13 inch pounds rotating torque.

V. If the rotating torque is MORE than 13 inch pounds torque, disassemble the pump and add either a .001" or .002" shim to bring the rotating torque to approximately 10 to 13 inch pounds. Refer to Paragraph M.

W. If the rotating torque is LESS than 10 inch pounds torque disassemble the pump and remove either a .001" or a .002" shim to bring the rotating torque to approximately 10 to 13 inch pouhds. Refer to paragraph M.

ASSEMBLY OF THE HYDRAULIC PUMP

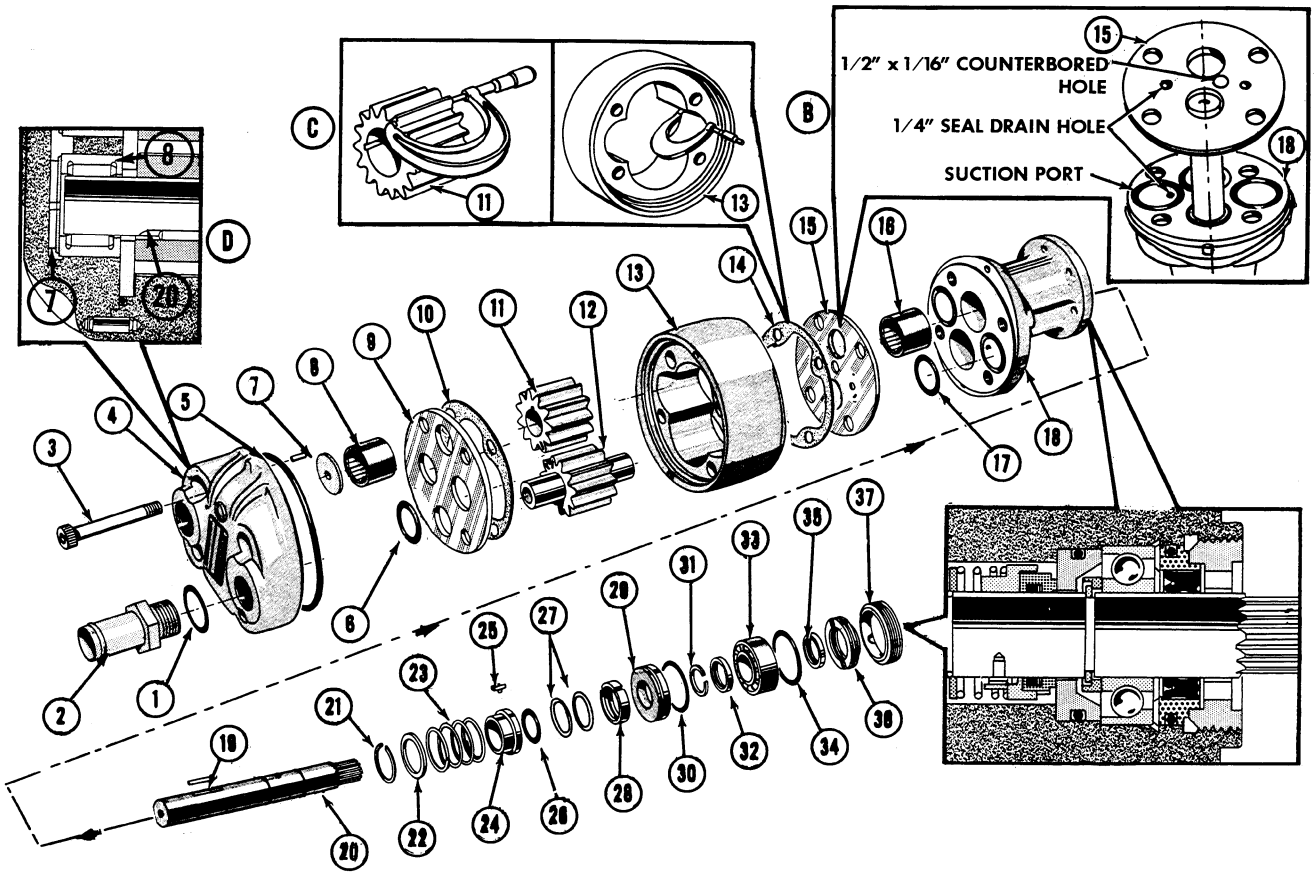

1. INLET NIPPLE "O" RING
2. INLET NIPPLE
3. COVER TO ADAPTER CAPSCREWS
4. PUMP COVER
5. COVER "O" RING
6. SUCTION & PRESSURE PORT "O" RINGS
7. DRIVE SHAFT THRUST WASHER
8. ROLLER BEARING
9. WEAR PLATE
10. SHIM
11. DRIVE GEAR
12. DRIVEN GEAR
13. PUMP BODY
14. SHIM
15. WEAR PLATE
16. ROLLER BEARING
17. SUCTION & PRESSURE PORT "O" RINGS
18. PUMP ADAPTER
19. DRIVE GEAR PIN
20. DRIVE SHAFT
21. SNAP RING
22. SPACER
23. SPRING
24. SLEEVE
25. SLEEVE KEY
26. "O" RING
27. SPACERS
28. SEAL RETAINER
29. INNER SLEEVE
30. INNER SLEEVE "O" RING
31. SNAP RING
32. SNAP RING RETAINER
33. DRIVE SHAFT BALL BEARING
34. OUTER SLEEVE "O " RING
35. OUTER SLEEVE OIL SEAL
36. OUTER SLEEVE
37. RETAINER

Figure J-5

INSTALLATION OF THE HYDRAULIC PUMP

A. Install the pump onto the converter housing. Torque the pump mounting capscrews evenly to 35 - 40 foot pounds.

B. Connect the inlet (suction hose and the outlet (pressure) hose.

3 SPOOL VALVE SYSTEM

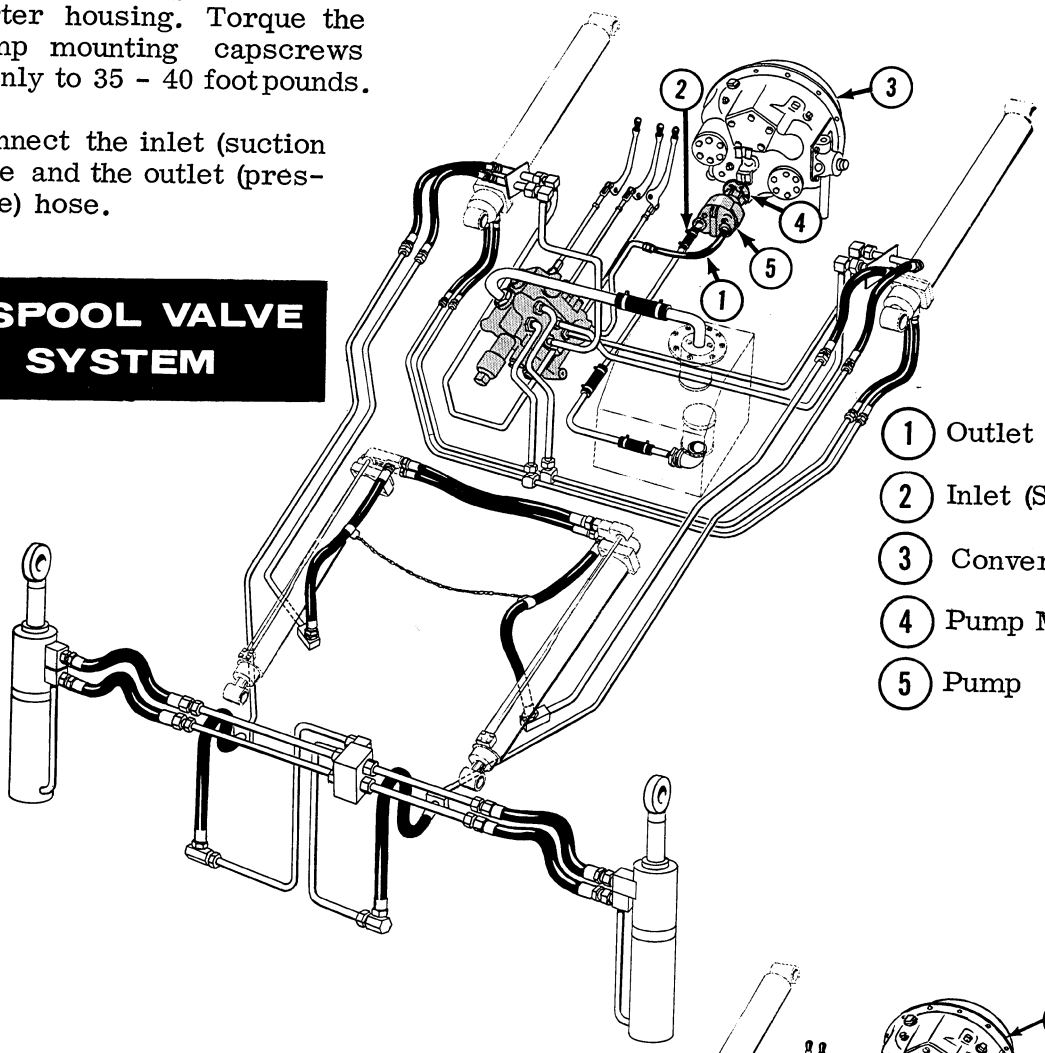

1. Outlet (Pressure) Hose
2. Inlet (Suction) Hose
3. Converter Housing
4. Pump Mounting Bolts
5. Pump

NOTE After the pump has been installed on the Loader, fill the hydraulic reservoir with clean oil. Then start the engine and move both the tilt and lift levers through several full cycles. Now rest the bucket flat on the ground and check the pump for noise and leaks. Shut off the engine and check the reservoir, fill to full mark on dipstick.

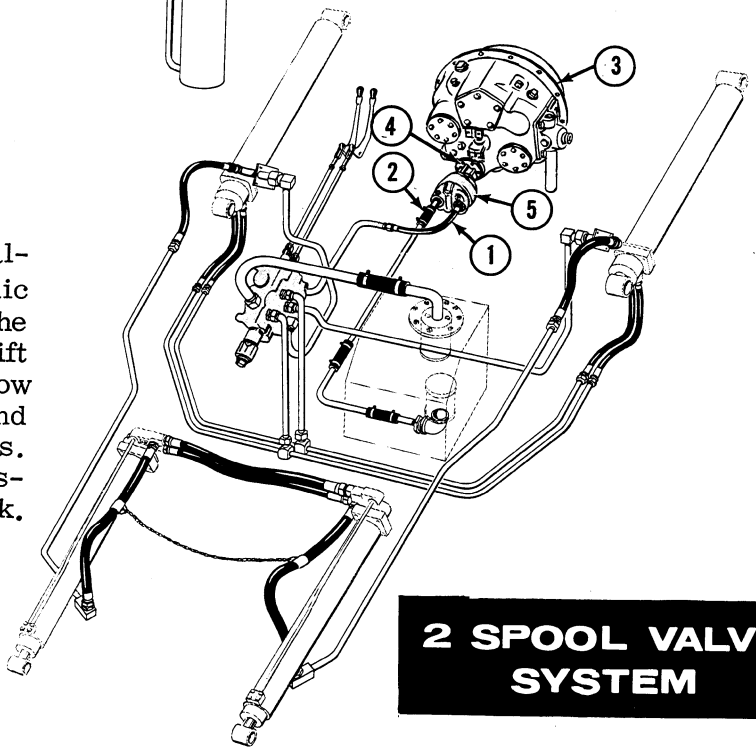

2 SPOOL VALVE SYSTEM

SERVICE SUGGESTIONS

Oil Leakage (Internal or External)

CAUSE	REMEDY
1. Oil leakage between the pump body sections due to damaged "O" rings.	1. Disassemble the pump and install new "O" rings. Refer to Page J-6.
2. Oil transfer from hydraulic system into converter or converter into hydraulic system.	2. Disassemble the pump and install a new drive shaft oil seal.
3. Oil leakage between the pump sections due to improper torque on cover to adapter capscrews.	3. Torque the cover to adapter capscrews evenly to 100 foot pounds.
4. Oil leakage due to cracks in pump body.	4. Replace cracked pump body sections.
5. Oil leakage around pump mounting flange.	5. Remove pump and install new mounting flange gasket.

Erratic Oil Pressure

When a loss of pressure or unstable pressure is encountered the hydraulic system pressure relief valve located at the control valve should be inspected and adjusted if necessary. If the pressure cannot be corrected by adjustment of the relief valve, it will be necessary to check the entire hydraulic system. If there is no obvious cause for the loss of pressure, remove the hydraulic pump for disassembly and inspection.

CAUSE	REMEDY
1. Excessive wear in gear housing.	1. Replace bearings and inspect gear housing. Refer to Page J-6.
2. Excessive wear of the wear plates.	2. Inspect the wear plates and replace if worn. Refer to Page J-6.
3. Cavitation of the pump caused by low reservoir level or air entering system thru suction line.	3. Check reservoir oil level and suction line connections.
4. Damaged drive shaft or gears.	4. Replace necessary parts. Refer to Inspection.

Excessive Noise in Pump

CAUSE	REMEDY
1. Worn or damaged bearings.	1. Disassemble the pump and replace bearings. Refer to Inspection.
2. Improper torque on pump cover to adapter capscrews.	2. Torque the pump cover to adapter capscrews evenly to 100 foot pounds.
3. Wear plates installed improperly. (The 1/2" x 1/16" deep counterbore installed on suction side of gears).	3. Remove pump and inspect. Refer to Assembly Page J-8.
4. Pump chatter.	4. Malfunction of pressure relief valve located in control valve. Refer to Section D or DD.
5. Cavitation of the pump caused by low reservoir level or air entering system thru suction line.	5. Check reservoir oil level and suction line connections.
6. Damaged drive shaft or gears.	6. Replace necessary parts. Refer to Inspection.

TOOLS REQUIRED

A tool kit designed especially for servicing the 2000A Series Gear Type Pump is available from the Kent-Moore Organization, Inc. 28635 Mound Road, Warren, Michigan.

The Standard Tool Kit No. J-8566 consists of the following items:

	Description	Part No.
1	Bearing Puller	J-8542
2	Seal Driver	J-8544
3	Bearing Driver	J-8546
4	Handle for Seal and Bearing Drivers	J-7079-2
5	Spanner Tool	J-8540
6	Shaft Driver	J-8559
7	Shaft Thimble	J-8541
8	Seal Assembly Compressor	J-8543
9	Allen Head Adapter	J-8558

SECTION
G

SERVICING THE
POWER STEERING CYLINDER
AND CONTROL VALVE
WITH REACTION LIMITING PLUNGER

●

STEERING GEAR BOX
ON
CASE 4 WHEEL DRIVE UNIT LOADERS

PRINTED IN U.S.A.

TABLE OF CONTENTS

QUICK REFERENCE GUIDE FOR CHECKING STEERING LINKAGE G-3

POWER STEERING ACTUATOR, VALVE AND CYLINDER . . . . . G-4 thru G-27

Introduction . . . . . G-4 thru G-7

How It Works G-8

Oil Flow Diagrams And Explanations . . . . . G-10 thru G-15

Engine Running - Steering Straight Ahead G-10

Left Turn G-12

Right Turn G-14

Pressure Check G-16

Removal and Disassembly of The Actuator, Valve and Cylinder G-18

Inspection G-20

Assembly Of The Cylinder, Valve and Actuator G-22

Adjustment And Installation Of The Steering Cylinder G-24

Rear Wheel Toe-In Or Toe-Out Adjustment G-26

Adjustment Of Turning Angle When Rear Axle Steering Universal Or Rear Axle Stop Bolt Is Installed G-26

STEERING GEAR BOX . . . . . G-28 thru G-37

Introduction G-28

How It Works G-28

Steering Gear Adjustments . . . . . G-30 thru G-31

Adjustment Of Ball Thrust Bearings On Cam G-30

Adjusting Backlash Of The Lever Shaft Studs To Cam G-30

Removal And Disassembly Of Steering Gear Box G-32

Inspection G-34

Assembly And Installation Of The Steering Gear Box G-36

BLEEDING THE POWER STEERING SYSTEM G-38

SERVICE SUGGESTIONS . . . . . G-39 and G-40

GUIDE FOR CHECKING STEERING LINKAGE

Turning Angle Adjustment

The correct turning angle for Case 4 Wheel Drive Unit Loaders is 25° with the Loader on a level surface.

If an unequal turning angle is encountered with the Loader, the following systematic checks must be performed to correct the turning angle. Failure to follow this exact procedure could result in serious damage to the steering axle "universal joint."

1. Loosen the locknuts and turn the steering bracket stop bolts in as far as possible, Figure G-1

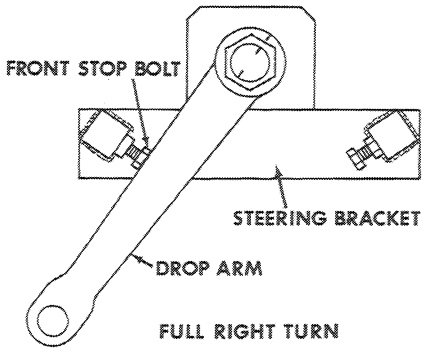

Figure G-1

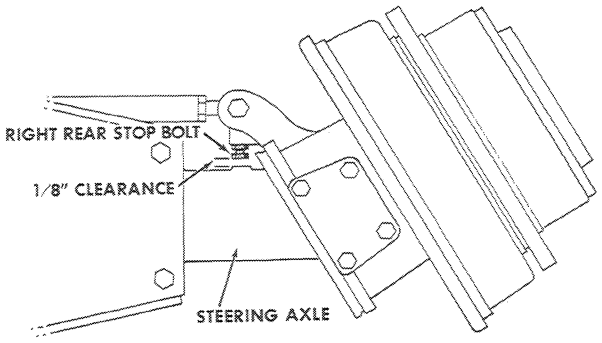

Figure G-2

2. Turn the steering wheel to the right until 1/8" is obtained between the right rear steering stop bolt and the axle, Figure G-2.

3. Turn the steering bracket stop bolt out until it contacts the drop arm, Figure G-1. Tighten the lock nut.

4. Turn the steering wheel to the left until 1/8" is obtained between the left rear steering stop bolt and the axle, Figure G-3.

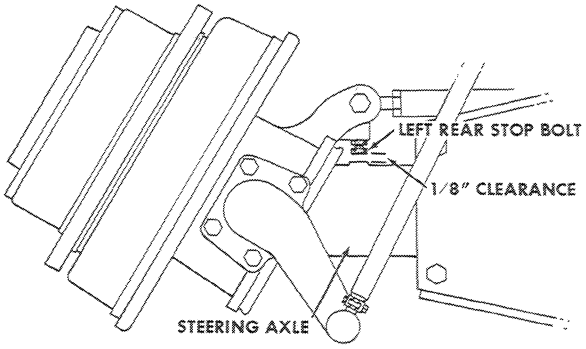

Figure G-3

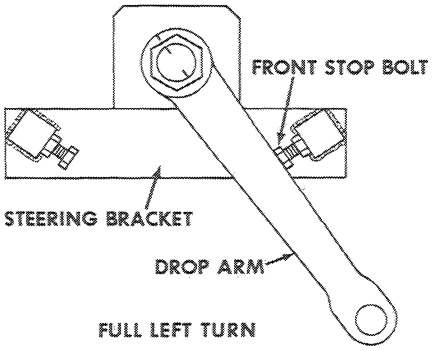

Figure G-4

5. Turn the bracket stop bolt out until it contacts the drop arm, Figure G-4. Tighten the lock nut.

REFER TO PAGES G-24 THRU G-27 FOR COMPLETE TURNING ANGLE AND DROP ARM ADJUSTMENTS.

Rear Wheel Toe-In or Toe-Out

On Case 4 Wheel Drive Unit Loaders there must be no toe-in or toe-out of the rear wheels. A toe-in or toe-out condition causes the rear wheels to track improperly. Thus at high speeds, a toe-in or toe-out condition allows the Loader to wander.

REFER TO PAGE G-26 FOR COMPLETE TOE-IN AND TOE-OUT ADJUSTMENTS.

POWER STEERING SYSTEM

(Refer to Figure G-5)

General

The power steering reservoir and pump supply the fluid to the steering system.

Pages G-8 thru G-15 of this section give the "How It Works" and Oil Flow Diagrams of the Power Steering System.

The Reservoir

The Reservoir contains the fluid supply for the Loader power steering system. The fluid capacity of the reservoir exceeds the requirements of the system preventing the steering pump from ever drawing air into the system. When the Loader engine is running, the pump draws fluid from the reservoir. The fluid circulates through the steering system and returns to the reservoir where it is filtered before recirculation.

The Filter

The Filter is located in the steering reservoir. The filter removes dirt and foreign material from the fluid as it returns to the reservoir. Though fluid may remain in various parts of the system, for some time, eventually, all fluid returns to the reservoir where it is filtered and cleaned before re-entering the system.

The Pump

The Pump operates continuously whenever the Loader engine is running drawing fluid from the reservoir and circulating the fluid through the steering system back to the reservoir. A relief valve is provided in the pump as a safety feature protecting the operator as well as the Loader steering system. If the steering mechanism is damaged in such a manner that excessive fluid is built up, the relief valve will open before the hydraulic force can damage the steering mechanism or build up sufficient pressure to rupture hose lines and seals.

The Hydraulic Lines

The Hydraulic Lines direct the flow of fluid to and from the components of the power steering system.

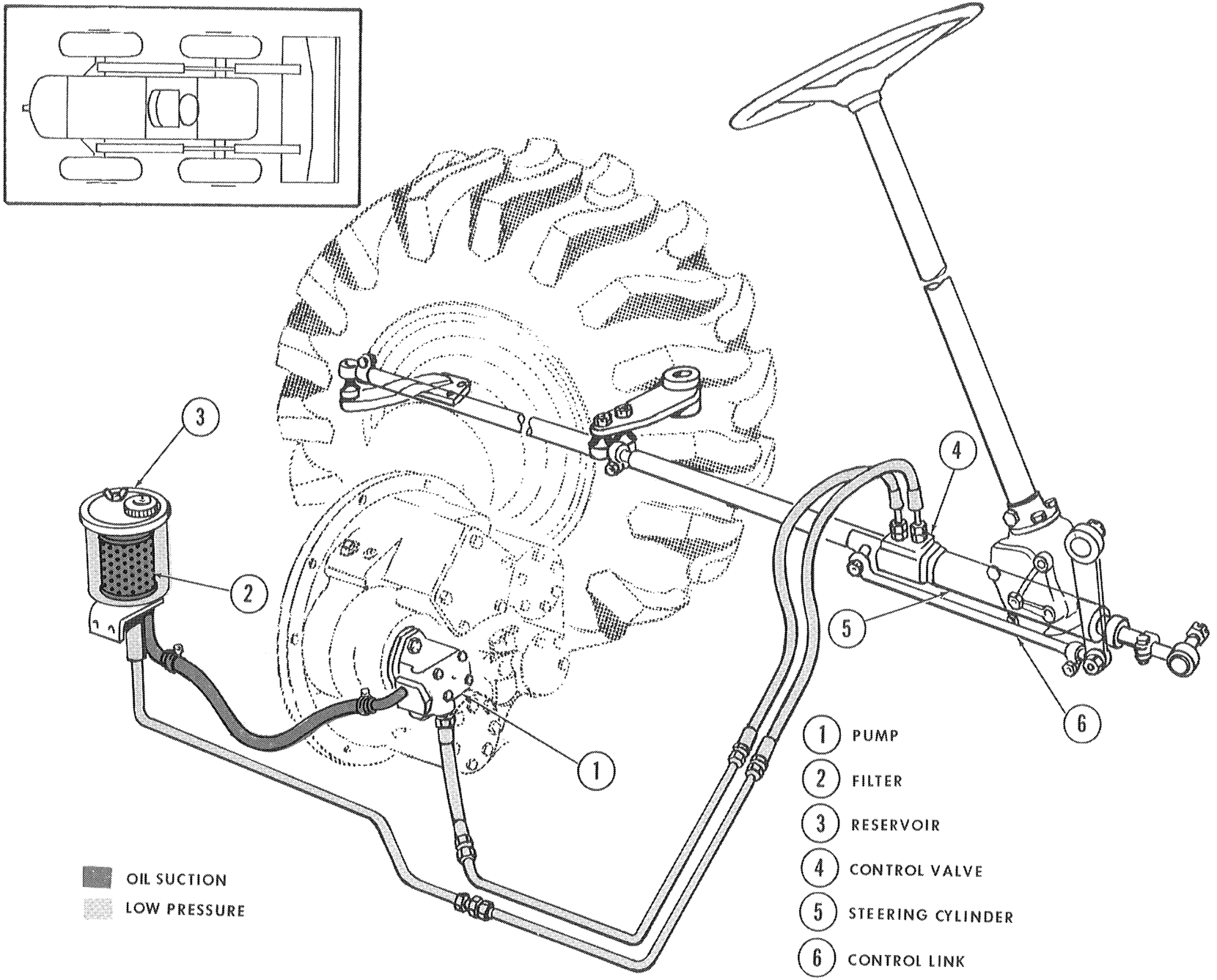

Figure G-5. Oil Flow in the Power Steering System when the Spool is Centered (Steering Straight Ahead)

POWER STEERING SYSTEM (Continued)

(Refer to Figure G-6)

The Steering Wheel

The Steering Wheel is splined to the steering shaft and cam assembly. The power steering unit is designed to reduce steering effort without losing the "feel" of steering. The cylinder does not assist until a manual steering effort of approximately 4 to 6 pounds is exerted on the steering wheel. The steering cylinder will turn the wheels as far as directed by the movement of the steering wheel as it would with a mechanical unit. When the steering wheel is turned, the movement of the drag link moves the spool in the control valve body directing fluid to the steering cylinder. After the control valve has responded to the signal from the steering wheel, the spool will return to neutral and the steering cylinder movement stops. Should the fluid pressure fail for any reason, the Loader can be steered manually through the mechanical linkage.

The Steering Control Valve

The Steering Control Valve by means of passages and ports in the valve body and lands and grooves on the spool, controls and directs the flow of pressurized hydraulic oil to the cylinder as well as redirecting oil back to the reservoir.

The Steering Cylinder

The Steering Cylinder contains the piston and piston rod. The force of pressurized oil carried through the ports in the cylinder is exerted on the piston and moves the cylinder either extending or retracting the piston rod, thereby assisting the movement of the linkage. This hydraulic assistance reduces the effort required by the operator to turn the steering wheel.

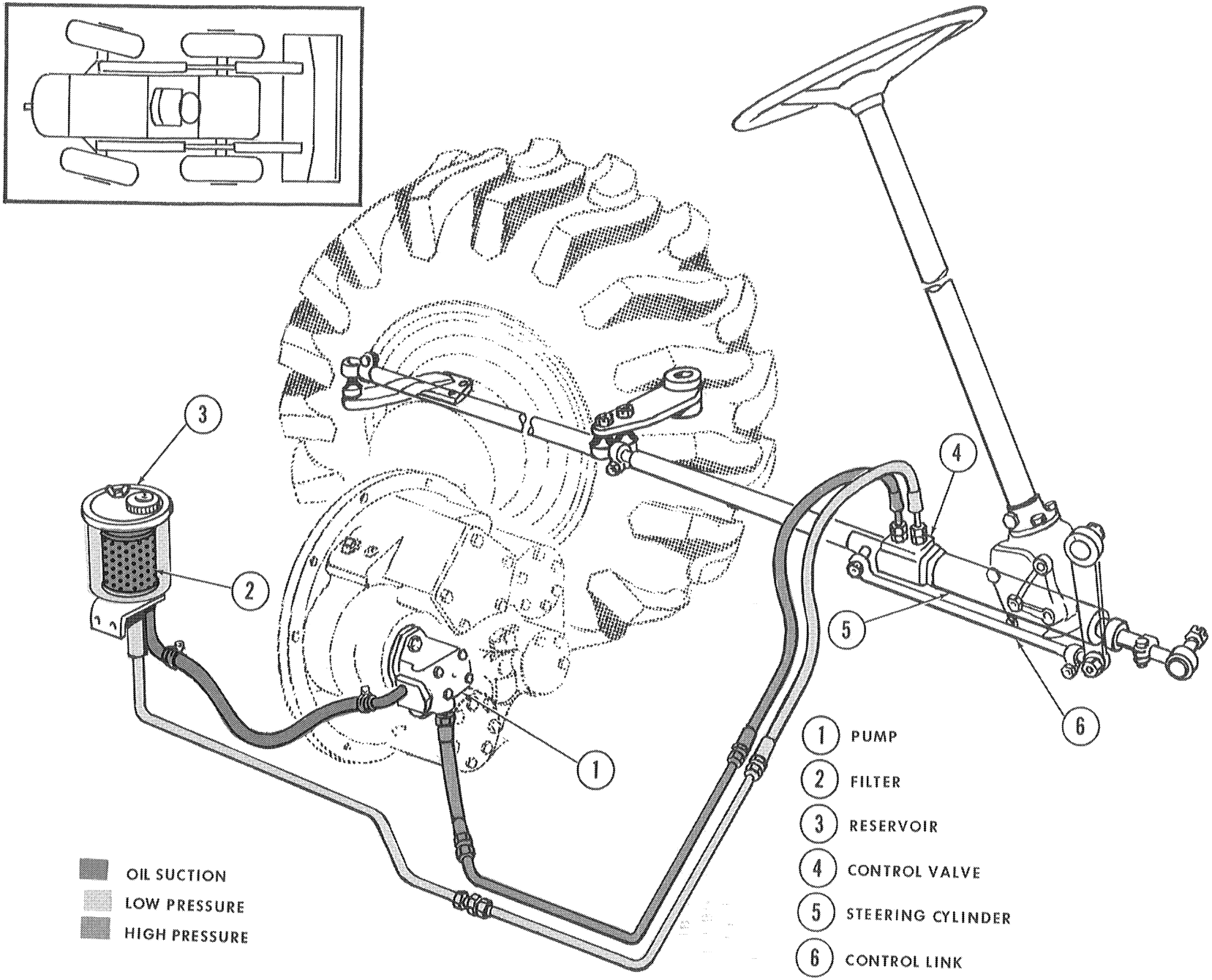

Figure G-6. Oil Flow in the Power Steering System when the Valve and Cylinder are activated (Left or Right Turn)

POWER STEERING ACTUATOR, VALVE AND CYLINDER

HOW IT WORKS

(Refer to Figure G-7)

The Hydraulic Power Steering is a combination of the standard worm and gear type mechanical unit and a hydraulic cylinder connected to the steering drop arm to reduce the steering effort.

The combined power steering cylinder and valve unit used on Case 4 Wheel Drive Unit Loaders consists primarily of three parts:

The Actuator

The Actuator consists of an outer sleeve and extension tube, an inner sliding sleeve and a ball stud. When the steering wheel is turned in either direction, it moves the steering drop arm which is linked to the ball stud mounted inside the inner sliding sleeve. When the steering wheel is turned, the combination of the drop arm, drag link and the ball stud moves the inner sliding sleeve either forward or rearward. The sliding sleeve in turn moves the control valve spool.

The Control Valve

The Control Valve consists of the valve body, valve spool, reaction limiting plunger and the check valve assembly. When the control valve spool is activated, the lands and grooves on the control valve spool either open or close ports and passages, directing fluid to the cylinder as well as redirecting fluid back to the reservoir. The reaction limiting plunger helps to maintain a constant turning effort. If the engine stops for any reason a check ball incorporated in the control valve unseats and the fluid in the power cylinder is then free to flow back to the reservoir. In this way the Loader can be steered manually without a lock up of fluid in the power steering cylinder. Whenever the engine is running, the check ball is seated.

The Power Cylinder

The Power Steering Cylinder contains the piston, piston rod, rings and packing. The force of pressurized oil directed by the control valve spool, is exerted on the piston either extending or retracting the cylinder.

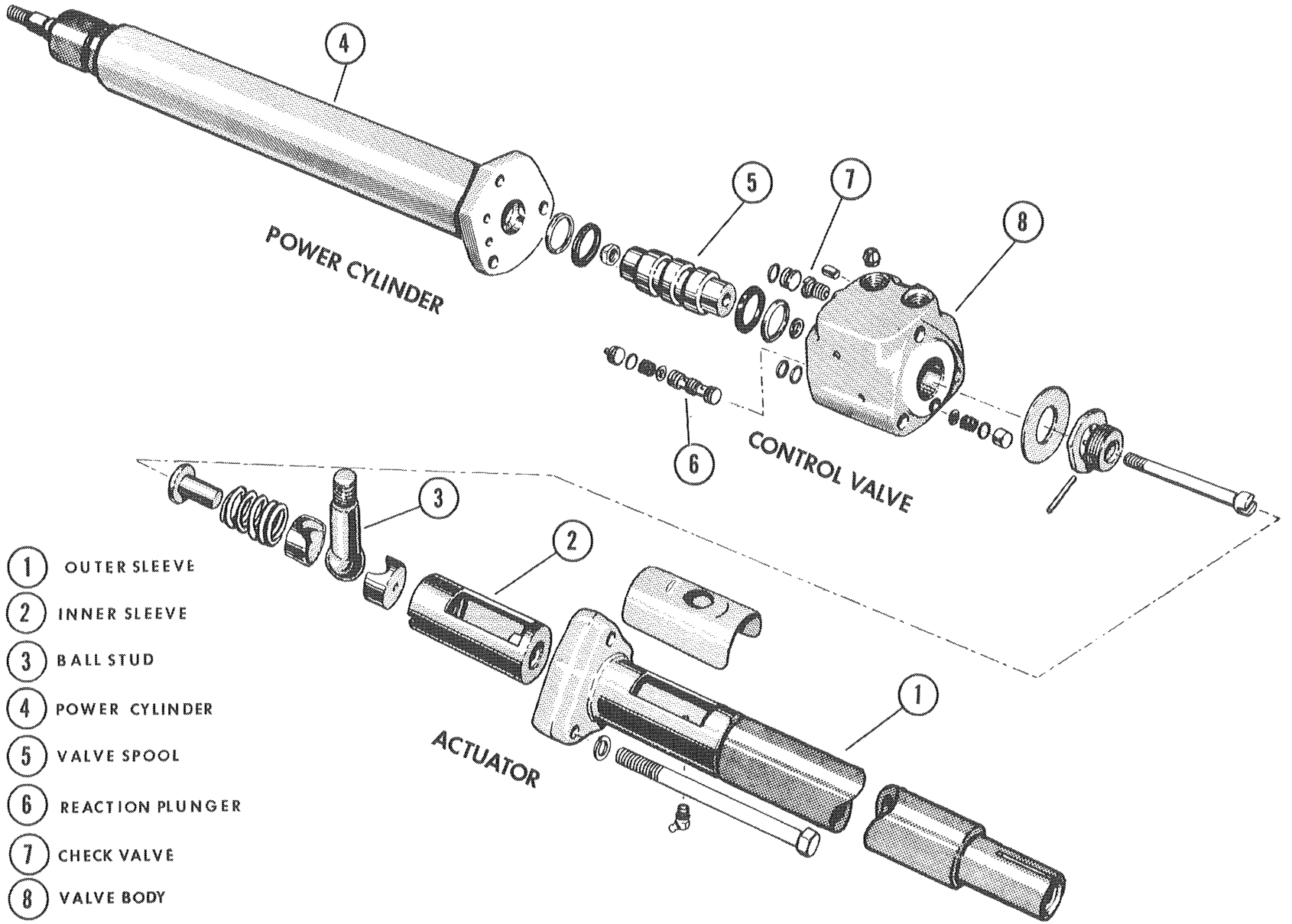

Figure G-7. Power Steering Actuator, Control Valve and Cylinder

OIL FLOW - ENGINE RUNNING - STEERING STRAIGHT AHEAD

(Refer to Figure G-8)

With the Loader engine running, but the steering wheel stationary, the fluid from the power steering pump flows into the control valve at the inlet pressure port and since the valve spool is centered in the valve housing, the oil flows to and around the spool and back through the return port to the reservoir.

With the valve spool in the centered position, there is no flow of oil to or from the power steering cylinder.

Circulating (Low) Pressure

Circulating (Low) Pressure (indicated in light green) is the hydraulic oil pressure created by a volume of oil flowing through the normal restrictions of the hydraulic lines, control valve and filter.

Static Pressure

Static Pressure (indicated in dark green) is the pressure created by oil locked in the power steering cylinder. Static pressure is characterized by no oil flow. The oil locked in the cylinder remains a constant, equalizing pressure which is sufficient to retain the piston in any given location within the cylinder.

OIL FLOW - ENGINE RUNNING - STEERING STRAIGHT AHEAD

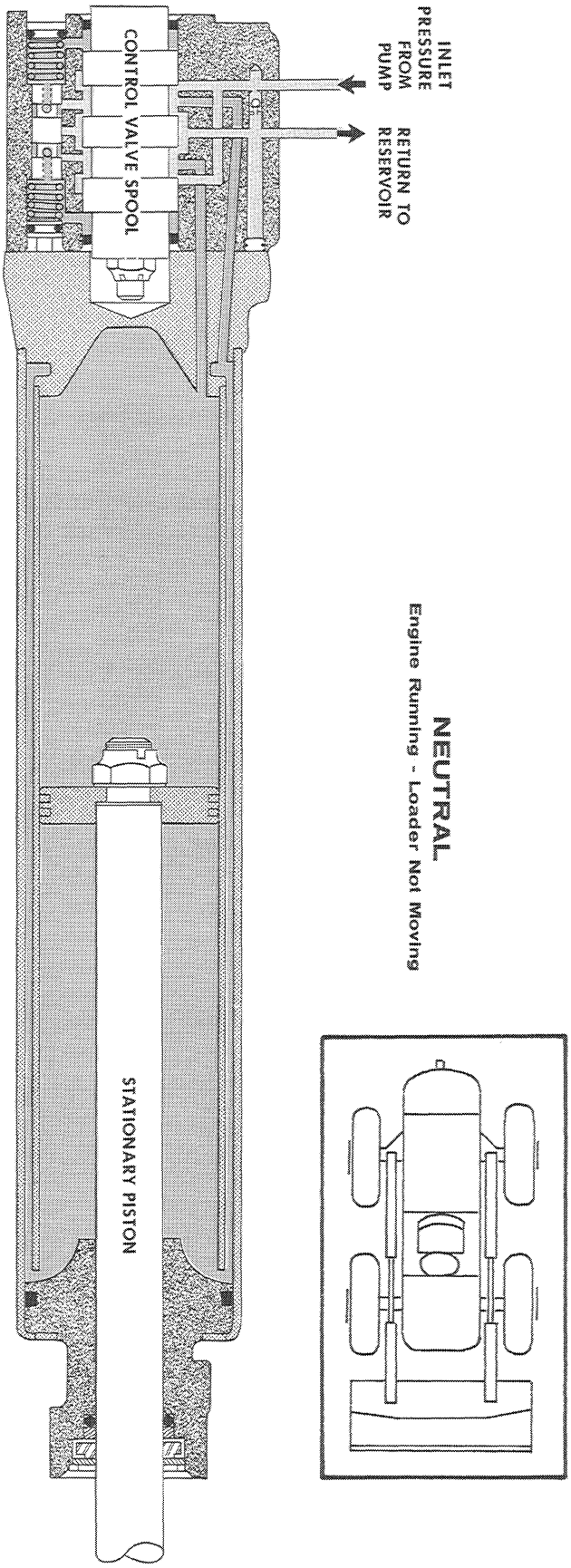

Figure G-8

OIL FLOW - LEFT TURN

(Refer to Figure G-9)

With the Loader engine running and the steering wheel turned to the left the combination of drop arm and drag link moves the valve spool rearward allowing oil to be directed through porting to the piston rod side of the power steering cylinder. Oil displaced from the valve side of the power cylinder escapes through the return port back to the reservoir. As the spool moves rearward, a small amount of oil from the rear reaction chamber is displaced thru porting into the reaction plunger and spring chamber forcing the plunger forward against the reaction spring. The rate of oil displacement from the rear reaction chamber controls the resistance to spool movement helping to maintain a constant 4 to 6 pound steering wheel effort regardless of engine speed. As the reaction plunger continues to move forward, ports are uncovered which return displaced oil to the reservoir.

Circulating (Low) Pressure

Circulating (Low) Pressure (indicated in light green) is the hydraulic oil pressure created by a volume of oil flowing through the normal restrictions of the hydraulic lines, control valve and filter.

Working (High) Pressure

Working (High) Pressure (indicated in red) is the pressure created by the pump forcing a volume of oil through the hydraulic lines and control valve into the cylinder in an effort to move the cylinder. The pump pressure continues to build up in the power steering system until either the cylinder is moved by the force of the oil or the pressure relief valve in the power steering pump body is forced open allowing oil to return to the reservoir.

Reaction Chamber Pressure

Reaction Chamber Pressure (indicated in light red) is the pressure created by the valve spool moving either forward or rearward in the valve housing. The reaction chamber pressure then moves the reaction plunger either forward or rearward against the reaction spring pressure.

OIL FLOW - LEFT TURN

Figure G-9

OIL FLOW - RIGHT TURN

(Refer to Figure G-10)

With the Loader engine running and the steering wheel turned to the right, the combination of drop arm and drag link moves the valve spool forward allowing oil to be directed through porting to the valve side of the power steering cylinder. Oil displaced from the piston rod side of the power cylinder escapes through the return port back to the reservoir. As the spool moves forward, a small amount of oil from the front reaction chamber is displaced thru porting into the reaction plunger and spring chamber, forcing the plunger rearward against the spring. The rate of oil displacement from the front reaction chamber controls the resistance to spool movement helping to maintain a constant 4 to 6 pounds steering wheel effort regardless of engine speed. As the reaction plunger continues to move rearward, ports are uncovered which return displaced oil to the reservoir.

Circulating (Low) Pressure

Circulating (Low) Pressure (indicated in light green) is the hydraulic oil pressure created by a volume of oil flowing through the normal restrictions of the hydraulic lines, control valve and filter.

Working (High) Pressure

Working (High) Pressure (indicated in red) is the pressure created by the pump forcing a volume of oil through the hydraulic lines and control valve into the cylinder in an effort to move the cylinder. The pump pressure continues to build up in the power steering system until either the cylinder is moved by the force of the oil or the pressure relief valve in the power steering pump body is forced open allowing oil to return to the reservoir.

Reaction Chamber Pressure

Reaction Chamber Pressure (indicated in light red) is the pressure created by the valve spool moving either forward or rearward in the valve housing. The reaction chamber pressure then moves the reaction plunger either forward or rearward against the reaction spring pressure.

OIL FLOW - RIGHT TURN

Figure G-10

RELIEF VALVE PRESSURE CHECK

(Refer to Figure G-11)

The pressure relief valve in the power steering pump has a 1000 PSI opening pressure. The valve is replaceable. It is not adjustable.

For correct pressure check proceed as follows:

1. Remove the 1/8" pipe plug from the pump cover.

IMPORTANT

On some models it will be necessary to disconnect the pressure hose from the pump at the pressure tube. Install a D26337 Test Tee between the pump pressure hose and the pressure tube.

NOTE The D26337 Test Tee can be ordered through J. I. Case Co., Central Parts Division, Racine, Wisconsin.

2. Install the 4501AA or the A22791 Pressure Gauge in the pump cover or the pipe tee in the pressure line.

NOTE The 4501AA or the A22791 Pressure Gauge can be used on all Case Unit Loaders and purchased through your Case Dealer or J. I. Case Co. Central Parts Division, Racine, Wisconsin.

3. Start the Loader engine and run at 1500 RPM.

4. Place the Loader parallel with a solid wall so when the steering wheel is turned, the tire must come in contact with the wall before contact is made between the drop arm and the bracket steering stops. Refer to insets.

5. Observe the pressure gauge reading. The pressure gauge should read between 950 - 1050 PSI with the engine running at 1500 RPM. This pressure gauge reading must be observed carefully. When the relief valve opens, the pressure will drop off sharply.

IMPORTANT

As the pressure drops off, do not continue to hold the tire against the wall as it may cause damage to the power steering pump relief valve

6. If the pressure gauge registers below 950 or above 1050 PSI, the relief valve must be replaced. Refer to Section PP.

PRESSURE CHECK

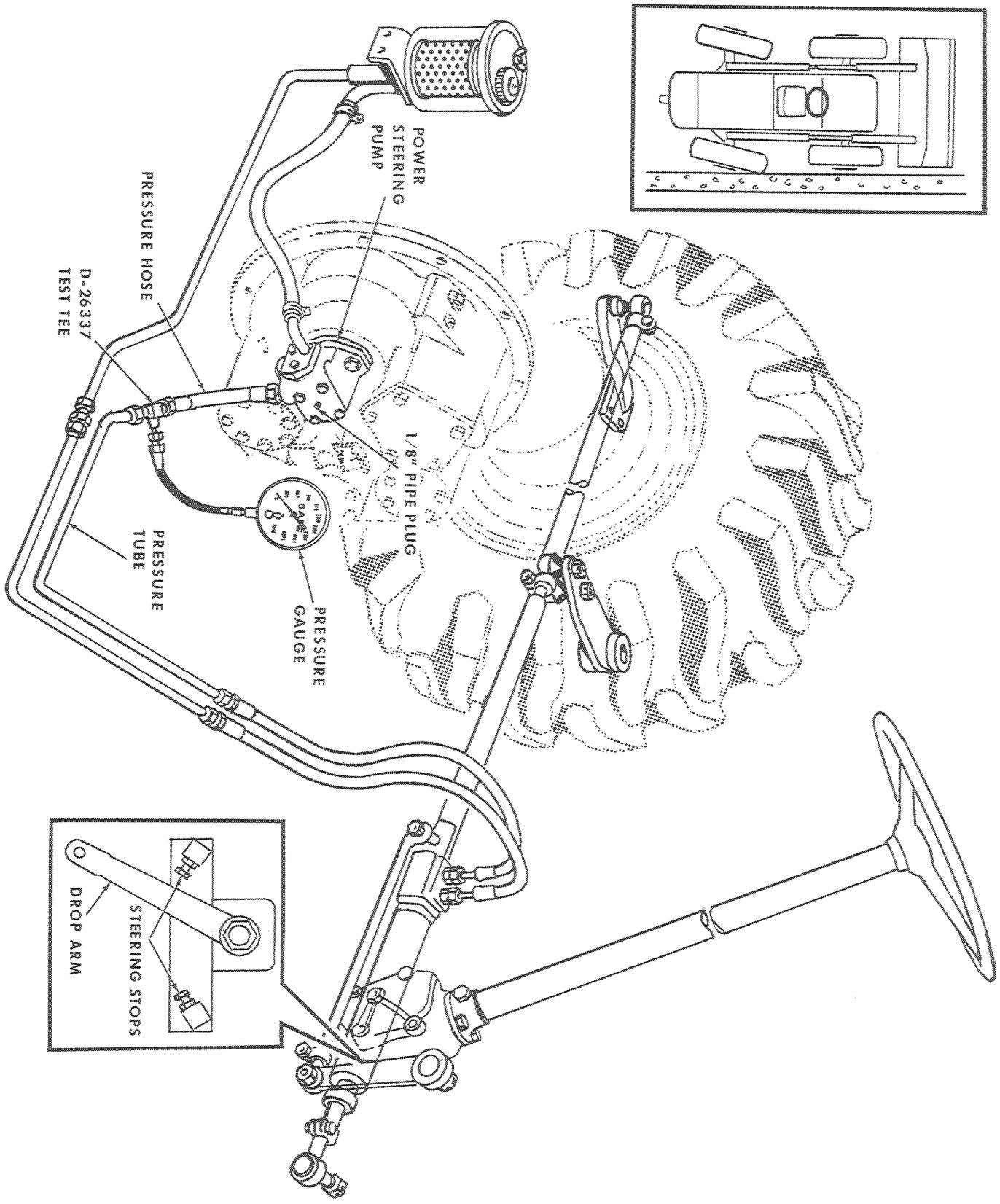

Figure G-11

REMOVAL OF THE ACTUATOR - VALVE AND CYLINDER

(Refer to Inset - Figure G-12)

A. Disconnect the pressure and return lines at the control valve.

NOTE Cap the lines and the ports in the control valve immediately to prevent the entry of dirt or foreign material into the steering system.

B. Disconnect the actuator ball stud from the control link.

C. Remove the nut from the cylinder tie rod end and disconnect the tie rod from the chassis.

D. Remove the nut from the actuator tie rod end and disconnect the tie rod from the intermediate steering lever. The steering cylinder can now be removed from the Loader.

DISASSEMBLY OF THE ACTUATOR - VALVE AND CYLINDER

(Refer to Figure G-12)

A. Remove the three bolts attaching the outer sleeve to the valve housing and cylinder.

B. Disconnect the outer sleeve and valve housing from the cylinder and remove the lock nut from the spool bolt.

C. Remove the valve housing to flange plate.

D. Remove the dust shield and grease fitting.

E. Slide the ball stud forward as far as possible in the outer sleeve and remove the stop screw lock pin.

F. Turn the stop screw out from the inner sleeve.

G. Remove the stop screw, spring stop, ball stud spring and valve spool bolt from the inner sleeve.

H. Remove the inner sleeve, ball stud seats and ball stud.

CAUTION

SPECIAL CARE MUST BE TAKEN TO PROTECT THE SPOOL EDGES AND THE BORE OF THE CONTROL VALVE HOUSING FROM DAMAGE DURING DISASSEMBLY.

I. Before removing the valve spool, remove the bushing and seal from either end of the spool - then remove the valve spool. WHEN INSTALLING THE VALVE SPOOL INSTALL IT IN THE SAME POSITION IT WAS REMOVED.

J. If the flared tube seats in the valve are damaged, scored or cracked, remove them by using an "easy out." Turn the "easy out" into the seat and pull the seat out using a pliers.

K. Remove the check valve plug by pushing it out with a Allen Head Wrench.

L. Unscrew the check valve from the control valve body.

M. To remove the reaction limiting plunger, use a needle nose plier to remove the plug on the cylinder side of the control valve. The spring, washer and plunger can be removed. The plug, washer and spring on the actuator side of the valve can then be removed.

N. Clean the seal cavity at the piston rod end of the cylinder with solvent and compressed air.

O. Remove the snap ring which retains the oil seals.

P. Remove the seal components by inserting an air hose in the fluid port of the cylinder and plugging the remaining port.

CAUTION

DO NOT ALLOW ANYONE TO STAND IN FRONT OF THE PISTON ROD. EXTREME AIR PRESSURE IS BUILT UP AND WILL PUSH THE SEALS FORWARD WITH EXTREME FORCE.

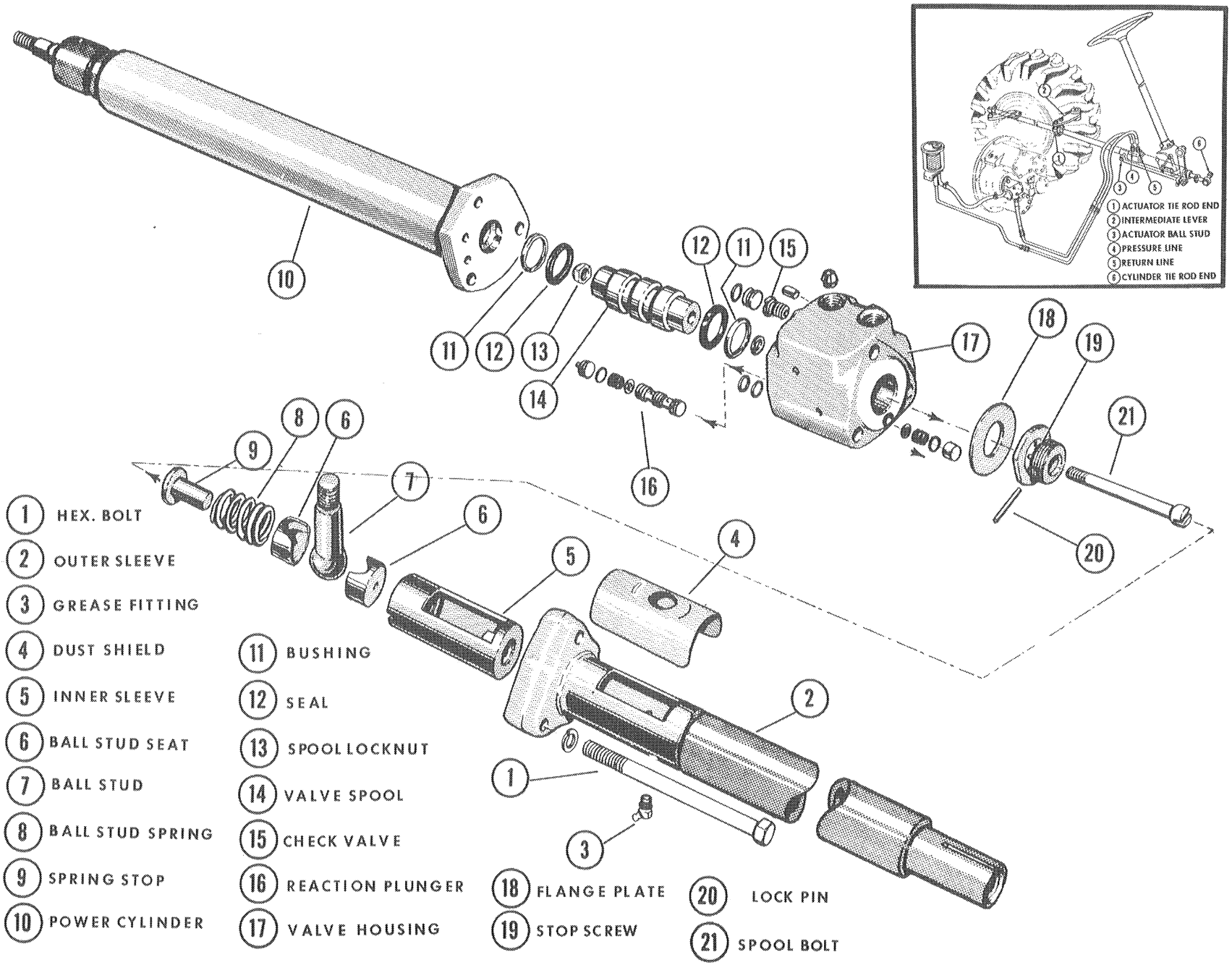
1 HEX. BOLT
2 OUTER SLEEVE
3 GREASE FITTING
4 DUST SHIELD
5 INNER SLEEVE
6 BALL STUD SEAT
7 BALL STUD
8 BALL STUD SPRING
9 SPRING STOP
10 POWER CYLINDER
11 BUSHING
12 SEAL
13 SPOOL LOCKNUT
14 VALVE SPOOL
15 CHECK VALVE
16 REACTION PLUNGER
17 VALVE HOUSING
18 FLANGE PLATE
19 STOP SCREW
20 LOCK PIN
21 SPOOL BOLT
1 ACTUATOR TIE ROD END
2 INTERMEDIATE LEVER
3 ACTUATOR BALL STUD
4 PRESSURE LINE
5 RETURN LINE
6 CYLINDER TIE ROD END

Figure G-12

INSPECTION

(Refer to Figure G-13)

With the actuator and control valve disassembled, the component parts can easily be cleaned and inspected for wear, cracks, score marks and burrs. All parts that are worn or damaged must be replaced.

Actuator

BALL STUD

Clean and inspect the ball stud for cracks, burrs or score marks. If the ball stud is worn it may cause binding in the steering system.

INNER SLEEVE

The inner sleeve and bore must be cleaned and inspected for burrs, nicks and score marks.

BALL STUD SEATS

The ball stud seats must be carefully cleaned and inspected for nicks, burrs or score marks especially where they come in contact with the ball stud.

LOCK PIN

The lock pin must be inspected especially for cracks or breakage. If the lock pin is broken it could cause binding when turned right or left because of the stop screw becoming loose. If the lock pin is broken or has slipped out of place, it could also cause steering in one direction only.

Control Valve

SEALS AND BUSHINGS

Whenever the control valve is disassembled replace all seals, bushings and "O" rings.

VALVE SPOOL

The valve spool must be cleaned and inspected for burrs or score marks. Clean the spool with hydraulic oil and compressed air.

REACTION LIMITING PLUNGER

Inspect the plunger and plugs for nicks or score marks. Make sure the holes are open in the plunger. Inspect for broken springs. Replace the "O" rings on the plugs.

CHECK VALVE

Inspect the check valve and plug for scratches and burrs. Replace the "O" ring on the check valve plug. If the ball does not seat there will be no power assist in the steering of the Loader.

TUBE SEATS

Inspect the tube seats for scratches and cracks. If they have scratches or cracks they must be replaced because the tubes will not seat properly and leakage will result.

Power Cylinder

If the seals are leaking, install a new Cylinder Seal Kit. Inspect the piston rod for scratches or score marks. If the piston rod is scored the cylinder assembly must be replaced.

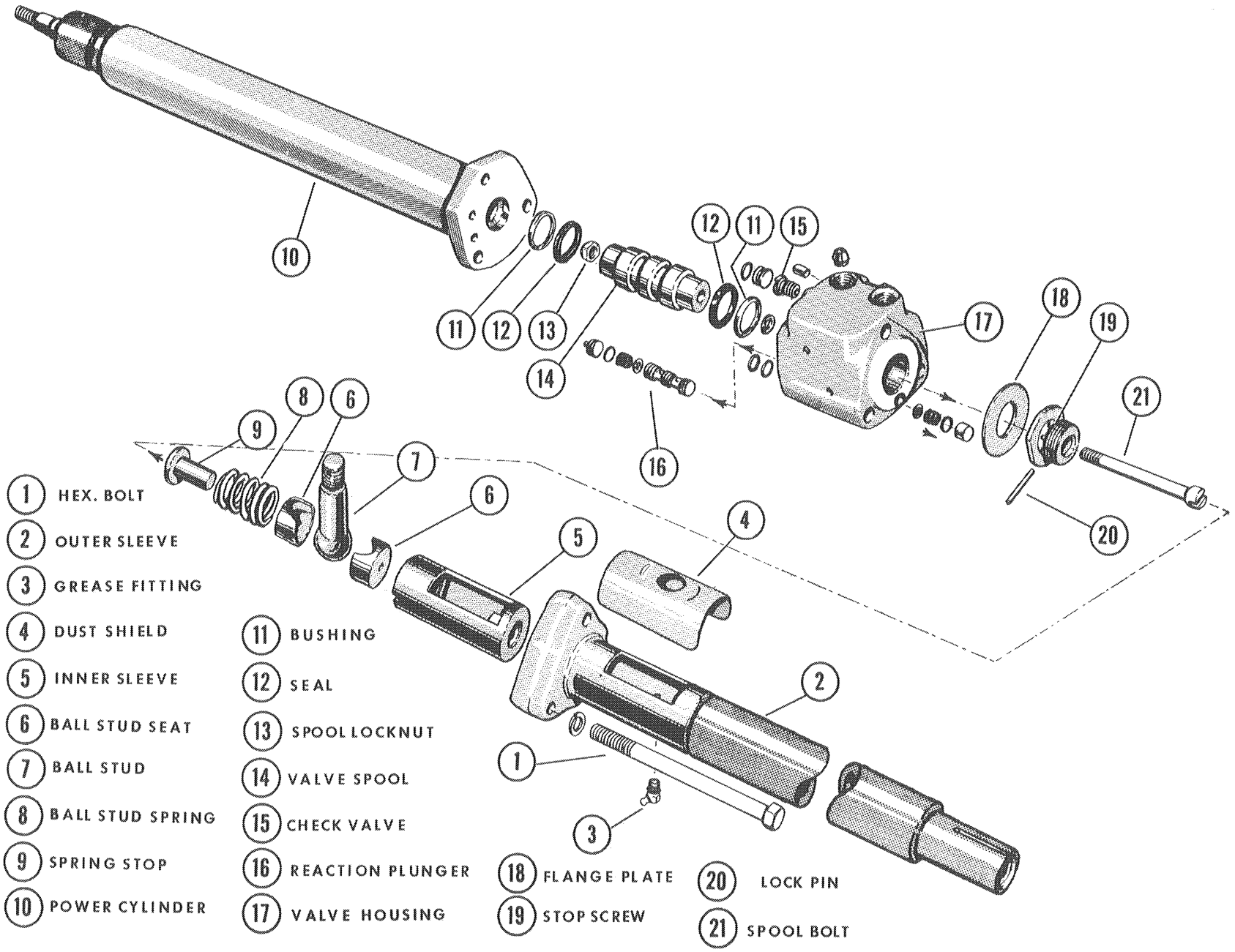
1 HEX. BOLT
2 OUTER SLEEVE
3 GREASE FITTING
4 DUST SHIELD
5 INNER SLEEVE
6 BALL STUD SEAT
7 BALL STUD
8 BALL STUD SPRING
9 SPRING STOP
10 POWER CYLINDER
11 BUSHING
12 SEAL
13 SPOOL LOCKNUT
14 VALVE SPOOL
15 CHECK VALVE
16 REACTION PLUNGER
17 VALVE HOUSING
18 FLANGE PLATE
19 STOP SCREW
20 LOCK PIN
21 SPOOL BOLT

Figure G-13

ASSEMBLY OF THE CYLINDER - CONTROL VALVE AND ACTUATOR

(Refer to Figure G-14)

A. If the seal components have been removed because of leakage a new cylinder seal kit must be installed. Refer to inset. Install the "O" ring, seal and bushing and then press the dust seal into the cyl-cylinder housing.

B. Install the scraper washer and snap ring using a No. 1 Truarc internal snap ring pliers.

C. To assemble the control valve, install the valve plugs with "O" rings, washers, springs and reaction limiting plunger.

D. Screw the check valve into the control valve housing until it bottoms. Install the check valve plug with "O" ring.

E. If the flared tube seats have been removed because they were scored or cracked, press new tube seats into the control valve housing until they bottom.

F. Install the valve spool in the control valve housing making sure it is installed in the same position end for end as it was removed.

G. Install the "O" rings and bushings at both ends of the spool, using care not to cut or damage the "O"rings. Install new "O" rings in the valve housing ports to the cylinder.

H. To assemble the actuator, slide one ball stud seat into the inner sleeve and slide the inner sleeve into the outer sleeve. Install the ball stud and other ball stud seat.

I. Install the ball stud spring, valve spool bolt, spring stop and stop screw.

J. Turn the stop screw down solid, until it bottoms against the inner sleeve and then back the screw off until the holes line up with the slot in the inner sleeve.

K. Slide the ball stud forward and insert the stop screw lock pin, rotating the spool bolt until the slot in the bolt head lines up with the pin.

IMPORTANT

THE LOCK PIN MUST NOT BE ALLOWED TO SLIP OUT OF ITS SLOT INTO THE FLANGE CAVITY. IF IT DOES IT WILL NOT ALLOW THE BALL STUD AND INNER SLEEVE TO TRAVEL ITS FULL STROKE.

L. Install the dust shield and grease fitting.

M. Install the valve housing to flange plate.

N. Assemble the valve housing to the actuator by inserting the spool bolt thru the hole in the spool. The locknut should be tightened 75 inch pounds and then backed off 1/6 turn. The nut must be snug against the spool, but not tight.

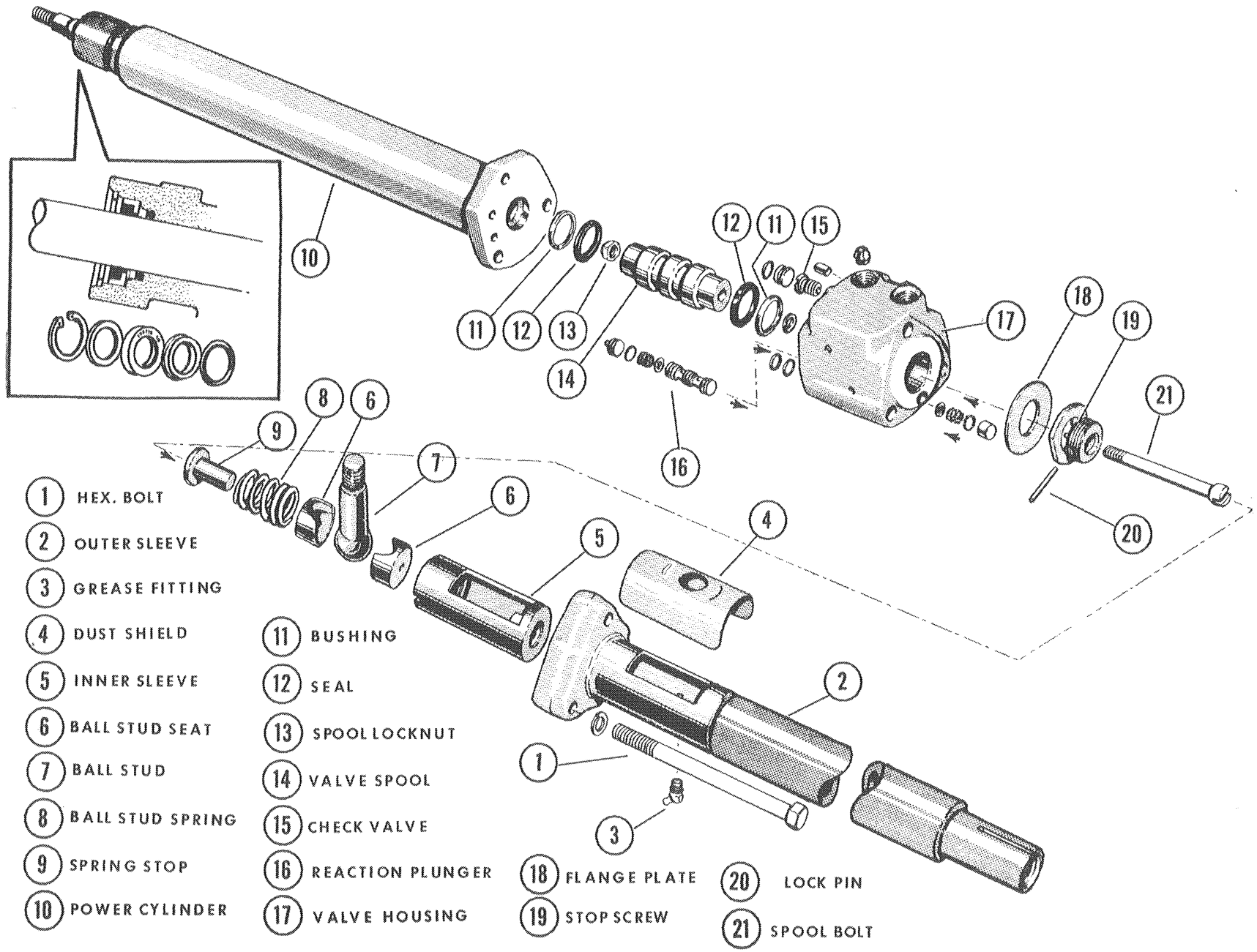
1 HEX. BOLT
2 OUTER SLEEVE
3 GREASE FITTING
4 DUST SHIELD
5 INNER SLEEVE
6 BALL STUD SEAT
7 BALL STUD
8 BALL STUD SPRING
9 SPRING STOP
10 POWER CYLINDER
11 BUSHING
12 SEAL
13 SPOOL LOCKNUT
14 VALVE SPOOL
15 CHECK VALVE
16 REACTION PLUNGER
17 VALVE HOUSING
18 FLANGE PLATE
19 STOP SCREW
20 LOCK PIN
21 SPOOL BOLT

Figure G-14

ADJUSTMENT AND INSTALLATION OF THE POWER STEERING CYLINDER
(Refer to Figure G-15)

Before the power steering cylinder is installed on the Loader, measurements must be taken to insure that the proper linkage adjustment can be made when the cylinder is installed.

A. Measure the distance from the piston rod end of the cylinder to the end of the ball stud with the piston rod fully retracted, MEASUREMENT A.

B. Measure the distance from the piston rod end of the cylinder to the end of the ball stud with the piston rod fully extended, MEASUREMENT B.

C. Subtract MEASUREMENT A from MEASUREMENT B. The remainder represents the FULL STROKE of the piston rod.

D. Install the cylinder on the Loader.

E. Lift the Loader off the ground evenly (using two jacks under the axle - one each side of the Loader) so the axle is parallel with the ground and the wheels are free. Back off the steering bracket steering stops as far as possible.

F. Turn the steering wheel full right so the right rear wheel stop is against the axle. Measure the distance as in Step 1.

G. Turn the steering wheel full left so the left rear wheel stop is against the axle. Measure the distance as in Step 2.

H. Subtract MEASUREMENT A from MEASUREMENT B. The remainder represents the ACTUAL STROKE of the piston rod with the cylinder installed on the Loader.

I. Subtract the ACTUAL STROKE from the FULL STROKE.

Example:

Full Stroke (Cylinder Not Installed)	11 Inches
Actual Stroke (Cylinder Installed On Loader)	10 Inches
	1 Inch

J. The remaining 1 Inch to provide piston clearance at maximum turns, must be taken up equally by the two ball studs on either end of the power steering cylinder.

Adjustment of The Steering Bracket and Rear Wheel Steering Stops
(Refer to Figures G-16 and G-17)

A. Loosen the locknuts and turn the steering bracket stop bolts in as far as possible.

B. Turn the steering wheel to the right until 1/8 inch is obtained between the rear stop bolt and the steering axle. Turn the steering bracket bolt out until it contacts the drop arm. Tighten the locknut.

C. Repeat Step 2 turning the steering wheel left.

IMPORTANT

After the steering stops are adjusted correctly, if one bolt is more than 1/4 inch longer than the other bolt, lengthen the steering control link if the front bolt is longer and shorten the link if the rear bolt is longer.

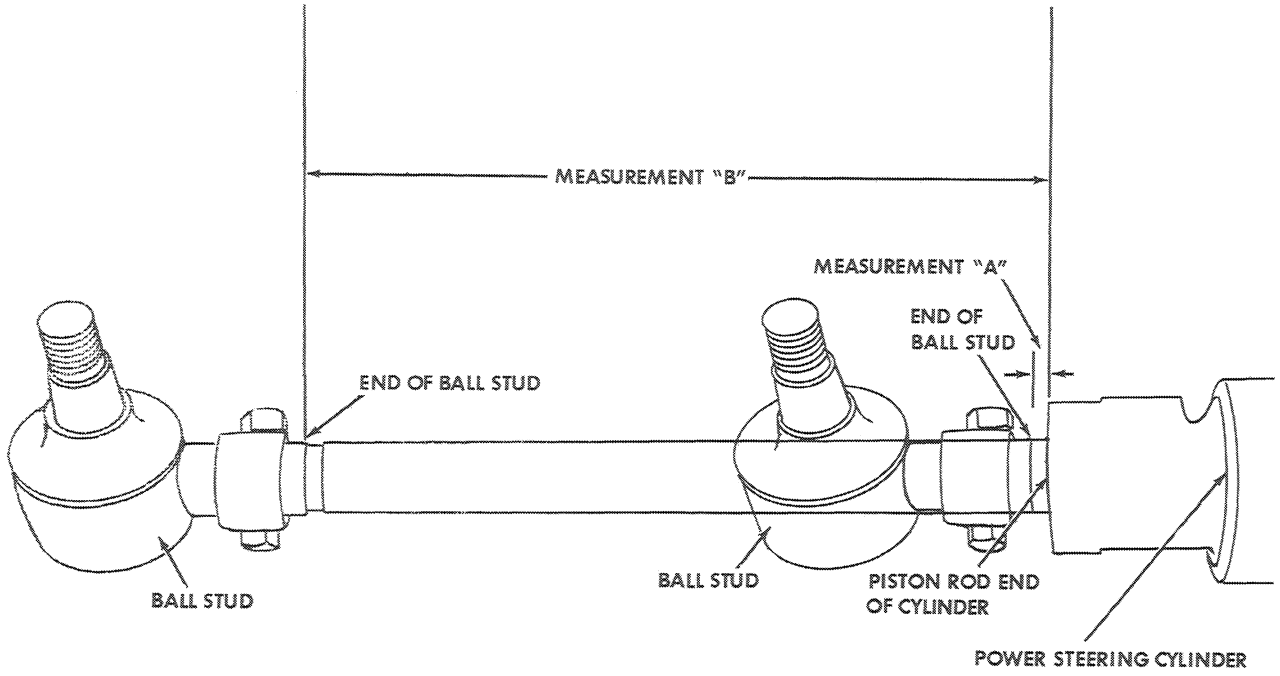

Figure G-15

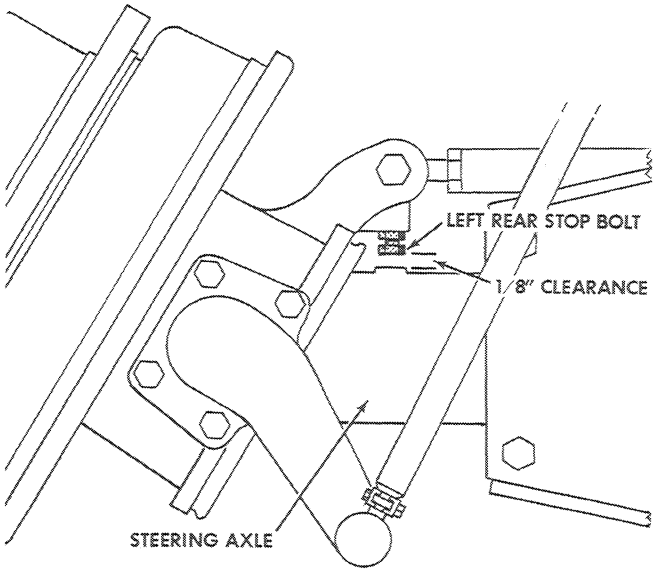

Figure G-16

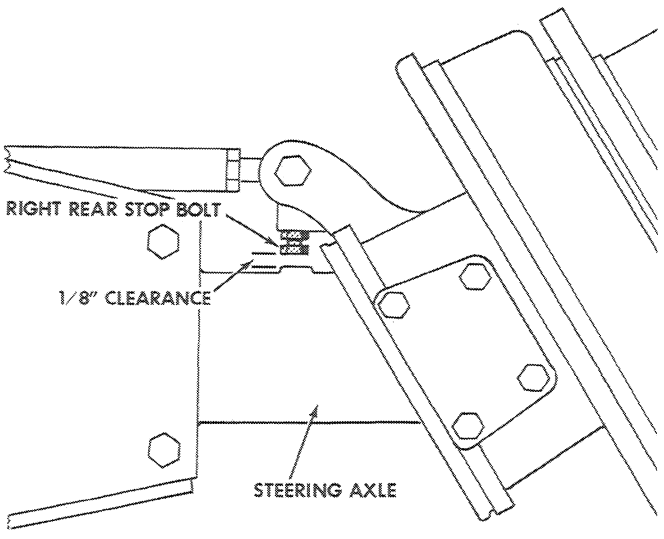

Figure G-17

REAR WHEEL TOE-IN OR TOE-OUT

(Refer to Figure G-18)

On Case Unit Loaders there must be no toe-in or toe-out of the rear wheels. A toe-in or toe-out condition causes the rear wheels to track improperly. Thus at high speeds a toe-in or toe-out condition allows the Loader to wander.

Measuring Toe-In or Toe-Out

A. Locate the Loader on a hard level surface preferably concrete. Place the rear wheels in a straight ahead position.

B. Make sure the rear tire pressures are equal.

C. Start at the front or leading edge of the rear wheels, place a chalk mark on each tire center line at a point 24 inches above the ground. Do the same at the rear or trailing edge of each tire. Measure the distance between the tire center lines at the chalk marks.

THE DISTANCE BETWEEN MEASUREMENT A AND MEASUREMENT B MUST BE THE SAME. BOTH MEASUREMENTS - FRONT AND REAR MUST BE TAKEN AT THE SAME HEIGHT ABOVE THE FLOOR.

If MEASUREMENT A and MEASUREMENT B are not the same, adjust the tie rod ends.

D. Remove the tie rod end.

TURN THE TIE ROD BALL STUD OFF THE TIE ROD TO CORRECT A TOE-IN CONDITION

TURN THE TIE ROD BALL STUD ON THE TIE ROD TO CORRECT A TOE-OUT CONDITION

IMPORTANT If more than 1/4 inch adjustment must be made, make the adjustment at both the tie rod ball studs and equally divide the adjustment between them.

ADJUSTING THE TURNING ANGLE WHEN THE STEERING AXLE UNIVERSAL OR REAR STEERING STOP IS INSTALLED

(Refer to Figure G-19)

The correct turning angle for Case Unit Loaders is 25° with the Loader on a level surface and 1/8 inch between the rear steering stop bolts and the axle.

When installing a rear steering stop bolt or a steering universal joint, there must be an angle of 28° with the rear stop contacting the axle to allow for oscillation of the rear axle when driving over rough or uneven ground.

To check this angle proceed as follows:

A. Lift the Loader rear wheels evenly off the ground so that the axle is parallel with the ground and the wheels are free. Back off the steering bracket stop bolts as far as possible.

B. Lay the A16593 Turning Angle Gauge against the backing plate of the right rear wheel.
NOTE : The A16593 Turning Angle Gauge can be purchased from the Central Parts Department, J. I. Case Company, Racine, Wisconsin.

C. Turn the steering wheel until the triangle is parallel with the Loader frame. Measure the distance between "A" and the distance between "B".

MEASUREMENT "A" AND MEASUREMENT "B" MUST BE THE SAME

D. At this point the right rear wheel steering stop bolt must be contacting the axle.

E. Repeat this procedure turning the steering wheel left.

F. Then adjust the steering bracket stop bolts as directed on Page G-24. The adjustment of the steering bracket stops is to obtain the 25° and 1/8 inch clearance between the rear steering stops and the axle.

IMPORTANT

The only time the angle is checked at 28° is if the rear steering stop bolt or a steering universal joint is replaced. The correct turning angle of all Case 4 Wheel Drive Unit Loaders is 25° with the Loader on a level surface and 1/8 inch clearance between the rear steering stop bolts and the axle.

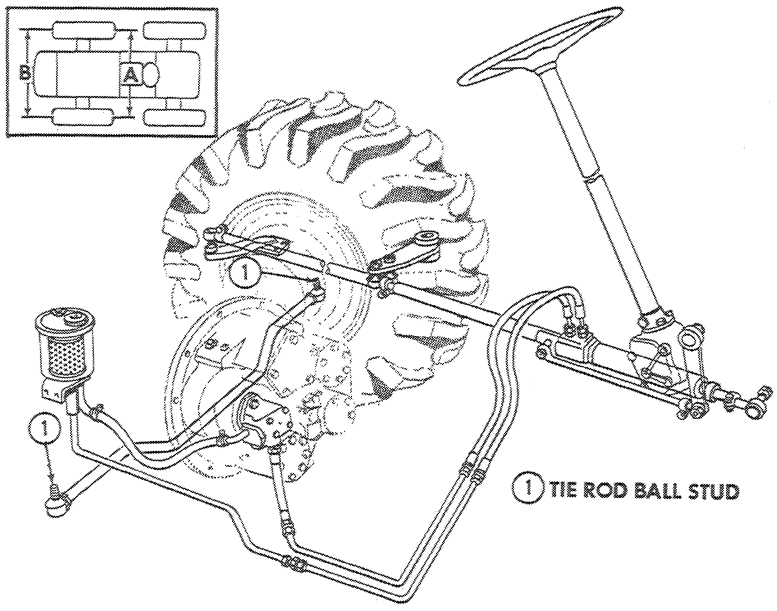

Figure G-18

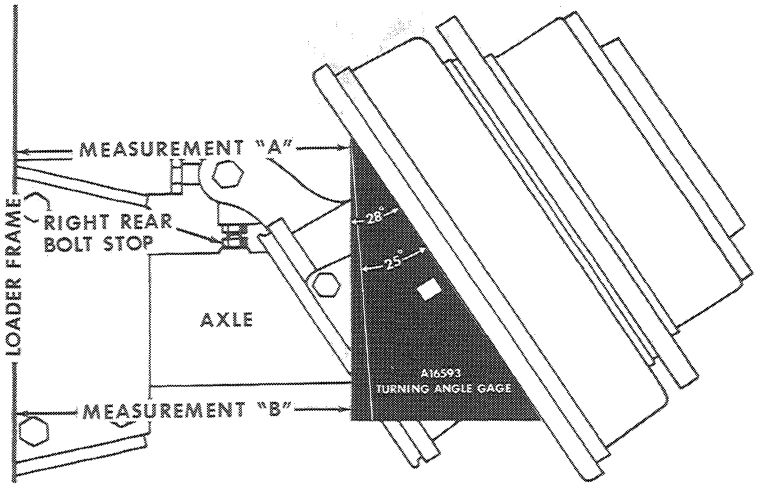

Figure G-19

TL SERIES STEERING GEAR BOX

Introduction

The steering gear is a cam and twin lever sliding stud type. Both studs of the twin lever engage the cam for normal straight ahead steering. As the steering wheel is turned either to the right or left, one of the studs is disengaged from the cam. The effective leverage of the single stud greatly increases as the turn becomes sharper. As the Loader operator turns the steering wheel, the gear ratio changes from one ratio to another to suit the requirements of steering stability at high speeds and easy wheel turn in tight operations.

How It Works

The steering gear consists of two main parts:

THE CAM --- THE LEVER SHAFT

The cam is an integral part of the steering shaft. The steering wheel is splined to the steering shaft - thus the steering wheel and cam operate as a single unit.

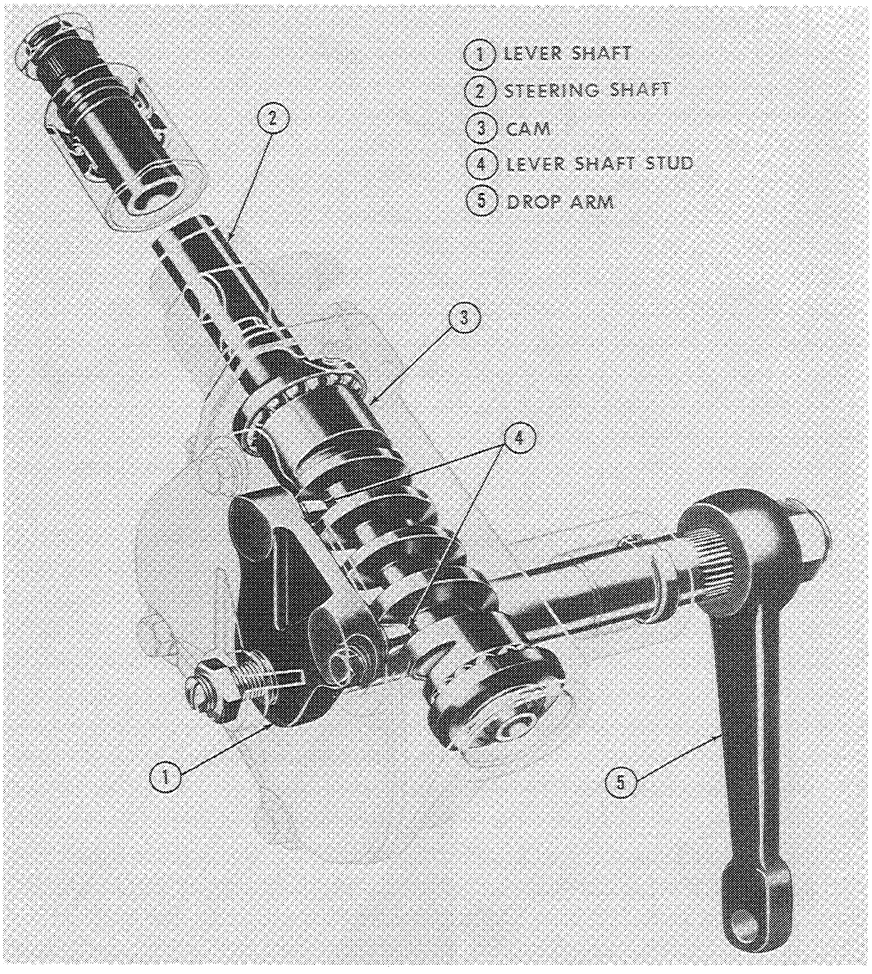

Figure G-20

The two lever shaft studs move along the groove in the cam as the steering wheel is turned. The lever shaft studs rotate the lever shaft and move the drop arm which is splined to the lever shaft. The drop arm is connected to the power steering control valve by the steering link. The amount of movement is determined by the amount of turning of the steering wheel.

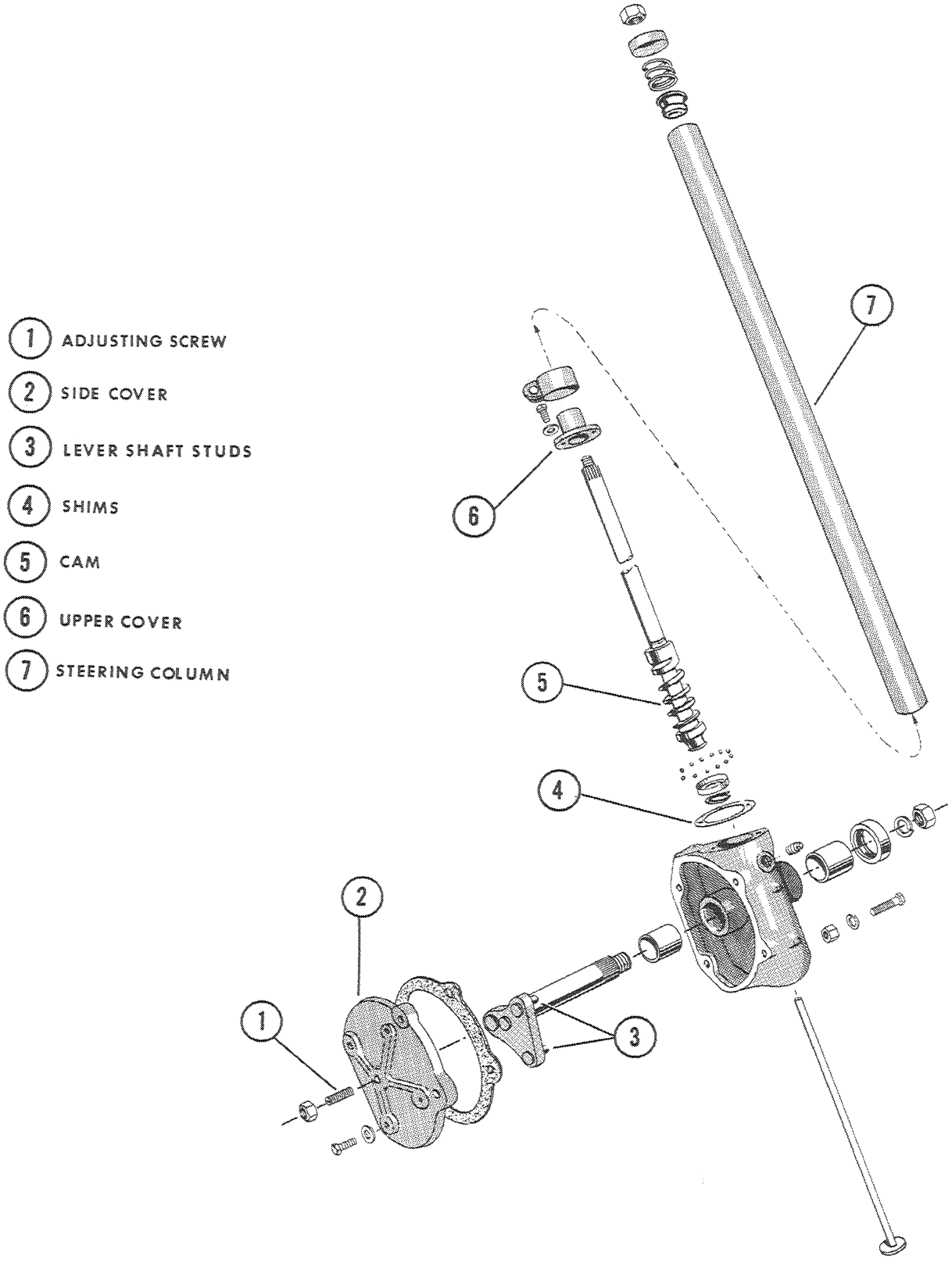
1 ADJUSTING SCREW
2 SIDE COVER
3 LEVER SHAFT STUDS
4 SHIMS
5 CAM
6 UPPER COVER
7 STEERING COLUMN

Figure G-21

STEERING GEAR ADJUSTMENTS

(Refer to Figure G-22)

Steering Column Alignment

Before making any adjustments of the steering gear, it is important that the steering column is aligned. To determine whether misalignment exists, remove the steering tube clamp. If the steering column moves to a different position other than the clamped position, it has been dented or bent. Replace the steering column.

Adjustment of Ball Thrust Bearings on Cam

When making adjustments, free the steering gear of all load by disconnecting the steering control link from the drop arm and loosen the steering tube clamp below the instrument panel.

A. Remove the three bolts and lift up the upper cover.
B. Clip and remove one or more shims as required.
NOTE Shims of .002", .003" and .010" are available.
C. Install the three bolts and tighten 15 to 18 foot pounds.
D. There should be a slight drag when turning the steering wheel with the thumb and forefinger.
E. If necessary, remove or replace shims until the correct adjustment is made.

Adjusting Backlash of the Lever Shaft Studs to Cam

(Refer to Figure G-22)

Periodically the backlash between the lever shaft studs and cam will have to be adjusted. The backlash adjustment must be made whenever there is excessive "play" at the steering wheel and at the drop arm. Excessive steering wheel "play" is especially noticeable in the straight ahead position.

A. Disconnect the steering control link from the drop arm and loosen the steering tube clamp below the instrument panel.

B. Tighten the side cover adjusting screw until there is a very slight drag through mid-position when turning the steering wheel slowly from extreme right to extreme left positions.

NOTE The groove in the cam is purposely cut shallower, therefore narrower, in the mid-position range of travel of each stud to provide close adjustment where usually the straight ahead driving action takes place. It also makes this close adjustment possible after normal wear occurs without causing a bind elsewhere.

C. Therefore, adjust through the mid-position. Do not adjust in position off mid-position - backlash at these points is normal and not objectionable.

D. Connect the steering control link to the drop arm and install the steering tube clamp below the instrument panel.

E. Turn the steering wheel to the extreme right and extreme left. If any binding or stiffness is evident, the steering column is probably binding.

LUBRICATION

The steering gear box level must be checked every 240 hours of operation. Fill steering gear housing slowly with SAE 90 General Purpose Gear Lubricant until it begins to run out of the plug opening in the gear housing.

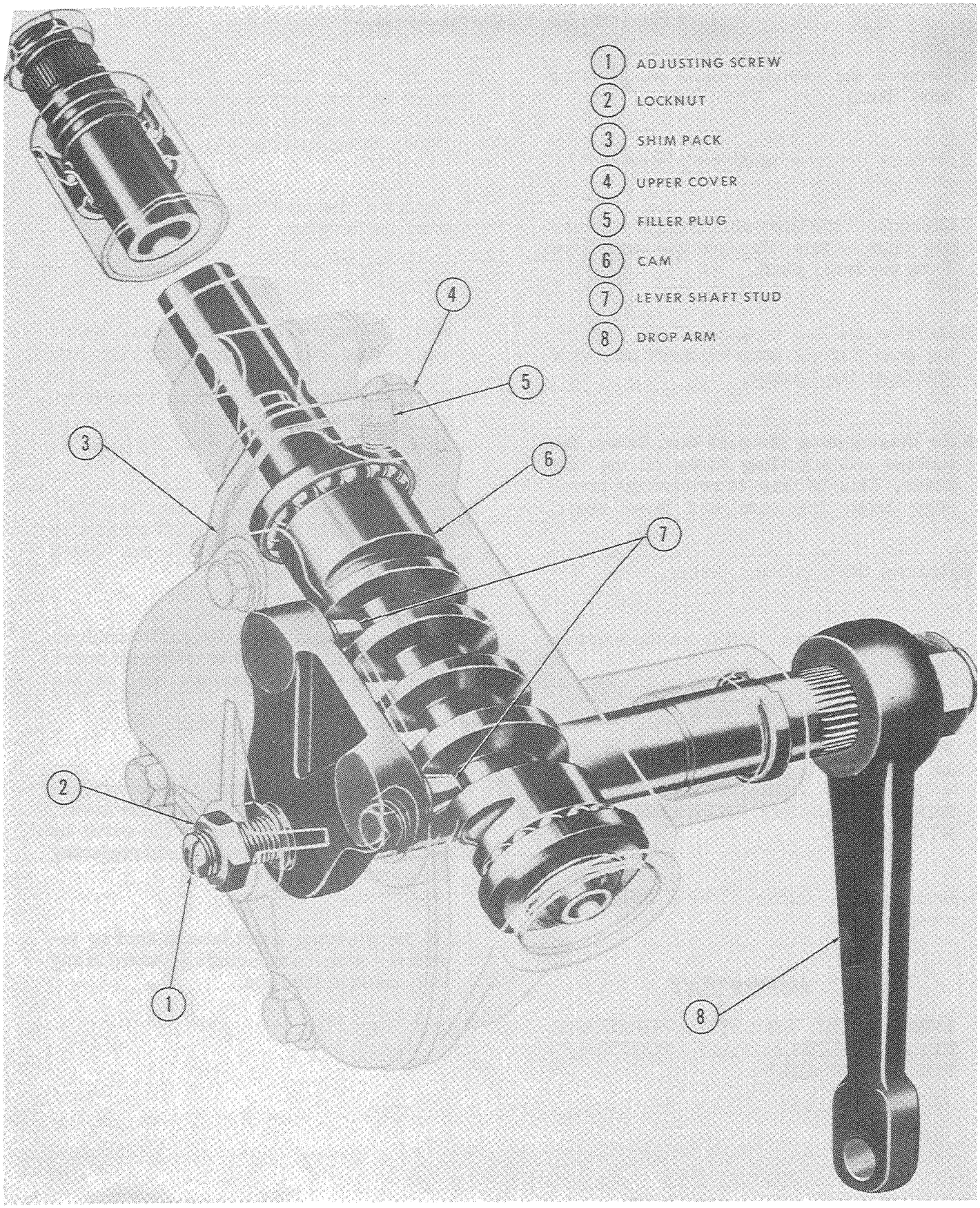
1 ADJUSTING SCREW
2 LOCKNUT
3 SHIM PACK
4 UPPER COVER
5 FILLER PLUG
6 CAM
7 LEVER SHAFT STUD
8 DROP ARM

Figure G-22

DISASSEMBLY OF THE STEERING GEAR BOX

(Refer to Figure G-23)

A. Remove the steering wheel and steering tube clamp.

B. Remove the front platform plates.

C. Disconnect the drop arm from the steering control link. Remove the drop arm from the lever shaft.

D. Remove the two mounting bolts and lift the gear box and steering shaft tube as a unit from the Loader.

E. To disassemble the gear box, loosen the locknut and adjusting screw on the side cover. This is done to relieve the pressure from the cam and lever shaft.

F. Remove the cover and gasket.

G. Remove the lever shaft from the housing.

CAUTION

MAKE SURE THE SPLINED END OF THE LEVER SHAFT IS FREE OF ANY BURRS WHICH MAY DAMAGE THE HOUSING BUSHINGS AS THE LEVER SHAFT IS WITHDRAWN.

H. Remove the upper housing cover and steering tube.

IMPORTANT

REMOVE THE ADJUSTING SHIMS AND KEEP THE SHIM PACK TOGETHER FOR REASSEMBLY.

I. If the upper bearing indicates wear or there is side play in the steering wheel, pull the bearing with OTC No. 954-2 Puller or equivalent.

J. Remove the cam and shaft assembly from the housing.

CAUTION

WHEN REMOVING THE CAM AND SHAFT ASSEMBLY, DO NOT REMOVE THE CUP RETAINER AT EITHER END OF THE CAM. IF THE RETAINERS ARE REMOVED IT WILL LOOSEN THE BALL CUPS AND THE BALL BEARINGS WILL FALL OUT.

K. Whenever the gear box is disassembled, always replace the lever shaft oil seal by pulling the seal with OTC No. 954-2 Puller or equivalent.

L. If inspection of the lever shaft bushings in the gear housing show wear or score marks, press the bushings out of the housing.

M. If the lower end cover is leaking, use Permatex around the edges of the cover. If the leak persists, remove the cover by tapping it out of the housing and replacing the cover with a new one.

N. If the steering shaft tube is bent or interferes with the steering alignment in any way, replace the tube.

1. LOCKNUT
2. SIDE COVER ADJUSTING SCREW
3. SIDE COVER
4. GASKET
5. LEVER SHAFT
6. UPPER HOUSING COVER
7. STEERING TUBE
8. SHIM PACK
9. UPPER BEARING
10. CAM AND SHAFT ASSEMBLY
11. CUP RETAINER
12. BALL CUP
13. BALL BEARINGS
14. LEVER SHAFT OIL SEAL
15. LEVER SHAFT BUSHINGS
16. LOWER END COVER
17. STEERING GEAR HOUSING

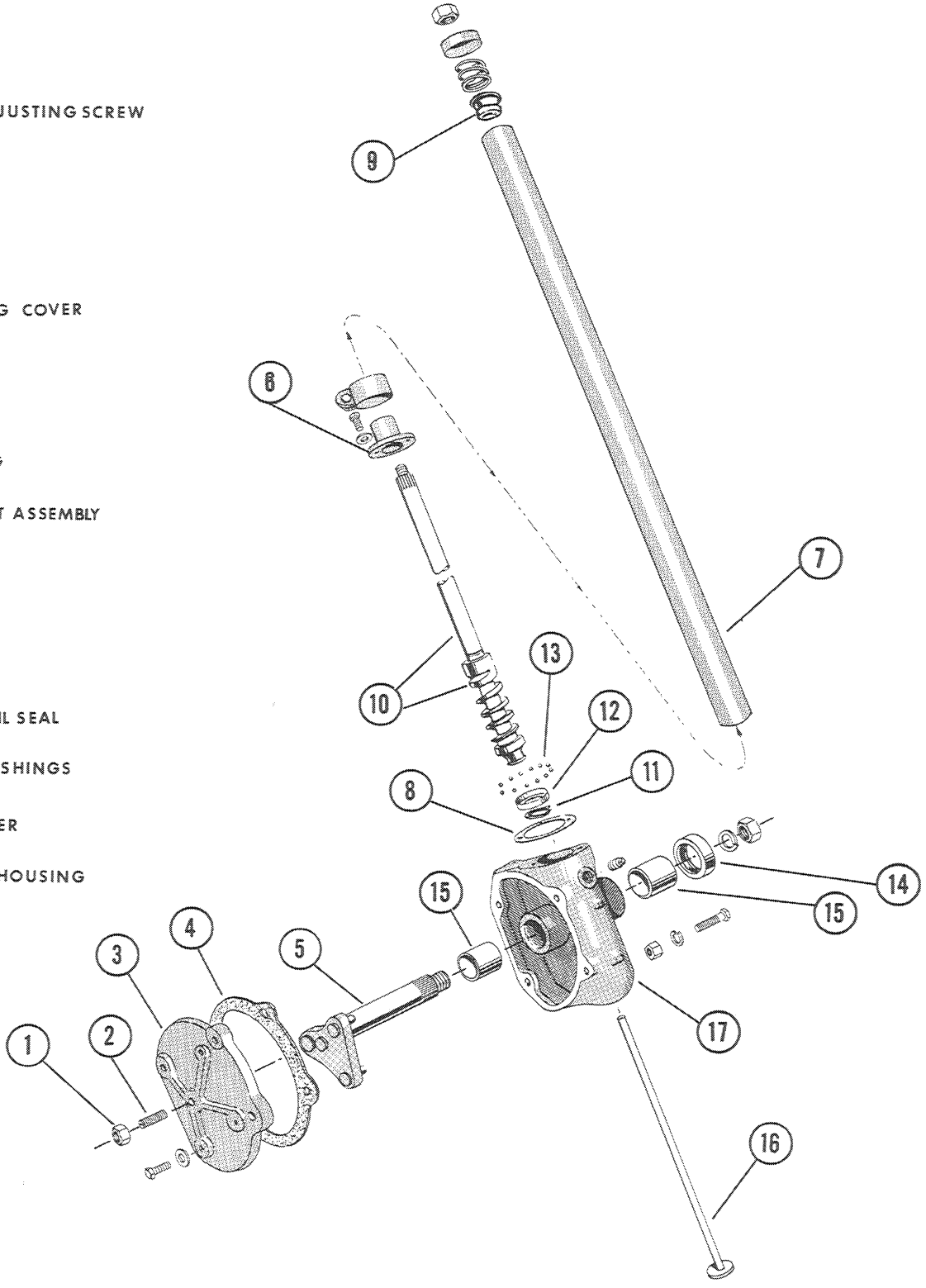

Figure G-23

INSPECTION

(Refer to Figure G-24)

With the steering gear box disassembled, the component parts can easily be cleaned and inspected for wear, cracks, score marks and burrs. All parts that are worn or damaged must be replaced.

Gear Housing

Inspect the housing for cracks and burrs on the cover face. The housing bore, where the bushings are located, must also be inspected for deep scratches or grooves. If the lower end cover of the housing is leaking, use Permatex around the edges of the cover. If the leak still persists, replace the cover with a new one.

Lever Shaft Bushings

Inspect the lever shaft bushings for score marks and that the lever shaft is a good fit in the bushings. The oil seal must be replaced. If the oil seal is not replaced, there is possibility of the seal leaking.

Lever Shaft

Inspect the lever shaft at all bearing points for wear, twisted splines, wear from a loose drop arm and for stripped threads.

Lever Shaft Studs

Inspect the lever shaft studs for flat spots or a chipped condition. If very small flat spots are noticed, they may be disregarded providing a satisfactory adjustment can be made.

Cam and Shaft

Inspect the cam and shaft for dents, chipped or scored surfaces especially on the cam.

Ball Bearing Cups

Inspect the ball bearing cups for deep wear, pits or dents. Inspect the ball bearings for scratches, dents or flat spots.

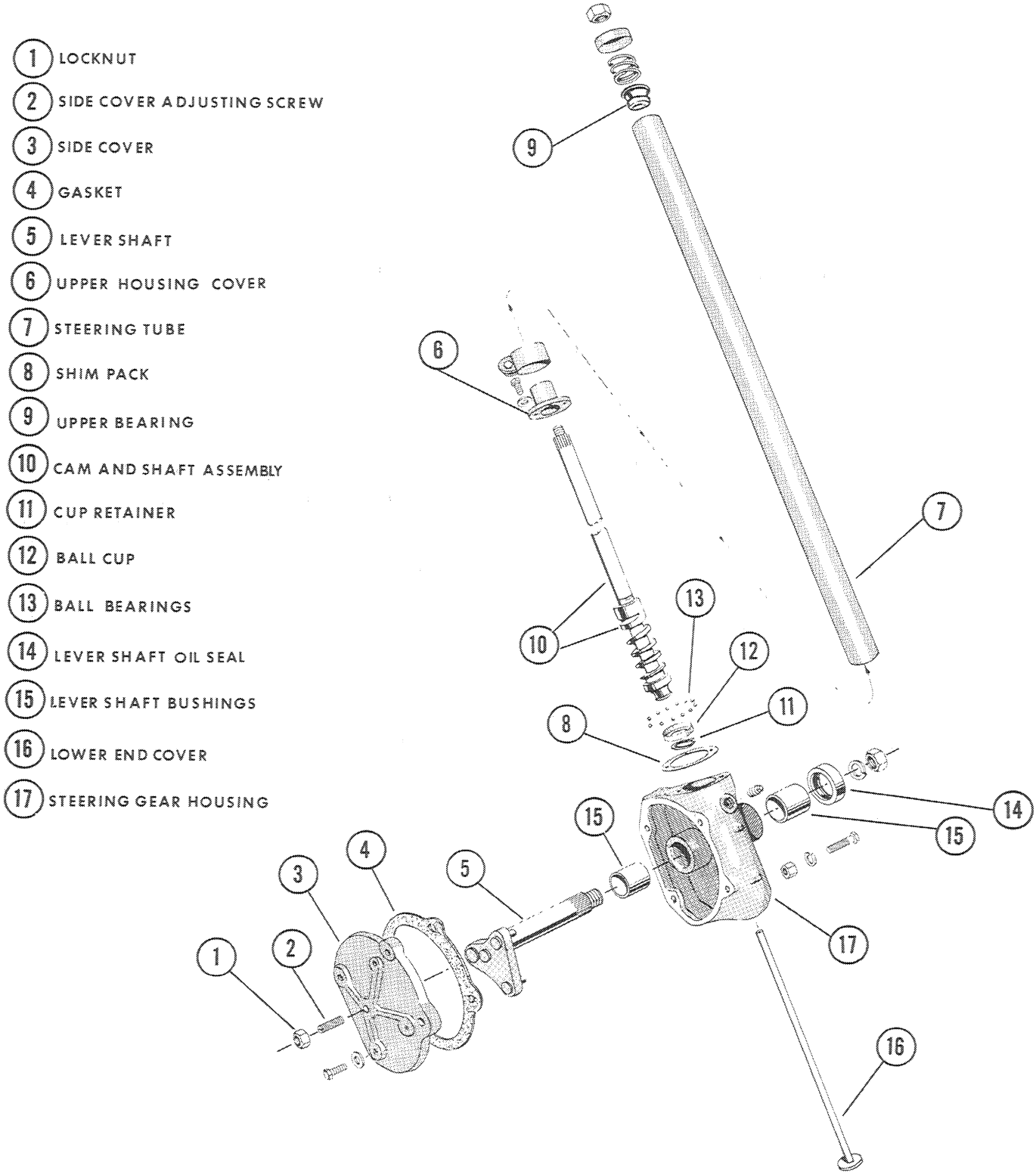
1 LOCKNUT
2 SIDE COVER ADJUSTING SCREW
3 SIDE COVER
4 GASKET
5 LEVER SHAFT
6 UPPER HOUSING COVER
7 STEERING TUBE
8 SHIM PACK
9 UPPER BEARING
10 CAM AND SHAFT ASSEMBLY
11 CUP RETAINER
12 BALL CUP
13 BALL BEARINGS
14 LEVER SHAFT OIL SEAL
15 LEVER SHAFT BUSHINGS
16 LOWER END COVER
17 STEERING GEAR HOUSING

Figure G-24

ASSEMBLY OF THE STEERING GEAR BOX

(Refer to Figure G-25)

A. If the lower end cover has been removed, coat the edges of a new end cover with Permatex and install it into the bottom of the housing until it bottoms.

B. If the lever shaft bushings have been removed, press in the new bushings and oil seal. Refer to inset, Figure G-25.

IMPORTANT

WHEN PRESSING IN THE BUSHINGS, MAKE SURE THE LUBRICATING HOLE IS LEFT OPEN IN THE HOUSING BORE.

C. If the ball bearings and bearing cups have been removed, coat the bearing cup with vaseline and lay the ball bearings in the bearing cup.

D. Install the bearing cup on the end of the cam and install the cup retainer.

E. Repeat Step 3 above and install the bearing cup at the other end of the cam and install the cup retainer.

F. Press in the upper bearing if it has been removed from the steering shaft tube. Refer to inset, Figure G-25.

G. Install the cam and shaft assembly into the gear housing.

H. Install the shim pack over the shaft and install the upper housing cover. Tighten the 3 bolts 15 to 18 foot pounds.

I. Install the lever shaft in the housing.

J. Install the side cover on the housing. Refer to Page G-30 for adjusting ball thrust bearings and backlash of the studs in the housing.

K. Install the gear box in the Loader and tighten the bolts to 155 foot pounds.

L. Install the drop arm on the end of the lever shaft making sure the marks on the shaft line up with the mark on the drop arm.

IMPORTANT

THE MARKS ON THE LEVER SHAFT MUST LINE UP WITH THE MARK ON THE DROP ARM. IF THE MARKS DO NOT LINE UP, THE STEERING ANGLE OR THE STROKE OF THE PISTON ROD WILL NOT BE CORRECT - AN UNEQUAL TURNING ANGLE CAN ALSO RESULT.

M. Install the steering tube clamp and front platform plates.

N. Install the steering wheel.

1. LOCKNUT
2. SIDE COVER ADJUSTING SCREW
3. SIDE COVER
4. GASKET
5. LEVER SHAFT
6. UPPER HOUSING COVER
7. STEERING TUBE
8. SHIM PACK
9. UPPER BEARING
10. CAM AND SHAFT ASSEMBLY
11. CUP RETAINER
12. BALL CUP
13. BALL BEARINGS
14. LEVER SHAFT OIL SEAL
15. LEVER SHAFT BUSHINGS
16. LOWER END COVER
17. STEERING GEAR HOUSING

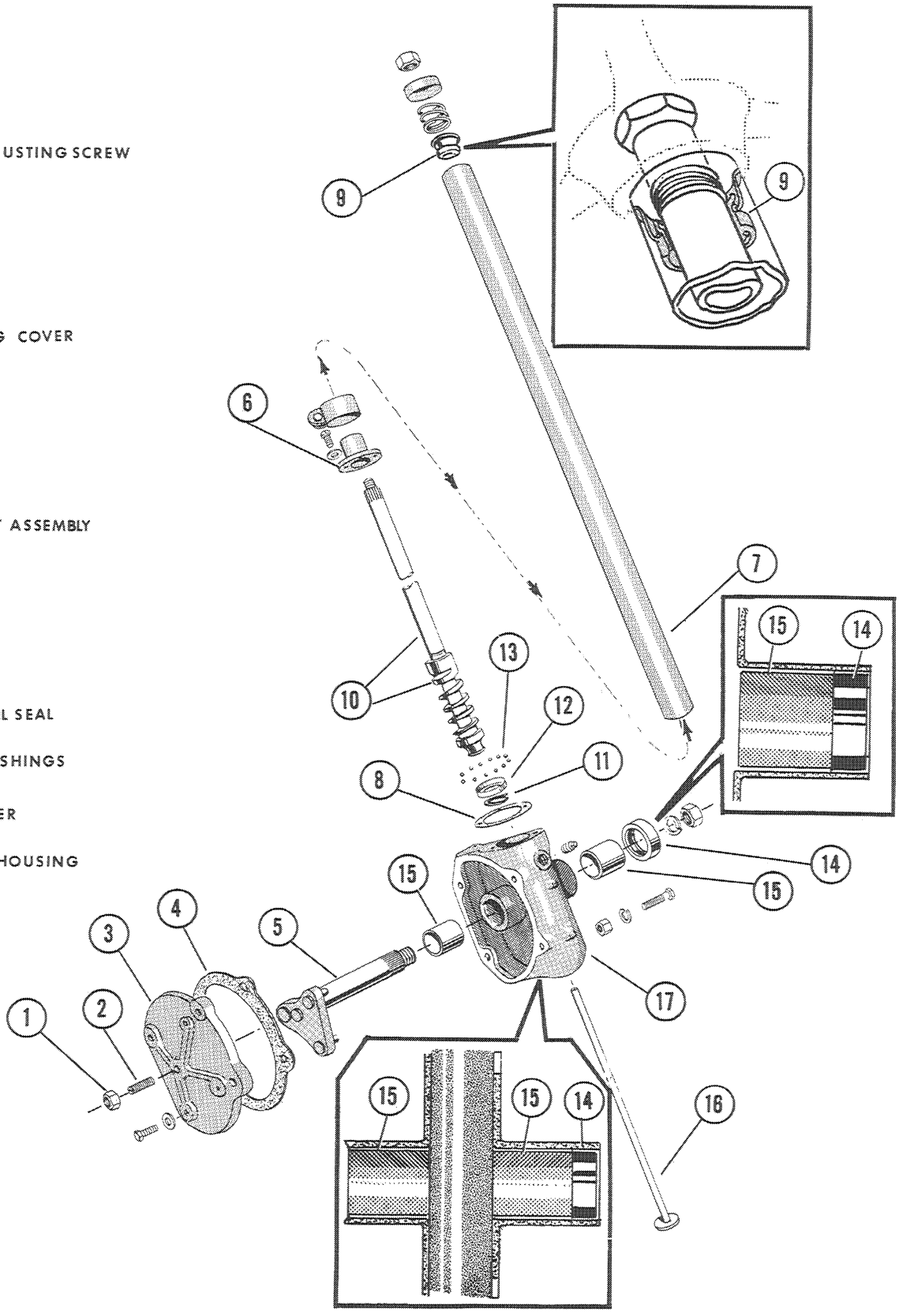

Figure G-25

BLEEDING THE POWER STEERING SYSTEM

Remove the reservoir filler cap and carefully fill the reservoir with clean Automatic Transmission Fluid Type A until the oil level reaches the full "F" mark on the filler cap dipstick, Figure G-26.

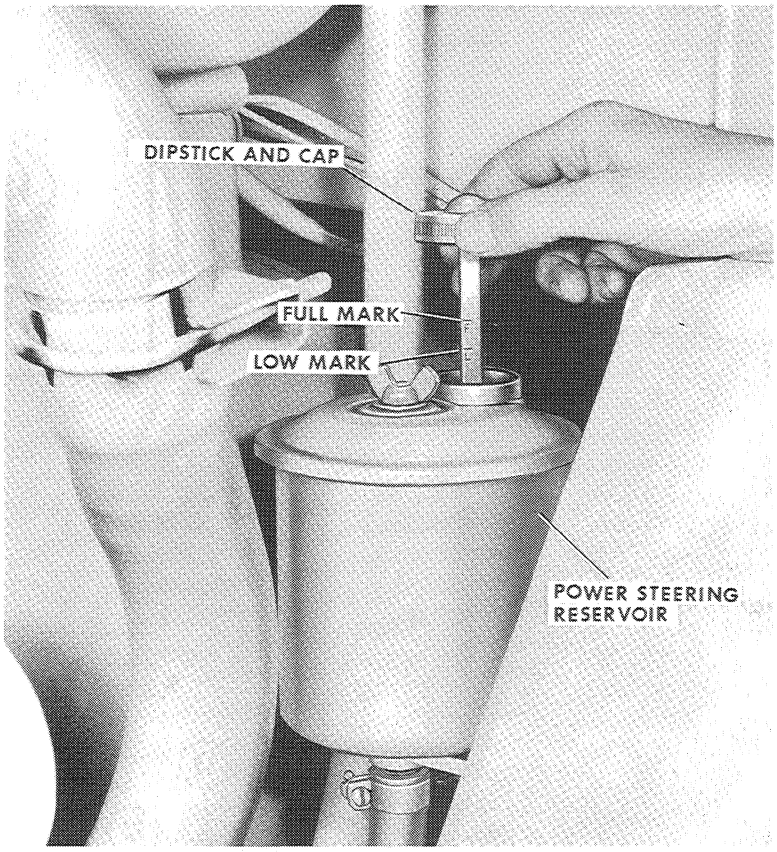

Figure G-26

Replace the reservoir filler cap and start the engine. Turn the steering wheel through several turns. Then stop the engine and refill the reservoir until the oil level reaches the full "F" mark on the filler cap dipstick, Figure G-26. Overfilling the reservoir will cause the oil to surge out of the breather hole in the cap.

Do this until the fluid level ceases to drop after turning the steering wheel. The system is then completely filled and bled of air.

NOTE

The first few times you turn the steering wheel, do not make full turns. Make full turns only after a sufficient amount of fluid is added to the system. When making a full turn, do not hold the wheels against the stops. This can result in damaging the pump relief valve from excessive pressure and overheating in the pump.

IMPORTANT

While bleeding air from the system, operate engine at low idle (approximately 750 RPM).

SERVICE SUGGESTIONS

Hard Steering

CAUSE	REMEDY
1. Low fluid level in reservoir.	1. Fill reservoir to correct level. Refer to Operator's Manual.
2. Wrong fluid being used - fluid bubbles out of reservoir.	2. Drain system and fill with correct fluid. Refer to Operator's Manual.
3. Hydraulic line connections leaking.	3. Tighten hydraulic lines.
4. Under inflated tires.	4. Check tire pressure.
5. Relief valve in power steering pump stuck in open position.	5. Refer to Section PP.
6. Lack of lubrication in steering gear box.	6. Add lubricant to proper level. Refer to Operator's Manual.
7. Cam gear ball bearings too tight.	7. Adjust end play of cam. Refer to Page G-30.
8. Studs adjusted too tight in cam grooves.	8. Adjust backlash of tapered studs in cam groove. Refer to Page G-30.
9. Cam ball bearings broken, rough or chipped.	9. Replace ball bearing cups and balls. Refer to Page G-36.
10. Steering shaft tube distorted or sprung.	10. Replace steering shaft tube. Refer to Page G-30.

Steering Shimmy

CAUSE	REMEDY
1. Worn or loose parts in steering linkage.	1. Replace worn parts and tighten linkage.

Power Cylinder Leaks

CAUSE	REMEDY
1. Scored piston rod.	1. Replace cylinder.
2. Worn or damaged seals.	2. Install new cylinder seal kit. Refer to Page G-23.

Poor Centering

CAUSE	REMEDY
1. Improper valve spool nut adjustment.	1. Torque nut 75 inch pounds and then back off 1/6 turn.
2. Valve spool sticking.	2. Replace valve body and spool assembly.

No Power Assistance With Engine Running

CAUSE	REMEDY
1. Reservoir empty.	1. Fill reservoir to correct level. Refer to Operator's Manual.
2. Hydraulic line broken.	2. Replace hydraulic line.
3. Pwer steering pump inoperative.	3. Replace pump. Refer to Section PP.

Lost Steering Motion

CAUSE	REMEDY
1. Cam worn, chipped or distorted.	1. Replace cam and shaft.
2. Excessive backlash of studs in cam groove.	2. Adjust backlash. Refer to Page G-30.
3. Excessive end play of cam.	3. Adjust ball bearings at ends of cam. Refer to Page G-30.
4. Lever shaft bushings badly worn.	4. Replace bushings.

External Oil Leakage

CAUSE	REMEDY
1. Oil leakage at steering gear housing cover.	1. Replace cover gasket.
2. Oil leakage at lower end cover of housing.	2. Replace with new cover.
3. Oil leakage at piston rod seals of steering cylinder.	3. Install new cylinder seal kit.

SECTION
PP

SERVICING THE
VTM VANE TYPE
POWER STEERING PUMP
ON
CASE 4 WHEEL DRIVE
UNIT LOADERS

Rac. Form 9-74561

PRINTED IN U.S.A.

TABLE OF CONTENTS

BLEEDING THE POWER STEERING SYSTEM PP-3

INTRODUCTION PP-4

PUMP OPERATION PP-4

OIL FLOW. . . . . PP-4 thru PP-7

Pump Operating at Low (Idle)Pump Speed. PP-4

Pump Operating at High (Idle)Pump Speed PP-6

Pump Relief Valve PP-6

POWER STEERING PUMP RELIEF VALVE PRESSURE CHECK PP-8

RESERVOIR AND FILTER ELEMENT PP-10

REMOVAL OF THE POWER STEERING PUMP PP-12

DISASSEMBLY OF THE POWER STEERING PUMP PP-12

INSPECTION OF THE POWER STEERING PUMP PP-12

ASSEMBLY OF THE POWER STEERING PUMP PP-14

INSTALLATION OF THE POWER STEERING PUMP PP-14

SERVICE SUGGESTIONS PP-16

BLEEDING THE POWER STEERING SYSTEM

Remove the reservoir filler cap and carefully fill the reservoir with clean Automatic Transmission Fluid - Type A until the oil level reaches the full "F" mark on the filler cap dipstick, Figure PP-1.

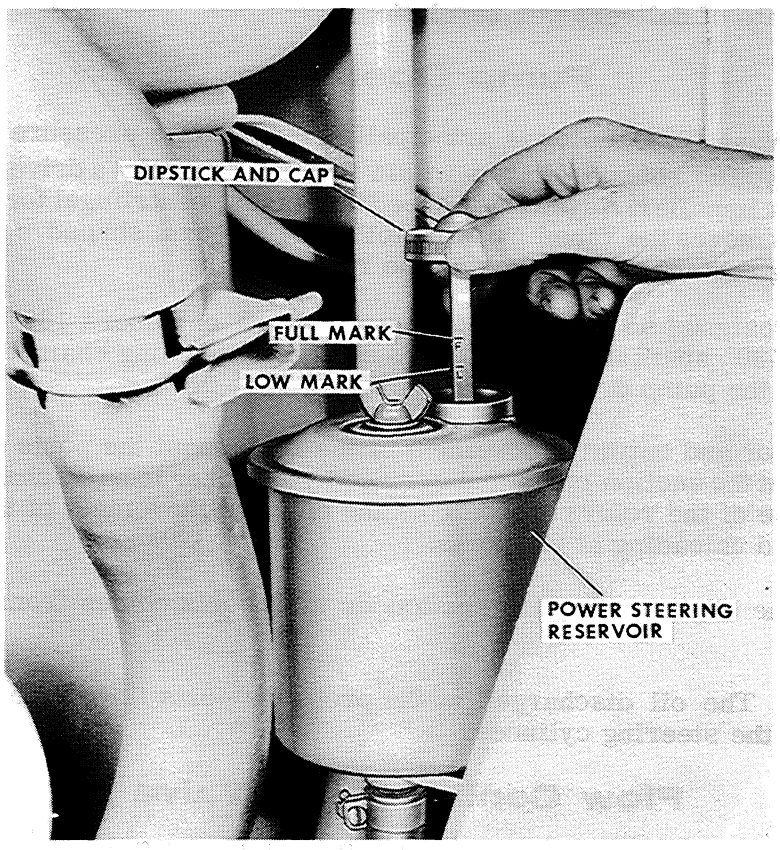

Figure PP-1

Replace the reservoir filler cap and start the engine. Turn the wheels through several turns. Then stop the engine and refill the reservoir until the oil level reaches the full "F" mark on the filler cap dipstick, Figure PP-1. Overfilling the reservoir will cause the oil to surge out of the breather hole in the cap.

Repeat this procedure until the fluid level ceases to drop after turning the steering wheel. The system is then completely filled and bled of air.

NOTE

The first few times you turn the steering wheel, do not make full turns. Make full turns only after a sufficient amount of fluid is added to the system. When making a full turn, do not hold the wheels against the stops. This can result in damaging the pump relief valve from excessive pressure and overheating in the pump.

IMPORTANT

While bleeding air from the system, operate engine at low idle (approximately 750 RPM).

INTRODUCTION

The VTM Series Vane Type Power Steering Pump used on Case Unit Loaders are mounted on the Torque Converter Housing and driven by the converter impeller, thus the pump operates continuously whenever the engine is running. The VTM pump is of the balanced vane type and has a constant rate of delivery per revolution.

Pump Operation

The VTM Series Vane Type Pump is principally made up of a pressure plate, rotor ring, rotor, vanes and body. The rotor is driven within the rotor ring by a drive shaft coupled thru gears to the converter impeller. As the rotor speed increases, centrifugal force plus pump pressure behind the vanes moves the vanes outward following the cam shaped contour of the rotor ring assuring sealing contact of the vanes on the rotor ring.

The rotor ring is designed so that two opposing pressure chambers 180° apart and two suction chambers also 180° apart are formed. This design of opposing chambers prevents uneven hydraulic loading on the pump drive shaft bushing.

Rotation of the rotor and outward movement of the vanes past the ports allows a full charge of oil to be drawn in at the suction ports and carried by the vanes to be discharged at the pressure ports. The cam shape of the rotor ring controls the outward movement of the vanes and determines the loading and unloading at the ports.

Suction Ports - The oil drawn in at the suction or inlet ports comes from the power steering reservoir.

Pressure Ports - The oil discharged at the pressure ports flows to both sides of the flow control valve and to the steering cylinder.

Flow Control Relief Valve

The VTM Power Steering Pump is equipped with an integral flow control and relief valve. The flow control regulates the volume of oil delivered to the system, dumping excess oil back into the inlet. The relief valve regulates the maximum pressure in the steering system.

OIL FLOW

Pump Operating at Low (Idle) Pump Speed

1. Figure PP-3, illustrates the oil flow at low (idle) pump speed. The fluid is drawn in by the rotor vanes at the suction port and delivered to the pressure port. From the pressure port the fluid is then directed to the following:

   a. Port to Power Steering Cylinder - the port that directs the fluid to the steering cylinder has an orifice that limits the maximum flow to the steering cylinder. At Low pump speed total pump delivery can be passed through the orifice.

   b. Port to Relief Valve Side of Flow Control Spool - this port branches off from the steering cylinder port, Figure PP-3. At low pump speed the only pressure in this port is from the normal line restrictions to the steering cylinder - This pressure plus a light spring hold the flow control spool closed causing entire pump delivery to flow to and thru the steering control valve and back to the reservoir.

   c. Port to Rear Side of Flow Control Spool - this port directs fluid to the rear side of the flow control spool. At low pump speed, pump delivery is not great enough to overcome the light spring and line pressure on the opposite end of the spool thus the spool remains closed.

Pump Operation

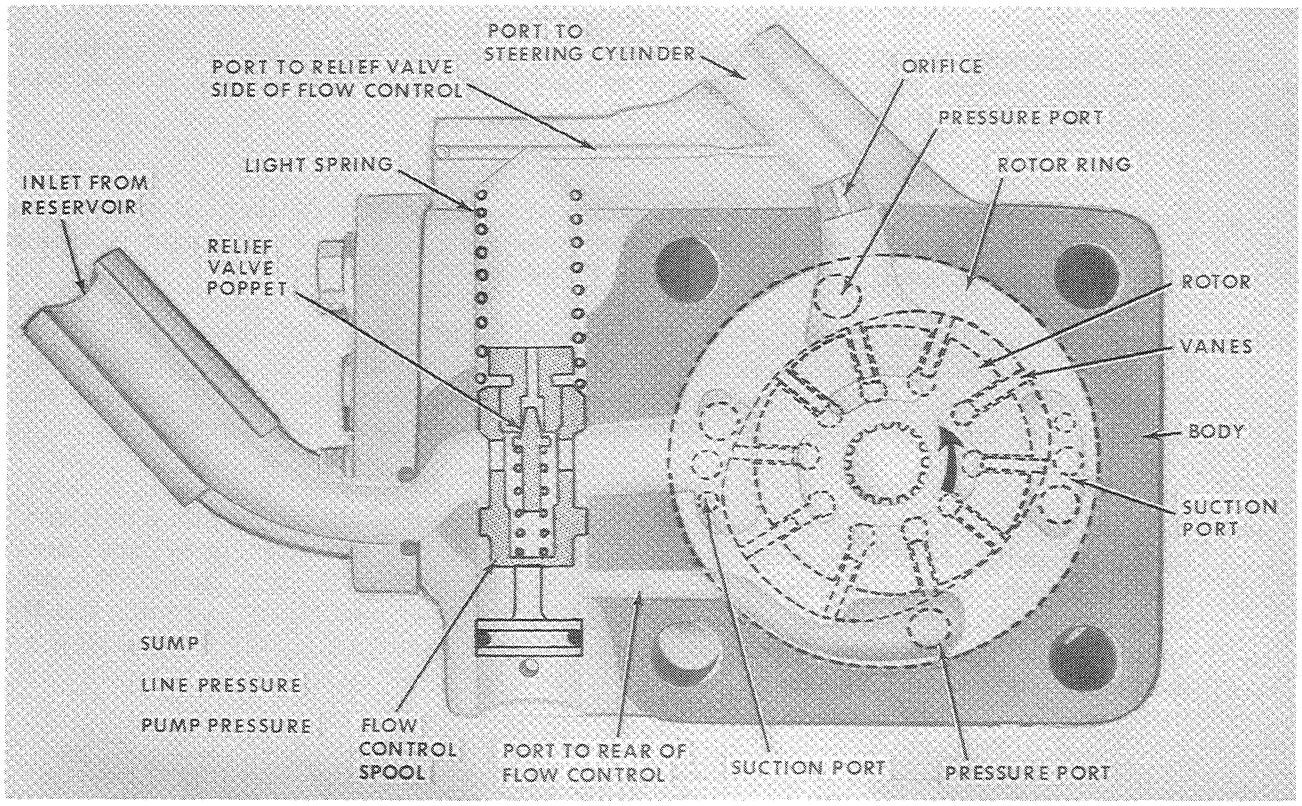

Figure PP-2

Pump Operating at Low (Idle) Pump Speed

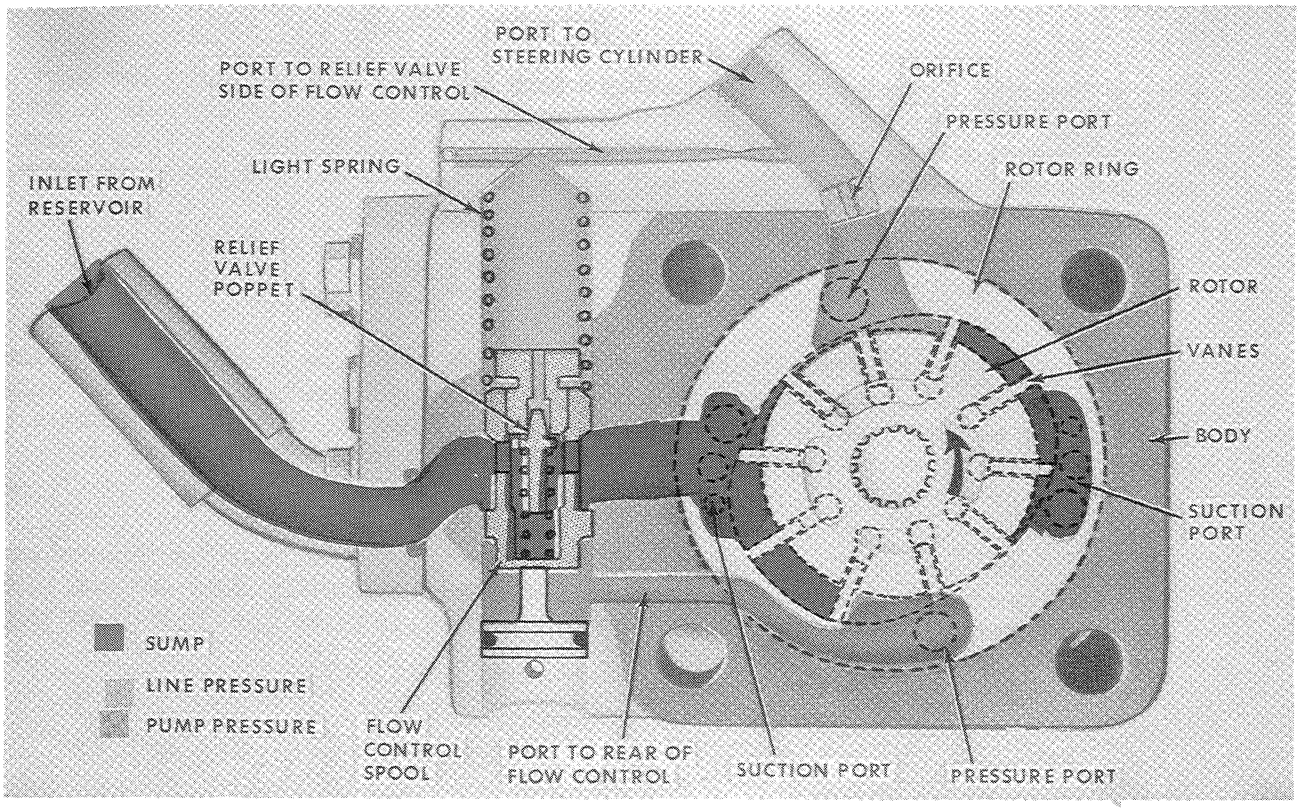

Figure PP-3

Pump Operating at High (Idle) Pump Speed

2. Figure PP-4, illustrates the oil flow at high (idle) pump speed. The fluid is drawn in by the rotor vanes at the suction port and delivered to the pressure port. From the pressure port the fluid is then directed to the following:

a. Port to Steering Cylinder - at high pump speed the pump delivery is greater than the flow rate determined by the orifice plug, and results in a slight pressure build up in the pressure chamber within the pump.

b. Port to Relief Valve Side of Flow Control Spool - at high pump speed there is about the same line resistance (when the wheels are straight ahead) as at low speed due to the orifice control at the steering cylinder port - therefore the pressure at the relief valve side of the Flow Control Spool is about the same as at low speed.

c. Port to Rear Side of Flow Control Valve - at high pump speed the pump delivery is greater than the volume the orifice plug will allow to flow to the steering cylinder, the result is a pressure build up in the port at the rear of the flow control spool. The pressure continues to build up in the port until it is great enough to overcome the light spring and line pressure, forcing the spool to open allowing excess fluid to flow past the spool to the suction port.

Pump Relief Valve

3. Figure PP-5, illustrates the oil flow when the line pressure exceeds the relief valve setting such as, locking the steering tires in a deep rut when making a turn with the tires mired in deep ruts.

a. Port to Steering Cylinder - when making a turn the fluid is directed by the port to the steering cylinder piston. If the wheels should become mired in deep ruts the pump will continue to deliver fluid to the cylinder piston but cannot move it. Thus a pressure build up will develop in the system back to the pump flow control spool and relief valve.

b. Port to Relief Side of Flow Control Spool - as the pressure develops due to the resistance at the wheels and steering cylinder the line pressure will increase until it unseats the relief poppet in the flow control spool. When the relief valve unseats - the pressure on the relief valve side of the spool will be momentarily reduced.

c. Port at Rear Side of Flow Control Spool - the instant the pressure is reduced at the relief valve end of the spool the pressure at the rear side of the flow control, moves the spool rearward dumping the excess oil back into the inlet side of the pump.

Pump Operating at High (Idle) Pump Speed

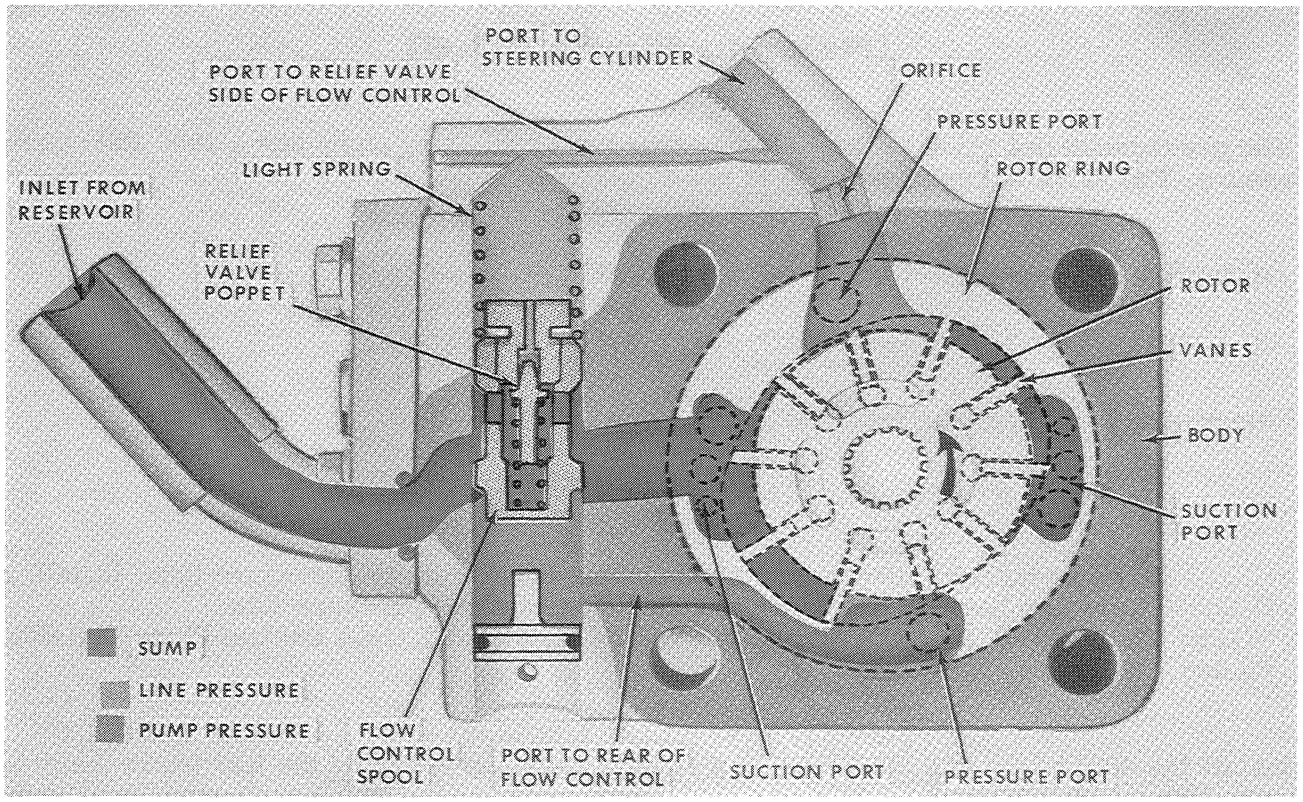

Figure PP-4

Pump Relief Valve

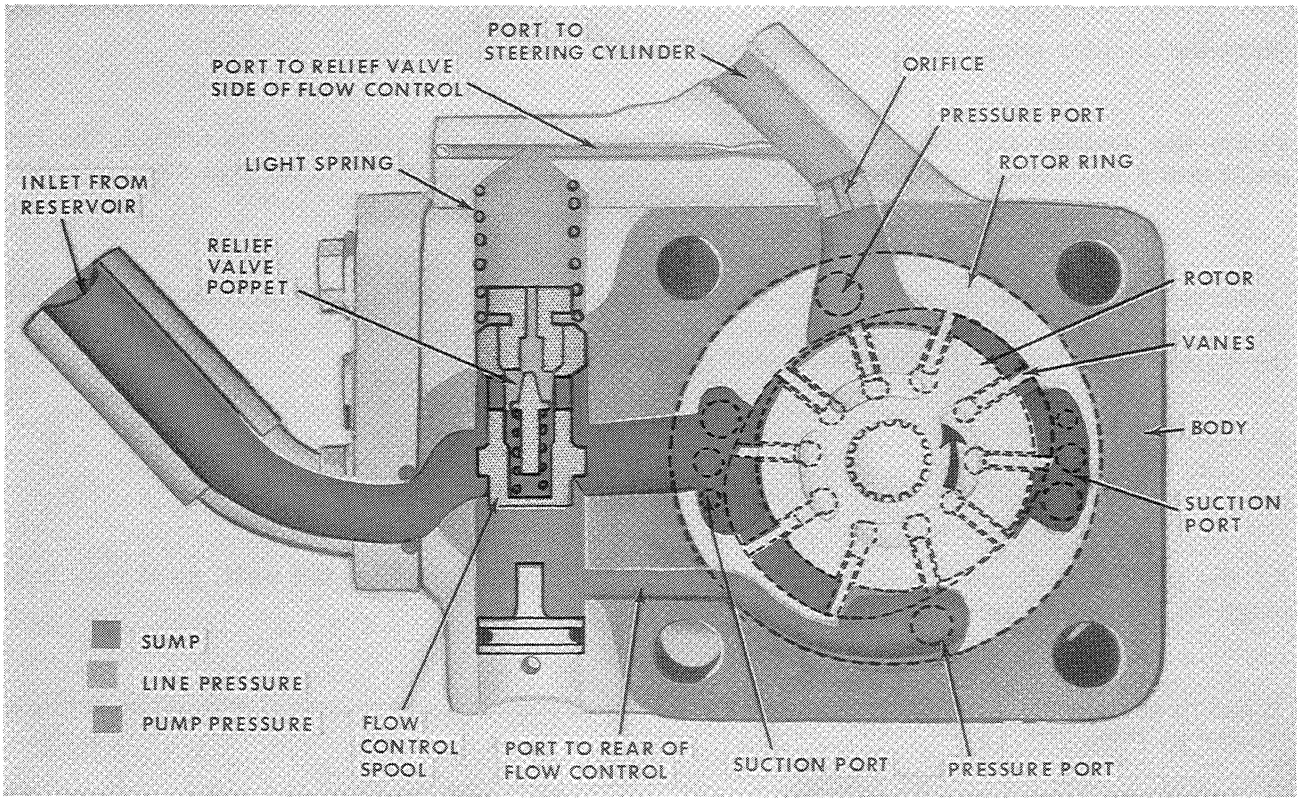

Figure PP-5

POWER STEERING PUMP
RELIEF VALVE PRESSURE CHECK

(Refer to Figure PP-6)

The pressure relief valve in the VTM vane type power steering pump has a 1000 PSI opening pressure. The valve is replaceable. It is not adjustable.

To check if the relief valve is functioning properly:

1. Remove the 1/8" pipe plug from the pump cover.

IMPORTANT

On some models, disconnect the pressure hose from the pressure tube. Install a D-26337 Test Tee between the pump pressure hose and the pressure tube.
NOTE: The D-26337 Test Tee can be ordered through the J. I. Case Central Parts Division, Racine, Wisconsin.

2. Install the 4501AA or A22791 Pressure Gauge in the pump cover or the test tee in the pressure line.

NOTE The 4501AA or A22791 Pressure gauge can be used on All Case Unit Loaders and purchased from the J. I. Case, Central Parts Division, Racine, Wisconsin.

3. Start the Loader engine and run at approximately 1500 RPM.

4. Place the Loader parallel with a solid wall so when the steering wheel is turned, the tires must come in contact with the wall before contact is made with the drop arm steering stops.

5. Observe the pressure gauge reading. The pressure gauge should read 950 to 1050 PSI with the engine running at 1500 RPM. This pressure gauge reading must be observed carefully. When the relief valve opens the pressure will drop off sharply.

IMPORTANT

As the pressure drops off, do not continue to hold the tire against the wall, as it may cause damage to the power steering pump relief valve.

6. If the pressure gauge registers below 950 or above 1050 PSI, the relief valve must be replaced. Refer to Page PP-12.

RELIEF VALVE PRESSURE CHECK

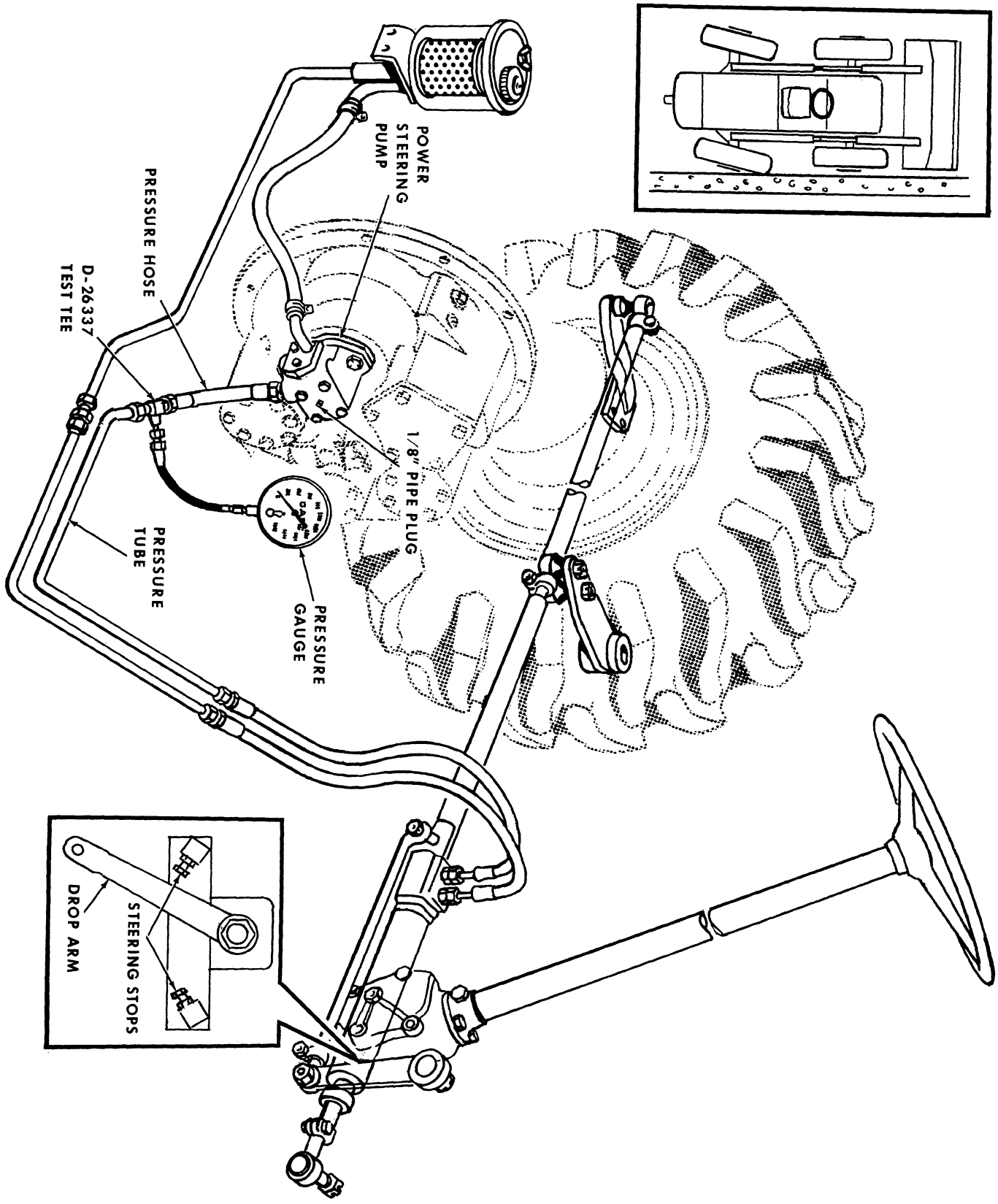

Figure PP-6

RESERVOIR AND FILTER ELEMENT

(Refer to Figure PP-7)

Capacity of Power Steering Reservoir (Approximately) ---------- 1-1/2 Pints

Type Fluid ---------- Automatic Transmission Fluid Type A

Change Interval ---------- 1000 Hours (more often in severe Dust Conditions).

Filter Element

A replaceable filter element is provided in the reservoir body. The filter element must be replaced every 1000 hours of operation (more often in severe dust conditions).

A. To replace the filter element remove the reservoir cover wing nut, washers, cover and cover gasket.

B. With the cover removed, the filter spring retainer and filter element can be removed from the reservoir.

C. Install a new element (either end up) and install the retainer, spring, cover and gasket, washers and wing nut in the order shown.

CAUTION: Use care not to damage the reservoir cover gasket when reinstalling the cover.

Power Steering Reservoir

To remove the reservoir, proceed as follows:

A. Clean the exterior of the reservoir thoroughly and disconnect the hose lines to allow the fluid to drain.

NOTE Cap the lines removed from the reservoir, to prevent dirt from entering the pump.

B. Remove the reservoir cover and filter as described above.

C. Remove the reservoir to bracket stud.

D. Remove the reinforcing plate capscrews. The reservoir, "O" rings and reinforcing plate can then be bemoved.

E. To install the reservoir, reverse the removal procedure.

F. Make sure new "O" rings are installed during assembly.

G. Tighten the capscrews and reservoir bracket stud to 15-18 foot pounds.

RESERVOIR AND FILTER ELEMENT

1. FILLER CAP AND DIPSTICK
2. WING NUT
3. WASHERS
4. COVER
5. COVER GASKET
6. FILTER SPRING
7. SPRING RETAINER
8. FILTER
9. RESERVOIR TO BRACKET STUD
10. REINFORCING PLATE
11. REINFORCING PLATE CAPSCREW
12. RESERVOIR "O" RINGS
13. RESERVOIR
14. RESERVOIR BRACKET
15. RESERVOIR TO BRACKET STUD NUT

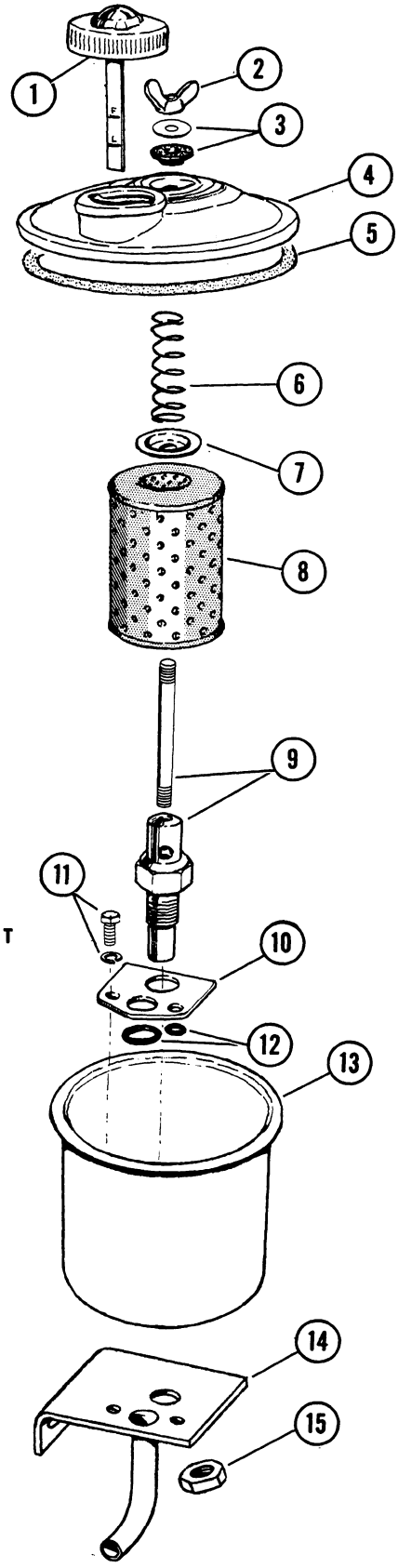

Figure PP-7

REMOVAL OF THE POWER STEERING PUMP (Refer to Figure PP-8)

A. Remove the pump outlet (pressure) hose and inlet (suction) hose.

B. Remove the two pump mounting bolts and remove the pump from the converter housing.

NOTE Refer to Group VIII for removal of the pump adapter plate from the converter housing.

C. Remove the pump adapter plate "O" ring and pump drive shaft spacer.

DISASSEMBLY OF THE POWER STEERING PUMP (Refer to Figure PP-9)

A. Pull the drive shaft out of the pump body. This can be done by hand.

B. Remove the four pump assembly cover bolts.

C. Remove the pump assembly cover.

D. Remove the pressure plate spring and suction port "O" ring.

E. Remove the pressure plate.

F. Remove the rotor and vanes from the rotor ring.

G. Remove the rotor ring and locating pins.

H. Remove the "O" ring from the pump body.

I. Remove the drive shaft oil seal from the pump body.

J. Remove the roll pin that retains the flow control valve in the pump cover.

K. Remove the flow control valve plug, valve and spring.

L. Remove the pump manifold capscrews, manifold and "O" ring.

INSPECTION OF THE POWER STEERING PUMP (Refer to Figure PP-9)

With the power steering pump disassembled, wash all parts in a clear mineral solvent before inspection. Replace all oil seals and "O" rings during assembly.

Rotor Ring, Vanes, Pressure Plate, Body - Inspect the surfaces of all the parts which are subjected to wear. Light scoring may be removed from the faces of the body or wear plate with crocus cloth or by lapping. Check the edges of the vanes for wear, replace if necessary. Check each rotor slot for sticky vanes or wear. The vanes should drop into the rotor slots by their own weight when both the slot and vanes are dry.

Flow Control Relief Valve - Inspect the valve bore in the pump cover. Check valve and bore for excessive wear, scoring or binding. Replace if necessary.

Flow Valve Spring
Free Length - 2-35/64 Inches
Active Coils - 9
6.25 Pounds Spring Pressure at Compressed Length of 1-19/64 Inches

Bushing - The drive shaft bushing is not replaceable. If the bushing becomes worn or damaged, the pump body sub-assembly must be replaced.

Drive Shaft and Seal - Replace the drive shaft seal at each overhaul to prevent oil leakage. Check the drive shaft for wear and scoring. Do not install a new seal on a shaft which is worn or damaged at the oil seal diameter. Replace the drive shaft if worn. Stone and polish any sharp edges on the shaft to prevent damage to the oil seal.

Pump Body and Cover - Inspect all mating surfaces for burrs and sharp edges.

REMOVAL OF THE POWER STEERING PUMP

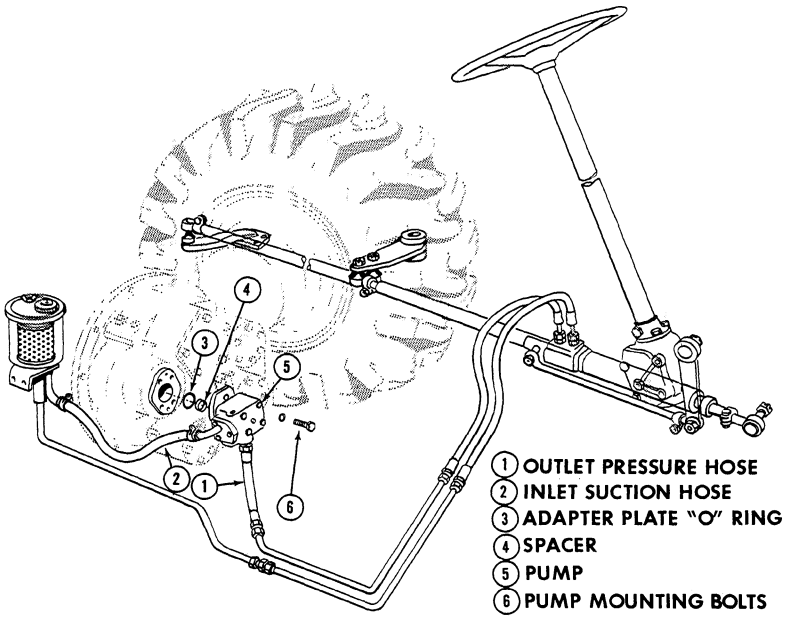

Figure PP-8

DISASSEMBLY AND INSPECTION

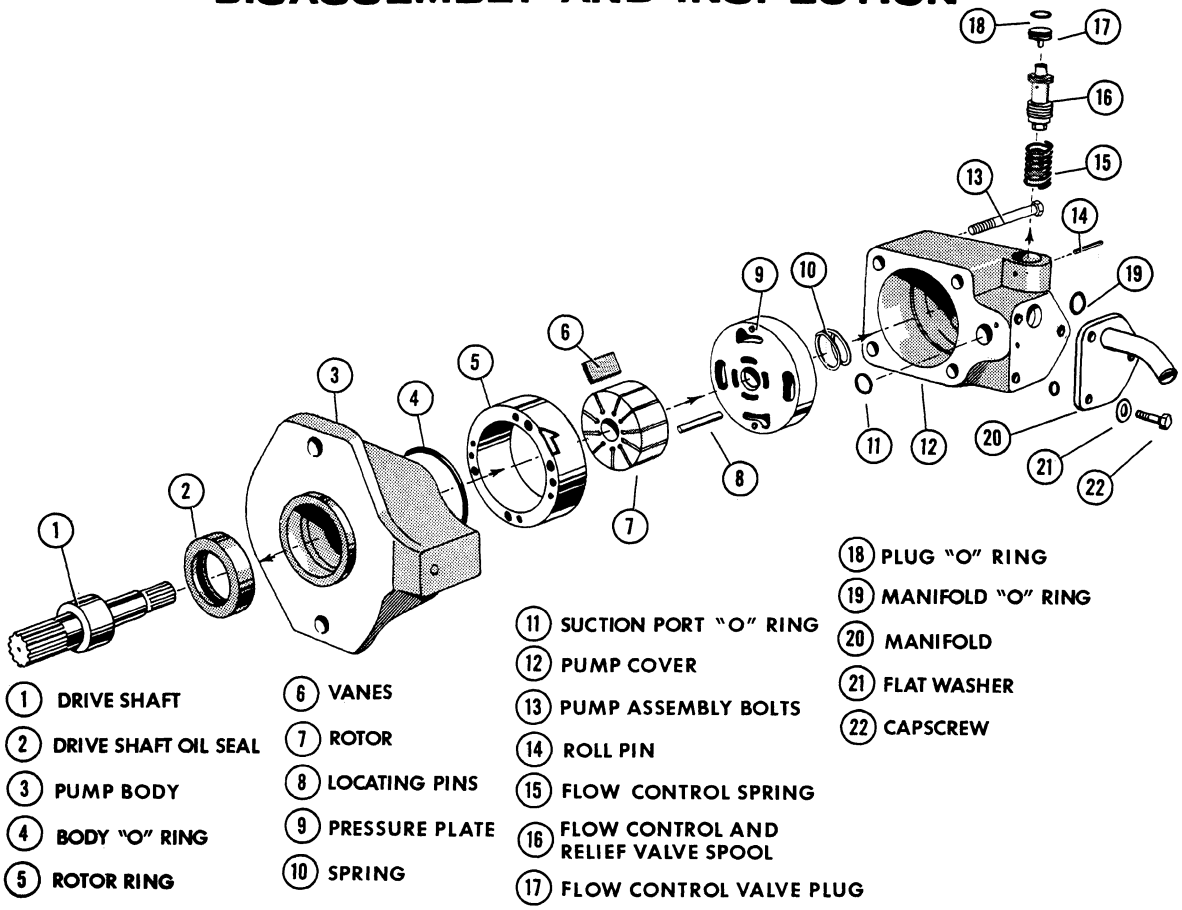

Figure PP-9

ASSEMBLY OF THE POWER STEERING PUMP

(Refer to Figure PP-10)

A. Coat all parts with clean Automatic Transmission Fluid Type "A" to faciliate reassembly.

B. Press a new oil seal into the pump body. Press the seal down until the seal seats on the shoulder in the pump body.

C. Carefully install the pump drive shaft through the oil seal and into the pump body to prevent damage to the seal and shaft bushing.

D. Install the locating pins in the pump body.

IMPORTANT

Install the rotor ring so that the arrow on the rotor ring is next to the pump body.

E. Install the rotor with the chamfered edge of the splined hole "in" or toward the pump body.

F. Install the vanes with their radius edge toward the rotor ring.

G. Install the pressure plate.

H. Install the "O" rings, pressure plate spring and pump cover.

I. Install the pump assembly bolts and torque evenly to 25 - 30 foot pounds.

J. Install the flow control valve spring, valve, plug and roll pin.

K. Install the "O" rings in the pump manifold. Secure the manifold to the pump with capscrews and flat washers.

INSTALLATION OF THE POWER STEERING PUMP

(Refer to Figure PP-11)

A. Install the pump drive shaft spacer.

B. Place a new "O" ring on the adapter and assemble the pump to the converter.

C. Install the pump mounting capscrews and torque to 35 - 40 foot pounds.

D. Install a new "O" ring on the pump outlet (pressure) hose and connect to the pump.

E. Connect the pump inlet (suction) hose to the pump manifold.

ASSEMBLY OF THE POWER STEERING PUMP

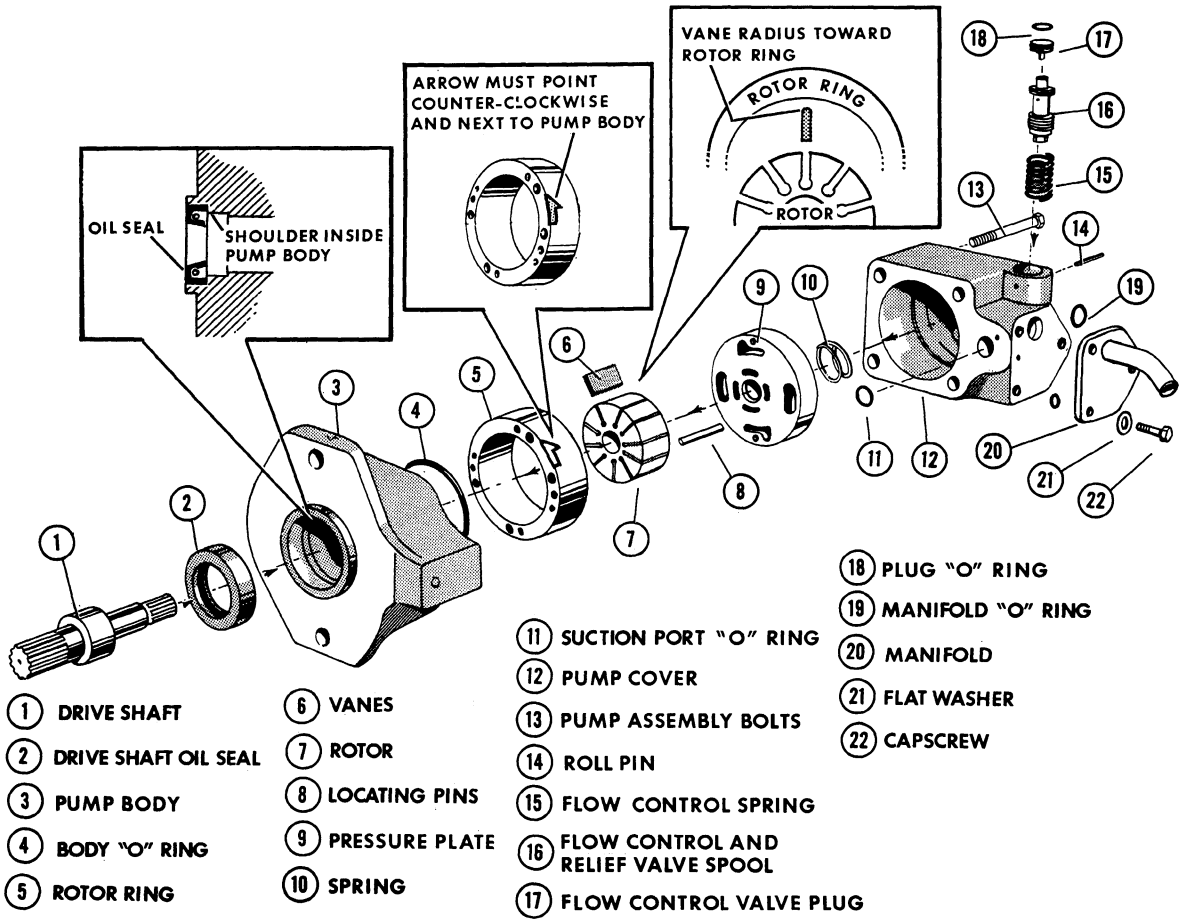

Figure PP-10

INSTALLATION OF THE POWER STEERING PUMP

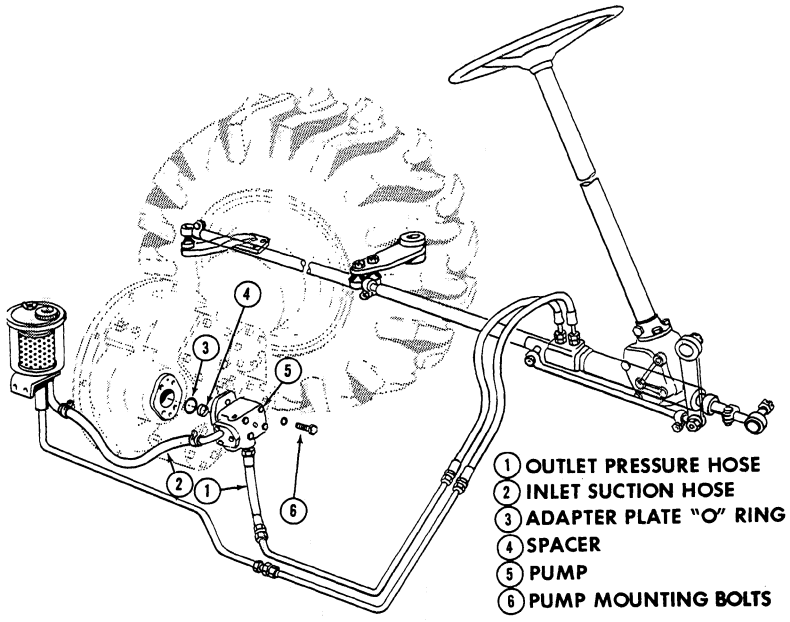

Figure PP-11

SERVICE SUGGESTIONS

Pump Not Delivering Oil

CAUSE	REMEDY
1. Pump shaft or gears broken.	1. Remove pump. Replace shaft and needed parts.
2. Flow control valve stuck open.	2. Remove and check the flow control valve. Refer to Inspection.
3. Vane or vanes stuck in rotor slots.	3. Remove and disassemble pump. Check the vanes as described in Inspection.
4. Pressure plate spring broken or pressure plate not contacting rotor ring.	4. Remove and disassemble pump. Install new pressure plate spring. Inspect for binding of pressure plate in bore.
5. Use of improper fluid.	5. Use fluid of proper viscosity, Automatic Transmission Fluid Type A.
6. Pump intake partially blocked.	6. Drain and flush complete system.
7. Air vent in filler cap clogged or filter dirty.	7. Remove filler cap and clean air vent. Check filter. Replace filter if dirty.

Pump Makes Noise

CAUSE	REMEDY
1. Restricted or partially clogged inlet line or clogged filter.	1. Pump must receive intake oil freely or cavatation will result. Drain and clean intake line and filter.
2. Air leak at pump intake, pipe connections or drive shaft seal. .	2. Tighten all tube and hose connections. Remove pump and check the drive seal.
3. Drive shaft misalignment caused by worn bushing.	3. Replace pump body.
4. Manifold seal leakage.	4. Replace manifold "O" rings.
5. Relief valve chatters.	5. Check power steering pump relief valve pressure as described on Page PP-8.
6. Pressure plate spring broken or pressure plate not contacting rotor ring.	6. Remove and disassemble pump. Install new pressure plate spring. Inspect for binding of pressure plate in bore.
7. Use of improper fluid.	7. Use fluid of proper viscosity, Automatic Transmission Fluid Type A.

NOTE: CASE CORPORATION reserves the right to make improvements in design or changes in specifications at any time without incurring any obligation to install them on units previously sold.

SECTION

X

SERVICING

THE C-270 SERIES

TORQUE CONVERTER

ON

CASE 4 WHEEL DRIVE

UNIT LOADERS

TABLE OF CONTENTS

SPECIFICATIONS AND CAPACITIES X-2

INTRODUCTION X-3

C270 SERIES CONVERTER FLOW DIAGRAM . . . . . X-4 and X-5

CONVERTER PRESSURE CHECKS . . . . . X-6 and X-7

REGULATOR VALVE . . . . . X-8 and X-9

- Disassembly X-8
- Inspection X-8
- Assembly X-9

CONVERTER CHARGING PUMP . . . . . X-10 and X-11

- Disassembly X-10
- Inspection X-11
- Assembly X-11

REMOVING OF CONVERTER AND ENGINE FROM LOADER . . . . . X-12 and X-13

INSTALLING OF CONVERTER AND ENGINE IN LOADER . . . . . X-12 and X-13

CONVERTER AND ACCESSORY DRIVES . . . . . X-14 thru X-17

- Disassembly . . . . . X-14 and X-15
- Inspection . . . . . X-14 and X-15
- Assembly . . . . . X-16 and X-17

SERVICE SUGGESTIONS X-18

SPECIFICATIONS

Converter Stall Ratio ---------- 3 to 1
Input and Output Rotation (As viewed from front of Loader) ---------- Counter-Clockwise
Charging Pump ---------- Gear Type, Positive Displacement 12 GPM at 2000 RPM.
Capacity (Includes Transmission) ---------- 25 Quarts
Type Oil ---------- Automatic Transmission Fluid Type A.
Converter In Pressure ---------- 40 - 60 PSI
Converter Out Pressure ---------- 20 - 40 PSI
Cooler Out Pressure ---------- 10 PSI
Regulator Out Pressure to Clutches --- 150-200 PSI before Trans. Serial No. 6744C and 200-250 PSI Trans. Serial No. 6744C and After.

The above oil pressures are at 1500 Engine RPM and oil temperature of 200° F.

Special Torque Specifications

Output Flange Nut ---------- 30 - 35 Ft. Lbs.
Turbine Hub Bolt ---------- 200 - 250 Ft. Lbs.
3/8" Capscrews ---------- 20 - 25 Ft. Lbs.
7/16" Capscrews ---------- 35 - 45 Ft. Lbs.
1/2" Capscrews ---------- 45 - 50 Ft. Lbs.

INTRODUCTION

General

The C-270 Series Torque Converter is used in Case Unit Loaders equipped with the 2000 Series Transmission. The converter is driven by a special fiber drive ring gear bolted to the engine flywheel. The hydraulic system, power steering and converter charging pumps are mounted to the converter housing and driven by the converter impeller at engine speed.

Converter Charging Pump

The converter charging pump is driven at engine speed to insure a constant flow of oil for charging the converter, actuating the transmission clutches and lubrication of the converter and transmission.

The oil is drawn from the transmission sump by the converter charging pump and circulated through the filter and the regulator valve to the converter.

Transmission and Converter Regulator Valve

The regulator valve controls the pressure and flow of oil from the charging pump to the transmission, converter and cooler. When the line pressure exceeds the relief valve setting the excess pressure is dumped into the converter housing and through gravity flow returned to the transmission.

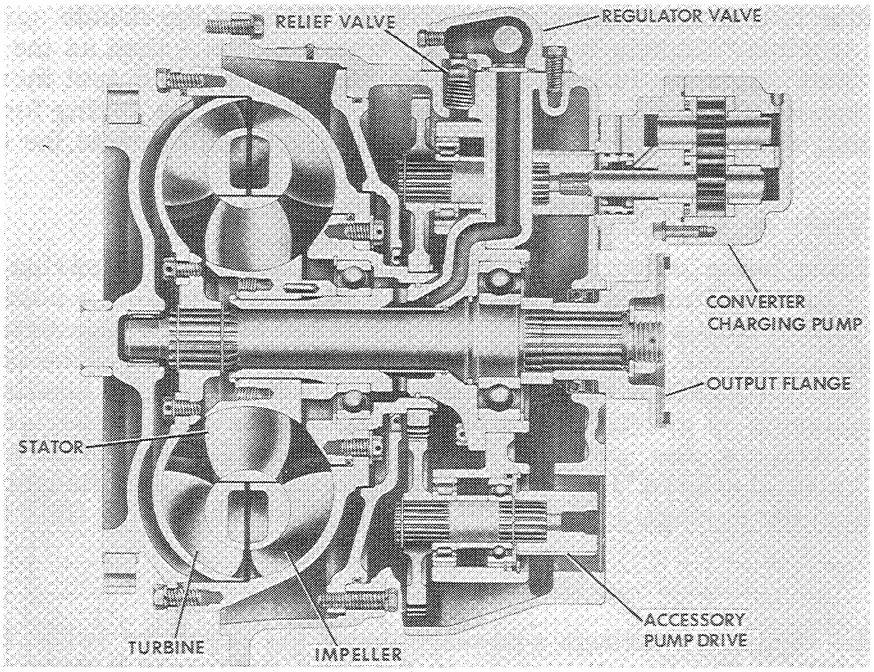

Figure X-1

Converter

The converter is charged by oil from the converter charging pump. The oil from the charging pump flows through the oil filter and then passes through the regulator valve and oil passages in the converter housing to the stator support, impeller hub and then to the impeller. When the converter is charged the impeller, driven by the engine, directs the oil outward in the same direction as the impeller. The oil then strikes the blades of the turbine causing it to turn in the same direction as the impeller. The oil then moves toward the center of the turbine, but in the opposite direction the turbine is turning. It is then redirected by the stator back to the impeller in the same direction in which the impeller is turning. When resistance or load on the turbine is increased, the velocity of the oil from the impeller to the turbine is increased thereby, increasing the torque (turning ability) of the turbine and converter output.

C270 SERIES CONVERTER FLOW DIAGRAM

(Refer to Figure X2)

Sump to Charging Pump

The fluid is drawn from the transmission sump through a fine bronze screen by the charging pump.

Charging Pump to Filter

The charging pump operates continuously when the engine is running circulating fluid to the filter. The filter removes dirt and foreign material from the fluid before it enters the converter and transmission regulator valve. The filter has a relief valve built in it to protect the element from excessive pressure build up due to cold fluid. If the filter element becomes plugged due to neglect, the pressure developed will allow the contaminated fluid to be passed through the system.

Regulator Valve to Transmission Control Valve

The fluid flows from the filter to the regulator valve-entering the regulator at the inlet port and flowing around the regulator spool - moving the spool back against a double spring allowing only a pre-determined pressure to flow to the transmission control valve - volume and pressure beyond the transmission requirements flow to the converter.

When the charging pump output is low (due to low engine speed) and transmission requirements are high (due to clutches starting to engage) the force of the double spring will allow the regulator spool to close slightly to supply the transmission - then as the transmission requirements are met (clutches fully engaged) or charging pump output increases (due to increased engine speed) the increased volume will overcome the spring forces and move the spool further open, allowing the excess volume and pressure to flow to the converter and relief valve.

Regulator Valve to Converter

When the charging pump output is great enough to overcome the spring forces behind the regulator spool - the spool moves back against the springs - opening a port to the converter. The relief valve allows only a pre-determined volume and pressure (converter charging pressure) to enter the converter. The volume and pressure in excess of the converter requirements flows to and through the relief valve port into the converter housing where it drains back to the transmission by gravity flow. The relief valve prevents converter cavitation and at the same time protects the converter and oil cooler from extreme pressure build up.

The regulator valve also has a "leak-off" port behind the spring and plunger to prevent pressure build up behind the springs and plunger and still allow lubricating fluid to flow around the spool.

Converter

Fluid enters the converter through a passage under the regulator valve, through the stator support to the impeller. The impeller picks up the fluid and forces it through the torus to the turbine. The fluid that is deflected by the turbine is then redirected by the stator back to the impeller. Fluid leaves the converter through a passage between the stator support and output shaft. Some of this fluid is metered out through drilled passages to lubricate the accessory drive gears. The balance of the fluid passes out through a passage to the fluid cooler connection. The lubricating fluid from the converter housing drains back to the transmission sump by gravity.

Oil Cooler

The fluid leaves the converter housing passage and enters the cooler where the fluid temperature is maintained by the cooler. The fluid leaves the cooler and returns to the transmission as a lubricant. After lubricating the transmission it drains back to the transmission sump where it is again drawn up by the charging pump.

C270 SERIES CONVERTER FLOW DIAGRAM

Engine Running

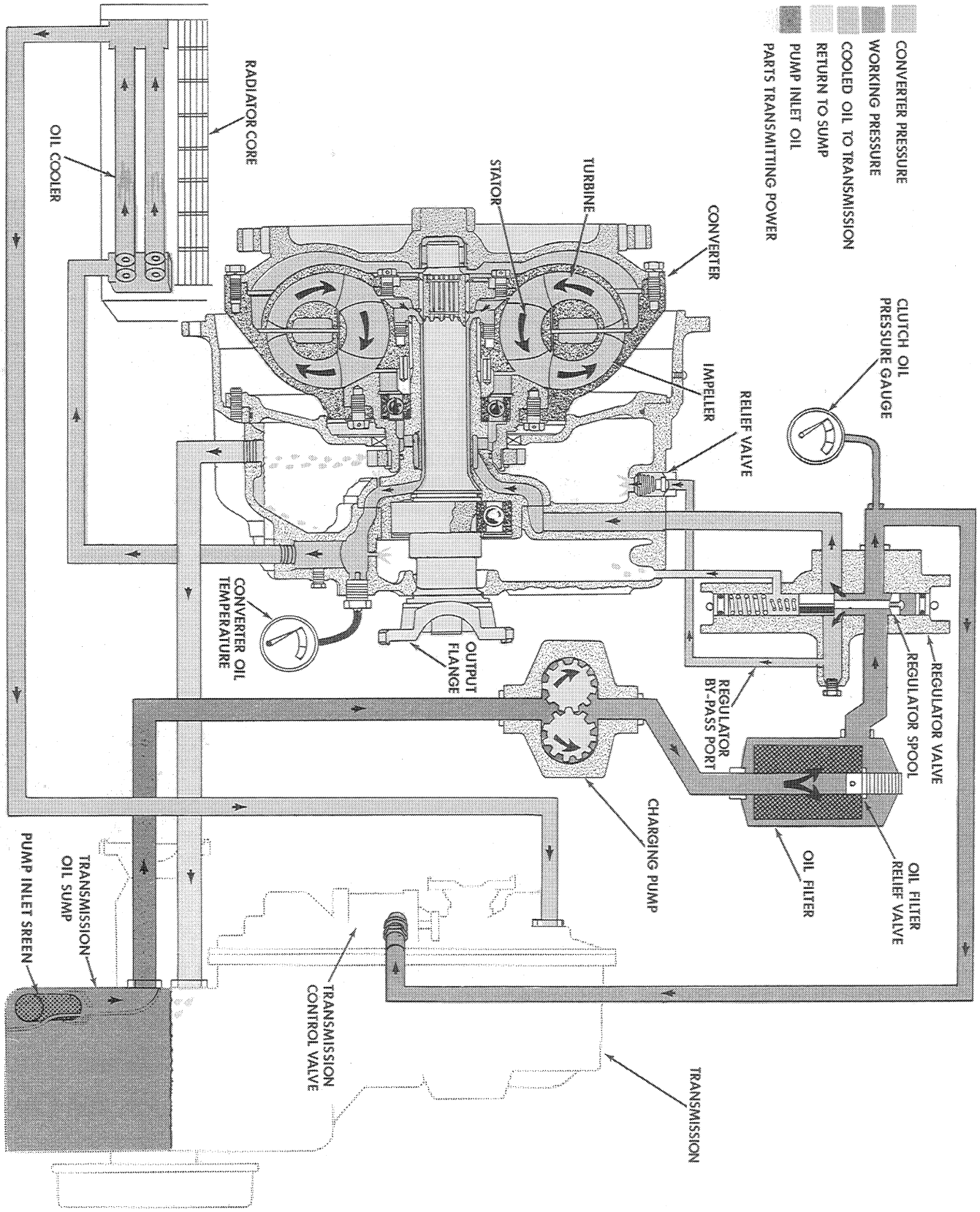

Figure X-2

CONVERTER PRESSURE CHECKS

Two pressure check points, one for checking converter "IN" pressure and one for checking converter "OUT" pressure are located in the converter housing and regulator valve.

When making these pressure checks the oil level in the transmission must be up to the "Full" level plug with the engine operating, Figure X-3. The oil must also be at operating temperature as indicated on the instrument panel gauge (center green zone or 200°).

CAUTION Transmission Controls in Neutral

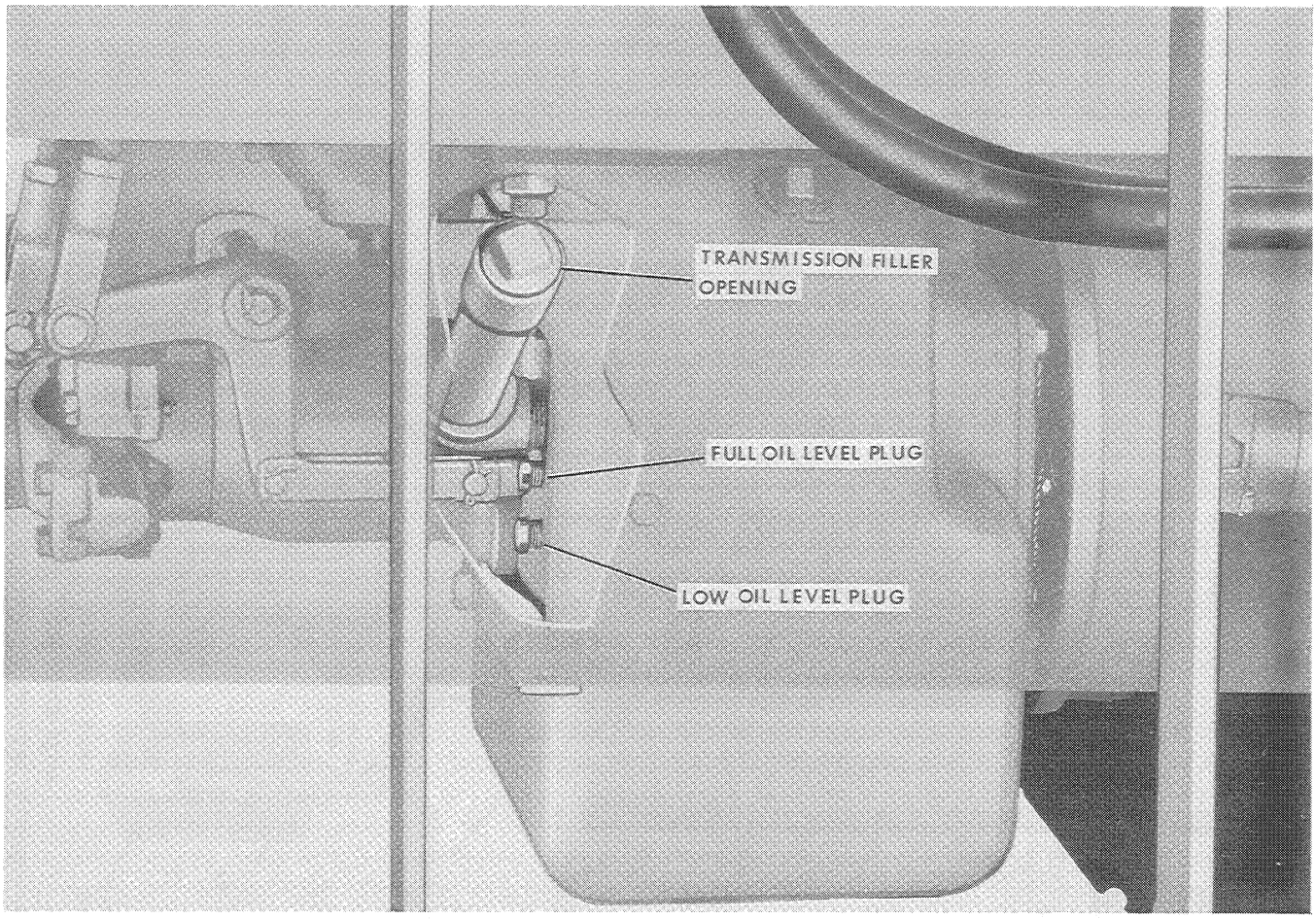

Figure X-3

The A20172 Gauge for checking converter pressure can be purchased from the J I Case Co , Central Parts Div , Racine, Wisconsin.

Converter "IN" pressure ---------- 40 to 60 PSI @ 1500 Engine RPM

Converter "OUT" pressure ---------- 20 to 40 PSI @ 1500 Engine RPM

CONVERTER PRESSURE CHECKS
Engine Running

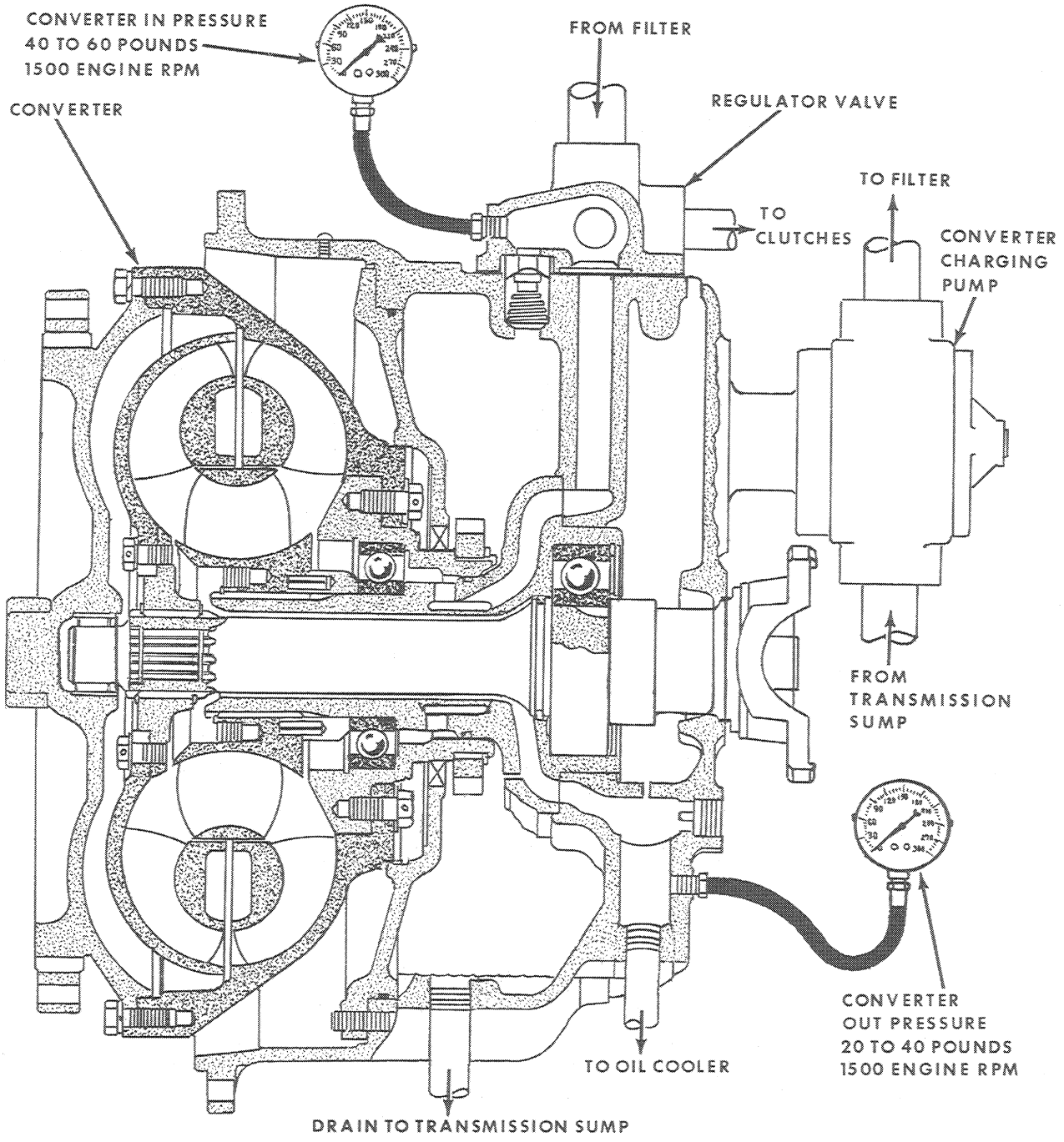

Figure X-4

REGULATOR VALVE DISASSEMBLY
(Refer to Figure X5)

A. Remove pressure regulator valve assembly. Care must be taken so relief valve plunger and spring are not lost.
B. Depress spring plug and remove roll pin. Remove plug, inner and outer regulator valve springs.
C. Remove roll pin, valve spool plug and valve spool.
D. Relief valve seat can be removed by using an Easy Out of the proper size.

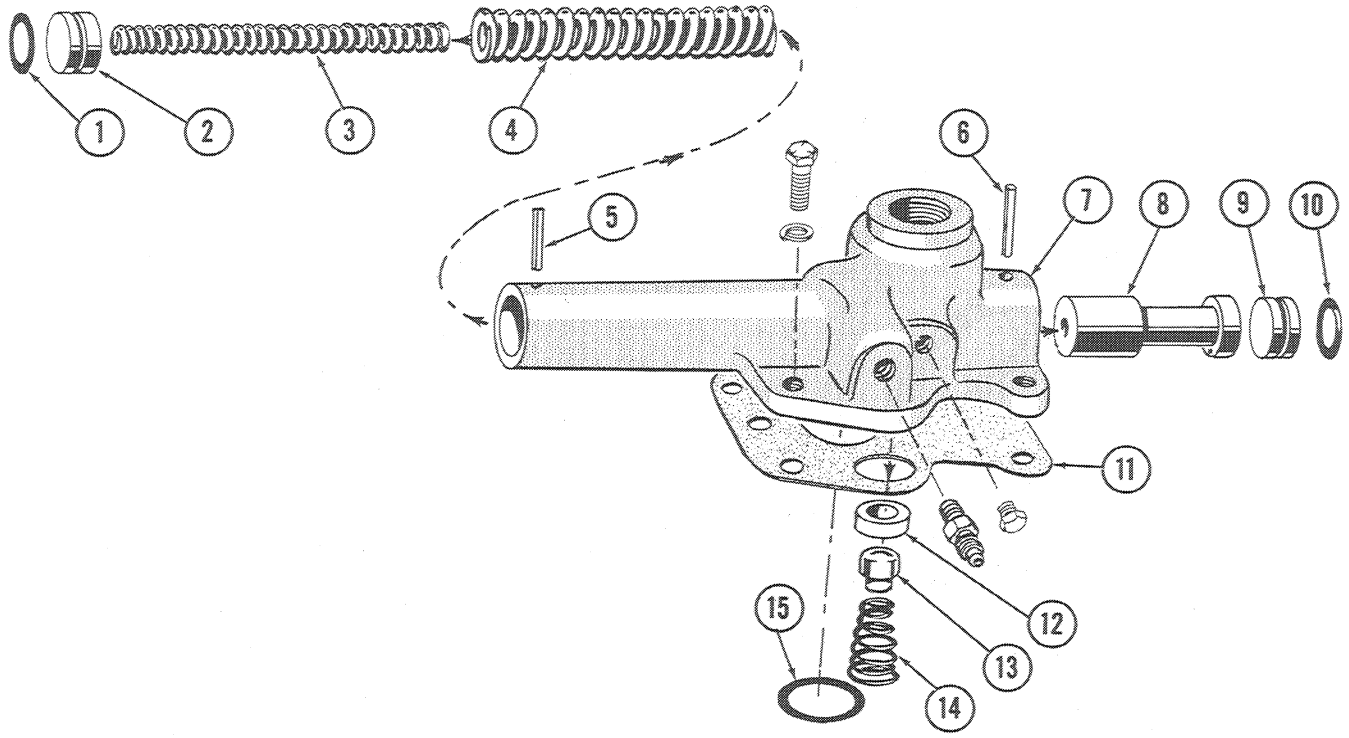

1. SPRING PLUG "O" RING
2. SPRING PLUG
3. REGULATOR SPOOL INNER SPRING
4. REGULATOR SPOOL OUTER SPRING
5. ROLL PIN
6. ROLL PIN
7. REGULATOR VALVE HOUSING
8. SPOOL
9. VALVE SPOOL PLUG
10. VALVE SPOOL PLUG "O" RING
11. HOUSING GASKET
12. RELIEF VALVE SEAT
13. RELIEF VALVE PLUNGER
14. RELIEF VALVE SPRING
15. CONVERTER INLET PORT "O" RING

Figure X-5

Inspection

Inspect valve spool and valve spool bore in housing for nicks or scoring. Clean bleed hole in valve spool. Replace housing and valve spool assembly if it is scored. Inspect relief valve plunger and relief valve seat for cracks, scoring or nicks.

Inspect the relief valve and regulator valve springs for cracked coils, proper length and pressure.

Regulator Relief Valve Spring Specifications

Free Length Approx.	1-3/16"
Wire Diameter	.071"
Number of Active Coils	12
Spring Pressure at Compressed Length of 3/4"	16 to 19 Pounds.

Pressure Regulator Spring Specifications

	Free Length	Wire Dia.	Active Coils	Press at 3-1/2 Inches
Prior to Serial No. 6744C				
Inner	4-31/32"	.075"	39	24 to 28 lbs.
Outer	4-25/32"	.112	26	44 to 48 lbs.
				Press at 3-7/16 Inches
Serial No. 6744C and after				
Inner	4-23/64"	.085"	26	34 to 38 lbs.
Outer	4-3/16"	.124	23	72 to 76 lbs.

REGULATOR VALVE ASSEMBLY
(Refer to Figure X6)

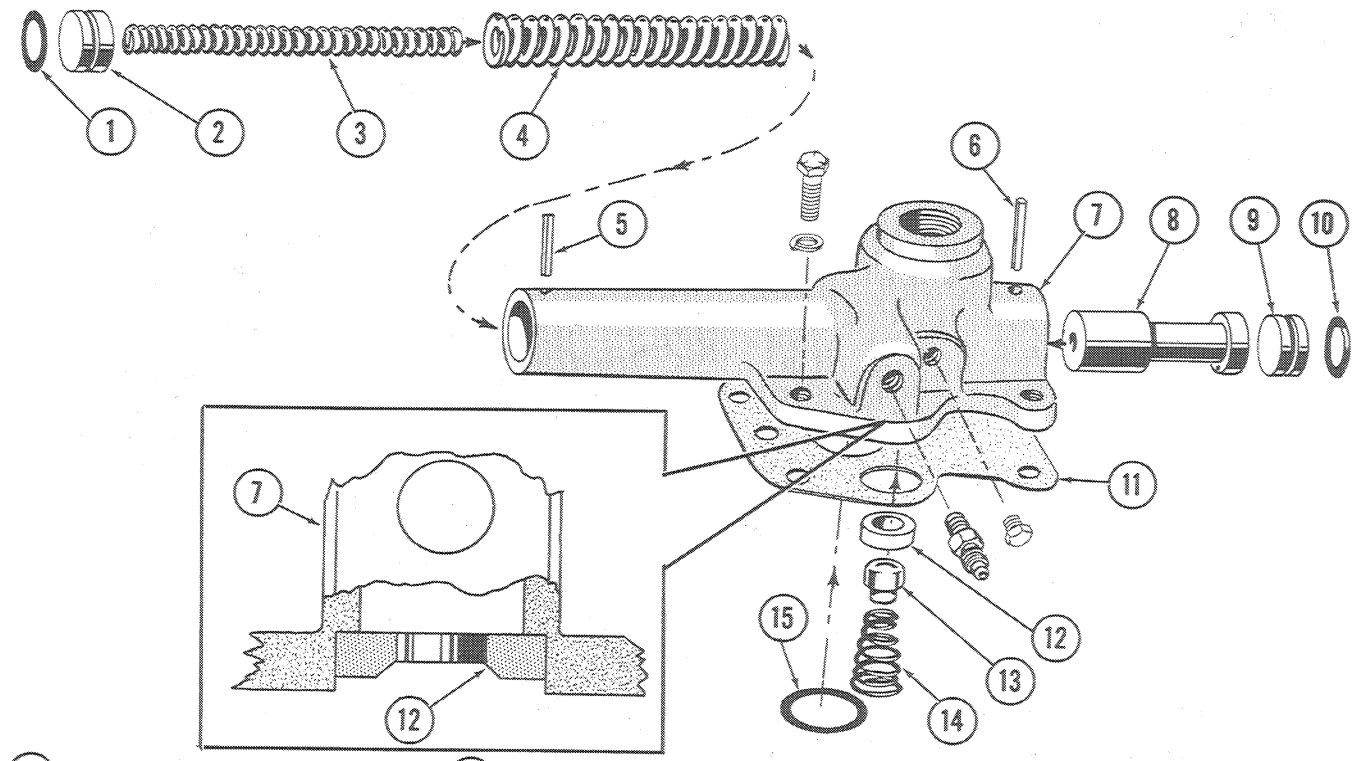

1. SPRING PLUG "O" RING
2. SPRING PLUG
3. REGULATOR SPOOL INNER SPRING
4. REGULATOR SPOOL OUTER SPRING
5. ROLL PIN
6. ROLL PIN
7. REGULATOR VALVE HOUSING
8. SPOOL
9. VALVE SPOOL PLUG
10. VALVE SPOOL PLUG "O" RING
11. HOUSING GASKET
12. RELIEF VALVE SEAT
13. RELIEF VALVE PLUNGER
14. RELIEF VALVE SPRING
15. CONVERTER INLET PORT "O" RING

Figure X-6

A. Press new relief valve seat into housing until it bottoms if it was taken out for replacement.
B. Coat all parts with type "A" Automatic Transmission Oil. Install valve spool, valve stop plug with new "O" ring and insert roll pin.
C. Install inner and outer valve springs. Install spring plug with new "O" ring. Depress spring plug and install roll pin.
D. Install relief valve plunger and spring in converter housing. Install new "O" ring in valve housing to converter inlet port. Install new regulator gasket coated with grease and install regulator valve.

CONVERTER CHARGING PUMP DISASSEMBLY
(Refer to Figure X7)

The converter charging pump has an aluminum body and cover so care must be used in disassembly and reassembly to prevent the machine surfaces from nicks and scratches.

A. Mark the pump body and cover so it can be reassembled with the suction and pressure ports in the same location as they are before disassembly.

B. Remove the pump cover from the pump body and remove the 10 thrust plate springs, 5 from each outer thrust plate.

C. Remove the drive and driven gear assemblies, remove the "O" rings, fiber washers and outer thrust plates from the gear assemblies.

D. Lift out the inner thrust plate with your finger keeping them straight as they are removed. ***CAUTION*** They will bind and will not come out if they are cocked.

E. Remove the seal retainer snap ring and lift the seal assembly out with your finger. It may require tapping the mounting flange of the pump on a wood surface to remove the seal assembly.

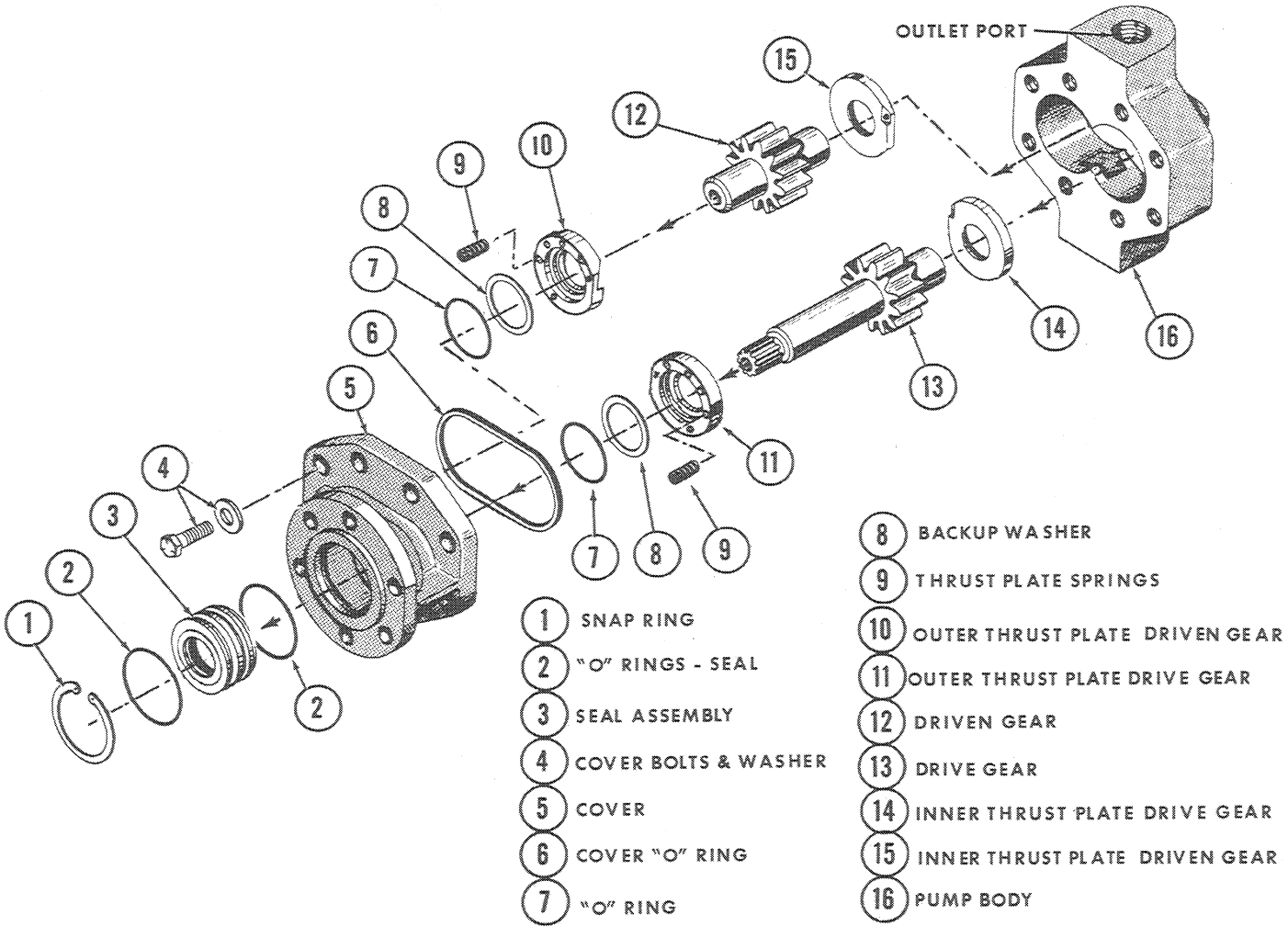

Figure X-7

INSPECTION

Clean all parts prior to inspection. When inspection of the aluminum body, cover and bearings, show excess wear, nicks, grooves or cracks, complete pump must be replaced.

Thrust plates must be replaced when they show excess wear or grooves.

The gears should be inspected for cracked or worn teeth. If one or both gears are worn or cracked, both gears and shaft assemblies must be replaced. The shaft seal assembly can only be replaced as an assembly. Replace all "O" rings, whenever the pump is reassembled.

CONVERTER CHARGING PUMP ASSEMBLY
(Refer to Figure X8)

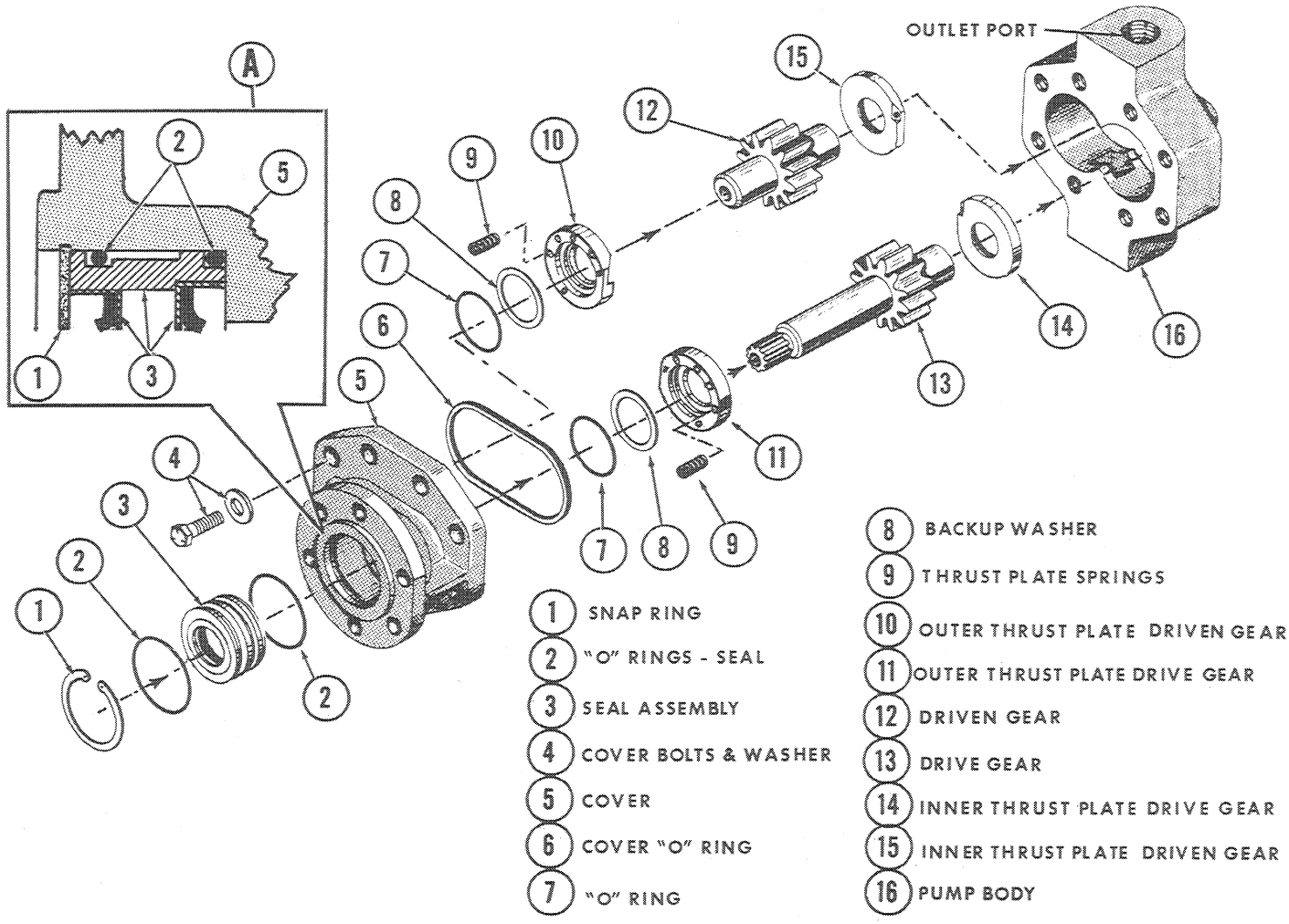

Figure X-8

Coat all parts as they are installed with Type "A" Automatic Transmission Fluid. Install new "O" rings on the seal assembly. Insert the seal assembly into the pump cover (Refer to inset A) and install snap ring. Install inner thrust plates.

NOTE When installing inner and outer thrust plates make sure the relief ports are to the outlet part of the pump. Install the shaft and gear assemblies, outer thrust plates, 10 thrust plate springs, back up washers and "O" rings.

Install the body to cover "O" ring, cover bolts in this order.

REMOVAL OF CONVERTER AND ENGINE FROM LOADER
(Refer to Figure X9)

To remove the converter from the Loader, proceed as follows: Steam clean the area around the engine and converter. Remove the converter and engine as a unit. Cap and plug all hoses and lines as they are disconnected.

A. Drain the cooling system and hydraulic system reservoir.

B. Remove the two piece hood, hoodsides and air cleaner.

C. Disconnect and remove fuel tank.

D. Disconnect the rear lamp wires, circuit breaker wires, temperature unit wires, oil pressure unit wires, battery wires at solenoid and armature wire at regulator.

E. Disconnect battery cable at solenoid and tape end.

F. Disconnect the upper and lower radiator hoses and the two oil cooler hoses at the radiator.

G. Using a hoist, lift the radiator and grille assembly from the Loader.

H. Disconnect the throttle linkage, tachometer cable, decompressor (Diesel) or choke control (Gasoline) and the air intake hose and exhaust pipe.

I. Disconnect the transmission filter from the chassis. Disconnect the hoses to the power steering pump, hydraulic system pump and converter pump.

J. Remove the fire wall, drive shaft and converter pressure gauge tube.

K. Using a hoist, lift the engine and converter from the chassis as a unit.

L. Disconnect the transmission oil filter hoses and remove converter and housing from engine flywheel housing.

M. Remove fiber drive ring from flywheel.

INSTALLATION OF CONVERTER AND ENGINE IN LOADER
(Refer to Figure X9)

A. Install fiber drive ring to flywheel converter assembly to engine and connect transmission oil filter hoses.

B. Lift engine and converter assembly up and sit in place in the Loader and install the mounting bolts.

C. Connect the drive shaft and install the fire wall and converter pressure tube.

D. Connect the hoses to the steering pump, hydraulic system pump and converter pump.

E. Connect the wires to the temperature units, oil pressure unit, regulator, circuit breaker and solenoid.

F. Connect the battery cable to the solenoid and the tachometer cable.

G. Connect the throttle linkage, decompressor (Diesel) or choke control (Gasoline) and the air intake hose and exhaust pipe.

H. Install the radiator end grill assembly. Connect the lamp wires, radiator hoses and oil cooler hoses.

I. Install and connect fuel tank.

J. Install two piece hood, hood sides and air cleaner.

K. Fill the cooling system, hydraulic system, and transmission.

REMOVAL AND INSTALLATION OF CONVERTER AND ENGINE

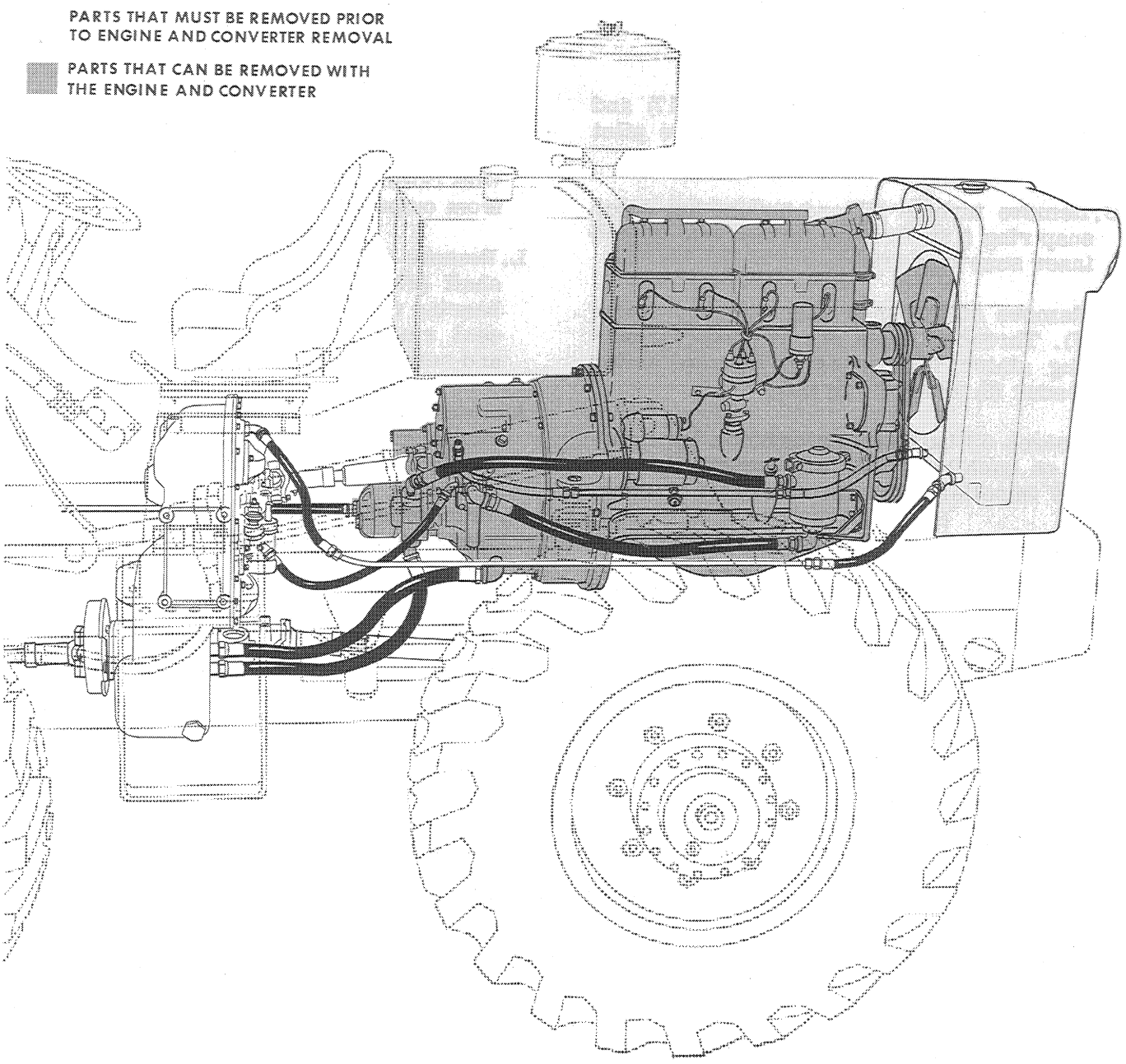

Figure X-9

CONVERTER AND ACCESSORY DRIVE DISASSEMBLY

(Refer to Figure X10)

A. Remove the impeller cover (2) using two bolts in the threaded puller holes 180° apart in the impeller cover. Remove cover "O" ring (3).

B. Remove pilot bearing snap ring (17) and use OTC No. 954 puller to remove pilot bearing (4).

C. Remove turbine (5) and turbine hub outer snap ring (18). Remove turbine hub (6) and inner snap ring (19).

D. Remove stator snap ring (20) and stator (7). Threaded holes are provided for pulling stator if necessary. Remove stator Spacer (8) and roll pin (21).

E. Loosen oil baffle retaining bolts. Tap lightly on each bolt. This will loosen oil baffle and impeller from the converter housing.

F. Remove impeller gear snap ring (23), impeller gear (22) and oil baffle (14) from impeller. Press the oil seal (16) from the oil baffle and remove the "O" ring (15) from outer edge of oil baffle.

G. Remove hub (11) from impeller (13) and "O" ring (12) from the outer edge of hub.

H. Remove hub bearing snap ring (9) and press bearing (10) from impeller hub.

I. Remove accessory drive gear snap ring (33) and gear (34).

J. Remove output shaft flange nut (42), washer (39), "O" ring (38) and flange (37).

K. Remove stator support and output shaft assembly by tapping threaded end of shaft with rawhide hammer. Remove spacer (30) from output shaft.

L. Remove snap ring (29) and press output shaft (27) from stator support (25). Press bearing (28) from output shaft. Remove oil seal rings (24) (26) from stator support and output shaft.

M. Remove the converter charging pump, hydraulic steering pump and Loader hydraulic pump. Remove steering pump adapter.

N. Remove offset drive cover (32) if it appears to be leaking and remove "O" ring (31).

O. Remove pump adapter sleeve (44), snap ring (43) and washer (49). Tap stub shaft and bearing assembly from inside converter housing.

P. Remove snap ring (48) and press bearings (45) (46) and spacer (40) from stub shaft (41).

NOTE Disassembly of the accessory pump drives are the same.

INSPECTION

Replace all parts that are worn or damaged. Replace all "O" ring oil seals and oil rings. Clean and dry all parts in a suitable cleaning fluid. Inspect all gears for chipped, cracked or excess wear of teeth.

Inspect the internal and external splines for nicks or burrs.

Inspect all bearings for roughness while rotating and check for chipped needles or balls. Replace any bearing that is still rough in rotation after it has been cleaned and oiled.

Inspect all snap rings for distortion or excess wear. Any rings that do not snap into the groove when installed should be replaced.

Inspect impeller, turbine and stator for cracked vanes, nicks or burrs. If nicks or burrs cannot be removed with a crocus cloth, parts must be replaced. If there are any cracked or bent vanes on the impeller, turbine or stator, replace them.

CONVERTER AND ACCESSORY DRIVE DISASSEMBLY

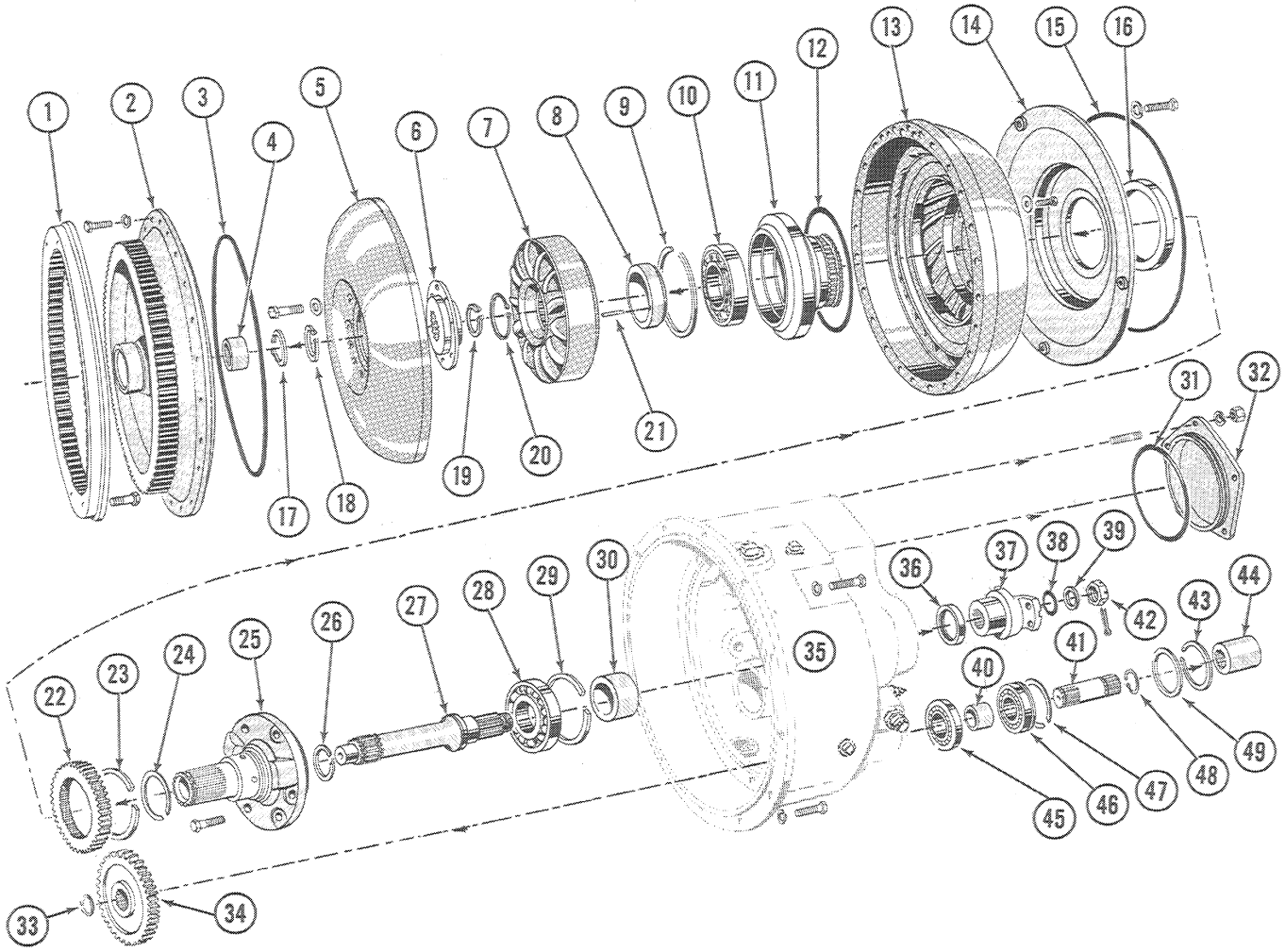

1. DRIVE RING GEAR
2. IMPELLER COVER
3. COVER "O" RING
4. PILOT BEARING
5. TURBINE
6. TURBINE HUB
7. STATOR
8. STATOR SPACER
9. SNAP RING
10. HUB BEARING
11. IMPELLER HUB
12. HUB "O" RING
13. IMPELLER
14. OIL BAFFLE
15. BAFFLE "O" RING
16. OIL SEAL
17. SNAP RING
18. OUTER SNAP RING
19. INNER SNAP RING
20. STATOR SNAP RING
21. ROLL PIN
22. IMPELLER GEAR
23. SNAP RING
24. OIL RING
25. STATOR SUPPORT
26. SHAFT OIL RING
27. OUTPUT SHAFT
28. BEARING
29. SNAP RING
30. SPACER
31. COVER "O" RING
32. OFFSET DRIVE COVER
33. SNAP RING
34. GEAR
35. HOUSING
36. OIL SEAL
37. OUTPUT FLANGE
38. "O" RING
39. WASHER
40. BEARING SPACER
41. STUB SHAFT
42. NUT
43. SNAP RING
44. SLEEVE
45. INNER BEARING
46. OUTER BEARING
47. SNAP RING
48. SNAP RING
49. RETAINING WASHER

Figure X-10

CONVERTER AND ACCESSORY DRIVE ASSEMBLY

(Refer to Figure X11)

Lubricate all parts with Type "A" Automatic Transmission Fluid before installing.

A. Press outer stub shaft bearing (46) (Refer to inset A) on shaft (41) until the locating snap ring (48) can be installed in the groove. Install bearing spacer (40) and press inner bearing (45) against spacer. Install outer bearing snap ring (47). Install stub shaft assembly into housing until the outer bearing snap ring bottoms on housing. Install outer bearing washer (49) and snap ring (43).

B. Press output shaft bearing (28) on shaft (27) until it bottoms. Install oil ring in groove (26). Press output shaft assembly into stator support (25) until it bottoms being careful not to damage the oil ring and install bearing retainer snap ring (29). Install oil ring (24) on the stator support and flange spacer (30) on shaft.

C. Press in output shaft oil seal (36) with lip toward the housing (35) to a depth of 5/16" (Refer to inset B).

D. Install stator support and shaft assembly into housing and tighten bolts to 40 to 50 foot pounds. Lockwire the bolts in pairs.

E. Install accessory drive gear (34) and snap ring (33).

F. Install output flange (37) "O" ring (38), washer (39) and torque nut (42) to 200 to 250 foot pounds. Install cotter pin.

G. Install offset output flange cover (32) with new "O" ring (31). Install steering pump adapter plate.

H. Press new oil seal (16) into oil baffle (14) (Refer to inset C) with lip toward output flange. Install "O" ring (15) in the oil baffle outer groove.

I. Press bearing (10) into impeller hub (11) and install snap ring (9).

J. Install new "O" ring (12) in the outer edge of impeller hub (11). Install hub into impeller (13) making sure oil holes are aligned and torque bolts 35 to 40 foot pounds. Lockwire the bolts in pairs.

K. Install oil baffle (14) on impeller assembly. Install hub gear (22) and retain with snap ring (23).

L. Install impeller and oil baffle assembly into converter housing. Align bolt holes in oil baffle with bolt holes in converter housing. Tighten bolts evenly 20 - 25 foot pounds.

M. Install spacer roll pin (21) and spacer (8) on stator (7). Install stator and secure with snap ring (20).

N. Install turbine hub inner snap ring (19), turbine hub (6) and outer snap ring (18).

O. Install turbine (5) and torque bolts 30 - 35 foot pounds - Lockwire the bolts in pairs.

P. Press new pilot bearing (4) into impeller cover (2) and install snap ring (17).

Q. Install new "O" ring (3) on impeller cover (2). Install cover aligning holes with impeller and torque bolts 20 - 25 foot pounds.

R. Install accessory pump drive sleeves (44) and install converter charging pump, power steering pump and hydraulic pump.

S. Install drive ring on flywheel and torque new bolts 20 to 25 foot pounds above the torque required to run the bolts in place. Lockwire the bolts with a continuous wire so it does not interfere with the gear teeth.

CONVERTER AND ACCESSORY DRIVE ASSEMBLY

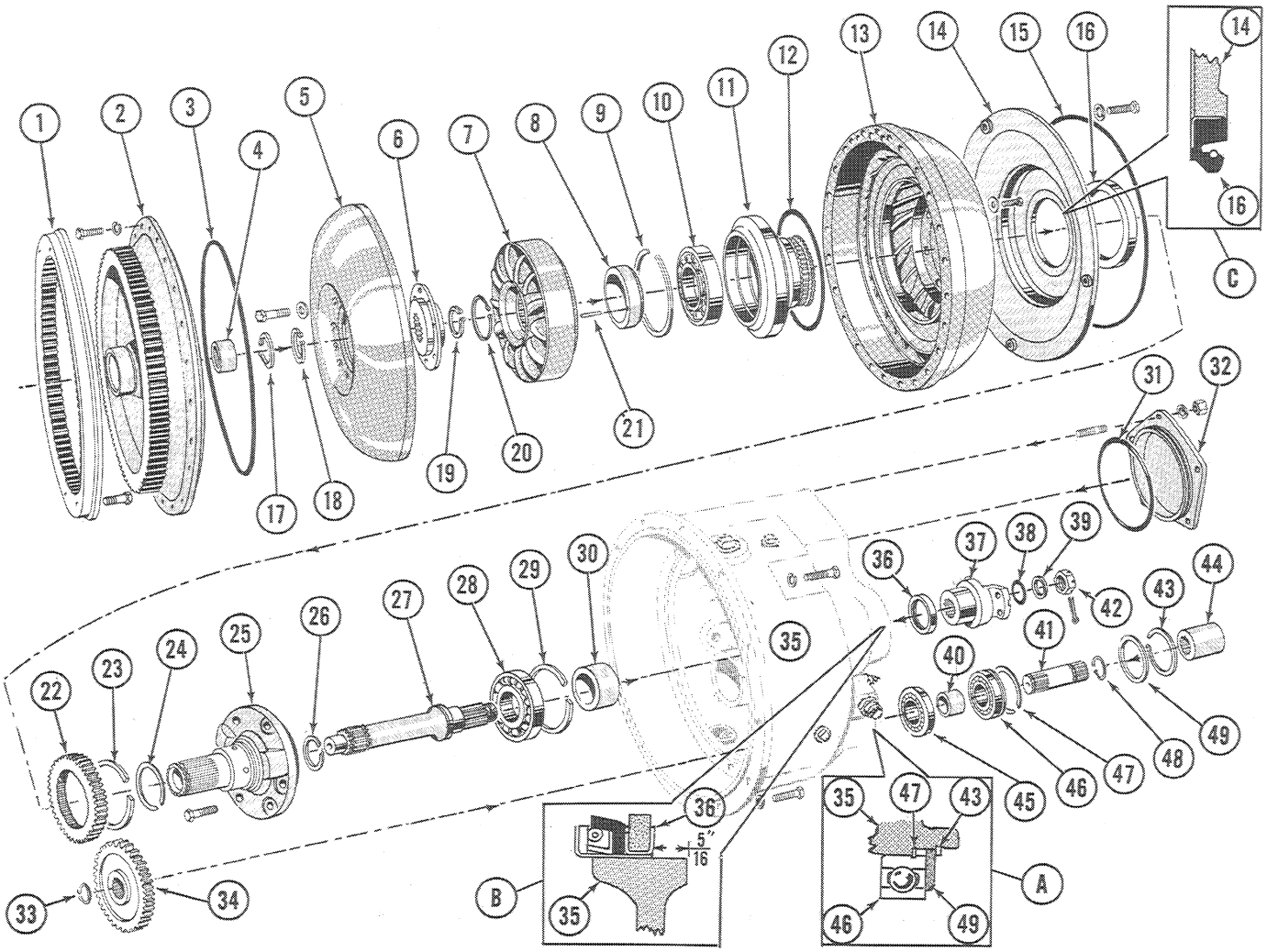

1. DRIVE RING GEAR
2. IMPELLER COVER
3. COVER "O" RING
4. PILOT BEARING
5. TURBINE
6. TURBINE HUB
7. STATOR
8. STATOR SPACER
9. SNAP RING
10. HUB BEARING
11. IMPELLER HUB
12. HUB "O" RING
13. IMPELLER
14. OIL BAFFLE
15. BAFFLE "O" RING
16. OIL SEAL
17. SNAP RING
18. OUTER SNAP RING
19. INNER SNAP RING
20. STATOR SNAP RING
21. ROLL PIN
22. IMPELLER GEAR
23. SNAP RING
24. OIL RING
25. STATOR SUPPORT
26. SHAFT OIL RING
27. OUTPUT SHAFT
28. BEARING
29. SNAP RING
30. SPACER
31. COVER "O" RING
32. OFFSET DRIVE COVER
33. SNAP RING
34. GEAR
35. HOUSING
36. OIL SEAL
37. OUTPUT FLANGE
38. "O" RING
39. WASHER
40. BEARING SPACER
41. STUB SHAFT
42. NUT
43. SNAP RING
44. SLEEVE
45. INNER BEARING
46. OUTER BEARING
47. SNAP RING
48. SNAP RING
49. RETAINING WASHER

Figure X-11

SERVICE SUGGESTIONS

Low Converter Fluid Pressure

CAUSE	REMEDY
1. Worn oil sealing rings and "O" rings.	1. Remove, disassemble converter and replace rings.
2. Worn oil pump.	2. Rebuild or replace pump.
3. Relief valve open.	3. Clean and inspect relief valve spring and plunger.

High Converter Fluid Pressure

CAUSE	REMEDY
1. Oil cooler or oil cooler lines restricted.	1. Clean, inspect and replace hoses, lines or oil cooler.
2. Oil to heavy.	2. Drain and refill with Type "A" Automatic Transmission Fluid.
3. Cold oil.	3. As converter operation temperature becomes normal, pressure should drop.

High Converter Fluid Temperature

CAUSE	REMEDY
1. Oil cooler or lines restricted.	1. Clean, inspect and replace hose lines or cooler.
2. Low oil level.	2. Fill to proper level.
3. Working Loader in improper range.	3. Select proper work range for working conditions.
4. Worn converter charging pump.	4. Rebuild or replace pump.
5. Pump suction lines drawing air.	5. Inspect and tighten lines and hoses.
6. Converter drain to transmission sump not installed properly.	6. Line must maintain constant gradual drop to the sump for proper gravity drain.

SERVICE SUGGESTIONS (Continued)

Lack of Power

CAUSE	REMEDY
1. Engine not functioning properly.	1. Check and tune engine.
2. Air in oil.	2. Check converter pump suction lines for leaks and fill transmission to proper oil level.
3. Improper oil.	3. Drain and refill with type "A" Automatic Transmission Fluid.

External Fluid Leakage

CAUSE	REMEDY
1. Accessory drive pump flanges.	1. Replace gaskets.
2. Output shaft.	2. Replace output shaft oil seal.
3. At base of regulator valve.	3. Replace gasket and "O" ring.

Internal Fluid Leakage

CAUSE	REMEDY
1. Impeller cover "O" ring.	1. Replace "O" ring.
2. Oil baffle "O" ring.	2. Replace "O" ring.
3. Oil baffle seal.	3. Replace seal.

SECTION

Y

SERVICING THE 2000 SERIES TRANSMISSION ON CASE 4 WHEEL DRIVE UNIT LOADERS

PRINTED IN U.S.A.

TABLE OF CONTENTS

INTRODUCTION Y-4

HOW IT WORKS . . . . . Y-4 thru Y-5

FLOW DIAGRAMS Y-6

TRANSMISSION

- Removal Y-8
- Installation Y-8

TRANSMISSION CONTROL VALVE

- Disassembly Y-10
- Inspection Y-10
- Assembly Y-10

TRANSMISSION COVER AND CLUTCH PACKS

- Removal Y-12
- Inspection Y-12
- Installation Y-12

FORWARD, REVERSE, LOW OR HIGH CLUTCH

- Disassembly. Y-14
- Inspection Y-14
- Assembly Y-16

HIGH - LOW MANUAL RANGE

- Disassembly Y-18
- Inspection Y-18
- Assembly Y-20

REAR AXLE SHIFT OUT

- Disassembly Y-22
- Inspection Y-22
- Assembly Y-22

TRANSMISSION PRESSURE CHECK Y-24

IMPORTANT

The forward and reverse clutches covered in this section describe these clutches as they are used in Case 4 Wheel Drive Unit Loaders Only.

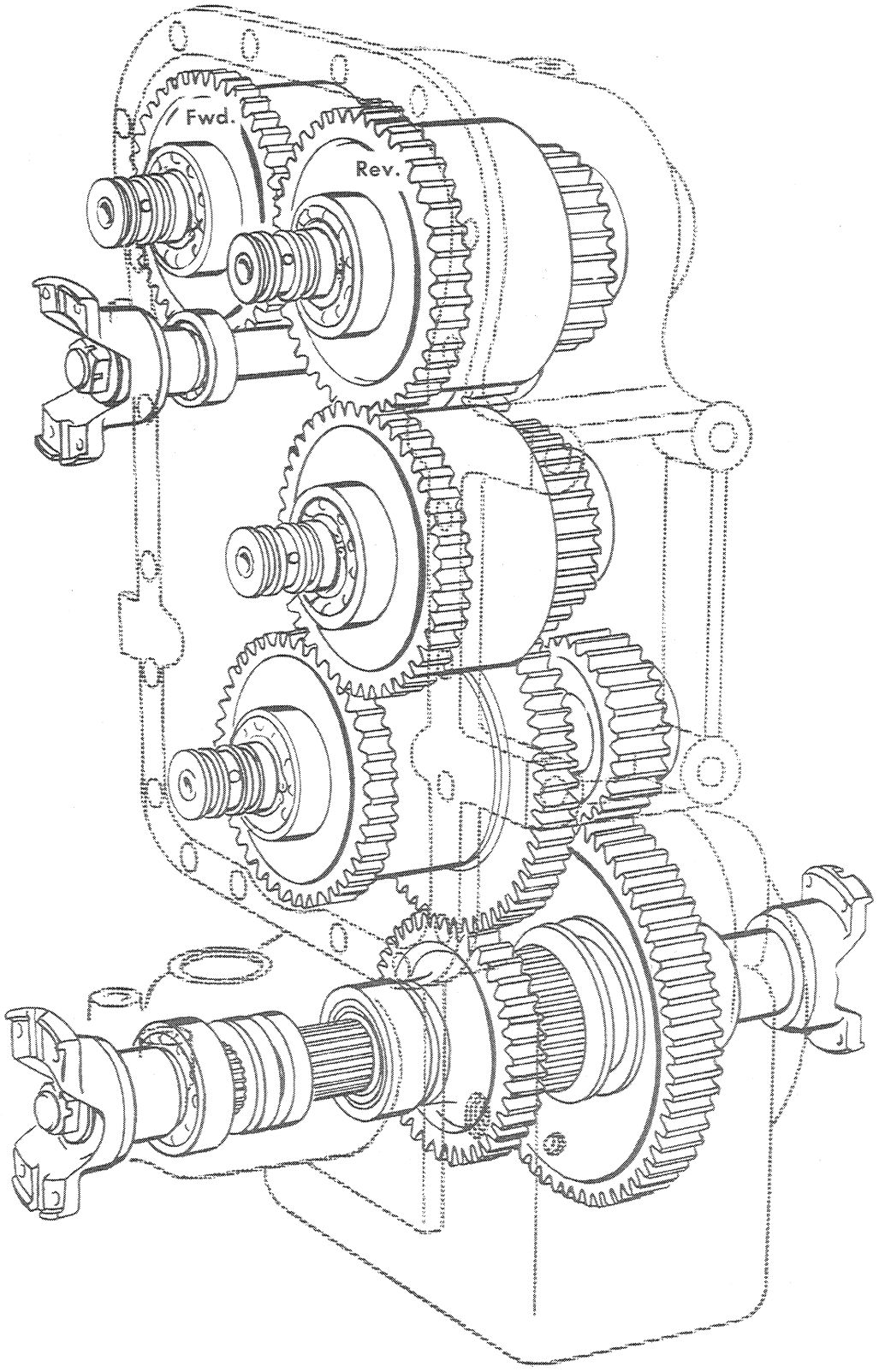

INTRODUCTION

The 2000 Series Transmission used in Case 4 Wheel Drive Unit Loaders is a constant mesh type with a power (hydraulic) shift in forward - reverse and in 2 speed ranges used in combination with 2 mechanical speed ranges.

The desired mechanical speed range can only be selected when the Loader is completely stopped because the operator must manually shift a collar on the transmission output shaft.

The hydraulic range can be selected while the Loader is moving because the operator simply dumps the oil in one clutch and directs pressurized oil to the other clutch - The forward clutch and the reverse clutch works the same as the hydraulic range clutches.

How It Works

(Refer to Figures Y-1 thru Y-5)

The Transmission consists of a Control Valve, Direction Clutches (forward and reverse), Power Range Clutches (high and low) and Manual Range (2 speed) output section. The Transmission also houses the rear axle shift out which disconnects the power train to the rear wheels for high speed transportation and economy of operation.

The Transmission Control Valve is located on the transmission cover. The function of the control valve is to direct pressurized oil to the direction clutches and power range clutches. The control valve also contains a clutch cut out spool that disengages the forward and reverse clutches when the left hand brake pedal is applied.

The Direction Clutches (Forward and Reverse) directs the power from the input shaft to the power range clutches.

The Power Range Clutches (High and Low) directs the power from the direction clutches to the manual range (2 speed) output section.

The Manual (2 Speed) Output Section directs the power from the direction clutches and power range clutches to the output shaft through either the large (low range) gear or small (high range) gear on the output shaft.

The Rear Axle Shift Out is located at the rear of the transmission and driven by the output shaft. The power train to the rear axle can be connected or disconnected by manually moving a splined collar. The rear axle shift out is used to disconnect the steering axle for highway travel. The rear axle shift out lever is located directly below the operator's seat.

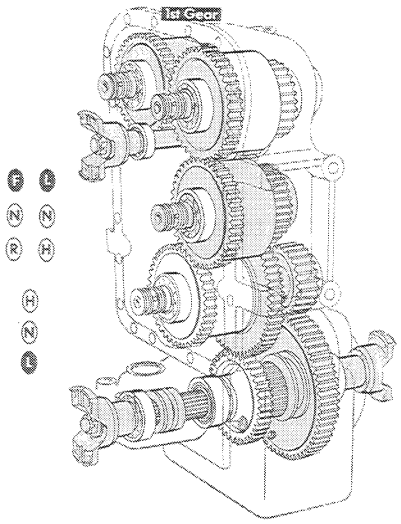

Figure Y-1

1st Gear

Mechanical Range (2 Speed) - Low
Hydraulic Range - Low
Direction - Forward

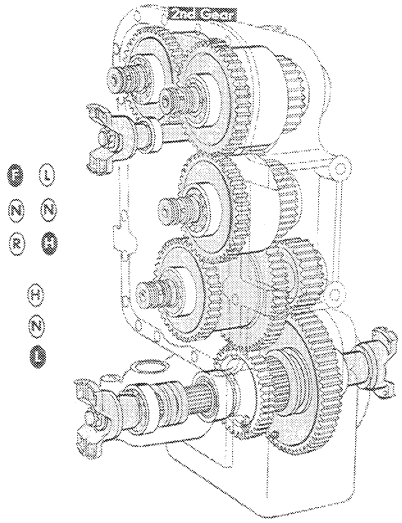

Figure Y-2

2nd Gear

Mechanical Range (2 Speed) - Low
Hydraulic Range - High
Direction - Forward

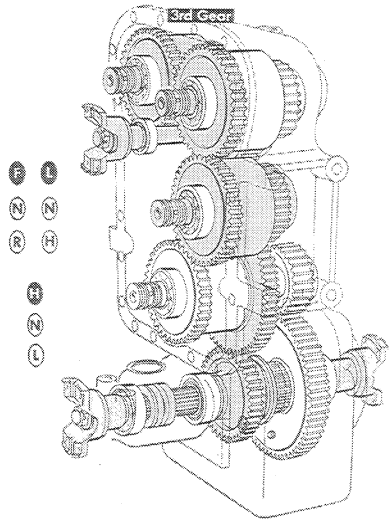

Figure Y-3

3rd Gear

Mechanical Range (2 Speed) - High
Hydraulic Range - Low
Direction - Forward

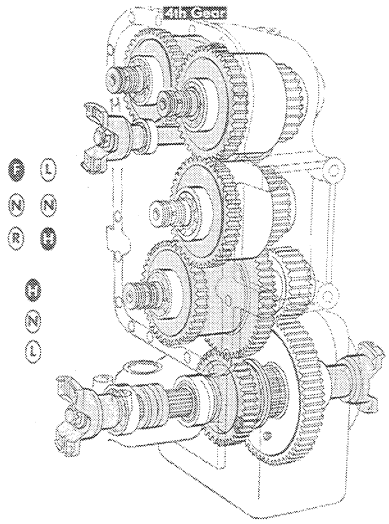

Figure Y-4

4th Gear

Mechanical Range (2 Speed) - High
Hydraulic Range - High
Direction - Forward

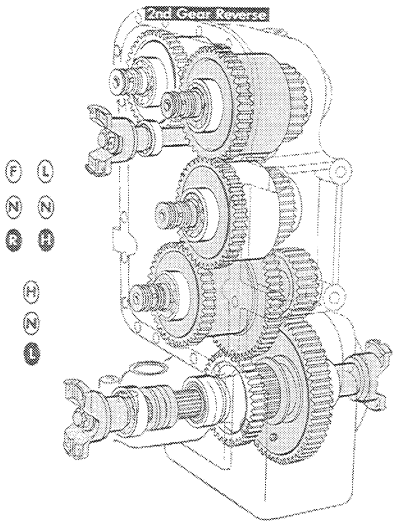

Figure Y-5

2nd Gear Reverse

Mechanical Range (2 Speed) - Low
Hydraulic Range - High
Direction - Reverse

2000 SERIES TRANSMISSION FLOW DIAGRAM

(Refer to Figures Y-6 thru Y-8)

Sump to Transmission Control Valve

Refer to explanation in Section X, C-270 Series Converter, Page X-4.

Transmission Control Valve to Clutches

The description of fluid flow from the control valve to each clutch is basically the same for all clutches, therefore only a general description is given below.

A. Pressurized flow from the control valve to clutch - the flow of fluid into the control valve inlet flows around the range spool, through the valve body and around the clutch cut-off valve to the direction spool.

When either spool is moved - a port is opened allowing pressurized fluid to flow through the port to the transmission cover to the clutch shaft. The pressurized fluid flows through a drilled passage in the shaft to the clutch piston, moving the piston and compressing the clutch driven plates against the drive plates.

When either spool is again moved the flow of pressurized fluid is blocked by the spool land and the port is open to sump. This allows the fluid behind the clutch piston to flow back thru the transmission cover passage and control valve to sump. With the port open the clutch piston return spring forces the clutch piston back into the released position.

B. Lubrication fluid flow from oil cooler to clutch - The transmission cooling and lubricating fluid flows from the oil cooler to the top of the transmission cover and is directed by passages in the cover to the center of each clutch shaft. Cooling and lubricating fluid enters at the cover end of the clutch shaft and is directed through drilled passages to the clutch bearings, hub, clutch plates and returns through small holes in the clutch drum back to sump.

FLOW DIAGRAM

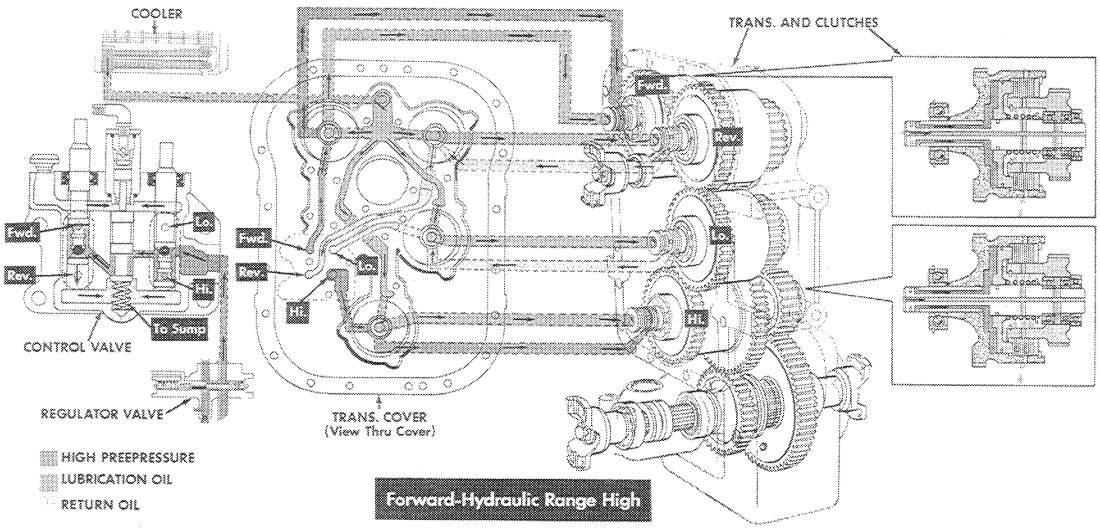

Figure Y-6

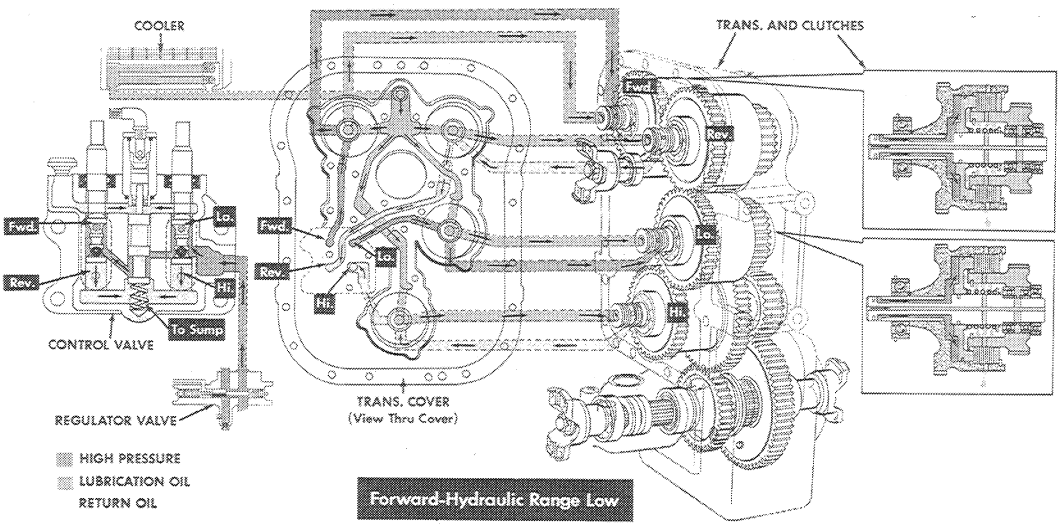

Figure Y-7

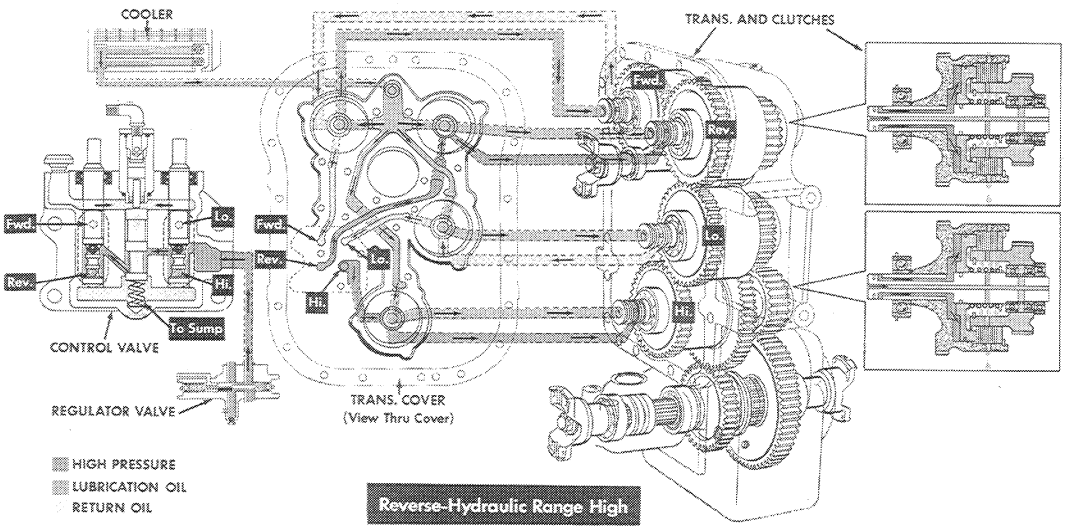

Figure Y-8

TRANSMISSION REMOVAL

(Refer to Figure Y-9)

Before removing the transmission from the Loader, the transmission and the area around the transmission must be steam cleaned to prevent dirt or foreign particles from entering the transmission or lines that are disconnected from the transmission. Also, drain the transmission sump.

To remove the transmission proceed as follows:

A. Remove the operator's seat and panels below the seat.

B. Disconnect the direction clutch linkage and power range linkage at the control valve and at the levers. See inset A.

C. Disconnect the manual range linkage and the parking brake linkage at the transmission.

D. Remove the seat mounting bracket and transmission control linkage.

E. Disconnect the foot throttle linkage and remove the operator's foot plate.

F. Disconnect the suction hose, return hose, cooler hose, pressure and brake line.

G. Disconnect the transmission input drive shaft and two output drive shafts.

H. Support the transmission with a hoist and remove the transmission mounting bracket bolts.

I. The transmission can now be lifted up through the operator's compartment and out of the Loader.

TRANSMISSION INSTALLATION

(Refer to Figure Y-9)

A. Lower the transmission down through the operator's compartment and install the bracket mounting bolts.

NOTE Torque the mounting bolts to 150 - 180 foot pounds.

B. Connect the transmission drive shafts.

C. Connect the suction hose, return hose, cooler hose, pressure hose and brake line.

D. Install the operator foot board and connect the foot throttle linkage.

E. Install the seat mounting bracket and transmission control valve linkage.

F. Connect the manual range and parking brake linkage.

G. Connect the direction clutch linkage and power range linkage to the control valve and levers. See inset A.

H. Install the panels around the operator's seat and the seat.

I. Fill the transmission up to the full level plug opening with Automatic Transmission Fluid Type "A" Oil.

REMOVAL AND INSTALLATION OF THE TRANSMISSION

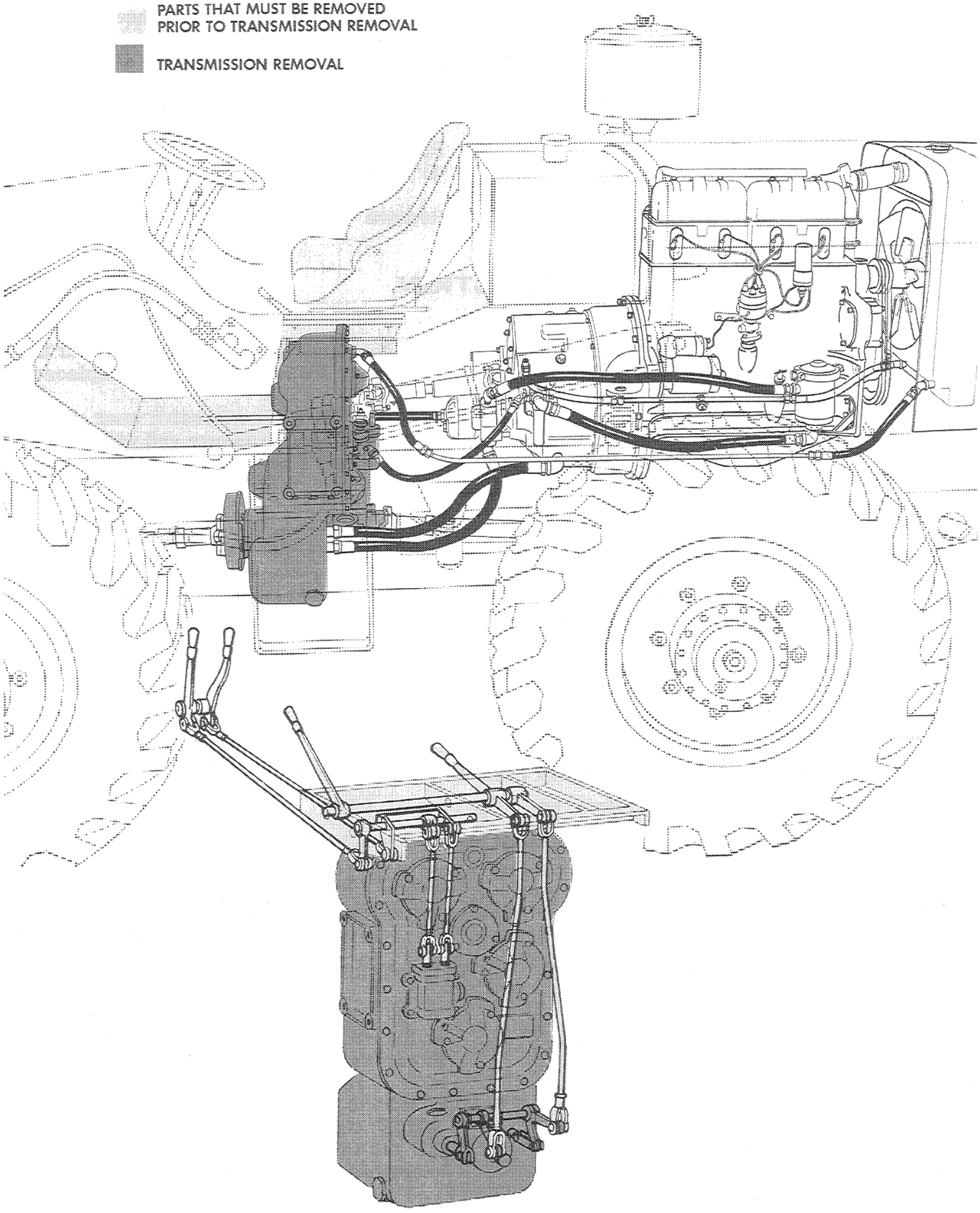

Figure Y-9

TRANSMISSION CONTROL VALVE DISASSEMBLY
(Refer to Figure Y-10)

A. Remove the detent springs, stop pins and balls.

B. Pull the range spool and direction spool out of the housing.
NOTE Mark the spools and housing so the spool can be installed in the same place.

C. Remove the housing breather.

D. Remove the piston housing plug, piston cup, cup spacer, push pin, piston housing and push pin oil seal.
NOTE The piston housing can also be removed as an assembly and then disassembled as described.

E. Remove and discard the piston housing "O" ring.

F. Remove the valve and valve spring.

INSPECTION

Housing - Inspect the housing bores for grooves, deep scratches and excessive wear. If the housing has damaged threads, cracks or scored bores, the housing must be replaced.

Control Spools - Inspect the spools for nicks, grooves scratches and excessive wear. Check to see if the spools fit their respective body bores with a slight hand pressure and with out excessive side clearance. If any one of the spools are damaged a new unit must be installed.

Valve Spring

Free Length	1.192
Wire Dia.	.086
Active Coils	6
Total Coils	8

38 to 47 pounds required to compress spring to a height of 3/4"

Oil Seals and "O" rings - Replace all oil seals and "O" rings any time the control valve is disassembled.

Clean the housing breather in fuel and let it drain.

TRANSMISSION CONTROL VALVE ASSEMBLY
(Refer to Figure Y-10)

Before assembling the control valve, coat all parts with Automatic Transmission Fluid Type "A" Oil to facilitate assembly.

A. Press in new spool oil seals.
NOTE Press seal in until flush with the housing, see inset A.

B. Install the direction and range spools into the housing.

C. Install the cut-off valve spring and valve.

D. Install a new push pin oil seal in the bottom end of the piston housing, see inset B.

E. Install a new piston housing "O" ring and the piston housing onto the control valve housing.

F. Install the push pin, piston cup spacer, new piston cup and piston housing plug with "O" ring into the piston housing.

G. Install the control valve housing breather.

H. Install the detent balls, spring stop pins and springs. Use a new housing gasket and mount the control valve to the transmission cover. Torque the mounting capscrews to 50 to 55 foot pounds.
NOTE Make sure the detent balls do not fall out while installing the control valve assembly to the transmission cover.

CONTROL VALVE DISASSEMBLY, INSPECTION AND ASSEMBLY

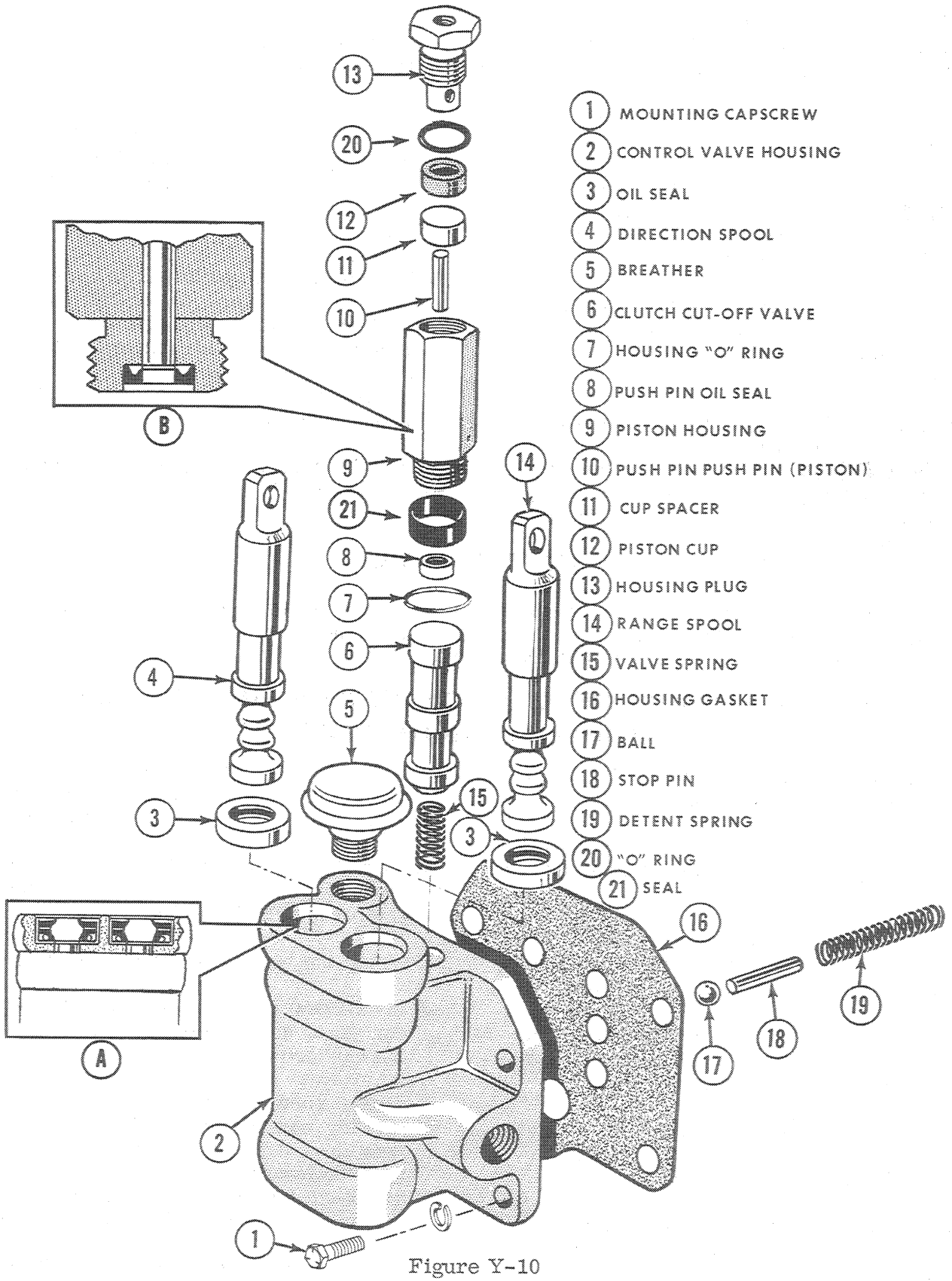

Figure Y-10

REMOVAL OF TRANSMISSION COVER AND CLUTCH PACKS
(Refer to Figure Y-11)

A. Remove the transmission clutch shaft bearing caps (3), control valve (4), input flange (7) and input bearing cap (9).

B. Remove the five bearing retainer snap rings (1).

C. Remove the transmission cover bolts (11).
NOTE The cover (12) is equipped with four holes for the use of Jack Screws to facilitate the cover removal.

D. With the cover removed the oil circuit plate (14) on the inside of the cover can be removed for cleaning of the oil passages.

E. Using an OTC No. 1002 puller, remove the input shaft bearing (17).
IMPORTANT To remove any one or all of the clutch packs, the sequence as described in paragraphs F, G and H must be followed.

F. To remove the Reverse clutch (18), pull the forward clutch (19) out about 5/8". This will allow the reverse clutch (18) to be pulled out past the forward clutch (19).

G. Tap the Forward clutch (19) back in. Then pull the low range clutch (20) out about 5/8". This will allow the forward clutch (19) to be pulled out past the low range clutch (20).

H. Tap the Low Range clutch (20) back in. Then pull the high range clutch (21) out about 5/8" so the low range clutch (20) can be pulled out past the high range clutch (21). With the low range clutch (20) removed, the high range clutch (21) can be pulled out of the transmission case.

I. Pull the input shaft (22) out of the transmission case (23).

INSPECTION

Inspect the cover and the oil circuit plate for nicks, burrs, grooves and cracks. With the oil circuit plate removed, thoroughly clean the oil passages in the cover. Small nicks or burrs can be removed with a hone or corcus cloth. Replace any damaged parts.

INSTALLATION OF CLUTCH PACKS AND COVER
(Refer to Figure Y-11)

A. Install input shaft assembly (22) into the transmission case (23) center bore.

B. Install the high range clutch assembly (21) into the lower bore in the transmission case.

C. Pull the high range clutch (21) out 5/8" and install the low range clutch (20). Tap the high range clutch (21) back down.

D. Pull the low range clutch (20) out 5/8" and install the forward clutch (19). Tap the low range clutch (20) back down.

E. Pull the forward clutch (19) out 5/8" and install the reverse clutch (18). Tap the forward clutch (19) back down.

F. Install the input shaft outer bearing (17) with the bearing locating ring toward the transmission cover (12).

G. Install the oil circuit plate (14) on the transmission cover (12). Torque the circuit plate mounting bolts (15) to 30 - 35 foot pounds.

H. Install the transmission cover gasket (16) and cover. Tighten the cover capscrews (11) evenly to 50 - 55 foot pounds.

I. Install the bearing retainer snap rings (1).

J. Install bearing cap gasket (2), "O" ring and cap (3) on each clutch shaft. Torque bearing capscrews to 30 - 35 foot pounds.

K. Press a new oil seal (8) into the input shaft bearing cap (9). NOTE: Lip of seal must face inward and seal must be pressed in 5/16" below face of flange, see inset, Figure Y-11. Install the bearing cap and tighten the capscrews to 50 - 55 foot pounds.

L. Install the input flange (7), "O" ring, washer (6), nut (5) and cotter pin.

REMOVAL, INSPECTION AND INSTALLATION OF THE TRANSMISSION COVER AND CLUTCH PACKS

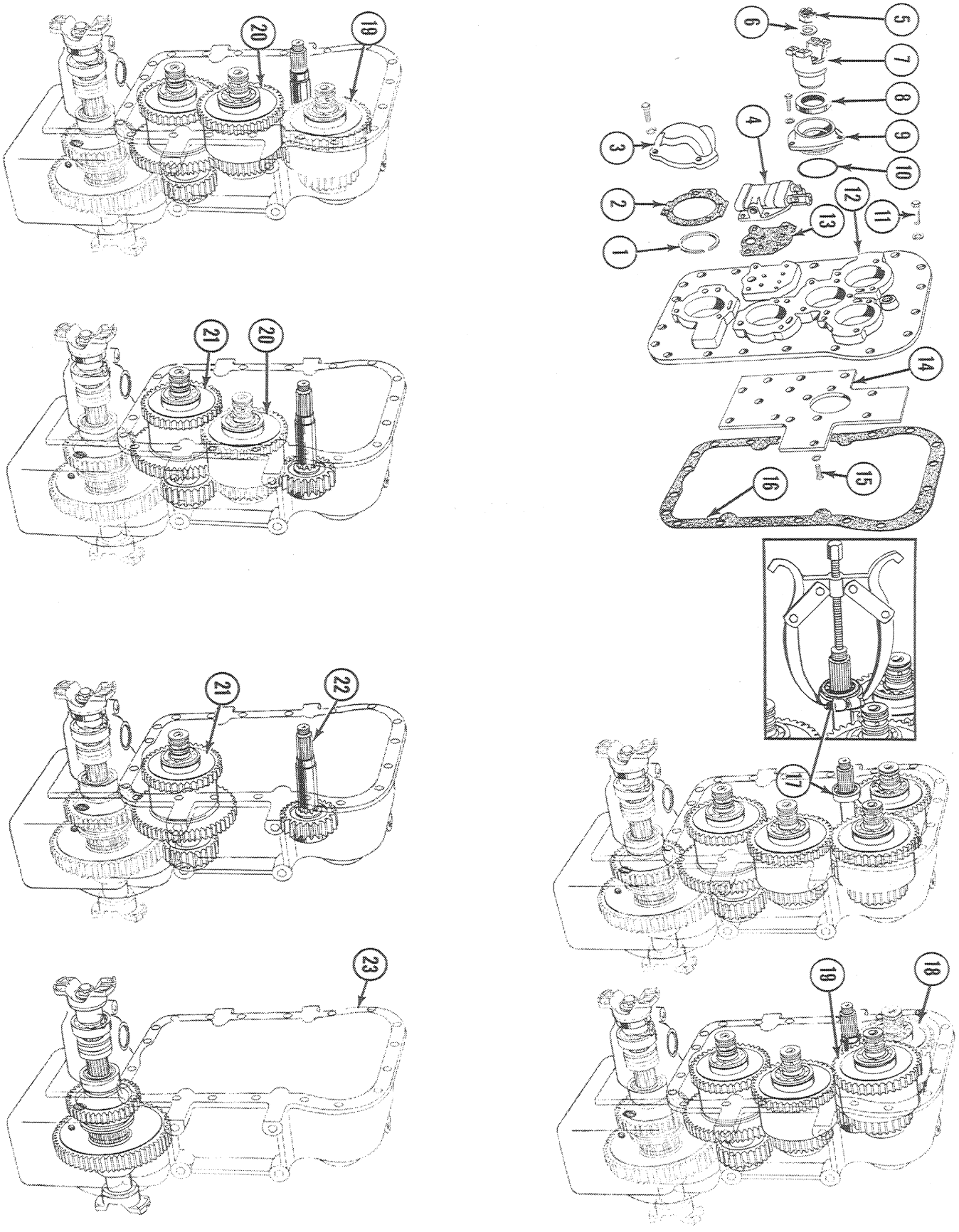

Figure Y-11

DISASSEMBLY OF THE TRANSMISSION CLUTCHES

(Refer to Figure Y-12)

The disassembly procedure for either the Forward, Reverse, Low or High clutches is the same unless otherwise noted.

IMPORTANT On the high range clutch only, the oil sealing rings must be removed before starting disassembly.

A. Remove the bearing retaining ring.

B. Using a puller, remove the clutch disc hub and front bearing. See inset A.

C. Using a puller, remove the clutch disc hub inner bearing. See inset B.

D. Remove the backing plate snap ring, backing plate and clutch plates.

E. To remove the clutch piston return spring a common piece of pipe having a 2-1/2" I.D. and 2-3/4" O.D. 5" long with a portion removed can be used with a puller to compress the spring so the snap ring can be removed. See inset C.

F. Remove the piston spring retainer washer, spring and piston.

G. Remove the oil sealing rings, bearing retaining snap ring and bearing from the opposite end of the shaft.

INSPECTION

A thorough visual examination of all parts should be made before assembly. Any parts that show excessive wear or damage must be replaced. Small nicks or burrs can be removed with a hone or crocus cloth.

Bearings - Inspect all ball bearings for smooth free action. If the bearing action is "sloppy" or "rough" or if the bearing is sticking replace the bearing.

Clutch Piston Spring must be carefully checked to assure full disengagement of the clutch plates. The clutch piston spring specifications are as follows:

Free Length ---------- 3-7/16"

Total Coils ---------- 6

Active Coils ---------- 4

103 to 127 pounds required to compress spring to a height of 1-5/8".

Replace all gaskets, oil seals, oil sealing rings and "O" rings during assembly.

The use of grease is recommended when positioning new gaskets in their respective locations. Also, coat all "O" rings and oil sealing rings with Automatic Transmission Fluid Type "A" to facilitate assembly.

DISASSEMBLY OF THE TRANSMISSION CLUTCHES

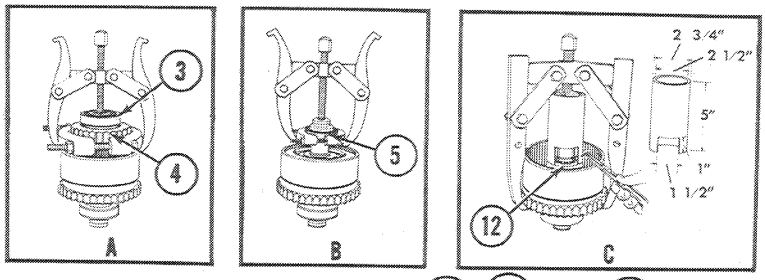

Forward - Reverse and Low Clutch

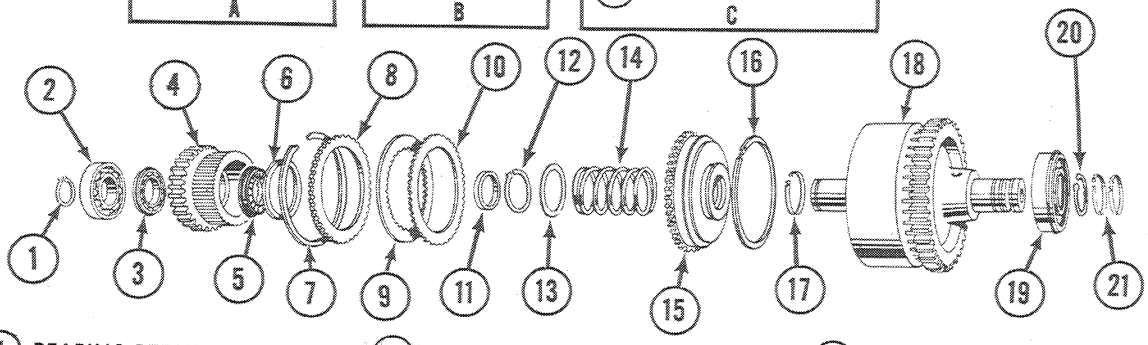

1. BEARING RETAINER SNAP RING
2. REAR BEARING
3. OUTER HUB BEARING
4. CLUTCH HUB
5. INNER HUB BEARING
6. OIL CONTROL RING
7. BACKING PLATE SNAP RING
8. BACKING PLATE
9. BRONZE CLUTCH DISC
10. STEEL CLUTCH DISC
11. BEARING SPACER
12. PISTON SPRING SNAP RING
13. PISTON SPRING RETAINER WASHER
14. PISTON SPRING
15. PISTON
16. OUTER PISTON SEALING RING
17. INNER PISTON SEALING RING
18. CLUTCH DRUM AND SHAFT
19. FRONT BEARING
20. BEARING RETAINER SNAP RING
21. OIL SEALING RINGS

High Range Clutch

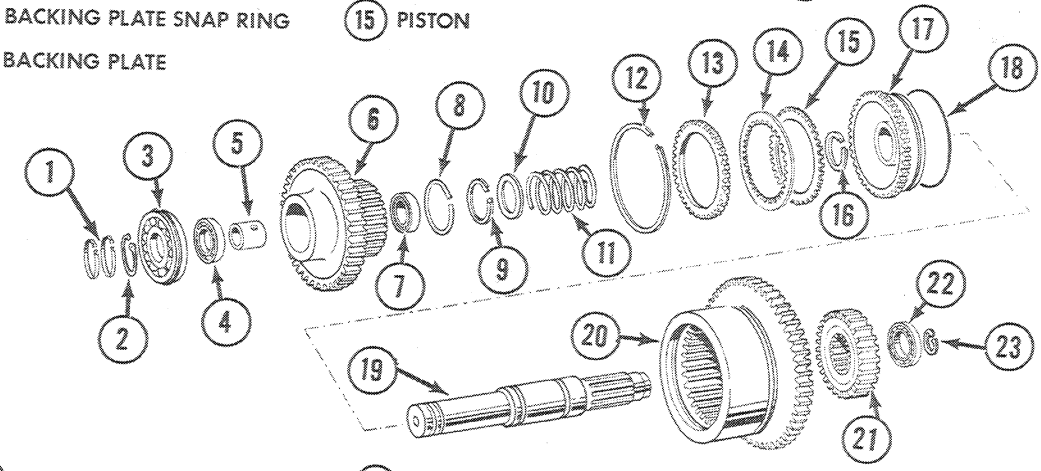

1. OIL SEALING RINGS
2. BEARING RETAINER SNAP RING
3. REAR BEARING
4. OUTER HUB BEARING
5. BEARING SPACER
6. CLUTCH HUB
7. INNER HUB BEARING
8. OIL CONTROL RING
9. PISTON SPRING SNAP RING
10. PISTON SPRING RETAINER WASHER
11. PISTON SPRING
12. BACKING PLATE SNAP RING
13. BACKING PLATE
14. BRONZE CLUTCH DISC
15. STEEL CLUTCH DISC
16. INNER PISTON SEALING RING
17. PISTON
18. OUTER PISTON SEALING RING
19. CLUTCH SHAFT
20. CLUTCH DRUM
21. HIGH GEAR
22. FRONT BEARING
23. BEARING RETAINER SNAP RING

Figure Y-12

ASSEMBLY OF THE TRANSMISSION CLUTCHES

(Refer to Figure Y-13)

Before reassembly, coat all parts with Automatic Transmission Fluid Type "A" Oil to facilitate assembly.

A. Install front bearing, snap ring and oil sealing rings onto the front of the clutch shaft, forward, reverse and low range clutches only.

B. Install a new oil sealing ring on the rear of the clutch shaft.

C. Install a new outer oil sealing ring on the clutch piston, and install the piston on the clutch shaft.

D. Install the clutch piston return spring, retainer washer and snap ring on the clutch shaft. **NOTE** Compress the spring using a puller and a pipe having a 2-1/2" I.D. and 2-3/4" O.D. 5" long with a portion removed to install the spring snap ring.

E. Install one bronze disc.

F. Install one steel disc with the dish towards the bronze disc. **NOTE** Each steel disc has two oil grooves 180° apart. These grooves must always be lined up.

G. Follow the sequence in paragraph E until five steel disc and six bronze discs have been installed.

H. Install the clutch backing plate and snap ring.
NOTE There should be about 1/8" between the last bronze disc and the backing plate.

I. Press the inner disc hub bearing onto the clutch shaft with the bearing ring towards the clutch plates.

J. **IMPORTANT** Install the bearing spacer with the oil groove toward the bearing.

K. Install the clutch disc hub into the clutch drum, aligning the internal teeth on the bronze disc with the spline in the clutch hub. **IMPORTANT** Make sure the clutch hub is fully engaged with all the bronze discs. On the reverse, forward and low clutches the distance between the bottom face of the clutch hub gear and the clutch backing plate should be 7/16". The high range clutch should be 5/32." A distance larger than those given will indicate the clutch hub is not engaged with all of the bronze discs.

L. Press the outer clutch hub bearing onto the clutch shaft and clutch hub. Make sure the bearing ring is away from the clutch hub.

M. Install the rear clutch hub bearing and snap ring.
NOTE On the high range clutch only, install the oil sealing rings on the shaft.

ASSEMBLY OF THE TRANSMISSION CLUTCHES

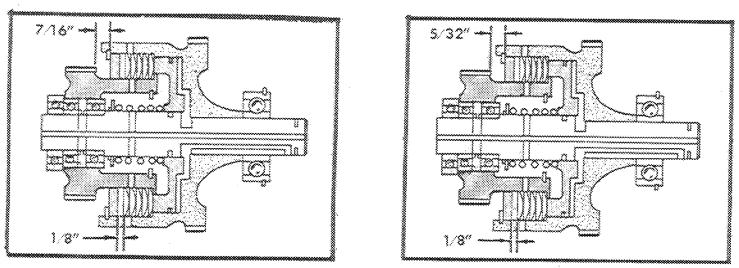

Forward - Reverse and Low Clutch

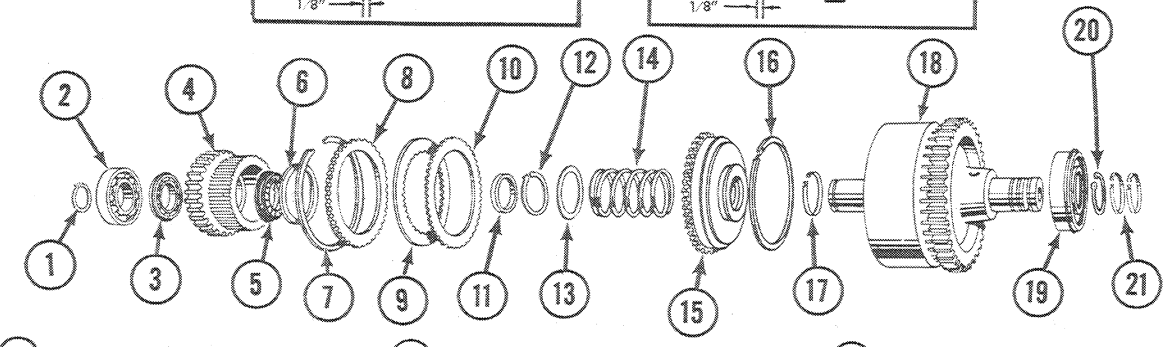

1. BEARING RETAINER SNAP RING
2. REAR BEARING
3. OUTER HUB BEARING
4. CLUTCH HUB
5. INNER HUB BEARING
6. OIL CONTROL RING
7. BACKING PLATE SNAP RING
8. BACKING PLATE
9. BRONZE CLUTCH DISC
10. STEEL CLUTCH DISC
11. BEARING SPACER
12. PISTON SPRING SNAP RING
13. PISTON SPRING RETAINER WASHER
14. PISTON SPRING
15. PISTON
16. OUTER PISTON SEALING RING
17. INNER PISTON SEALING RING
18. CLUTCH DRUM AND SHAFT
19. FRONT BEARING
20. BEARING RETAINER SNAP RING
21. OIL SEALING RINGS

High Range Clutch

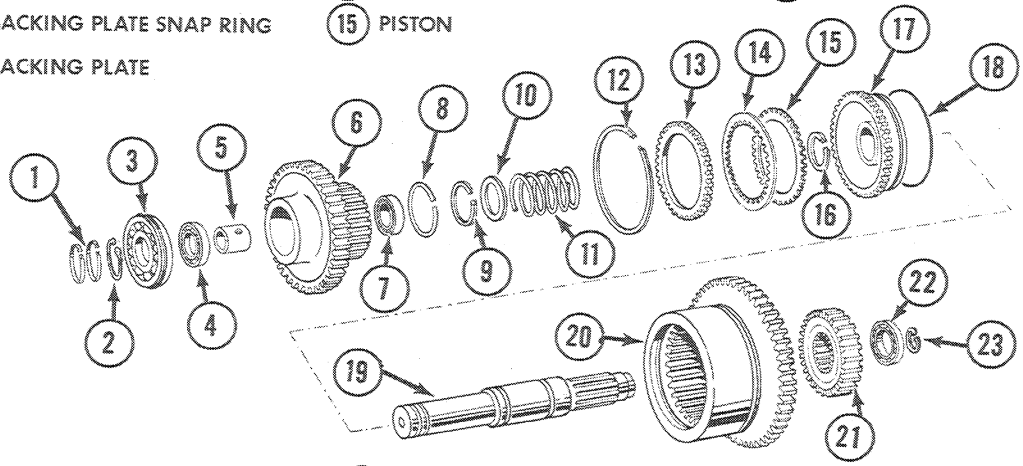

1. OIL SEALING RINGS
2. BEARING RETAINER SNAP RING
3. REAR BEARING
4. OUTER HUB BEARING
5. BEARING SPACER
6. CLUTCH HUB
7. INNER HUB BEARING
8. OIL CONTROL RING
9. PISTON SPRING SNAP RING
10. PISTON SPRING RETAINER WASHER
11. PISTON SPRING
12. BACKING PLATE SNAP RING
13. BACKING PLATE
14. BRONZE CLUTCH DISC
15. STEEL CLUTCH DISC
16. INNER PISTON SEALING RING
17. PISTON
18. OUTER PISTON SEALING RING
19. CLUTCH SHAFT
20. CLUTCH DRUM
21. HIGH GEAR
22. FRONT BEARING
23. BEARING RETAINER SNAP RING

Figure Y-13

DISASSEMBLY OF THE HIGH-LOW MANUAL RANGE

(Refer to Figure Y-14)

A. Remove the rear axle shift out retainer capscrews and axle shift out assembly.

B. Remove the brake drum flange nut, brake drum, brake band retaining springs and brake bands.

C. Remove the brake backing plate and bearing cap.

D. Remove the range shift rail detent plug, spring and ball.

E. Remove the range shift fork lock screw, rail and fork.

F. Place a block of wood on both sides of the low range gear between the gear and transmission case. Using a soft hammer on the brake end of the output shaft, drive the shaft out.

NOTE The high range rear will pass through the bore in the case, but caution must be used to prevent damage to either the case or gear teeth.

G. Lift the low range gear out of the case and using a puller remove the high range gear from the shaft.

H. If the bearings in the high and low range gears are to be replaced, press them out. Refer to Inspection.

I. Remove the oil sump screen and oil baffle plate.

INSPECTION

A thorough visual examination of all parts should be made before assembly. Any parts that show excessive wear or damage must be replaced. Small nicks or burrs can be removed with a hone or corcus cloth.

Ball Bearings - Inspect all ball bearings for smooth free action. If the bearing action is "sloppy" or "rough" or if the bearing is sticking replace the bearing.

Needle Bearings - Inspect the needle bearings for smooth free action. If the bearing action is rough or sticky or the bearing cage is bent causing the needles to stick the bearing must be replaced.

Gears and Shafts -Inspect all gears and shafts for wear, nicks, burrs and grooves. Any small nicks or burrs can be removed with a hone or corcus cloth. All parts having excessive wear or damage must be replaced.

"O" Rings, Oil Seals and Gaskets - Replace all "O" rings, oil seals and gaskets any time the transmission is disassembled.

The use of grease is recommended when positioning new gaskets in there respective locations. Also, coat all "O" rings and oil seals with Automatic Transmission Fluid Type "A" to facilitate assembly.

DISASSEMBLY OF HIGH-LOW MANUAL RANGE

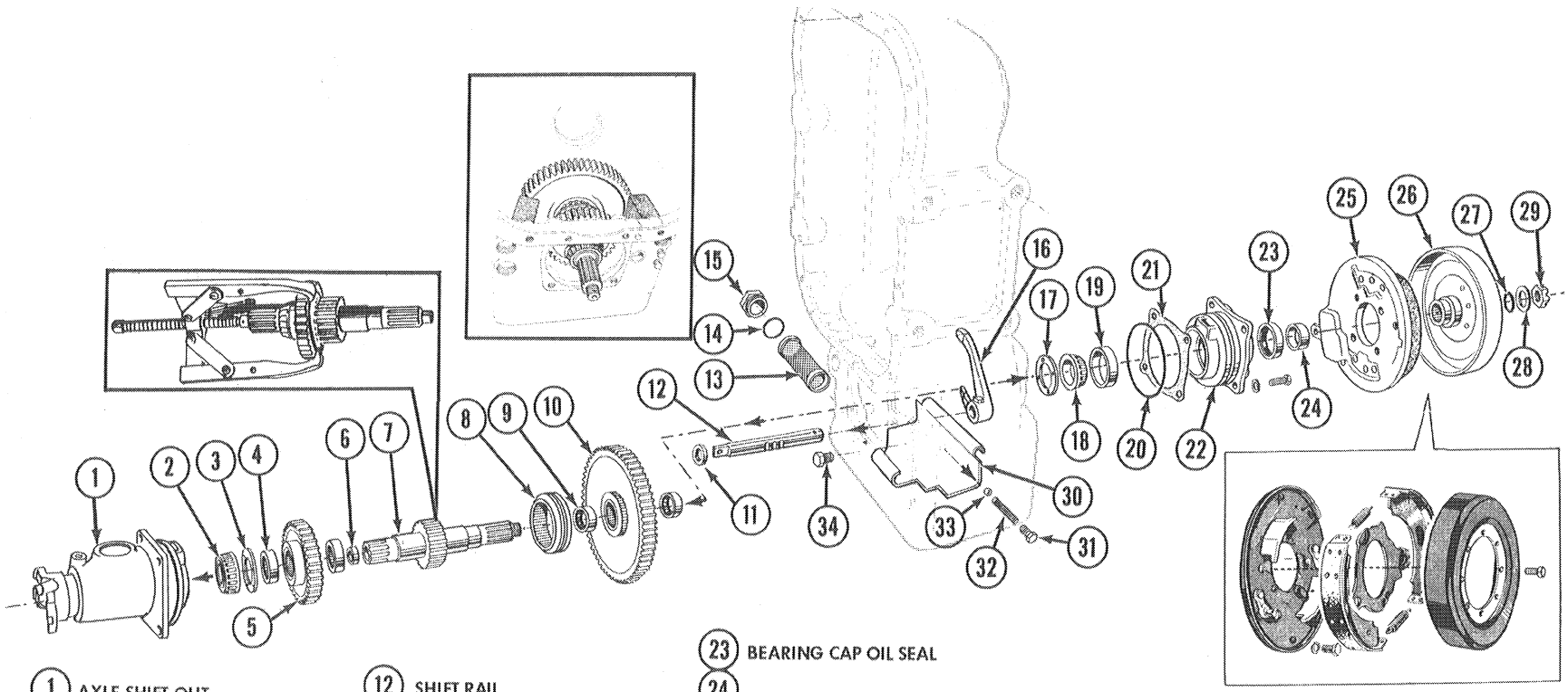

1. AXLE SHIFT OUT
2. FRONT BEARING CONE
3. THRUST WASHER
4. HIGH GEAR BEARINGS
5. HIGH GEAR
6. OUTPUT SHAFT BUSHING
7. OUTPUT SHAFT
8. RANGE SHIFT COLLAR
9. LOW GEAR BEARING
10. LOW GEAR
11. SHIFT RAIL OIL SEAL
12. SHIFT RAIL
13. SUMP SCREEN
14. "O" RING
15. SUMP SCREEN PLUG
16. RANGE SHIFT FORK
17. THRUST WASHER
18. REAR BEARING CONE
19. REAR BEARING CUP
20. BEARING CAP "O" RING
21. BEARING CAP GASKET
22. BEARING CAP
23. BEARING CAP OIL SEAL
24.
25. BRAKE BACKING PLATE
26. BRAKE DRUM
27. "O" RING
28. WASHER
29. BRAKE DRUM FLANGE NUT
30. OIL BAFFLE PLATE
31. DETENT PLUG
32. DETENT SPRING
33. DETENT BALL
34. BAFFLE PLATE CAPSCREW

Figure Y-14

ASSEMBLY OF HIGH-LOW MANUAL RANGE

(Refer to Figure Y-15)

A. Install the oil baffle and oil sump screen.

B. If new bearings are to be installed in the high and low range gears, proceed as follows:

   a. Press one bearing in the gear and the second bearing on top of first bearing. **NOTE** Bearings must be in the center of the gear and .015" to .025" from the face of the gear. Check both sides to be sure bearings are below the face of the gears.

C. Install the high range gear on the output shaft, with the clutch teeth next to the center hub of the shaft.

D. Install the high gear thrust washer and bearing. **NOTE** Press the bearing against the thrust washer until the washer will not turn.

E. Install the low range gear into the housing with the clutch teeth facing the center of the case.

F. Install the shifter hub on the shaft and install the assembly into the case and low range gear.

G. Install the rear axle shift out assembly. **NOTE** Make sure the oil hole is up (toward clutch packs). Tighten the axle shift out mounting capscrews to 50 - 55 foot pounds.

H. Install the low range gear thrust washer and bearing. **NOTE** Drive the bearing on the shaft until the thrust washer can not be turned.

I. Install the companion flange spacer.

J. Press a new oil seal into the front bearing cap. The lip of the seal must face inward and the seal pressed down until seated against the shoulder in the housing.

K. Install the bearing cap and shims on the housing with the oil hole up toward clutch packs. **NOTE** Shims may be added or omitted to obtain 6-10 inch pounds of torque on the bearing.

L. After proper pre-load has been obtained install the brake backing plate, band assembly and brake drum.

M. Install the flange "O" ring, washer, nut and cotter pin.

N. Install the range shift hub fork on the shift hub.

O. Install the range shift rail and secure with the lockscrew and lockwire.

P. Install detent ball, spring and plug.

ASSEMBLY OF HIGH-LOW MANUAL RANGE

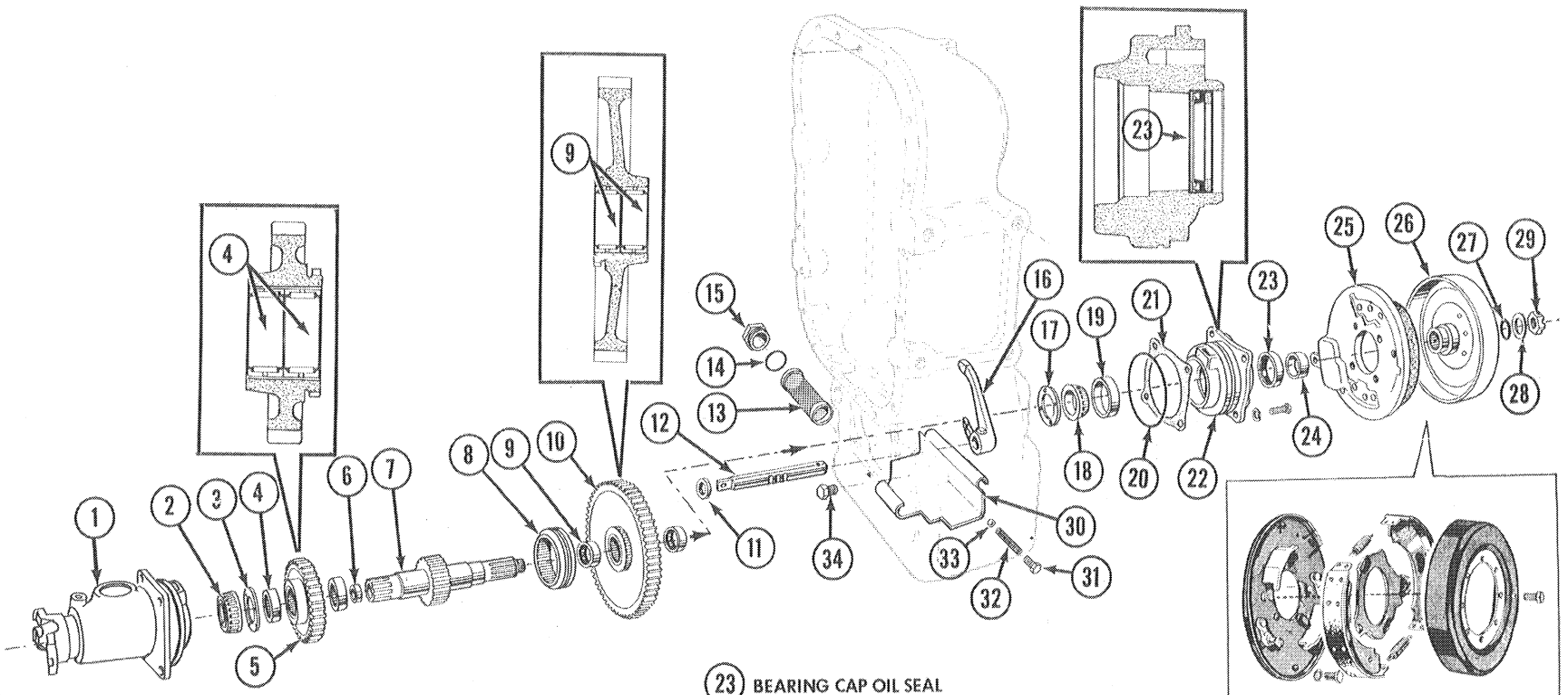

1. AXLE SHIFT OUT
2. FRONT BEARING CONE
3. THRUST WASHER
4. HIGH GEAR BEARINGS
5. HIGH GEAR
6. OUTPUT SHAFT BUSHING
7. OUTPUT SHAFT
8. RANGE SHIFT COLLAR
9. LOW GEAR BEARING
10. LOW GEAR
11. SHIFT RAIL OIL SEAL
12. SHIFT RAIL
13. SUMP SCREEN
14. "O" RING
15. SUMP SCREEN PLUG
16. RANGE SHIFT FORK
17. THRUST WASHER
18. REAR BEARING CONE
19. REAR BEARING CUP
20. BEARING CAP "O"RING
21. BEARING CAP GASKET
22. BEARING CAP
23. BEARING CAP OIL SEAL
24. OIL SEAL
25. BRAKE BACKING PLATE
26. BRAKE DRUM
27. "O" RING
28. WASHER
29. BRAKE DRUM FLANGE NUT
30. OIL BAFFLE PLATE
31. DETENT PLUG
32. DETENT SPRING
33. DETENT BALL
34. BAFFLE PLATE CAPSCREW

Figure Y-15

DISASSEMBLY OF REAR AXLE SHIFT OUT
(Refer to Figure Y-16)

Disassembly of the axle shift out can either be done at the time of removal from the transmission case or as a seperate unit.

A. Remove the flange nut, cotter pin and nut.

B. Remove the washer, "O" ring and flange.

C. Remove the housing plug so the shift rail lock screw can be removed.

D. Pull the shift rail out of the shift fork and housing.

E. Pull the rear bearing cup out of the housing and remove the bearing locating snap ring.

F. Remove the shift hub and shift fork.

G. Press out the output shaft.

H. Remove the rear bearing snap ring and bearing.

I. Pull the flange oil seal out of the housing.

INSPECTION

Inspect the shaft and hub for excessive wear or damage. Check the splines on both the shaft and hub for damage that may cause binding of the hub. Replace any damaged parts.

Bearings

Inspect the bearings for nicks, burrs and grooves that may cause binding of the balls and damage to the inner and outer races of the bearing. If either the balls or races are damaged, the bearing must be replaced.

Detent Spring

Check the detent spring as listed below:

Wire Diameter ---------- .067

Active Coils ---------- 10

Free Length ---------- 1-1/32"

20 to 30 pounds required to compress spring to height of 13/16"

ASSEMBLY OF REAR AXLE SHIFT OUT
(Refer to Figure Y-16)

Before reassembly of the axle shift out coat all parts with Automatic Transmission Fluid Type "A".

A. Press a new oil seal into the housing with the lip in. **NOTE** Seal must be 5/16" in from outer end of housing. See inset A.

B. Install the rear bearing and snap ring.

C. Press the output shaft into the rear bearing until the bearing is against the shoulder on the shaft.

D. Install the shift hub and shift fork onto the shaft.

E. Press a new shift rail oil seal into the housing with the lip in and seal flush with housing.

F. Install the shift rail, lock screw and plug.

G. Install the detent ball, spring and plug.

H. Install the output shaft flange, "O" ring, washer, nut and cotter pin.

DISASSEMBLY, INSPECTION AND ASSEMBLY OF REAR AXLE SHIFT OUT

1. COTTER PIN
2. COTTER PIN FLANGE NUT
3. WASHER
4. "O" RING
5. FLANGE
6. FLANGE OIL SEAL
7. SHIFT RAIL OIL SEAL
8. SHIFT RAIL
9. SHIFT RAIL DETENT BALL
10. AXLE SHIFT OUT HOUSING
11. SHIFT RAIL DETENT SPRING
12. SHIFT FORK
13. HOUSING PLUG
14. SHIFT FORK LOCK SCREW
15. HOUSING "O" RING
16. REAR BEARING
17. SNAP RING
18. OUTPUT SHAFT
19. SHIFT COLLAR
20. SNAP RING
21. FRONT BEARING CUP

Figure Y-16

TRANSMISSION PRESSURE CHECK

The check point for checking the transmission clutch pressure is located on the Transmission - Converter Regulator Valve.

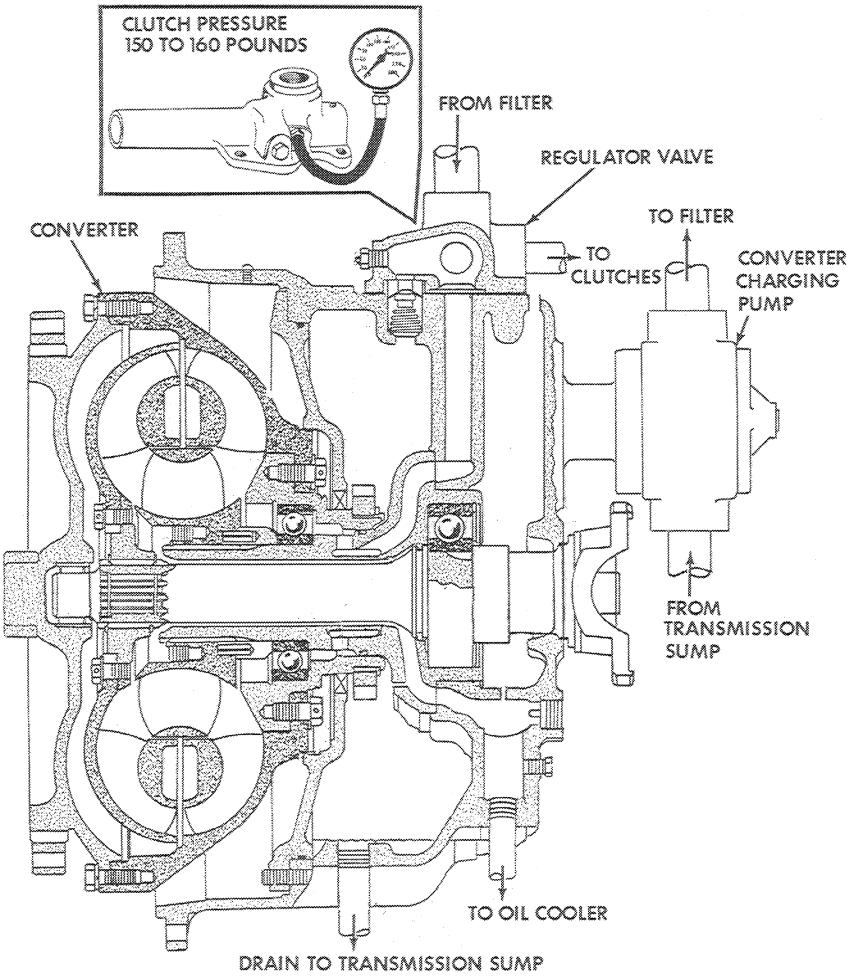

Figure Y-17

When making the transmission pressure check, the oil level in the transmission must be up to the "Full" level plug with the engine operating. Refer to Section X, Page X-6, Figure X-3. The oil must also be at operating temperature as indicated on the instrument panel gauge (center green zone or 200° F). The A20172 Gauge for checking transmission pressure (Figure Y-17) can be purchased from the J. I. Case Co., Central Parts Div., Racine, Wisconsin.

Clutch Pressure ---------- 150 - 200 PSI @ 1500 Engine RPM

There must always be 150 - 200 PSI at the clutch check point whenever the engine is running - even with all clutches in neutral.

The pressure to each individual clutch can be checked by engaging the clutch and checking the pressure - it must be 150 to 200 PSI @ 1500 Engine RPM.

If any one clutch registers less than 150 PSI - it indicates possible leakage somewhere in that particular clutch.

If all clutches register less than 150 PSI check the transmission - converter regulator valve - as it is the only pressure regulator valve that influences all clutches. (Refer to Section X for servicing regulator valve).

NOTE: The J. I. Case Company reserves the right to make improvements in design or changes in specifications at any time without incurring any obligation to install them on units previously sold.

SECTION

T

SERVICING THE SINGLE - REDUCTION (A15-3200 AND A30-3200 SERIES) DIFFERENTIALS

●

UNIVERSAL JOINTS AND DRIVE SHAFTS

ON

CASE 4 WHEEL DRIVE UNIT LOADERS

PRINTED IN U.S.A.

TABLE OF CONTENTS

INTRODUCTION - (General)---------- T-3 thru T-4

THE DIFFERENTIAL ---------- T-5 thru T-8

General ---------- T-5
How It Works ---------- T-6
Identification (Differentials) ---------- T-7
Identification (Axle and Differential) ---------- T-8

DIFFERENTIAL (Removal and Disassembly)---------- T-9 thru T-17

Removal ---------- T-9 thru T-11
Disassembly of the Differential Carrier ---------- T-12 thru T-13
Disassembly of the Differential Case and Gear Assembly ---------- T-14
Removal and Disassembly of the Pinion and Bearing Cage-------- T-15 thur T-16

DIFFERENTIAL RING GEAR REMOVAL AND REPLACEMENT ---------- T-17

DIFFERENTIAL - (Inspection) ---------- T-18 thru T-19

DIFFERENTIAL (Re-Assembly and Installation) ---------- T-20 thru T-28

Assembly of the Pinion and Cage Assembly ---------- T-20 thru T-22
Assembly of the Differential Pinions, Side Gears and Case Halves T-23 thru T-24
Installation of the Differential and Gear Assembly ---------- T-25
Adjusting the Differential Bearing Pre-Load ---------- T-26
Correct Tooth Contact ---------- T-27
Installation of the Differential Assembly Into The Loader Axle Housing ---------- T-28
Installation of the Axle Shafts ---------- T-29

SERVICE SUGGESTIONS ---------- T-30

DRIVE SHAFTS - (Removal and Disassembly) ---------- T-31 thru T-32

Removal of the Drive Shaft and Universal Joints ---------- T-31
Disassembly of the Universal Joints and Drive Shaft ---------- T-32

DRIVE SHAFT - (Inspection) ---------- T-33

DRIVE SHAFT - (Re-Assembly and Installation) ---------- T-34 thru T-35

Assembly of the Drive Shaft and Universal Joints ---------- T-34
Installation of the Drive Shaft and Universal Joints ---------- T-35

SERVICE SUGGESTIONS ---------- T-36

INTRODUCTION
General

Case Four Wheel Drive Unit Loaders are equipped with Planetary Axles which provide two speed reductions between the transmission and wheels. These Planetary Axles incorporate a single reduction bevel hypoid gear differential in the center of the axle, and single reduction planetary design spur gearing built into the wheel hubs.

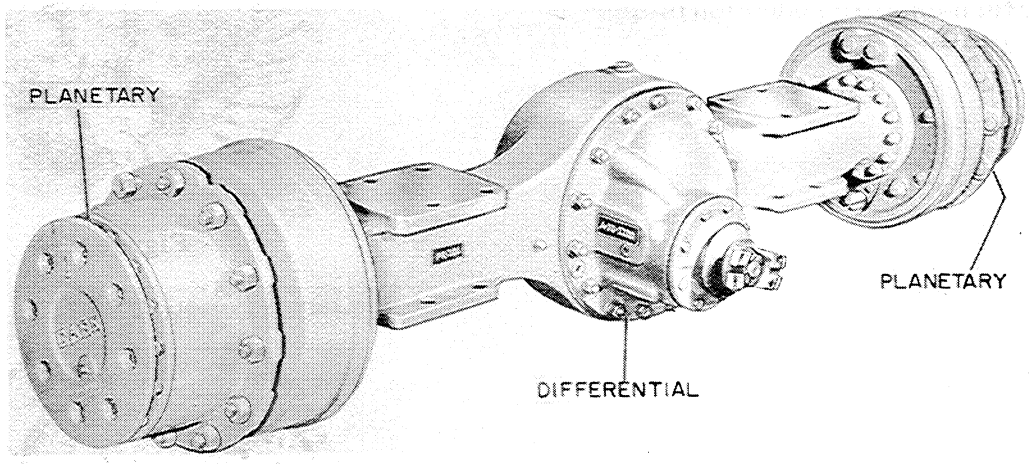

Figure T-1

This Section (T) of this Service Manual covers only the Servicing of the Single Reduction Bevel Hypoid Gear Differential. Section U covers the Servicing of the Planetary Drive.

WHY PLANETARY DRIVE'S?

To fully understand the purpose and function of the planetary axle system, we must first look at its position and function in the powertrain.

The Torque (or turning ability) of the engine must be delivered to the point where it will be used - the drive wheels.

In order to use a compact efficient engine and power train it will be necessary to multiply this engine torque several times before it gets to the drive wheels. This torque multiplication takes place in the torque converter, transmission and planetary axles.

Let's take a quick look at these torque multipliers.

Converter - The Converter, Figure T-2, multiplies torque hydraulically - it can increase engine torque as much as 3-1/2 times. Refer to Section S for a complete discussion of the torque converter.

Transmission - The Transmission, Figure T-2, increases torque through reduction gearing. Whenever gears are used to increase torque - speed is decreased proportionally to the torque increase. The maximum gear reduction of the transmission in low gear is approximately 5.3 to 1.

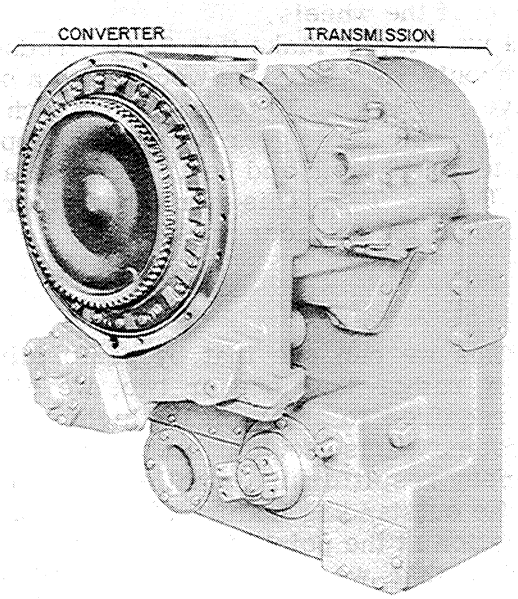

Figure T-2

Differential - The Differential, Figure T-3, also increases torque through gear reduction. This further gear reduction is approximately 5.3 to 1.

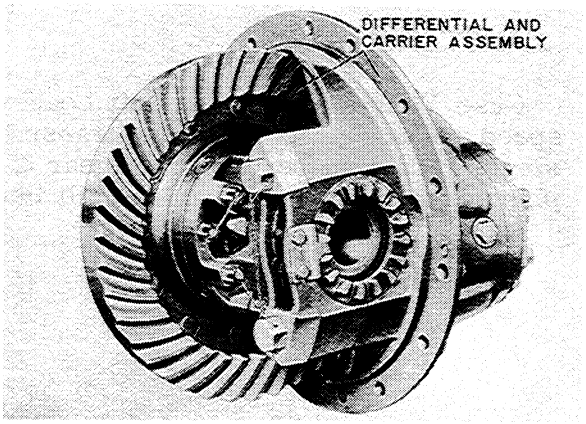

Figure T-3

Planetaries - The Planetaries, Figure T-4, also use gear reduction to multiply torque. This reduction is approximately 3.3 to 1.

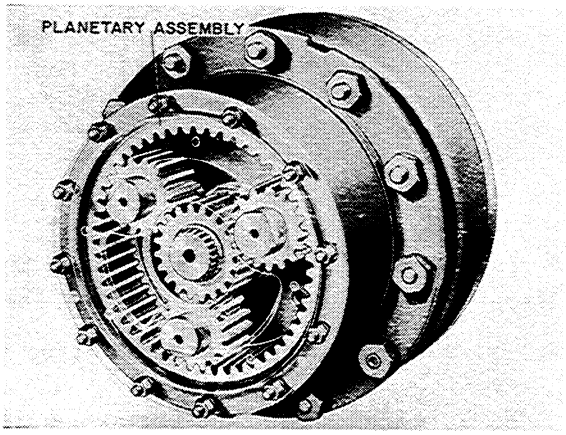

Figure T-4

The total gear reduction to obtain maximum torque at the drive wheels is 92 to 1. This means that 92 revolutions of the transmission input shaft results in 1 revolution of the wheels.

If we were to make this 92 to 1 reduction with only two gears we would have a small drive gear having 10 teeth and a 4 inch diameter - the large gear would have approximately 940 teeth and be 12 feet in diameter, Figure T-5. This would be rather impractical for a loader application.

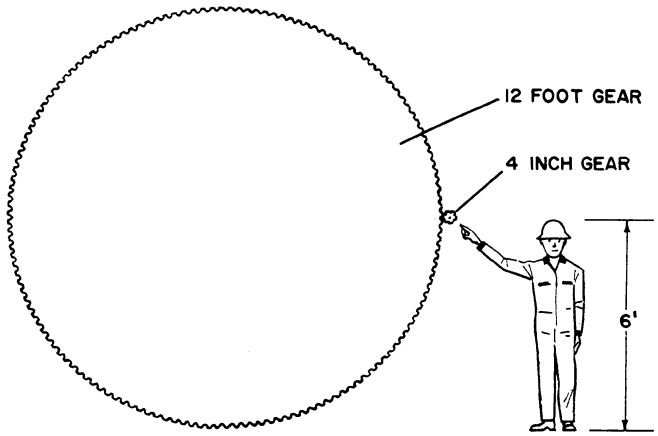

Figure T-5

Thus we can see that by performing this torque multiplication at four points in the power train rather than one or two, we eliminate the use of large cumbersome parts which would be required to transmit the higher torque to its point of application. Use of these large cumbersome parts would unnecessarily increase the weight the engine would have to haul around, thereby resulting in a smaller portion of the engine power being used for moving the pay load.

The outstanding feature of the planetary axle is its ability to perform the final torque multiplication at the point which the torque is applied - the drive wheels.

Now that we have some idea as to the purpose of the planetary axle system, let's take a closer look at just what part the differential has in this system.

THE DIFFERENTIAL
General

The function of the differential in the planetary axle system is to:
1. Multiply torque thru gear reduction as discussed on Pages T-3 and T-4.
2. Permit one driving member to rotate slower or faster than the other and at the same time move its share of the load as discussed on Page 5 and 6.

Before we discuss how the differential works let's first take a look at the general location of the differential and its parts.

The Differential and carrier are rigidly mounted on the <u>forward</u> side of the rear (steering)axle housing and on the <u>rearward</u> side of the front (rigid) axle housing.The differentials are connected, by a flanged yoke to the universal joint on the one end of the drive shaft. The other end of the drive shaft is connected to the transmiss - ion output.

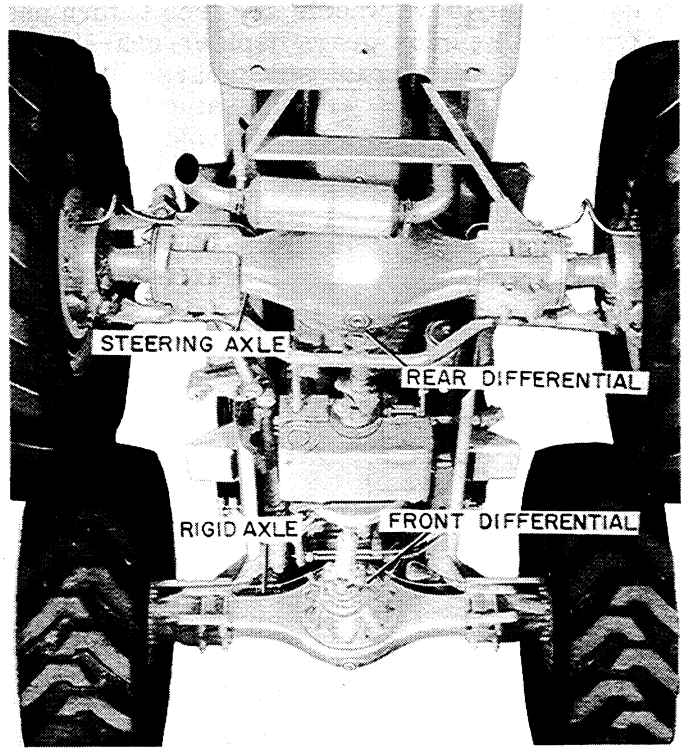

Figure T-6

<u>Differential Carrier</u> - The differential carrier, Figure T-7, supports the entire differential assembly in the axle housing.

<u>Differential Assembly</u>

Bevel Pinion and Ring Gear - form a hypoid differential because the center of the pinion is offset (below) from the center of the ring gear. Hypoid gearing provides a compact differential because of the greater tooth contact available in a small area.

Side Gears - drive the axle shafts.

Trunion (Spider) - transmitts power from ring gear in equal proportions to side gears and axle shafts.

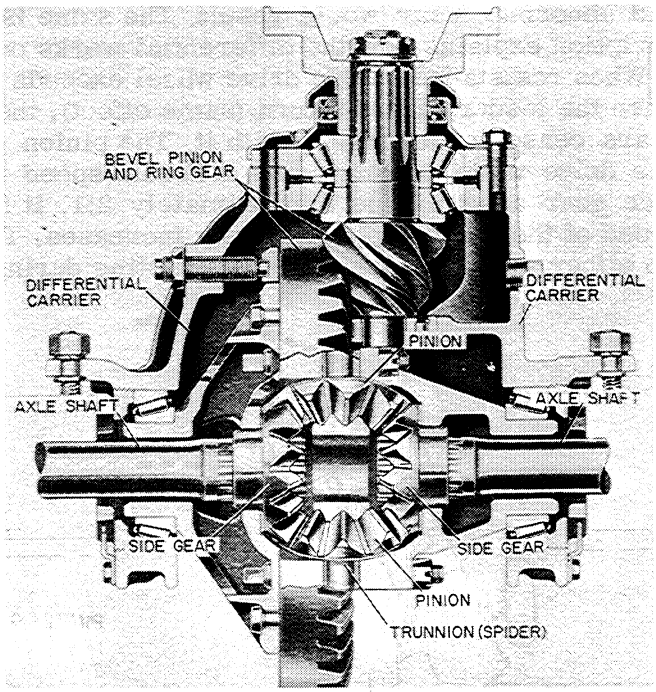

Figure T-7

THE DIFFERENTIAL - How It Works

The following discussion explains "how the differential works when:

The Loader Is Operating Straight Ahead with Adequate Traction (all driving members turning as a single unit.)

The Loader Either Turning or one Wheel is Slipping (one driving member rotating faster than the other).

Straight Ahead Operation

When all four drive wheels are free to turn under equal loads, the differential ring gear and the four small pinion gears (spider gears) act as one rigid unit, transmitting torque to both of the splined differential side gears. The side gears, being splined to the axle shafts, then drive each rear wheel with the same amount of torque at identical rates of speed. In this instance the spider gears do not rotate on their axes, therefore, the side gears rotate at the same RPM as the ring gear.

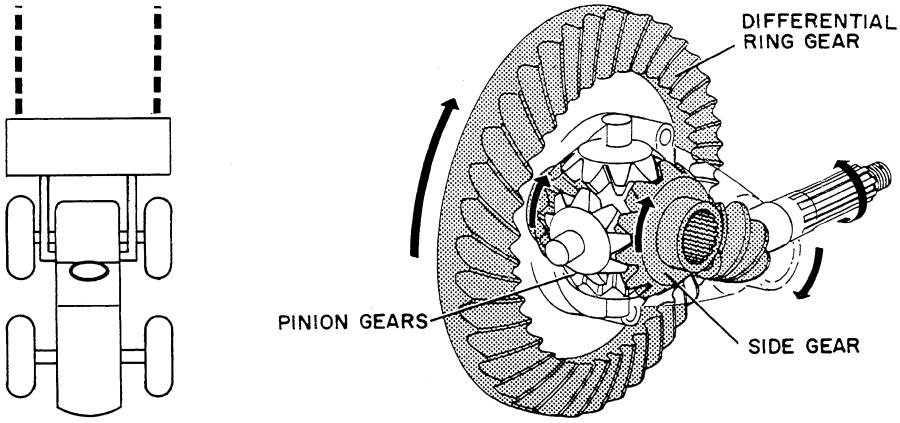

Figure T-8

Wheel Slippage Or Loader Turning

It is quite abvious in Figure T-9, illustration A, that when the loader is making a turn, the outside wheels turn further and faster than the inside wheels. If a differential were not provided to permit this unequal travel and at the same time equalize the pull, excessive strain and abnormal wear would result. The same is true when one wheel slips - The following description explains how the differential works on a "turn" or "slip."

When resistance on one drive wheel exceeds the resistance on the other (wheel slippage) or when the loader makes a turn (same effect), the ring gear continues to revolve, but the pinion gears cease to act rigidly with it. The pinion gears now rotate on their own axes, permitting one drive wheel to rotate at a different speed than the other. Since the ratio of the pinion and side gear assembly is approximately 2:1, it follows that as one drive wheel slows down, the speed of the other proportionately increases. This prohibits the application of a tortional load, (to either axle) greater than that existing during normal operation.

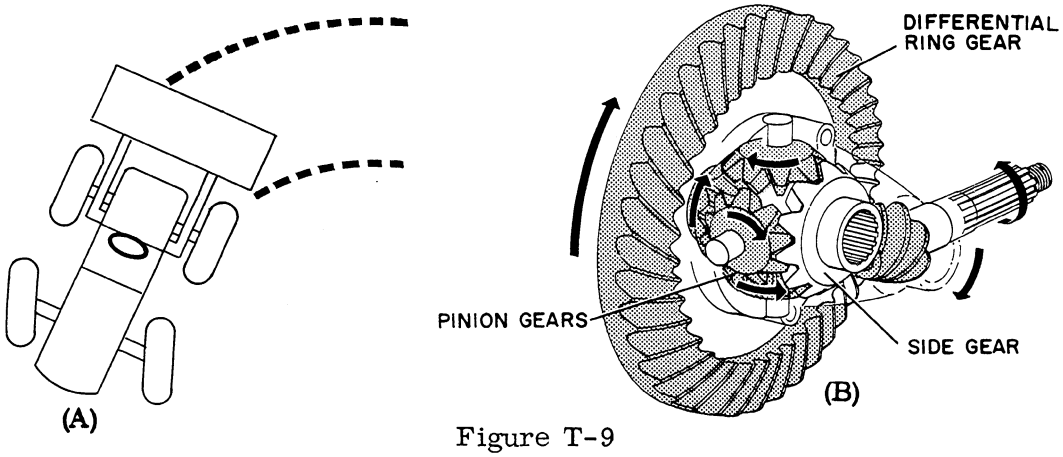

Figure T-9

DIFFERENTIAL IDENTIFICATION

Case Four Wheel Drive Unit Loaders use different sizes of differentials. To identify the different size differentials, see below:

Differential Identification

The Differential model can be identified by either an identification plate attached to the differential carrier, Figure T-11, or the model number stamped into the differential carrier, Figure T-10. The identification is always in the area of the differential filler plug boss.

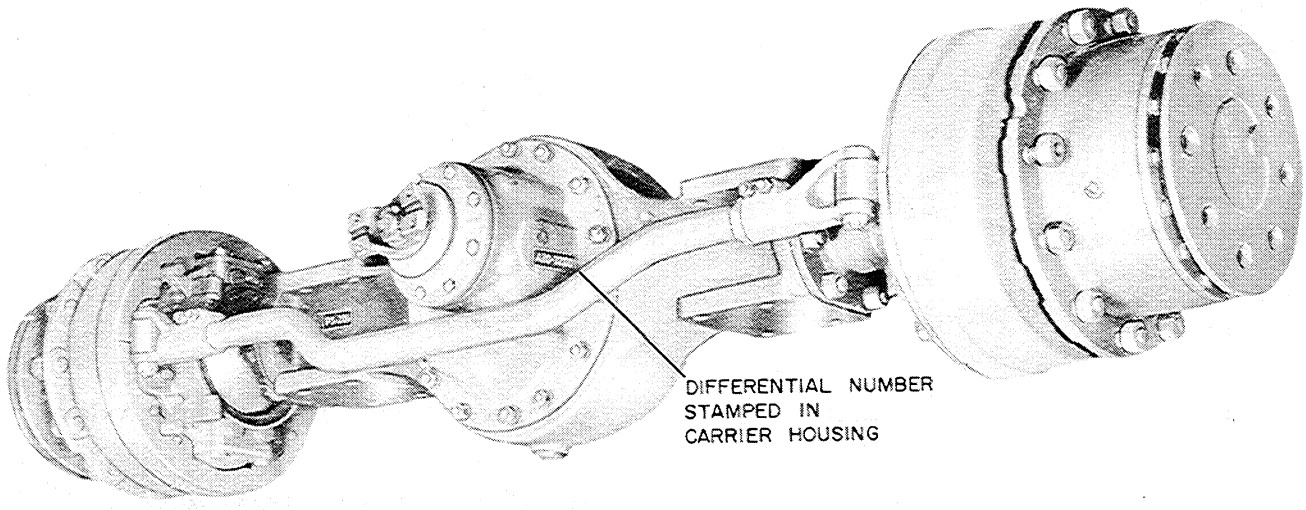

Figure T-10. Differential Identification Stamp

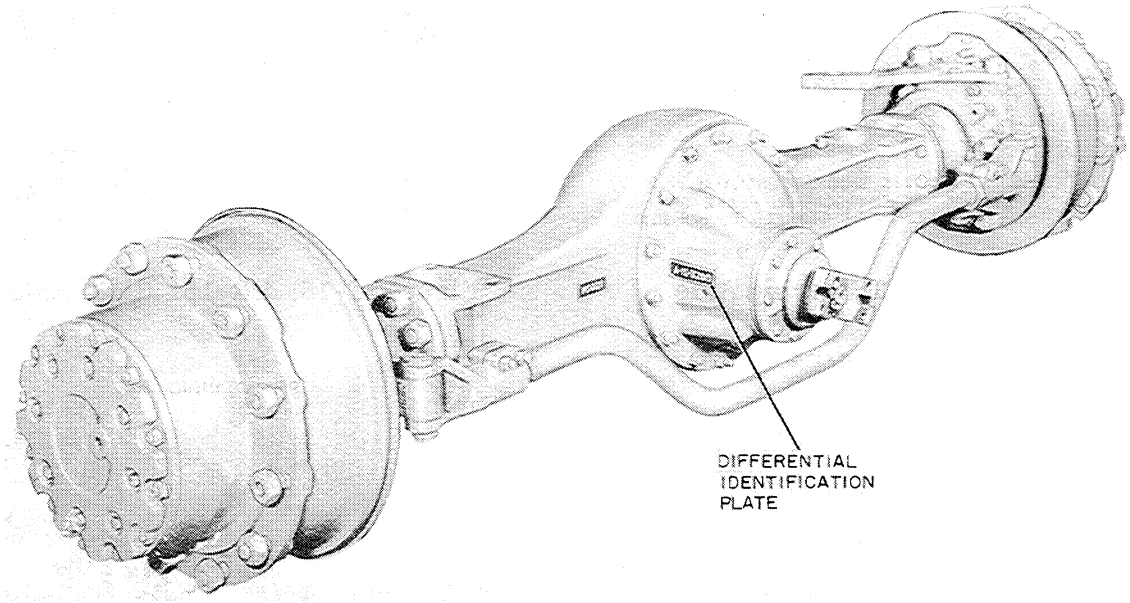

Figure T-11. Differential Identification Plate

NOTE: The following pages cover the service information for the A15 - 3200 and A30 - 3200 Series differentials used with the PR & PS 100 Series, 150 Series and 200 Series Axles - The service information for both series differentials is the same unless otherwise noted.

Identification of Axles and Differentials

Case Four Wheel Drive Unit Loaders use several different models of axles. To identify these different models of axles see below:

Axle Identification

The axle model can be identified by either an identification plate attached to the axle housing, (late production axles only) or by their differential number and appearance of the planetary cover. Refer to Figures T-12 thru T-17.

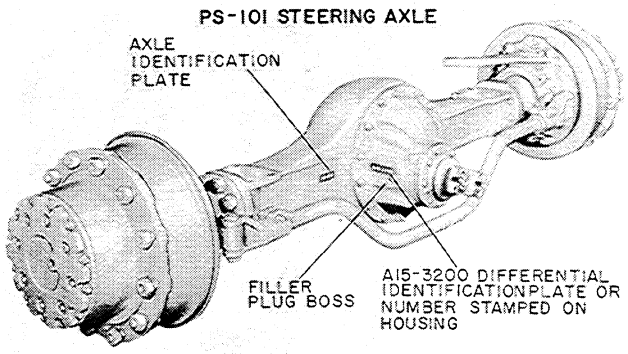

Figure T-12. PS-101 Steering Axle

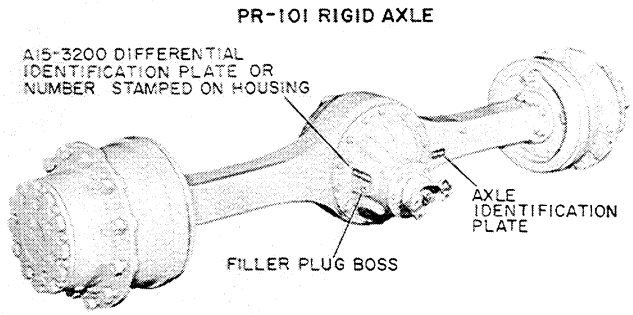

Figure T-13. PR-101 Rigid Axle

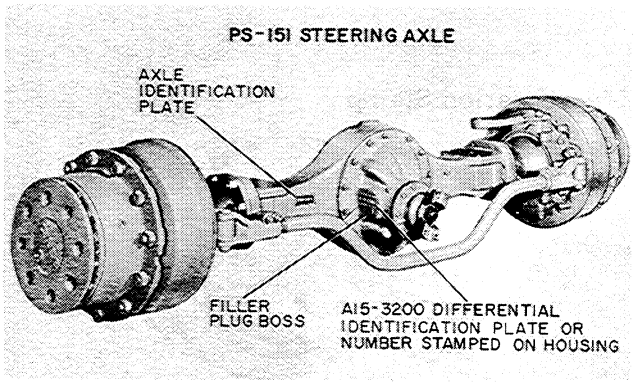

Figure T-14. PS-151 Steering Axle

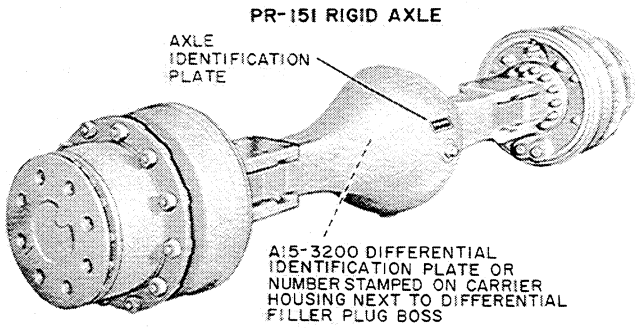

Figure T-15. PR-151 Rigid Axle

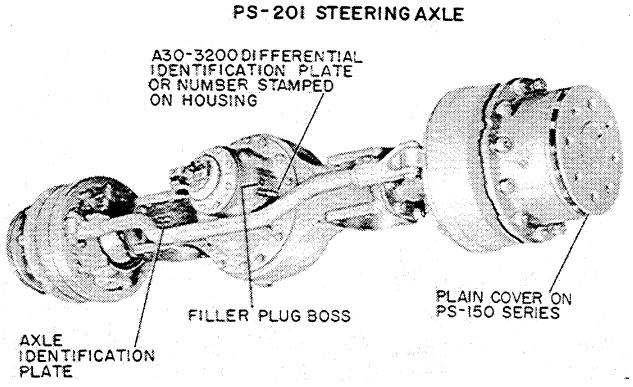

Figure T-16. PS-201 Steering Axle

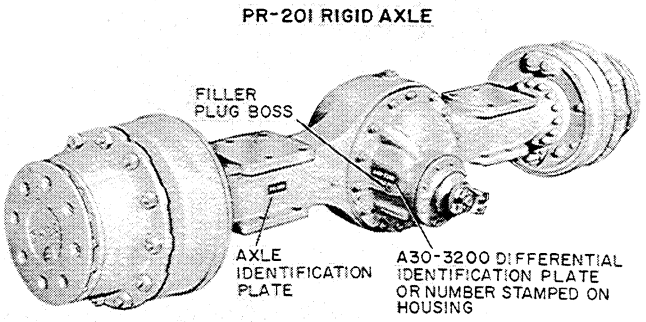

Figure T-17. PR-201 Rigid Axle

DIFFERENTIAL - Removal

The differential must be removed from the axle housing before any service operations can be performed.

Before the differential can be removed it will first be necessary to slip the axle shaft out of engagement with the differential side gear, Figure T-18 and Figure T-20.

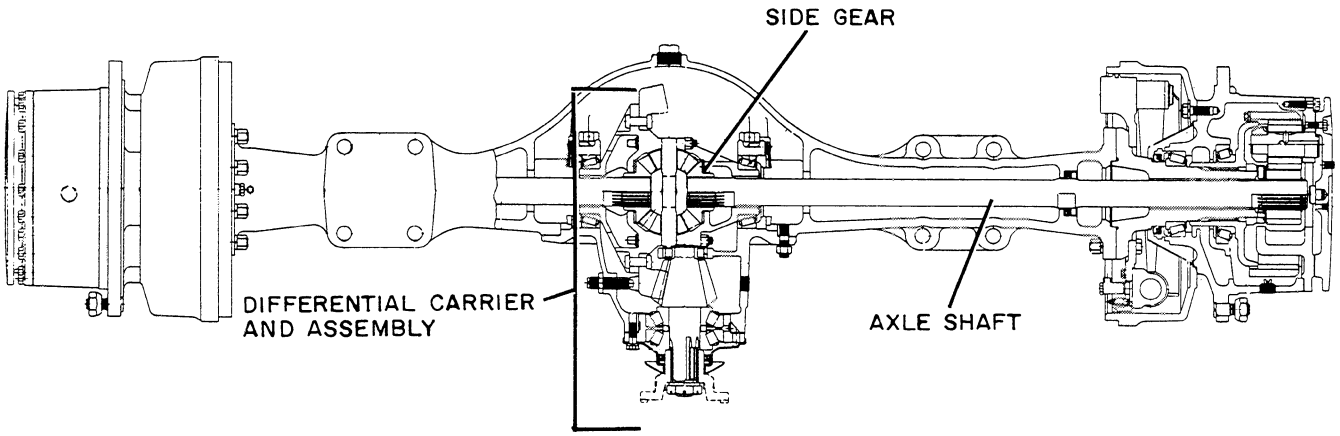

Figure T-18. Rigid Axle

AXLE SHAFT REMOVAL - RIGID AXLE

1. Remove the planetary wheel cover capscrews and cover, Figure T-19.

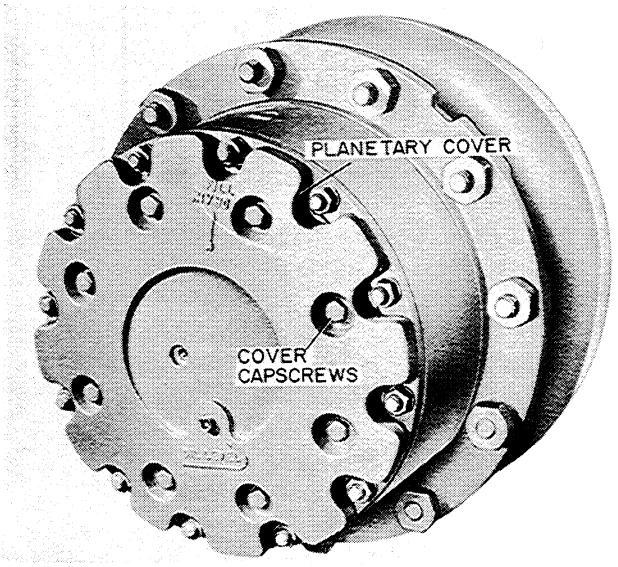

Figure T-19

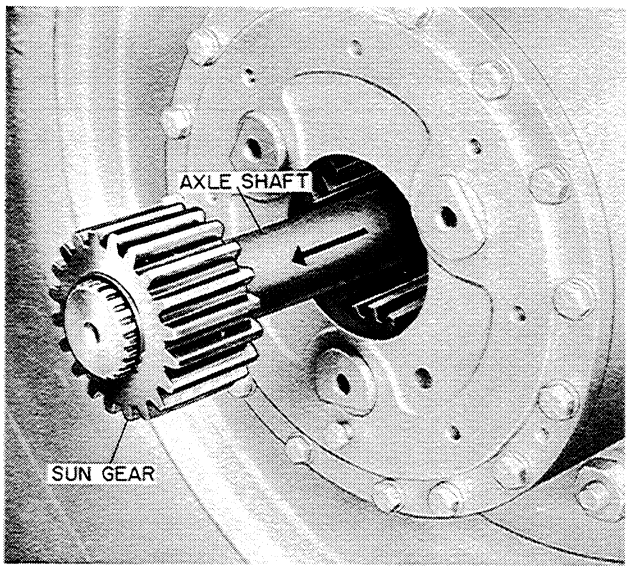

Figure T-20

2. With the planetary cover removed, grasp the sun gear and axle shaft, Figure T-20. Then pull outward until the axle shaft is free from the differential side gear.

AXLE SHAFT REMOVAL - STEERING AXLE

1. Disconnect the tie rod yoke by removing the tie rod yoke bolt, Figure T-21.

2. Disconnect the rear steering drag link, Figure T-21.

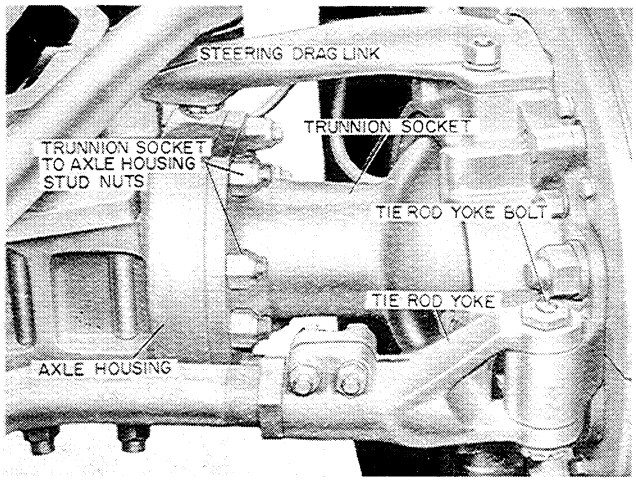

Figure T-21. Steering Yoke

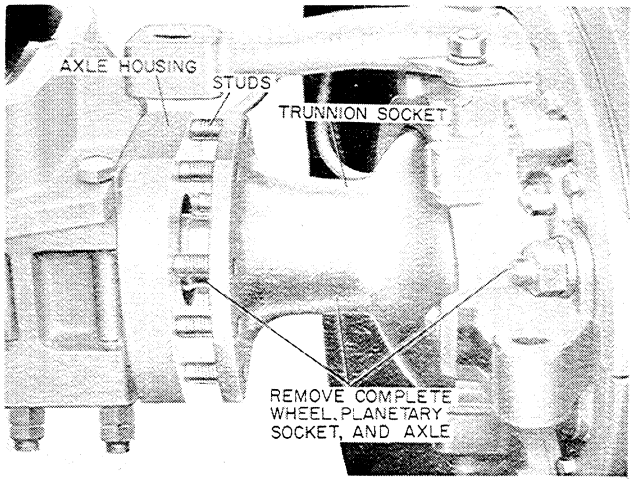

Figure T-22

3. Use either a chain hoist or roller jack to support the wheel and planetary so the weight is not allowed to rest on the axle shaft.

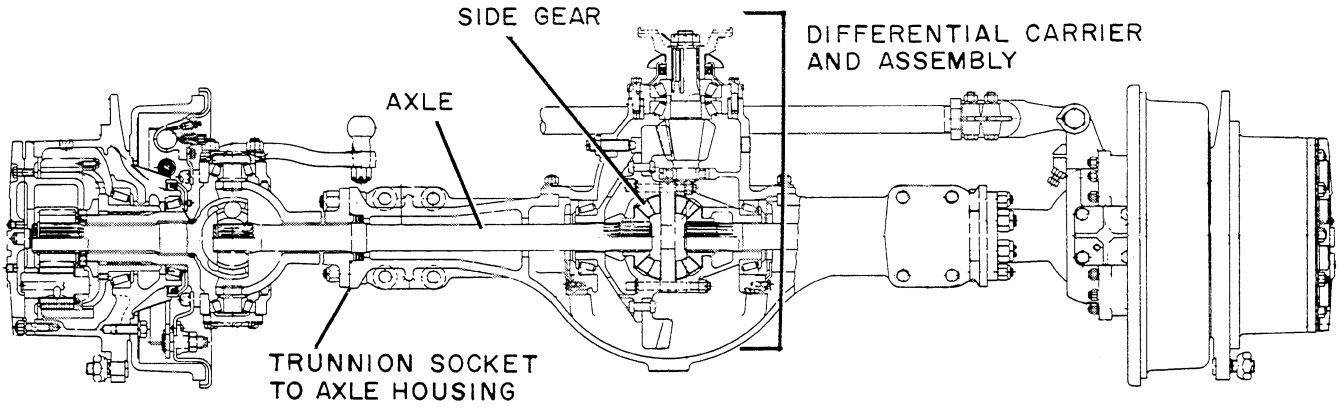

Figure T-23. Steering Axle

4. Remove the trunnion socket to housing stud nuts shown in Figure T-21

5. Now the complete wheel, planetary, socket and axle can be pulled outward far enough so the axle shaft can be disengaged from the differential side gear, Figures T-22 and T-23.

REMOVAL OF THE DIFFERENTIAL CARRIER ASSEMBLY FROM THE AXLE HOUSING

After the axles have been disengaged from the differential side gears the differential carrier can be removed as follows:

1. Remove the drain plug from the bottom of the axle housing, Figure T-24 and drain the differential lubricant.

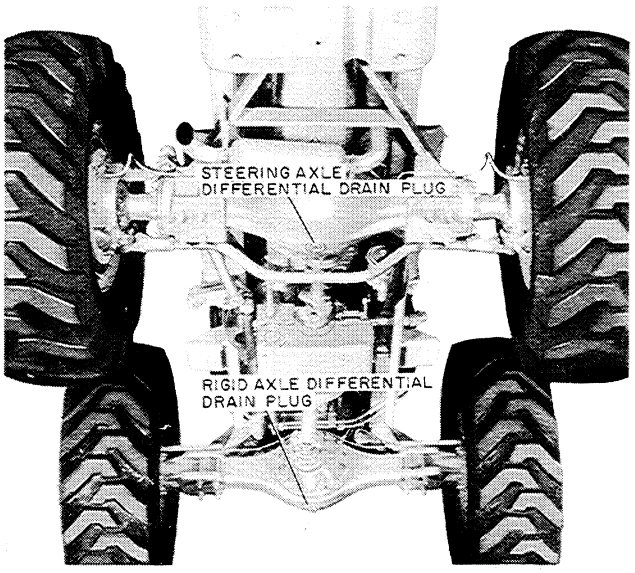

Figure T-24

2. Remove the four capscrews that hold the drive shaft universal joint to the differential companion yoke, Figure T-25.

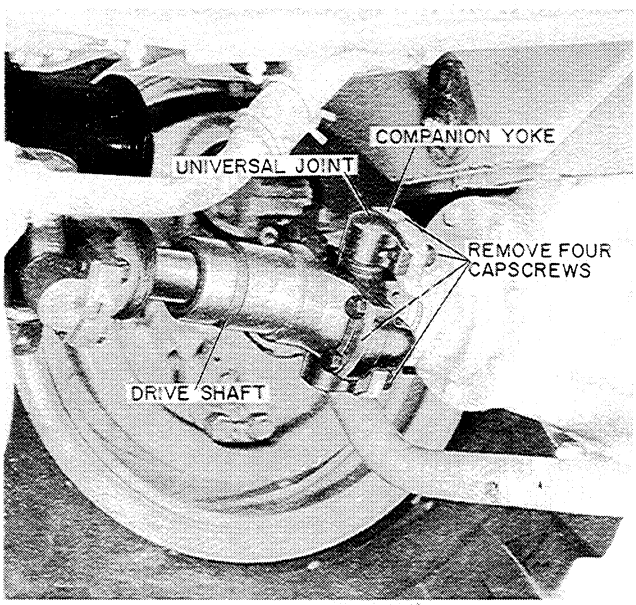

Figure T-25

3. Remove all of the carrier to housing stud nuts, except the two top nuts, Figure T-26.

Loosen the two top nuts, but do not remove from studs. This will prevent the carrier from falling when it is broken loose from the housing, Figure T-26.

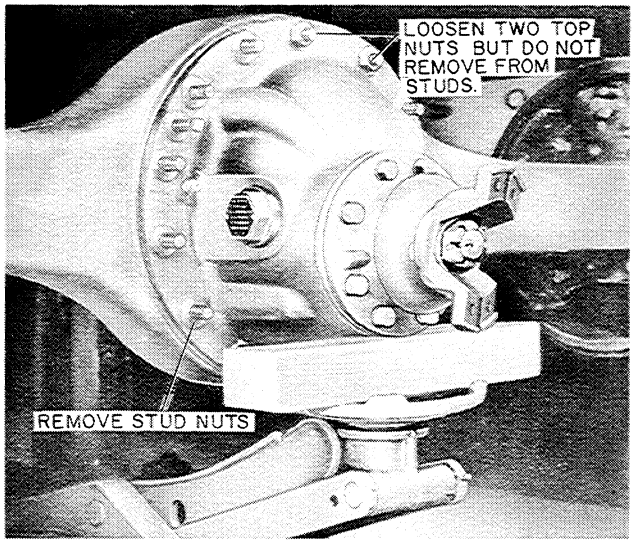

Figure T-26

4. Break the carrier loose from the axle housing with a rawhide hammer.

5. Remove the two top nuts and washers and work the carrier free. A small pinch bar having a rounded end may be used to straighten the carrier in the housing bore. Also a roller jack may be used to facilitate removal of the carrier, Figure T-27.

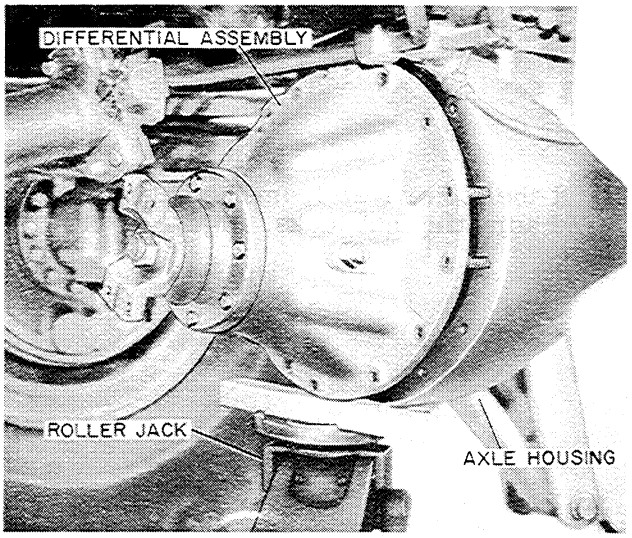

Figure T-27

Disassembly of the Differential Carrier

After the differential has been removed, it can easily be disassembled if it is placed in a repair stand, Figure T-28. Any damage or worn parts must be replaced during reassembly. To disassemble the differential proceed as follows:

1. For ease in handling the differential during disassembly and assembly, place the carrier in a suitable holding fixture in Figure T-28.

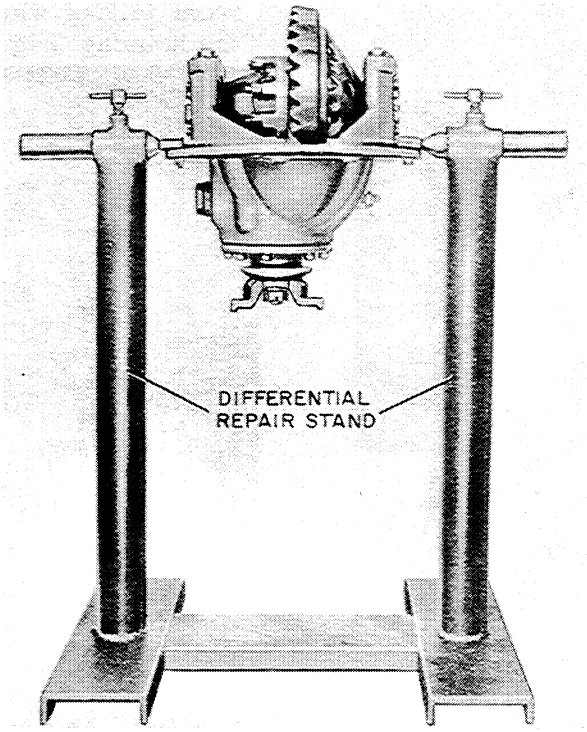

Figure T-28

A Heavy Duty Repair Stand (No. J3409) Can Be Purchased from the Kent Moore Organization, Warren Michigan.

2. Cut the lock wires from the cap screws and adjusting nut locks, Figure T-29.

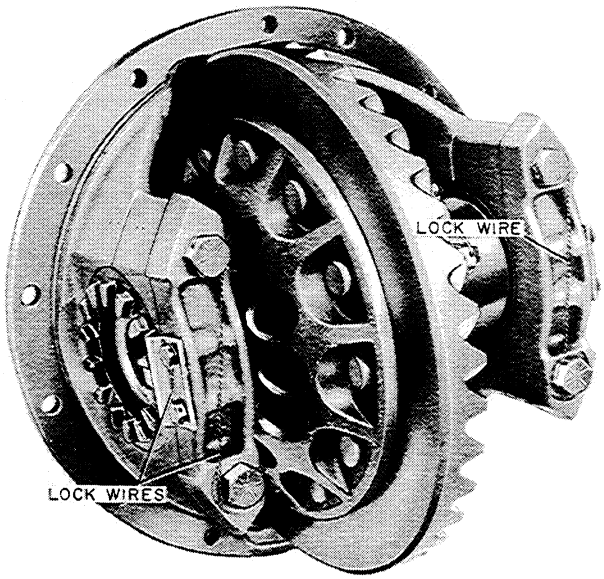

Figure T-29

3. Center punch one differential carrier leg and bearing cap for identification during assembly, Figure T-30.

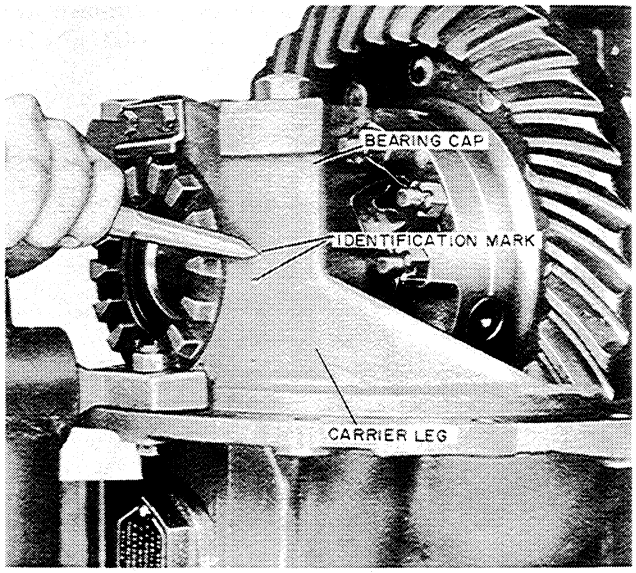

Figure T-30

4. Remove the bearing cap stud nuts, bearing caps and adjusting nuts, Figure T-31.

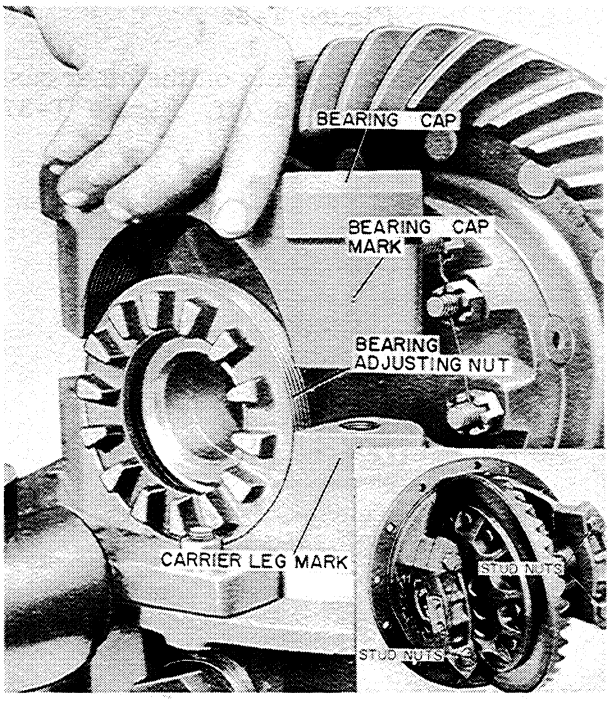

Figure T-31

5. Loosen the thrust block adjusting screw jam nut and back off the thrust block adjusting screw, Figure T-32.

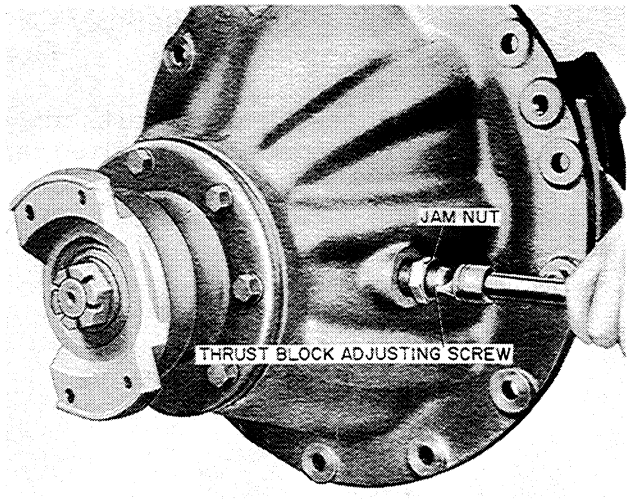

Figure T-32

6. Now lift the differential gear assembly out of the carrier, Figure T-33. Note: Raising the differential assembly out of the carrier can be facilitated by slipping a steel bar through center of the differential and using the ends of the bar as handles, Figure T-33.

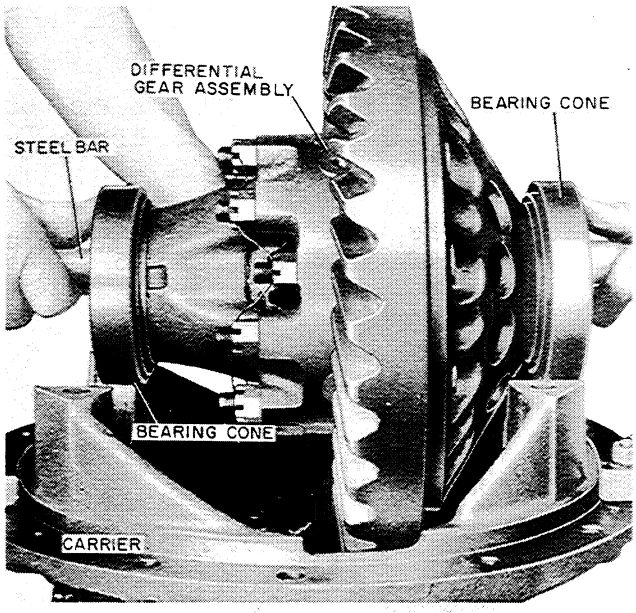

Figure T-33

NOTE

Also remove the thrust block from inside the carrier.

Disassembly Of The Differential Case And Gear Assembly

7. If the original identification marks are not clear on the differential case halves, mark both halves with a punch or chisel for correct alignment during assembly, Figure T-34.

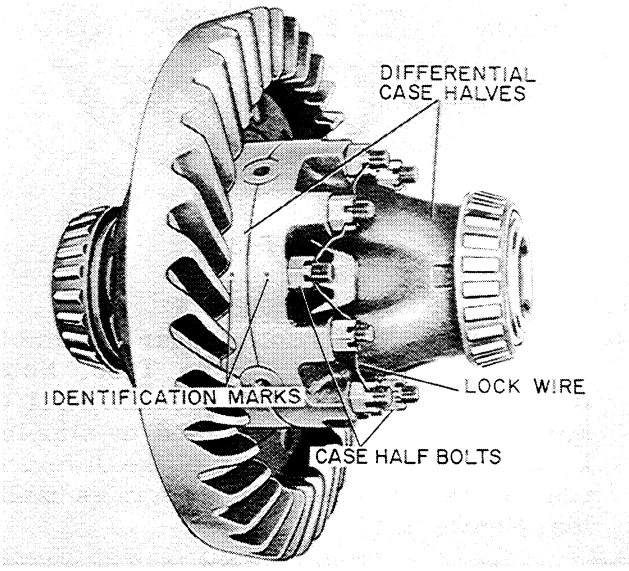

Figure T-34

8. Cut the lock wire and remove the bolts, to seperate the case halves, Figure T-34 and T-35.

9. Remove the spider, pinions, side gears and thrust washers, Figure T-35.

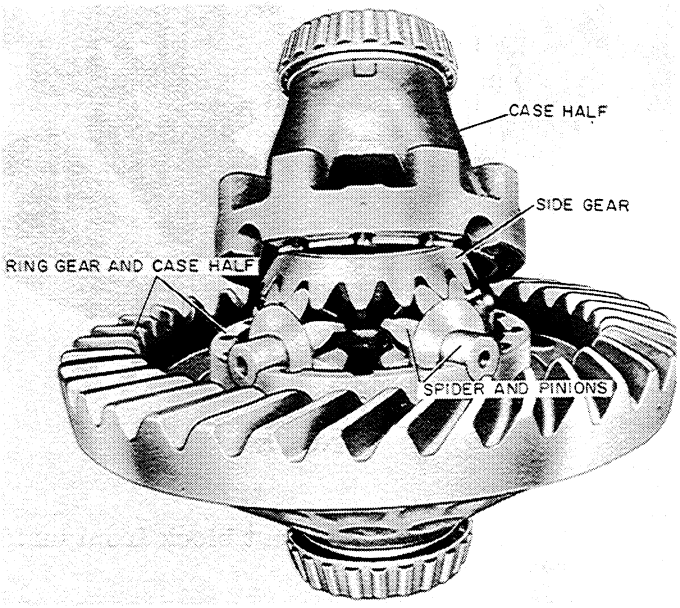

Figure T-35

10. If the differential bearing on the ring gear case half is damaged, remove the bearing, using an OTC No. 1001 Puller or equivalent, Figure T-36.

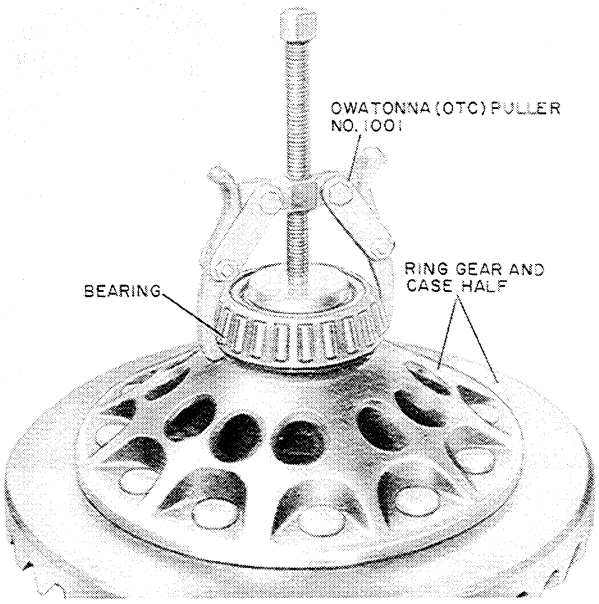

Figure T-36

11. The differential bearing on the other case half can be pressed off, Figure T-37.

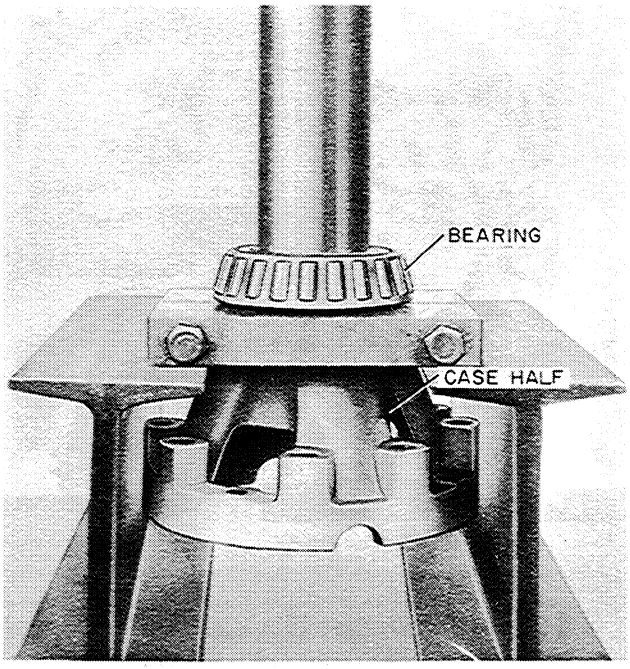

Figure T-37

Removal And Disassembly Of The Pinion And Bearing Cage

1. Hold the pinion flange with a suitable tool and remove the pinion shaft nut and washer, Figure T-38.

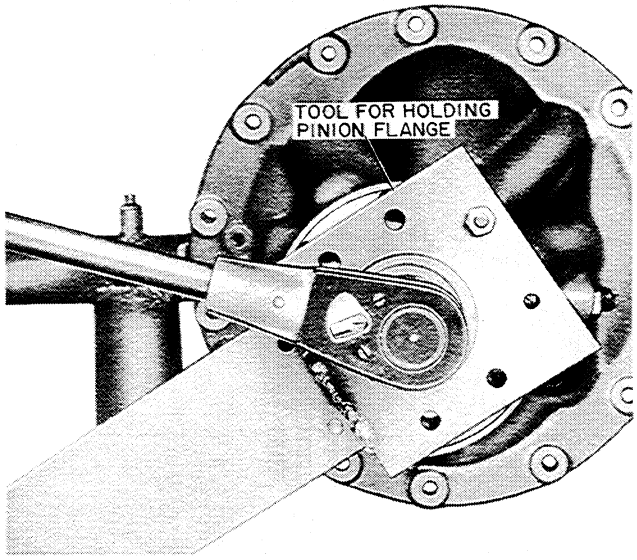

Figure T-38

2. Remove the pinion flange using an OTC No. 927 puller or equivalent as shown in Figure T-39.

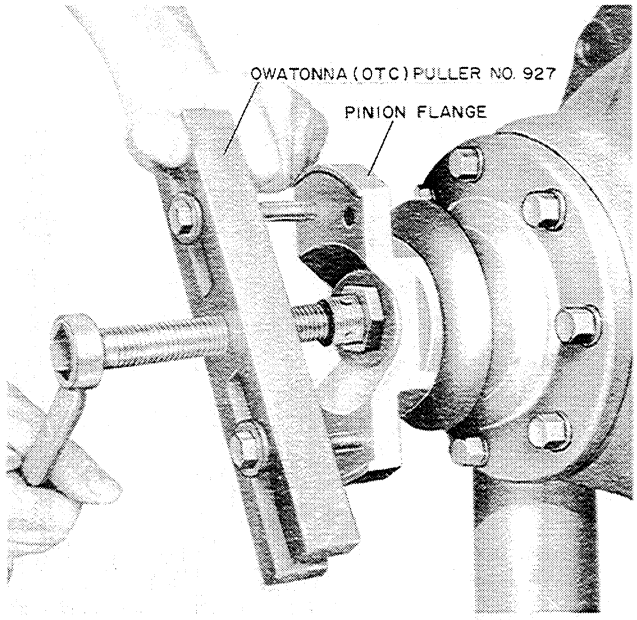

Figure T-39

3. Remove the pinion cage cap screws and bearing cover, Figure T-40.

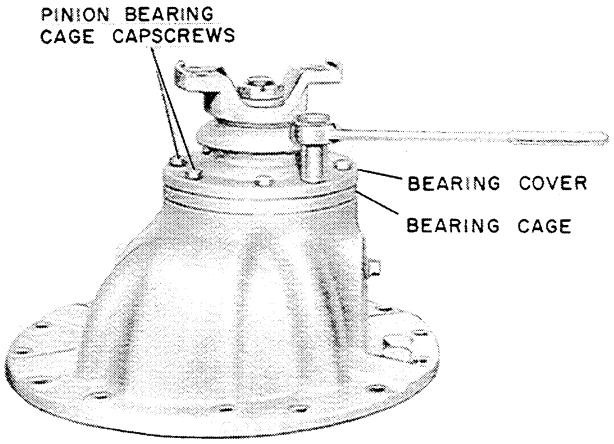

Figure T-40

4. Now remove the bearing cage using three puller screws in the holes provided, Figure T-41.

IMPORTANT: Use 7/16" N.C. dog point (flat end) puller screws - DO NOT USE A POINTED PULLER SCREW AS IT WILL DAMAGE CARRIER FLANGE).

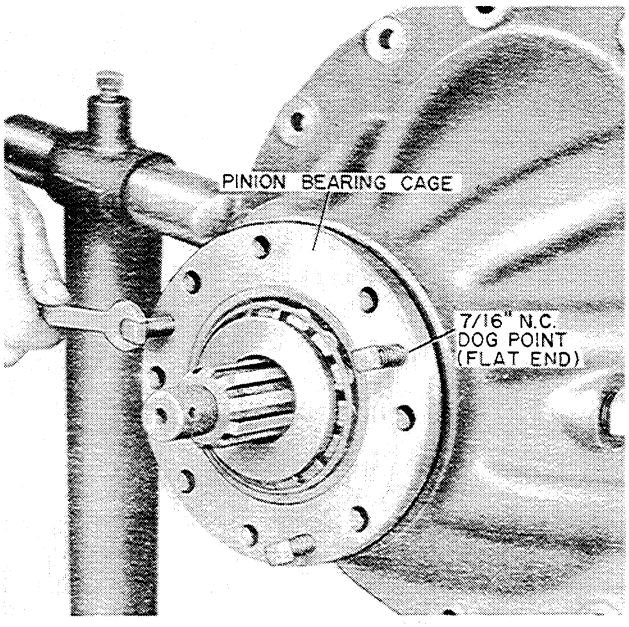

Figure T-41

5. Lightly tap the bevel pinion and bearings out of the differential carrier, Figure T-42. Note: Tap on end of pinion shaft - NOT ON BEARING.

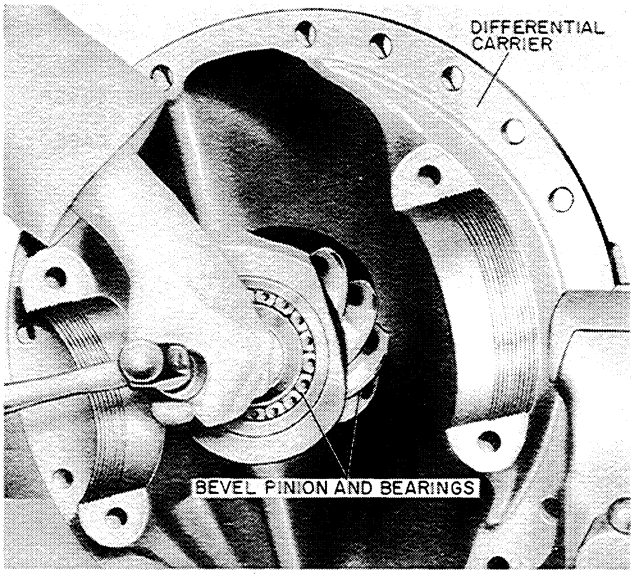

Figure T-42

6. Press the inner bearing off of the pinion shaft, Figure T-43.

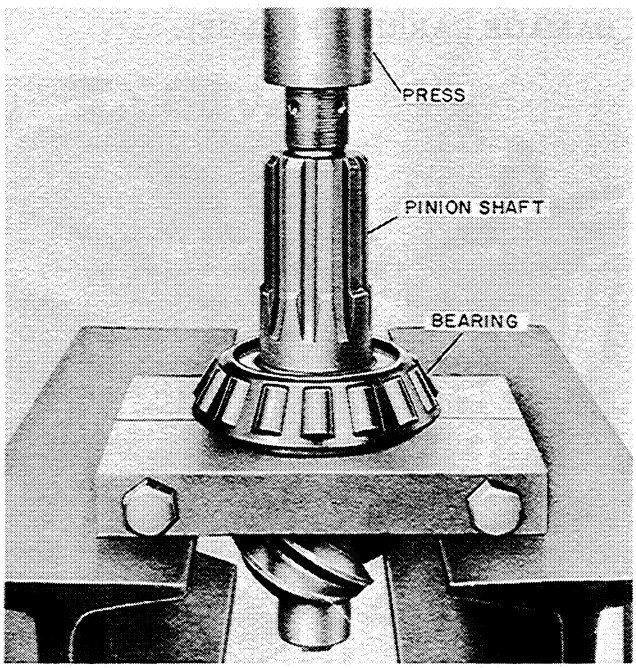

Figure T-43

7. If it is necessary to replace the rear radial bearing, first remove the snap ring, Figure T-44 -

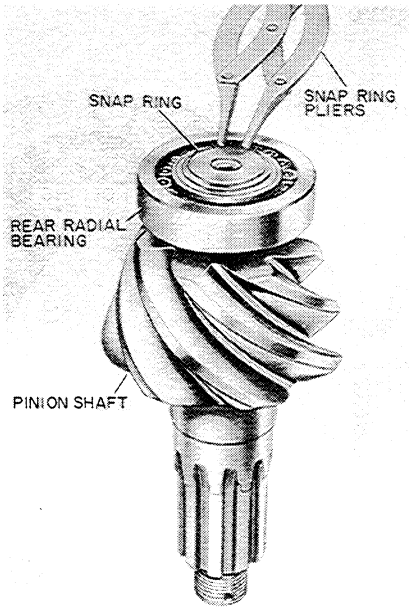

Figure T-44

8. then press the bearing off of the pinion shaft , Figure T-45.

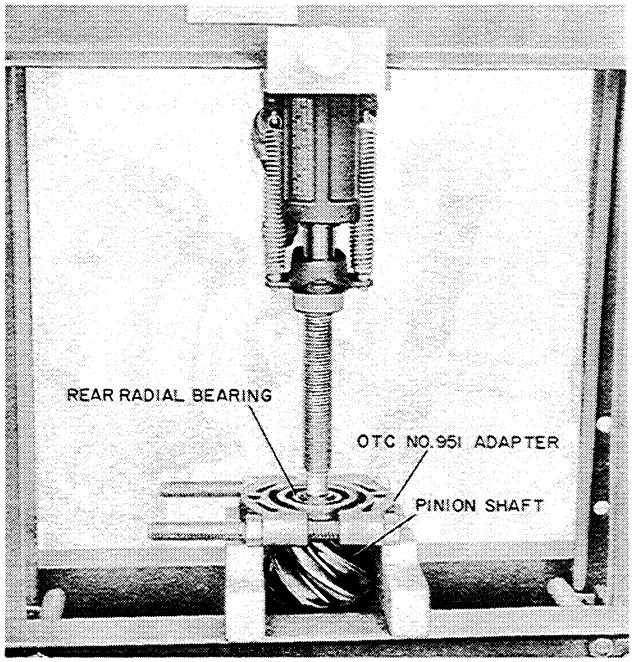

Figure T-45

DIFFERENTIAL RING GEAR REMOVAL AND REPLACEMENT

If inspection reveals:

1. Cracked or broken ring gear rivets, the rivets must be replaced with the special bolts as described below.

2. A pitted or scored pinion or ring gear it will be necessary to replace both pinion, and ring gear with a new matched set - remove and replace the ring gear as described below:

Rivet Removal

1. Carefully center punch rivets in the center of the rivet head.

2. Use a 1/32" smaller drill then the body of the rivet,drill through the rivet head,Figure T-46.

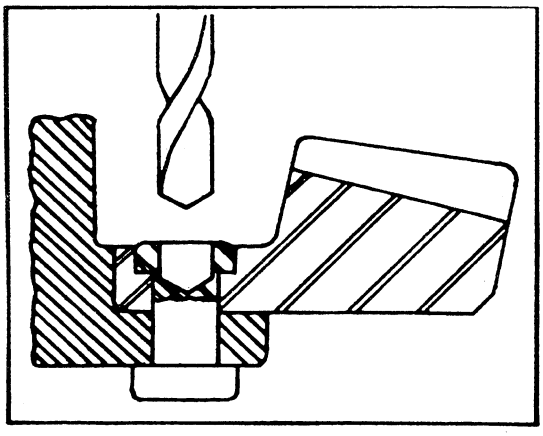

Figure T-46

3. After drilling the head punch out the rivets.

IMPORTANT

Never try to chisel the rivets heads off to remove the ring gear from the case,Figure T-47.

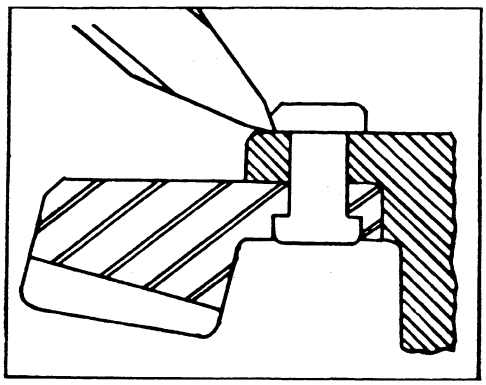

Figure T-47

Chisling of the rivets will cause elongated holes in the case flange, Figure T-48.

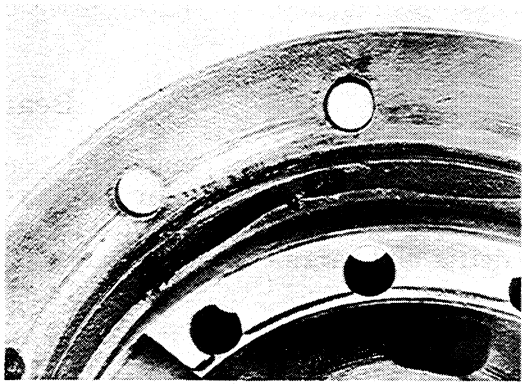

Figure T-48

Bolt Installation

Whenever the ring gear rivets are removed they are to be replaced with special bolts. When installing the special bolts make sure the bolt head is on the back side of the ring gear, Figure T-49.

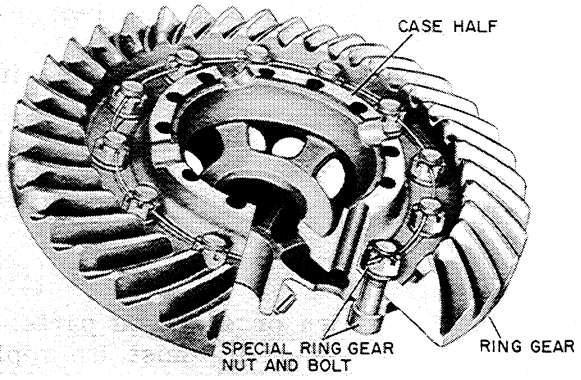

Figure T-49

With the bolt installed correctly, install the nut down against the ring gear and tighten to proper torque. Listed below - These special bolts are all Grade 8 - DO NOT SUBSTITUTE.

Differential Model	Case Part No. of Special Bolt	Quant. Used	Torque Ft. Lbs.
A15 - 3200	A16437	12	94-102
A30 - 3200	A16438	12	186-205

NOTE: After the special bolts have been properly torqued - lock in place with cotter pin or soft iron locking wire.

DIFFERENTIAL - Inspection

Before inspecting parts thoroughly clean them. Clean parts having ground and polished surfaces such as gears, bearings and shafts, in a solvent such as kerosene or diesel fuel.

DO NOT CLEAN PARTS IN GASOLINE, HOT SOLUTION TANK, SODIUM HYDROXIDE OR-THOSILICATES, OR PHOSPHATES.

It is impossible to overstress the importance of careful and thorough inspection of the drive unit parts prior to reassembly. Thorough visual inspection for indications of wear, stress, pitting and the replacement of such parts as are necessary, will eliminate costly and avoidable drive unit failure.

Bearing, Cups and Cones

Inspect all bearings, cups and cones, including those not removed from parts of the unit, and replace if the rollers or cups are worn, pitted or damaged in any way. Parts needing replacement should be removed with a suitable puller or in a press with sleeves. Avoid the use of drifts and hammers which may easily mutilate or distort component parts.

Gears

Inspect all the gears for wear or damage. Gears which are worn, ridged, pitted or scored should be replaced. When necessary to replace either the pinion or ring gear, the pinion and ring gear must be replaced as a matched set.

Differential Assembly

Inspect the differential assembly for the following:

1. Pitted, scored or worn thrust surfaces of differential case halves, thrust washers, spider trunnions and all differential gears. Thrust washers must be replaced in sets. The use of a combination of old and new washers will result in premature failure.

2. Check ring gear rivets for cracks - if cracked, replace rivets with special bolts - Refer to Page T-17.

3. Damage (pitting scoring) to the differential pinion, ring gear and side gear teeth. Always replace differential pinion and ring gear in matched sets.

General

1. Replace all worn or damaged parts. Hex Nuts with rounded corners, all lock washers, all oil seals and gaskets must be replaced at time of reassembly. Use only Genuine CASE parts.

2. Remove all nicks, marks and burrs from machined surfaces - Threads must be clean and free to obtain accurate adjustments and correct torque.

3. The burrs caused by lock washers, at the spot face of stud holes, on bearing cages and covers must be removed to assure easy reassembly of the parts.

4. Use a press when assembling component parts.

5. **Tighten all fasteners to the correct torque listings - Use soft iron wire to lock bolts where indicated.**

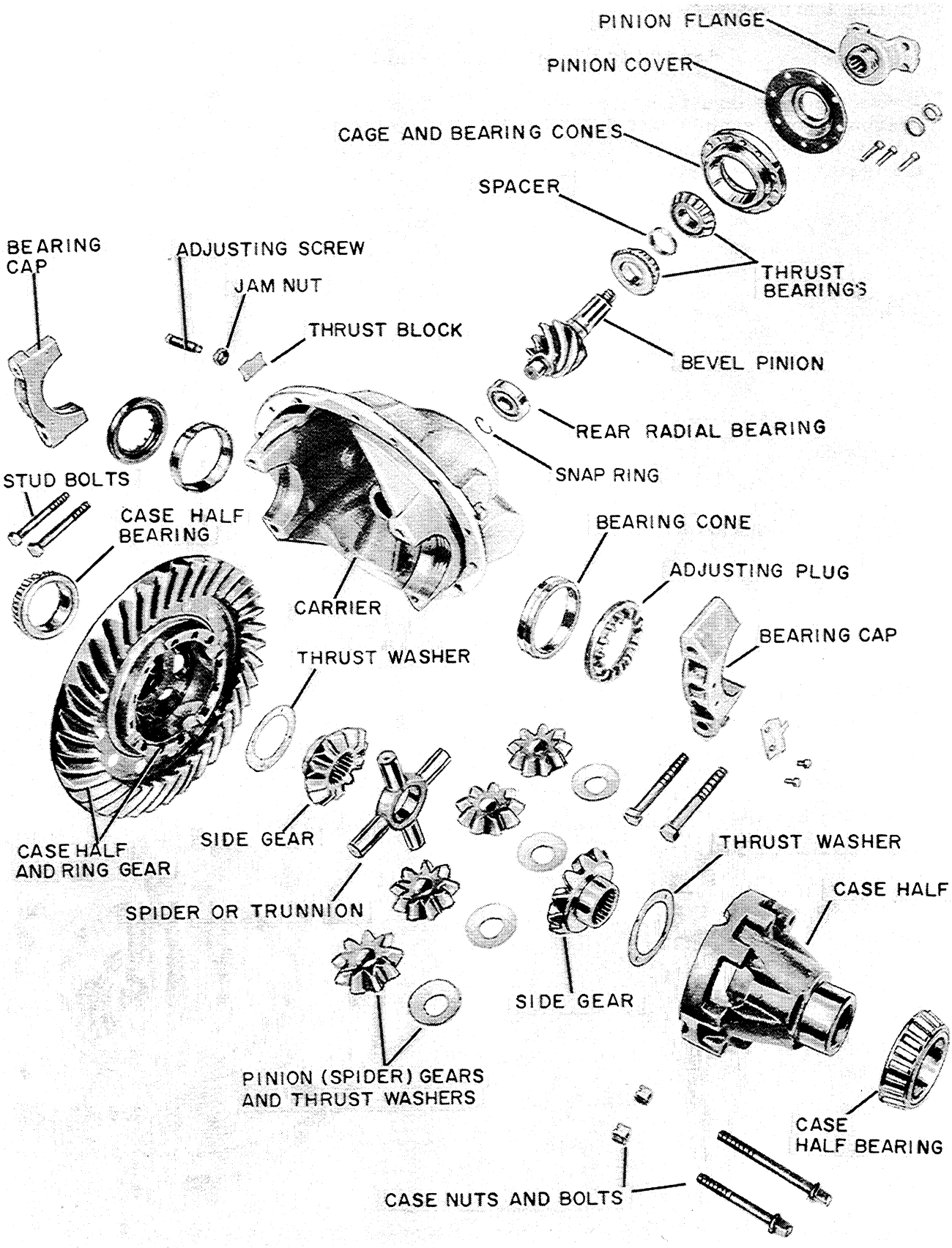
PINION FLANGE
PINION COVER
CAGE AND BEARING CONES
SPACER
THRUST BEARINGS
BEARING CAP
ADJUSTING SCREW
JAM NUT
THRUST BLOCK
BEVEL PINION
REAR RADIAL BEARING
SNAP RING
STUD BOLTS
CASE HALF BEARING
CARRIER
BEARING CONE
ADJUSTING PLUG
BEARING CAP
THRUST WASHER
CASE HALF AND RING GEAR
SIDE GEAR
SPIDER OR TRUNNION
THRUST WASHER
CASE HALF
SIDE GEAR
PINION (SPIDER) GEARS AND THRUST WASHERS
CASE HALF BEARING
CASE NUTS AND BOLTS

Figure T-50

DIFFERENTIAL - Re-Assembly

Before starting to assemble the differential assembly make sure all parts are thoroughly cleaned inspected and all worn or damaged parts replaced. Prior to assembly coat all parts with axle lubricant.

Assembly Of The Pinion And Cage Assembly

1. Press the rear thrust bearing and radial bearing firmly against the pinion shoulders with a sleeve that will bear only on the bearing inner race, Figure T-51.

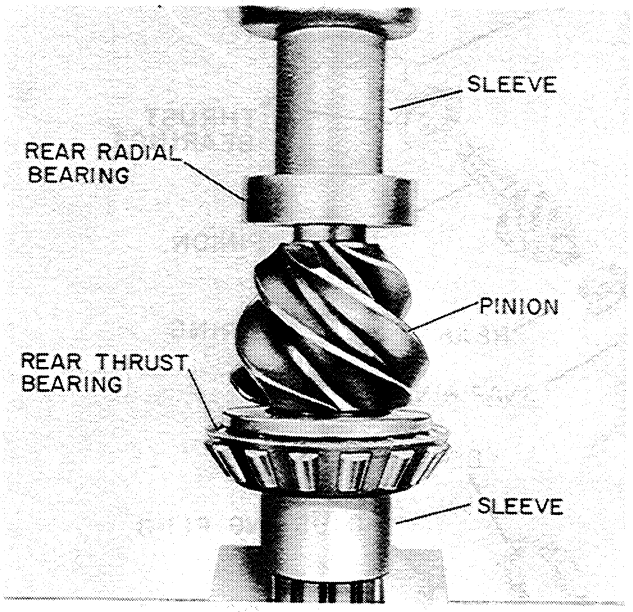

Figure T-51

2. Install the radial bearing lock ring after the bearing is pressed in place, Figure T-52.

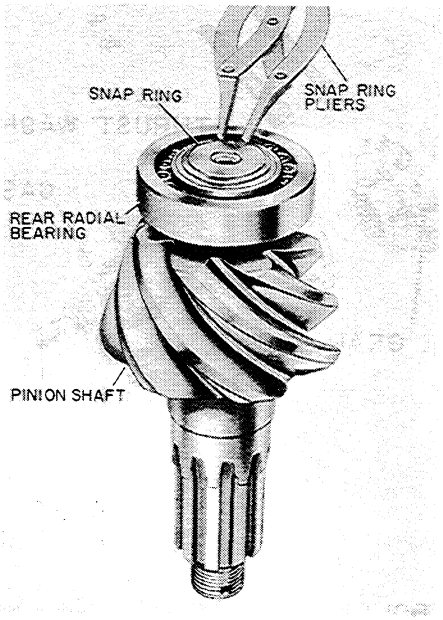

Figure T-52

3. If new bearing cups (one on each side) are to be installed, press them into the bearing cage until the cup bottoms against the shoulder in cage, Figure T-53.

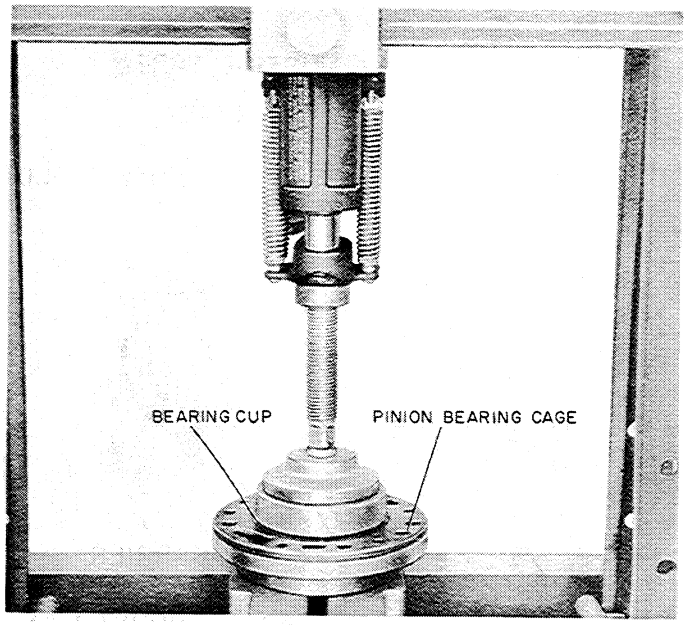

Figure T-53

4. Place the pinion cage over the pinion and bearing assembly and install spacer over the pinion shaft, Figure T-54.

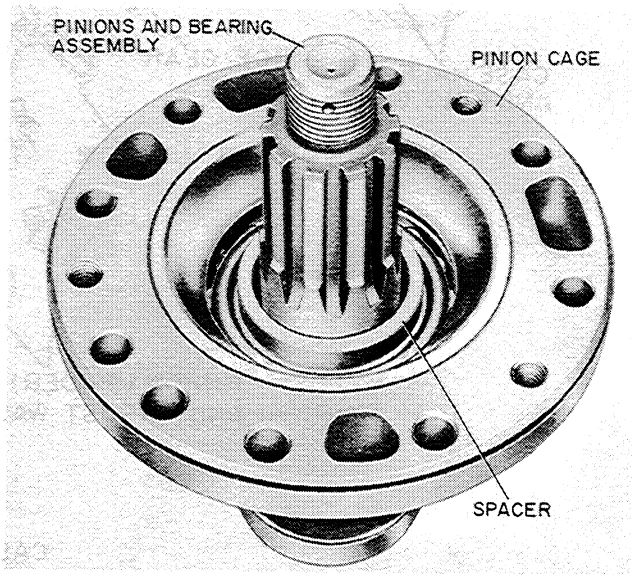

Figure T-54

5. Press the front bearing down against the spacer. Rotate the cage several times to make sure the bearing is squarely seated to insure full contact, Figure T-55.

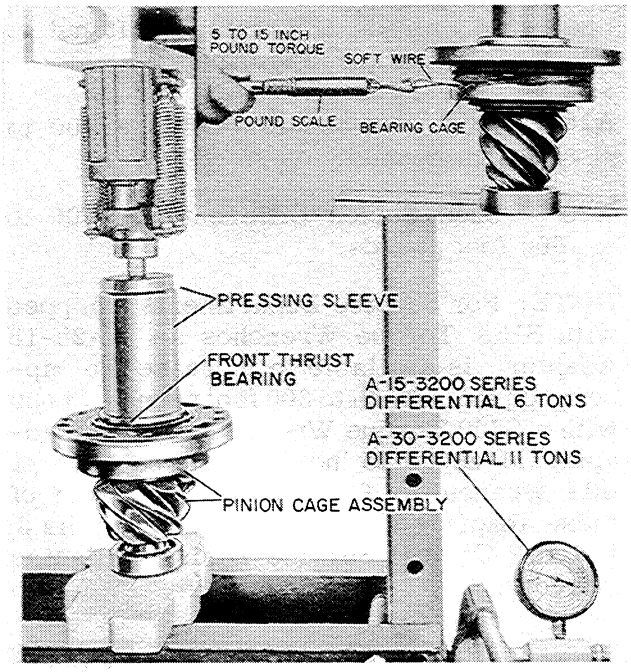

Figure T-55

6. While in the press under pressure, check the bearing pre-load torque, Figure T-55.

A15 - 3200 Series Differential - 6 Tons Pressure

A30 - 3200 Series Differential - 11 Tons Pressure

7. Wrap a soft wire around the bearing cage and pull on a horizontal line with a pound scale, Figure T-55.

IMPORTANT

The rotating pre-load torque must be within 5 to 15 inch pounds. If not, use a thinner spacer, Figure T-54, to increase the pre-load torque or a thicker spacer, Figure T-54, to decrease the pre-load torque.

Example: Assuming the pinion cage diameter is 6 inches, take the radius which would be 3 inches times the amount of pull on the scale which will give the inch pound pre-load to

8. Now install a new gasket on the bearing cover, Figure T-56.

NOTE: If the oil seal in the bearing cage cover is damaged both cover and seal must be replaced as the seal is supplied pressed in the cover.

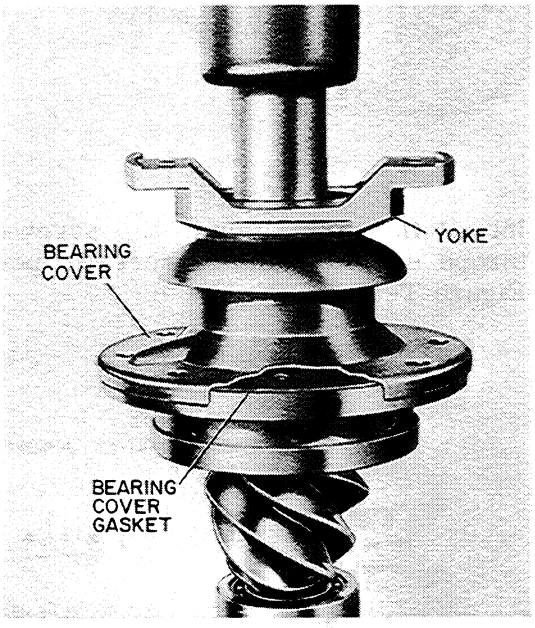

Figure T-56

9. Install the bearing cover and yoke onto the pinion shaft, Figure T-56. Then install the pinion shaft washer and nut.

10. Install the pinion and cage assembly into the carrier housing using the same shims that were removed during disassembly, Figure T-57.

NOTE: The differential pinion and differential ring gear are a matched set and are provided for repairs as such. One cannot be installed without the other. The mating numbers are etched on the spline of the pinion gear and the hub of the ring gear, Figure T-57.

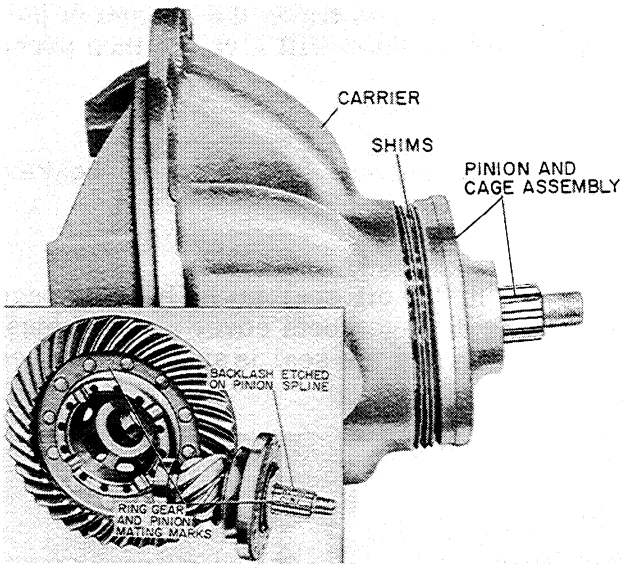

Figure T-57

11. Install the pinion cover cap screws and torque evenly to the correct foot pounds, Figure T-58.

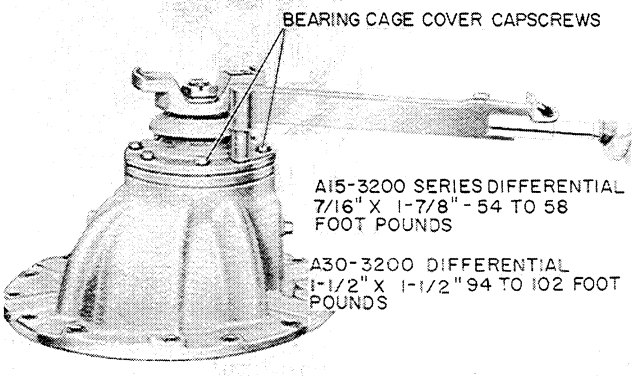

Figure T-58

A15 - 3200 Series Differential 7/16 x 1-7/8 = 54to58 foot pounds.

A30 - 3200 Series Differential 1/2 x 1-1/2 = 94 to 102 foot pounds.

12. After the pinion shaft assembly has been installed, torque the pinion shaft nut to the correct torque, Figure T-59.

A15 - 3200 Series Differential = 300 to 400 foot pounds.

A30 - 3200 Series Differential = 700 to 900 foot pounds.

NOTE: For Service Departments equipped with S150 Torque Wrenches an M-28-18 Adapter is available to increase the capacity of the wrench to 300 foot pounds. Shops with a S300 Torque Wrench can use an adapter M-28-60 to increase the capacity of this wrench to 900 foot pounds. Both of these adapters are available through the J. I. Case Central Service Division, Racine Wisconsin.

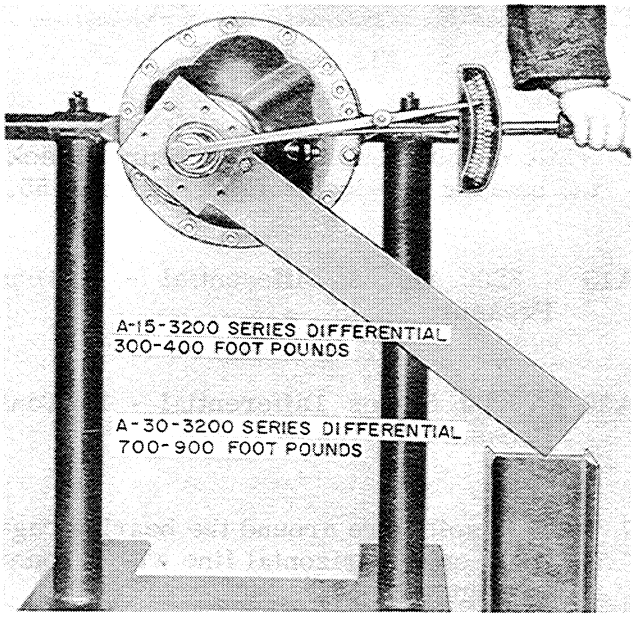

Figure T-59

Assembly Of The Differential Pinions Side Gears And Case Halves

1. If a new bearing is to be installed on the case half and ring gear assembly, press on the new bearing using on OTC No. 12 center, Figure T-60. Press bearing down until it contacts the shoulder on the case half.

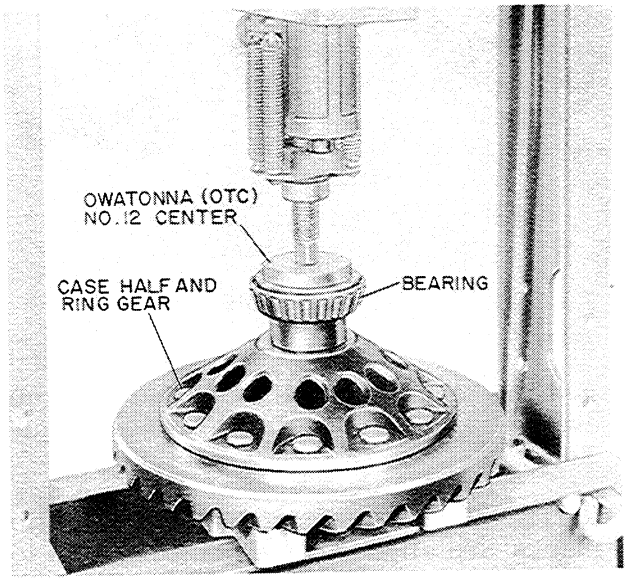

Figure T-60

2. If a new bearing is to be installed on the other case half, press on the bearing using an OTC No. 12 center, Figure T-61. Press bearing down until it contacts the shoulder on the case half.
IMPORTANT - Never install a new bearing on just one case half - always install new bearings on both halves. Installing only one bearing will disturb the back lash setting.

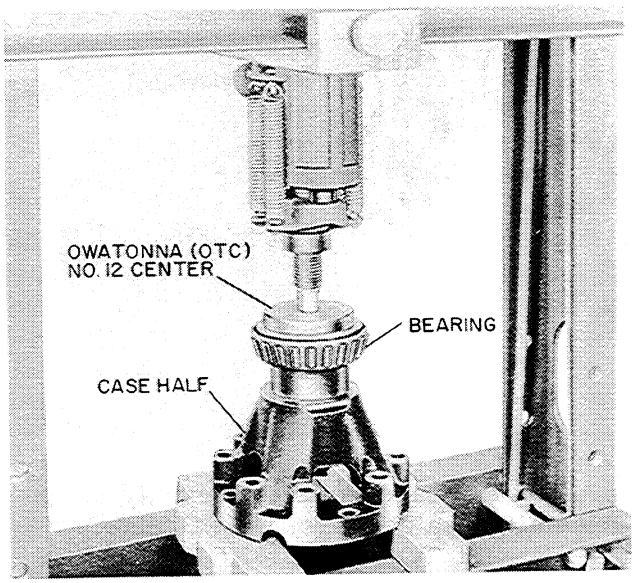

Figure T-61

3. Insert one of the thrust washers and one of the side gears into the case half and ring gear assembly as shown in Figure T-62.

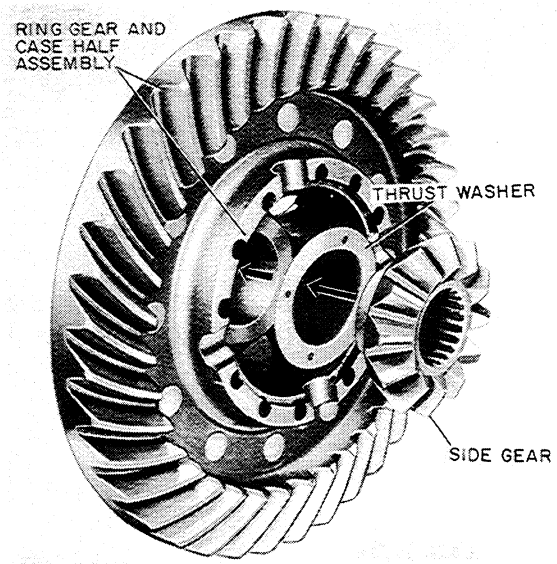

Figure T-62

4. Now assemble the spider and pinion gears in the order shown in Figure T-63.

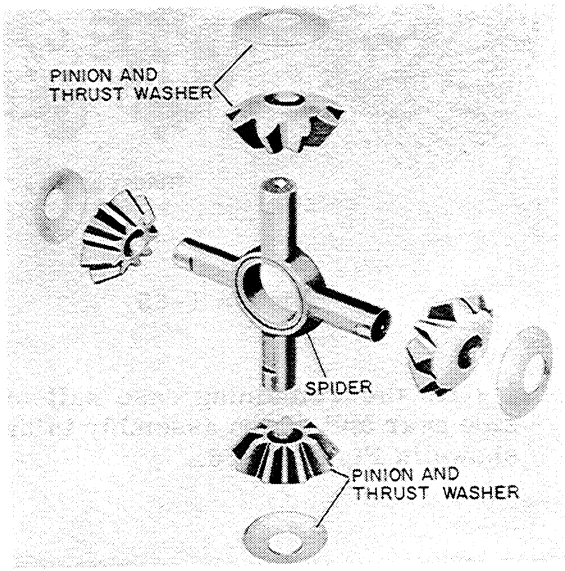

Figure T-63

5. Place the pinion and spider assembly on the case half and ring gear assembly, Figure T-64.

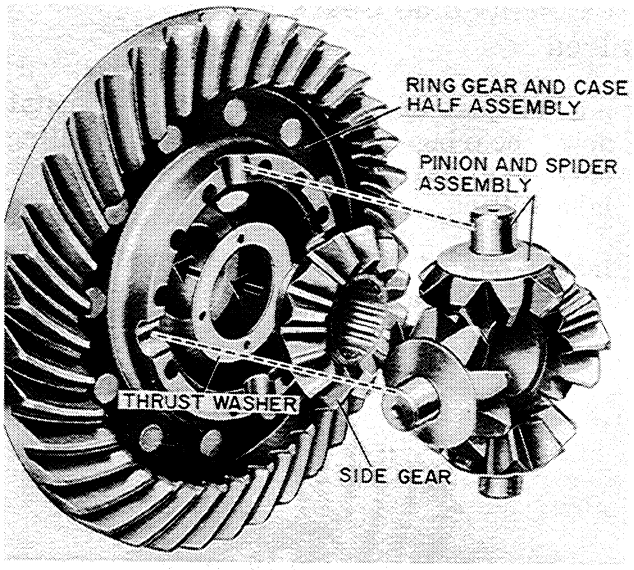

Fiure T-64

6. Now place the other side gear and thrust washers onto the pinion gears in the order shown in Figure T-65.

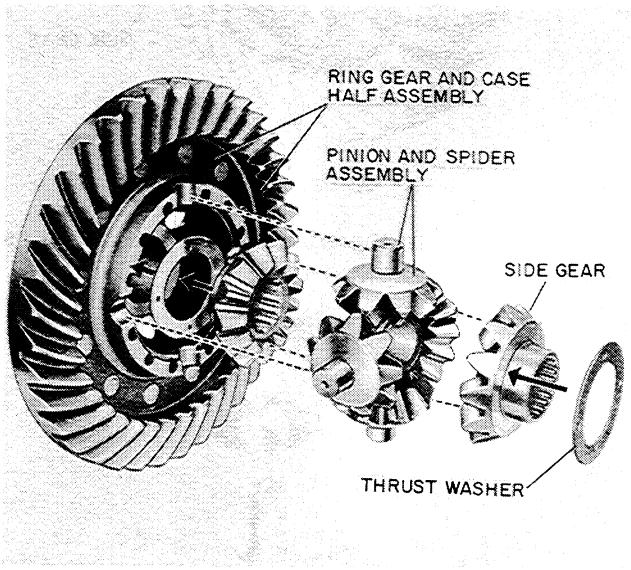

Figure T-65

7. Install the remaining case half over the side gear and pinion assembly in the order shown in Figure T-66.

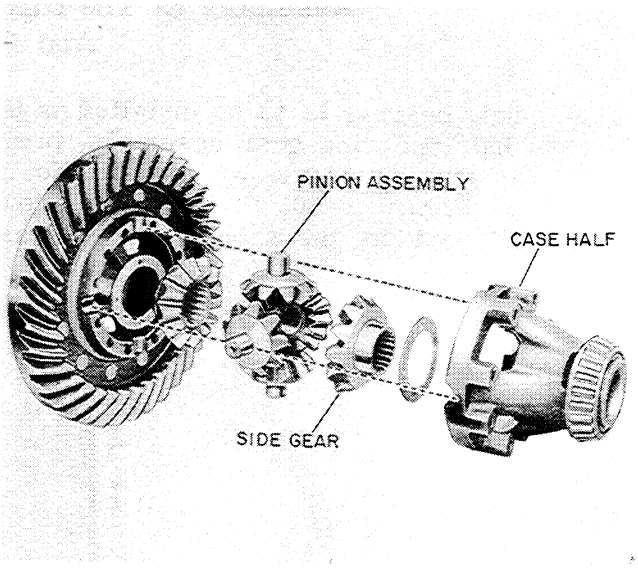

Figure T-66

8. Install the case half bolts and torque evenly to 94 to 102 foot pounds. Figure T-67.

NOTE: Make sure case half identification marks are aligned before bolting them together.

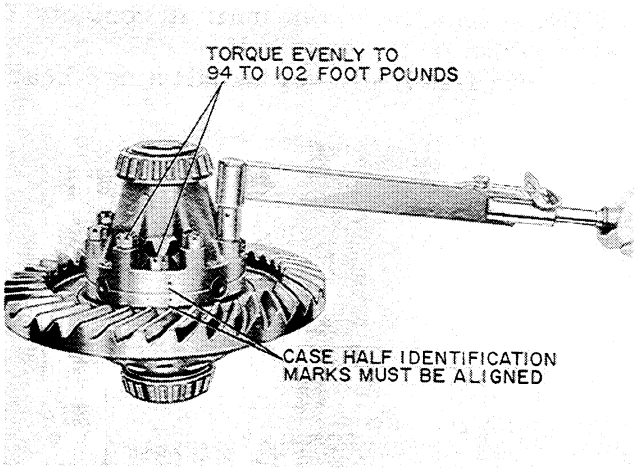

Figure T-67

IMPORTANT

After the case bolts are evenly torqued, install a safety wire. DO NOT BACK OFF THE NUT TO LINE UP HOLES, TIGHTEN IF NECESSARY.

Installation Of The Differential And Gear Assembly

1. Place the bearing cups over the assembled differential bearing cones, Figure T-68. Then position the differential assembly into the carrier, Figure T-68.
   NOTE: If the punch marks are still visible on the differential pinion and differential ring gear it is ideal (but not necessary) to align them during assembly. To obtain the most accurate backlash setting.

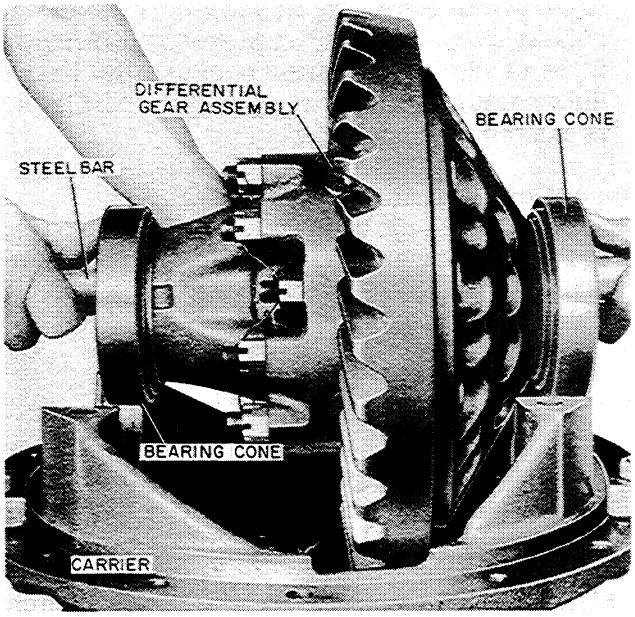

Figure T-68

2. Insert the bearing adjusting nuts and turning them in finger tight against the bearing cups, Figure T-69.

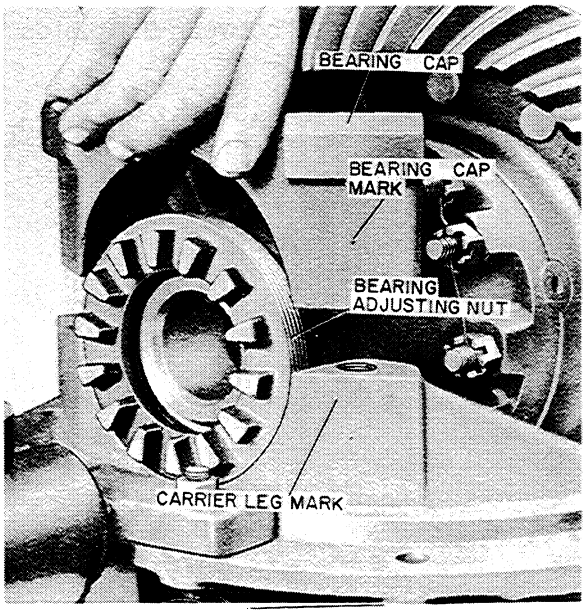

Figure T-69

3. Now install the bearing caps in the correct location and tap lightly into position, Figure T-69.

   NOTE: Match mark cap with marked carrier leg and unmarked cap with unmarked carrier leg.

IMPORTANT

If the bearing caps do not position properly, the adjusting nuts may be cross threaded. Remove the caps and reposition the adjusting nuts. Forcing caps into position will result in unreparable damage to the carrier housing or bearing caps.

4. Install the bearing cap bolts and torque to 127 to 140 foot pounds, Figure T-69.

5. Adjust the differential pre-load, backlash and check as described on Page T-26.

Adjusting The Differential Bearing Pre-Load

After the differential has been assembled in the carrier it will be necessary to first check the differential bearing pre-load.

IMPORTANT:Before checking pre-load, make sure there is some backlash between the pinion and ring gear - Setting pre-load without some backlash will result in a false bearing pre-load setting.

1. Using a dial indicator at the backface of the gear, loosen the bearing adjusting nut on the backface side of the ring gear, only. This adjusting nut must be loosened sufficiently to notice end play on the indicator, Figure T-70.

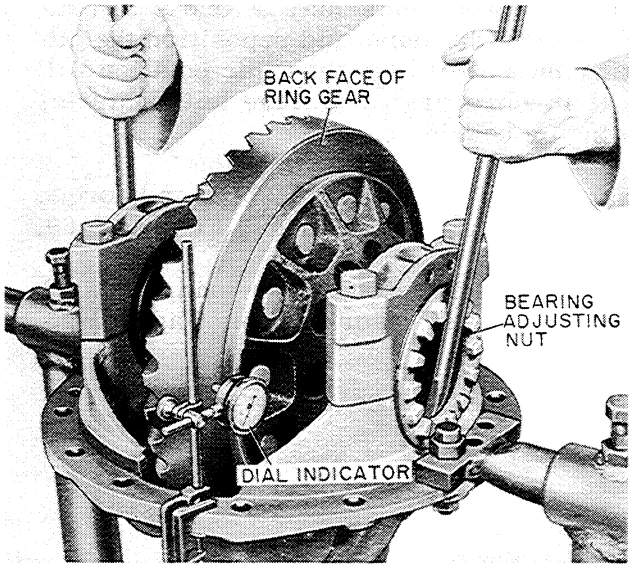

Figure T-70

2. Tighten this same adjusting nut only sufficiently to obtain no (.000) end play.

3. Rotate the gear and check for "runout." If runout exceeds. 008" remove the differential and check for cause because the bearings cannot be properly pre-loaded if there is runout.

Runout can be caused by:

1. Bearing or cup not properly pressed in place.
2. Improperly tightened case halves or bearing cap bolts.
3. Damaged bearing or cup.
4. Improperly installed ring gear.

4. After all "end play" has been removed and "run out" is at the minimum - the bearings can be pre-loaded as follows:

5. Tighten the adjusting nuts one notch each from .000" end play to pre-load the differential bearings.

Adjusting Pinion - Ring Gear Backlash

After the end play has been adjusted as described above, the backlash between the pinion and ring gear must now be properly adjusted.

1. When checking backlash a dial indicator must be used as shown in Figure T-71.
2. The backlash setting is etched in a spline on the pinion shaft, Figure T-71.
3. To adjust the backlash move the ring gear only. This can be done by:
   (a) Hold the pinion shaft so the pinion gear cannot turn.
   (b) Move the ring gear and note the reading on indicator if the backlash is not the same as etched on pinion gear.

   To Decrease backlash: Loosen the adjusting nut on gear side one notch at a time and tighten the nut on the backface side one notch at a time.

   To increase backlash: Loosen the adjusting nut on the backface side one notch at a time and tighten the nut on the gear side one notch at a time.

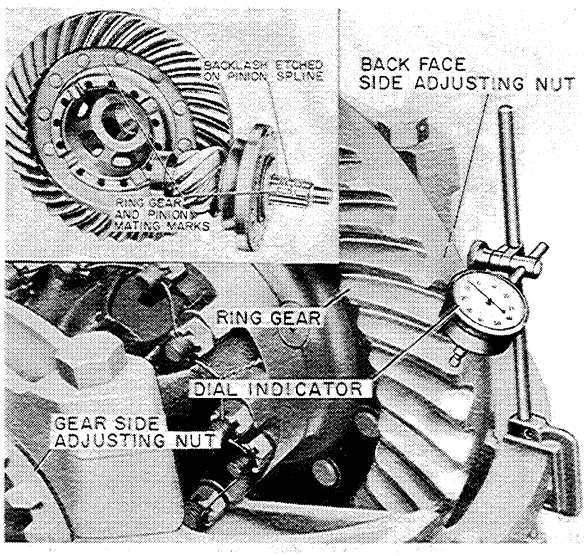

Figure T-71

CORRECT TOOTH CONTACT

Satisfactory Tooth Contact (Gears Unloaded)

With adjustments properly made (pinion) at correct depth and backlash properly set the contacts in Figure T-72, will be procured. The area of contact favors the toe and is centered between the top and bottom of the tooth.

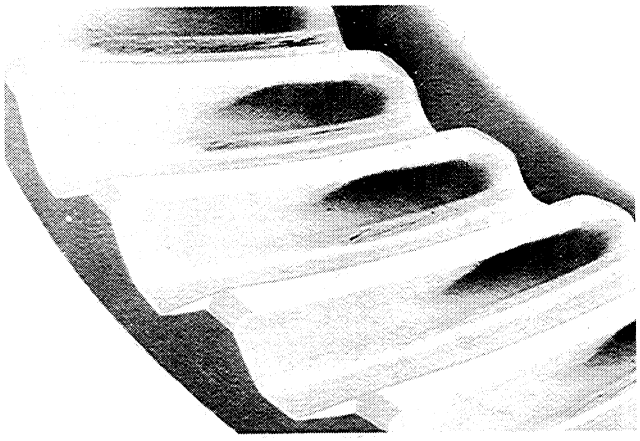

Figure T-72

The hand rolled pattern shown in Figure T-72 (gears unloaded), will result in a pattern centered in the length of the tooth when the gears are under load shown at right. The loaded pattern will be almost full length and the top of pattern will approach to top of the gear tooth.

Satisfactory Tooth Contact (Gears Loaded)

The pattern on the coast side of teeth will appear the same width as the drive side shown in Figure T-73; however, the over-all length will be centered between the toe and heel of gear tooth.

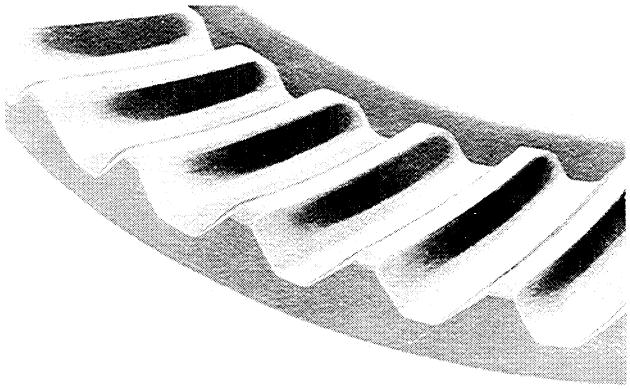

Figure T-73

Set used hypoid gear to have the tooth contacts to match wear patterns. Hand rolled patterns of used gears will be smaller in area and should be at the toe end of wear patterns.

INCORRECT TOOTH CONTACT

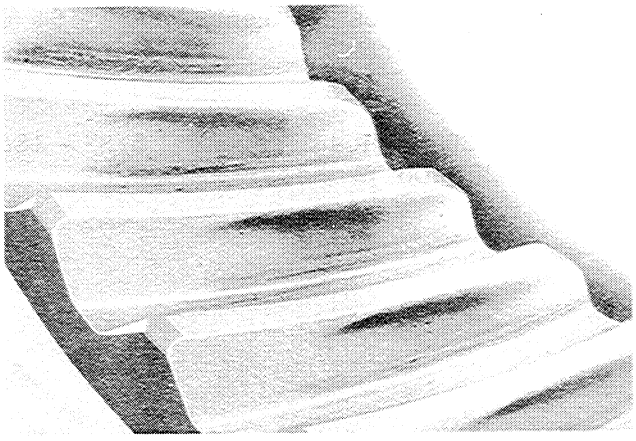

Figure T-74

A high contact indicates pinion is too far out. Set the pinion to the correct depth by removing shims under the pinion cage. Slight outward movement of hypoid gear may be necessary to maintain correct backlash.

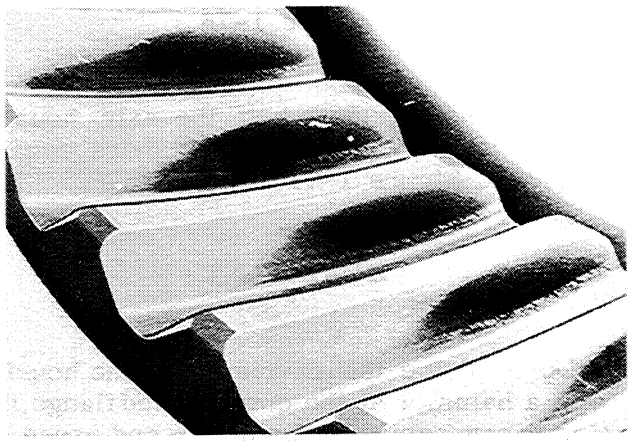

Figure T-75

A low contact indicates pinion is too deep. Set the pinion to the correct depth by adding shims under the pinion cage. Slight inward movement of the hypoid gear may be necessary to maintain correct backlash.

INSTALLATION OF THE DIFFERENTIAL ASSEMBLY INTO THE LOADER AXLE HOUSING

Before installing the differential assembly into the axle housing be sure the backlash is properly set and the pre-load on all bearings has been checked. Also clean the interior of the axle housing thoroughly to make sure there is no foreign material that may cause damage to the differential.

1. Install a new differential gasket over the housing studs.

2. A roller jack may be used to help position the differential assembly onto the axle housing studs, Figure T-76.

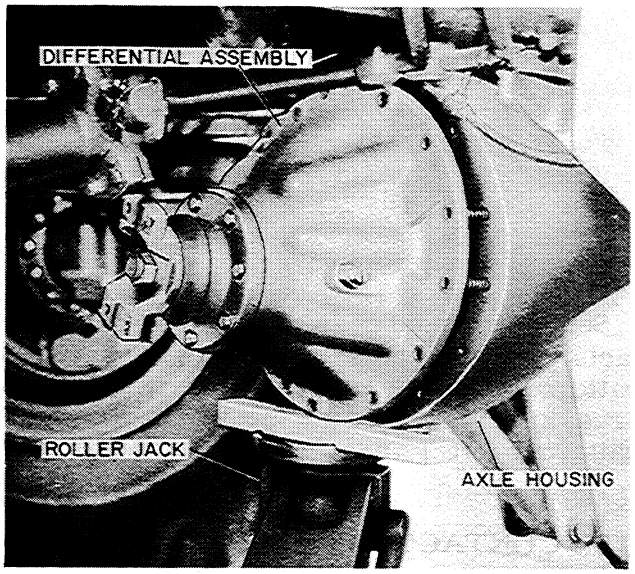

Figure T-76

3. Start the carrier into the axle housing with four stud nuts and washers equally spaced, Figure T-77.

IMPORTANT

Do not drive the carrier into the housing with a hammer at the carrier stud flange. The flange can easily be distorted and cause oil leakage.

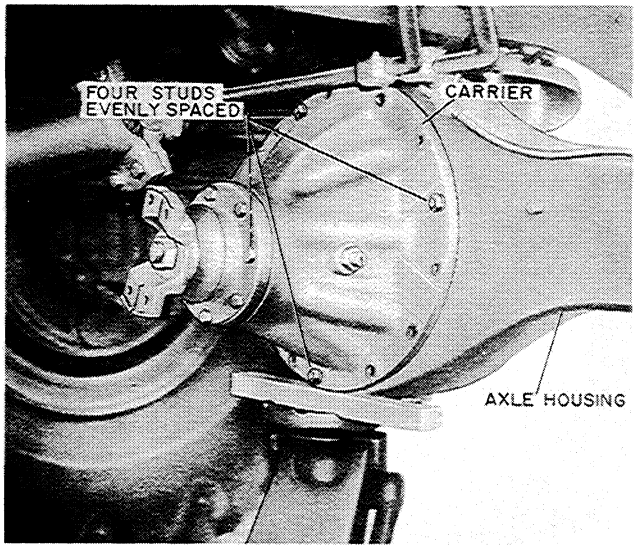

Figure T-77

4. Install all the stud nuts and torque evenly to:

A15-3200 Series differential 1/2" - 94 to 102 foot pounds.

A30 - 3200 Series differential 5/8" - 186 to 205 foot pounds.

INSTALLATION OF THE AXLE SHAFTS
Axle Shaft Installation - Rigid Axle

1. Grasp the sun gear and axle shaft, push inward until the axle slips into the differential side gear and is flush with the planetary pinion, Figure T-78.

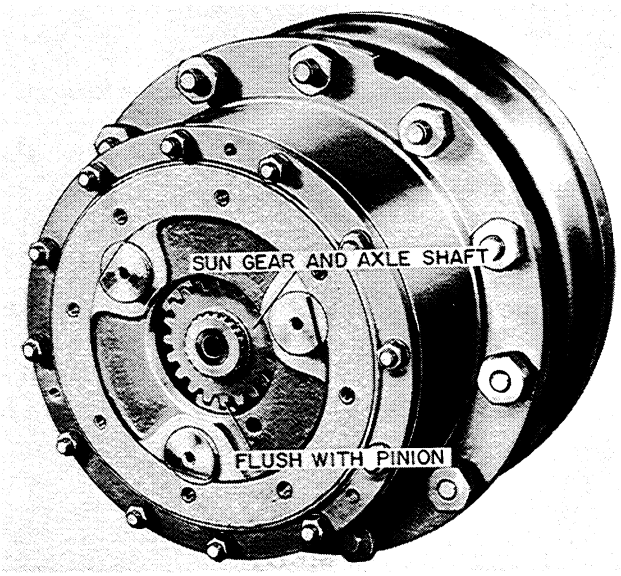

Figure T-78

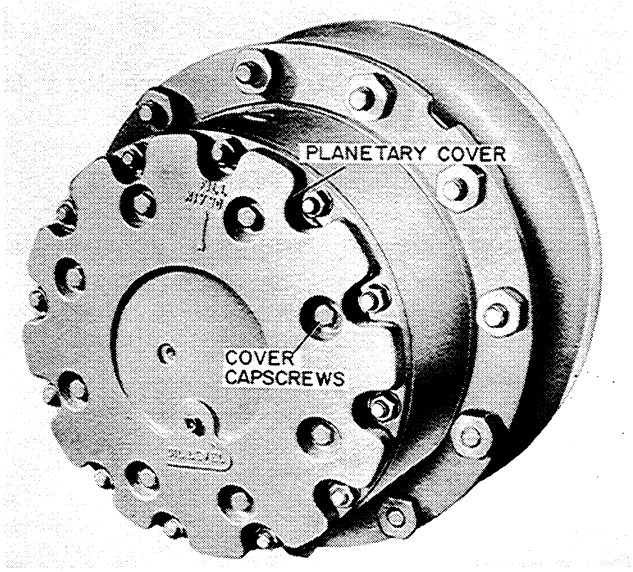

Figure T-79

2. Install the planetary cover and capscrews, torque the cover capscrews evenly to 54 to 58 foot pounds, Figure T-79.

Axle Shaft Installation Steering Axle

1. Push the wheel, planetary, socket and axle inward until the trunnion fits up against the axle housing. Install the trunnion stud nuts and torque evenly to 168 to 180 foot pounds, Figure T-80.

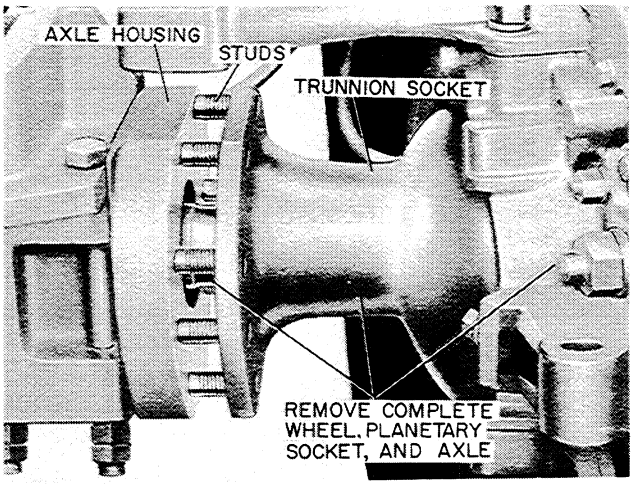

Figure T-80

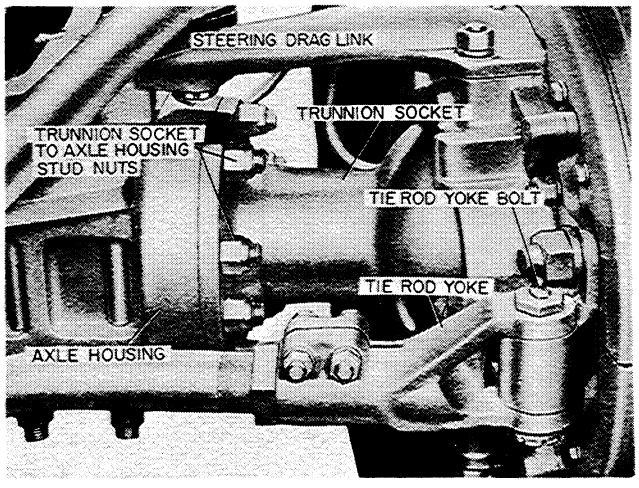

Figure T-81

2. Connect the tie rod and drag link, Figure T-81. Also refer to Section Q.

SERVICE SUGGESTIONS

Vibration

CAUSE	REMEDY
1. Vibration due to improper pre-load on ring gear.	1. Check end play and ring gear setting according to Page T-26.
2. Vibration due to worn bearings.	2. Replace worn bearings.
3. Vibration due to damaged gear teeth.	3. Replace any damaged gears.
4. Vibration due to loose pinion shaft nut (excessive end play and loose pinion shaft bearings).	4. Torque pinion shaft nut as described on Page T-22 (extensive damage to pinion shaft bearings and gear will result from a loose pinion shaft.)

Noise

CAUSE	REMEDY
1. Noise due to worn or damaged bearings.	1. Replace worn or damaged bearings.
2. Noise due to worn or damaged gears.	2. Replace worn or damaged gears.
3. Noise in turns due to worn or damaged spider, pinion (spider) gears or side gears.	3. Replace worn or damaged spider, pinions (spider) gears or side gears.
4. Noise due to worn differential thrust washers.	4. Replace thrust washers and worn parts.
5. Noise caused by improperly set backlash or pinion and ring gear tooth contact.	5. Check backlash and tooth contact as described on Pages T-26 and T-27.

Loss Of Lubrication

CAUSE	REMEDY
1. Loss of lubricant due to damaged bearing cover gasket or oil seal.	1. Replace bearing cover oil seal and gasket.
2. Loss of lubricant due to loose carrier stud nuts.	2. Torque carrier stud nuts to proper torque. Refer to Page T-28.
3. Loss of lubricant due to damaged carrier flange or cracked carrier.	3. Replace carrier if cracked or damaged.

REMOVAL OF THE DRIVE SHAFT AND UNIVERSAL JOINTS FROM THE LOADER

Care must be taken when removing and handling the drive shaft and universal joints. Careless handling may result in premature failure of these parts. Chips, dents, burrs or other disfigurations of the pilots of the drive shaft flanges will prevent accurate mating of the flanges with the cross and bearings. Misalignment between the cross, bearings and flanges will cause vibration and excessive wear during operation.

To remove the drive shaft and universal joints, proceed as follows:

1. Remove the cap screws from the differential yoke, Figure T-82.

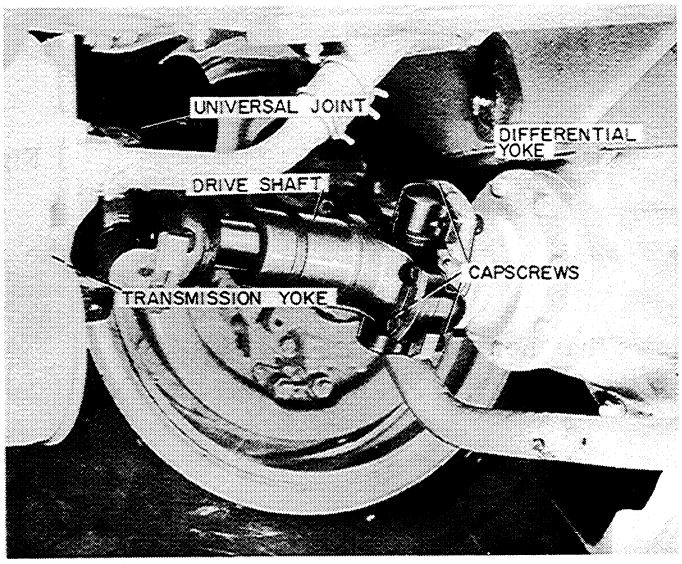

Figure T-82

2. Remove the cap screws from the transmission yoke, Figure T-82.

3. Remove the drive shaft. Sometimes the bearings stick tightly in the flanges and it will be necessary to tap with a soft hammer to unseat them. When doing this, partially support the drive shaft.

DISASSEMBLY OF THE UNIVERSAL JOINTS AND DRIVE SHAFT SLIP JOINTS

1. Bend the lock ring away from the capscrews Figure T-83.

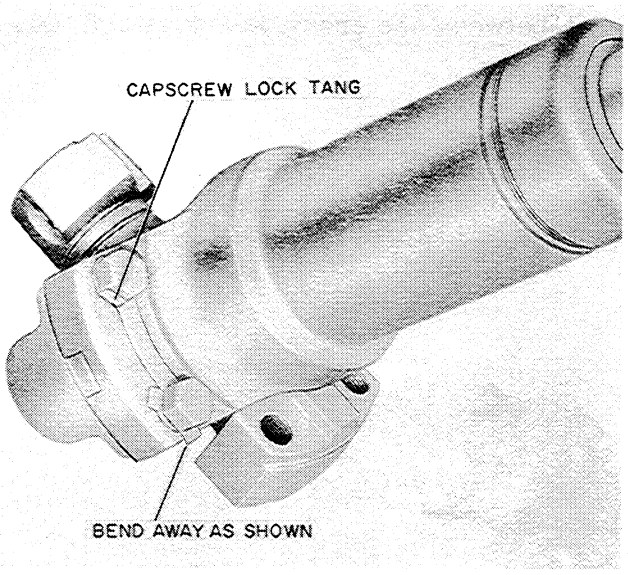

Figure T-83

2. Remove the capscrews that hold the universal joint to the drive shaft yoke, Figure T-84.

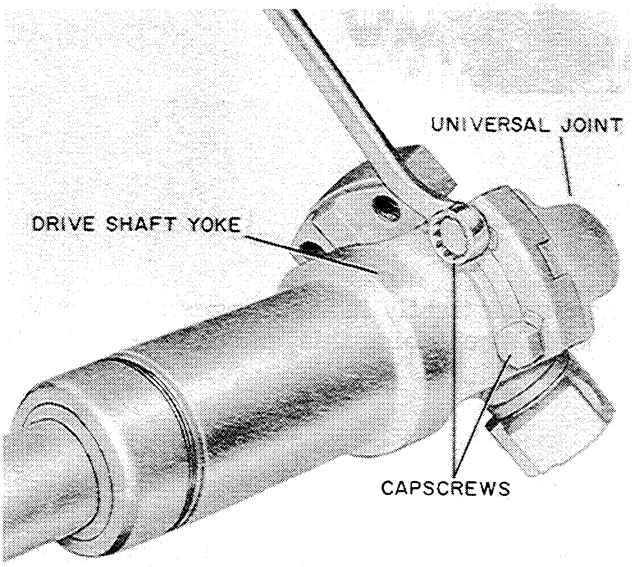

Figure T-84

3. Tap the top of the bearing at an angle if sealed to the yoke, Figure T-85.

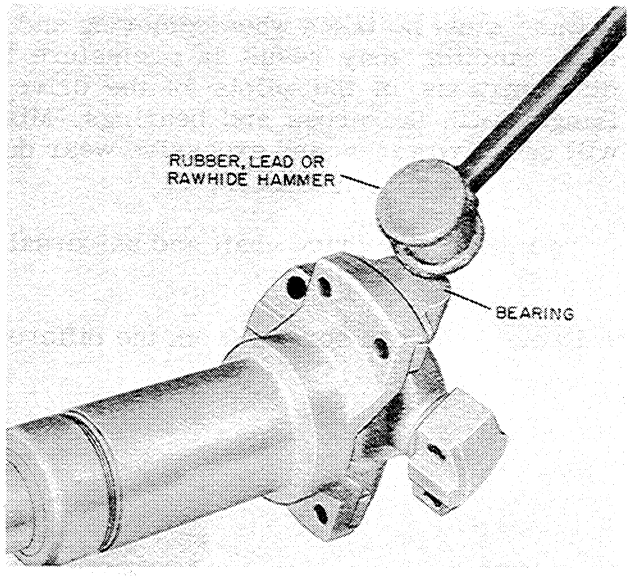

Figure T-85

4. Now remove the retainer, outer retainer washer, felt washer and inner retainer washer from the slip yoke, Figure T 86.

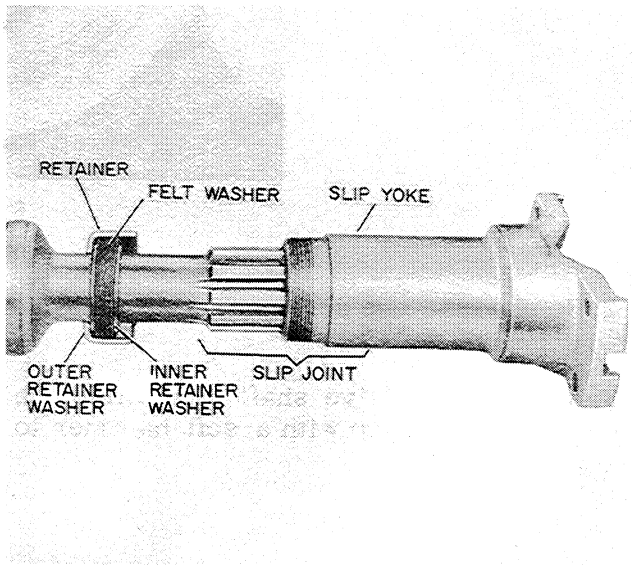

Figure T-86

5. Now the slip joint can be seperated for cleaning and inspection.

INSPECTION OF THE DRIVE SHAFT AND UNIVERSAL JOINTS

After the Drive Shaft and Universal Joints have been disassembled, all parts must be thoroughly cleaned in mineral spirits and inspected. All damaged or worn parts must be replaced during assembly.

The Drive Shaft

The Drive Shaft Assembly, Figure T-87, must be carefully inspected for cracked or broken splines that may cause binding of the slip joint. Anytime the drive shaft is disassembled a new felt washer must be installed.

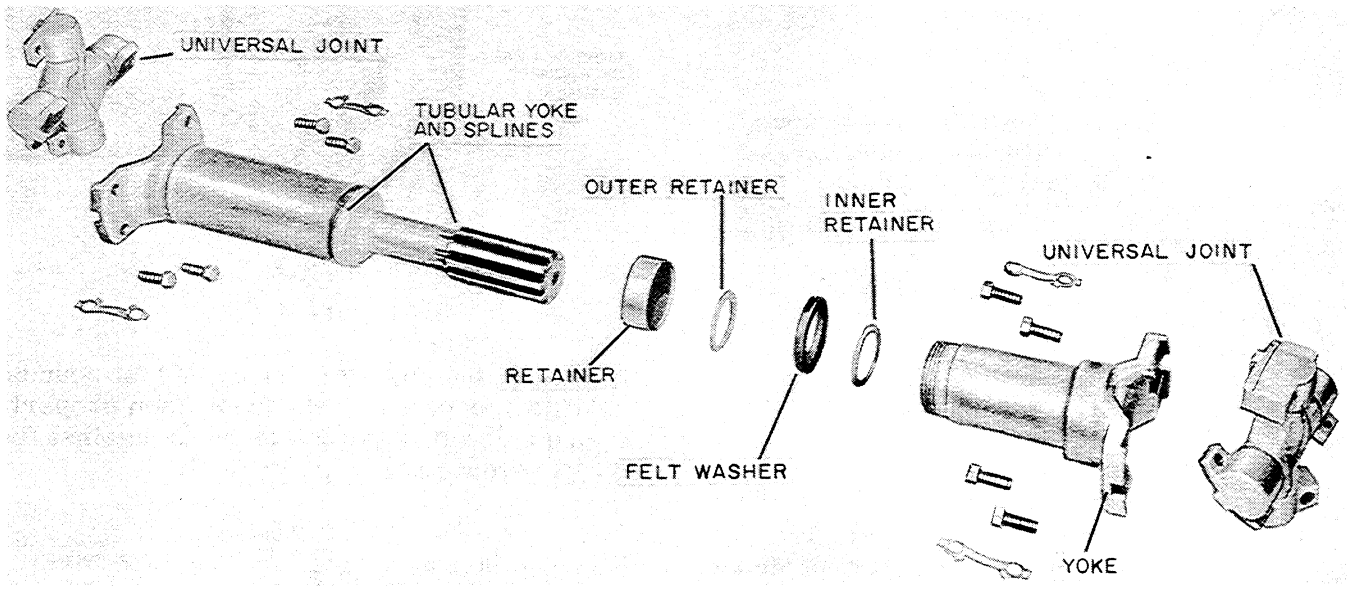

Figure T-87

The Universal Joint assembly, Figure T-87, must be carefully inspected for cracks, burrs and worn bearings. If the cross is cracked or the bearings worn the complete assembly must be replaced. If any burrs are found on the bearing housing mounting flange they can be removed. Anytime the universal joint is disassembled the cork washers, must be replaced.

ASSEMBLY OF THE DRIVE SHAFT AND UNIVERSAL JOINT

Before starting to reassemble the drive shaft and universal joints make sure all parts have been thoroughly cleaned, inspected and all worn or damaged parts replaced.

Assembly Procedure

1. Place a retainer, retainer washer, felt washer and retainer washer over the splined end of the tubular yoke, Figure T-88.

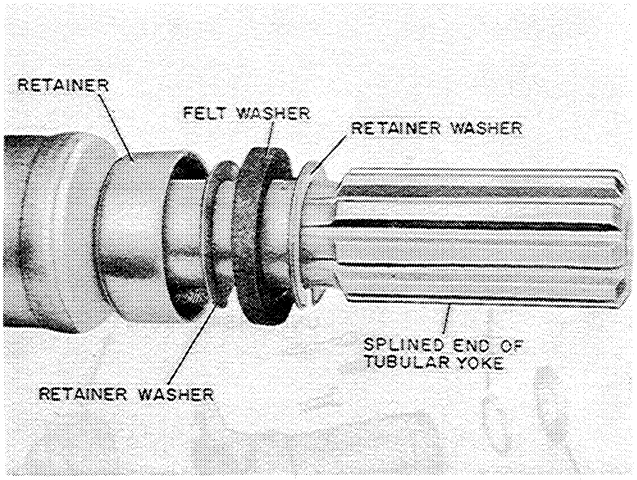

Figure T-88

2. Apply a liberal amount of lubricating grease to the splines then slide the two halves together and install the washers and retainer onto the slip yoke in the order shown in Figure T-89.

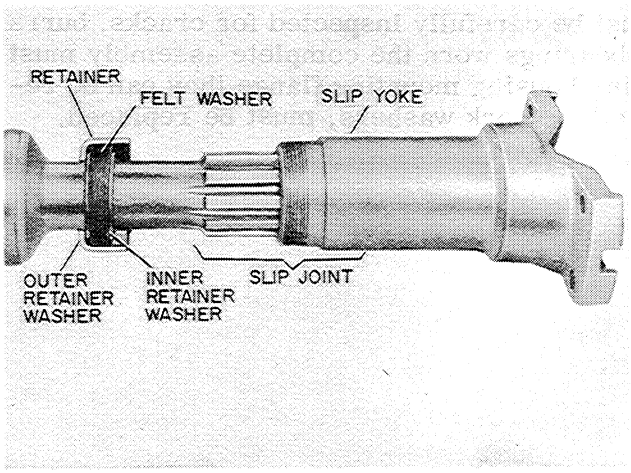

Figure T-89

3. Install the universal joint onto the drive shaft yokes, Figure T-90. Tap lightly to insure proper seating, Figure T-90.

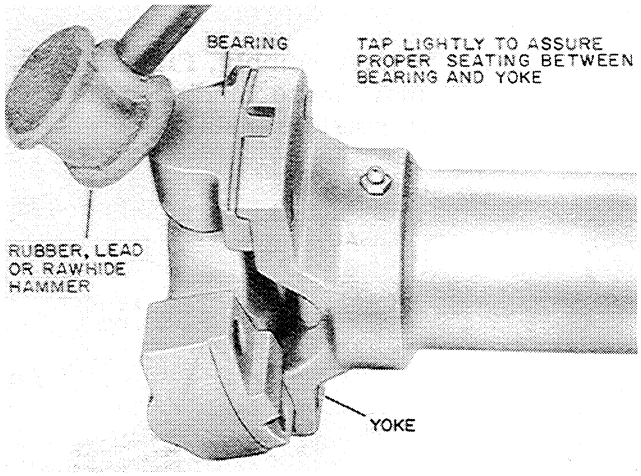

Figure T-90

4. Torque the cap screws to 90 foot pounds. After the cap screws have been properly torqued bend the lock tange up against the cap screw head, Figure T-91.

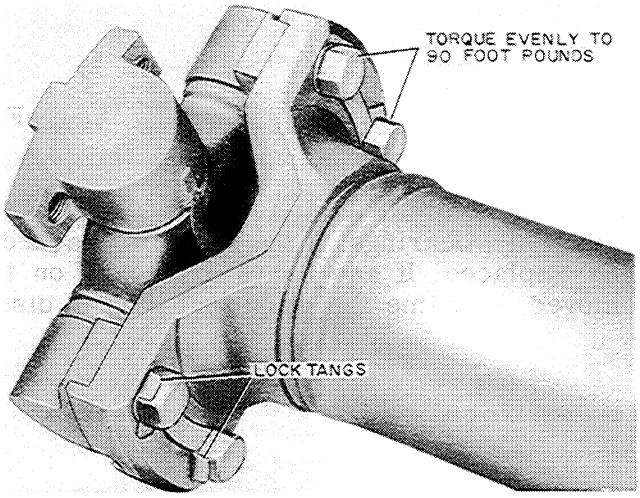

Figure T-91

INSTALLATION OF THE DRIVE SHAFT AND UNIVERSAL JOINTS ONTO THE LOADER

Before installing the drive shaft and universal joints onto the loader, make sure there are no burrs on either the transmission output yoke or the differential yoke. Burrs on either yoke may cause improper seating of the universal joints and excessive wear and vibration during operation.

Installation of the Drive Shaft Assembly

1. Install the universal joint to the differential yoke and torque the capscrews to 90 foot pounds, Figure T-92.

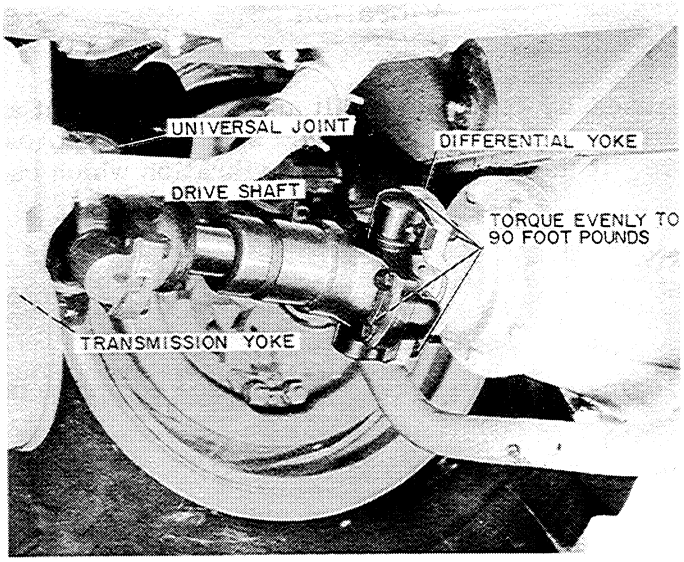

Figure T-92

2. Install the universal joint to the transmission yoke and torque the capscrews to 90 foot pounds, Figure T-92.

DRIVE SHAFT LUBRICATION

Lubricate drive shaft (1 stroke each fitting - DO NOT OVERLUBRICATE).

SERVICE SUGGESTIONS

Lubrication

CAUSE	REMEDY
1. Wear due to lack of proper lubrication.	1. Lubricate every 500 hours with a No. 1 Gun grease.
2. Damaged universal joint bearing seals due to over lubricating.	2. One stroke every 500 hours to prevent damaging seals. DO NOT overlubricate.
3. Loss of lubrication due to damaged universal joint bearing seals.	3. Replace damaged seals.

Vibration

Noise and vibration caused by the drive shaft and universal joint assembly appear only at certain speeds and generally come and go as these speeds are approached and passed. When noise becomes excessive, it takes the form of vibration which can be felt throughout the frame.

CAUSE	REMEDY
1. Vibration caused by damaged universal joint bearings.	1. Replace complete bearing assembly.
2. Vibration caused by loose drive shaft mounting bolts.	2. Remove mounting bolts, inspect for wear and replace if damaged. Torque evenly to 90 foot pounds.
3. Vibration caused by a sprung drive shaft.	3. Replace drive shaft.

NOTE: CASE CORPORATION **reserves the right to make improvements in design or changes in specifications at any time without incurring any obligation to install them on units previously sold.**

SECTION
T

Supplement No. 1

SERVICING THE SINGLE - REDUCTION (A34-3200 Series) DIFFERENTIALS ON CASE 4 WHEEL DRIVE UNIT LOADERS

TABLE OF CONTENTS

INTRODUCTION - (General) . . . . . T-3 thru T-4

THE DIFFERENTIAL . . . . . T-5 thru T-8

General T-5
How It Works T-6
Identification (Differentials) T-39
Identification (Axle and Differential) T-39

DIFFERENTIAL (Removal and Disassembly) . . . . . T-9 thru T-17

Removal . . . . . T-9 thru T-11
Disassembly of the Differential Carrier . . . . . T-12 thru T-13
Disassembly of the Differential Case and Gear Assembly T-14
Removal and Disassembly of the Pinion and Bearing Cage . . . . . T-15 thru T-16

DIFFERENTIAL RING GEAR REMOVAL AND REPLACEMENT T-17

Torque Specification (A34 - 3200 Series Differential) T-40

DIFFERENTIAL - (Inspection) . . . . . T-18 thru T-19

DIFFERENTIAL (Re-Assembly and Installation) . . . . . T-20 thru T-28

Assembly of the Pinion and Cage Assembly . . . . . T-20 thru T-22
Pinion Bearing Pre-Load (A34 - 3200 Series Differential) T-40
Assembly of the Differential Pinion, Side Gears and Case Halves . T-23 thru T-24
Case Halve Bolt Torque Specifications (A34 - 3200 Series Differential) . . . T-40
Installation of the Differential and Gear Assembly T-25
Bearing Cap Torque Specifications (A34 - 3200 Series Differential) T-40
Adjusting the Differential Bearing Pre-Load T-26
Correct Tooth Contact T-27
Installation of the Differential Assembly Into the Loader Axle Housing . . . T-28
Differential Housing Nut Torque Specifications T-40
Installation of the Axle Shafts T-29

SERVICE SUGGESTIONS T-30

DRIVE SHAFTS - (Removal and Disassembly) . . . . . T-31 thru T-32

Removal of the Drive Shaft and Universal Joints T-31
Disassembly of the Universal Joints and Drive Shaft T-32

DRIVE SHAFT - (Inspection) T-33

DRIVE SHAFT - (Re-Assembly and Installation) . . . . . T-34 thru T-35

Assembly of the Drive Shaft and Universal Joints T-34
Installation of the Drive Shaft and Universal Joints T-35

SERVICE SUGGESTIONS T-36

IDENTIFICATION OF AXLES AND DIFFERENTIALS

Case Four Wheel Drive Unit Loaders use different models of axles. The axle model can be identified by the identification plate attached to the axle housing.

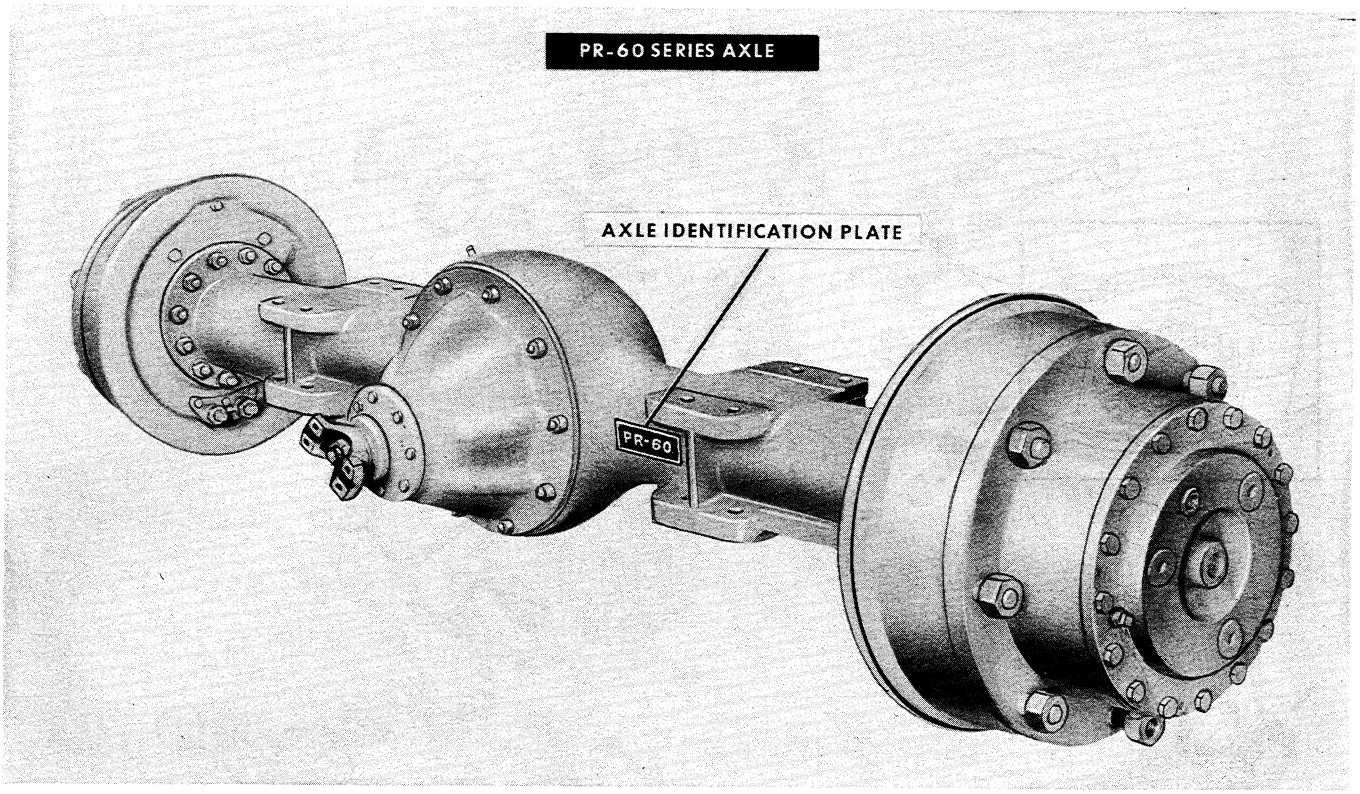

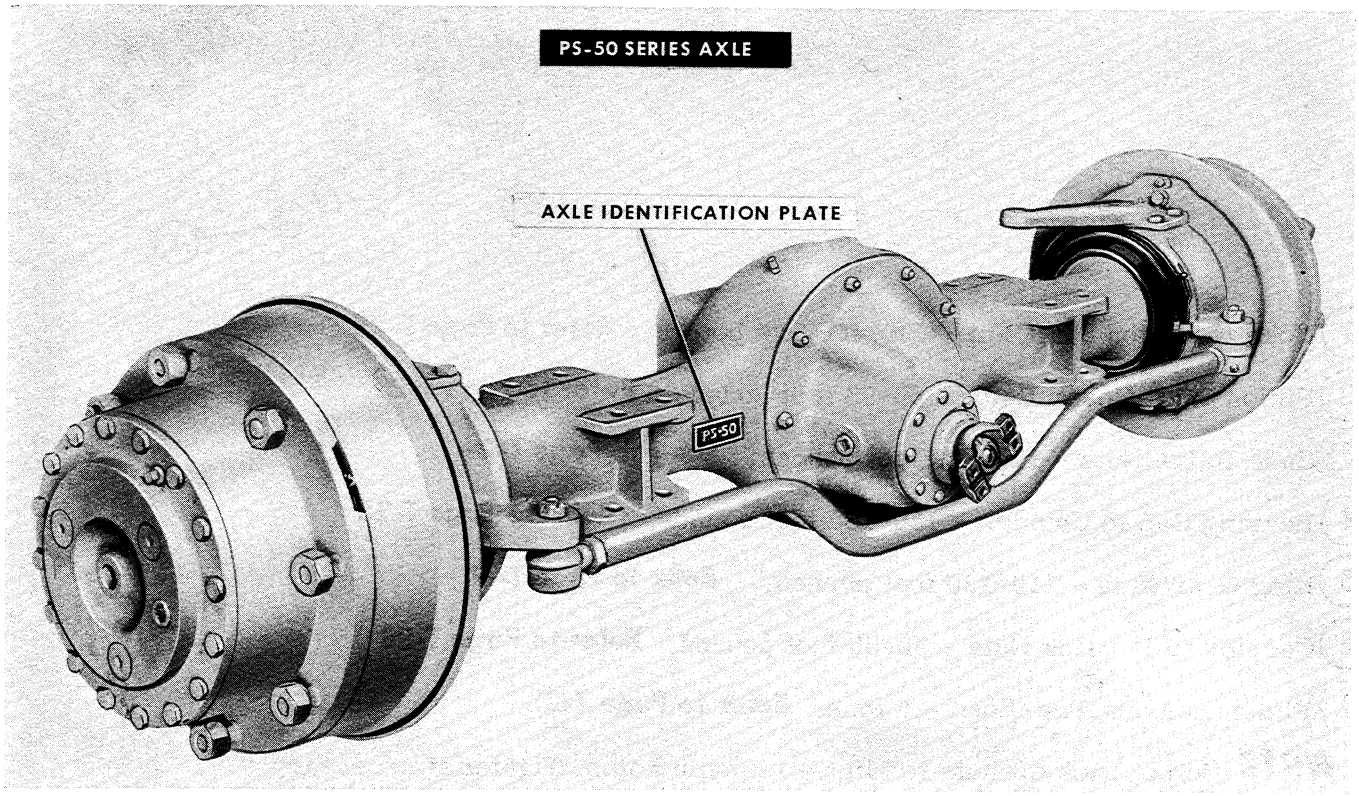

SERVICING THE PS-50 AND PR-60 AXLE DIFFERENTIALS

The procedure for the PS-50 and PR-60 Series Axle Differentials are the same as described in Section T, except for the following torque and bearing pre-loads.

The torque and bearing pre-loads are as follows:

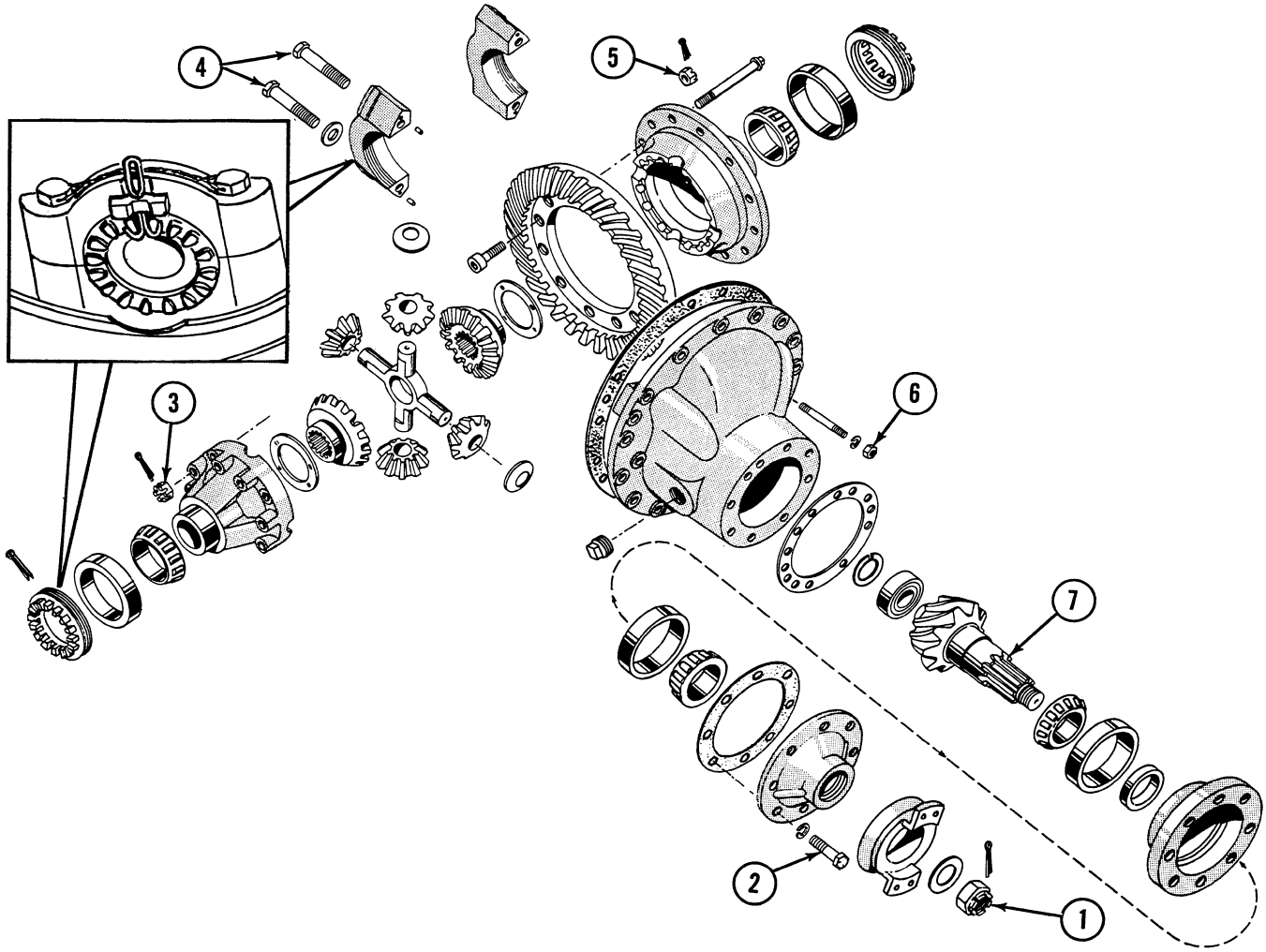

(1) Yoke to Pinion Shaft Nut - 300-400 foot pounds. **Refer to Page T-22**

(2) Pinion Shaft Cover Bolts - 30-35 foot pounds. **Refer to Page T-22**

(3) Case Halve Nuts - 110-120 foot pounds. **Refer to Page T-24**

(4) Bearing Cap to Carrier - 150-180 foot pounds. **Refer to Page T-25**

(5) Ring Gear Nuts - 110-120 foot pounds. **Refer to Page T-17**

(6) Carrier to Housing Nuts - 50-55 foot pounds. **Refer to Page T-28**

(7) Pinion Bearing Pre-Load - 6 tons. **Refer to Page T-21**

NOTE Do not back off nuts to align cotter pin holes. Tighten if necessary.

SECTION

U

SERVICING THE

PLANETARIES

AND

AXLES

(PS and PR 100, 150 and 200 Series)

ON

CASE 4 WHEEL DRIVE

UNIT LOADERS

Rac. Form 9-74561 Section U 2000 12-60 PRINTED IN U.S.A.

TABLE OF CONTENTS

INTRODUCTION (General) ---------- U-3 thru U-7

Why Planetary Drives ---------- U-3 thru U-4
The Planetaries (General) ---------- U-5
The Planetaries (How It Works) ---------- U-6

IDENTIFICATION OF AXLES AND PLANETARIES ---------- U-7

REMOVAL AND DISASSEMBLY OF THE PLANETARY SYSTEM ----- U-8 thru U-14

Removal and Disassembly of Planetary Housing (Both Rigid and Steering) ---------- U-8 thru U-10
Removal and Disassembly of the Spindle Hub (Rigid Axle Only) ---------- U-11
Removal and Disassembly of the Spindle Hub and (Rzeppa) Universal Joint (Steering Axle Only) ---------- U-12 thru U-14

INSPECTION ---------- U-15 thru U-17

Rzeppa Universal Joint Inspection (Steering Axle Only) ---------- U-15
Planetary Inspection (Both Rigid and Steering) ---------- U-16 thru U-17

REASSEMBLY OF THE PLANETARY SYSTEM ---------- U-18 thru U-26

Reassembly of the Trunnion Socket and Flanges (Steering Axle Only) ------- U-18
Adjusting Trunnion Socket Bearing Pre-load and Centering Flanges (Steering Axle Only) ---------- U-19
Reassembly of the Rzeppa Universal Joint and Spindle Hub -------- U-20 thru U-21
Reassembly and Installation of the Spindle Hub (Rigid Axle Only) ---------- U-22
Reassembly of the Planetary Housing (Both Rigid and Steering Axles) ---------- U-23 thru U-26

WHEEL BEARING ADJUSTMENT (Both Rigid and Steering Axles) ---------- U-24

LUBRICATION ---------- U-26

SERVICE SUGGESTIONS ---------- U-27

INTRODUCTION
General

Case Four Wheel Drive Unit Loaders are equipped with Planetary Axles which provide two speed reductions between the transmission and wheels. These Planetary Axles incorporate a single reduction bevel hypoid gear differential in the center of the axle, and single reduction planetary design spur gearing built into the wheel hubs.

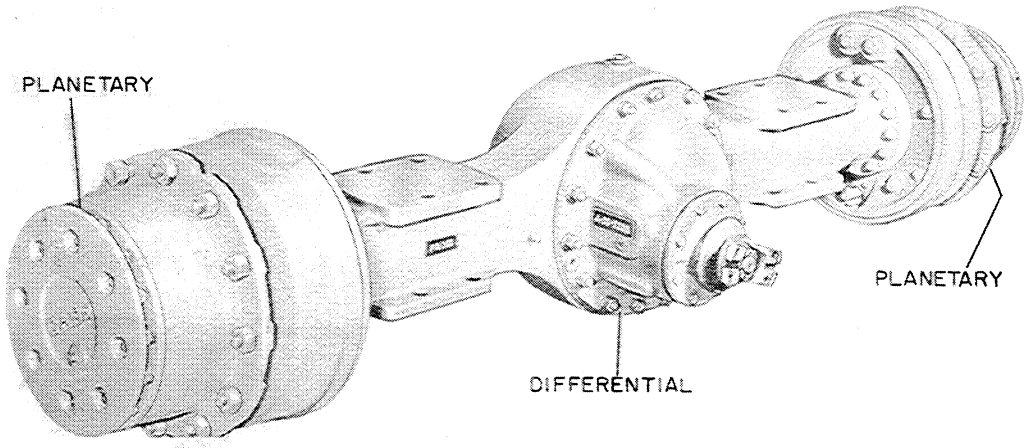

Figure U-1

This Section (U) of the Service Manual covers only the Servicing of the Single Reduction Planetary Gearing and Axle Shaft. Section T covers the Servicing of the Bevel Hypoid Gear Differential.

WHY PLANETARY DRIVES ?

To fully understand the purpose and function of the Planetary Axle System, we must first look at its position and function in the power train.

The Torque (or turning ability) of the engine must be delivered to the point where it will be used - the drive wheels.

In order to use a compact efficient engine and power train, it will be necessary to multiply this engine torque several times before it gets to the drive wheels. This torque multiplication takes place in the torque converter, transmission and planetary axle system.

Let's take a quick look at these torque multipliers.

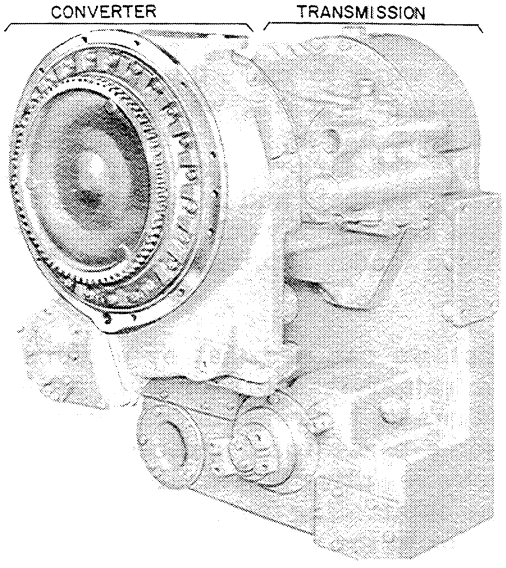

Figure U-2

Converter - The Converter, Figure U-2, multiplies torque hydraulically - it can increase engine torque as much as 3-1/2 times. Refer to Section S for a complete discussion of the torque converter.

Transmission - The Transmission, Figure U-2, increases torque through reduction gearing. Whenever gears are used to increase torque - speed is decreased proportionally to the torque increase. The maximum gear reduction of the transmission in low gear is approximately 5.3 to 1.

Differential - The Differential, Figure U-3, also increases torque through gear reduction. This further gear reduction is approximately 5.3 to 1.

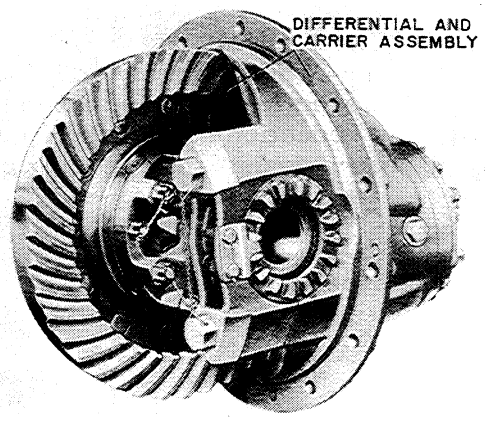

Figure U-3

Planetaries - The Planetaries, Figure U-4, also use gear reduction to multiply torque. This reduction is approximately 3.3 to 1.

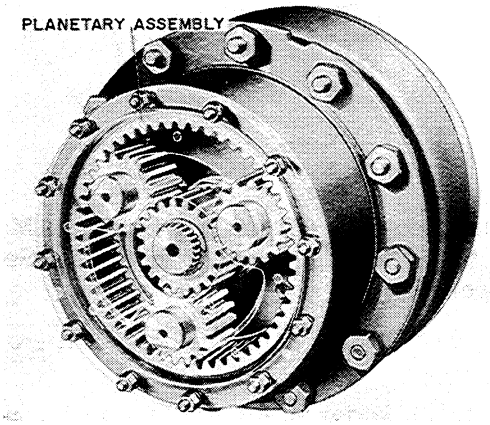

Figure U-4

The total gear reduction to obtain maximum torque at the drive wheels is 92 to 1. This means that 92 revolutions of the transmission input shaft results in 1 revolution of the wheels.

If we were to make this 92 to 1 reduction with only two gears, we would have a small drive gear having 10 teeth and a 4 inch diameter - the large gear would have approximately 940 teeth and be 12 feet in diameter, Figure U-5. This would be rather impractical for a loader application.

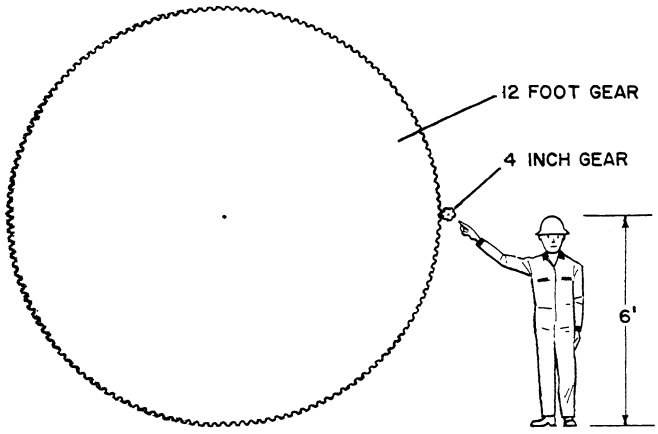

Figure U-5

Thus we can see that by performing this torque multiplication at four points in the power train rather than one or two, we eliminate the use of large cumbersome parts which would be required to transmit the higher torque to its point of application. Use of these large cumbersome parts would unnecessarily increase the weight the engine would have to haul around, thereby resulting in a smaller portion of the engine power being used for moving the pay load.

The outstanding feature of the planetary axle is its ability to perform the final torque multiplication at the point which the torque is applied - the drive wheels.

Now that we have some idea as to the purpose of the planetary axle system, let's take a closer look at just what part the planetary gearing has in this system.

THE PLANETARIES
General

The planetary gearing is located in the axle hub. This location permits the differential and axle shafts to carry only a nominal torsional load while providing the highest practical gear reduction at the wheels.

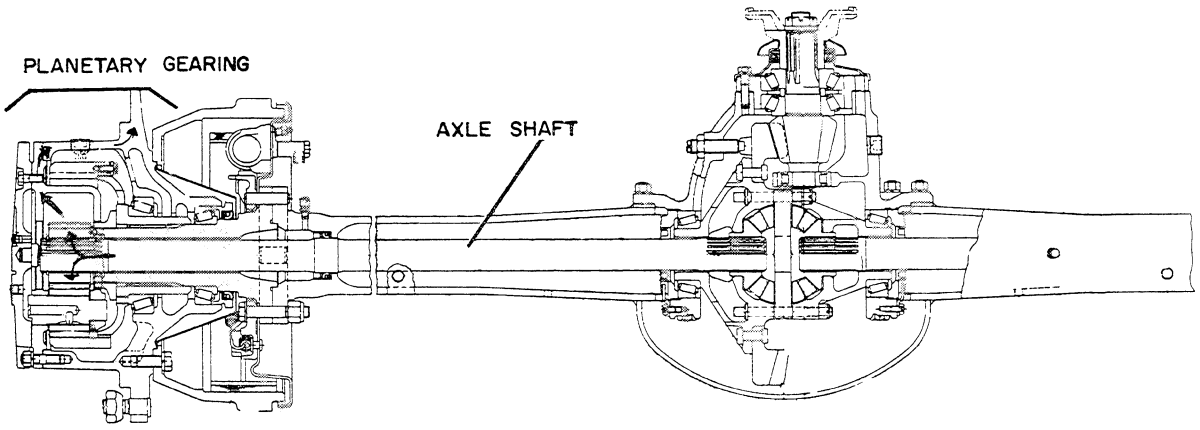

Figure U-6

Before discussing how a planetary works let's first get some idea of the name and location of the parts involved.

Axle Shaft - The power train from the differential to the planetary is connected by the axle shaft. One end of the axle shaft is splined and driven by the differential side gear. The other end of the axle is also splined and drives the sun gear in the planetary housing.

Sun Gear - Is splined to the outer end of the axle shaft and drives the planetary pinions. The sun gear and axle float - allowing them to follow the same path as the planetary pinions, permitting uniform loading of all the planetary gears

Planetary Pinions - Are driven by the sun gear and revolve inside the ring gear driving the planetary spider. The pinion gears are held to the spider by the planetary pinion shafts.

Floating Ring Gear - is retained on the ring gear carrier by internal teeth that prevent the ring gear from turning - a pre-determined clearance between the internal teeth allow the ring gear to float into the exact orbit of the three planetary pinions and insure uniform loading of the planetary gears. The reason uniform loading is important at this point is, that the ring gear is used as a fulcrum by the pinion gears when they move the planetary spider.

Planetary Spider - driven by the pinion gears - the spider in turn drives the planetary housing and wheel hub.

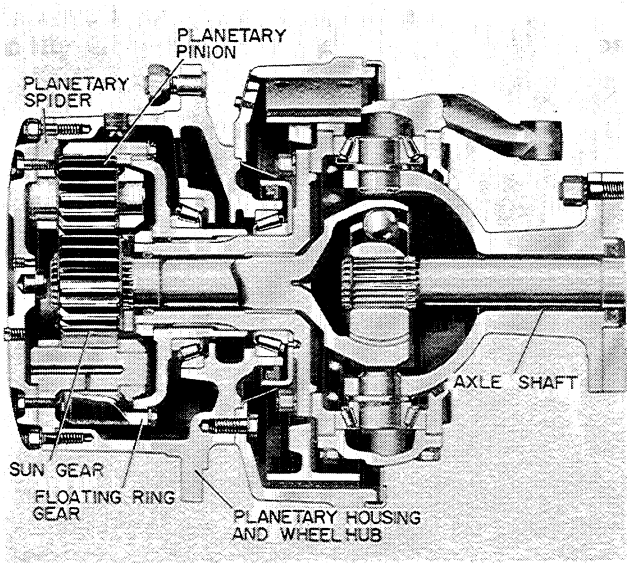

Figure U-7

THE PLANETARIES

"How It Works"

The power is received from the engine through the transmission to the differential pinion. The differential pinion drives the differential ring gear. The differential ring gear is attached to the differential case half - therefore whenever the ring gear turns the case half, side gears and pinions (which are in the case half,) also turn. As this differential assembly rotates the differential pinions divide the power to both the left hand and right hand axle shafts.

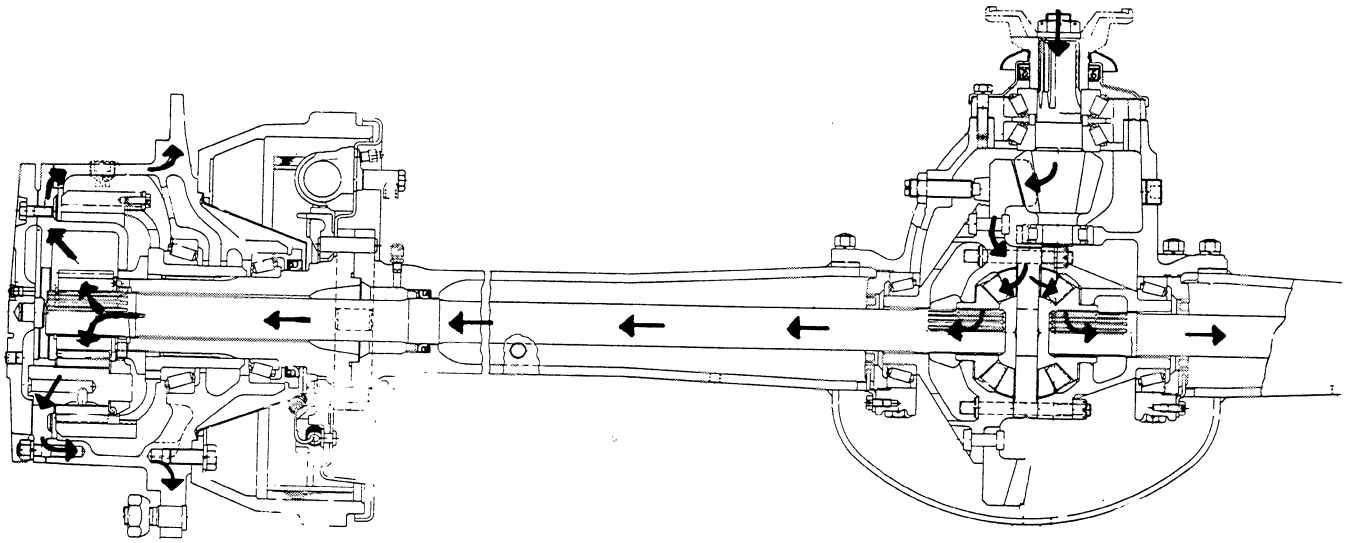

Figure U-8

The power is then transmitted through the axle shafts to the sun gear. The sun gear turns the planetary pinion gears which in turn reacts against the ring gear and turns the planetary spider. As the spider turns it moves the planetary housing and wheel hub.

Identification of Axles and Differentials

Case Four Wheel Drive Unit Loaders use several different models of axles. To identify these different models of axles see below:

Axle Identification

The axle model can be identified by either an identification plate attached to the axle housing (recent production axles only) or by their differential number and appearance of the planetary housing cover. Refer to Figures U-9 thru U-14.

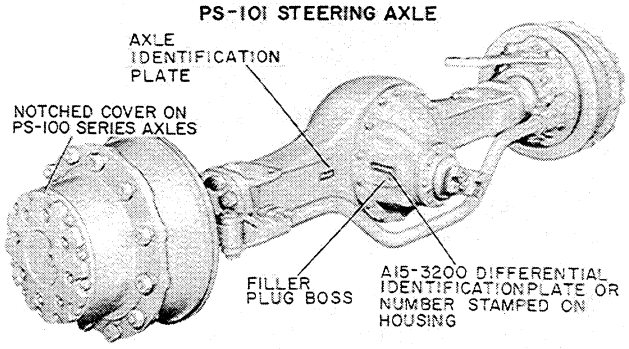

Figure U-9. PS-101 Steering Axle

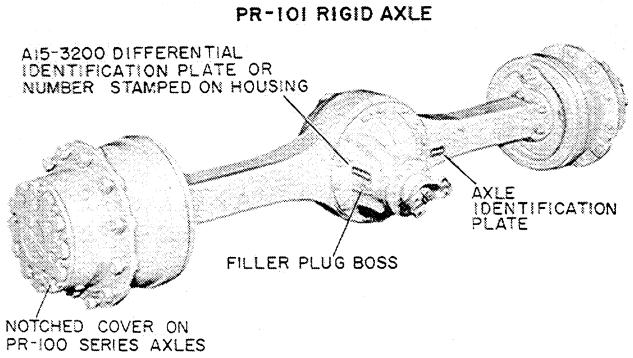

Figure U-10. PR-101 Rigid Axle

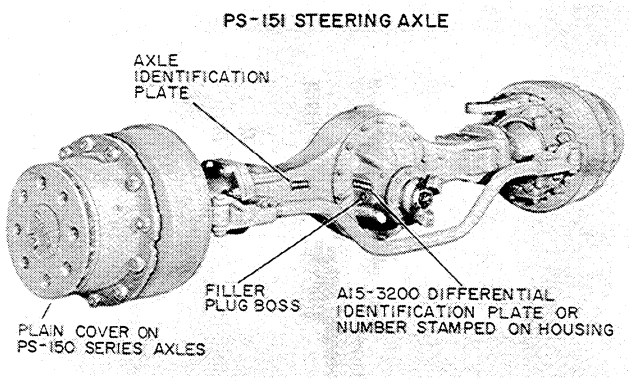

Figure U-11. PS-151 Steering Axle

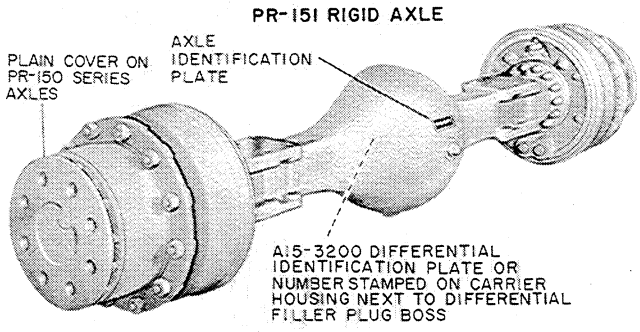

Figure U-12. PR-151 Rigid Axle

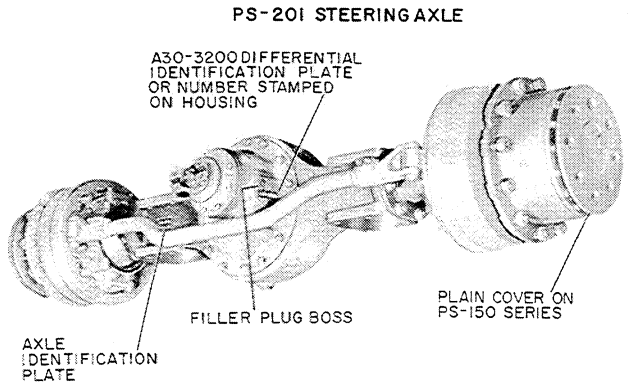

Figure U-13. PS -201 Steering Axle

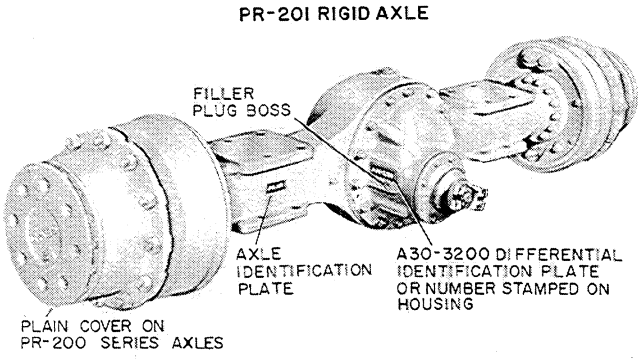

Figure U-14. PR-201 Rigid Axle

The service procedure for all Steering and Rigid Axles in all sizes is the same except where otherwise noted.

PLANETARY ASSEMBLY (General)

Before starting the disassembly of either the Planetary Steering Type or Planetary Rigid Type Axles, the following procedure and precautions must be taken:

1. Thoroughly steam clean the exterior of the planetary housing and wheels to prevent dirt from entering the planetary gears during disassembly.

2. Raise up both wheels so that the tires clear the ground or floor. Due to the extreme weight of the loaders on which planetary type axles are used, the axle must be blocked up to safely support the weight of the loader.

3. Remove the wheel nuts, tire and wheel.

4. Rotate the planetary assembly so the drain plug is at the bottom. Remove the plug and drain the planetary lubricant.

REMOVAL AND DISASSEMBLY OF PLANETARY HOUSING (Both Rigid and Steering Axles)

1. Remove the planetary wheel cover capscrews and cover, Figure U-15.

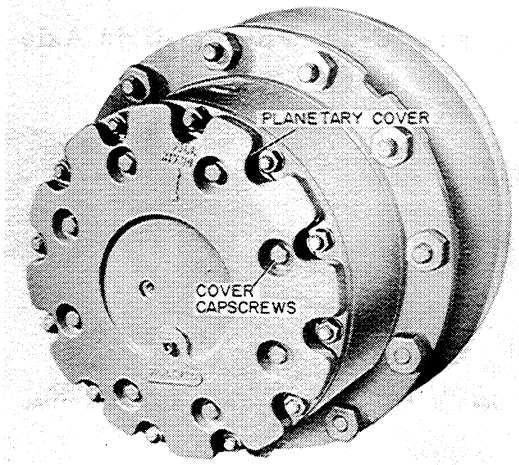

Figure U-15

2. Remove the planetary spider capscrews and lock washers, Figure U-16. The spider assembly can now be removed using puller screws in the holes provided, Figure U-16.

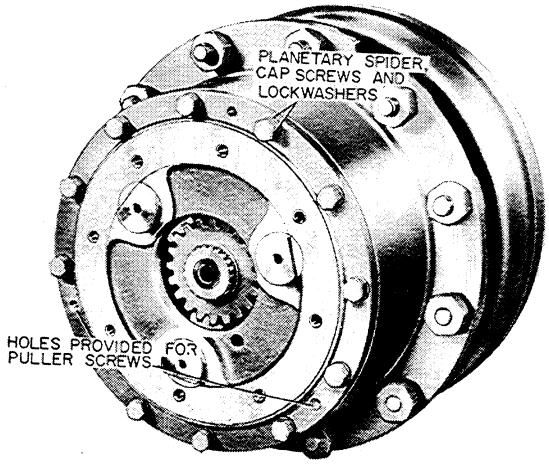

Figure U-16

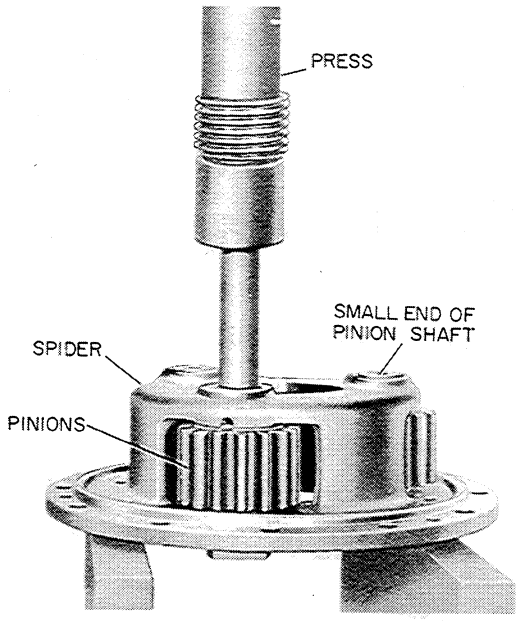

Figure U-17

3. To remove the planetary pinions from the spider press out the pinion shafts by pressing on the small end, Figure U-17.

4. Then remove the pinions and the special thrust washer, Figure U-18.

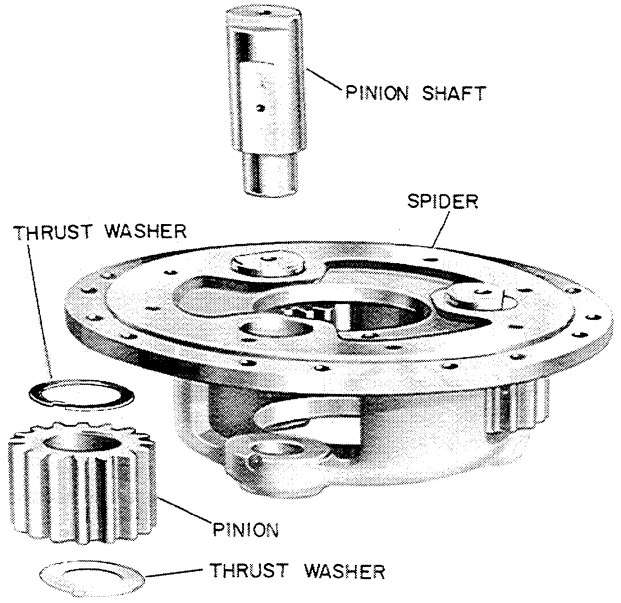

Figure U-18

5. Remove the snap ring from the end of the axle shaft , Figure U-19. The planetary sun gear and thrust washer can then be sliped off the axle shaft, Figure U-19.

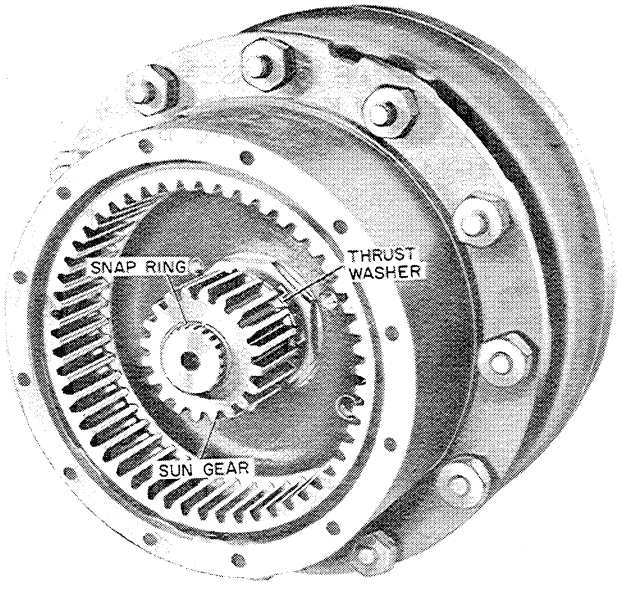

Figure U-19

6. On the rigid axles the axle shaft can now be removed.

7. Remove the wheel bearing adjusting nut lock, Figure U-20.

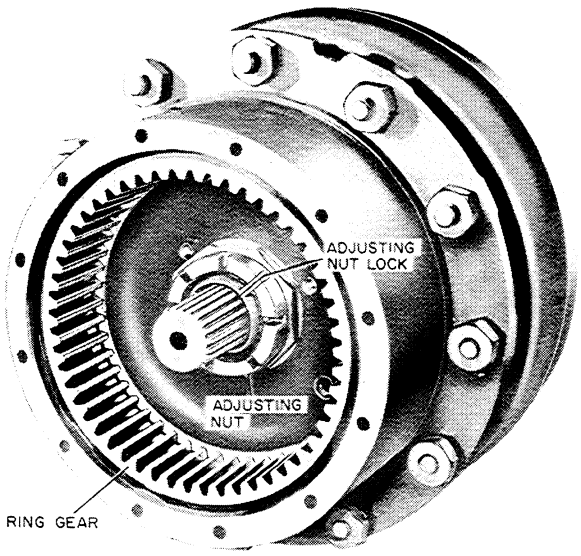

Figure U-20

8. Remove the wheel bearing adjusting nut, Figure U-20.

9. Remove the floating ring gear assembly using puller screws in the holes provided, Figure U-21. The capscrews from the planetary spider can be used for removal of the ring gear.

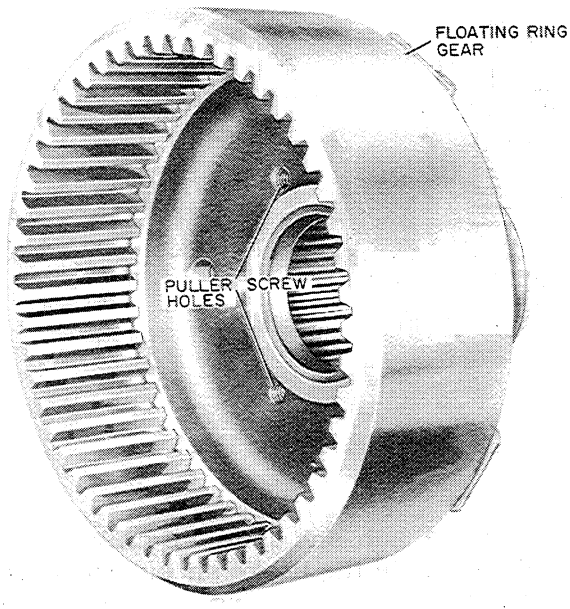

Figure U-21

10. To seperate the ring gear and ring gear hub, remove the lockwire, capscrews and plates, Figures U-22 and U-23.

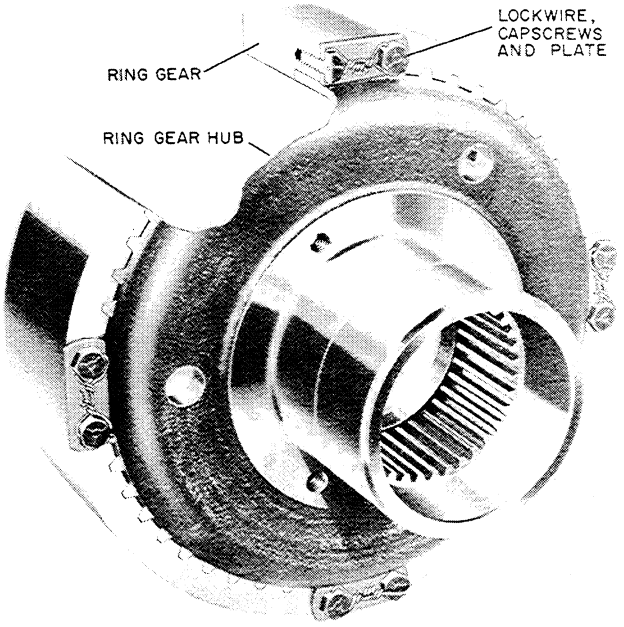

Figure U-22

11. Remove the outer wheel bearing from the ring gear hub, Figures U-22 and U-23. The bearing must be a slip fit.

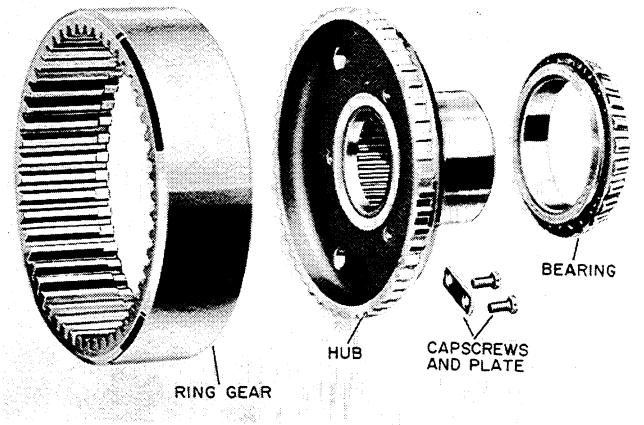

Figure U-23

12. Lift the hub and drum slightly to relieve the drag on the brake shoes. Then remove the planetary housing and brake drum from the hub spindle, Figure U-24.

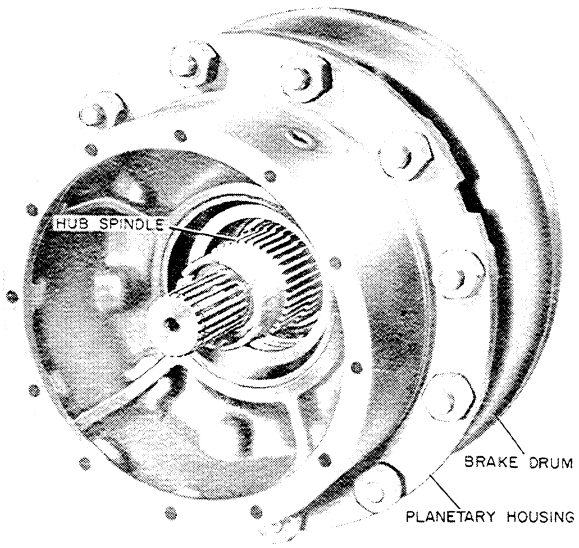

Figure U-24

13. For removal of the brake shoe and lining refer to Section W or WW of this Service Manual.

FOR COMPLETE DISASSEMBLY OF THE RIGID AXLE (PR MODELS) PROCEED AS DIRECTED ON PAGE U-11.

FOR COMPLETE DISASSEMBLY OF THE STEERING AXLE (PS MODELS) PROCEED AS DIRECTED ON PAGES U-12 THRU U-14.

REMOVAL AND DISASSEMBLY OF THE SPINDLE HUB

(Rigid Axle Only)

1. The spindle oil seal and retainer are pressed into the hub and drum, Figure U-25. Remove, using two roll bars as shown in Figure U-25. Then the inner bearing can be removed.

2. Remove the hub spindle bolts, nuts and lock washers. Then remove the spindle hub, Figure U-26. The planetary housing on the rigid axle is now completely removed and disassembled.

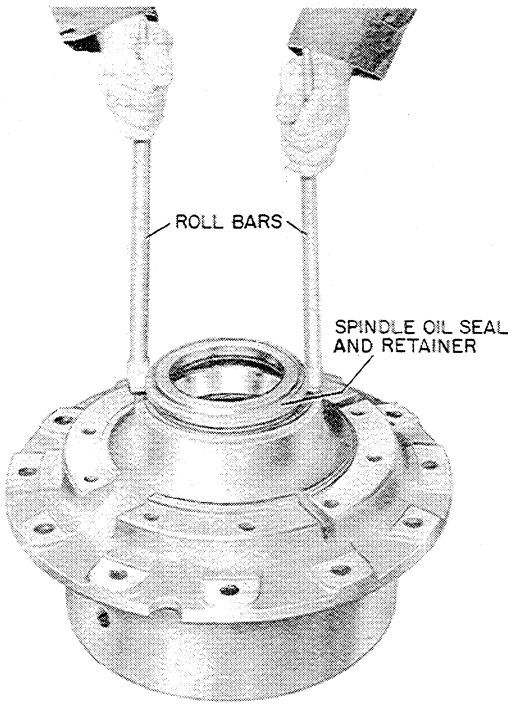

Figure U-25

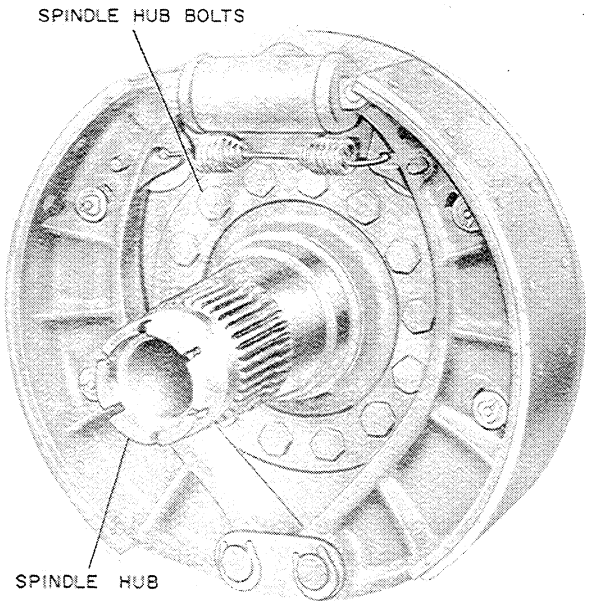

Figure U-26

REFER TO PAGE U-12 THRU U-14 FOR THE COMPLETE STEERING AXLE RZEPPA UNIVERSAL JOINT REMOVAL AND DISASSEMBLY.

REMOVAL AND DISASSEMBLY OF THE SPINDLE HUB AND (RZEPPA) UNIVERSAL JOINT

(Steering Axle Only)

1. Remove the inner bearing, oil seal and retainer from the spindle, Figure U-27.

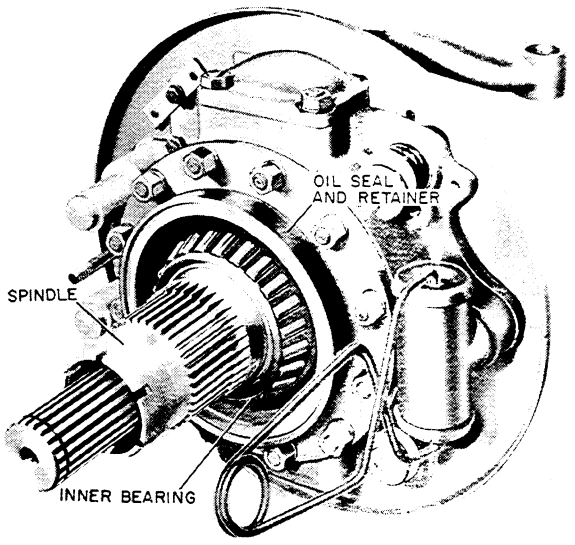

Figure U-27

2. Also remove the spindle stud nuts and washers, Figure U-27. Then slip the spindle off the axle shaft, Figure U-27.

3. Now remove the axle shaft and universal joint assembly from the axle housing, Figure U-28.

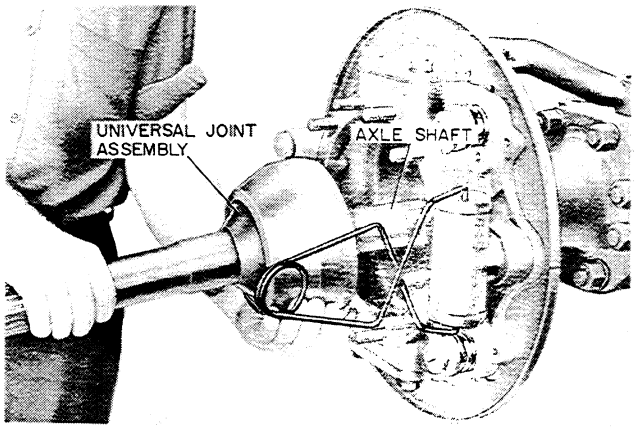

Figure U-28

IMPORTANT

Before disassembling the universal joint, check the shoulder of the outer race bell for a marking of (+) .012". Refer to Figure U-29. If the race bell is marked with a (+) .012" it means that the outer race bell, balls, inner race and cage are .012" oversize. Approximately 10% of the original equipment Rzeppa Universal Joints are made .012" oversize. It is therefore advisable to service only one universal joint at a time to avoid a chance of mixing parts from standard and oversize assemblies.

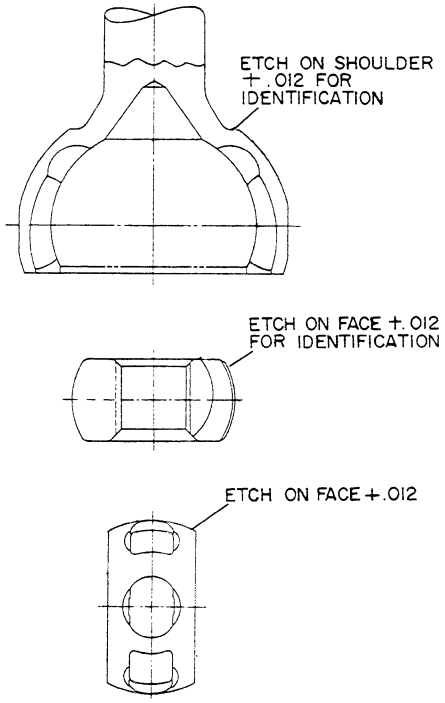

Figure U-29

Only standard size components will be furnished for service parts. Thus if either the race bell, inner race or cage have to be replaced - the complete assembly must be replaced (race bell, inner race, cage and balls.)

The only exception to using standard parts in an oversize assembly are the balls - standard balls can be used in an oversize assembly. The use of standard ball in an oversize assembly will not effect performance in any way, but it will result in slightly more backlash.

Never use the oversize balls in a standard assembly as it will result in hard steering and short life.

4. Clamp the inner axle shaft into a bronze jawed vise with the outer race bell in a downward position, Figure U-30.

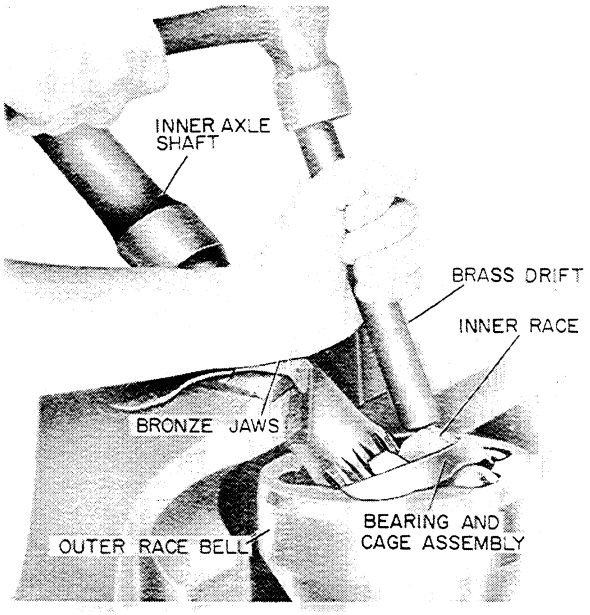

Figure U-30

5. Drive the outer race bell, bearing and cage assembly off the axle shaft, Figure U-30, using a brass drift against the end of the inner race, Figure U-30.

6. To seperate the inner cage, ball and outer race bell, tilt the inner race in the outer race bell until one ball can be lifted out, Figure U-31. Then tilt the inner race until the next ball can be removed. Continue this until all balls are removed.

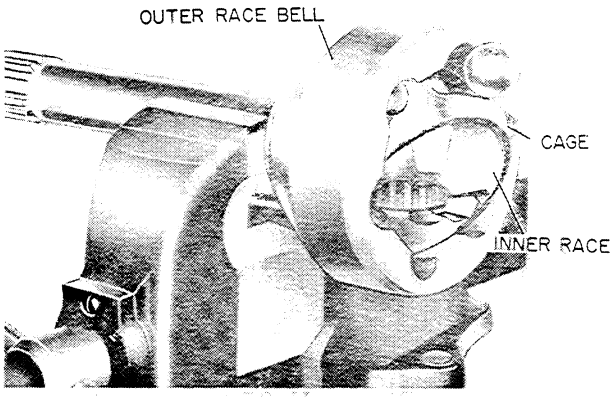

Figure U-31

7. Roll the cage and inner race at right angles to the outer race bell with the two elongated openings in the cage aligned with opposite teeth of the bell. Then lift the cage and inner race out of the outer race bell, Figure U-32.

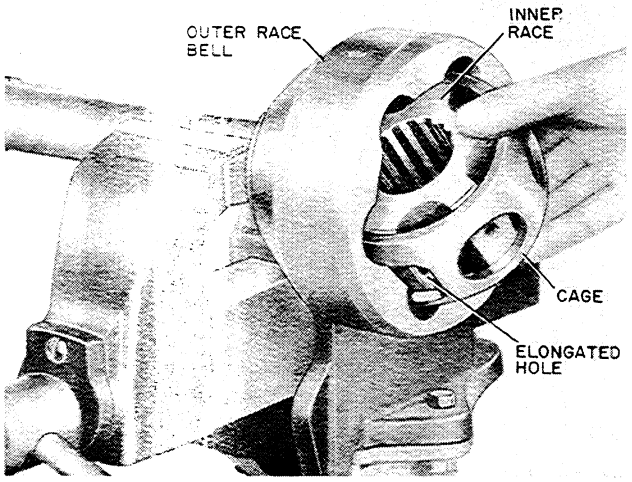

Figure U-32

8. To seperate the inner race from the cage, turn the race at right angles to the cage. Align one tooth on the race with the elongated hole in the cage and roll inner race out of the cage, Figure U-33.

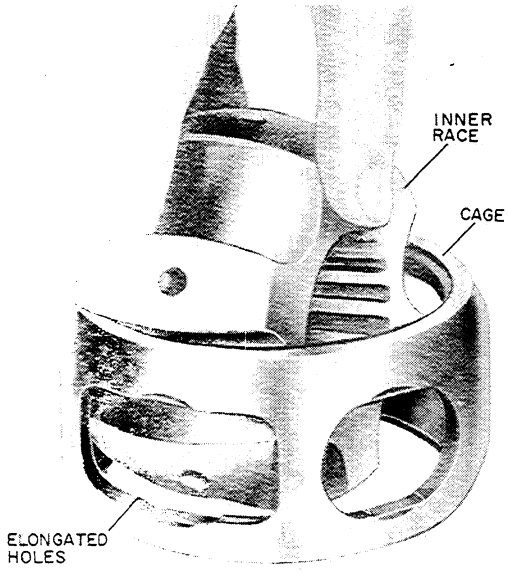

Figure U-33

Disassembly of The Universal Joint

If it is necessary to remove the universal joint flange assembly, refer to Sections O and Q for removal of the drag link and tie rod. With the steering linkage disconnected, remove and disassemble the universal joint flange assembly as follows:

1. Remove the trunnion to axle housing stud nuts, Figure U-34. Then remove the universal joint flange assembly, Figure U-34.

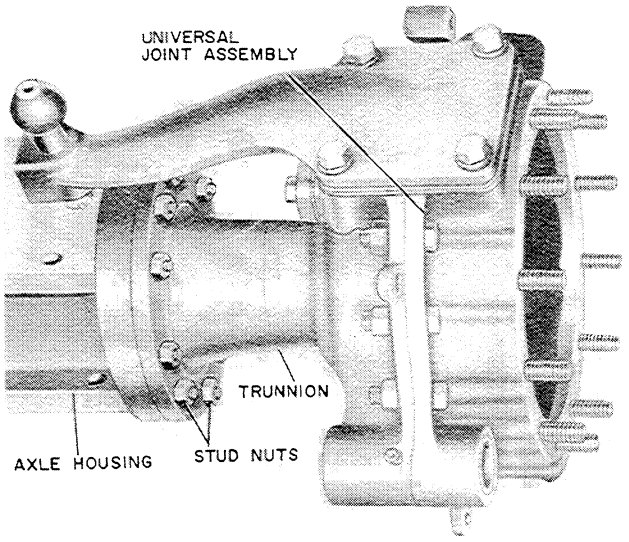

Figure U-34

2. Remove the steering arm capscrews, washers, steering arm and shim pack, Figure U-35.

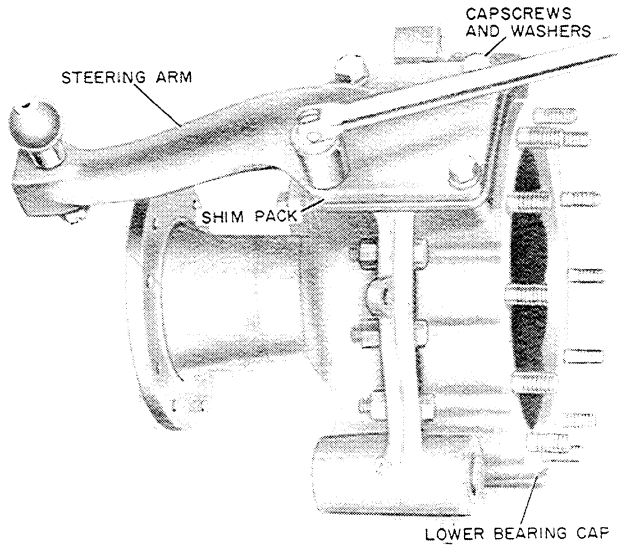

Figure U-35

3. Remove the lower bearing cap bolts, washers, bearing cap and shim pack, Figure U-35.

4. Lift off the bearing cups. Then remove the nuts and bolts that hold the flange halves together. Remove the flange halves from the trunnion socket, Figure U-36. The inner flange half must be tipped at an angle to clear the inner connecting flange.

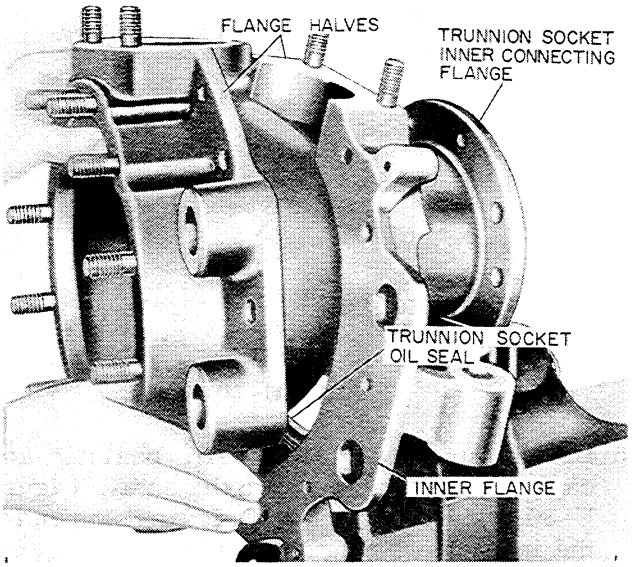

Figure U-36

5. If the trunnion socket bearings are damaged remove them, using the OTC No. 515 and 951 pullers, Figure U-37. The steering axle planetary and universal joint are now completely disassembled.

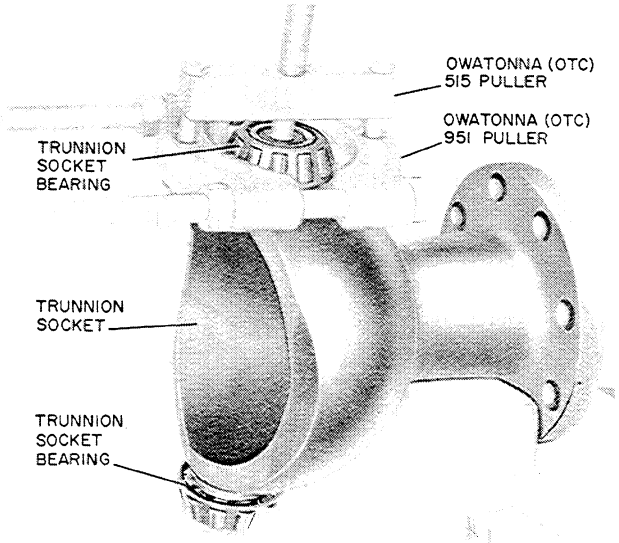

Figure U-37

RZEPPA UNIVERSAL JOINT INSPECTION (Steering Axle Only)

Before inspecting parts thoroughly clean them in a solvent such as kerosene or diesel fuel.

It is almost impossible to overstress the importance of careful and thorough inspection of the parts prior to reassembly. Thorough visual inspection for indications of wear, stress, pitting and scoring prior to reassembly of the parts will eliminate costly and unnecessary drive unit failure.

Outer Race Bell

Inspect the race bell both inside (race ways) and out for score marks and cracks. Check the shaft end of the bell for cracks at the base of the bell. Also check the bearing area of the shaft for score marks and the splined end for broken splines. Replace the outer race bell if score marks, cracks or broken splines are found.

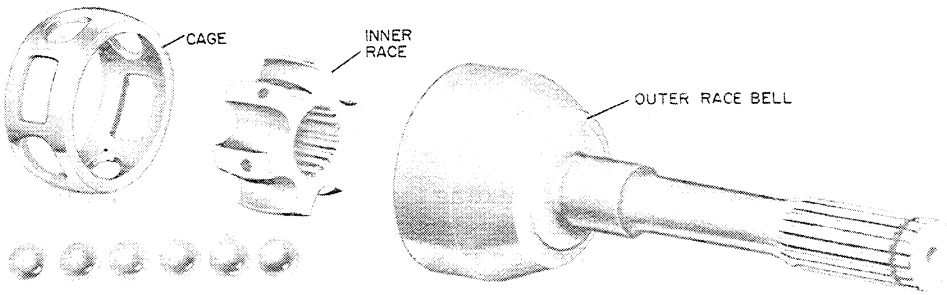

Figure U-38A

Inner Race Cage and Balls

Check the cage for cracks and score marks. Evidence of cracks or crushing of the cage is usually caused by improper turning angle adjustment - After reassembly, refer to Sections O and Q (depending upon model of loader) for correct turning angle adjustments.

Inspect the inner race and balls for score marks - Replace if scored.

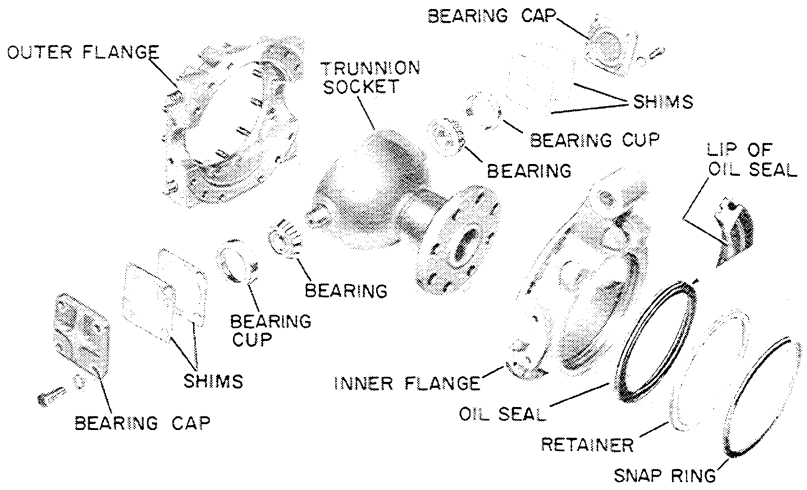

Figure U-38B

Trunnion Socket, Bearings, Flange and Oil Seal

Inspect trunnion socket for cracks. Check bearing area on socket for score marks or pitting. Check bearings for pitting or damage - Replace all bearings that show any evidence of damage.

Check castings for cracks - Replace any studs that have damaged threads.

Always replace trunnion socket oil seal and snap ring any time the flanges are disassembled.

PLANETARY - Inspection
(Both Rigid and Steering)

Before inspecting parts thoroughly clean them. Clean parts having ground and polished surfaces such as gears, bearings and shafts in solvent such as kerosene or diesel fuel.

DO NOT CLEAN PARTS IN GASOLINE, HOT SOLUTION TANK, SODIUM HYDROXIDE ORTHOSILICATES OR PHOSPHATES.

It is almost impossible to overstress the importance of careful and thorough inspection of the drive unit parts prior to reassembly. Thorough visual inspection for indications of wear, stress, pitting and the replacement of such parts as are necessary, will eliminate costly and avoidable drive unit failure.

Bearing, Cups and Cones

Inspect all bearings, cups and cones, including those not removed from the unit, and replace if the rollers, cups or cones are pitted or damaged in any way. Parts needing replacement should be removed with a suitable puller or in a press with sleeves. Avoid the use of drifts and hammers which may easily mutilate or distort component parts.

Gears

Inspect all the gears for wear or damage. Gears which are worn, ridged, pitted or scored must be replaced.

Shafts

Inspect all axle shafts for worn, pitted or broken splines. Also check for damaged bearing or oil seal surfaces on the axle shafts.

Check axle shafts on a known flat surface to make sure they are not "sprung".

NOTE: If an oil seal is damaged, make sure the brake linings are inspected and if they show evidence of being oil soaked, they must be replaced as described in Section W or WW.

General

1. Replace all worn or damaged parts. Hex nuts with rounded corners or damaged threads, all lock washers, all damaged studs, gaskets and oil seals must be replaced during reassembly. Use only Genuine Case parts.

2. Remove all nicks marks and burrs from machined surfaces. Threads must be clean and free to obtain accurate adjustments and correct torque.

3. The burrs caused by lock washers, at the spot face of stud holes on the planetary spiders and covers must be removed to assure easy reassembly of the parts and to assure proper torque.

4. Use a press when assembling component parts.

5. Tighten all fasteners to the correct Torque.

PLANETARY - INSPECTION
(Both Rigid and Steering)

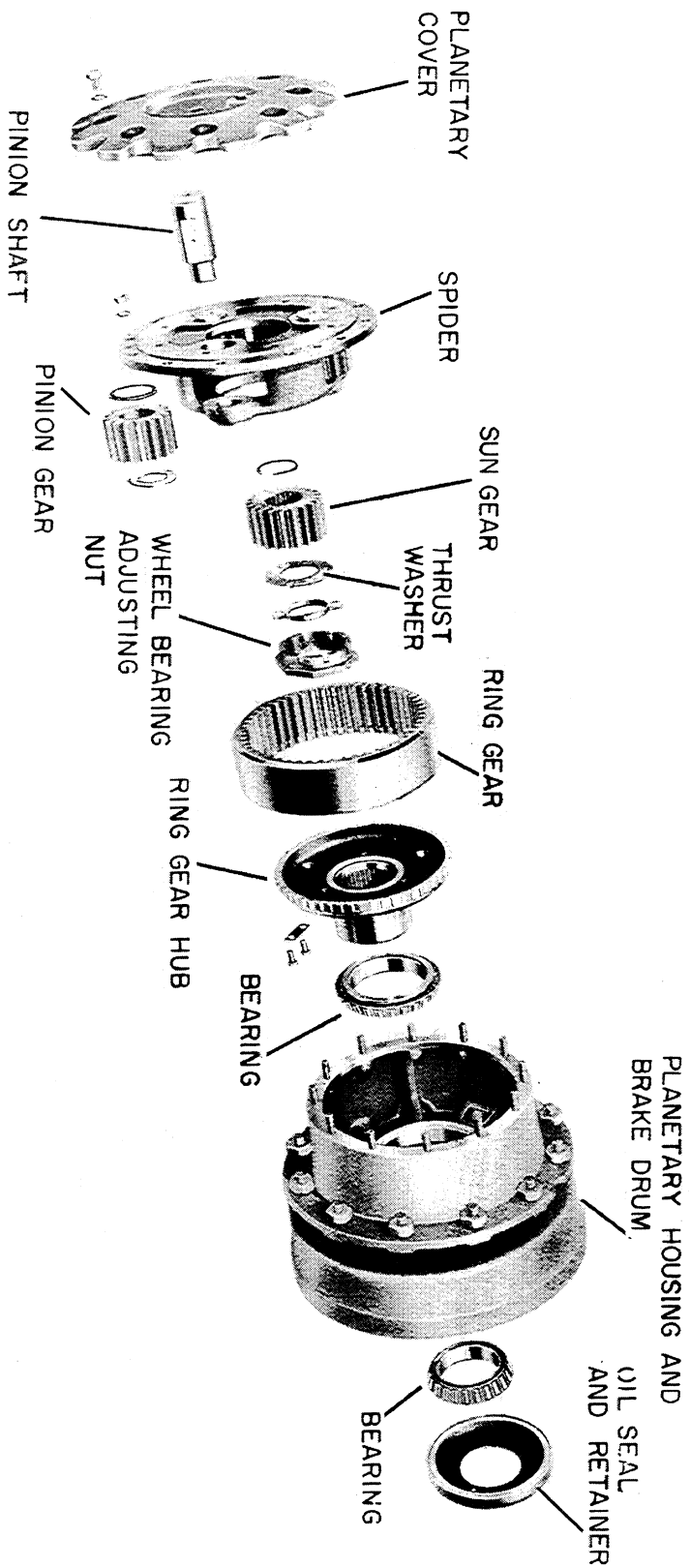

Figure U-39

REASSEMBLY OF THE PLANETARY SYSTEM

Before starting to reassemble the planetary system make sure all parts have been thoroughly cleaned and inspected, and a light coat of oil applied. Also make sure all damaged or worn parts are replaced and all oil seals and gaskets are replaced.

REASSEMBLY OF THE TRUNNION SOCKET AND FLANGES
(Steering Axle Only)

1. If the Trunnion Socket bearings have been removed, press on new bearings using a sleeve that bears only on the bearing inner race, Figure U-38. Press the bearing down until it is seated against the shoulder of the trunnion socket, Figure U-40.

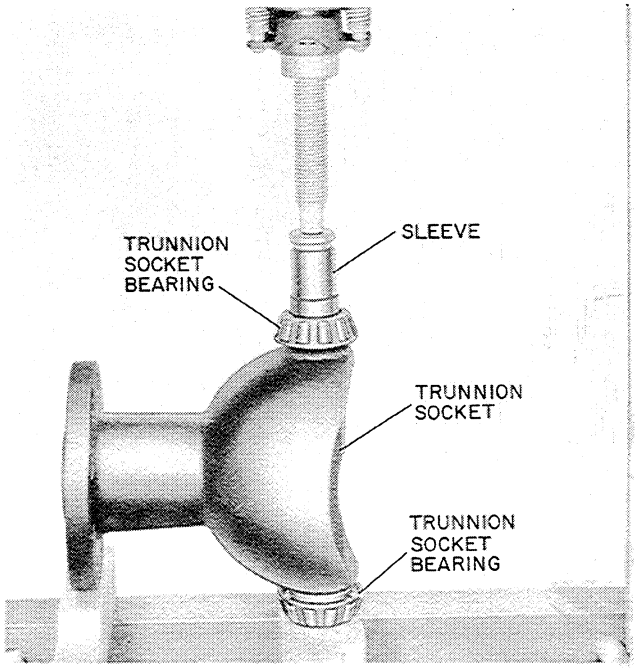

Figure U-40

2. Install the trunnion flange seal in the inner flange, Figure U-41. Note: lip of seal must face outer flange.

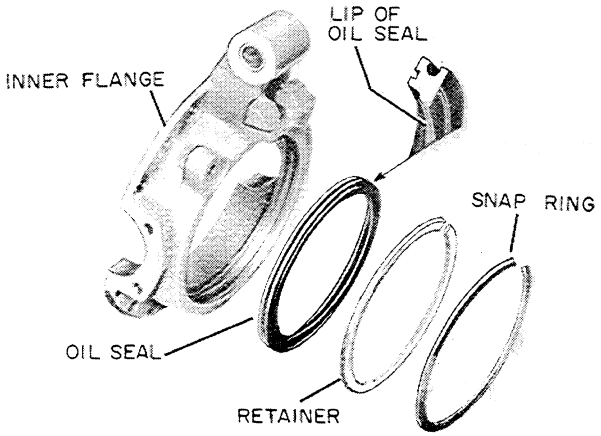

Figure U-41

3. Install seal retainer and snap ring, Figure U-41.

4. Install the inner trunnion flange half over the outer trunnion socket race and up against the bearings, Figure U-42.

5. Align the outer flange with the inner flange, Figure U-42. Then install the trunnion socket flange bolts, lock washers and nuts. Torque nuts evenly to -

RP and PS 100 Series Axles
1/2" x 2-1/2" Bolts - 94 to 102 Foot Pounds
7/16" x 1-1/4" Bolts - 54 to 58 Foot Pounds

PR and PS - 150 and 200 Series Axles
1/2" x 1-1/2" Bolts -85 to 91 Foot Pounds
1/2" x 1-7/8" Bolts - 94 to 102 Foot Pounds

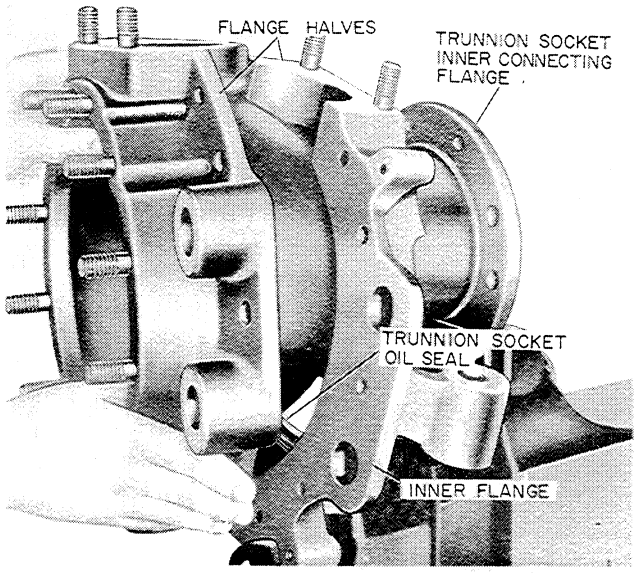

Figure U-42

NOTE: If a new inner trunnion flange is being installed, make sure the axle steering stop is adjusted as discribed on either Page Q-36, Section Q or Page O-25, Section O.

ADJUSTING TRUNION SOCKET BEARING PRE-LOAD AND CENTERING FLANGES (Steering Axle Only)

When assembling the flanges to the trunnion socket and adjusting trunnion socket bearing pre-load, it is very important that the trunion socket is centered between the flanges to insure proper axle shaft alignment. Centering the trunion in the flanges is accomplished by maintaining an equal thickness of shims under each trunion socket bearing cap. Failure to have the trunion socket centered may result in short life of axle and universal joint parts.

1. Install an equal thickness of shims between the bearing caps (both upper and lower) and trunion socket flanges shown in Figure U-43.

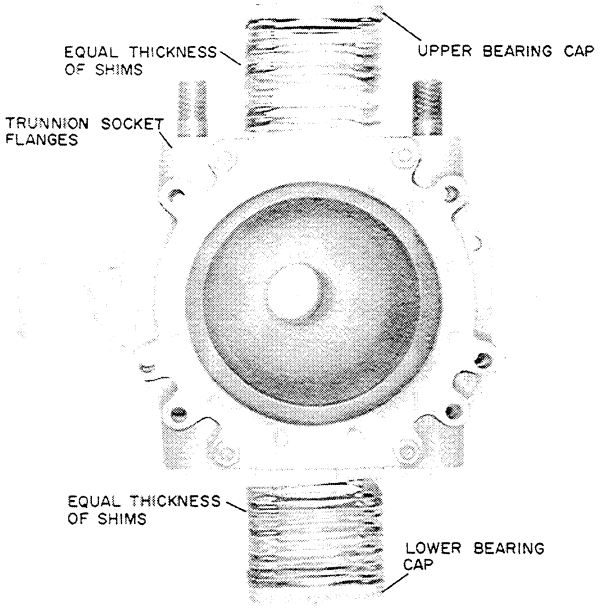

Figure U-43

Example: If you install .100 of an inch in shim thickness under the top bearing cap - you must also install .100 of an inch in shims under the lower bearing cap. Before checking the trunnion socket bearing pre-load - Torque the bearing caps to -

PR and PS - 100 Series Axle
1/2" x 1-1/2" Bearing Cap Bolts - 85 to 91 Foot Pounds.

PR and PS - 150 and 200 Series Axles
5/8" x 1-1/2" Bearing Cap Bolts - 168 to 180 Foot Pounds.

2. The first step in adjusting the trunion socket bearing pre-load is to make sure there is end play between the trunion socket and flanges - this end play at the start of the adjustment will prevent to much pre-load at the final adjustment.

To check the end play -

Set up a dial indicator on the outer trunion socket flange as illustrated in Figure U-44. Then check the end play between the companion flanges and the trunion socket - If there is no end play, continue to add the same thickness of shims between both the upper and lower bearing caps until at least .010" end play is obtained, Figure U-44.

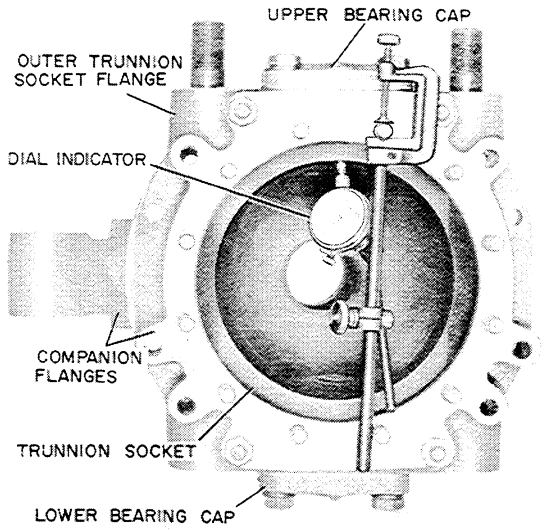

Figure U-44

3. After end play has been obtained, remove the same thickness of shims from both the upper and lower bearing caps to obtain no end play.

4. When no end play has been obtained, remove one .005" shim from under each bearing cap to properly pre-load the bearings.

5. Replace bearing caps and re-torque bolts. When pre-load is properly set, the following conditions must exist.
   a) The same thickness of shims will be under each bearing cap (this is to make sure the trunion socket is centered between the flanges.)
   b) There will be a slight drag when rotating the trunion, but it must not bind.

REASSEMBLY OF THE RZEPPA UNIVERSAL JOINT AND SPINDLE HUB

(Steering Axle Only)

IMPORTANT: When assembling the universal joint, thoroughly pack it with a good grade sodium base, short fiber wheel bearing grease.

1. Install the inner race into the cage at right angles by aligning the race teeth with the elongated cage holes, Figure U-45. Turn the race within the cage to position parallel with the cage.

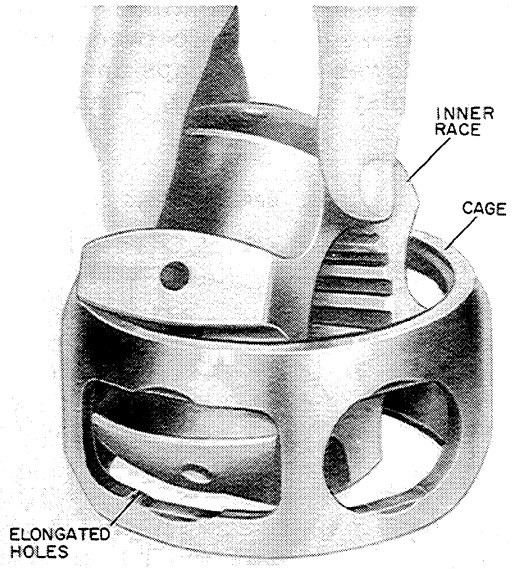

Figure U-45

2. Insert the inner race and cage into the outer race at right angles and tilt into position, Figure U-46. At the same time align the outer race teeth with the elongated openings in the cage.

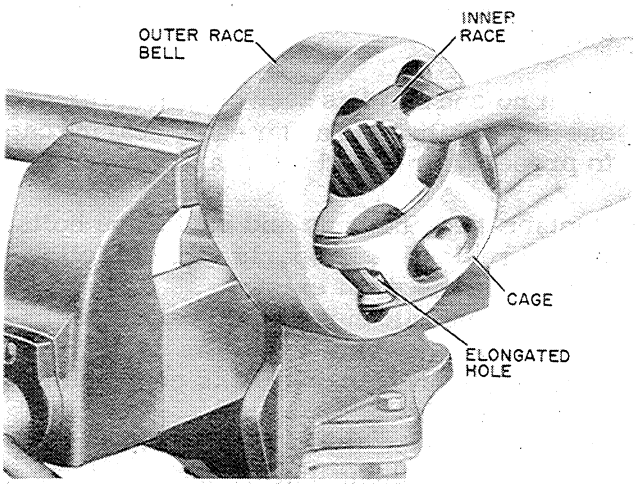

Figure U-46

3. Tilt the inner race and cage until one ball can be inserted, Figure U-47. Then tilt the race and cage until the next ball can be inserted. Continue until all the balls are in place.

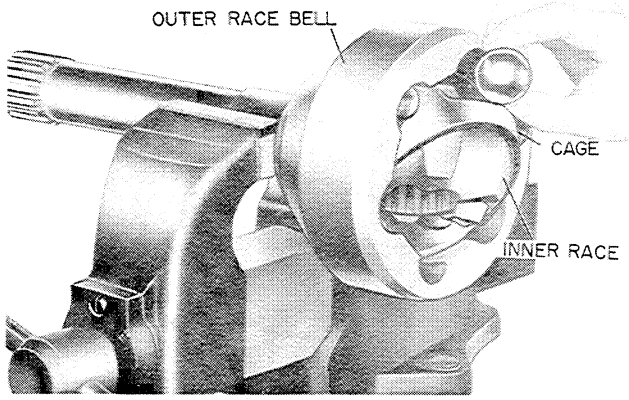

Figure U-47

4. Clamp the outer race shaft into a brass jawed vise with the inner race splines parallel with the outer race face, Figure U-48.

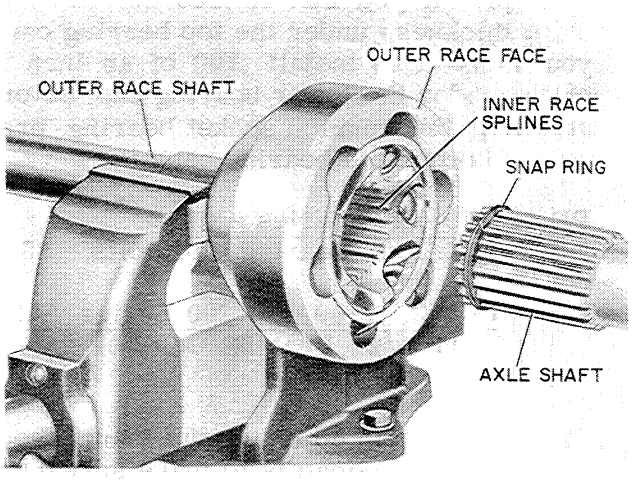

Figure U-48

5. Install a new snap ring onto the axle shaft, Figure U-48. Then install the axle shaft into the inner race of the universal joint of the inner race. Tap the axle shaft in until the snap ring expands inside the inner race.

6. Now install the universal joint in axle housing, Figure U-49.

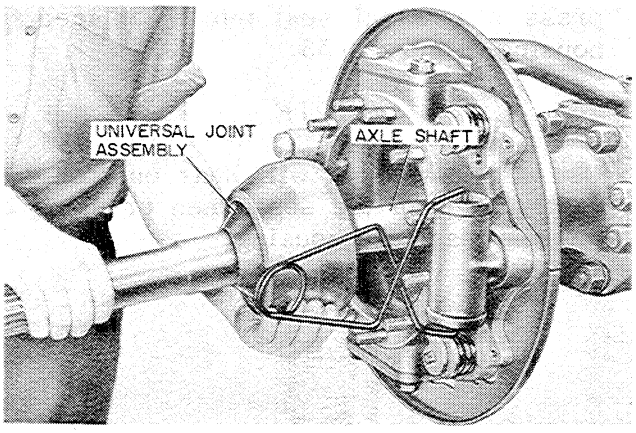

Figure U-49

7. Press a new oil seal into the outer end of the spindle hub, Figure U-50. The lip of the oil seal must face outward.

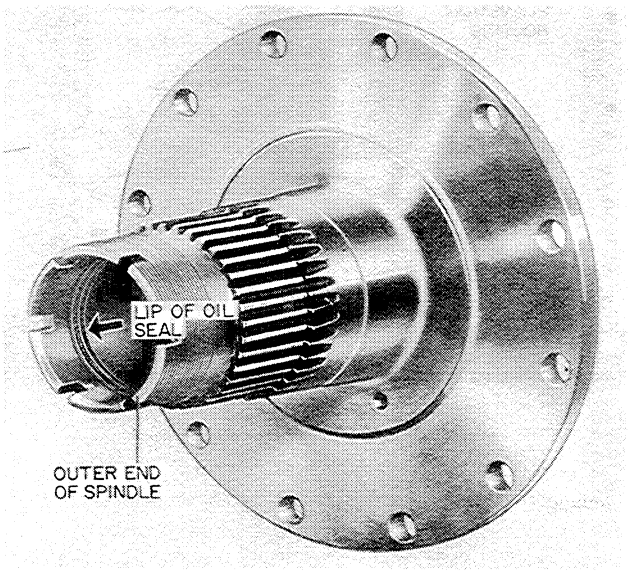

Figure U-50

8. Now install the spindle hub onto the universal joint outer flange, Figure U-51. Torque the stud nuts to the proper torque:

PS - 100 Series Steering Axles -

7/16" Nuts - 54 to 58 Foot Pounds

PS - 150 and 200 Series Steering Axles

9/16" Nuts - 120 to 129 Foot Pounds.

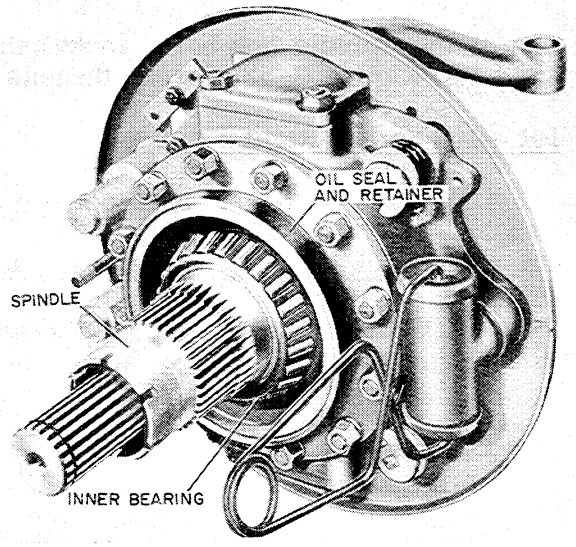

Figure U-51

9. Also install a new oil seal, retainer and bearing, Figure U-51.

REFER TO PAGES U-23 THRU U-26 FOR ASSEMBLY OF THE PLANETARY GEARS.

REASSEMBLY AND INSTALLATION OF THE SPINDLE HUB
(Rigid Axle Only)

1. Install the spindle hub bolts, lockwashers and nuts, Figure U-52. Torque the nuts to -

   PR - 100 Series Rigid Axles -

   7/16" Bolts - 54 to 59 Foot Pounds

   PR - 150 and 200 Series Steering Axles -

   9/16" Bolts - 120 to 129 Foot Pounds.

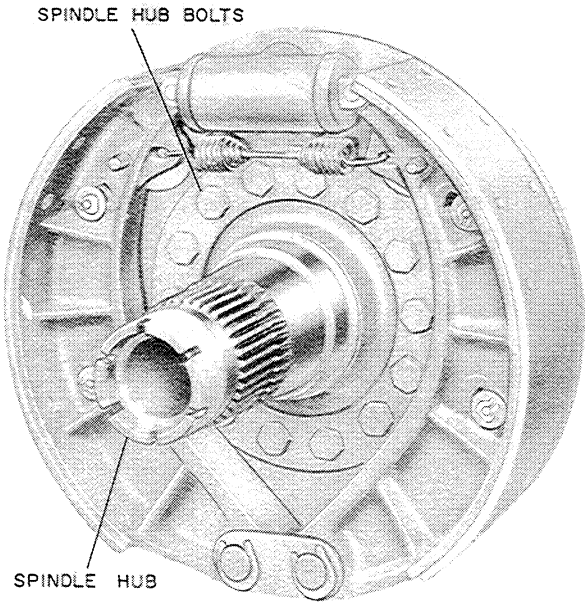

Figure U-52

2. Place the bearing in the bearing cone. Then press a new oil seal into the planetary housing, Figure U-53.

   NOTE

   Use a sleeve that will bear only on the cast flange of the seal when pressing it into the planetary housing.

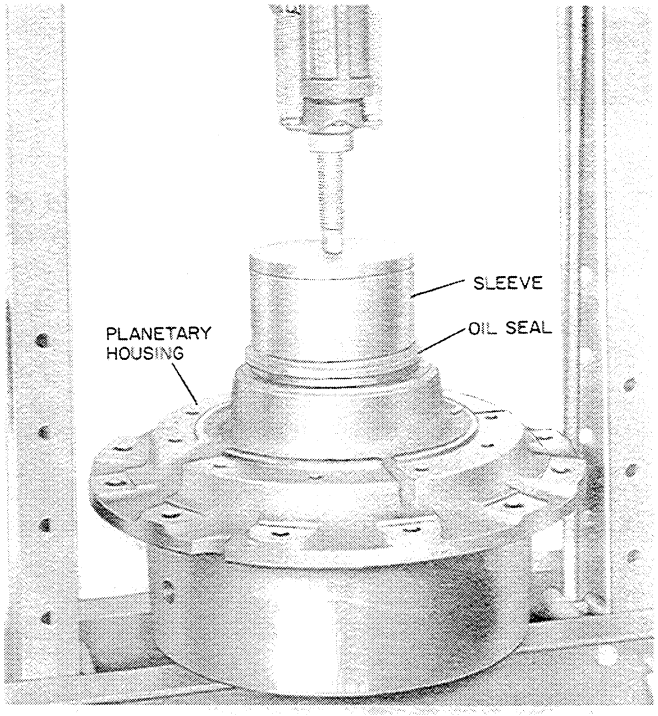

Figure U-53

REASSEMBLY AND INSTALLATION OF THE PLANETARY HOUSING
(Both Rigid and Steering Axles)

If the brake linings were removed refer to Sections W or WW for the correct brake lining installation procedure:

1. Install the brake drum and hub assembly onto the spindle hub and over brake shoes, Figure U-54.

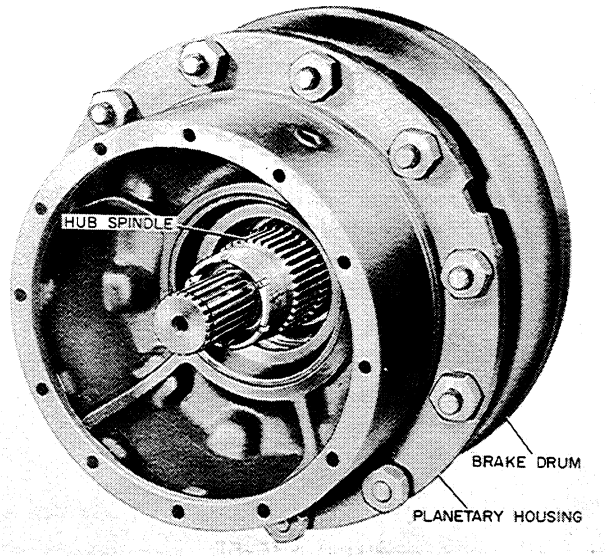

Figure U-54

2. Place the ring gear hub into the ring gear, Figure U-55. Then install the plates and capscrews, Figure U-55. Torque the capscrews to -

PR and PS - 100 Series Axles
3/8" Capscrews - 34 to 37 Foot Pounds

PR and PS - 150 to 200 Series Axles
7/16" Capscrews - 54 to 58 Foot Pounds.

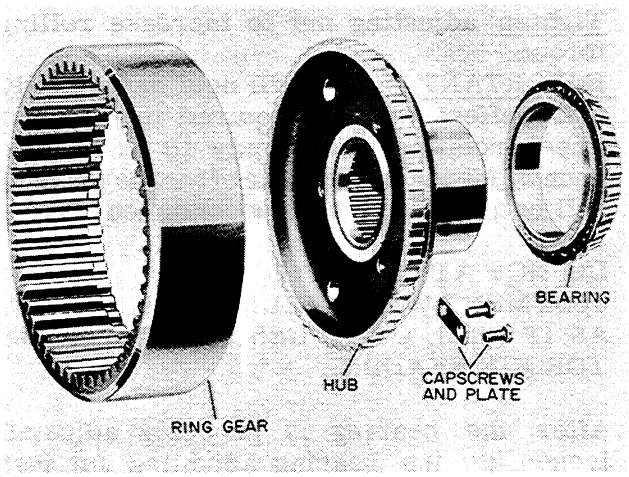

Figure U-55

After the ring gear capscrews are properly tightened, use a soft iron wire to safely lock the capscrews.

3. Now install the outer bearing onto the ring gear hub, Figure U-55.

4. Install the ring gear assembly onto the spindle hub and into the planetary housing, Figure U-56. Then install the wheel bearing adjusting nut, Figure U-56. Tighten until the nut is up against the ring gear hub.

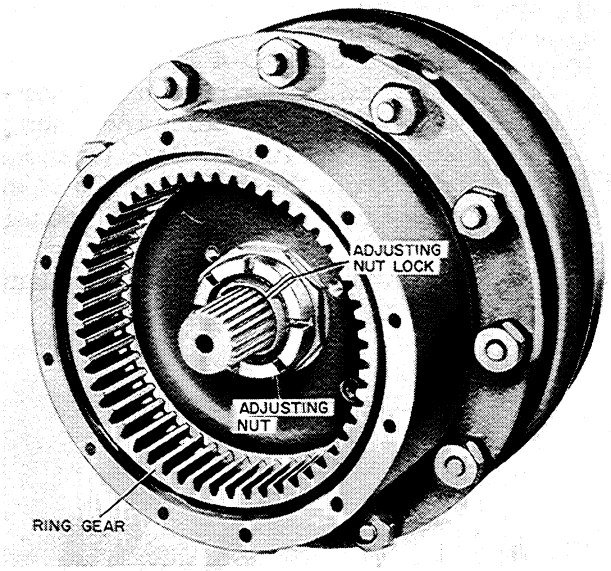

Figure U-56

When tightening the wheel bearing adjusting nut, rotate the planetary housing to insure even loading of the bearing. Refer to Page U-24 for proper adjustment of the wheel bearings.

WHEEL BEARING ADJUSTMENT
(Both Rigid and Steering Axles)

It will always be necessary to adjust the wheel bearings - anytime the wheel bearing adjusting nut has been removed.

The wheel bearing adjustment must be checked (and if necessary re-adjusted) - anytime the spider is removed from the planetary housing.

To check and adjust the wheel bearing, proceed as follows:

1. Raise the wheel being checked, off the floor far enough so the wheel rotates freely - Make sure brakes are not dragging.

   Block loader securely so it will not roll or tip.

2. Make sure the wheel bearing adjusting nut is tight against the planetary ring gear hub. IMPORTANT: If it is necessary to tighten the adjusting nut - the wheel must be rotated slowly while the nut is being tightened. (Remove adjusting nut lock before tightening.)
   NOTE: Use the 3856-D-4 Special Wrench to tighten the adjusting nut on 100 Series Axles and the 3856-E-5 Series Wrench on 150 and 200 Series Axles. Both Wrenches are available from the J. I. Case Co., Central Service Division, Racine, Wisconsin.

3. Install one spider capscrew into the planetary housing until it bottoms.

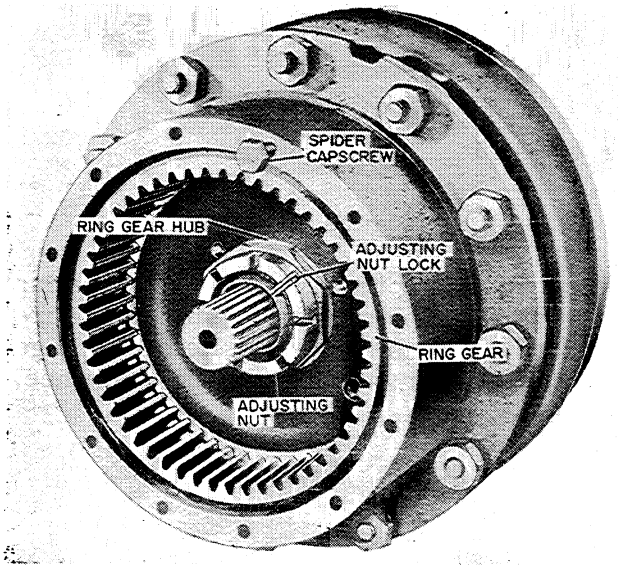

Figure U-57

4. Now check the bearing adjustment by measuring the rolling torque of the wheel - Place a torque wrench on the spider capscrew, Figure U-58, and note the amount of torque required to rotate the wheel.

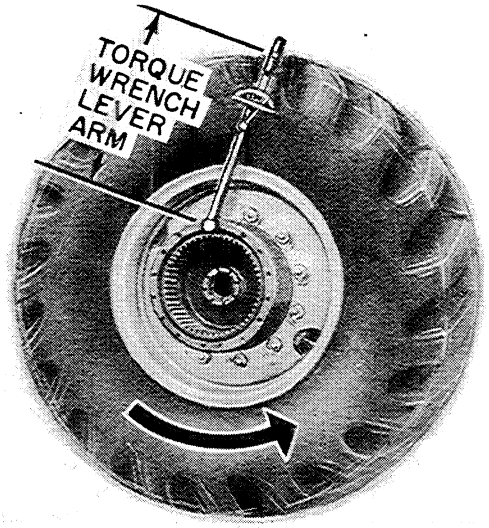

Figure U-58

If the lever arm length, Figure U-58, of the torque wrench is 18 inches - 10 foot pounds will be required to rotate the wheel and tire when the bearing is properly adjusted.

If the lever arm length of the torque wrench is 12 inches - 13 foot pounds will be required to rotate the wheel and the when the bearing is properly adjusted.

Loosen nut to decrease rolling torque.

Tighten adjusting nut to increase rolling torque.

IMPORTANT - You will note that slightly more effort will be required to start the wheel rotating - but only 10 or 13 foot pounds (depending on size of torque wrench) will be required for slow continuous rotation.

DO NOT ATTEMPT TO CHECK THIS ADJUSTMENT WITH BALLAST IN THE TIRES AS IT WILL ONLY RESULT IN A FALSE TORQUE READING.

5. After the bearing is properly adjusted loosen up the bearing adjusting nut just enough to align the slots in the nut for installation of the nut lock.

After the wheel bearing has been properly adjusted as described on Page U-24, proceed as follows for the re-assembly of the planetary gears (both rigid and steering axles)

1. On rigid axles, insert the axle shaft into the axle housing until the axle shaft is engaged with the differential side gear.

2. Then install the sun gear thrust washer, sun gear and snap ring onto the axle shaft, Figure U-59.

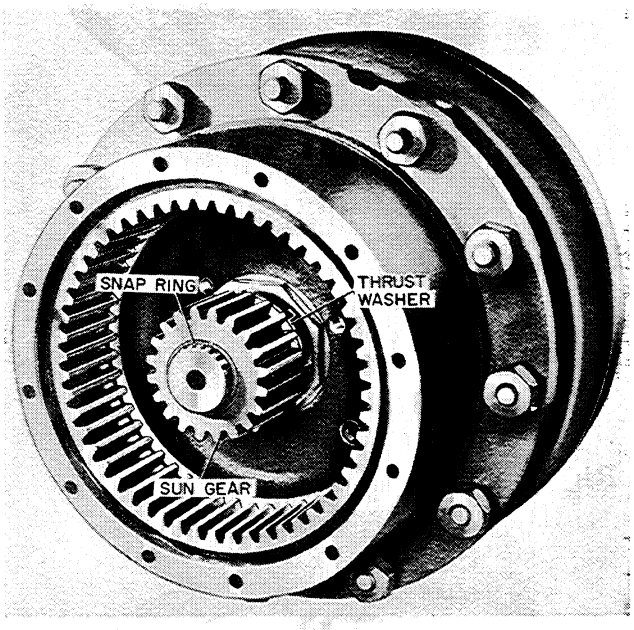

Figure U-59

3. If the pinions were removed from the planetary spider place the pinion and thrust washer into the spider. Then press the pinion shaft down through the spider thrust washers and pinion, Figure U-60, until the shoulder on the pinion shaft is seated against the spider cage.

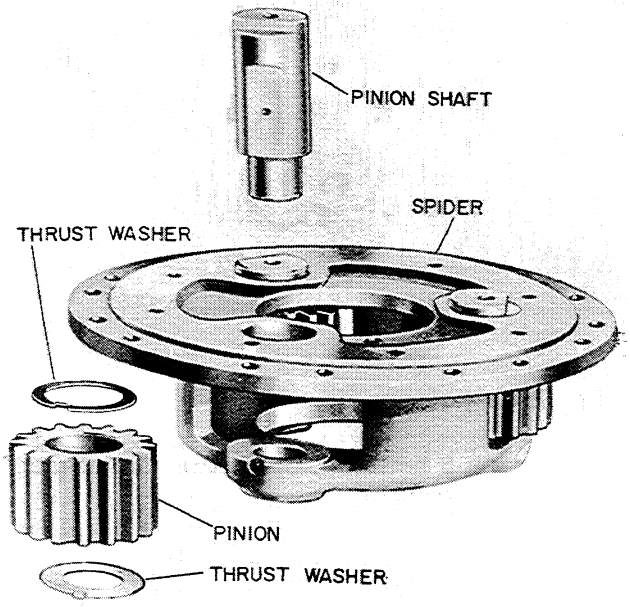

Figure U-60

4. Place a new gasket onto the spider cage, then install the spider and pinion assembly into the ring gear and around the sun gear, Figure U-61. Install the spider to planetary housing cap screws and torque evenly to -

PR and PS - 100 Series Axles -
1/2" Capscrews - 85 to 91 Foot Pounds

PR and PS - 150 and 200 Series Axles -
1/2" Capscrews 85 to 91 Foot Pounds

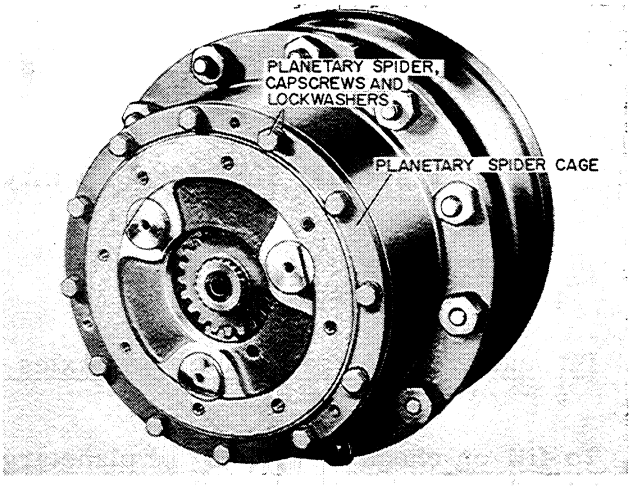

Figure U-61

5. Place a new gasket on the planetary cover, then install the planetary cover on the spider, Figure U-62. Install the cover cap screws and torque to -

PR and PS - 100 Series Axles -
7/16" Capscrews - 54 to 58 Foot Pounds

PR and PS - 200 Series Axles -
7/16" Cpascrews - 54 to 58 Foot Pounds

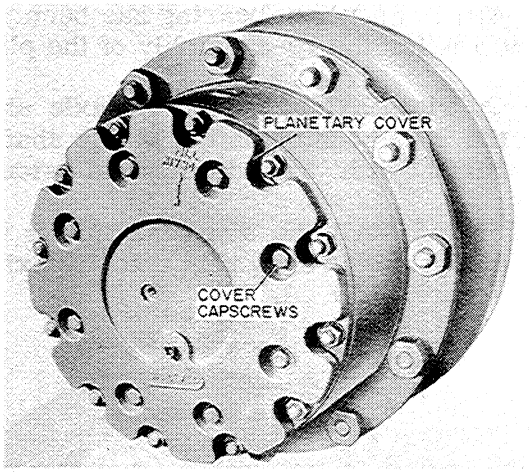

Figure U-62

LUBRICATION

The oil level in the planetary should be checked every 8 hours of operation and changed any time the planetary is disassembled.

Planetary Housing Capacity (Both Rigid and Steering Axles)

PR and PS - 100 Series Axles -
4-1/2 Pints - SAE 90 EP

PR and PS - 150 and 200 Series Axles -
6 Pints - SAE 90 EP

To fill or check the oil in the planetary, rotate the wheel until the filler plug is on top and the level plug is at the bottom, Figure U-63.

1. To check the oil level, remove the level plug, Figure U-63. The oil must be even with the level plug. Re-install level plug.

2. To fill the planetary, remove the filler plug and level plug. Fill with SAE 90 EP oil until oil appears at the level plug. Then re-install the filler plug and level plug.

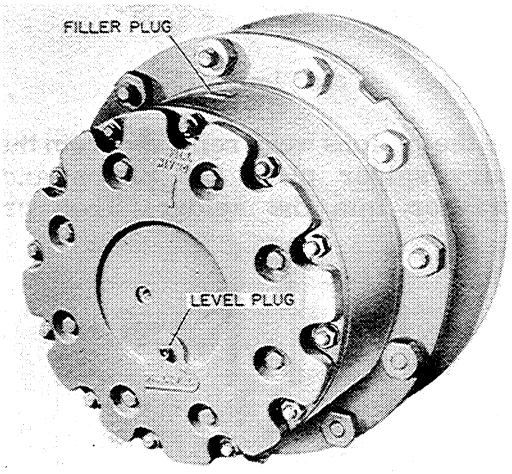

Figure U-63

Trunnion Socket Bearing Lubrication

The trunnion socket bearings must be lubricated after each 8 hours of operation and immediately after reassembly.

Approximately 2 or 3 strokes of No. 1 gun grease will be required after reassembly.

1 stroke of No. 1 gun grease is usually sufficient for daily lubrication.

SERVICE SUGGESTIONS
Oil Transfer

1. From Differential to Rzeppa Universal Joint or Planetary Housing

CAUSE	REMEDY
Axle shaft oil seal.	Replace axle shaft oil seal Figure U-64.

2. From Planetary Housing to Differential (Rigid Axle Only)

CAUSE	REMEDY
Axle shaft oil seal damaged.	Replace axle shaft oil seal, Figure U-64. Refer to Page U-21.

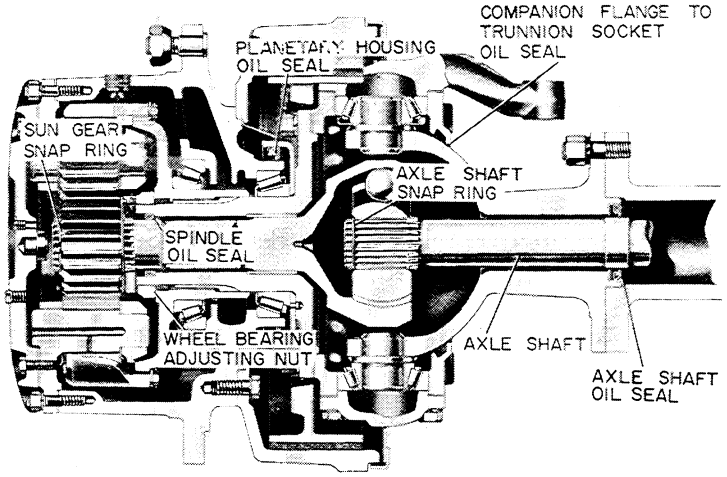

Figure U-64

3. From Planetary Housing to Rzeppa Universal Joint (Steering Axle Only).

CAUSE	REMEDY
Spindle Oil Seal damaged.	Replace oil seal Figure U-64 and as described on Page U-18.

4. From Planetary Housing to Brake Housing (Both Rigid and Steering Axles)

CAUSE	REMEDY
Planetary Housing Oil Seal damaged.	Replace oil seal, Figure U-64 and as described on Page U-21. Clean up or replace brake shoes as described in Section W or WW.

Noise (Both Rigid and Steering Axles)

CAUSE	REMEDY
1. Wheel Bearing Not adjusted properly.	1. Adjust wheel bearing as described on Page U-24. If bearing is damaged it will also have to be replaced.

2. Broken snap ring on axle shaft (Both Rigid and Steering Axles).	2. Replace snap ring as described on Page U-20.
3. Broken snap ring on steering axle outer race bell shaft.	3. Replace snap ring as described on Page U-25.
4. Damaged Rzeppa Universal Joint.	4. Service Universal Joint as described on Page U-20. Note: Make sure the trunnion socket oil seal is replaced when servicing the universal joint, as a damaged seal at this point can allow dirt to enter and damage universal joint.
5. Damaged wheel bearings.	5. Replace and properly adjust wheel bearings Pages U-23 and U-24.
6. Broken or chipped gear teeth in planetary.	6. Replace broken or chipped gears. Planetaries - Pages U-16 thru U-17.

Hard Steering (Steering Axle Only)

CAUSE	REMEDY
1. Steering linkage not adjusted properly or hydraulic components of steering damaged.	1. Refer to Section O or Q.
2. Damaged trunnion bearing, due to improper adjustment, or lack of lubrication.	2. Replace and adjust bearings as described on Pages U-18 thru U-19.
3. Damaged universal joint due to improperly adjusted steering stops.	3. Service Universal Joint as described on Pages U-18 thru U-19. Adjust steering stops as described in Sections O or Q.

Unequal Turning Angle of Loader

CAUSE	REMEDY
1. Steering Stops not properly adjusted.	1. Adjust steering stops as described in Section O or Q.
2. Steering cylinder piston rod stroke not adjusted properly.	2. Adjust stroke of steering cylinder piston rod as described in Section O or Q.
3. Cam and lever in steering gear box not centered properly.	3. Center lever shaft on cam as described in Section O or Q.

NOTE: CASE CORPORATION **reserves the right to make improvements in design or changes in specifications at any time without incurring any obligation to install them on units previously sold.**

SECTION

U

Supplement No. 1

SERVICING THE

PLANETARIES AND AXLES
(PS50 and PR60 Series)

●

STEERING AXLE UNIVERSAL JOINT
(Cardon Joint)

ON

CASE 4 WHEEL DRIVE

UNIT LOADERS

PRINTED IN U.S.A.

TABLE OF CONTENTS

INTRODUCTION (General) . . . . . U-3 thru U-7

Why Planetary Drives . . . . . U-3 thru U-4
The Planetaries (General) U-5
The Planetaries (How It Works) U-6

IDENTIFICATION OF AXLES AND PLANETARIES U-30

REMOVAL AND DISASSEMBLY OF THE PLANETARY SYSTEM . . . . U-8 thru U-14

Removal and Disassembly of Planetary Housing (Both Rigid and Steering) . . . . . U-8 thru U-10
Removal and Disassembly of the Spindle Hub (Rigid Axle Only) U-11
Removal and Disassembly of the Spindle Hub and Cardon Steering Universal Joint (Steering Axle Only) . . . . . U-12 and U-32 thru U-33

INSPECTION

Cardon Steering Universal Joint Inspection (Steering Axle Only) U-32
Planetary Inspection (Both Rigid and Steering) . . . . . U-16 thru U-17

REASSEMBLY OF THE PLANETARY SYSTEM

Adjusting Trunnion or Steering Joint Housing Bearing Pre-Load (Steering Axle Only)
Adjusting Procedure U-18
Adjusting Specifications U-31
Reassembly of the Cardon Steering Universal Joint . . . . . U-34 thru U-35
Reassembly and Installation of the Spindle Hub (Rigid Axle Only) U-22
Reassembly of the Planetary Housing (Both Rigid and Steering Axle) . . . . . U-23 thru U-26

WHEEL BEARING ADJUSTMENT (BOTH RIGID AND STEERING AXLES)

Adjusting Procedure U-24
Adjusting Specifications U-31

LUBRICATION U-26

SERVICE SUGGESTIONS U-27

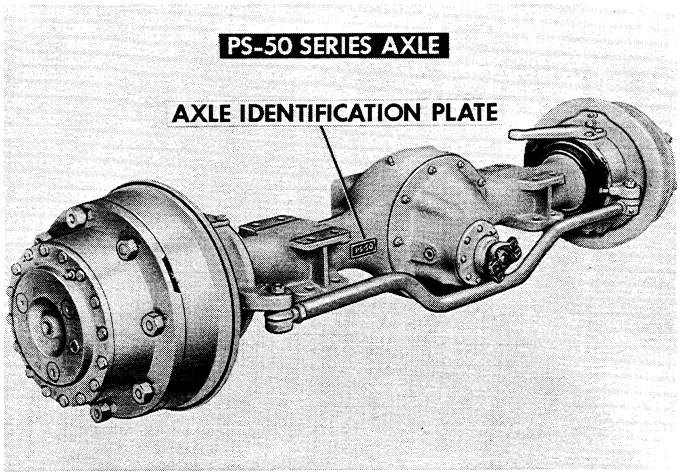

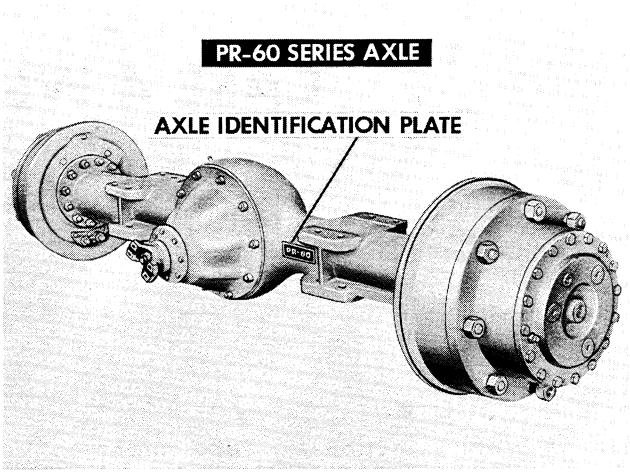

SERVICING THE PS-50 AND PR-60 AXLE PLANETARIES

The procedure for servicing the PS-50 and PR-60 Series Axle Planetaries is the same as described in Section U except for the following torque and pre-load specifications:

RIGID AXLE

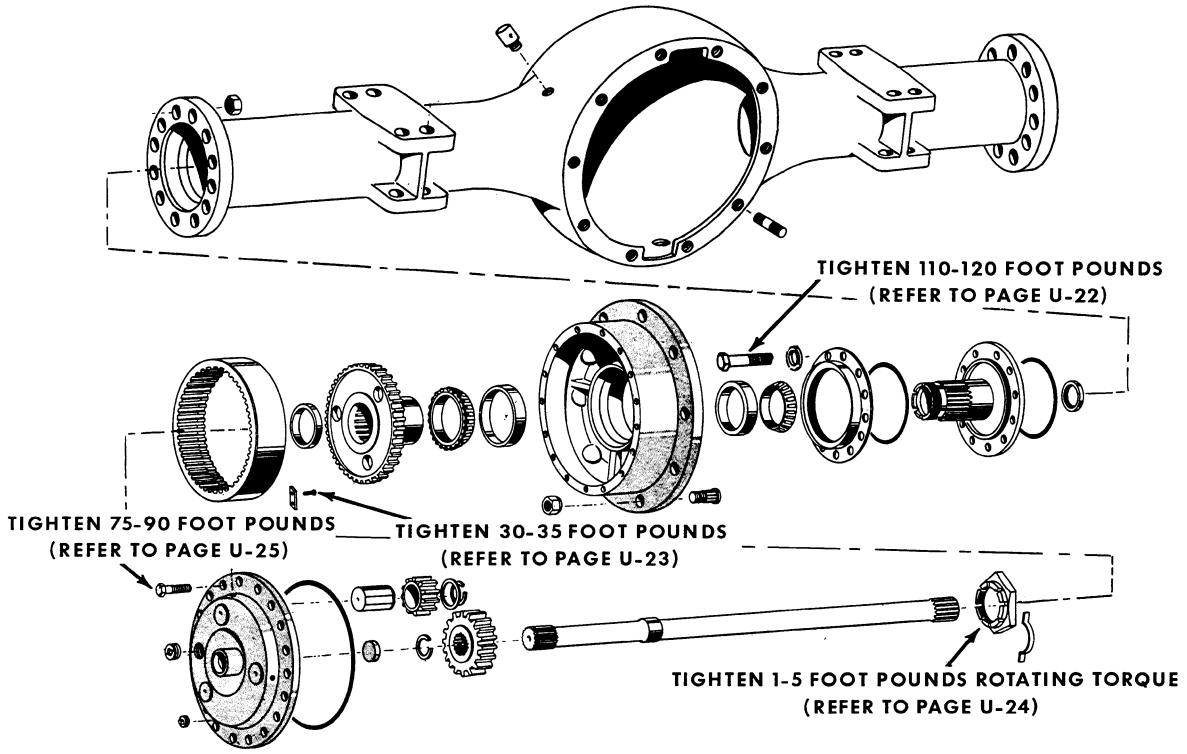

STEERING AXLE

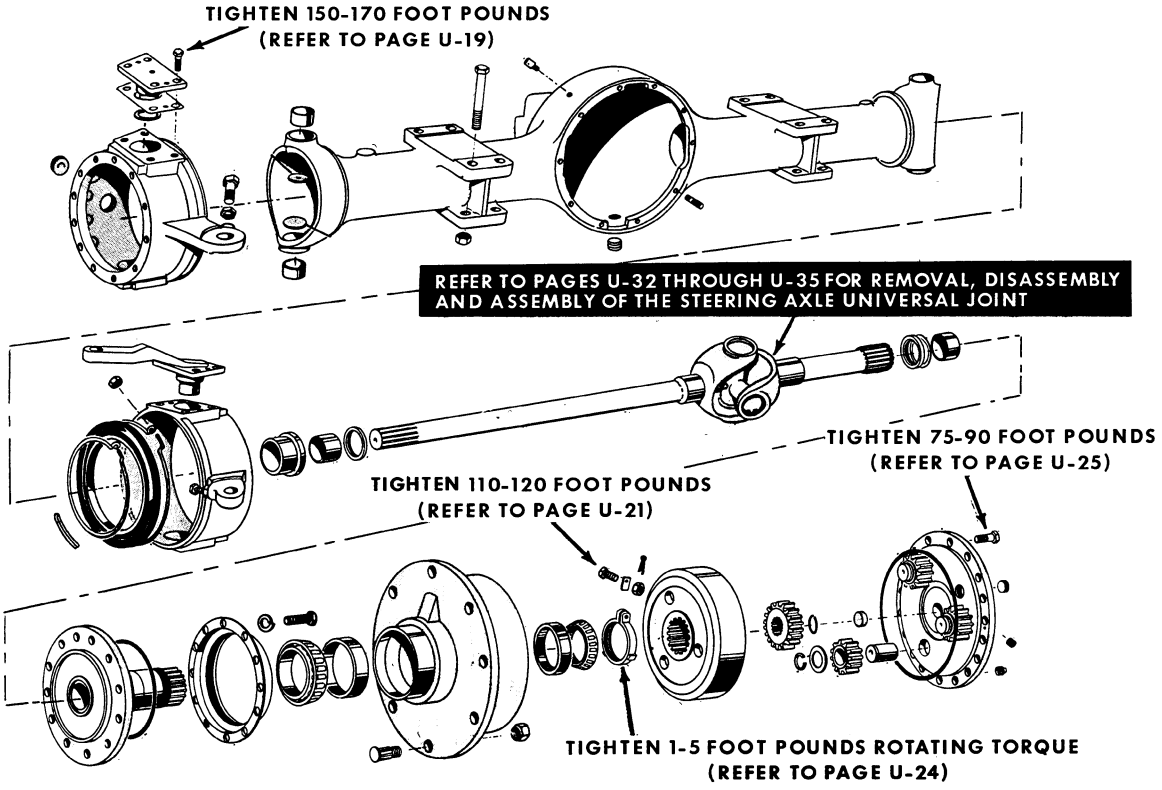

REMOVAL AND DISASSEMBLY
(Refer to Figures U-65 and U-66)

Removal

A. Remove the planetaries from the axle as described in Section U. Refer to Pages U-8 through U-11.

B. Pull out the complete steering axle universal joint assembly being careful not to damage the axle shaft inner oil seal.

Disassembly

A. Remove the four snap rings one on each ear of the yokes with a snap ring pliers.

B. Lay the universal joint assembly on an open vise with one yoke horizontal and resting on the vise jaws.

C. Tap the upper ear of the vertical yoke several times with a rawhide hammer. The vertical yoke will be driven down and will push out the needle bearing and cap.

CAUTION

The bearing has a highly polished surface and care should be exercised not to mar or scratch surface during removal.

Disassembly (Continued)

D. If the metal retainers have worked free from the bearing caps, remove the retainers from the arms of the cross through the hole in the yoke.

E. Turn the yoke upside down and remove the needle bearing and retainer on the opposite side of the yoke as outlined in Steps C and D.

F. Remove vertical yoke by gently working yoke off arms of the cross.

G. Hold the remaining yoke in a vertical position and rest the cross arms on top of the open vise. Then follow Steps C, D and E.

H. Remove the cross from the yoke.

INSPECTION
(Refer to Figure U-66)

With the steering universal joint completely disassembled, the component parts can be cleaned and inspected for wear, score marks and burrs. All parts that are worn or damaged must be replaced.

Replace all parts that show excessive wear or damage. If it is necessary to install a new cross, all four needle bearings must also be replaced. If one needle bearing is replaced, replace all four bearings and cross.

IMPORTANT

Do not mix new and used bearings together. Replacement should be made in sets of four.

STEERING AXLE

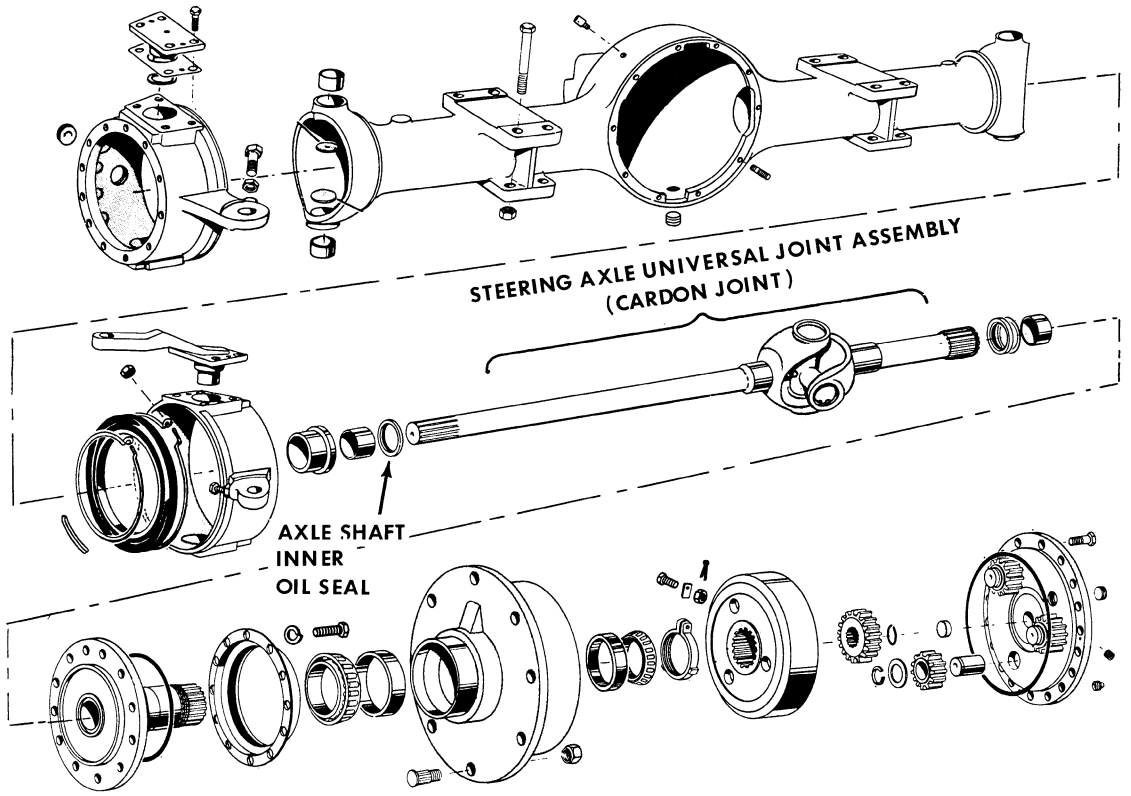

Figure U-65

STEERING AXLE UNIVERSAL JOINT
(Cardon Joint)

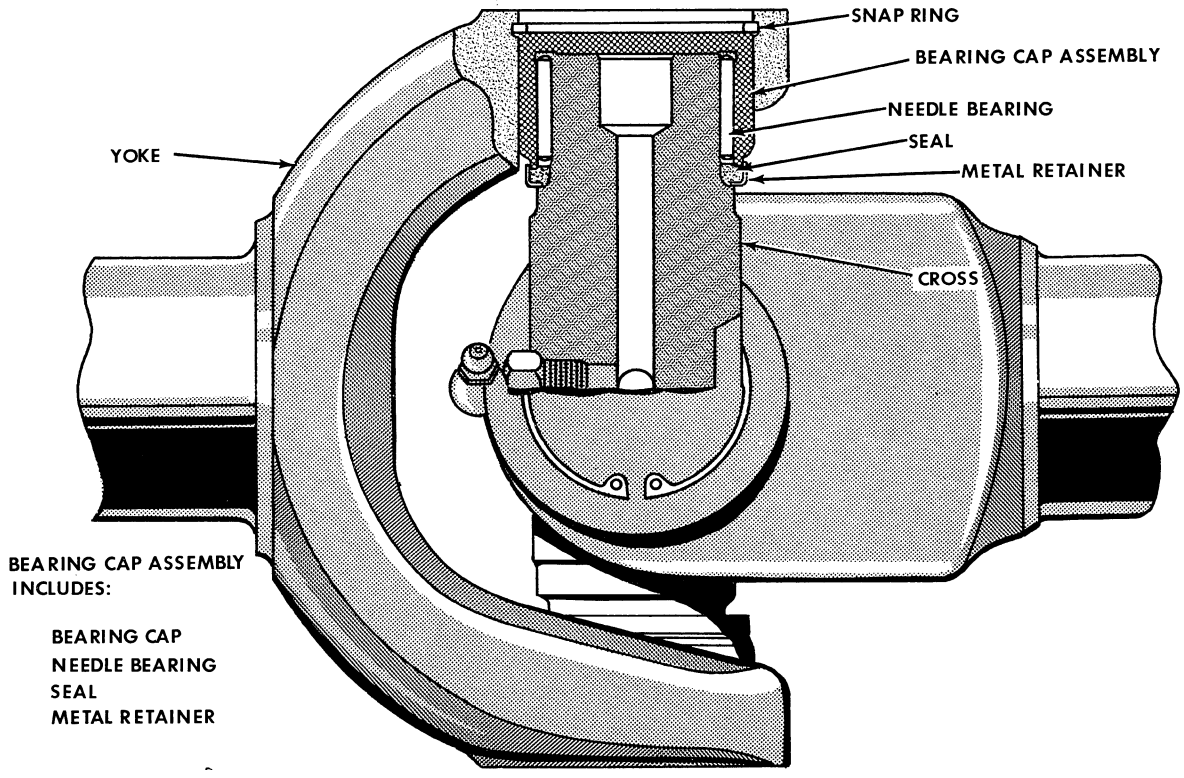

Figure U-66

ASSEMBLY
(Refer to Figure U-67)

A. Place needle bearing cap into ear of yoke.

B. Place yoke in hydraulic press and press the needle bearing cap into position.

CAUTION

Bearing cap has a highly polished surface and care should be taken not to mar or scratch surface during installation operation.

C. Remove yoke from press and work one arm of the cross into the yoke and bearing cap.

D. Install opposite needle bearing cap by hand and line up the cross arm.

E. Press the needle bearing cap into the yoke and on to the cross arm.

CAUTION

Cross must move freely in both caps. If cross binds, remove cap and check for upset needles.

F. With a short plug, press bearing caps past the snap ring groove and insert snap ring, one with each bearing cap.

G. Repeat Steps B through F for installing remaining caps and yoke.

H. Install the steering axle universal joint assembly into the housing being careful not to damage the axle shaft inner oil seal.

I. For adjustment of the steering joint housing, refer to Page U-19, Section U and Page U-31 of this section.

J. Install planetaries as described in Section U. Refer to Pages U-22 through U-26.

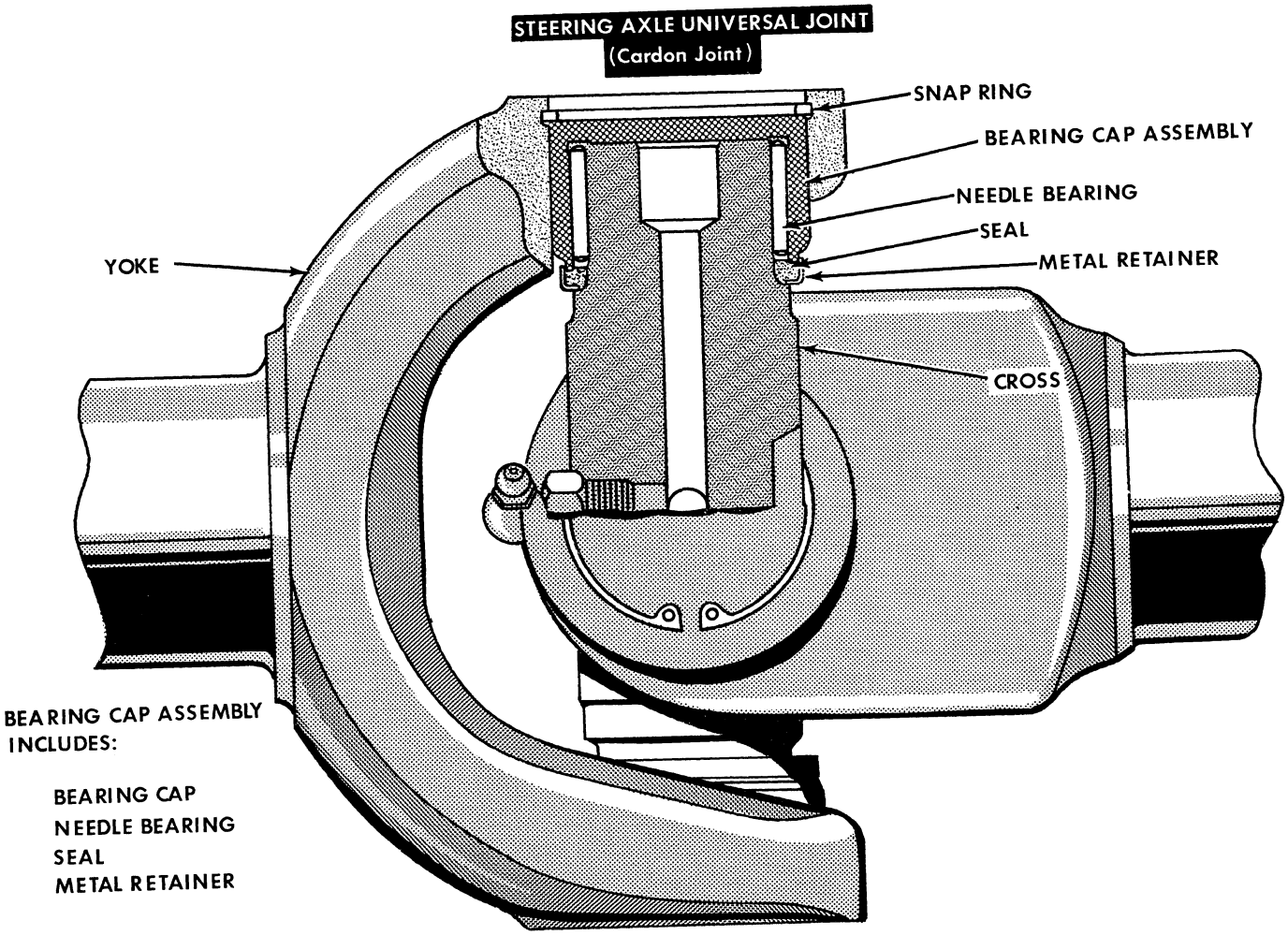
STEERING AXLE UNIVERSAL JOINT
(Cardon Joint)
SNAP RING
BEARING CAP ASSEMBLY
NEEDLE BEARING
SEAL
METAL RETAINER
YOKE
CROSS
BEARING CAP ASSEMBLY INCLUDES:
BEARING CAP
NEEDLE BEARING
SEAL
METAL RETAINER

Figure U-67

NOTE: CASE CORPORATION **reserves the right to make improvements in design or changes in specifications at any time without incurring any obligation to install them on units previously sold.**

SECTION

W

SERVICING THE

SERIES "01"
HYDRAULIC BRAKE CYLINDER

●

BRAKE SHOES AND DRUMS

ON

CASE 4 WHEEL DRIVE
UNIT LOADERS

PRINTED IN U.S.A.

TABLE OF CONTENTS

QUICK REFERENCE GUIDE FOR CHECKING BRAKE SHOE ADJUSTMENT AND BRAKE SYSTEM PRESSURE CHECK ---------- W-3

INTRODUCTION ---------- W-4 thru W-5

SERIES "01" HYDRAULIC BRAKE MASTER CYLINDER ---------- W-5 thru W-17

How It Works ---------- W-6 thru W-7

Hydraulic Brake System Pressure Check ---------- W-8 thru W-9

Removal Of The Master Cylinder From Loader ---------- W-11

Disassembly Of The Hydraulic Master Brake Cylinder ---------- W-12 thru W-13

Inspection Of The Brake Master Cylinder ---------- W-14 thru W-15

Assembly Of The Brake Master Cylinder ---------- W-16 thru W-17

SERVICING THE "H" AND "DH" SERIES BRAKE LININGS, BRAKE DRUM AND WHEEL CYLINDERS ---------- W-19 thru W-33

Brake Shoe Adjustment Ridid Front Axle "DH" Series Brakes ---------- W-20

Brake Shoe Adjustment (Minor) Steering Rear Axle "H" Series Brake ------ W-21

Brake Shoe Adjustment (Major) Steering Rear Axle "H" Series Brake ---------- W-32 thru W-33

RIGID AXLE "DH" SERIES BRAKE ---------- W-22 thru W-26

Brake Shoe Disassembly ---------- W-22

Inspection Of The "DH" Series Brake Assembly ---------- W-23 thru W-24

Assembly Of The "DH" Series Brake ---------- W-26

STEERING AXLE "H" SERIES BRAKE ---------- W-27 thru W-31

Brake Shoe Disassembly ---------- W-27

Inspection Of The "H" Series Brake Assembly ---------- W-28 thru W-29

Assembly Of The "H" Series Brake ---------- W-31

Removal And Disassembly Of The Wheel Cylinders ---------- W-34

Assembly And Installation Of The Wheel Cylinders ---------- W-35

SERVICE SUGGESTIONS ---------- W-36 thru W-38

TRANSMISSION PARKING BRAKE ---------- Refer To Section S.

QUICK REFERENCE GUIDE FOR CHECKING BRAKE SHOE ADJUSTMENT AND BRAKE SYSTEM PRESSURE CHECK

Brake Shoe Adjustment (Minor)

Occasionally it will be necessary to adjust the brake shoes to compensate for lining wear. All minor adjustments on the Steering Axle are made with the excentric cams, Figure A. All minor adjustments on the Rigid Axle are made with the adjusting bolts, Figure B.

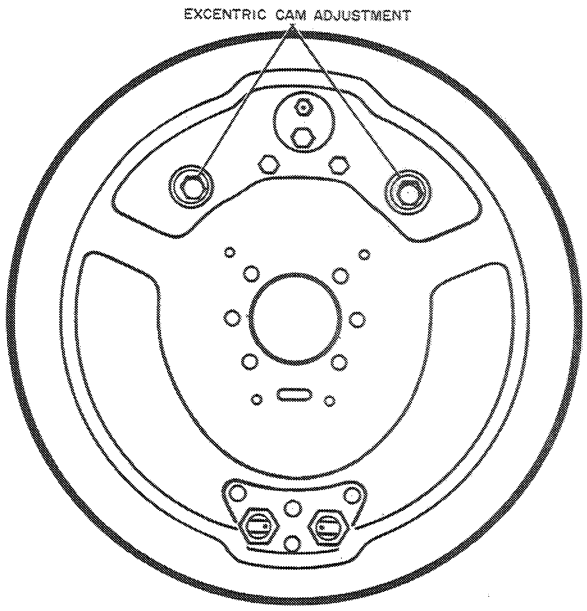

Figure A

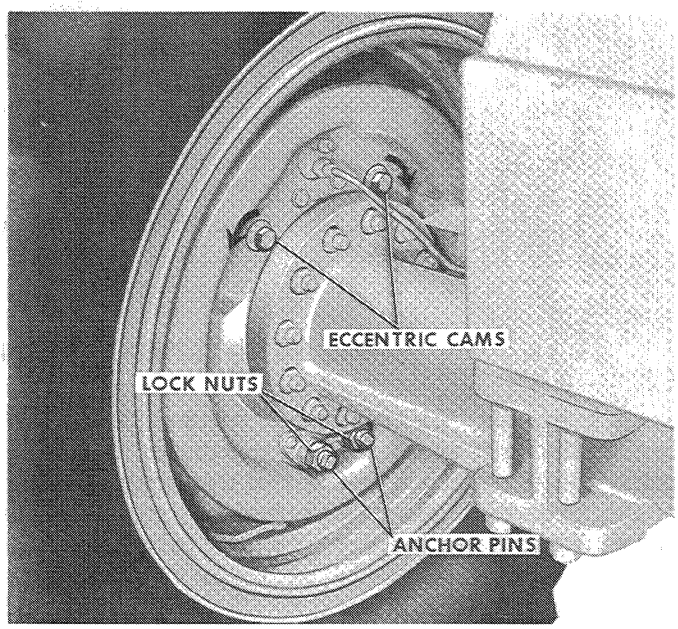

Figure B

REFER TO PAGE W-18 THRU W-21 FOR A MORE DETAILED EXPLANATION OF THE BRAKE SHOE ADJUSTMENTS.

When new linings are installed on the brake shoes, the initial adjustment must be carefully made to both properly locate the curvature of the lining to the drum and to obtain the proper clearance.

Brake System Pressure Check

The first check that must always be made before any adjustments (other than minor brake shoe adjustments) are made, is the brake system pressure check. The pressure check will help diagnose the location and type of difficulty encountered in the brake system.

The Master Cylinder pressure should be 1600 to 1800 PSI when the brake pedal is fully depressed.

The Master Cylinder pressure should be 155 to 160 when the relief valve opens and the high pressure piston takes over.

REFER TO PAGES W-8 THRU W-9 FOR A MORE DETAILED EXPLANATION ON PRESSURE CHECKS.

SERIES "01" HYDRAULIC BRAKE MASTER CYLINDER

General Introduction

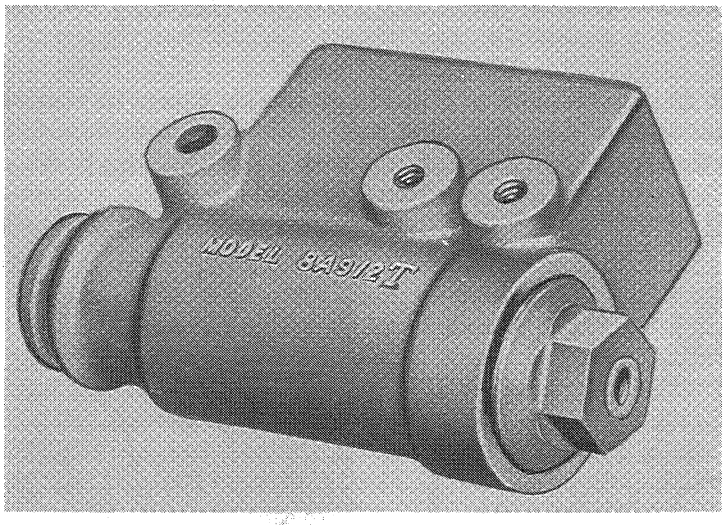

Figure W-1. "01" Hydraulic Brake Master Cylinder

The series "01" hydraulic brake master cylinder used on case loaders is basically two master cylinders inclosed in a single housing - one piston creates the volume of low pressure brake fluid required to expand the brake shoes against the brake drum, this initial build up of brake pressure also operates the transmission cutout valve. The second piston multiplies this pressure to keep the brake shoes forced outward against the drums.

THE MASTER CYLINDER BODY

The master cylinder body is cast in two basic sections. The large main section contains the hydraulic brake fluid reservoir and the bore for the low pressure piston, Figure W-2.

The second or end plug section holds the high pressure piston in alignment with the low pressure piston.

THE MASTER CYLINDER RESERVOIR

The reservoir contains the pressure relief valve and hydraulic brake fluid in excess of brake requirement. Two vented caps provide acess for filling the relief valve adjustment, Figure W-2. The brake system and reservoir, use SAE 70R1 Heavy Duty Brake Fluid.

THE LOW PRESSURE PISTON

The low pressure piston travels inward compressing the brake fluid in the low pressure chamber. The piston is machined to contain two rubber cups, one cup seals the low pressure chamber, the other cup seals the piston from external leakage. Two compressed springs return the low pressure piston when the brake pedal is released. The low pressure piston contains an inner bore which guides the stationary high pressure piston, Figure W-2.

THE LOW PRESSURE RELIEF VALVE

The low pressure relief valve located in the brake fluid reservoir contains a spring loaded piston and pressure adjusting screw plug. The relief valve body is machined to contain a rubber check disc which extends into the low pressure chamber. The valve body is ported to direct the brake fluid from the low pressure chamber to the reservoir during operation of the relief valve, Figure W-2.

THE HIGH PRESSURE PISTON

The high pressure piston is stationary, and held in correct alignment with the low pressure piston. As the low pressure piston moves inward the brake fluid is compressed within the low pressure piston and stationary high pressure piston. The high pressure piston contains a rubber cup seal which seals the high pressure chamber from the low pressure chamber, Figure W-2.

THE END CAP

The end cap holds the stationary high pressure piston in correct alignment with the low pressure piston. Two rubber seals prevent external leakage and pressure loss (fluid transfer) from the high pressure chamber to the low pressure chamber. The end cap also contains a spring loaded check valve, Figure W-2.

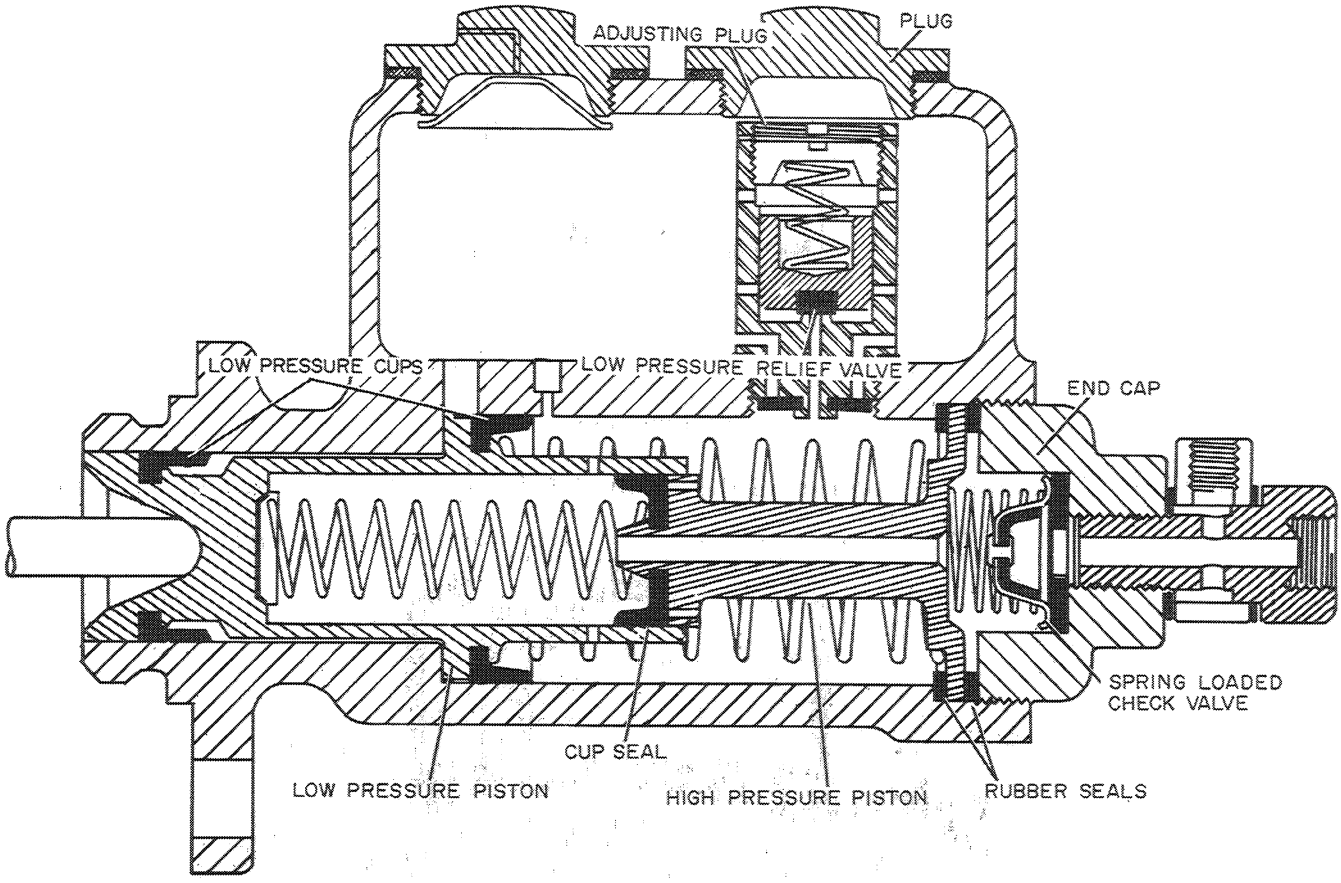

Figure W-2

THE SPRING LOADED CHECK VALVE

The spring loaded check valve is located in the high pressure chamber between the stationary piston and the end cap. The valve consists of a formed rubber disc, disc retaining body, retaining spring and a rubber sealing washer. This check valve prevents draining of the hydraulic reservoir when the brake lines or wheel cylinders are removed for repair, Figure W-2.

SERIES "01" HYDRAULIC BRAKE MASTER CYLINDER

How It Works

The following pages of this section contain a series of schematic flow diagrams of the Series "01" Hydraulic Brake Master Cylinders used on Case 4 Wheel Drive Unit Loaders. The flow diagram with the accompaning descriptions will aid you in understanding the brake system and help you locate, diagnose and properly correct any difficulties which may occur in the system.

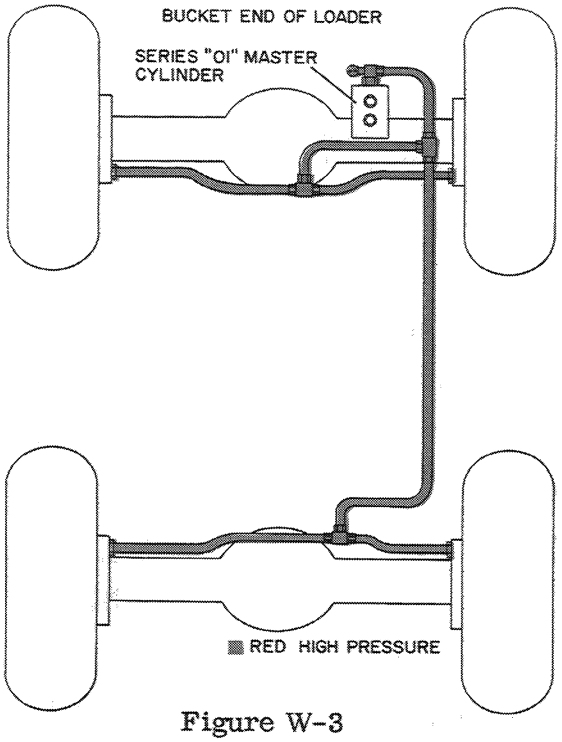

Figure W-3

Figure W-3, illustrates the location of the Series "01" Master Cylinder in the brake system.

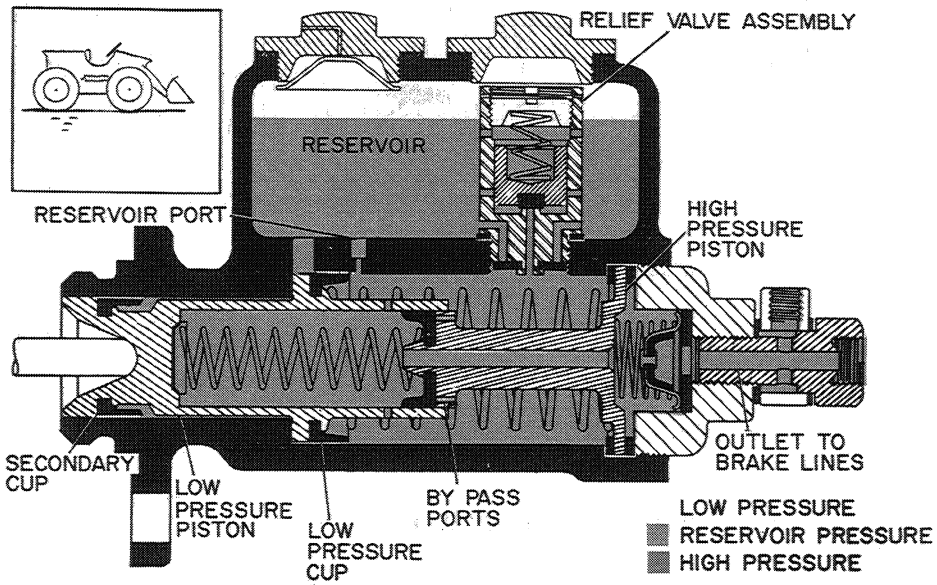

Figure W-4. Brakes Not Applied(Neutral)

The hydraulic brake fluid from the reservoir enters the low pressure chamber thru the reservoir port located slightly ahead of the low pressure cup. When the brake pedal is applied the low pressure piston moves forward building up pressure in the low pressure chamber.See Figure W-5.

This build up of pressure in the low pressure chamber forces the check valve disc to seal off the return ports in the relief valve assembly. Brake fluid is then forced thru the by-pass ports located in the stationary high pressure piston into the high pressure chamber and brake lines, See Figure W-5.

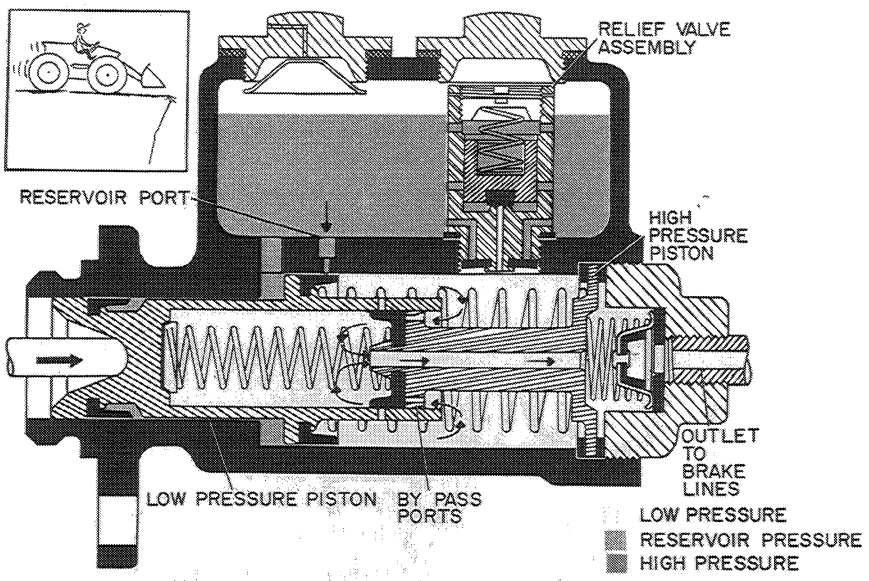

Figure W-5. Beginning Of Brake Application

Continued forward movement of the low pressure piston increases the pressure in the low pressure chamber forcing the brake shoes firmly against the brake drums. When the pressure in the low pressure chamber reaches 155 to 160 PSI the relief valve piston is forced upward uncovering the escape ports venting the low pressure chamber to the reservoir. Refer to Figure W-6.

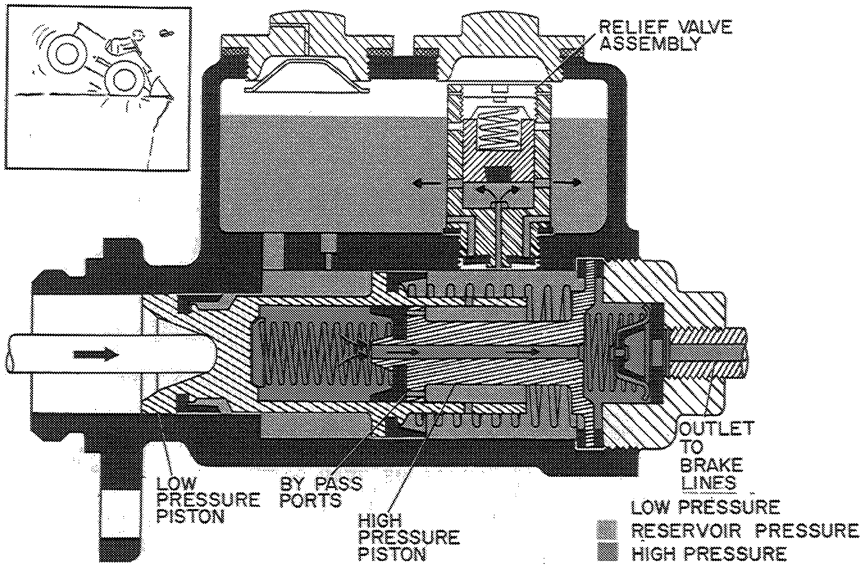

Figure W-6.Brakes Fully Applied

The piston in the high pressure chamber has now taken over completely closing off the by-pass ports in stationary piston and developing up to 1600 lbs. brake pressure. See Figure W-6.

When the brake pedal is released the low pressure piston return springs force the low pressure piston rearward allowing the high pressure brake fluid to return to reservoir pressure. The brake fluid displaced behind the low pressure piston escapes through the reservoir return port, to the reservoir. The relief valve check valve disc unseats allowing the brake fluid in the reservoir to return to the low pressure chamber thru the relief valve return ports. Refer to Figure W-4.

HYDRAULIC BRAKE SYSTEM PRESSURE CHECK

Pressure checks must always be made to diagnose the location and type of difficulty that has been encountered in the brake system. The pressure checks must be made in the sequence listed on the following pages - failure to follow this exact sequence could result in a misleading diagnosis.

The brake system pressure check must be made as follows:

1. Remove the stop light switch from the master cylinder, Figure W-7.

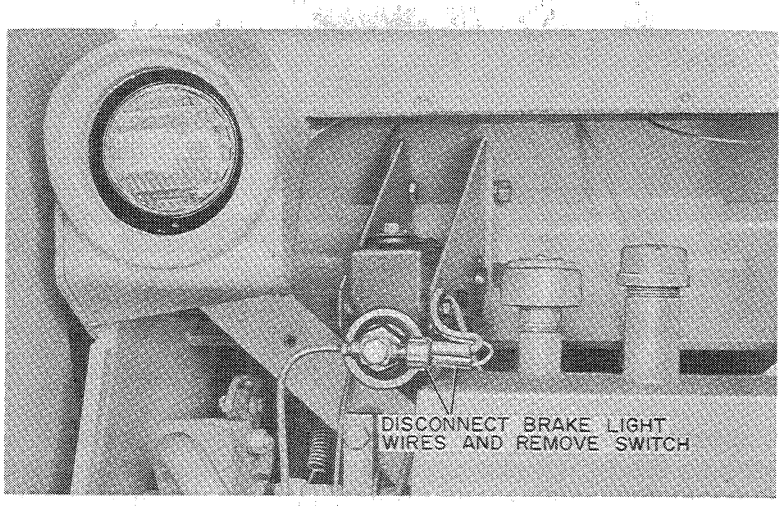

Figure W-7

2. Then install a 2000 PSI Pressure Gauge, Figure W-8.

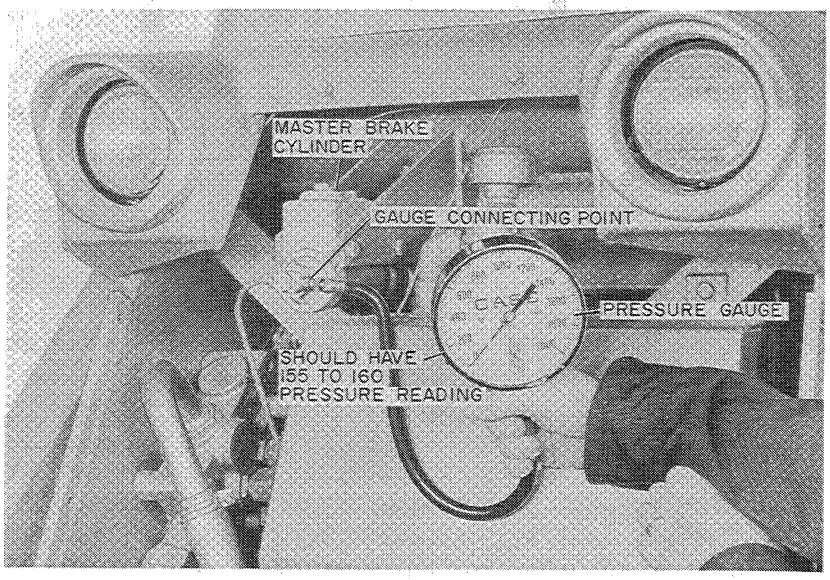

Figure W-8

3. Slowly depress the brake pedal, the transition from low to high pressure will be noticed by a slight "give" in the brake pedal when the relief valve opens. This transition must occur at 155 to 160 PSI.

If this transition does not occur at 155 to 160 PSI - Remove the plug from the master cylinder reservoir, Figure W-9, and adjust the pressure relief valve - Turn the adjusting plug clockwise to increase the relief valve pressure and counter clockwise to decrease the pressure. Caution: Use a wide bladed screw driver to turn the adjusting plug or it may become damaged to the point where it cannot be adjusted.

IMPORTANT

The correct adjustment of this "transition" from low to high pressure piston at 155 to 160 PSI cannot be overemphasized - Failure to have the adjustment set correctly will result in poor brakes.

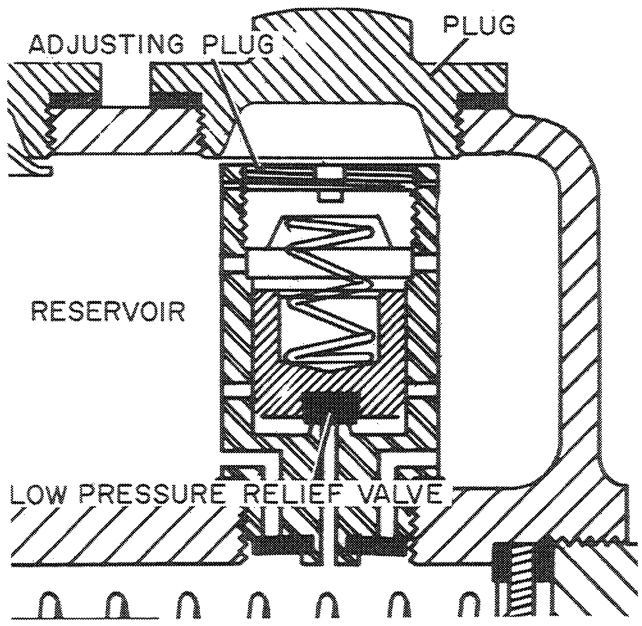

Figure W-9

If the transition setting of 155 to 160 PSI cannot be obtained - Refer to Nos. 4 & 5 on Page W-36 and No. 1 on Page W-37.

3. Apply the brake pedal fully, a gauge pressure of 1600 to 1800 PSI should be obtained. If this pressure cannot be obtained, refer to the Service Suggestion Section, Page W-26.

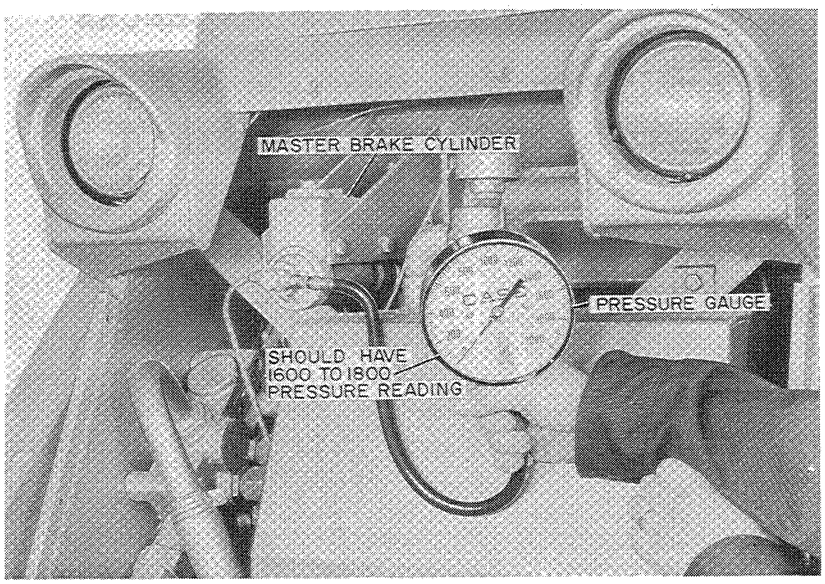

Figure W-10

4. Release the brake pedal, the brake pressure should drop to 10 to 12 PSI. Repeat steps 3 and 4 several times to make certain the brake line pressure returns to 10 to 12 PSI. If it does not, refer to the Service Suggestions Section, Page W-36.

IMPORTANT

BEFORE REMOVING OR DISASSEMBLING THE SERIES 01 MASTER CYLINDER, MAKE SURE THE "MINOR BRAKE SHOE ADJUSTMENT", (PAGE W-3,) AND PRESSURE CHECKS (PAGE W-8 AND W-9) HAVE BEEN MADE FIRST - THESE MINOR ADJUSTMENTS WILL CURE MOST BRAKE PROBLEMS.

REMOVAL OF THE MASTER CYLINDER FROM LOADER

Before removing the brake master cylinder from the loader, thoroughly steam clean the master cylinder, brake line and area around the line and cylinder to prevent dirt from entering the brake system during removal and installation.

To remove the Series "01" master cylinder from the loader, proceed as follows:

1. Remove both the large and small front cover panels from the loader, Figure W-11.

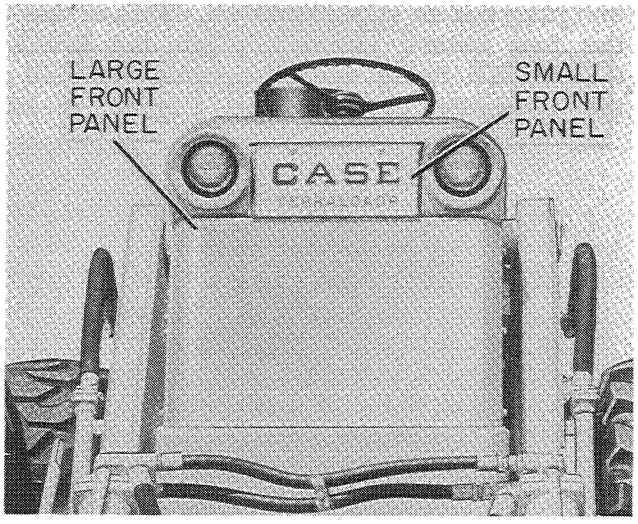

Figure W-11

2. Disconnect the lines and wires as illustrated in Figure W-11.

3. Remove the front and rear mounting bolts. Figure W-12.

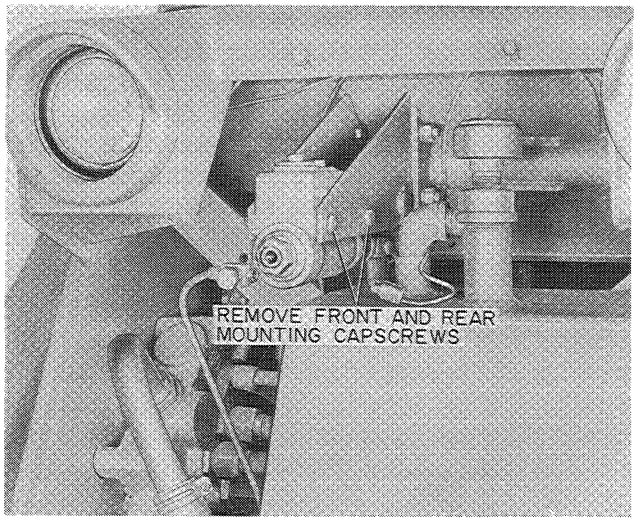

Figure W-12

4. Remove push rod bolt from master cylinder and reassemble on brake push rod.

A Clean, Well Equipped Service Shop Builds Customer Confidence and Volume Sales.

DISASSEMBLY OF THE HYDRAULIC MASTER BRAKE CYLINDER

General

With the master brake cylinder removed from the loader, clean the exterior of the brake cylinder and the work area where the brake valve will be disassembled.

STEP 1

Place brake cylinder in horizontal position in a vise. Remove the forward filler plug which will expose the slotted top of the Relief Valve Assembly. Remove the relief valve assembly by turning out, counter clock-wise. It is recommended that a #VT-2000 Relief Valve Tool be used for this operation. It is possible, however, to accomplish this by means of a very wide bladed screw driver. If such a screw driver is used make certain that it is wide enough to fit into both notches on the Relief Valve Body. The Relief Valve Assembly cannot be removed by unscrewing the slotted center screw, as this is for adjustment purposes only.

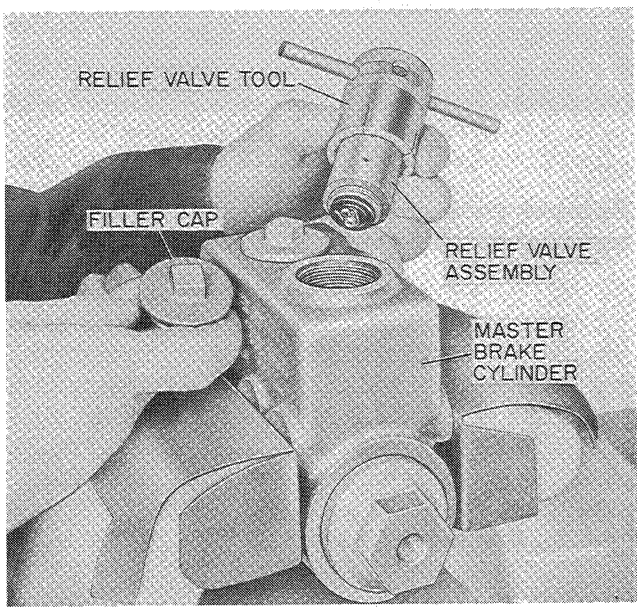

Figure W-13. Step 1

Loosen the large end plug by means of a 1-5/16" wrench. This plug will be very tight and it is recommended that the machined face of the hex portion of this plug be tapped smartly with a hammer before attempting to loosen it.

In doing this be careful not to make sharp dents or impressions near the threaded outlet hole. If this surface is dented, it will make it difficult to obtain a tight seat when later connecting the brake line adapter.

After the end plug has been loosened, unscrew by hand and while removing keep a reasonably heavy pressure against the plug. Frequently the primary piston will follow the end plug out as it is removed. This is due to the two return springs within the BRAKE CYLINDER being seated against the base of the primary piston. (See Figure W-14).

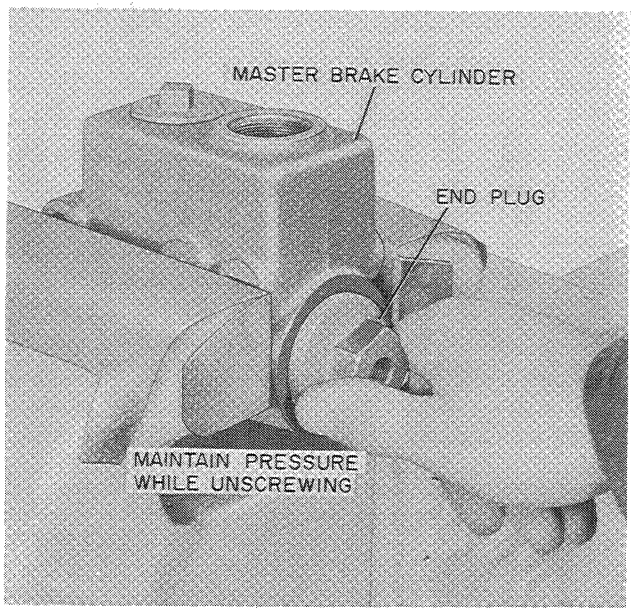

Figure W-14. Step 2

STEP 3

If the primary piston does not follow the end plug out as described in the previous paragraph, it will be necessary to free the end plug gasket from hanging in the threaded portion of the cylinder housing, Figure W-15.

Free this gasket by pushing securely against the base of the primary piston with one hand and prying out the end plug gasket by means of a thin bladed screw driver with the other. While performing this, remember to keep as heavy a pressure as possible against the base of the primary piston, Figure W-15.

CAUTION

Remember that the internal return springs of the cylinder are seated against the base of the primary piston and it is possible that this piston may fly out with considerable force if released suddenly.

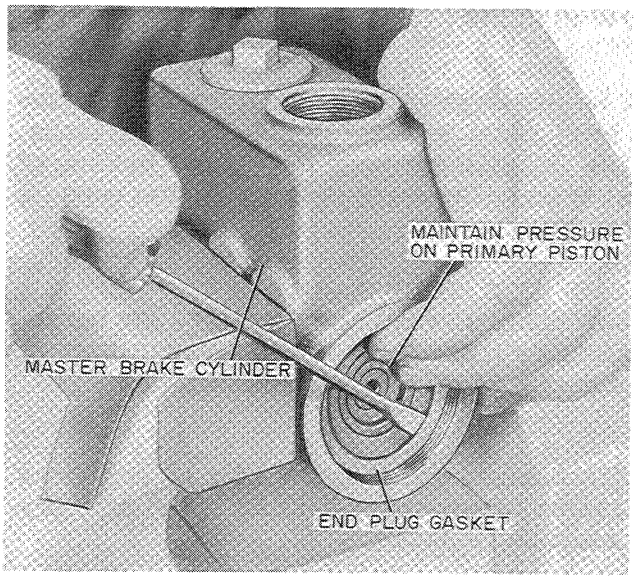

Figure W-15. Step 3

STEP 4

Removal of the remaining internal parts of the brake cylinder after the end plug has been removed is very simple.

As previously described, the primary piston upon being freed will "pop out". The large and small return springs may then be pulled from within the cylinder as they are free at both ends. Next, remove the inside plug gasket. After this gasket has been taken out the second piston may be removed by forcing through with a screw driver or rod from the push rod end, Figure W-15.

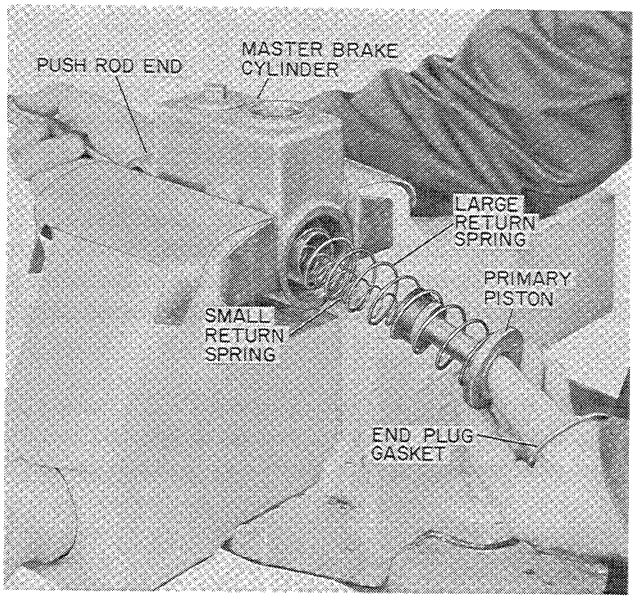

Figure W-16. Step 4

INSPECTION OF THE BRAKE MASTER CYLINDER

With the Brake Master Cylinder disassembled, the component parts can be easily cleaned and inspected for wear, scratches or cracks. Any parts that are excessively worn or damaged must be replaced. All metal parts of the brake master cylinder can be washed in a mineral spirit solution. Before assembly, all parts should be dipped in brake fluid.

Master Cylinder Components

The Master Cylinder Body, Figure W-17, must be thoroughly cleaned and inspected after the component parts are removed. The cylinder body must be carefully checked for nicks, grooves and cracks. Any nicks, grooves or burrs in the cylinder body may cause binding of the secondary piston or cause damage to the piston or cause damage to the piston cups. If the cylinder body is nicked or grooved, it must be replaced.

The Secondary Piston, Figure W-17, must be thoroughly cleaned and inspected for burrs, nicks or grooves that may cause damage to the master cylinder body or improper seating of the secondary piston cups. If the secondary piston is damaged it must be replaced.

The Primary Piston, Figure W-17, must be thoroughly cleaned and inspected for nicks, burrs or grooves that may cause damage to the secondary piston or improper seating of the primary cups and seals. If the primary piston is damaged it must be replaced.

The Relief Valve, Figure W-17, must be thoroughly cleaned and inspected when removed from the master cylinder body. It must be checked for nicks, burrs or grooves that may cause sticking of the valve plunger and for weak or broken plunger spring. If the relief valve is damaged, it must be replaced.

The End Cap, Figure W-17, must be thoroughly cleaned and inspected for damaged threads and nicks or burrs that may cause improper seating of the oil seals and check valve. If the threads are damaged the end cap must be replaced.

Oil Seals, Cups and Springs, Figure W-17, must always be replaced any time the master cylinder is disassembled or if leakage occurs.

INSPECTION OF THE BRAKE MASTER CYLINDER

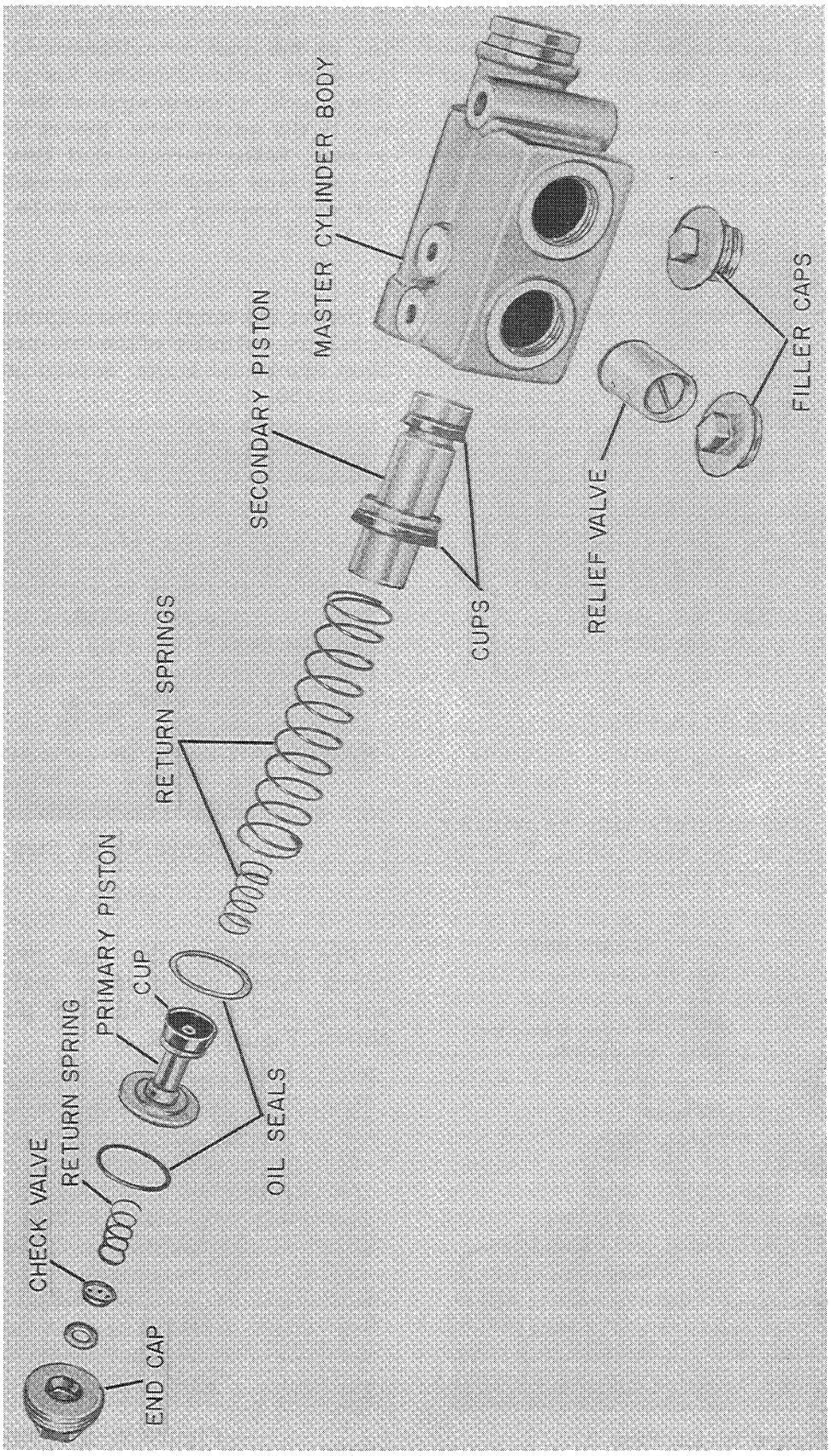

Figure W-17

ASSEMBLY OF THE BRAKE MASTER CYLINDER

STEP 1

Place the cylinder housing, threaded end up, in a vertical position in a vise. Set a socket (about 5/8" size) on the vise beam so that it will project onto the smaller bore of the cylinder housing. This socket will hold the secondary piston up so that the high pressure piston may be installed in a later step.

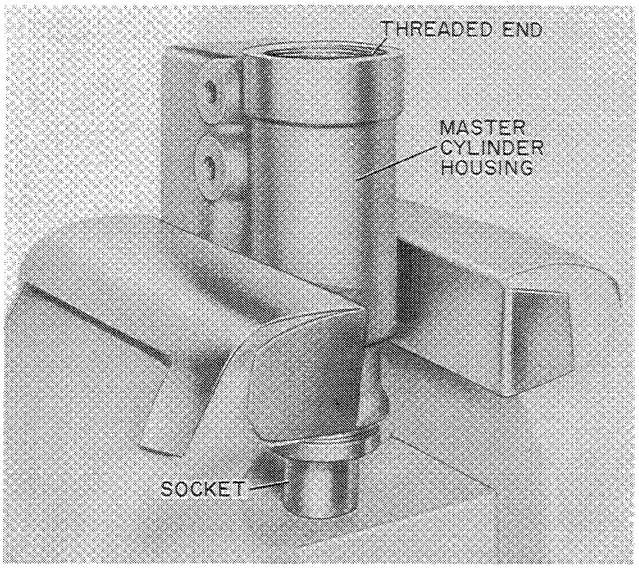

Figure W-18. Step 1

STEP 2

Tighten the vise securely with the cylinder housing resting on the vise beam. Next insert the low pressure piston, Figure W-19.

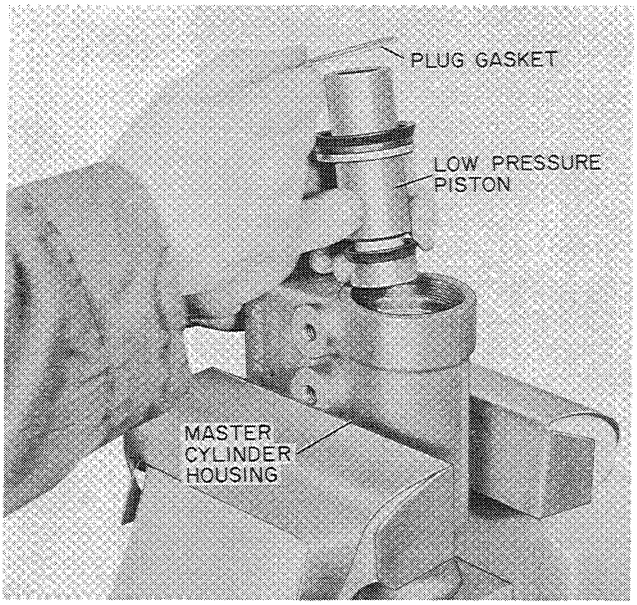

Figure W-19. Step 2

When doing this make certain that the two cups are on correctly. The open or forward side of these cups must be in the same direction as the open or cylinder end of the low pressure piston. Push the low pressure piston down until it stops against the socket standing in the small bore. Insert this inside plug gasket, being certain that this gasket is up square and snug to its shoulder within the cylinder housing, Figure W-19.

STEP 3

Insert the small return spring into the high pressure cylinder of the low-pressure piston. Next insert the large return spring, Figure W-20.

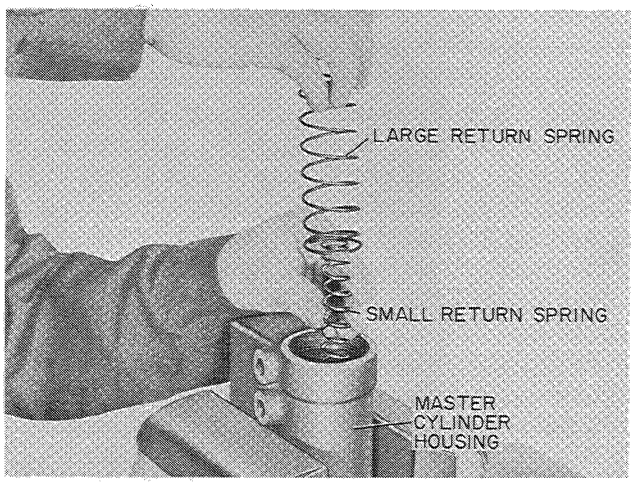

Figure W-20. Step 3

STEP 4

Pre-assemble the high pressure piston check valve, check valve seat, check valve spring plug gasket and end plug in position shown, Figure W-21.

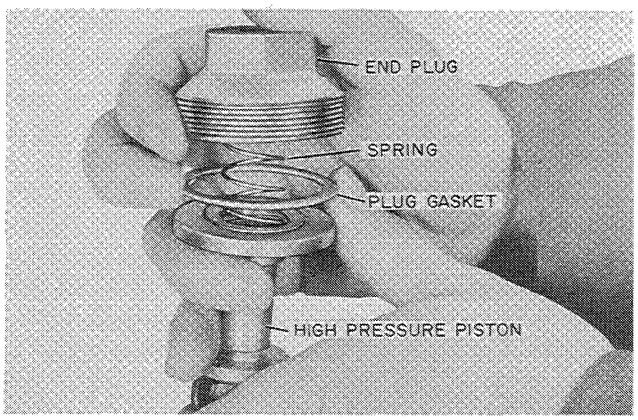

Figure W-21. Step 4

STEP 5

Using both hands compress the check valve spring until the base of the high pressure piston seats against the gasket and the gasket seats to the end plug. Make certain enough pressure is held on this assembly to keep the high pressure piston base, end plug gasket and end plug in good alignment, Figure W-22.

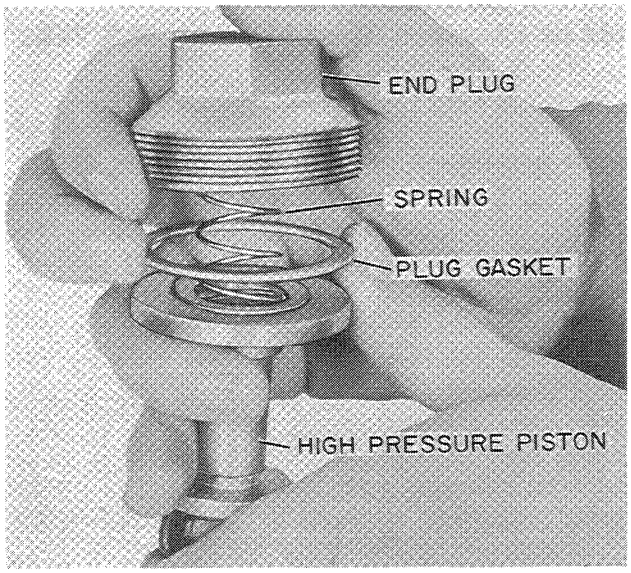

Figure W-22. Step 5

STEP 6

While securely holding the parts in alignment insert the assembly and by constant downward pressure and through a slight rotating motion, enter the high pressure piston into its cylinder.

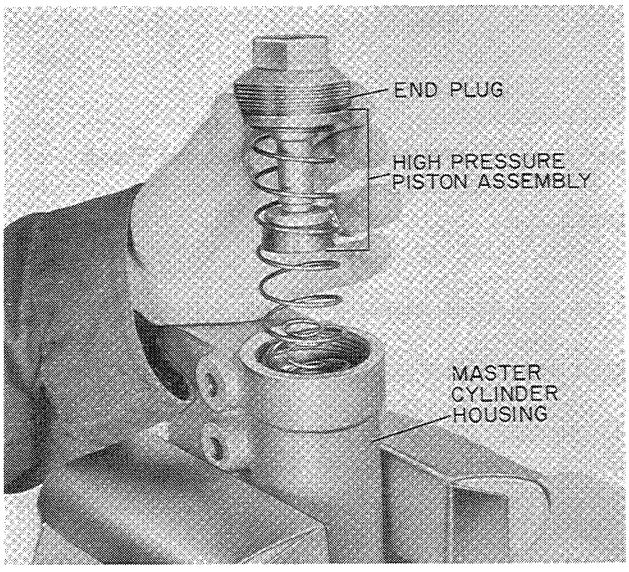

Figure W-23. Step 6

When installing the piston use extreme care to prevent damaging or folding back of high pressure cup.

STEP 7

While maintaining downward pressure with one hand, screw the end plug in. Watch the end plug gasket carefully during this operating to insure against its misalignment which will make it difficult to start threads, Figure W-24.

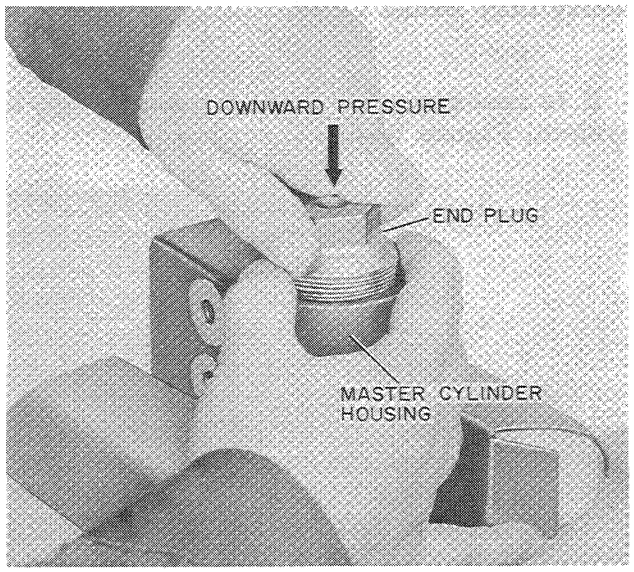

Figure W-24. Step 7

Tighten end plug very tightly. It is recommended that a heavy wrench be used and struck smartly several times to insure proper sealing of the end plug gasket.

BLEEDING THE HYDRAULIC BRAKE SYSTEM

Whenever the main brake fluid line is disconnected from the master cylinder - it will be necessary to bleed the brake system at ALL FOUR WHEELS.

Whenever a brake fluid line is disconnected from any individual wheel - that WHEEL CYLINDER must be bled.

When filling either the Hydraulic Brake Reservoir or Pressure Bleed Tank use SAE 70R1 Heavy Duty Brake Fluid.

It is recommended that a pressure type bleed tank be used for bleeding the hydraulic brake system, Figure W-25.

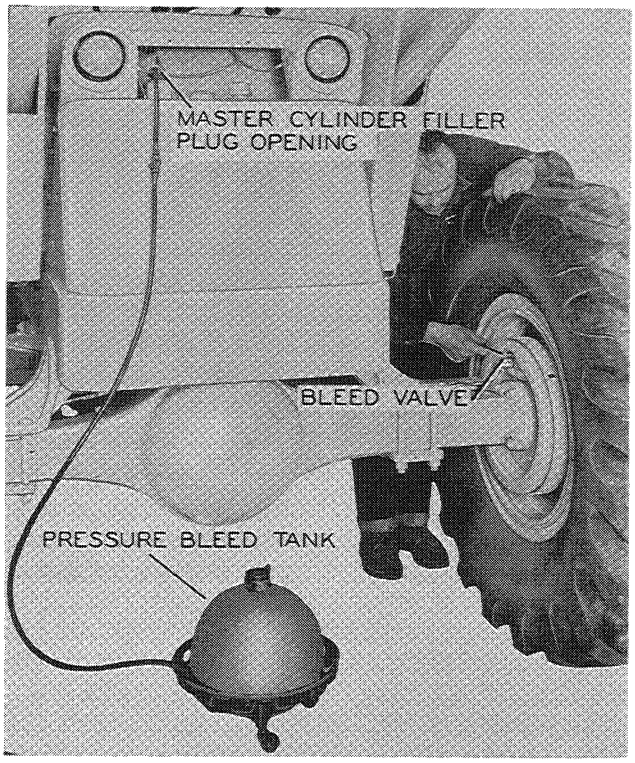

Figure W-25. Bleeding Hydraulic Brake System Using A Pressure Type Bleed Tank

To bleed the brake system proceed as follows:

1. Fill and bleed the pressure tank according to the tank manufacturer's instructions.
2. Connect the pressure tank to the master cylinder filler plug opening, Figure W-25.
3. Loosen the bleeder valve on the wheel cylinder. Observe flow of brake fluid from the bleed valve - When air bubbles cease to appear close bleed valve, Figure W-25.
4. Repeat this operation on all wheel cylinders that need bleeding.

SERVICING THE
"H" AND "DH" SERIES
BRAKE LININGS, BRAKE DRUM
AND
WHEEL CYLINDERS

BRAKE SHOE ADJUSTMENT (MINOR)
RIGID FRONT AXLE "DH" SERIES BRAKES

The following procedure is recommended when adjustment of the rigid front axle brake shoe is required.

1. Block the rear wheels to prevent the loader from moving.

2. Raise one wheel until the tire is clear of the floor.

3. Remove the metal covers from the adjusting slots, insert a brake adjusting spoon through the slotted hole to engage the lugs on the adjusting bolt. To expand the shoes, move the handle of the adjusting spoon down while in the left hand slot, up while in the right hand slot. Refer to Figure W-26.

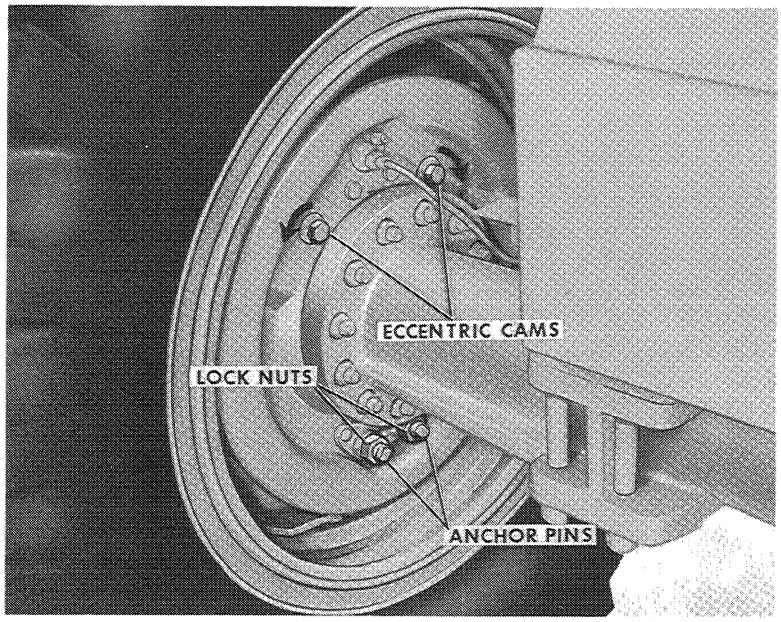

Figure W-26

4. Adjust the brake shoe until the lining is tight against the drum and the wheel can no longer be turned then back off the adjusting bolt until the wheel turns freely. Generally 4 to 6 click adjustments are required.

5. Adjust the other brake shoe on the same wheel according to paragraphs 3 and 4 above.

6. Replace the adjusting slot covers, lower the wheel.

7. Raise the opposite wheel and adjust the brake shoes according to paragraphs 3,4,5 and 6.

BRAKE SHOE ADJUSTMENT (MINOR)

STEERING REAR AXLE "H" SERIES BRAKES

Minor brake shoe adjustment to compensate for normal brake lining wear is made at the excentric cams only.

1. Block the front wheels to prevent the loader from moving.

2. Raise one wheel until the tire is clear of the floor.

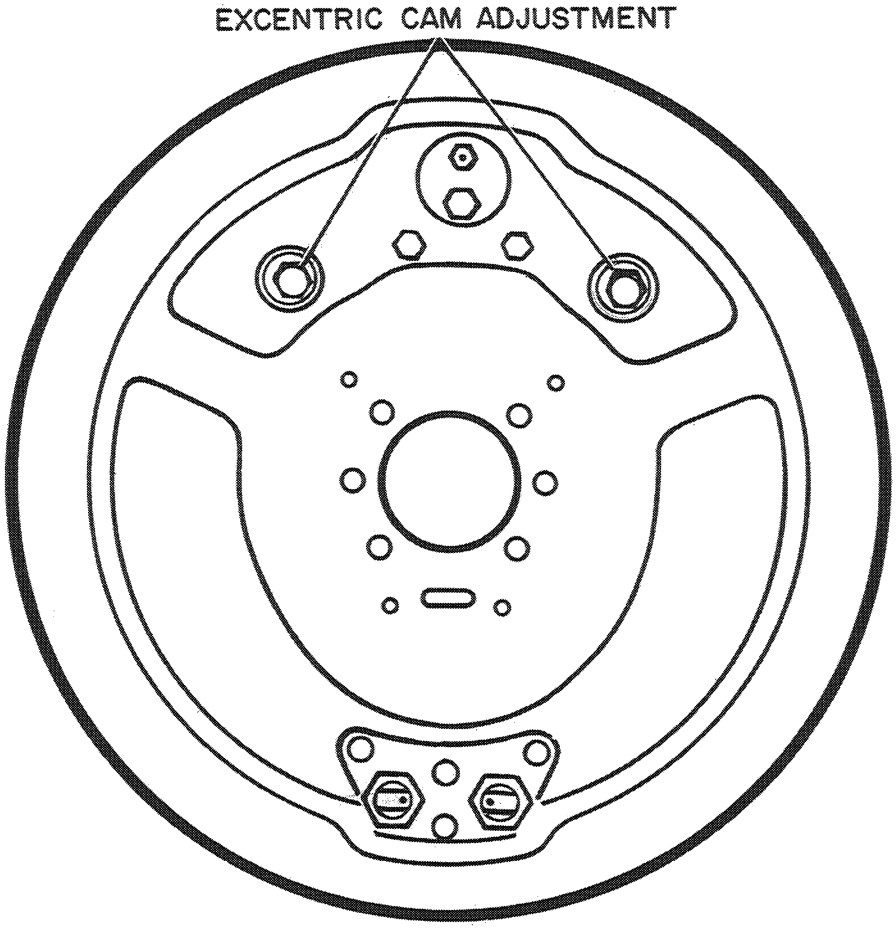

Figure W-27

3. Turn the excentric cam as shown, Figure W-27, until the brake shoe contacts the drum and the wheel can no longer be turned, then back off the excentric cam sufficiently to permit a free rolling wheel.

4. Raise the opposite wheel and adjust the brake shoes according to paragraphs 1, 2 and 3 above.

SERVICING THE RIGID AXLE "DH" SERIES BRAKES

Periodic brake shoe adjustment, cleaning, inspection and lubrication of brake equipment will increase the service life of the brake system. Eventually, depending on severity of operation, the brake shoes will require new brake linings and the hydraulic wheel cylinders will require rebuilding.

The "DH" Series brake is commonly referred to as a duplex brake, brake shoes, liner assemblies and return springs are identical which simplifies assembly and disassembly. The following step by step procedure is recommended:

After the machine is raised up and blocked securely the wheel hub and planetary can then be removed. Refer to Section U.

Brake Shoe Disassembly

1. Remove the cotter keys from shoe guide bolts. Refer to Figure W-28.

2. Install a wheel cylinder clamp to prevent forcing the pistons out of the cylinders.

3. Hold the brake shoe against the brake backing plate and remove the guide bolt nut and washer.

4. The brake shoe can now be moved to release the tension of the brake shoe springs.

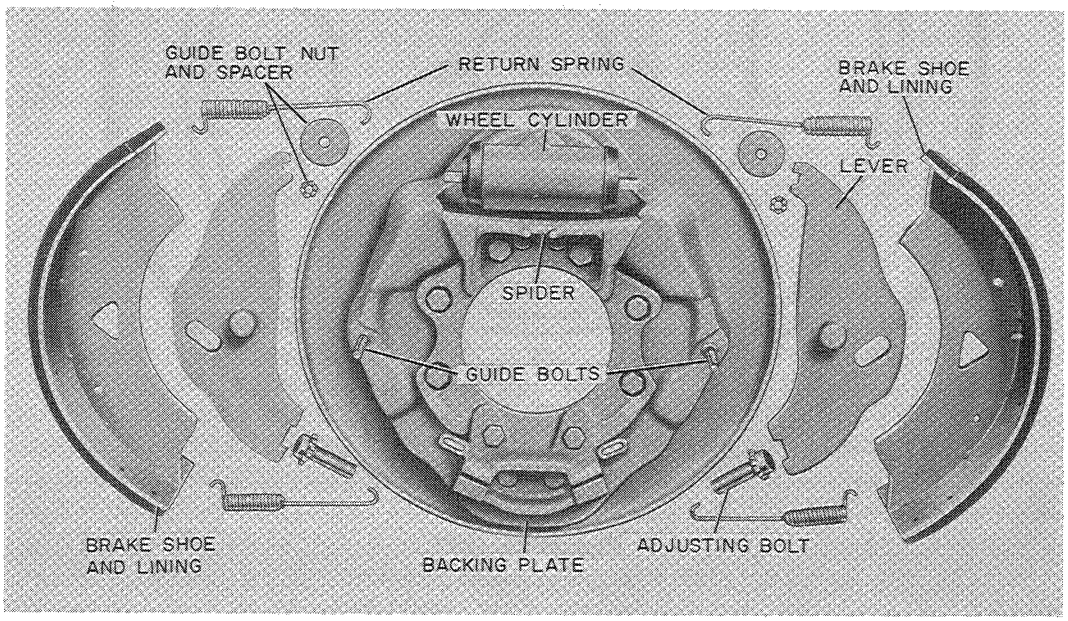

Figure W-28

5. Unhook the return springs from the spider, adjustment bolt and shoes. Remove the shoes.

6. For complete disassembly, disconnect the hydraulic brake lines. Remove the wheel cylinder cap screws and wheel cylinder.

7. Remove the brake adjusting bolts.

Inspection Of The "DH" Series Brake Assembly

GENERAL

Whenever the brake is disassembled the brake shoe, lining, excentric cams and wheel cylinders must be carefully cleaned and inspected for wear, scratches and cracks. Any parts that are worn or damaged must be replaced.

THE BRAKE SHOE

The Brake Shoes, Figure W-29, must be carefully cleaned and inspected for cracks, wear at anchor pin holes and wear at excentric cam contact areas. If the shoe is cracked or worn it must be replaced.

THE BRAKE SHOE LININGS

The Brake Shoe Linings, Figure W-29, must be carefully inspected for wear, loose rivets and grease saturation. If the brake shoe linings are excessively worn or saturated with grease or oil, the linings must be replaced. If loose rivets are found, the rivets must be replaced.

THE BRAKE DRUM

The Brake Drum Figure W-29, must be thoroughly cleaned and inspected for cracks scoring or any other damage that may cause brake failure. If score marks or nicks are found within the drum, it can be rebored. Refer to Page W-23. Scoring of the brake drum is most often caused by worn linings or loose rivets.

RETURN SPRINGS AND LOCK RINGS

All Return Springs and Lock Rings, Figure W-29, should be replaced with new parts during assembly of a complete overhaul job.

THE WHEEL CYLINDER ASSEMBLY

It is not necessary to remove the wheel cylinders every time the brakes are removed or inspected. The only time the wheel cylinder should be removed is when leakage is visible around the cylinder.

The Wheel Cylinder Body

The Wheel Cylinder, Figure W-30, when removed from the backing plate must be thoroughly cleaned and inspected for score marks, deep grooves and burrs. If the wheel cylinder is damaged it must be replaced.

The Wheel Cylinder Piston

The Wheel Cylinder Pistons, Figure W-30, must be carefully cleaned and inspected for scratches, burrs and deep grooves that may cause leakage around the pistons. If the piston is scored or damaged it must be replaced.

The Wheel Cylinder Cups And Boots

The Wheel Cylinder Cups and Boots must always be replaced during assembly of a complete overhaul.

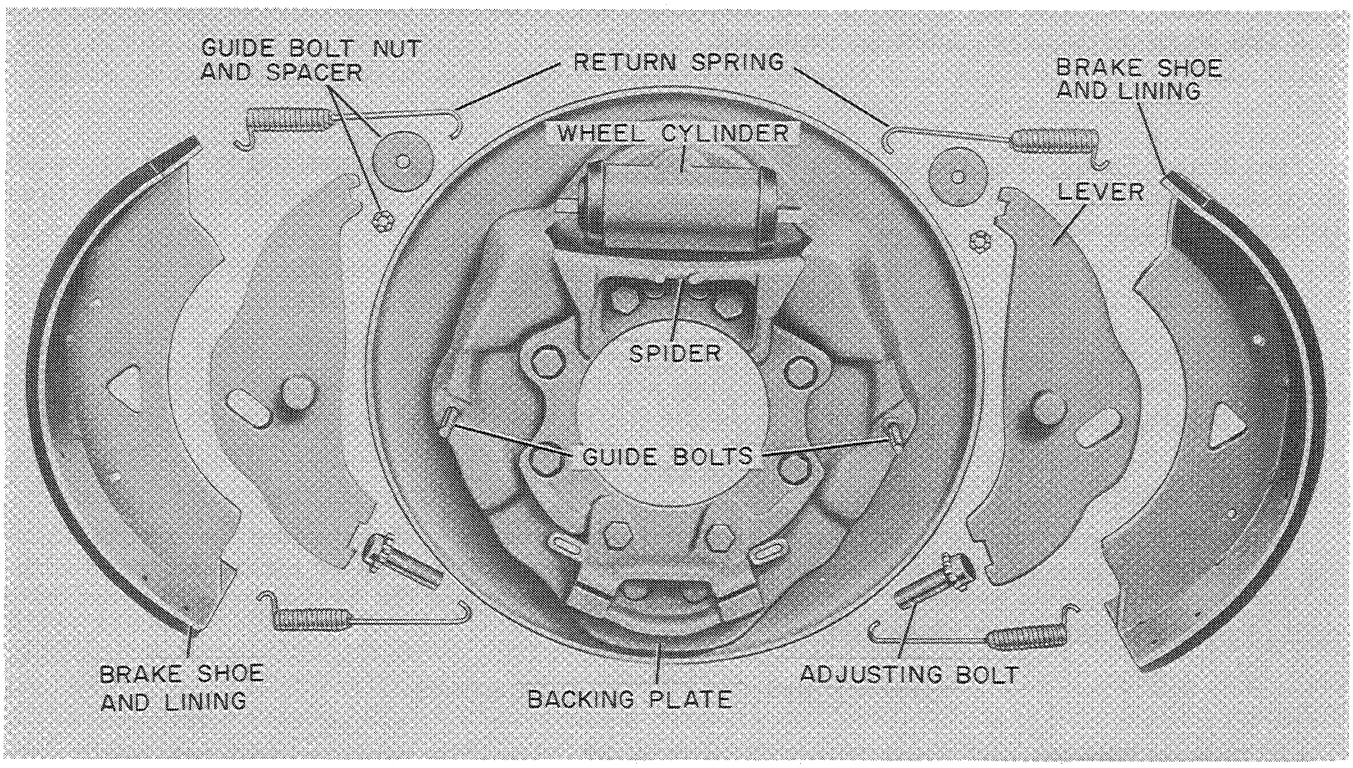

Figure W-29

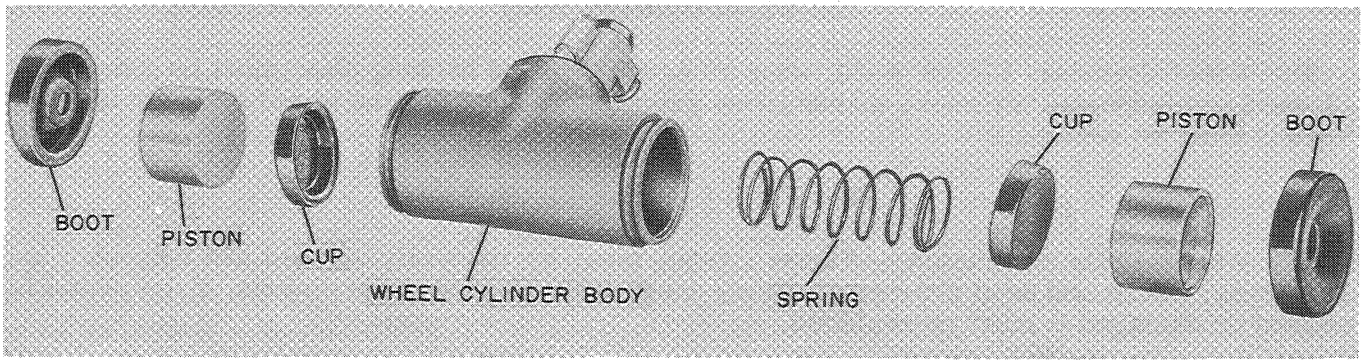

Figure W-30

INSTALLATION OF NEW BRAKE LININGS

If new linings are to be installed on the brake shoe proceed as follows:

1. Lining and shoe contact faces must be clean before clamping linings in position.

2. Then clamp the lining to the shoe with "C" clamps so the rivet holes in both pieces are in alignment. Making sure the lining is clamped firmely to the shoe.

3. Drive the rivets squarely into the holes using a 7/16" flat head drift.

4. Form the rivet heads with a 13/64 tubular rivet set following the sequence shown in Figure W-31, working from heel to toe.

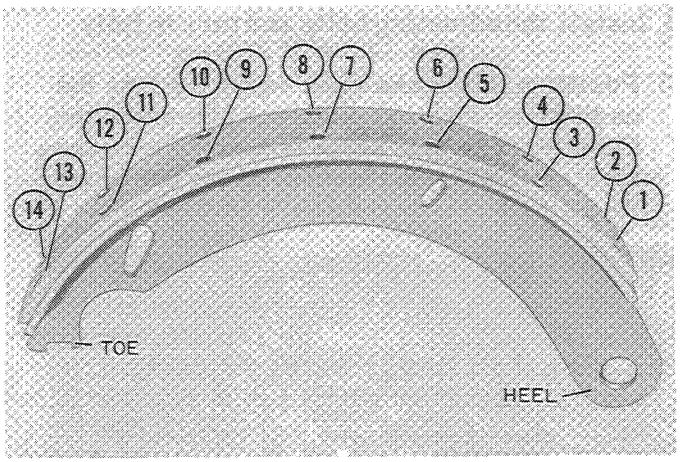

Figure W-31

To compensate for material removed when brake drums have been rebored oversized liner should be used. There are two sizes: one marked x that is 1/16" larger and one marked xx that is 1/8" larger.

When reboring a brake drum the drum should be rebored in increments of 1/16" to insure proper fit with oversize lines.

Reboring Of The Brake Drum

Whenever the brake drum is scored or grooved, the drum should be rebored to insure good contact between the drum and brake shoe lining. Reboring of the drum will help in obtaining the 80% contact required between the drum and lining for good brakes.

Before reboring a brake drum the drum must be checked to see if it has been rebored before. The diameter when new is 15.000". If in measuring the drum, the diameter is larger than 15.000" the drum has been rebored before. If the diameter of the drum is 15.080" the drum can not be rebored, it must be replaced.

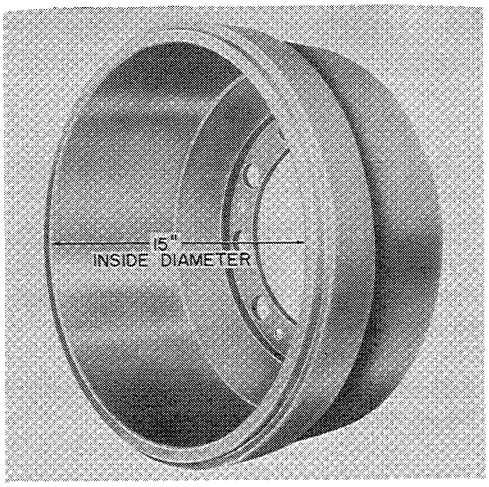

Figure W-32

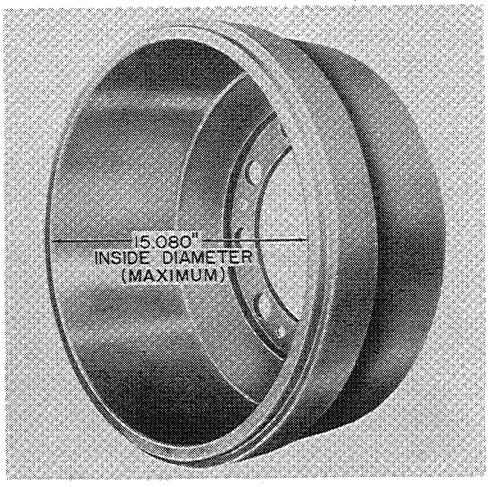

Figure W-33

When reboring a brake drum, only the minimum boring required to remove any score marks or grooves should be done. A maximum of .080" is removed, the drum will be weakened and result in poor brakes or cracking of the brake drum.

ASSEMBLY OF THE "DH" SERIES BRAKE

1. Install the wheel cylinder and push rods.

2. Install the adjusting bolts and turn in fully.

3. Position the brake shoe lever so that the ends mate with the push rod at the top and the adjusting bolt at the bottom. There are right and left hand levers. Refer to Figure W-34.

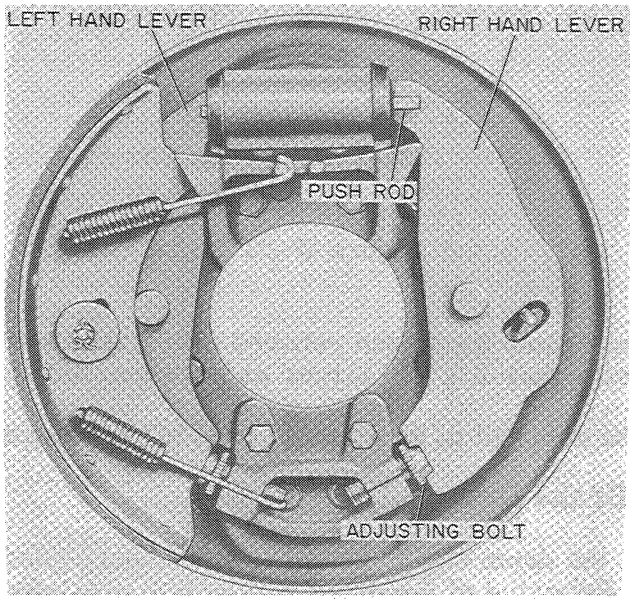

Figure W-34

4. Hook the short ends of both brake shoe springs into the brake shoe web holes.

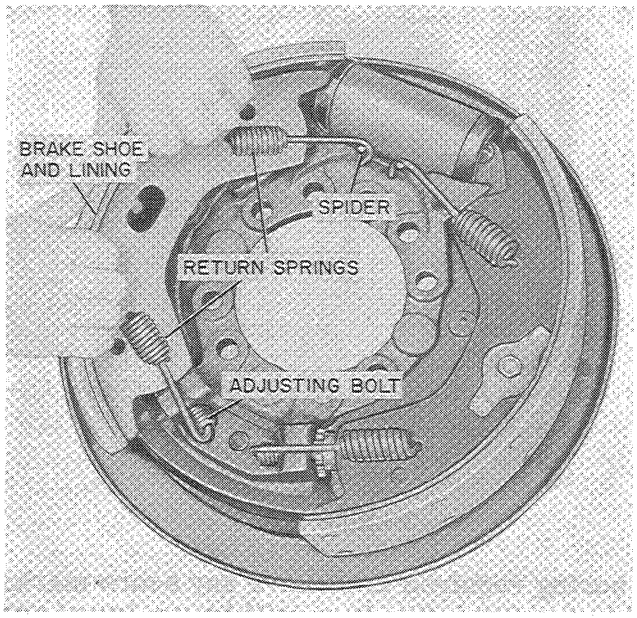

Figure W-35

5. Hook the long end of the upper spring on the spider and the long end of the lower spring in the adjusting bolt end. Refer to Figure W-35.

6. With both hands rotate the brake shoe over the brake lever and guide into position.

7. Hold the brake shoe against the lever with one hand and install the guide bolt washer and nut.

8. Tighten the guide bolt nut so that the brake shoe and lever will have a clearance of .015" at the guide bolt washer. Refer to Figure W-36.

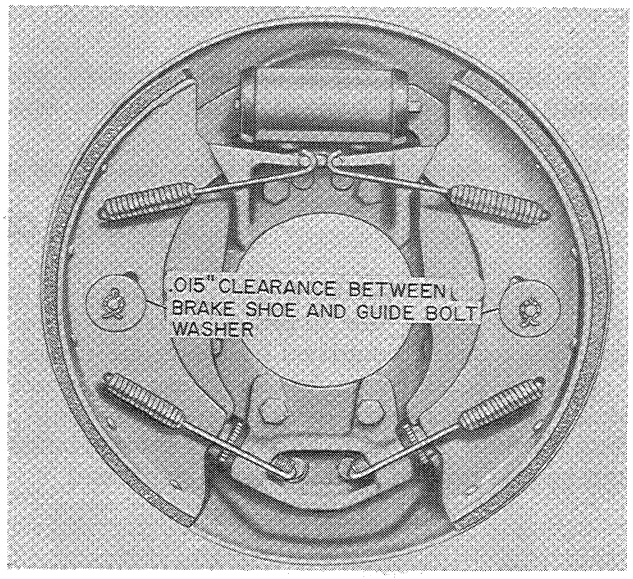

Figure W-36

9. Install the cotter key in the guide bolt nut.

10. Connect the brake lines. Bleed the brake system after all brakes have been reassembled and the lines connected. Refer to Page W-18.

11. Adjust the brake shoes as described on Page W-20.

SERVICING THE STEERING AXLE "H" SERIES BRAKES

Periodic brake shoe adjustment, cleaning, inspection and lubrication of the brake equipment will increase the service life of the brake system. Eventually, depending on severity of operation, the brake shoes will require new linings and the hydraulic wheel cylinders will require rebuilding.

The "H" Series Brake is commonly referred to as a light duty, two shoe type brake, mounted on a backing plate which also serves as a dust shield. Adjustable anchor pins provide a means of centering the brake shoe arc in relation to the drum and secondary or minor adjustments are made by rotating the excentric cams.

After the loader is raised up and blocked securely, the wheel hub and planetary can then be removed. Refer to Section U.

Brake Shoe Disassembly

1. Disconnect the brake shoe return spring, Figure W-37.

2. Remove the anchor pin "C" washers and guide pin locks and washers, Figure W-37.

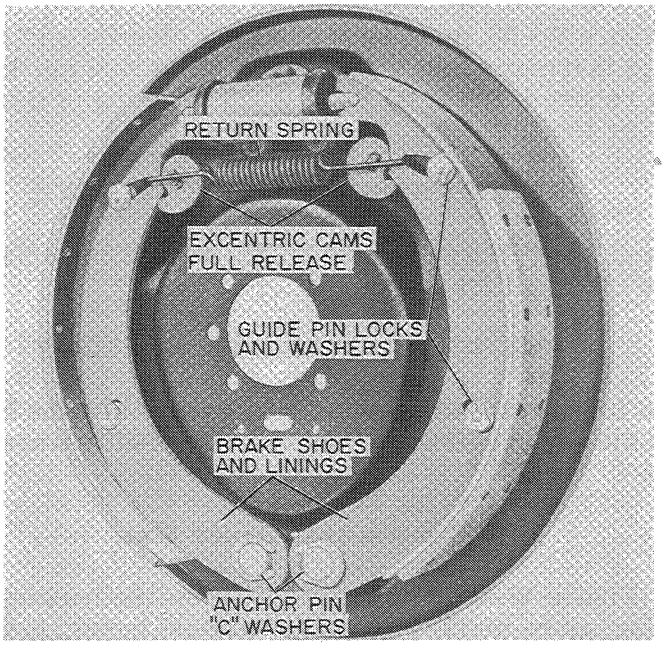

Figure W-37

3. Remove the brake shoe and lining, Figure W-37.

4. The wheel cylinder should only be removed if leakage is visible around the boots. If necessary to remove the wheel cylinder, disconnect the brake line and remove the mounting capscrews.

Inspection Of The "H" Series Brake Assembly

GENERAL

Whenever the brake is disassembled, the brake shoe, lining, excentric cams and wheel cylinders must be carefully cleaned and inspected for wear, scratches and cracks. Any parts that are worn or damaged must be replaced.

THE BRAKE SHOE

The Brake Shoes, Figure W-38, must be carefully cleaned and inspected for cracks, wear at anchor pin holes and wear at excentric cam contact areas. If the shoe is cracked or worn it must be replaced.

THE BRAKE SHOE LININGS

The Brake Shoe Linings, Figure W-38, must be carefully inspected for wear, loose rivets and grease saturation. If the brake shoe linings are excessively worn or saturated with grease or oil, the linings must be replaced. If loose rivets are found, the rivets must be replaced.

THE BRAKE DRUM

The Brake Drum, Figure W-38, must be thoroughly cleaned and inspected for cracks scoring or any other damage that may cause brake failure. If score marks or nicks are found within the drum, it can be rebored. Refer to Page W-23. Scoring of the brake drum is most often caused by worn linings or loose rivets.

RETURN SPRINGS AND LOCK RINGS

All Return Springs and Lock Rings, Figure W-38, should be replaced with new parts during assembly of a complete overhaul job.

THE WHEEL CYLINDER ASSEMBLY

It is not necessary to remove the wheel cylinders every time the brakes are removed or inspected. The only time the wheel cylinder should be removed is when leakage is visible around the cylinder.

The Wheel Cylinder Body

The Wheel Cylinder, Figure W-39, when removed from the backing plate must be thoroughly cleaned and inspected for score marks, deep grooves and burrs. If the wheel cylinder is damaged it must be replaced.

The Wheel Cylinder Piston

The Wheel Cylinder Pistons, Figure W-39, must be carefully cleaned and inspected for scratches, burrs and deep grooves that may cause leakage around the pistons. If the piston is scored or damaged it must be replaced.

The Wheel Cylinder Cups And Boots

The Wheel Cylinder Cups and Boots must always be replaced during assembly of a complete overhaul.

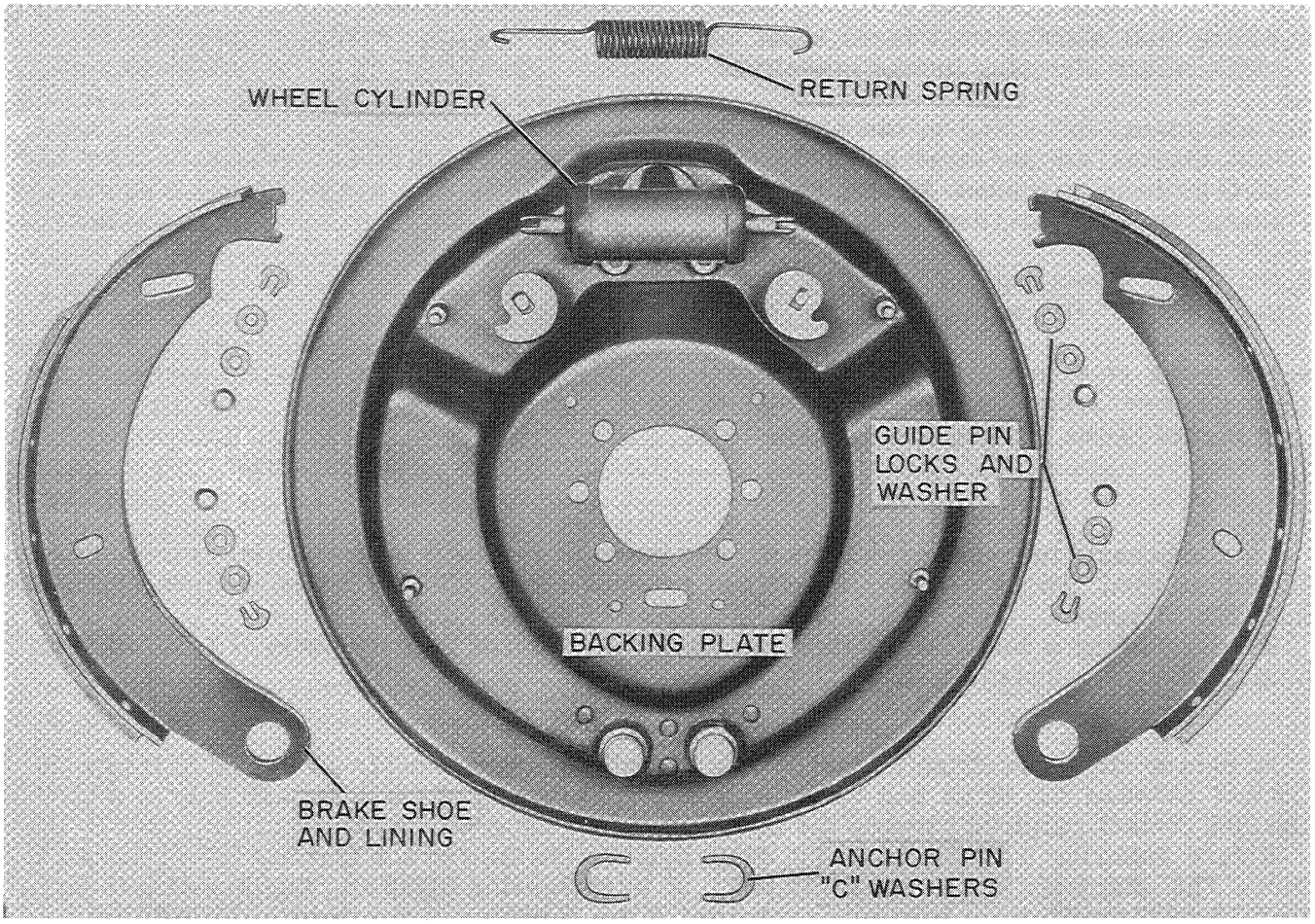

Figure W-38

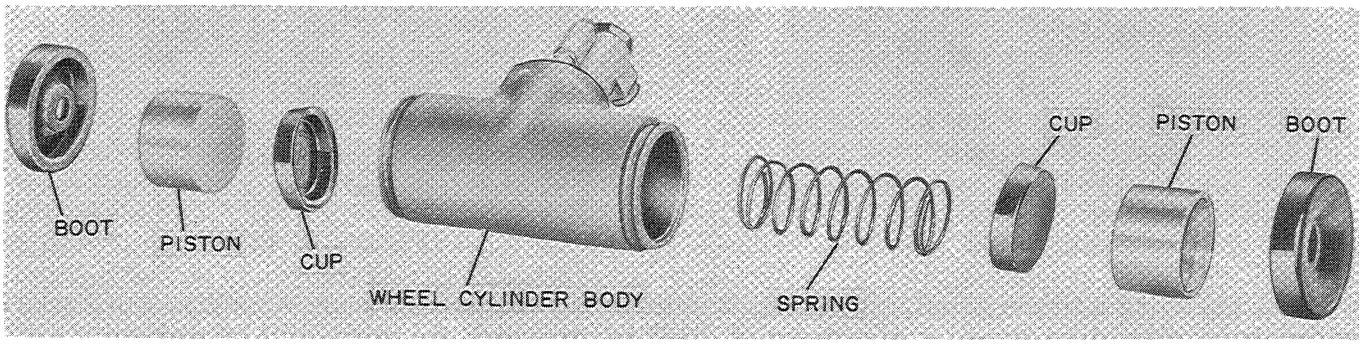

Figure W-39

INSTALLATION OF NEW BRAKE LININGS

If new linings are to be installed on the brake shoe proceed as follows:

1. Lining and shoe contact faces must be clean before clamping linings in position.

2. Then clamp the lining to the shoe with "C" clamps so the rivet holes in both pieces are in alignment. Making sure the lining is clamped firmely to the shoe.

3. Drive the rivets squarely into the holes using a 7/16" flat head drift.

4. Form the rivet heads with a 13/64 tubular rivet set following the sequence shown in Figure W-40, working from heel to toe.

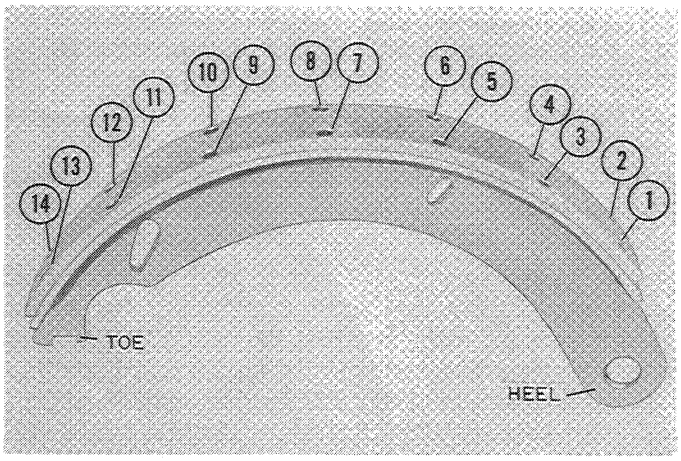

Figure W-40

To compensate for material removed when brake drums have been rebored oversized liner should be used. There are two sizes: one marked x that is 1/16" larger and one marked xx that is 1/8" larger.

When reboring a brake drum the drum should be rebored in increments of 1/16" to insure proper fit with oversize lines.

Reboring Of The Brake Drum

Whenever the brake drum is scored or grooved, the drum should be rebored to insure good contact between the drum and brake shoe lining. Reboring of the drum will help in obtaining the 80% contact required between the drum and lining for good brakes.

Before reboring a brake drum the drum must be checked to see if it has been rebored before. The diameter when new is 16.000". If in measuring the drum, the diameter is larger than 16.000" the drum has been rebored before. If the diameter of the drum is 16.080" the drum can not be rebored. it must be replaced.

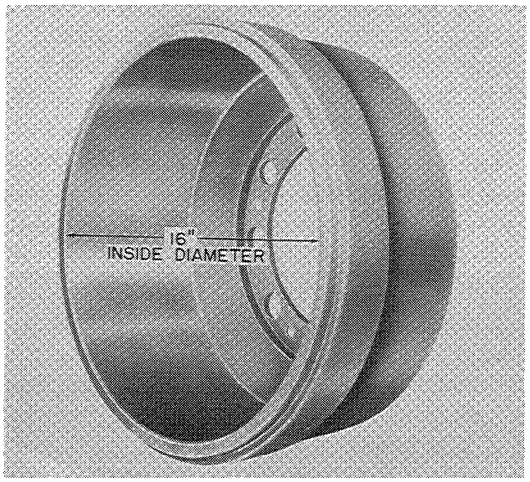

Figure W-41

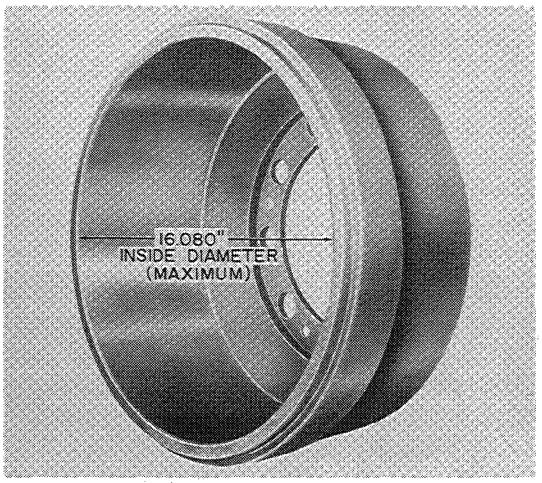

Figure W-42

When reboring a brake drum, only the minimum boring required to remove any score marks or grooves should be done. A maximum of .080" is removed, the drum will be weakened and result in poor brakes or cracking of the brake drum.

Assembly Of The "H" Series Brake

After the brake assembly has been thoroughly cleaned and inspected, the brake can be assembled. When assembling the brake all new "C" washers and guide pin locks and washers should be used.

To reassemble the "H" Series Brake proceed as follows:

1. Install the brake shoes over the guide pins and anchor pins, Figure W-43.

2. Then install new "C" washers, guide pin locks and washers, Figure W-43.

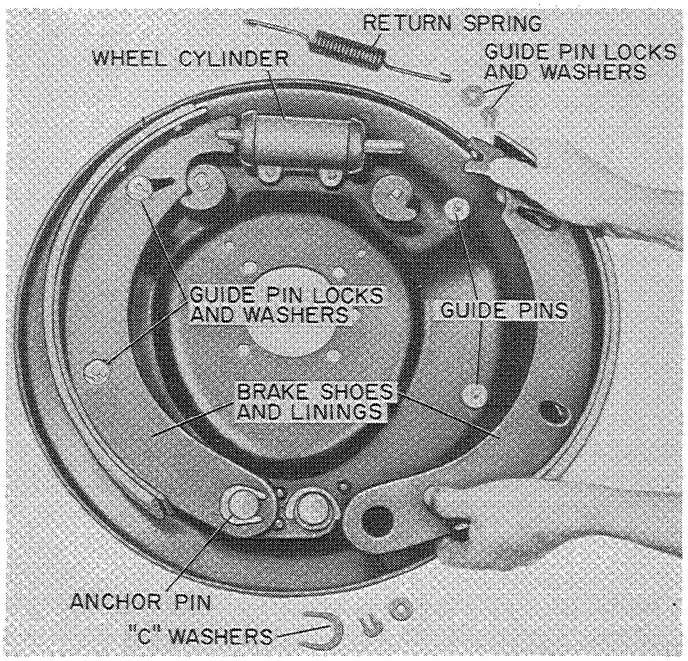

Figure W-43

3. With the eccentric cams in the full release position the return spring can be hooked into the shoes, Figure W-43.

4. Connect the hydraulic brake lines. Bleed the brake system after all brakes have been assenbled and all lines connected. Refer to Page W-18.

NOTE

AFTER A COMPLETE OVERHAUL OF THE BRAKES, REFER TO PAGE W-32 THRU W-33 FOR CORRECT ADJUSTMENT PROCEDURE.

BRAKE SHOE ADJUSTMENT (MAJOR)
STEERING AXLE "H" SERIES BRAKES

When new brake linings have been installed the following adjustments must be carefully made to properly locate the curvature of the brake shoe to the drum and to obtain the proper clearance between the brake shoes and drum.

1. With the wheel raised clear of the floor, move the excentric cam as shown in Figure W-44, to bring the brake lining into slight contact with the drum while rotating the wheel. A slight drag will be felt as the brake shoe contacts the drum.

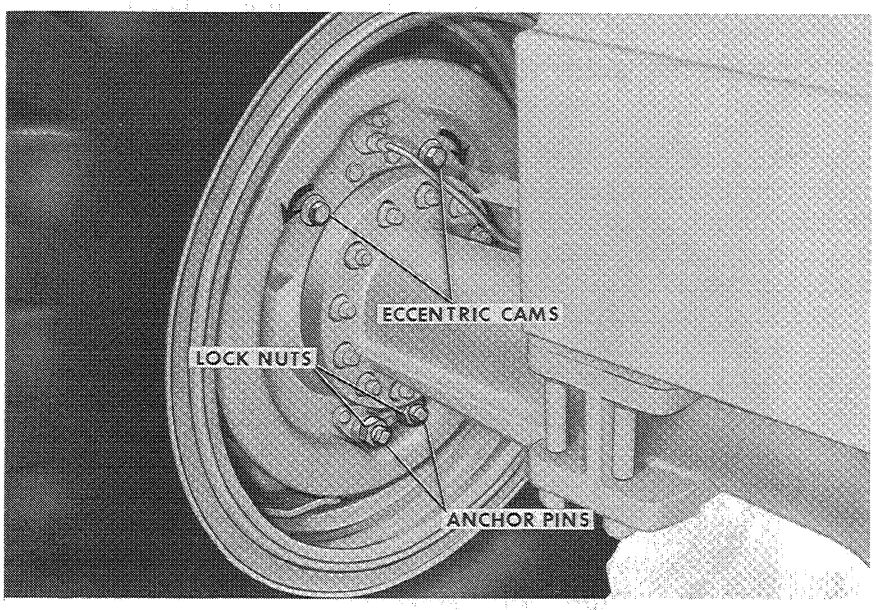

Figure W-44

2. Loosen the anchor pin locknut, Figure W-45, and rotate the anchor pin slightly in either direction to relieve the drag. Again move the excentric cam until a slight drag is felt while rotating the wheel, rotate the anchor pin the slight amount required to relieve the drag.

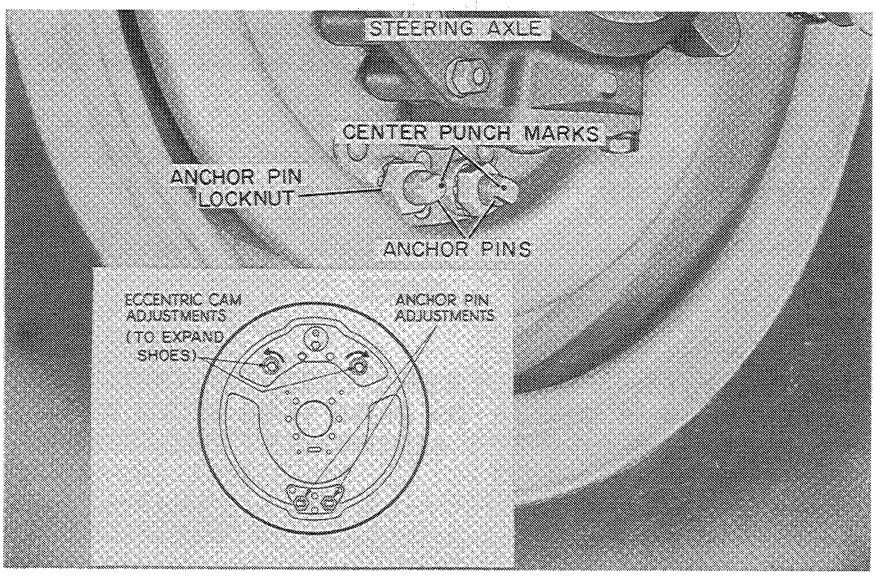

Figure W-45

Each time this procedure is repeated, the anchor pin movement will have less effect toward relieving the drag. Repeat this procedure until movement of the anchor pin will no longer relieve the drag.

3. Tighten the anchor pin locknut, make sure the anchor pin does not move from the final setting. The center punch marks on the anchor pins must be towards each other, as shown in Figure W-46. The exact position of the flat section of the anchor will vary however, depending on the drum wear, lining thickness, etc.

4. Recheck the excentric cam adjustment as described on Page W-18, (brake shoe adjustment, minor.)

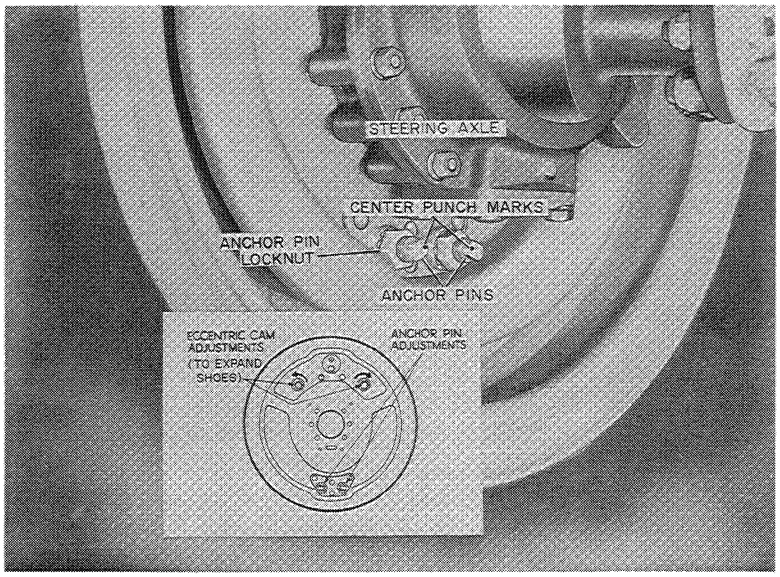

Figure W-46

5. Adjust the other brake shoe on the same wheel according to paragraphs 1, 2, 3 and 4.

REMOVAL AND DISASSEMBLY OF THE WHEEL CYLINDERS

General

It may not always be necessary to remove and disassemble the wheel cylinders. The wheel cylinders should only be removed if leakage is visible around the wheel cylinder boots.

Removal Procedure

1. Remove the brake line from the wheel cylinder, Figure W-47.

2. Then remove the two mounting capscrews, Figure W-47.

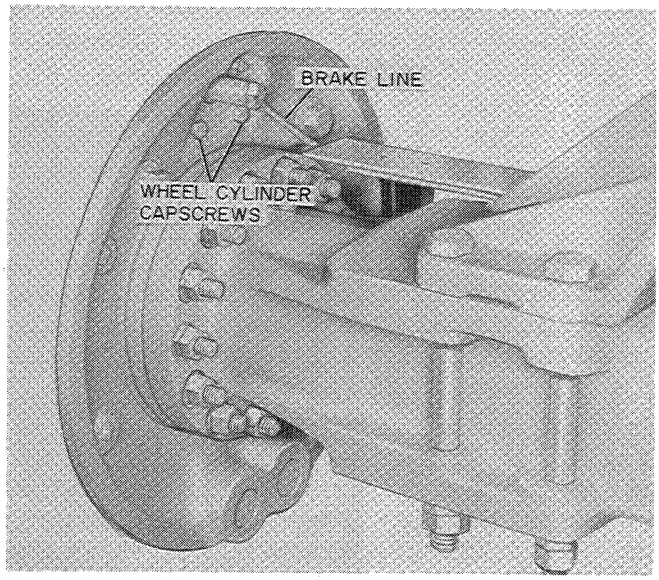

Figure W-47

DISASSEMBLY PROCEDURE

1. Remove the boots from both ends of the wheel cylinder, Figure W-48.

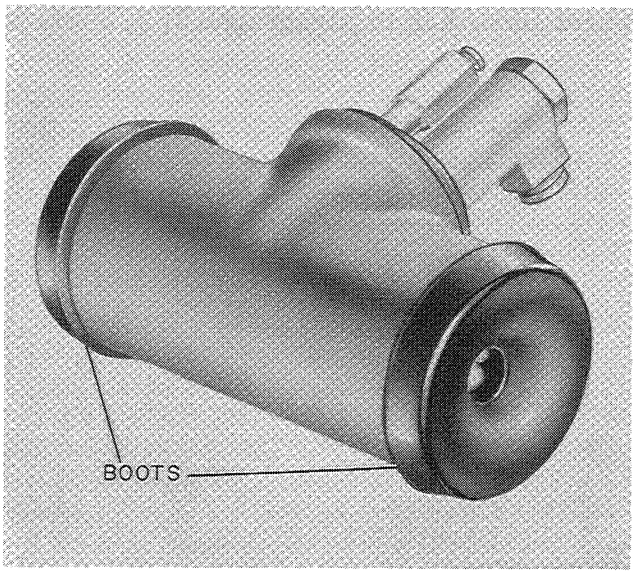

Figure W-48

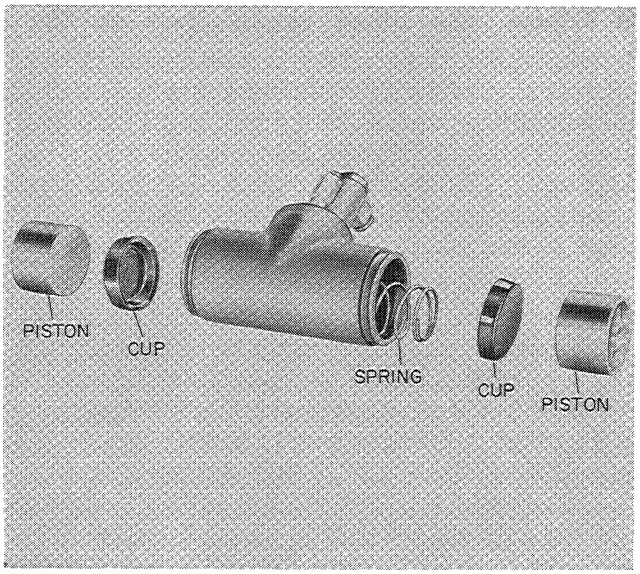

Figure W-49

2. Then remove the pistons, cups and springs, Figure W-49.

ASSEMBLY AND INSTALLATION OF THE WHEEL CYLINDERS

After the wheel cylinder parts have been cleaned and inspected the wheel cylinder can be assembled. Before assembling the wheel cylinder parts, coat all reusable and new parts with a light coat of brake fluid.

Assembly Procedure

1. Install the spring, cups and pistons into the wheel cylinder, Figure W-50.

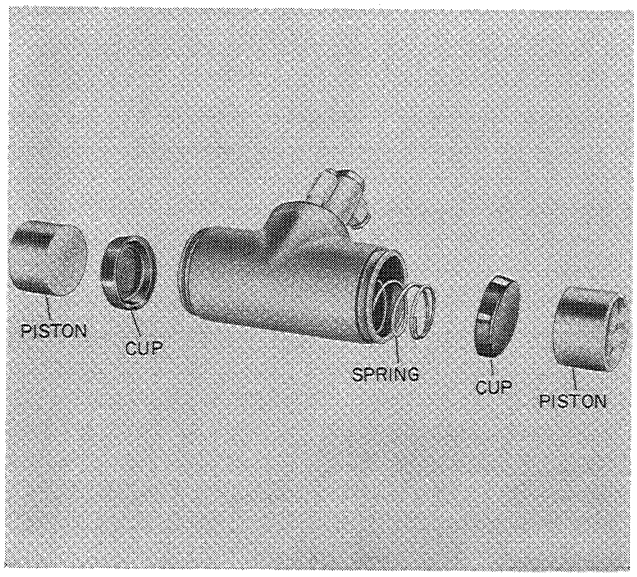

Figure W-50

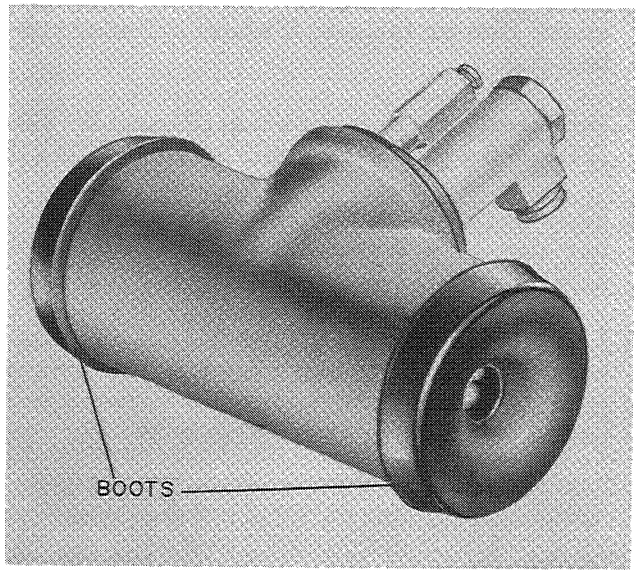

Figure W-51

2. Now install the wheel cylinder boots, Figure W-51.

INSTALLATION PROCEDURE

With the wheel cylinder assembled it can then be reinstalled onto the backing plate as shown in Figure W-52.

1. Holding the wheel cylinder in place on the backing plate, install the two mounting capscrews, Figure W-52.

2. Then connect the power brake line to the wheel cylinder, Figure W-52.

   NOTE: Refer to Page W-18 for correct bleeding procedure.

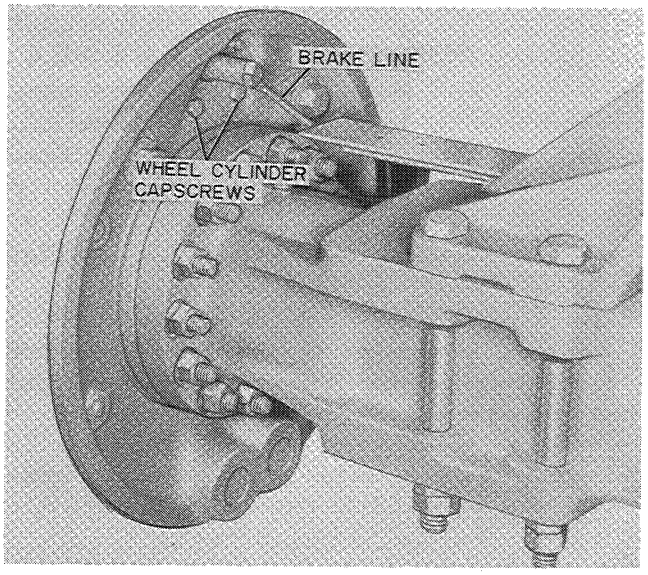

Figure W 52

SERVICE SUGGESTIONS

No Brakes, Brake Pedal Fades To Floor

CAUSE	REMEDY
1. Insufficient Brake Fluid in master cylinder.	1. Refill reservoir with a grade 70R1 hydraulic brake fluid. Bleed brake system of air.
2. Loss of brake fluid due to broken hydraulic brake line or failure of wheel cylinder rubber cup.	2. Replace defective parts.
3. Ruptured high pressure cup (Figure W-53) - (17) or low pressure cup (Figure W-53) - (18)	3. Install master cylinder repair kit as outlined in disassembly and assembly section.
4. Loss of pressure in the low pressure chamber due to a defective relief valve check disc (Figure W-53) - (8)	4. Refer to remedy #3.
5. Loss of pressure in the low pressure chamber due to a broken relief valve spring (Figure W-53) - (5) or relief valve piston held open due to dirt (Figure W-53) - (5)	5. Clean or replace relief valve as required.

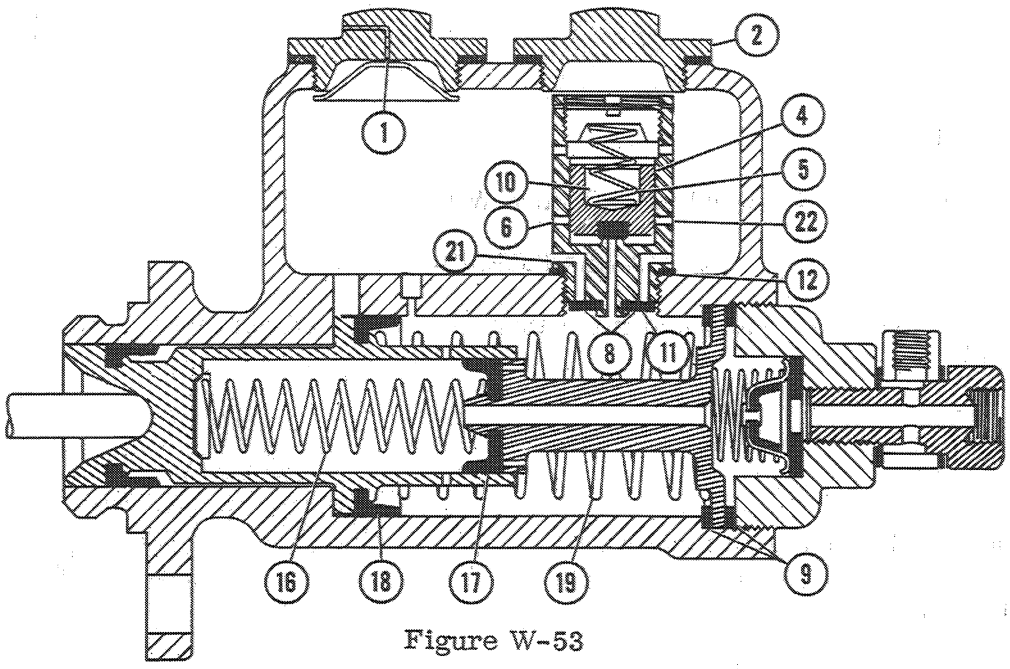

Figure W-53

6. Loss of pressure in the high pressure chamber due to defective high pressure piston gaskets (Figure W-53) - (9)	6. Refer to remedy #3.
7. Defective check valve spring, disc or gasket (Figure W-53) - (10) (11) (12)	7. Refer to remedy #3.
8. Brake shoes out of adjustment.	8. Adjust brake shoes, See Page W-18 and W-18.

Slow Brake Pedal Return

CAUSE	REMEDY
1. Fluid return ports in the relief valve (Figure W-53) - (6) may have become plugged due to dirt or foreign matter.	1. Remove relief valve, wash in alcohol and clean return ports.
2. Poor quality brake fluid which may have caused swelling of the master cylinder rubber cups and gaskets.	2. The entire brake system must be drained, brake lines, master cylinder and wheel cylinders cleaned with alcohol. All rubber cups and gaskets must be replaced.
3. Broken high pressure piston return spring (Figure W-53) - (16) or low pressure piston return spring (Figure W-53) - (19).	3. Install master cylinder kit containing springs, rubber cups and gaskets.
4. Reservoir ports (Figure W-53) - (21) (22) may be plugged with foreign matter.	4. Clean master cylinder and parts in alcohol.
5. Air vents in reservoir caps (Figure W-53) - (1) (2) plugged by dirt or foreign matter.	5. Clean reservoir caps in alcohol.
6. Broken brake pedal return spring.	6. Replace return spring.
7. Brake pedal tight on pivot shaft due to lack of lubrication.	7. Lubricate pivot shaft until brake pedal moves freely.

Spongy Brake Pedal

CAUSE	REMEDY
1. Air trapped in brake system.	1. Bleed brake system. See Section U.
2. High pressure leaks external.	2. Check all connections tighten if required.
3. Incorrect brake shoe anchor adjustment.	3. Adjust brake shoes. See Section U.
4. Cracked brake drum.	4. Replace brake drum. See Section U.

Brakes Pulling To Right Or Left

Poor Brakes, Squeeling Brakes

CAUSE	REMEDY
1. Brake Shoes soaked in hydraulic brake fluid caused by leaking wheel cylinder.	1. Replace brake shoes replace wheel cylinder cups. See Section U.
2. Brake shoes glazed, due to overheating.	2. Circle grind brake shoes. See Section U.
3. Brake shoe lining badly worn. Rivets contacting drum.	3. Reline brake shoes. See Section U.

Brake Drag Or Pressure Build Up When The Brake Pedal Is Released

CAUSE	REMEDY
1. Insufficient brake free pedal.	1. Adjust the master cylinder push rod until the brake pedal moves 3/4" to 1" before brake pressure begins - See brake pressure tests, Page W-8.
2. Inferior brake fluid causing the master cylinder rubber cups to swell and stick.	2. Clean and rebuild the master cylinder and all wheel cylinders. Refill the brake system with recommended brake fluid.
3. Slow return or the low pressure piston caused by the entrance of dirt past a defective rubber boot.	3. Inspect and clean all parts. Rebuild the master cylinder. Install a new master cylinder boot.

SECTION

W

Supplement No. 1

SERVICING THE TRANSMISSION CUT-OUT CONTROL VALVE ON CASE 4 WHEEL DRIVE UNIT LOADERS

TABLE OF CONTENTS

TRANSMISSION CUT-OUT CONTROL VALVE

(How It Works) W-43

FLOW DIAGRAM

(Left Brake Pedal Depressed) . . . . . W-44 and W-45

FLOW DIAGRAM

(Right Brake Pedal Depressed) . . . . . W-46 and W-47

REMOVAL AND DISASSEMBLY . . . . . W-48 and W-49

INSPECTION . . . . . W-48 and W-49

ASSEMBLY . . . . . W-50 and W-51

HOW IT WORKS
(Refer to Figure W-54)

The operation of the clutch cut-out control valve is simple in operation.

Depressing the Left Brake Pedal -
Applies the brakes and disengages the transmission direction clutches.

This transmission cut-out feature is provided to prevent overheating the transmission and converter fluid when the brakes must remain applied for prolonged periods of time.

Depressing the Right Brake Pedal -
Applies the brakes only.

When the right brake pedal is applied, engine power is still directed through the converter and transmission.

CAUTION Use of the right brake pedal for prolonged periods of time will increase the converter temperature. Do not exceed the limits on the converter temperature gauge.

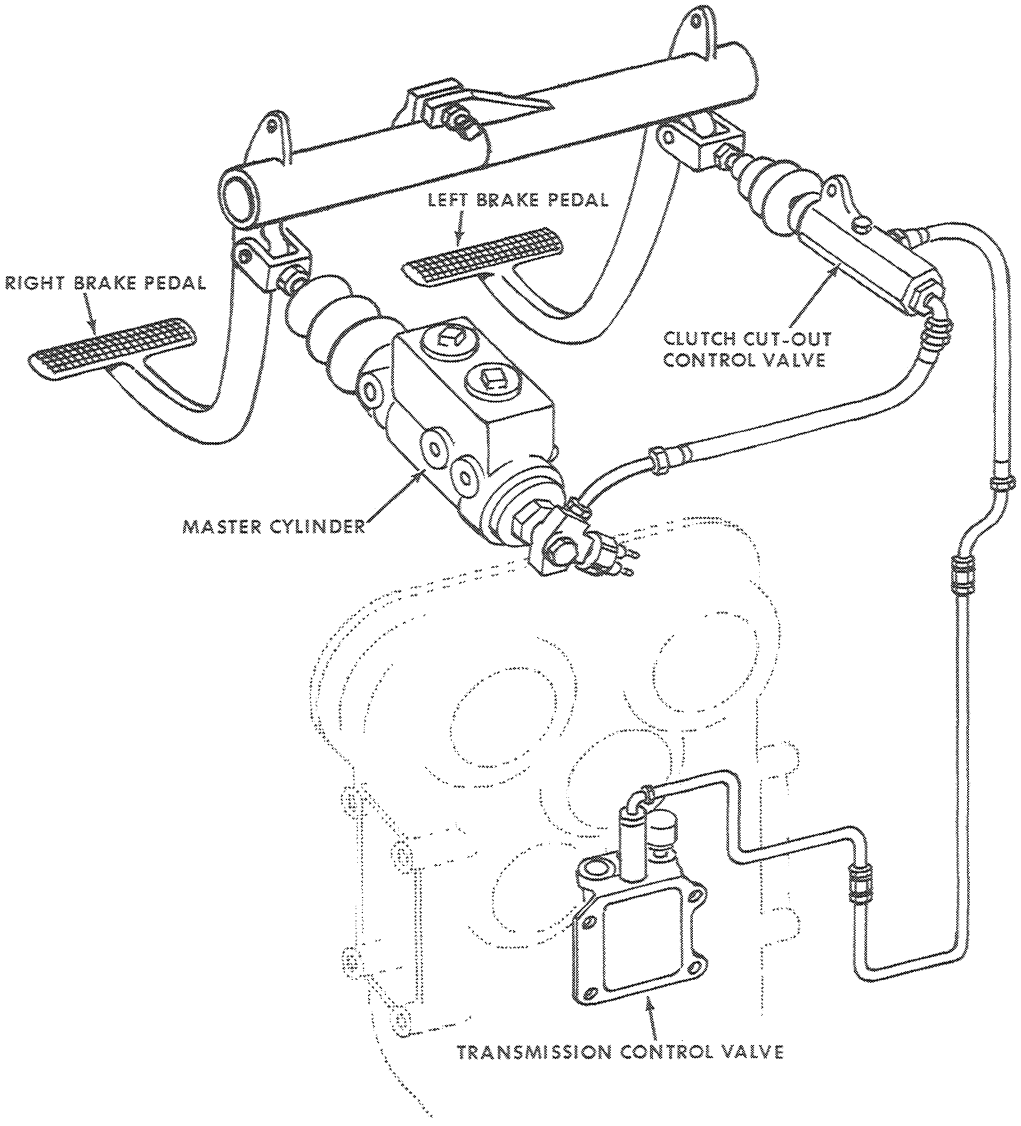

Figure W-54

FLOW DIAGRAM
(Refer to Figure W-55)

When the left hand brake pedal is depressed, the boss on the left brake pedal contacts the boss on the right brake pedal depressing both brake pedals simultaneously.

The master cylinder push rod actuates the master cylinder pressurizing the line to the wheel cylinders as well as to the clutch cut-out control valve.

The clutch cut-out control valve push rod moves forward off its seat allowing pressurized brake fluid to flow to the transmission control valve.

The pressurized brake fluid enters the transmission control valve at the clutch cut-off port moving the cup, pin and valve downward closing the passage to the directional spool.

NOTE

With the flow of fluid blocked off from the direction clutch, pressurized oil from the clutch is released and returned to the transmission sump thru a passage between the control valve and transmission housing (indicated by arrows).

When the brakes are released, the master cylinder push rod moves rearward, releasing the pressure in the line from the master cylinder to the clutch cut-out control valve.

The clutch cut-out control valve push rod also moves rearward allowing the valve to seat in the body, closing the passage to the transmission control valve.

The transmission control valve is moved upward by the return spring, uncovering the port to the directional clutch allowing the pressurized transmission oil to flow to the clutch.

FLOW DIAGRAM

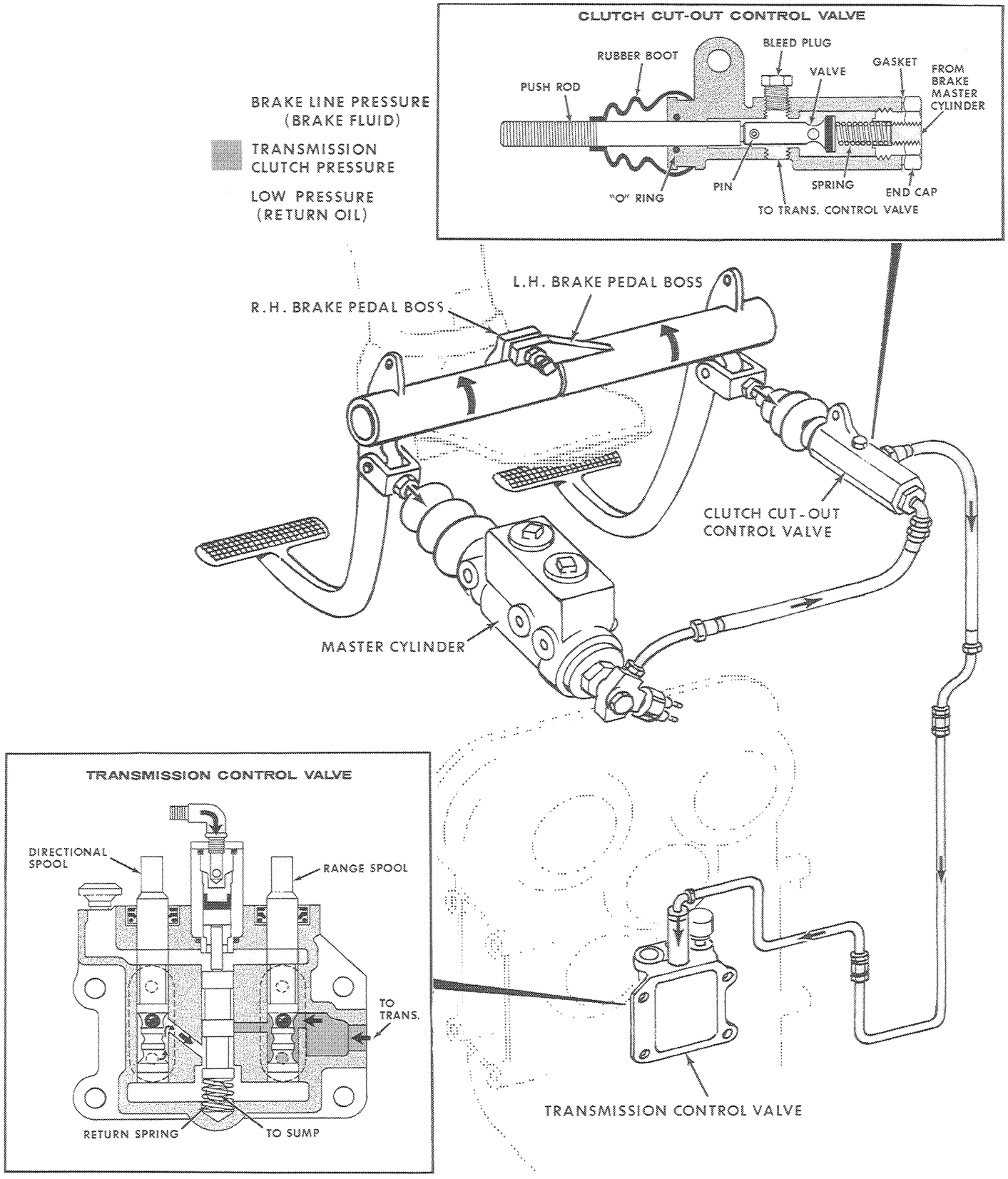

Figure W-55

FLOW DIAGRAM
(Refer to Figure W-56)

When the right hand brake pedal is depressed, the master cylinder push rod actuates the master cylinder pressurizing the line to the wheel cylinders as well as to the clutch cut-out control valve.

Since the brake pedals work independently, the clutch cut-out control valve push rod is still seated because the left brake pedal was not actuated.

In this way when the right brake pedal is depressed, it applies the brakes only and engine power is still directed through the converter.

FLOW DIAGRAM

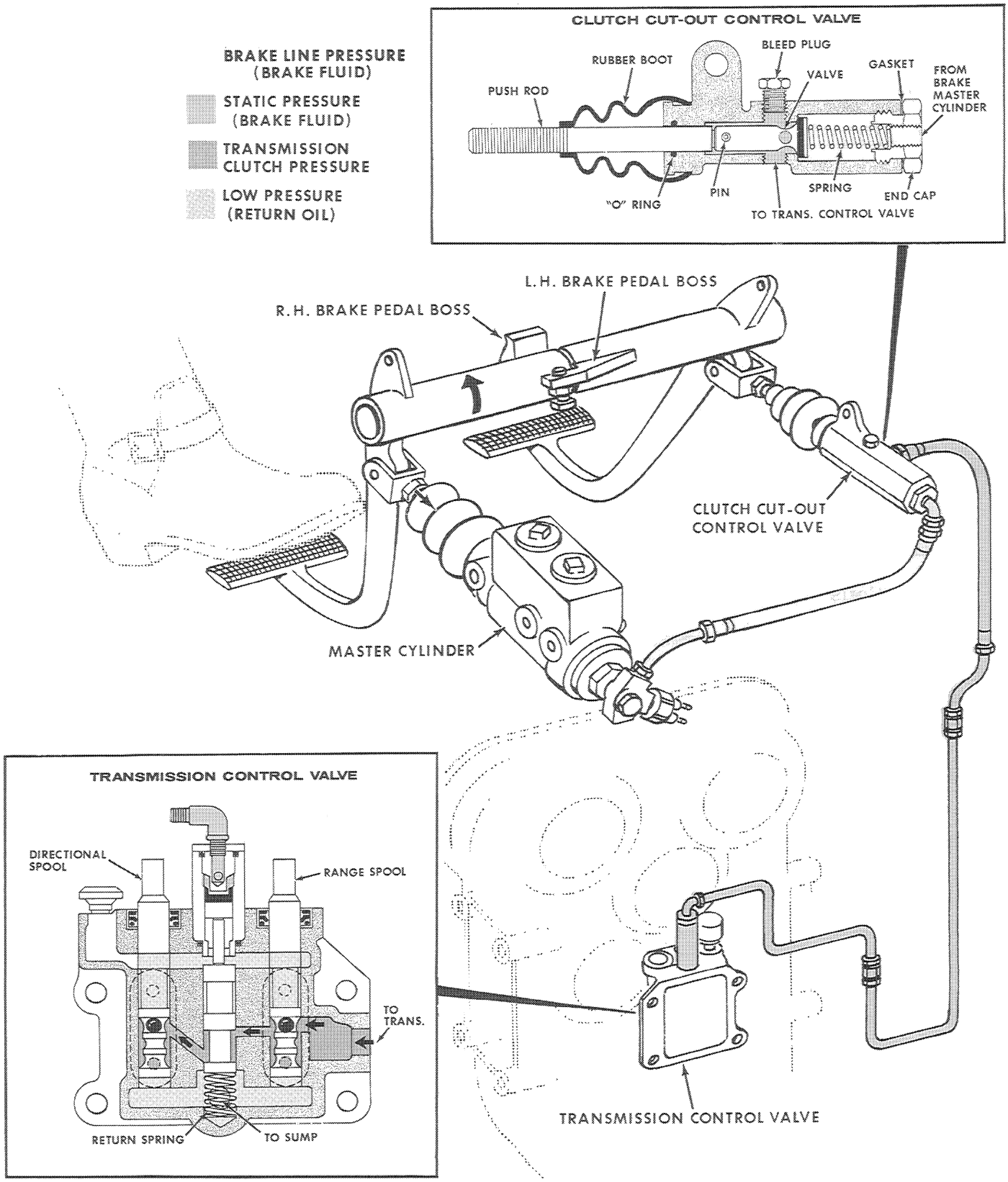

Figure W-56

REMOVAL AND DISASSEMBLY
(Refer to Figure W-57)

A. Disconnect the two hoses (one to the brake master cylinder and one to the transmission control valve) at the clutch control valve. Remove the mounting pin that holds the valve to the mounting plate.

CAUTION Cap hose lines immediately to prevent dirt from entering the system.

B. Remove the end cap, spring and push rod.

INSPECTION
(Refer to Figure W-58)

Inspect for a broken or weak valve spring

Valve Spring Specifications

Free Length	1.750 Inches
Wire Diameter	.040 Inch
Outside Diameter	.50 Inch
Active Coils	8
Total Coils	10
Spring Pressure at Compressed Height of 1 Inch	4.6 Pounds

Replace the push rod "O" ring located in the end of the housing.

Replace the valve complete with rubber seal (not serviced separately).

Replace the rubber boot over the push rod and valve housing.

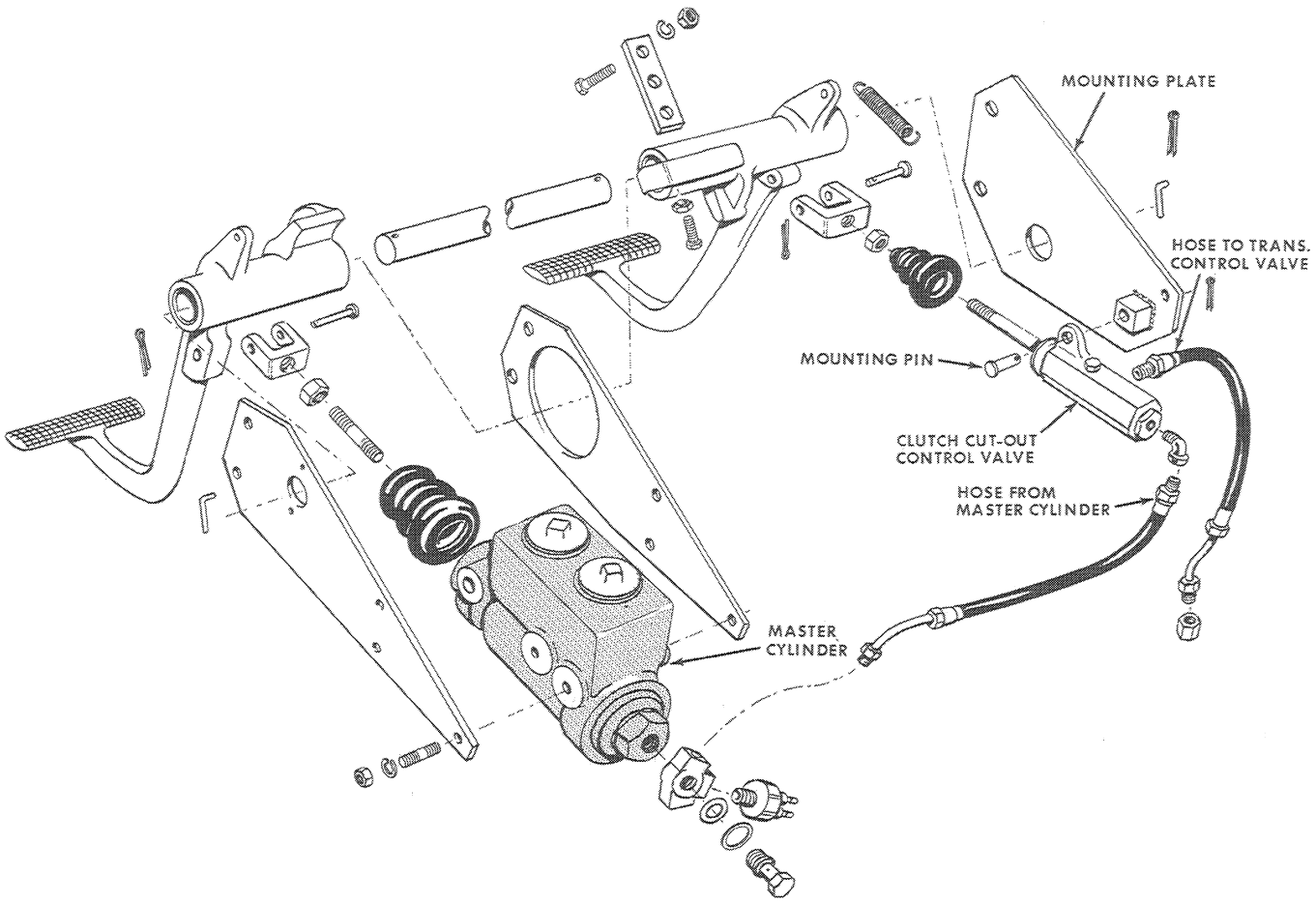

Figure W-57

INSPECTION

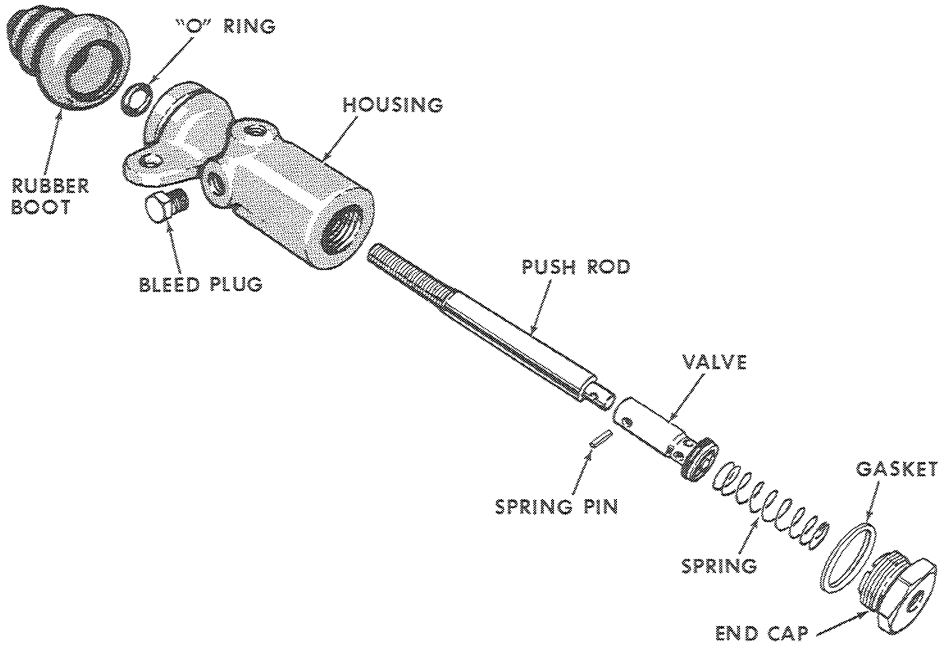

Figure W-58

ASSEMBLY
(Refer to Figures W-59 and W-60)

A. Assemble the valve to the push rod by inserting the spring pin through pin holes.

B. Install the small "O" ring in the boot end of the housing.

C. Lubricate the push rod with brake fluid (DO NOT USE OIL) and carefully insert the push rod into the housing from the end cap end of the housing.

D. Install the valve spring, gasket and end cap.

E. Install the mounting pin that holds the control valve to the mounting plate and insert cotter pin.

F. Connect the hoses from the master brake cylinder and the transmission control valve.

G. Bleed the system by loosening the bleed plug and depressing the left brake pedal a few times. Before releasing brake pedal, tighten the bleed plug so air is not sucked into the system. When bubbles cease to appear at the bleed plug, tighten plug. Try brakes a few times. If the brake pedals are spongy or fade proceed to bleed the brakes as described in Section W.

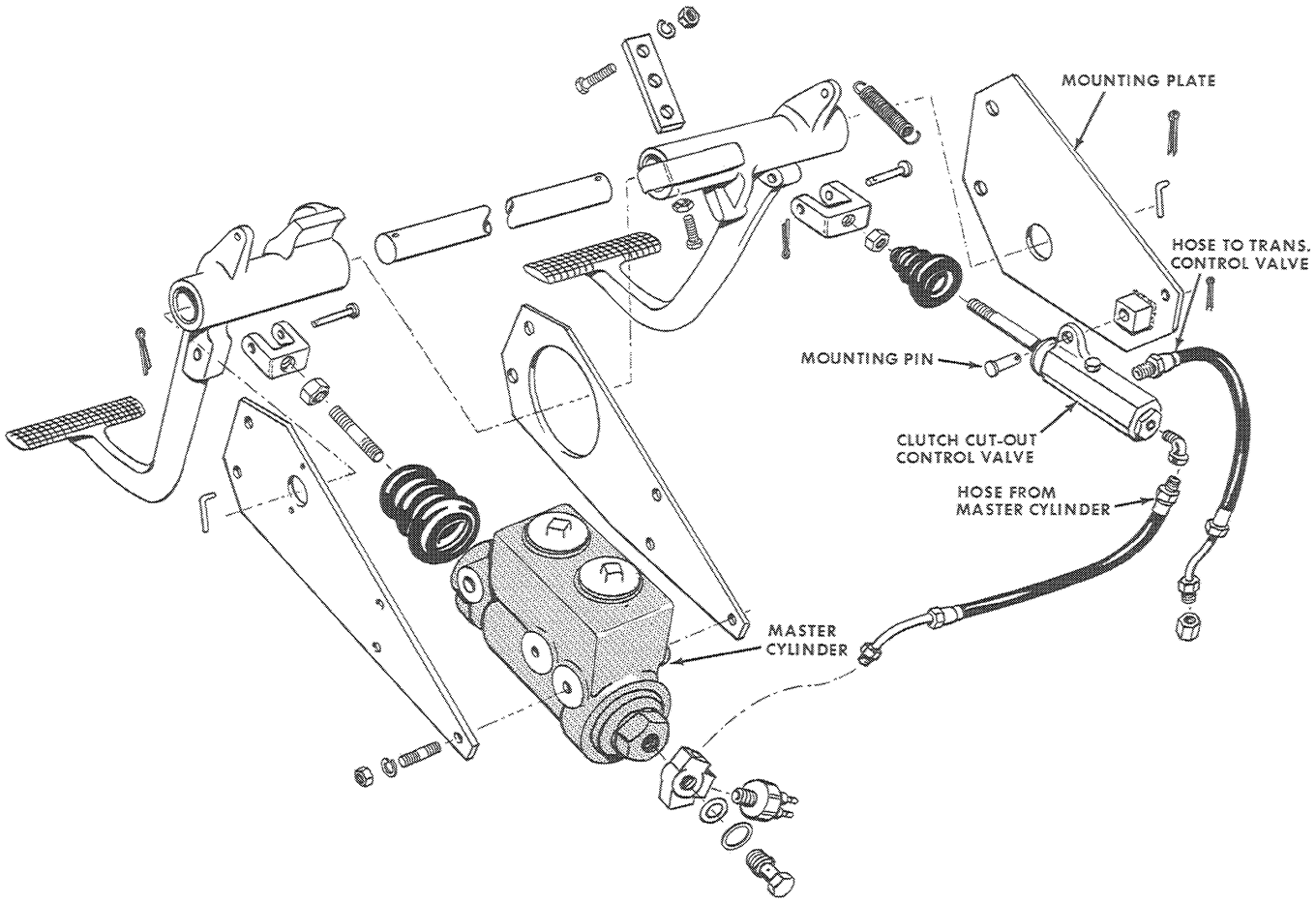

Figure W-59

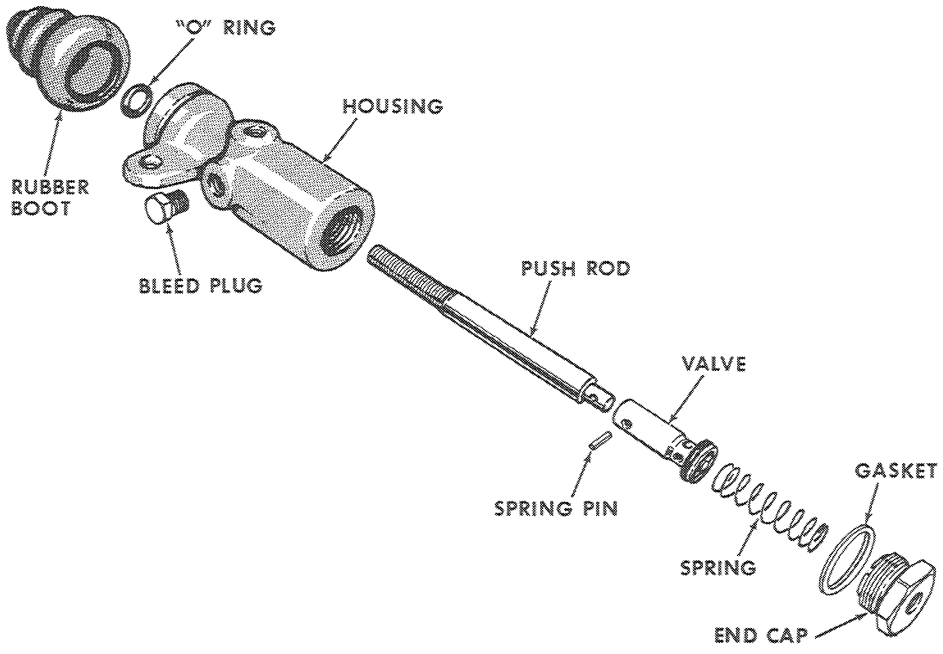

Figure W-60

SECTION

W

Supplement No. 2

SERVICING THE

TRANSMISSION CUT-OUT CONTROL VALVE

(LEVER OPERATED)

ON

CASE 4 WHEEL DRIVE

UNIT LOADERS

TABLE OF CONTENTS

TRANSMISSION CUT-OUT CONTROL VALVE

(How It Works) W-55

FLOW DIAGRAM

(Left Brake Pedal Depressed) . . . . . W-56 and W-57

FLOW DIAGRAM

(Right Brake Pedal Depressed) . . . . . W-58 and W-59

REMOVAL AND DISASSEMBLY . . . . . W-60 and W-61

INSPECTION . . . . . W-60 and W-61

ASSEMBLY . . . . . W-62 and W-63

HOW IT WORKS
(Refer to Figure W-61)

The operation of the clutch cut-out control valve is simple in operation.

Depressing the Left Brake Pedal -
Applies the brakes and disengages the transmission direction clutches.

This transmission cut-out feature is provided to prevent overheating the transmission and converter fluid when the brakes must remain applied for prolonged periods of time.

Depressing the Right Brake Pedal -
Applies the brakes only.

When the right brake pedal is applied, engine power is still directed through the converter and transmission.

CAUTION Use of the right brake pedal for prolonged periods of time will increase the converter temperature. Do not exceed the limits on the converter temperature gauge.

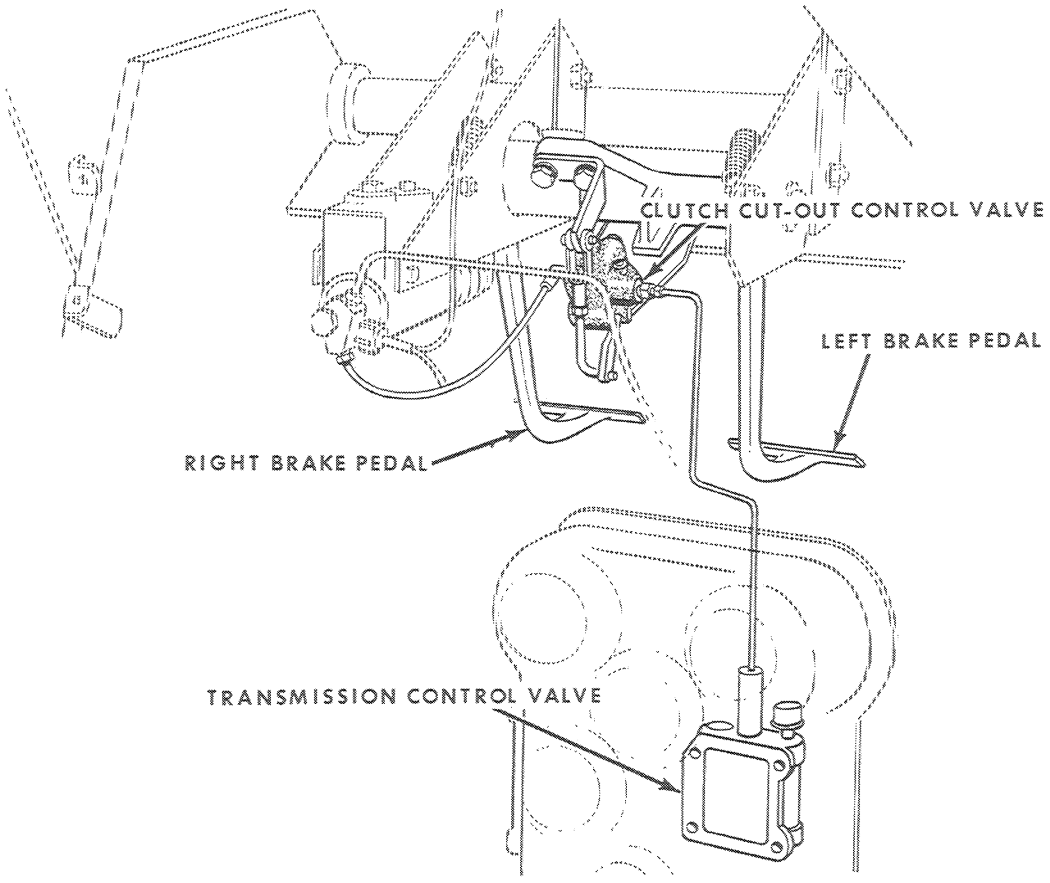

Figure W-61

FLOW DIAGRAM
(Refer to Figure W-62)

When the left hand brake pedal is depressed, the boss on the left brake pedal contacts the boss on the right brake pedal depressing both brake pedals simultaneously.

The master cylinder push rod actuates the master cylinder pressurizing the line to the wheel cylinders as well as to the clutch cut-out control valve.

The brake pedal bracket arm connected to the clutch cut-out control valve rod and handle moves the cam and cam follower - moving the check valve poppet off its seat allowing pressurized brake fluid to flow to the transmission control valve.

The pressurized brake fluid enters the transmission control valve at the clutch cut-off port moving the cup, pin and valve downward closing the passage to the directional spool.

NOTE

With the flow of fluid blocked off from the direction clutch, pressurized oil from the clutch is released and returned to the transmission sump thru a passage between the control valve and transmission housing (indicated by arrows).

When the brakes are released, the master cylinder push rod moves rearward, releasing the pressure in the line from the master cylinder to the clutch cut-out control valve.

The brake pedal bracket arm connected to the clutch cut-out control valve rod and handle moves the cam and cam follower - allowing the check valve poppet to seat in the body, closing the passage to the transmission control valve.

The transmission control valve cup, pin and valve is moved upward by the return spring, uncovering the port to the directional clutch allowing the pressurized transmission oil to flow to the clutch.

FLOW DIAGRAM

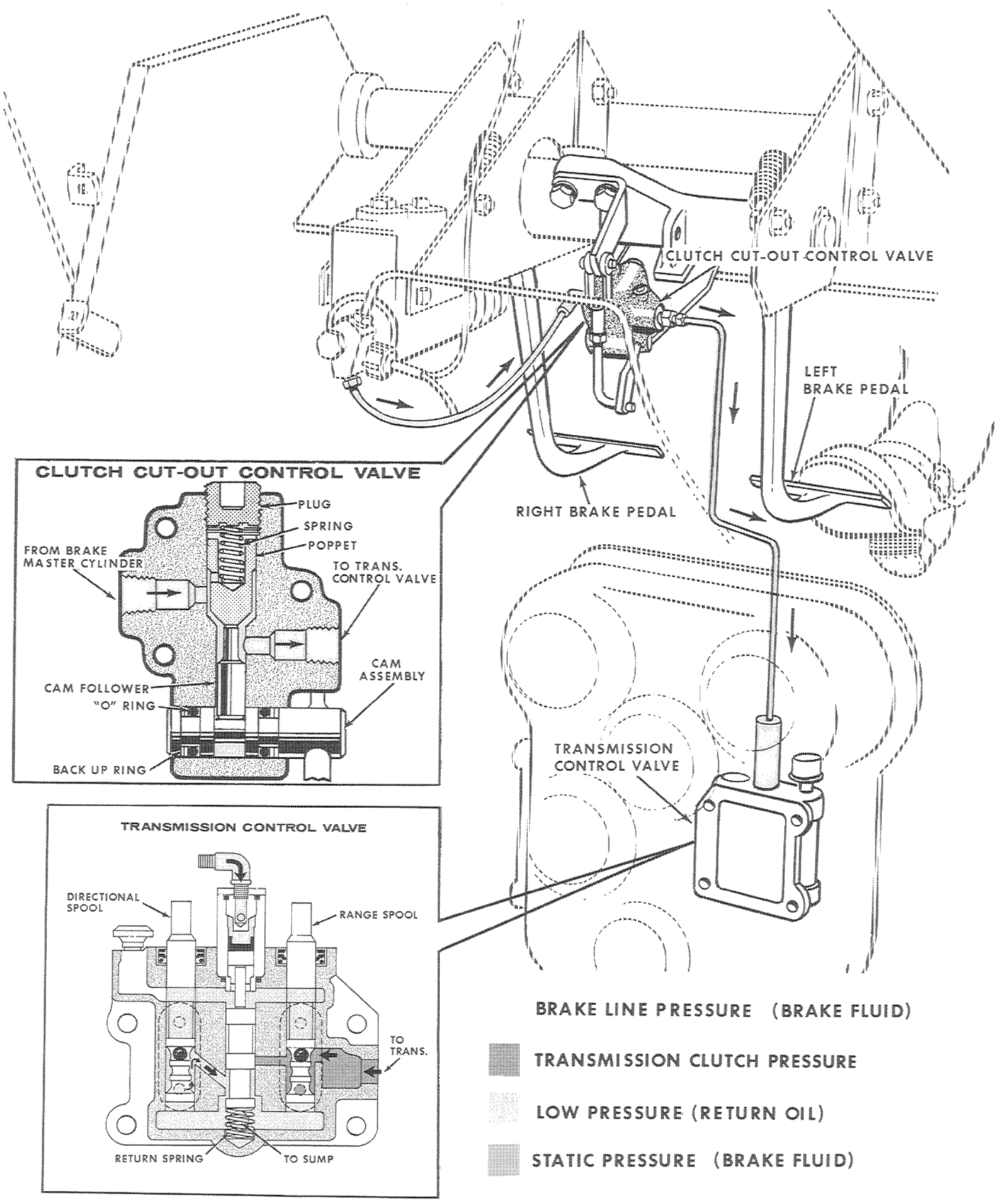

Figure W-62

FLOW DIAGRAM
(Refer to Figure W-63)

When the right hand brake pedal is depressed, the master cylinder push rod actuates the master cylinder pressurizing the line to the wheel cylinders as well as to the clutch cut-out control valve.

Since the brake pedals work independently, the clutch cut-out control valve rod does not move because the left brake pedal was not actuated.

In this manner when the right brake pedal is depressed, it applies the brakes only and engine power is still directed through the converter.

FLOW DIAGRAM

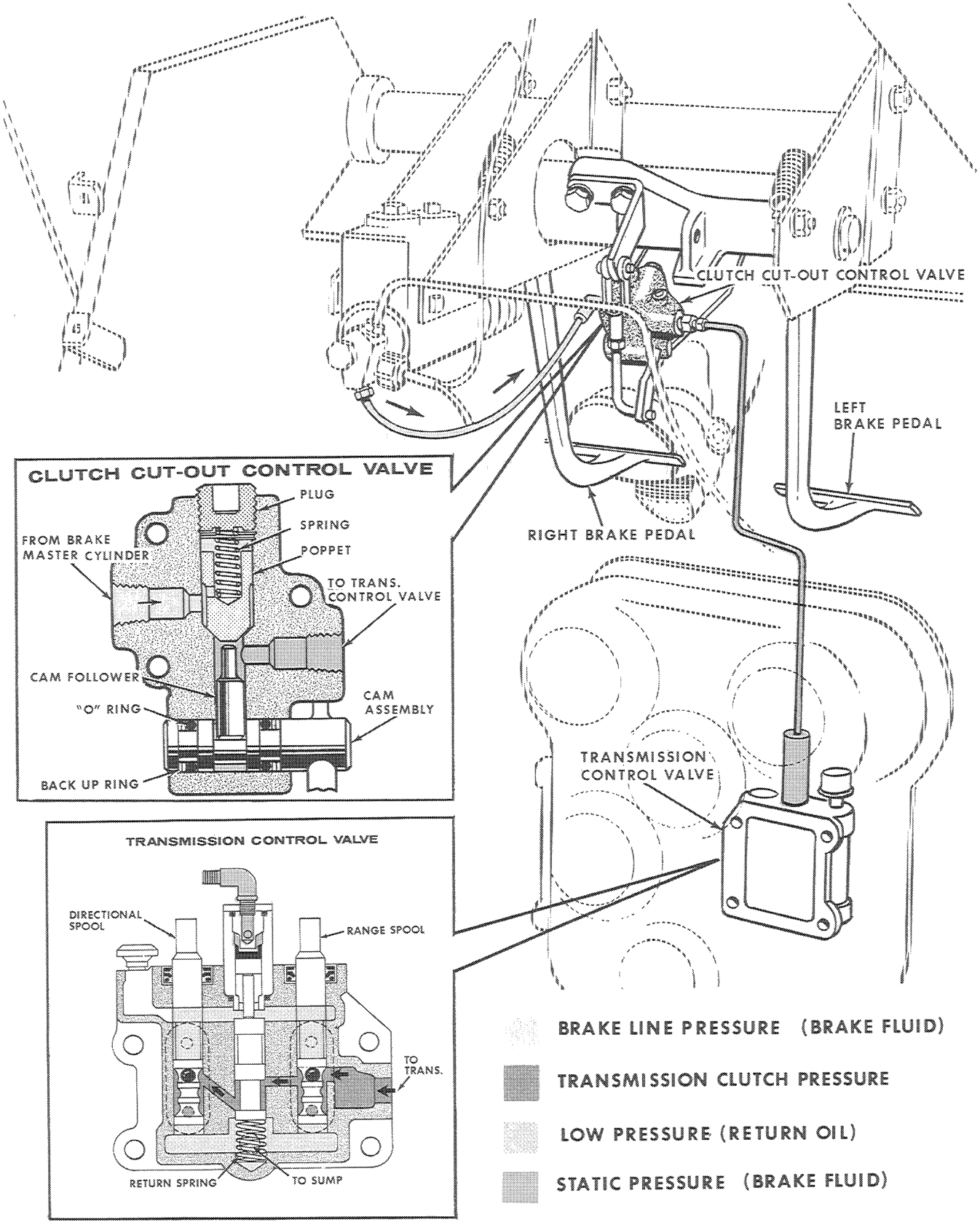

Figure W-63

REMOVAL AND DISASSEMBLY
(Refer to Figure W-64)

A. Disconnect the two lines (one to the brake master cylinder and one to the transmission control valve) at the clutch cut-out control valve. Remove the mounting bolts that hold the valve to the mounting bracket.

CAUTION Cap lines immediately to prevent dirt from entering the system.

B. Disconnect the valve rod and remove the clutch control valve from the mounting bracket.

C. Remove the check valve plug, spring, poppet and cam follower.

D. Remove the handle and cam assembly from the valve body.

INSPECTION
(Refer to Figure W-65)

Inspect for a broken or weak valve spring.

Valve Spring Specifications

Free Length	1.875 Inches
Wire Diameter	.027 Inch
Outside Diameter	.312 Inch
Total Coils	18

Replace the cam "O" rings and back-up washers whenever the valve is serviced.

Carefully clean and inspect the cam, cam follower, poppet and housing for nicks, burrs and score marks. Replace any damaged parts.

REMOVAL AND DISASSEMBLY

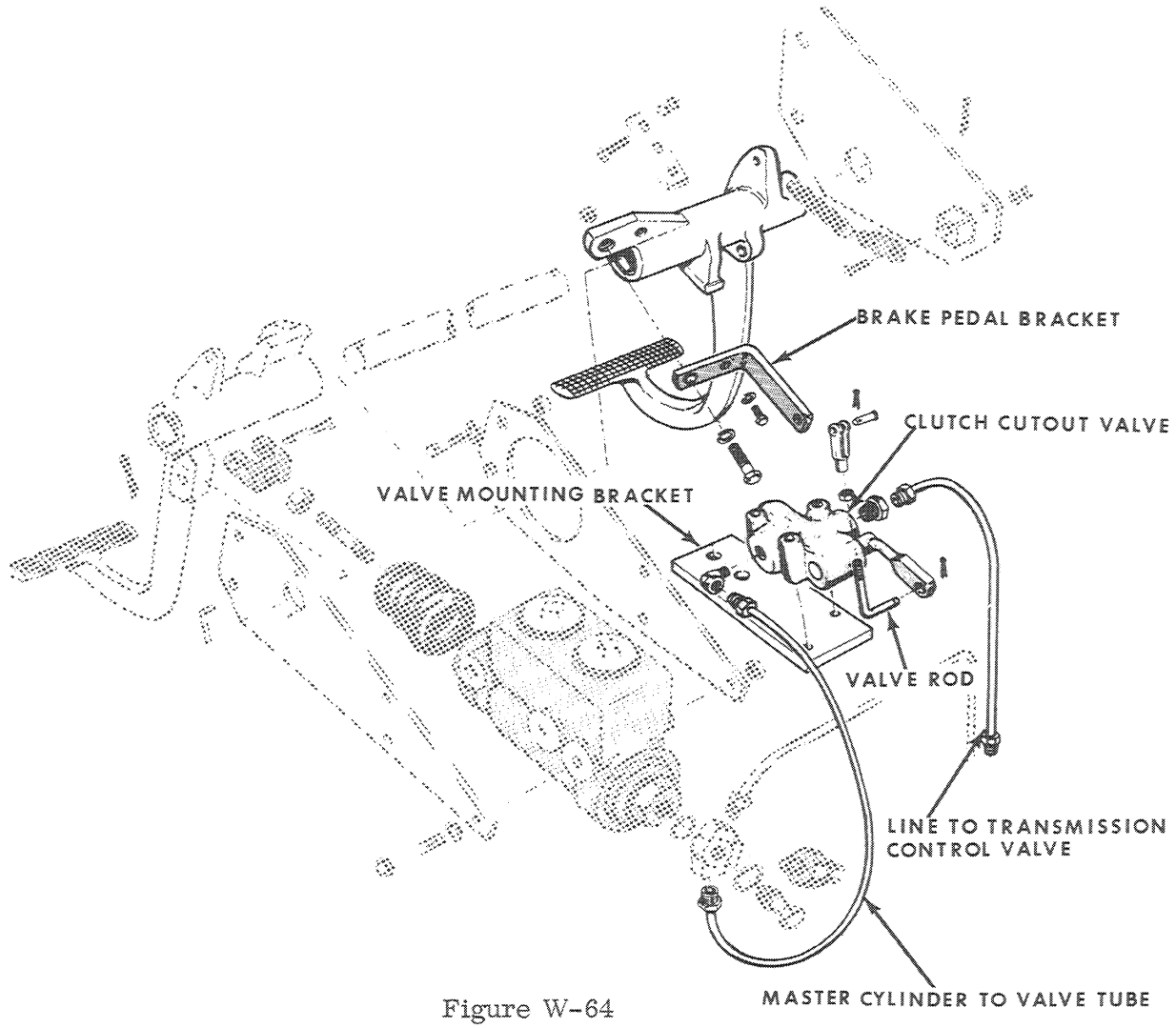

Figure W-64

INSPECTION

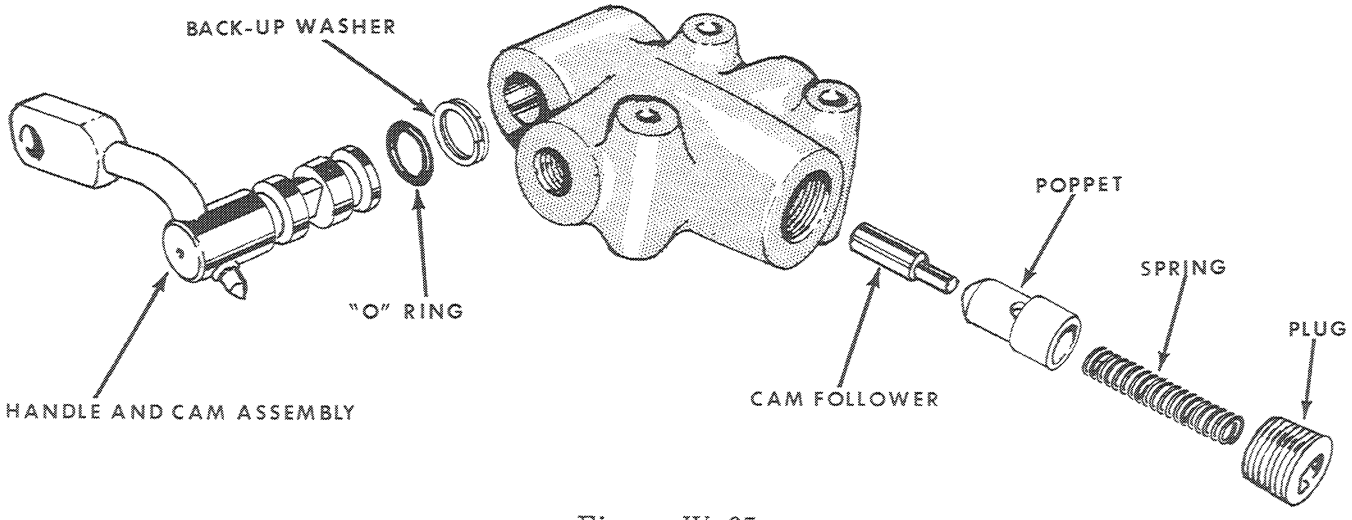

Figure W-65

ASSEMBLY AND INSTALLATION
(Refer to Figures W-66 and W-67)

A. Assemble the handle and cam assembly with "O" rings and back up washers in the valve body.

B. Install the cam follower, poppet, spring and plug.

C. Install the clutch cut-out valve assembly on the mounting bracket and connect the valve rod and two lines.

D. Bleed the system by loosening the line to the transmission control valve and depressing the left brake pedal a few times. Before releasing brake pedal, tighten the line to the transmission control valve so air is not drawn into the system. When bubbles cease to appear at the transmission control valve, tighten the line. Try brakes a few times. If the brake pedals are spongy or fade proceed to bleed the brakes as described in Section W.

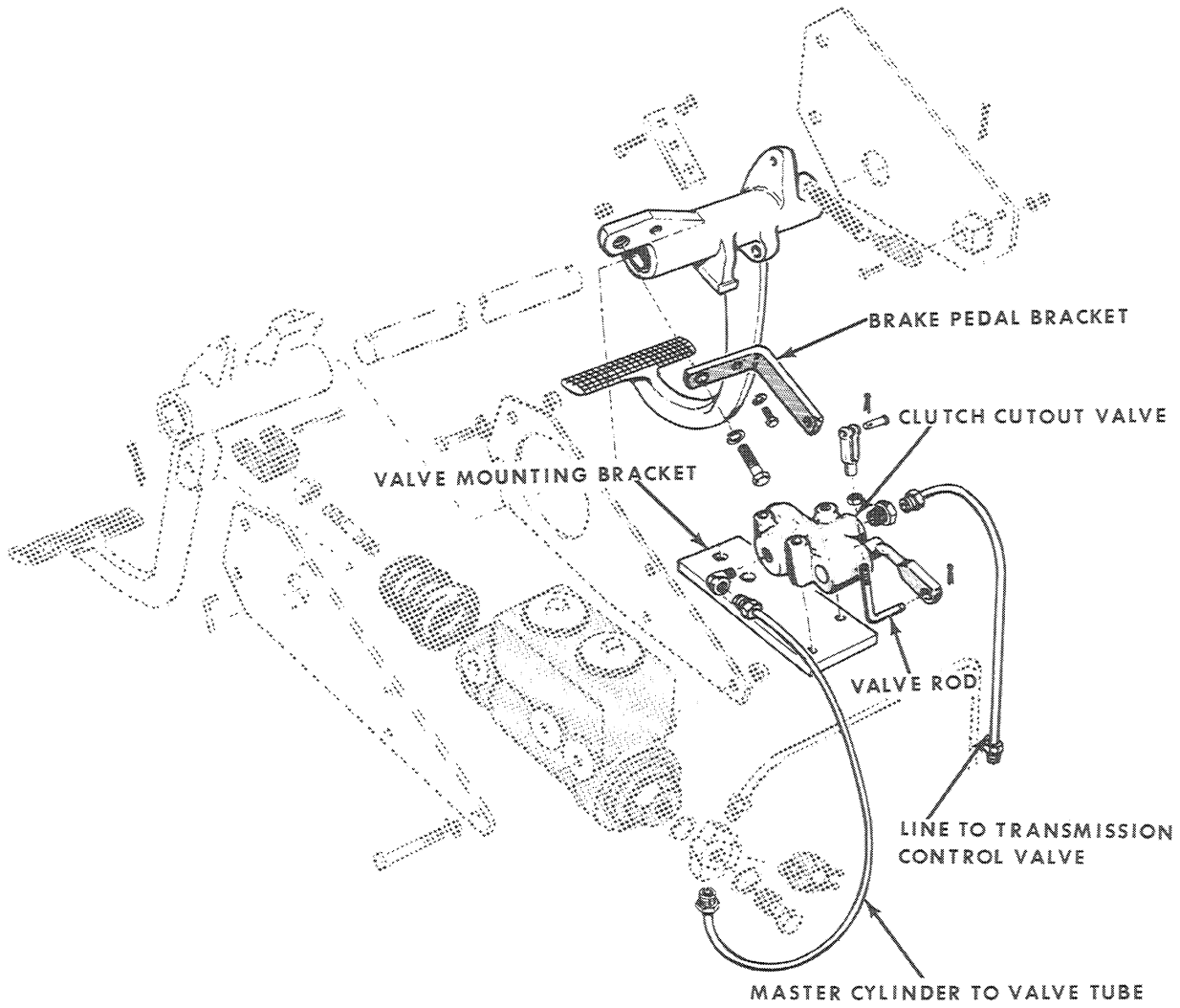

Figure W-66

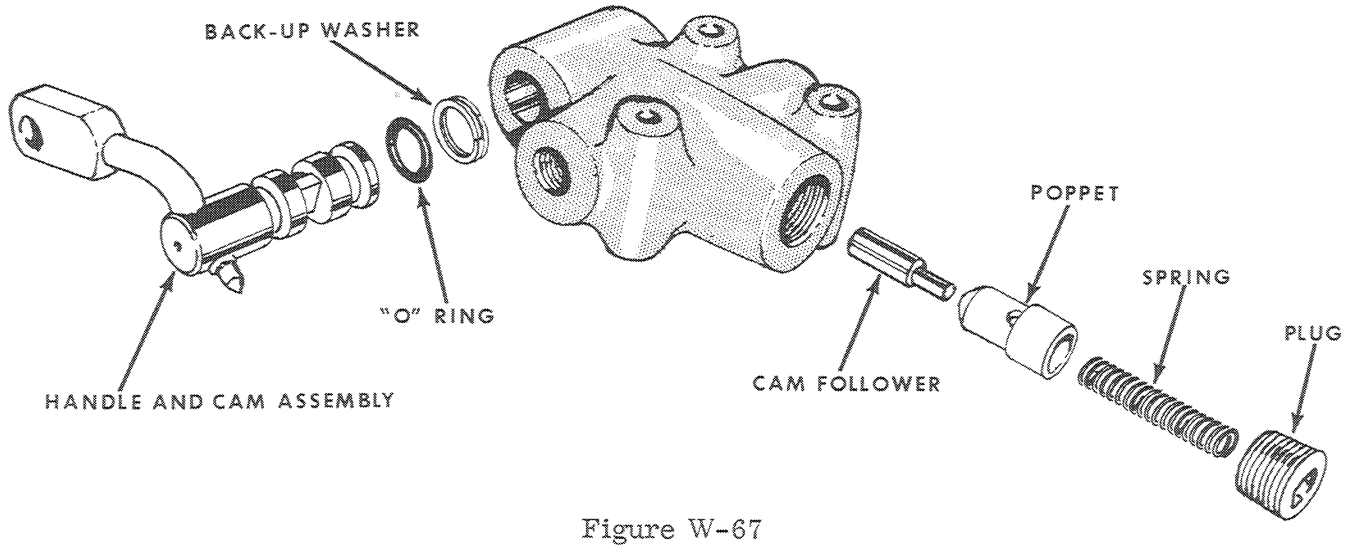

Figure W-67

SECTION

3W

SERVICING THE

HYDROVAC BRAKE SYSTEM

Burl. Form 9-74563 Printed in U.S.A.

TABLE OF CONTENTS

SPECIFICATIONS 3W-3

GENERAL 3W-4

FLOW DIAGRAMS . . . . . 3W-6 thru 3W-11

Engine Running - Brakes Not Applied 3W-6

Engine Running - Brakes Applied 3W-8

Engine Not Running - Brakes Applied 3W-10

REMOVAL OF THE HYDROVAC COMPONENTS 3W-12

INSTALLATION OF THE HYDROVAC COMPONENTS 3W-12

DISASSEMBLY OF THE MASTER CYLINDER 3W-14

INSPECTION 3W-14

ASSEMBLY 3W-14

DISASSEMBLY OF THE HYDROVAC CYLINDER ASSEMBLY 3W-16

INSPECTION 3W-18

ASSEMBLY . . . . . 3W-20 thru 3W-23

SERVICING THE CHECK VALVE, FILTER AND BREATHER 3W-24

DISASSEMBLY OF THE VACUUM PUMP 3W-26

INSPECTION . . . . . 3W-28 thru 3W-29

ASSEMBLY 3W-30

CHECKING ROTOR CLEARANCES 3W-32

BLEEDING PROCEDURE 3W-34

PRESSURE CHECKS . . . . . 3W-36 thru 3W-37

VACUUM PUMP ADJUSTMENTS 3W-38

SERVICE SUGGESTIONS . . . . . 3W-39 thru 3W-40

SPECIFICATIONS

Brake Fluid Type	70RI Heavy Duty
Hydrovac Cylinder Lubrication Oil	1 Ounce Hi-Lo TCH or Automatic Transmission Fluid Type A.
Vacuum Pump Lubrication (If So Equipped)	Engine Lubricated
Vacuum Pressure	Approximate 20 Inches of Mercury (Vacuum).
Hydraulic Brake Pressure (Power Assist)	Approximately 1500 PSI*.
Bleeding Procedure	Pressure Tank or Manually
Hydrovac Assembly Type	Single Piston 9-1/2 Inch Diameter Cylinder.
Hydrovac Control Valve	Hydraulically Actuated by Master Brake Cylinder.
Vacuum Pump (If So Equipped)	Rotary Sliding Vane Type Pump, Engine Mounted, Belt Driven.
Master Cylinder	Single Stage, Contains Brake Fluid Reservoir For Hydrovac System.
Breather	Replaceable Hair Type
Filter	Replaceable Hair Type
Reservoir	1000 Cubic Inch Displacement

*HYDRAULIC BRAKE PRESSURE WITHOUT POWER ASSIST AVERAGE PERSON SHOULD BE ABLE TO DEVELOP 600 - 800 PSI. BRAKE PRESSURE.

GENERAL

Introduction

The master cylinder supplies the fluid to the hydrovac brake system. It also supplies pressure to activate the control valve in the hydrovac. Power for operation of the hydrovac is supplied by the vacuum at the engine intake manifold or vacuum pump and the external atmospheric pressure.

The Master Cylinder

The master cylinder contains the piston and secondary cup assembly, primary cup, spring retainer and return spring. When a force is exerted on the piston the piston moves forward compressing the oil within the master cylinder, hydrovac cylinder, brake lines and wheel cylinders.

The Hydrovac Cylinder Assembly

The hydrovac cylinder assembly contains the hydraulic cylinder, control valve and vacuum power cylinder. The control valve is operated by the fluid pressure from the master cylinder and regulates the atmospheric pressure to the power cylinder piston. The power cylinder piston moves the hydraulic piston in the hydraulic cylinder. The pressure transmitted to the wheel cylinders is a combination of the hydraulic cylinder pressure plus the master cylinder pressure. ***NOTE*** The model numbers used in the following pages of this section are stamped on a medal tag attached to the assembly hook bolts. Do not lose this tag during servicing of the hydrovac.

The Breather

A breather is incorporated in the hydrovac system to filter the air drawn in by the hydrovac assembly.

The Filter

The filter filters impurities from the air that is being drawn from the hydvac cylinder assembly and reservoir by the vacuum pump or intake manifold.

The Hydrovac Reservoir

Air is removed from the reservoir tank by the pump or intake manifold whenever the engine is running. In the event of an engine failure, there is sufficient vacuum in the reservoir tank to permit several power brake applications before exhausting the vacuum reservoir.

The Check Valve

The operation of the check valve allows a normal flow of air from the hydrovac cylinder assembly and reservoir to the engine intake manifold or vacuum pump. In the event of an engine failure, the check valve prevents the back flow of air to the evacuated system. A secondary function of the check valve is to prevent the entrance of gasoline vapor into the hydrovac system on gasoline engines.

The Pump

The vacuum pump is a rotary, sliding vane type pump. The rotor is eccentrically located in respect to the housing. The pump is dependent on engine oil as a means for lubrication and also for providing a seal. The vacuum pump is operated directly by a belt and pulley drive from the engine and operates at all times when the engine is running drawing air from the hydrovac cylinder assembly and reservoir.

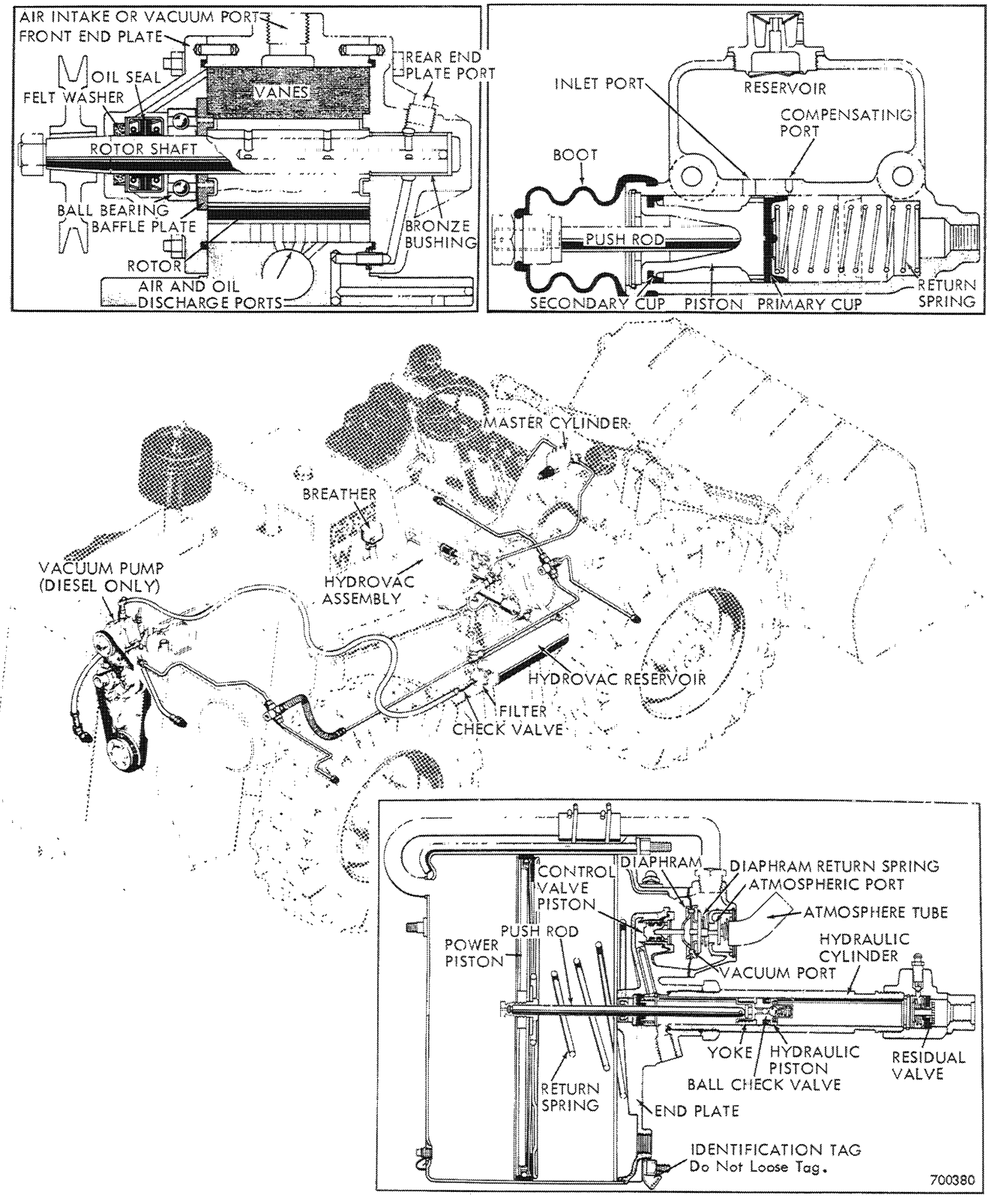
AIR INTAKE OR VACUUM PORT
FRONT END PLATE
OIL SEAL
FELT WASHER
VANES
REAR END PLATE PORT
ROTOR SHAFT
BALL BEARING
BAFFLE PLATE
BRONZE BUSHING
ROTOR
AIR AND OIL DISCHARGE PORTS
INLET PORT
RESERVOIR
COMPENSATING PORT
BOOT
PUSH ROD
SECONDARY CUP
PISTON
PRIMARY CUP
RETURN SPRING
MASTER CYLINDER
BREATHER
VACUUM PUMP (DIESEL ONLY)
HYDROVAC ASSEMBLY
HYDROVAC RESERVOIR
FILTER
CHECK VALVE
CONTROL VALVE PISTON
DIAPHRAM
DIAPHRAM RETURN SPRING
ATMOSPHERIC PORT
ATMOSPHERE TUBE
PUSH ROD
POWER PISTON
HYDRAULIC CYLINDER
VACUUM PORT
YOKE
HYDRAULIC PISTON
BALL CHECK VALVE
RESIDUAL VALVE
RETURN SPRING
END PLATE
IDENTIFICATION TAG
Do Not Loose Tag.
700380

Figure 3W-1

FLOW DIAGRAM

Engine Running - Brakes Not Applied

(Refer to Figure 3W-2)

With the engine running and the brakes not applied, the vacuum pump or engine intake manifold is drawing air from the hydrovac cylinder assembly and reservoir.

As the rotor turns, the vanes are forced out against the pump body bore by centrifugal force. Air is drawn from the air intake or vacuum port and trapped between the vanes. This trapped air is then carried from the vacuum port to the air and oil discharge port which in turn is discharged to the injection pump drive housing.

The pump lubricating oil enters the pump at the rear end plate port. The lubricating oil then is ported through the hole in the bronze bushing to the outside diameter of the rotor shaft. A slight amount of oil flows between the rotor shaft and the bronze bushing. The remainder of the oil enters three radially drilled holes leading to the center of the rotor shaft. The oil then flows through the center of the rotor shaft and then outward through the holes in the shaft to the vanes. A film of oil is formed around the vanes. A seal is thereby provided between the vanes and rotor and between the vanes and pump body.

Some oil enters the front end plate assembly through the holes in the baffle plate and flows through the ball bearing. The flow of oil is aided at this point by the vacuum at the front side of the bearing. The oil at the front side of the bearing is drawn back to the vacuum or discharge port through the passage at the top of the end plate. The lubricating oil is then carried to the air and oil discharge port which in turn is discharged to the injection pump drive housing.

A check valve is located in the system between the pump and the hydrovac cylinder assembly. With the engine running the check valve is always open allowing the vacuum pump or intake manifold to draw air from the system.

With the engine running and the brakes not applied, the atmospheric poppet is closed and the vacuum poppet is open allowing the vacuum pump to draw air from both sides of the power piston. The fluid in the master cylinder and the hydrovac hydraulic cylinder is static.

The residual check valve located in the hydrovac cylinder is closed at all times when the brakes are not applied.

FLOW DIAGRAM

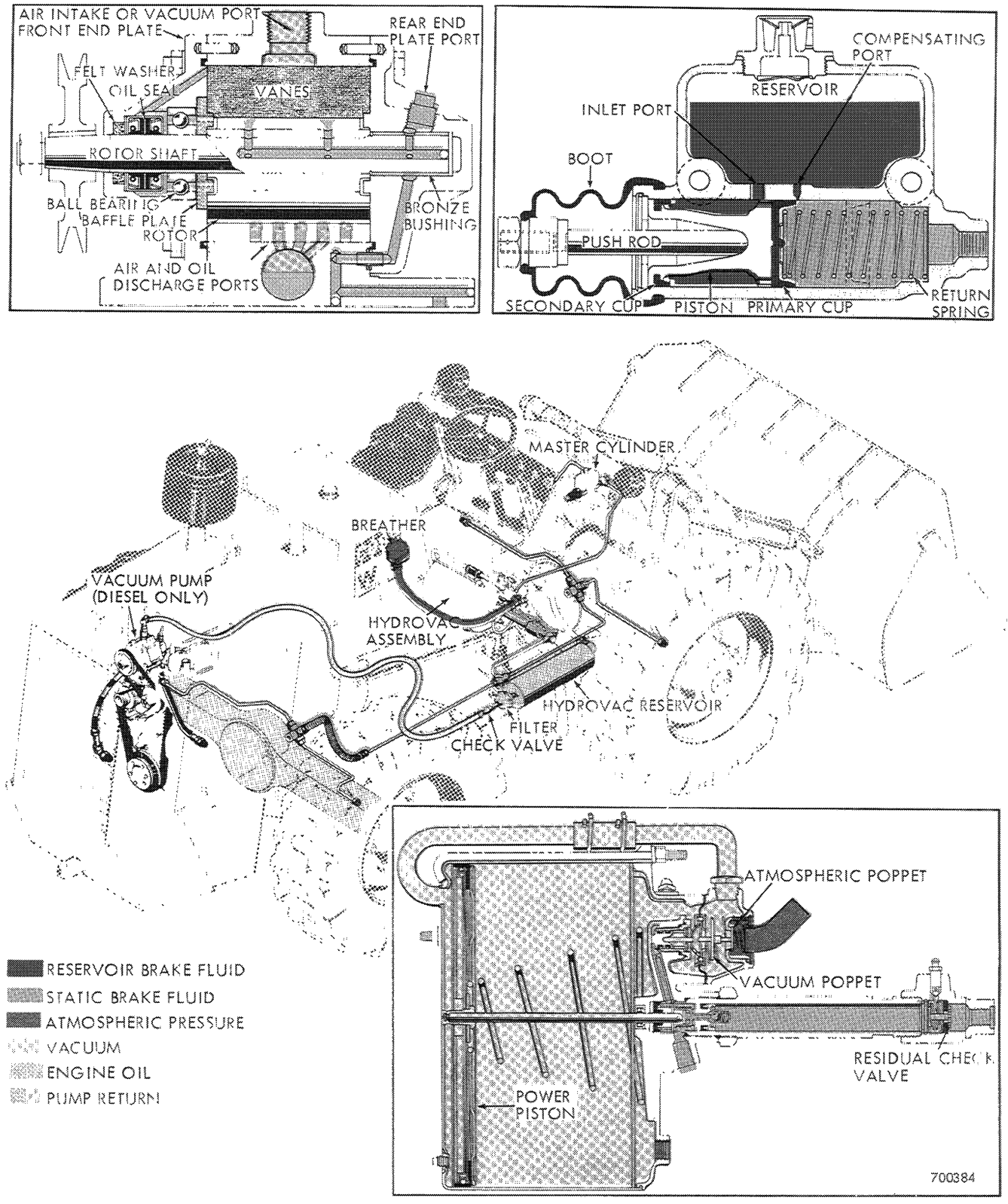

Figure 3W-2

FLOW DIAGRAM

Engine Running - Brakes Applied

(Refer to Figure 3W-3)

With the engine running and brakes applied, the vacuum pump or engine intake manifold is drawing air from the hydrovac cylinder assembly and reservoir.

The vacuum pump and check valve operation is the same as Engine Running - Brakes Not Applied.

With the brakes applied, the piston in the master cylinder is moved forward closing off the compensating port and building up pressure in the master cylinder chamber. This pressure is transmitted to the hydrovac assembly end plate, and flows through the hydraulic piston filling the hydraulic cylinder.

At the same time, pressure is transmitted through a passage to the rear of the control valve piston. Pressure against the rear of the control valve piston moves the piston and diaphram forward compressing the diaphram return spring. This closes off the vacuum port and opens the atmospheric port allowing air from the atmosphere to flow through the atmosphere tube to the rear side of the power piston. The atmospheric pressure against the rear side of the power piston, compresses the return spring and moves the piston, push rod and hydraulic piston forward. The movement of the hydraulic piston allows the yoke to move rearward and the ball check valve is closed, thus hydraulic fluid is trapped in the hydraulic cylinder. This high pressure fluid opens the residual check valve allowing the fluid to flow through the brake lines to the wheel cylinder forcing the brake shoes outward against the brake drum.

FLOW DIAGRAM

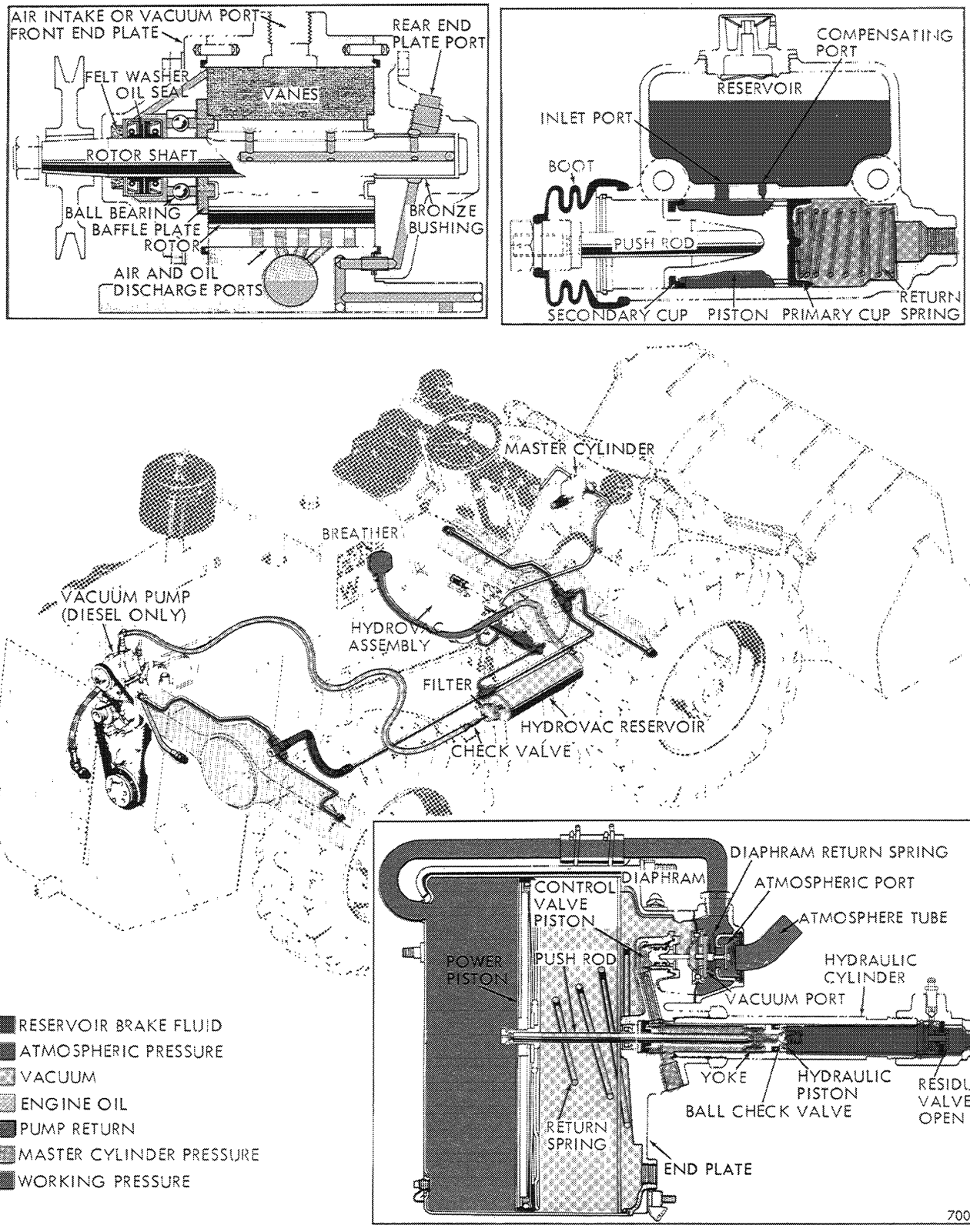

Figure 3W-3

FLOW DIAGRAM

Engine Not Running - Brakes Applied

(Refer to Figure 3W-4)

In the case of an engine failure, there are several brake applications with the power before exhausting the vacuum reservoir. These several brake applications are the same as described on Page 3W-8. With the reservoir exhausted the system operates as follows:

With the engine not running and the brakes applied, the piston in the master cylinder is moved forward closing off the compensating port and building up pressure in the master cylinder chamber. This pressure is transmitted to the hydrovac assembly end plate flowing through the hydraulic piston filling the hydraulic cylinder. The amount of pressure transmitted through the brake lines to the wheel cylinders is dependent upon the force applied by the operator on the brake pedal.

With the vacuum reservoir exhausted, an equal amount of atmospheric pressure exists on both sides of the power piston.

FLOW DIAGRAM

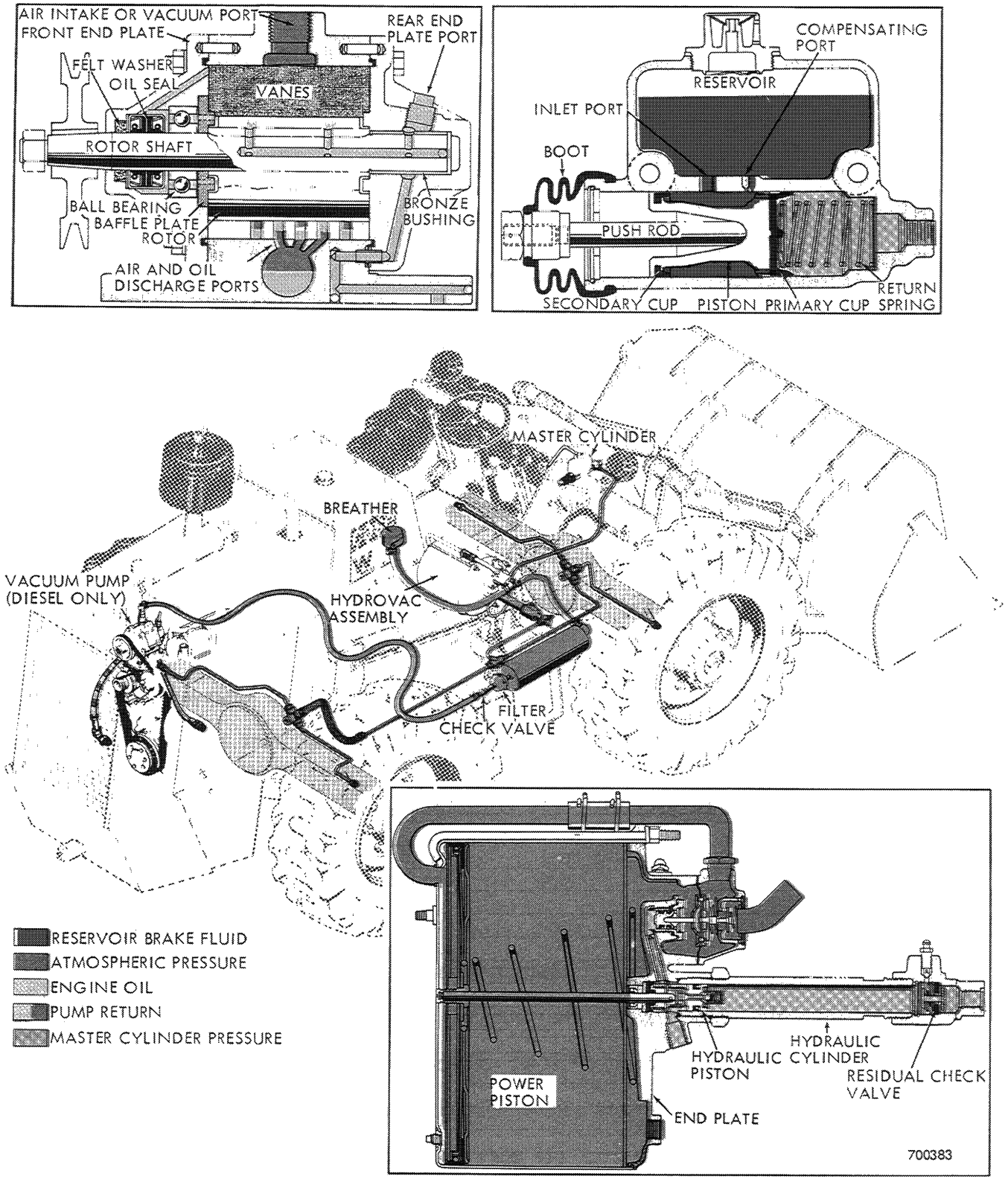

Figure 3W-4

REMOVAL OF THE HYDROVAC COMPONENTS
(Refer to Figure 3W-5)
Master Cylinder

1. Disconnect the brake pedal linkage from the master cylinder push rod.
2. Disconnect the master cylinder brake line.
3. Disconnect the stop light switch wire from the master cylinder if so equipped.
4. Remove master cylinder mounting bolts and master cylinder.

Hydrovac Cylinder Assembly

1. Disconnect master cylinder brake line, breather hose, vacuum hose and hydraulic cylinder line.
2. Remove mounting bolts and hydrovac assembly from loader.

Breather

1. Disconnect breather from hose and remove mounting bolt.

Reservoir, Filter and Check Valve

1. Disconnect the vacuum hoses.
2. Remove reservoir mounting brackets, and then remove reservoir, filter and check valve from the loader.

Pump (If So Equipped)

1. Remove the pump lubricating hose, vacuum hose and return hose.
2. Remove pump mounting bolts, drive belt and pump.

INSTALLATION OF THE HYDROVAC COMPONENTS
(Refer to Figure 3W-5)
Master Cylinder

1. Install the master cylinder and mounting bolts.
2. Connect the master cylinder brake line and brake pedal linkage to the push rod.
3. Connect stop light switch if so equipped to the master cylinder.

Hydrovac Cylinder Assembly

1. Install hydrovac cylinder assembly and mounting bolts.
2. Connect the hydraulic cylinder line, vacuum hose, breather hose and master cylinder line to the hydrovac assembly.

Breather

1. Connect breather hose and install breather mounting bolt.

Reservoir, Filter and Check Valve

1. Install reservoir mounting brackets and connect vacuum hoses.

Pump (If So Equipped)

1. Install pump mounting bolts and drive belt.
2. Connect vacuum hoses, return hoses and pump lubricating hose. Refer to Page 3W-38 for pump adjustments.

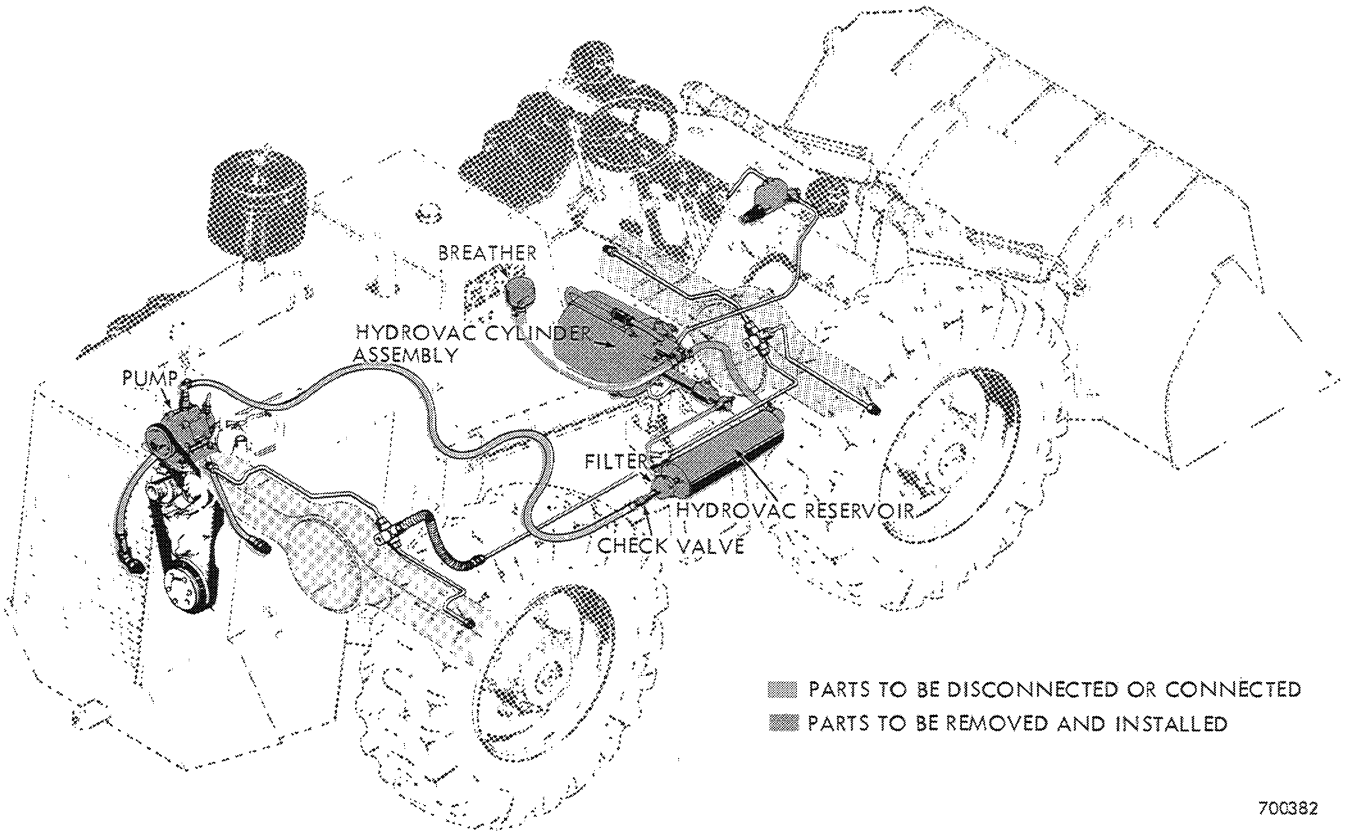
BREATHER
HYDROVAC CYLINDER ASSEMBLY
PUMP
FILTER
HYDROVAC RESERVOIR
CHECK VALVE
PARTS TO BE DISCONNECTED OR CONNECTED
PARTS TO BE REMOVED AND INSTALLED
700382

Figure 3W-5

DISASSEMBLY OF THE MASTER CYLINDER

(Refer to Figure 3W-6)

1. Remove the rubber boot and push rod from the housing.
2. Remove the piston lock ring and stop plate.
3. Remove the piston and secondary cup, primary cup and return spring.
4. Remove the filler cap and gasket.

INSPECTION

(Refer to Figure 3W-6)

With the master cylinder completely disassembled, the component parts can easily be cleaned and inspected for wear, score marks and burrs. All parts that are worn or damaged must be replaced. All seals must be replaced.

Inspect the housing bore for scratches or rough spots. Any small scratches or rough spots can be removed by using a crocus cloth. The housing can also be honed. Do not exceed .004" clearance between piston and bore.

Replace the housing if excessively worn or damaged.

Whenever the master cylinder is disassembled replace the primary cup, piston and secondary cup assembly, lock ring and boot.

ASSEMBLY

(Refer to Figure 3W-6)

1. Install the filler cap gasket and filler cap.
2. Install the return spring, primary cup, secondary cup and piston assembly.
3. Install the piston stop plate and lock ring.
4. Install the push rod and rubber boot.

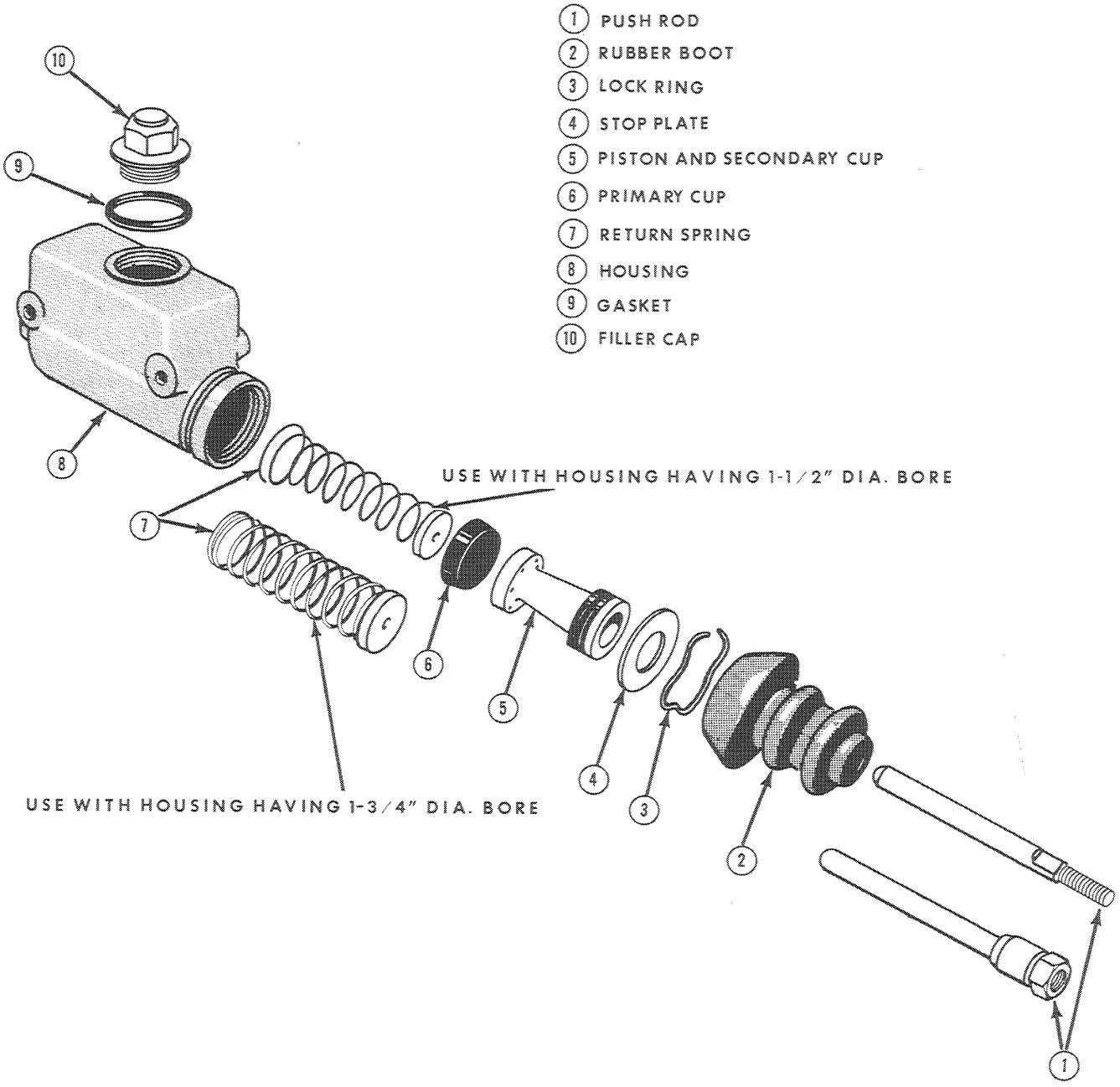
1 PUSH ROD
2 RUBBER BOOT
3 LOCK RING
4 STOP PLATE
5 PISTON AND SECONDARY CUP
6 PRIMARY CUP
7 RETURN SPRING
8 HOUSING
9 GASKET
10 FILLER CAP
USE WITH HOUSING HAVING 1-1/2" DIA. BORE
USE WITH HOUSING HAVING 1-3/4" DIA. BORE

Figure 3W-6

DISASSEMBLY OF THE HYDROVAC CYLINDER ASSEMBLY
(Refer to Figure 3W-7)

1. Loosen the hydraulic cylinder lock nut (1) and unscrew the hydraulic cylinder (2).

2. Clamp the end cap (3) in a vise and remove the rubber seal (4) lock nut (1) and cylinder (2).

3. Remove the copper gasket (5) snap ring (6) stop washer (7) return spring (8) residual valve (9) and bleed screw (10) from the end cap (3).

4. Scribe alignment marks across the cylinder shell (11) end plate (12) valve body (13) and cover (14).

5. Loosen the vacuum hose clamps (15) and slide the vacuum hose (16) forward on the control valve tube (17).

6. Remove the atmosphere tube snap ring (18) tube (19) gasket (20) and poppet spring (21).

7. Remove the control valve cover capscrews (22) cover (14) valve seat spring (23) diaphram (24) and valve cover gasket (25).

8. Remove the poppets, unscrew the staked nut (A) from the vacuum poppet and shaft (B). Remove small atmospheric poppet (C) and large atmospheric poppet (D) as shown in inset A.

9. Remove the hydraulic valve piston assembly (26). Then remove the snap ring (27) stop washer (28) and piston (29) from fitting (30) and fitting gasket (31).

10. Remove the cylinder assembly hook bolt nuts (32) and bolts (33). Then pull the end plate (12) and piston assembly (34) out of the cylinder shell (11).

CAUTION When removing the hook bolt nuts, do not lose the hydrovac identification tag.

11. Push the end plate (12) down so the hydraulic piston (35) protrudes from the end plate (12) and remove the retainer pin (36) that holds the piston (35) to the push rod (37).

12. To disassemble the hydraulic piston remove the snap ring (A) ball retainer (B) return spring (C) ball (D) from the piston (E). Refer to inset B.

13. Remove the end cover (12) cover "O" ring (38) and return spring (39).

14. Remove rubber seal (40) snap ring (41) piston stop washer (42) spring (43) expander washer (44) retainer (45) rubber cup (46) guide washer (47) and seal (48).

15. Clamp the push rod (37) in a vise and remove the push rod nut (49) retainer plate (50) expander ring (51) wick (52) inner plate (53) leather packing (54) rubber seal (55) piston plate (56) and stop washer (57).

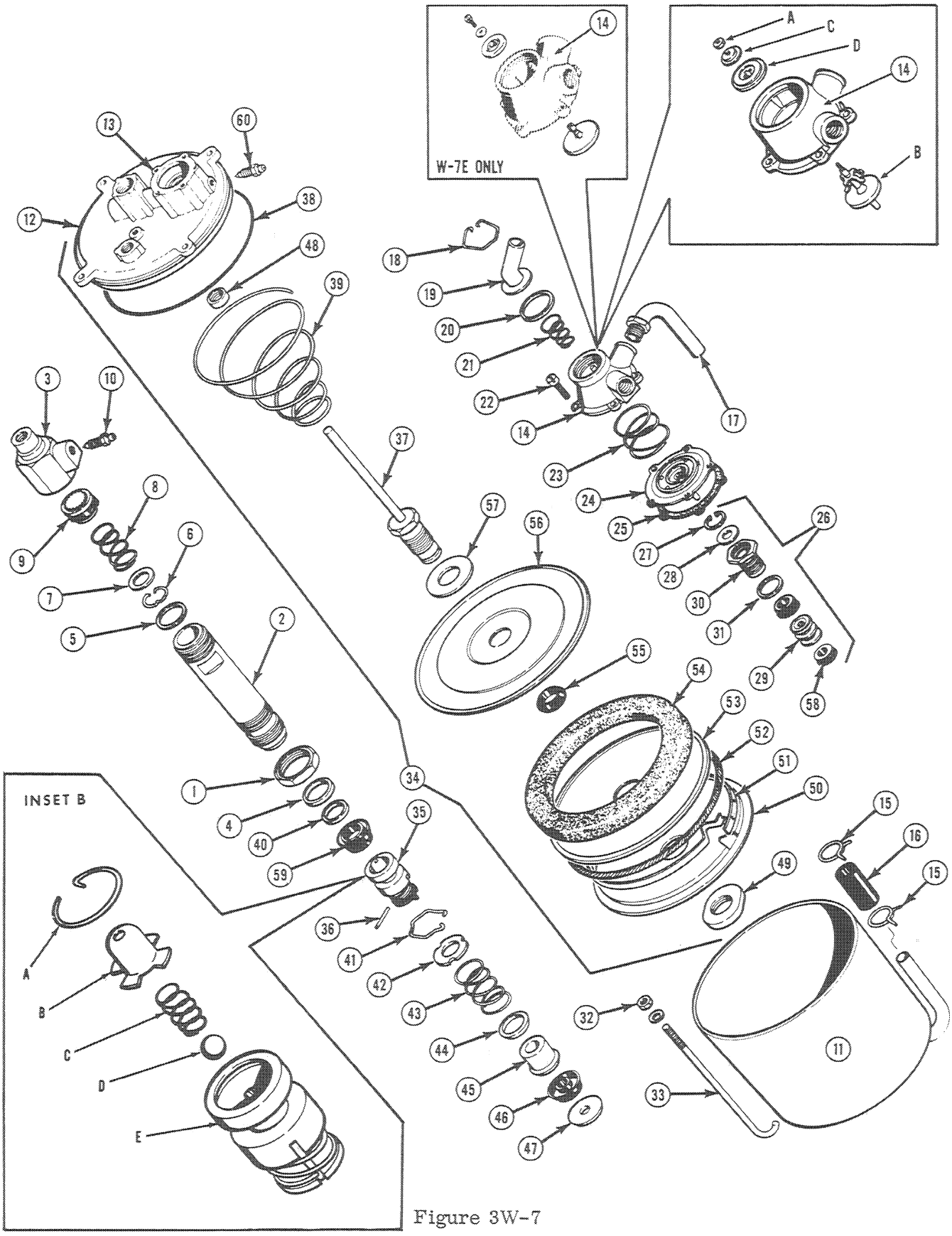
W-7E ONLY
INSET B
A
B
C
D
E
1
2
3
4
5
6
7
8
9
10
11
12
13
14
15
16
17
18
19
20
21
22
23
24
25
26
27
28
29
30
31
32
33
34
35
36
37
38
39
40
41
42
43
44
45
46
47
48
49
50
51
52
53
54
55
56
57
58
59
60

Figure 3W-7

INSPECTION

(Refer to Figure 3W-8)

With the hydrovac cylinder assembly completely disassembled, the component parts can easily be cleaned and inspected for wear, score marks and burrs. All parts that are worn or damaged must be replaced. All "O" rings, seals and gaskets must be replaced.

THE CONTROL VALVE ASSEMBLY

The Diaphram

Carefully inspect the diaphram (24) bellows for cracks, tears or holes. If the bellows are damaged the diaphram must be replaced. Also, inspect the poppet seat for nicks, burrs or scratches that may cause improper seating of the vacuum poppet.

The Piston and Fitting

Inspect the piston (29) and fitting (30) for burrs and score marks. Make sure the piston slides freely inside the fitting. Replace either part if damaged.

The Cover

Inspect the cover (14) for nicks, burrs and score marks at the atmospheric poppet seat. If the seat is damaged the cover must be replaced.

THE HYDRAULIC CYLINDER ASSEMBLY

The Piston and Cylinder

Carefully inspect the piston (35) and cylinder (2) for nicks, burrs and score marks that may cause sticking or damage of the piston and cylinder. Replace either part if damaged. The piston can be disassembled for cleaning and inspected. If any part of the piston is damaged, the complete piston assembly must be replaced.

THE HYDROVAC CYLINDER ASSEMBLY

Inspect the hydrovac cylinder assembly shell (11), retainer plate (50), inner plate (53) and piston plate (55) for rust or corrosion. If any of these parts are rusted, polish with steel wool or fine double "O" sand paper. Clean thoroughly after polishing.

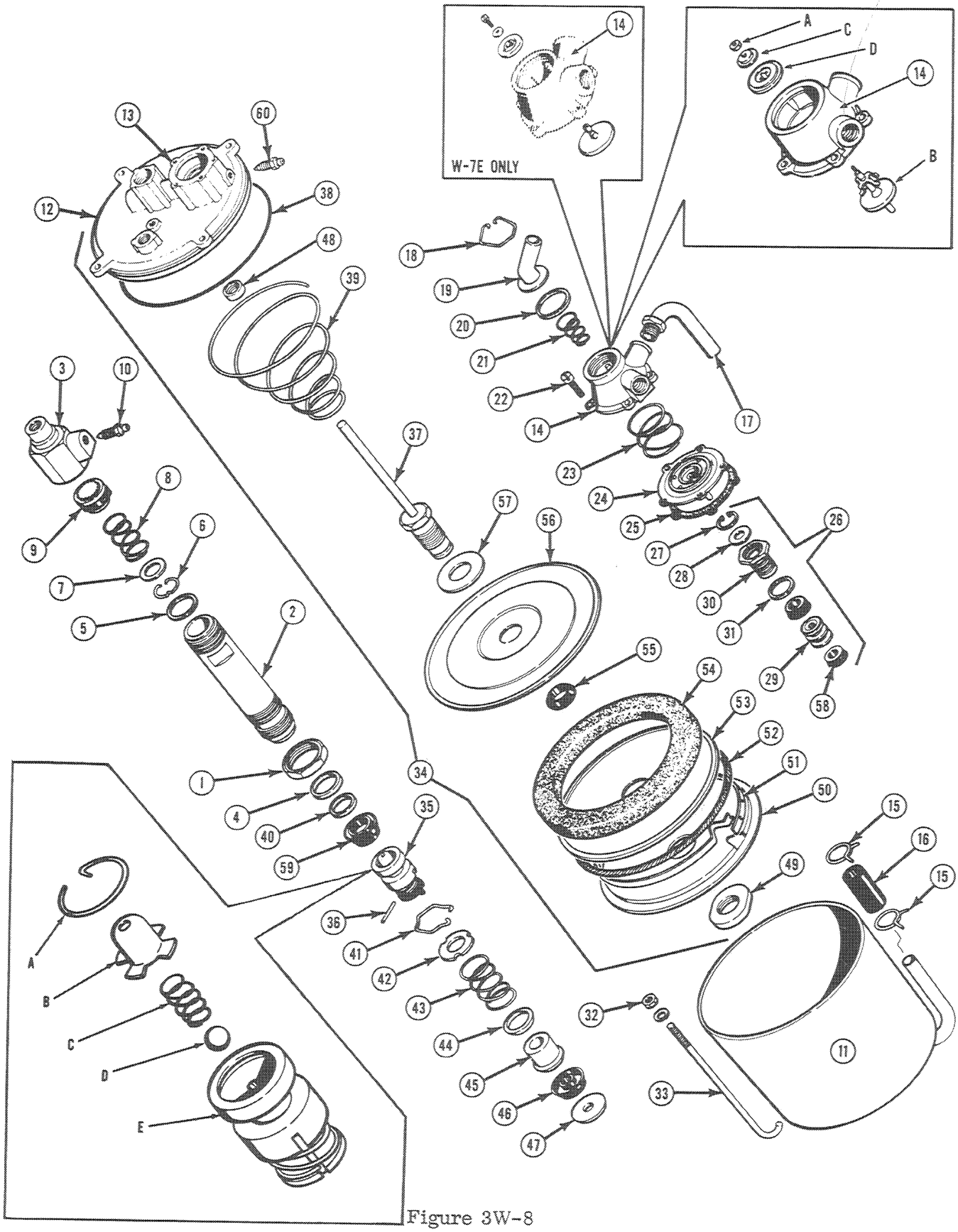
W-7E ONLY
A
B
C
D
E
1
2
3
4
5
6
7
8
9
10
11
12
13
14
15
16
17
18
19
20
21
22
23
24
25
26
27
28
29
30
31
32
33
34
35
36
37
38
39
40
41
42
43
44
45
46
47
48
49
50
51
52
53
54
55
56
57
58
59
60

Figure 3W-8

ASSEMBLY

(Refer to Figure 3W-9)

1. Press the oil seal (48) into the end plate (12). Seal lip must face hydraulic cylinder side.

2. Install guide washer (47) with chamfered side into bore of end plate (12). Coat rubber cup (46) with brake fluid and install into bore with lip facing out. Install retainer (45) expander washer (44) with chamfer side next to retainer, spring (43) and stop washer (42). Press down and install snap ring (41) into groove in end plate (12) bore.

3. Coat the valve piston cups (58) with brake fluid and install with the lips toward the end of the valve piston (29) opposite the hole.

4. Install the stop washer (28) and snap ring (27) in the fitting (30).

5. Install the valve piston (29) into the fitting (30) from the rear with the hole end next to the stop washer (28).

6. Install the fitting gasket (31) on the fitting (30) and install the fitting assembly in the valve body (13). Tighten securely to prevent leakage.

7. Install cover gasket (25) and diaphram (24) with the stem of the diaphram in the hole of valve piston (29) in the valve body (13).

8. Install the vacuum poppet (B) into the rear of the cover (14) with the threaded end of the vacuum poppet shaft first. Then install the large atmospheric poppet (D) with the step away from the vacuum poppet (B).

9. Center the valve seat spring (23) on the diaphram (24) and align the scribe marks on the valve body (13) and cover (14) and install five screws (22). Tighten securely. Then install the small atmospheric poppet (C) with the step away from the large poppet. Install the nut (A) and tighten securely. Stake nut in place.

10. Install the poppet spring (21) with small end on the atmospheric poppet in valve cover (14). Place the gasket (20) and the atmospheric tube (19) in the cover (14) and install snap ring (18).

11. Clamp the push rod (37) in a vise and install the stop washer (57) piston plate (56) with chamfered side of hole up, rubber seal (55) leather packing (54) with lip up, inner plate (53) lip down, wick (52) saturated in Case Hi Lo TCH, cut to length. Install expander ring (51) with barbs against wick.

NOTE

The notch at the loop end of the expander ring (51) must be hooked under the clip at the opposite end of the expander ring (51).

12. Position retainer plate (50) with cut-out portion over loop of expander ring (51). Install push rod nut (49) and tighten nut evenly.

NOTE

Make sure all parts are on common center and retainer plate (50) does not turn while tightening the nut (49). Stake nut in two places.

13. Install ball (D) on its seat in the hydraulic piston (E). Install return spring (C), retainer (B) and snap ring (A). Coat rubber cup (59) with brake fluid and assemble in recess of piston (35) with lip of cup toward snap ring (A).

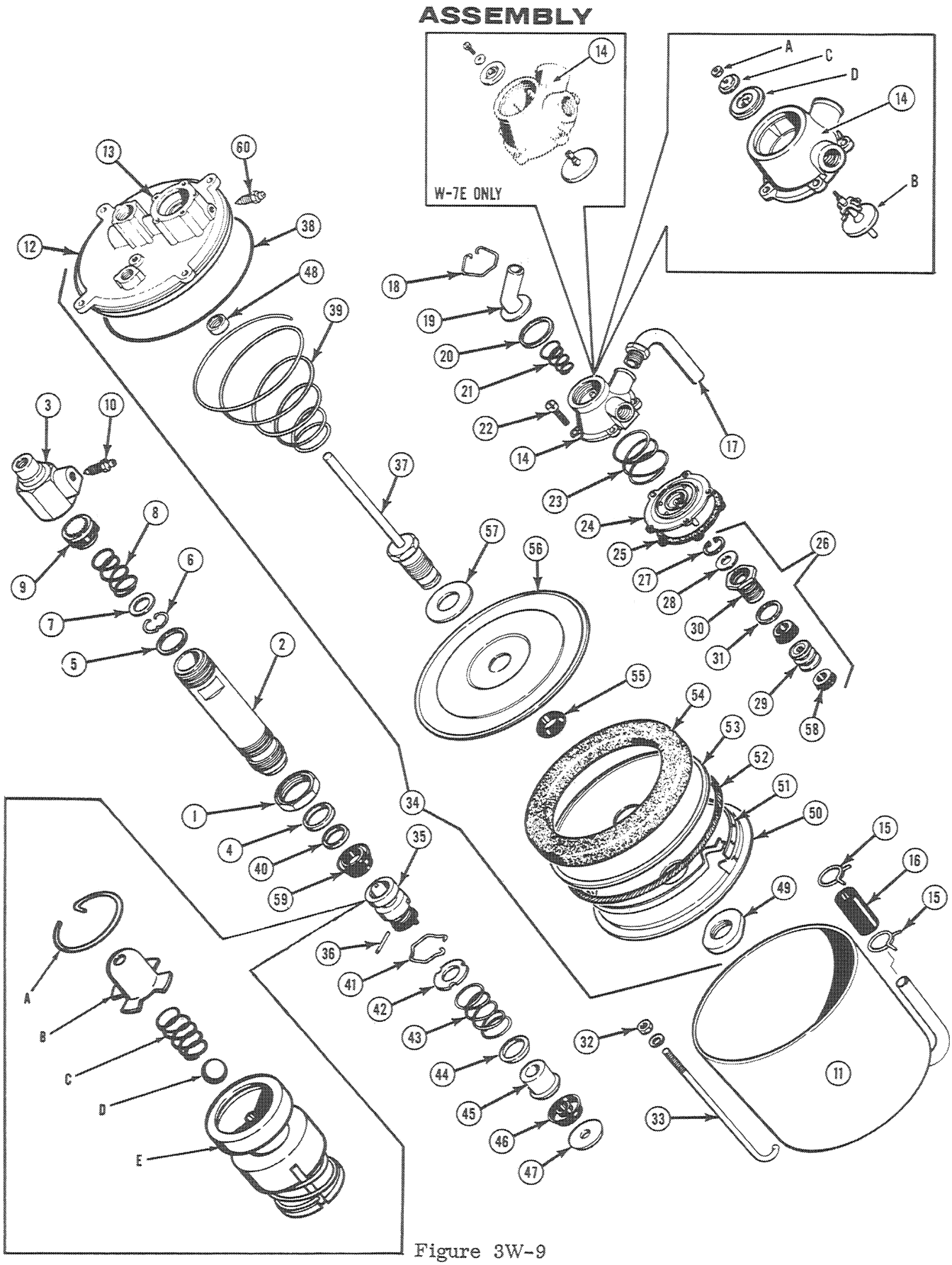
ASSEMBLY
W-7E ONLY
A
C
D
14
B
13
60
12
38
48
39
18
19
20
21
22
14
17
3
10
37
23
24
25
27
28
30
31
29
58
26
8
9
6
7
5
2
57
56
55
54
53
52
51
50
15
16
15
49
34
35
1
4
40
59
36
41
42
43
44
45
46
47
32
33
11
A
B
C
D
E

Figure 3W-9

ASSEMBLY

(Refer to Figure 3W-10)

14. Clamp end cap (3) in a vise and install residual valve (9), return spring (8), stop washer (7), snap ring (6) and copper gasket (5).

15. Screw flat end of hydraulic cylinder (2) in the end cap (3). Use open end wrench on flat portion of cylinder and tighten securely.

16. Assemble lock nut (1) on cylinder (2) to inner series of threads. Install rubber seal (4) next to lock nut (1) and bleeder screw (10) in end cap (3).

17. Position power piston assembly so push rod (37) is straight up. Coat push rod (37) with brake fluid. Place small end of the return spring (39) down over the push rod. Position the end plate (12) over the large diameter of the return spring (39). Guide push rod through seal (48) and stationary parts in end plate (12).

18. Compress return spring (39) until the end of push rod (37) protrudes through the end plate (12) sufficiently to install the hydraulic piston (35) and retainer pin (36).

NOTE

It will be necessary to compress the retainer spring of the piston (35) to attach the piston assembly (35) to the push rod (37) with the retainer pin (36).

19. Coat the bore of hydraulic cylinder (2) with brake fluid and install rubber seal (40) and cylinder over hydraulic piston assembly.

NOTE

Screw cylinder into end plate hand tight. Align end cap bleed screw (10) with the end plate bleed screw (60) so both are up.

20. Tighten lock nut (1) against end plate.

21. Coat cylinder shell (11) internally with Case Hi Lo TCH or Automatic Transmission Fluid Type A.

22. Install cover "O" ring (38) in groove of end plate (12) and insert power piston and end plate assembly into cylinder shell (11) by tipping to one side to avoid damaging the leather packing. Align the scribe marks between the cylinder shell (11) and end plate (12).

23. Install hook bolts (33) lockwashers and nuts (32). Tighten nuts evenly.

24. Slide vacuum hose (16) on cylinder shell tube and install hose clamps.

LUBRICATION

Pour 1 oz. of Case Hi Lo TCH or Automatic Transmission Fluid - Type A into cylinder shell (11) by removing lubrication plug (61). During lubrication engine must be off and brakes must be in the released position. Lubricate unit every six months.

CAUTION

Lubricate the Hydrovac only after it has been permanently installed on the vehicle. This is a safeguard against lubricating oil entering the hydraulic portion of the Hydrovac and brake system resulting in damage to the rubber parts.

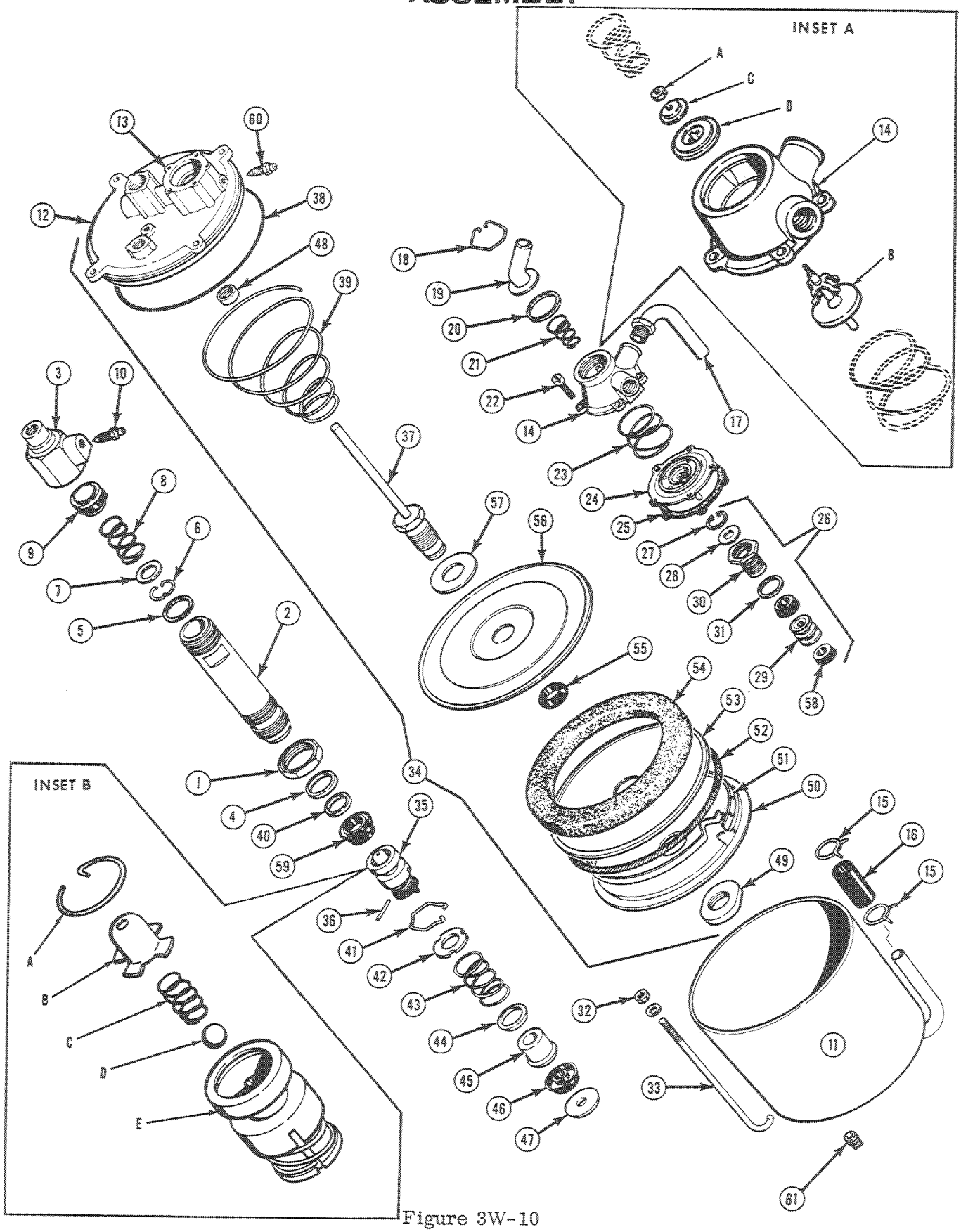
INSET A
INSET B
A
B
C
D
E
1
2
3
4
5
6
7
8
9
10
11
12
13
14
15
16
17
18
19
20
21
22
23
24
25
26
27
28
29
30
31
32
33
34
35
36
37
38
39
40
41
42
43
44
45
46
47
48
49
50
51
52
53
54
55
56
57
58
59
60
61

Figure 3W-10

SERVICING THE CHECK VALVE, FILTER AND BREATHER

CHECK VALVE

(Refer to Figure 3W-11)

Disassembly

1. Remove poppet retainer, check valve spring, seal retainer and poppet seal from check valve housing.

Inspection

Thoroughly clean and inspect all parts. If the housing seat or threads are damaged replace complete assembly. Always replace the poppet seal.

Assembly

1. Assemble the seal retainer on the poppet seal.

2. Install the poppet seal assembly with the flat side toward the seat. Then install check valve spring and poppet retainer spring in its groove.

FILTER

(Refer to Figure 3W-12)

Disassembly

1. Remove the six nuts, lockwashers and screws from the filter assembly.

2. Separate the two filter halves and remove the gasket, hair and screens.

Inspection

Clean and inspect the filter halves and screens. Replace gasket and hair.

Assembly

1. Install a screen in each filter half - then install new hair and gasket.

2. Install the six screws, nuts and lockwashers.

BREATHER

(Refer to Figure 3W-13)

Disassembly

1. Remove the screening plate fastener, screening plate and hair from the breather shell.

Inspection

Clean and inspect the screening plate and breather shell. Always install new hair.

Assembly

1. Install new hair, screening plate and fastener in filter shell.

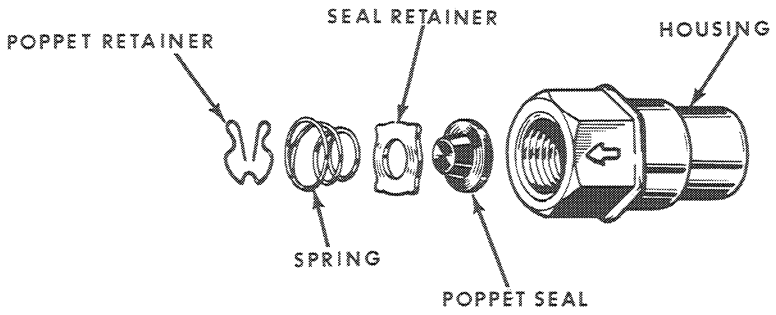

Figure 3W-11

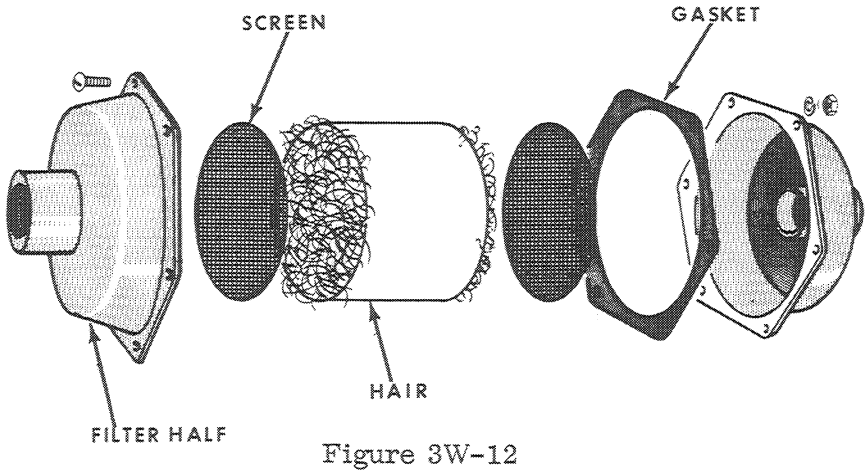

Figure 3W-12

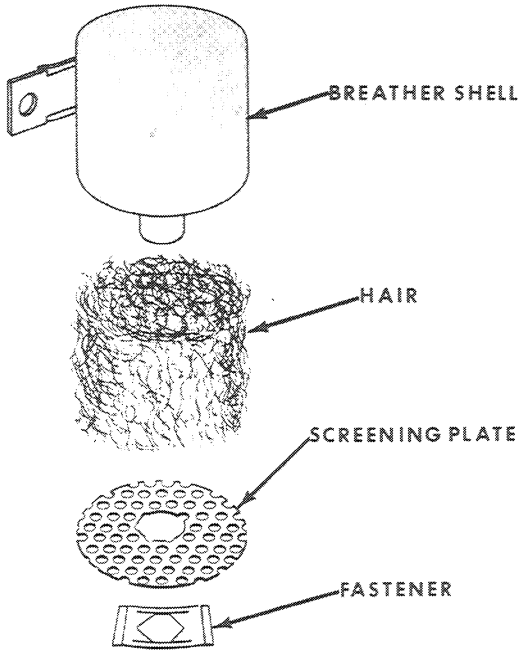

Figure 3W-13

DISASSEMBLY OF THE VACUUM PUMP

(Refer to Figure 3W-14)

1. Remove the cotter pin and castellated nut from the end of the rotor shaft.

2. Remove the pulley from the shaft using OTC No. 1002 Puller. The pulley is keyed to the pump rotor shaft. Unless the key is damaged, the pulley should come off the shaft very easily.

3. Scribe alignment marks between the housing and both end plates to assure correct assembly of the end plates to the housing. Remove the six nuts from the bolts and drive the bolts out of the end plates and housing using a 3/16" diameter rod.

4. Using a fibre mallet if necessary, remove the rear end plate and front end plate-rotor assembly from the housing.

5. Remove the flat rubber ring from the front end plate and the flat rubber ring and oil port gasket from rear end plate.

6. Remove the oil port gasket retainer.

IMPORTANT

DO NOT REMOVE THE BUSHING FROM THE REAR END PLATE. DO NOT REMOVE THE TWO DOWEL PINS IN THE HOUSING UNLESS THEY ARE TO BE REPLACED.

7. Remove the three rotor vanes from the rotor.

CAUTION

USE CARE NOT TO SCRATCH THE POLISHED SURFACE OF THE ROTOR SHAFT.

8. Place the outer edge of the machined surface of end plate on wood blocks and drive out the baffle plate and ball bearing. Use a 1/4 to 3/8 inch diameter rod through the opening on the pulley side of the end plate.

9. Remove the felt washer from the pulley side of the end plate.

10. Using the special tool, inset A, drive out the oil seal and seal gasket from the end plate.

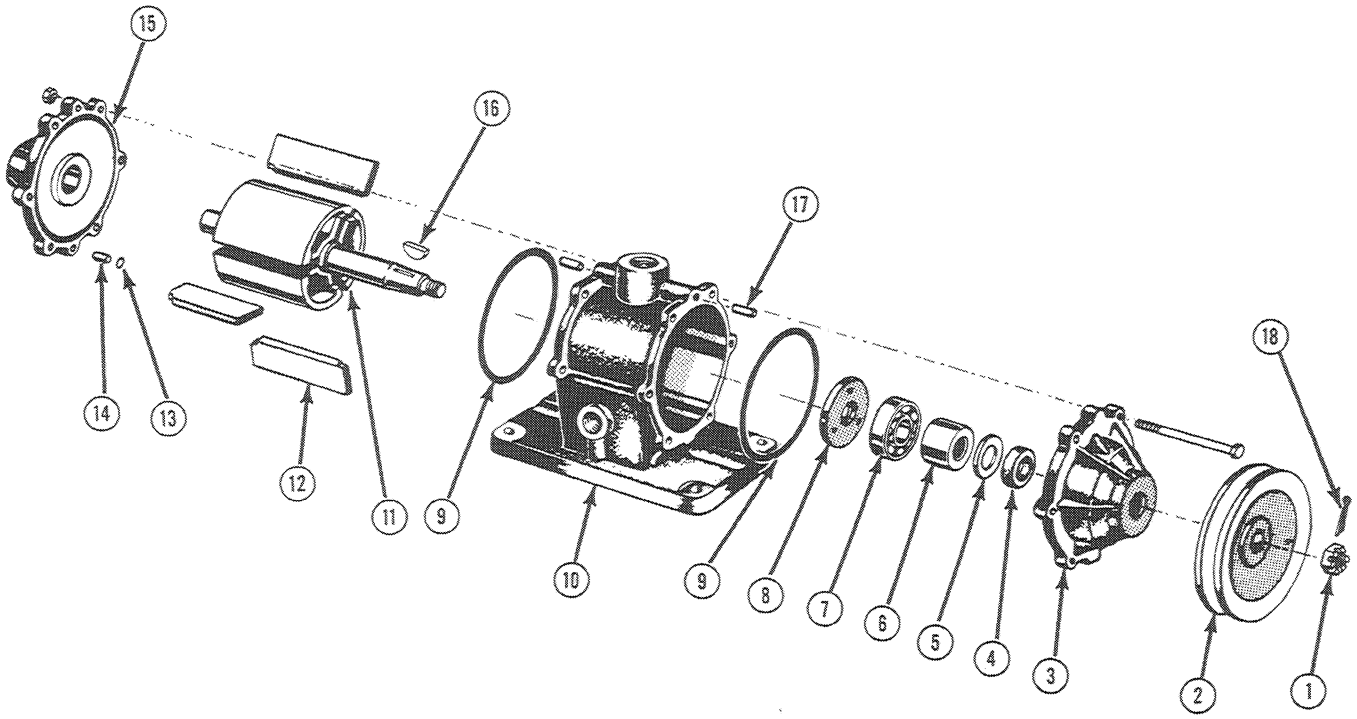

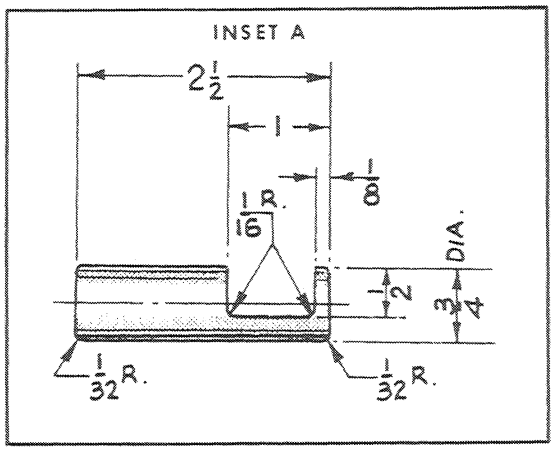

1. CASTELLATED NUT
2. PULLEY
3. FRONT END PLATE
4. FELT WASHER
5. SEAL GASKET
6. OIL SEAL
7. BALL BEARING
8. BAFFLE PLATE
9. FLAT RUBBER RING
10. HOUSING
11. ROTOR
12. VANE
13. OIL PORT GASKET
14. OIL PORT GASKET RETAINER
15. REAR END PLATE
16. KEY
17. DOWEL PIN
18. COTTER PIN

Figure 3W-14

INSPECTION

(Refer to Figure 3W-15)

With the pump completely disassembled, the component parts can easily be cleaned and inspected for wear, cracks, score marks and burrs. All parts that are worn or damaged must be replaced. All "O" rings and seals must be replaced.

Front and Rear End Plates

Inspect the finished surface of both the front and rear end plates by placing a scale or straight edge across the surface, inset A. Using a feeler gauge, the wear must not exceed .003 inches. If the surface of either end plate is worn excessively or scored, replace the end plate. Inspect the bronze bushing in the rear end plate for looseness, wear and scoring. If the bushing is defective, replace the complete rear end plate assembly.

The clearance of the rotor shaft (at the rear end plate) to the rear end plate bushing should not exceed .007 inch. The outside diameter of the rotor shaft should be .7485 - .7495 inches. The inside diameter of the bushing should be .7500 - .7505 inches.

Oil Seal

A new oil seal must always be installed whenever the pump is disassembled. A press fit should exist when installing the seal. The outside diameter is 1.501 - 1.505 inches. The inside diameter of the end plate is 1.498 - 1.500 inches.

Ball Bearing

Inspect the ball bearing for wear or damage. Inspect the rotor shaft for wear at the point where the shaft rides in the ball bearing. The bearing should slide on the shaft without interference, but should not be loose. The inside diameter of the bearing is .7872 - .7874 inches. The outside diameter of the rotor shaft (at the front end plate) is .7867 - .7872 inches. Check the fit of the bearing in the front end plate. The bearing is 1.8501 - 1.8504 inches. The inside diameter of the end plate recess is 1.8495 - 1.8504 inches.

Baffle Plate

Inspect the inside diameter of the baffle plate hole for wear. There must be clearance between the baffle plate and the rotor shaft at all times. The baffle plate must not fit loosely in the front end plate and a slight press fit is made when installing the plate. The inside diameter of the recess in the front end plate is 2.250 - 2.251 inches.

Housing

Inspect the inside of the pump housing for score marks or burrs. Shallow marks or grooves extending around the inside diameter surface (direction of rotor rotation) are not objectionable. These marks will usually be found after the pump has been in operation for a short period of time. The length of the housing at the machined flat surfaces (not the ridges at each end) is 3.188 - 3.189 inches. This should be measured at six equally spaced points on the housing. See inset B.

Rotor Shaft

Inspect the rotor shaft at the point it is in contact with the oil seal. If the outside of the shaft is rough or scratched, it should be polished down slightly with a fine grade emery cloth (grade #3). The rotor and shaft can be rotated in a lathe clamped at the rear end plate end of shaft. Be careful not to polish the shaft undersize at the contact point with the ball bearing (.7867 - .7872 inches). Remove all emery dust and dirt after polishing.

INSPECTION
(Refer to Figure 3W-15)
Rotor and Vanes

Inspect the outside ends of the aluminum rotor. There should be no signs of uneven wear. Inspect the vane slots for burred edges or score marks. The length of the rotor is 3.181 - 3.182 inches, inset C. If the rotor is worn or scored, the rotor and shaft assembly must be replaced.

Check the vanes for wear, scoring or embedded particles of metal. Inspect the curved edges of the vane which comes in contact with the housing. There must be no signs of separation or splitting. The separation is usually found about 5/8 inches from the end of the vanes on the curved edge. Check the vanes to rotor clearance by using a feeler gauge., inset D. The clearance must not be more than .020 inches for efficient pump operation. If the clearance is excessive, replace the vanes. If new vanes are installed, the clearance must not be less than .0045 inches. If the clearance is less than .0045 inches, it can be increased by rubbing the sides of the vanes with emery cloth. The length of the vanes must not be greater than the length of the rotor.

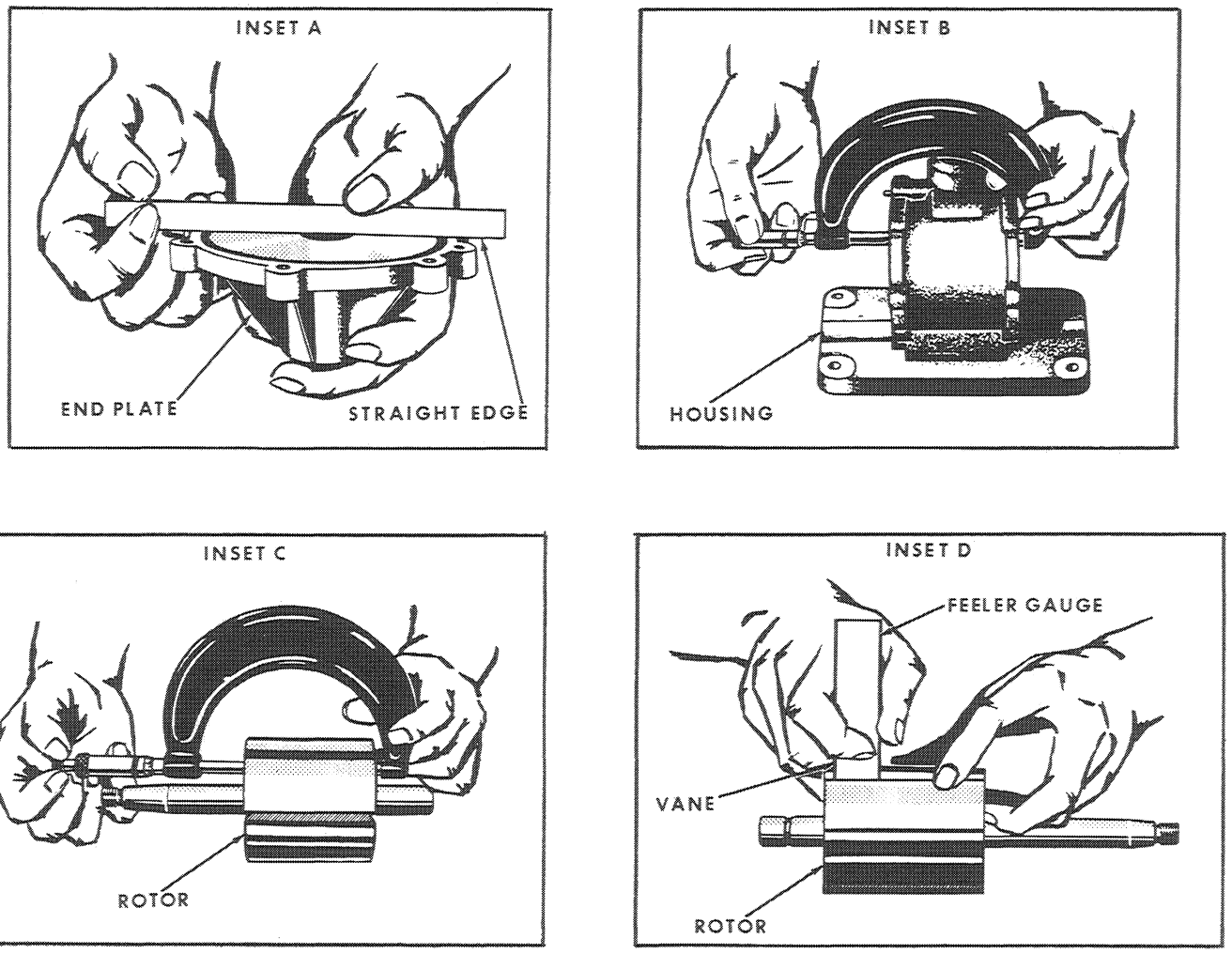

Figure 3W-15

ASSEMBLY OF THE PUMP
(Refer to Figure 3W-16)

1. Place pulley side of end plate against work bench.

2. Dip felt washer and double lip oil seal in SAE 30 oil. Install felt washer and gasket in the end plate.

3. Press the oil seal into the end plate until it is against the gasket, inset A.

4. Dip the ball bearing in SAE 30 oil and install the bearing in the end plate.

5. Press the baffle plate into the end plate with the beveled edge of the baffle plate toward the bearing.

IMPORTANT

THE BAFFLE PLATE MUST BE FLUSH WITH OR BELOW THE FINISHED SURFACE OF THE END PLATE, INSET A.

6. Coat the rotor shaft with SAE 30 oil. Using the special tool, inset B, over the end of the rotor shaft, install the end plate on the shaft. Drive the end plate assembly on the shaft, using a tubular piece of metal over the rotor shaft. Make sure finished surface of the end plate makes contact with the end of the rotor.

7. Place the flat rubber ring in the groove of the front end plate. Check the front end plate in housing alignment and assemble the rotor in the housing. Align the dowel pin in its hole in the end plate. Be sure the flat ring is in alignment in the groove in the end plate. Temporarily install two bolts in place to hold the rotor and shaft assembly in alignment in the housing.

NOTE

INSPECT THE OPEN END OF THE HOUSING. PUMP ROTATION IS DETERMINED AS VIEWED FROM THE PULLEY END OF THE PUMP AND IS SHOWN BY THE ARROW ON THE FRONT END PLATE.

8. Coat the rotor vanes with a film of SAE 30 oil and assemble the vanes into the rotor slots by sliding the vanes in end wise with the notched edge of the vanes toward the rotor shaft. Assemble each vane with the rotor slot at its top position. This allows the vane notch to slip over the vane guide on the baffle plate.

NOTE

THE END OF EACH VANE MUST NOT EXTEND BEYOND THE END OF THE ROTOR.

9. Install oil port seal retainer and gasket in the housing. Place flat rubber ring in the groove in the end plate. Coat inside diameter of end plate bushing with SAE 30 oil. Check the rear end plate to housing alignment marks and assemble the end plate to the rotor shaft and housing. Align the dowel pin with the hole in the end plate.

10. Install the remaining bolts and nuts. Tighten the nuts evenly, alternating across the end plate. Tighten the nuts until the end plates are drawn up tightly against the housing.

11. Insert the Woodruff key in the slot in the shaft and assemble the pulley on the shaft with the castellated nut. Install cotter pin.

IMPORTANT

THE VACUUM PUMP MUST NOW BE CHECKED FOR ROTOR TO HOUSING CLEARANCE AND ROTOR TO END PLATE CLEARANCE. REFER TO PAGE 3W-32.

ASSEMBLY

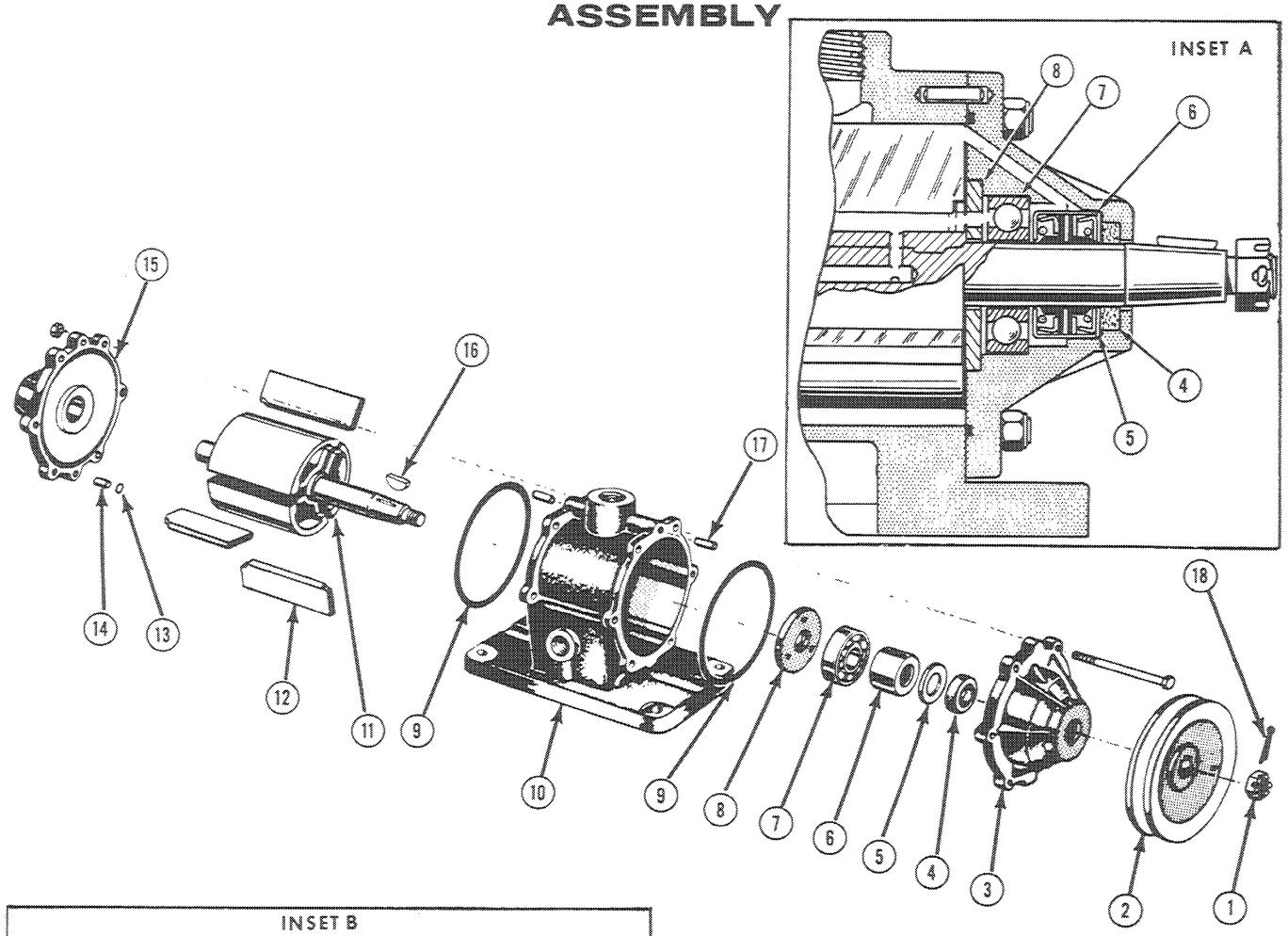

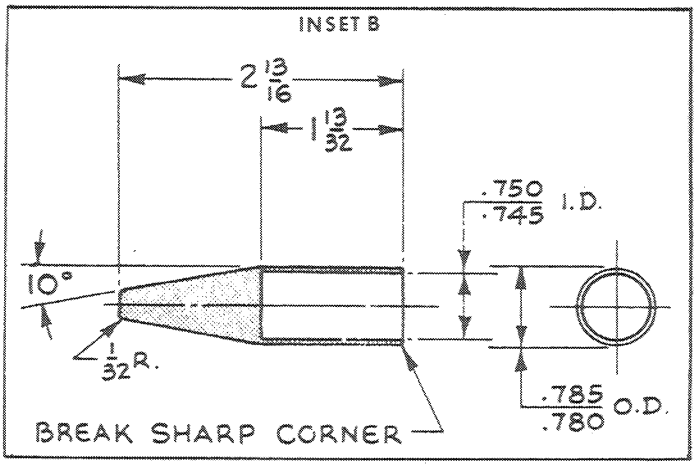

1. CASTELLATED NUT
2. PULLEY
3. FRONT END PLATE
4. FELT WASHER
5. SEAL GASKET
6. OIL SEAL
7. BALL BEARING
8. BAFFLE PLATE
9. FLAT RUBBER RING
10. HOUSING
11. ROTOR
12. VANE
13. OIL PORT GASKET
14. OIL PORT GASKET RETAINER
15. REAR END PLATE
16. KEY
17. DOWEL PIN
18. COTTER PIN

Figure 3W-16

CHECKING ROTOR CLEARANCES

Rotor to Housing Clearance
(Refer to Figure 3W-17)

To check the rotor to housing clearance, use the .003 inch and .006 inch feeler gauge. Pass the .003 inch gauge down through the vacuum port and through the minimum clearance between the rotor and the housing. Rotate the rotor by hand counter-clockwise (in opposite direction indicated by arrow on front end plate). While holding the feeler gauge in place rotate the rotor one complete revolution. Repeat this operation with the gauge at both ends of the rotor using the .003 inch and .006 inch gauges. The rotor to housing clearance is from .003 inch to .006 inch. The clearance should "feel" equal at both ends of the rotor. Intermediate gauges between .003 inch and .006 inches are helpful to determine if the clearance is equal.

If the rotor to housing clearance is not correct, correct it by driving on the outer edges of the end plates with a hammer and flat end punch. To avoid cracking the end plate, place the punch between the lugs containing the holes for the bolts.

Moving the end plates horizontally toward the minimum clearance space will tend to decrease the rotor to housing clearance. Moving the end plates horizontally away from the minimum clearance space will tend to increase the rotor to housing clearance. It may be necessary to loosen the bolts to shift the end plates. After adjustment is made, tighten the nuts.

Rotor to End Plate Clearance
(Refer to Figure 3W-18)

To check the rotor to end plate clearance, mount a dial indicator in the manner illustrated. With the indicator in place, move the rotor and shaft assembly back and forth in the pump housing noting the movement on the dial indicator. Check the movement at six equally spaced positions during one complete rotation of the rotor. The rotor to end plate clearance is .004 inches to .008 inches.

If the rotor to end plate clearance is not correct, correct it by shifting the end plates vertically. To shift the end plates downward, drive on the top edge of the end plate with a hammer and punch. To shift the end plates upward, wedge a large screw driver between the bottom of the plate and the housing base.

If the end plates are shifted, the rotor to housing clearance must be checked again as described above.

There must be metal to metal contact at all points between the housing and the end plates. A .001 inch feeler gauge can be used to check any points where the contact is doubtful.

When the clearances are correct, rotate the rotor by hand to make sure no binding is present. Do not confuse binding with normal drag of the oil seal in the front end plate. The oil seal will cause an even slight drag while binding will be uneven at several points during the rotor rotation.

Pour approximately two tablespoons of clean SAE 30 oil into the vacuum port to give initial lubrication when the pump is initially started. Be sure all open ports are capped against the entrance of dust and dirt until the pump is installed.

CHECKING ROTOR CLEARANCES

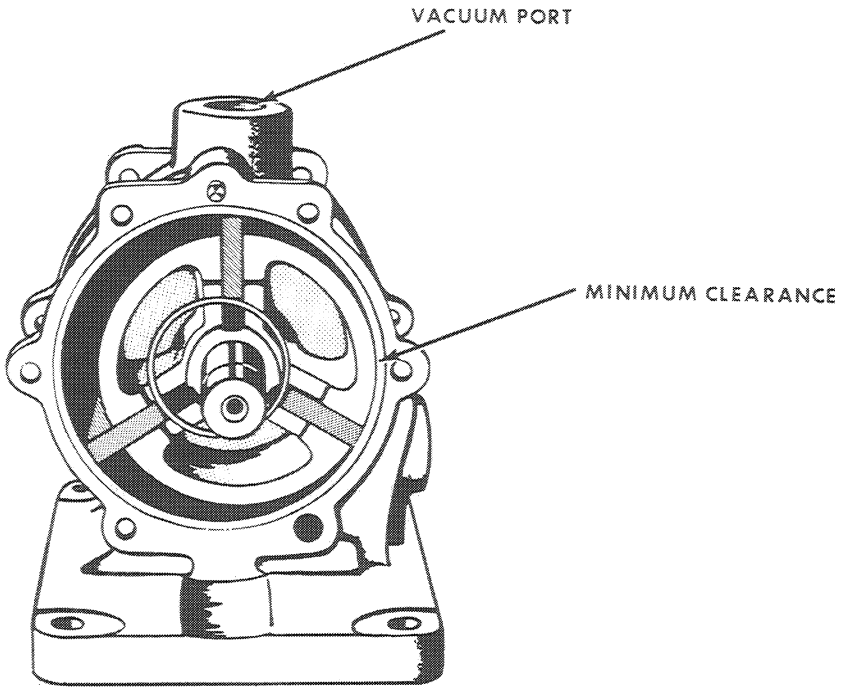

Figure 3W-17

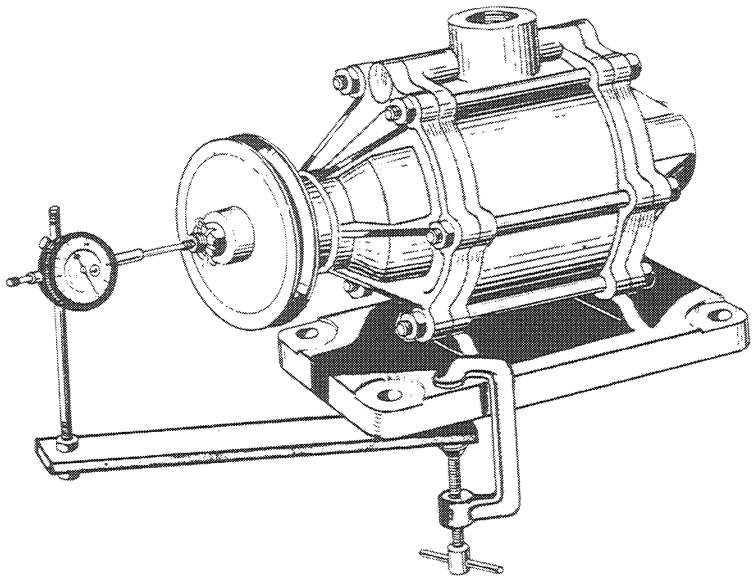

Figure 3W-18

BLEEDING PROCEDURE
(Refer to Figure 3W-19)

After the hydrovac unit has been installed on the Loader, the system must be bled. The hydrovac system can be bled two ways.

1. Pressure Bleeder Tank Procedure
2. Manual Procedure

In either procedure and before the brakes are bled, shut off engine. To relieve the vacuum from the system, apply the brakes several times.

Pressure Tank Bleeding Procedure

1. Clean dirt from around master cylinder filler cap and remove cap.

2. Fill master cylinder with SAE 70R1 Heavy Duty brake fluid.

3. Fill and charge the pressure bleeder tank to 25 - 30 PSI. The tank pressure should not be allowed to fall below 20 PSI.

4. Attach the hose of the pressure bleeder to the master cylinder. Apply pressure to the reservoir bleeding air from the hose before tightening the hose connection at the reservoir port.

5. Attach drain tubes to the bleed screws located on the hydrovac and place free end of drain tube in container.

6. Open the upper bleed screw 3/4 turn.

7. Let out enough fluid until the fluid is free of bubbles. Retighten the bleed screw.

8. Bleed the lower bleed screw in the same manner as upper bleed screw.

9. Attach drain tube to the wheel cylinder furthest from the hydrovac. Open bleed screw 3/4 turn.

10. Let out enough fluid until the fluid is free of air bubbles. Retighten bleed screw.

11. Repeat steps 9 and 10 for the remaining wheel cylinders. Bleed the wheel cylinder nearest the hydrovac last.

12. Remove the pressure bleeder hose from the reservoir and fill the reservoir if necessary with in 3/4 inch of the filler opening.

Manual Bleeding Procedure

1. Clean dirt around master cylinder filler cap and remove cap.

2. Fill master cylinder with SAE 70R1 Heavy Duty brake fluids.

3. Attach drain tubes to the bleed screws located on the hydrovac and place free end of drain tube in container.

4. Depress the brake pedal. While the brake pedal is depressed loosen the upper bleed screw letting out enough fluid until the fluid is free of air bubbles. Re-tighten the bleed screw and release the brake pedal.

5. Bleed the lower bleed screw in the same manner as the upper bleed screw.

NOTE

ALWAYS MAKE SURE THE MASTER CYLINDER IS FULL OF FLUID!

6. Attach drain tube to the wheel cylinder furthest from the hydrovac. While the brake pedal is depressed, loosen the bleed screw letting out enough fluid until the fluid is free from air bubbles. Re-tighten the bleed screw and release the brake pedal.

7. Repeat stop No. 6 for the remaining wheel cylinders. Bleed the wheel cylinder nearest the hydrovac last.

8. Fill reservoir if necessary within 3/4 inch of the filler

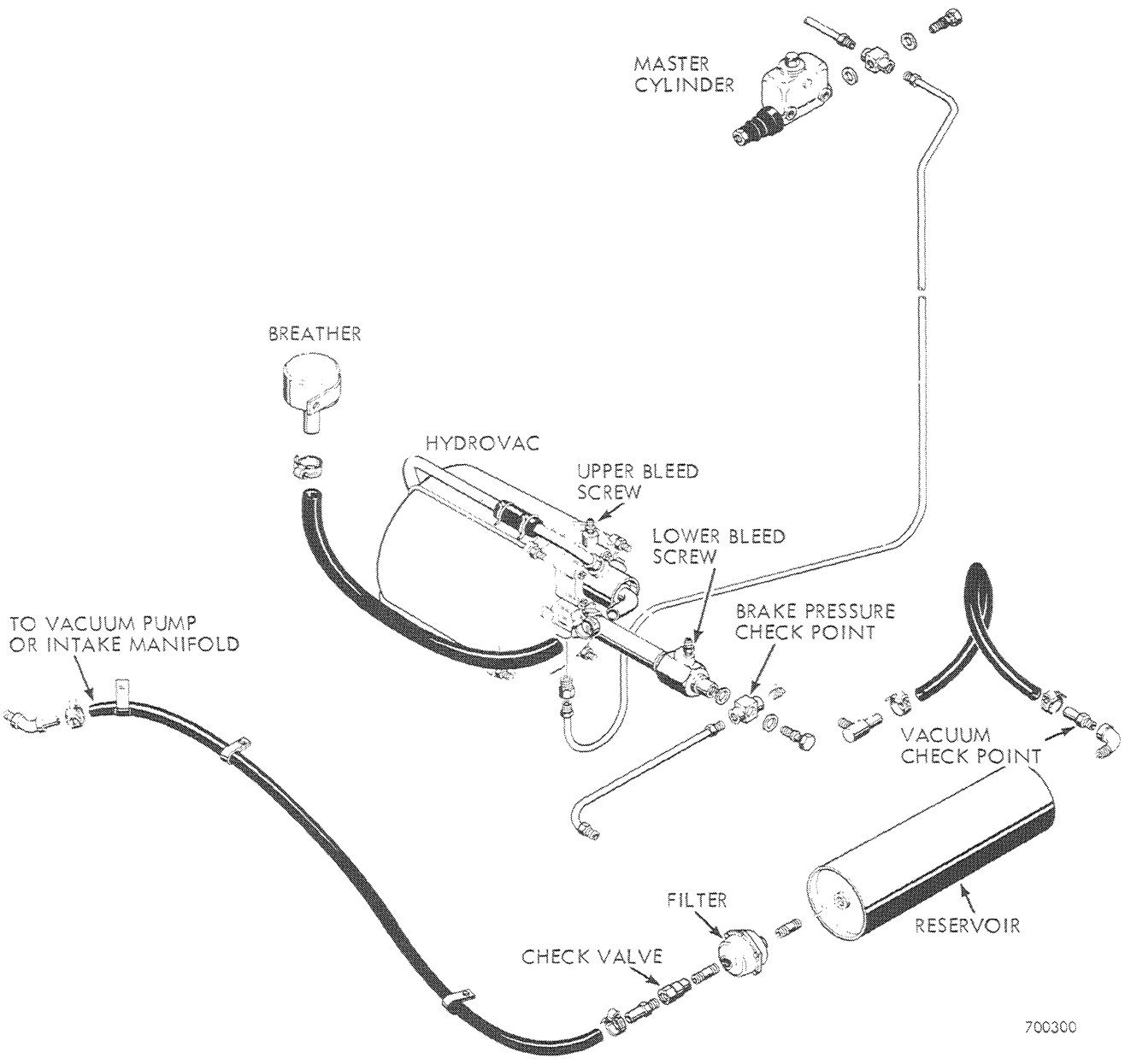
MASTER
CYLINDER
BREATHER
HYDROVAC
UPPER BLEED
SCREW
LOWER BLEED
SCREW
BRAKE PRESSURE
CHECK POINT
TO VACUUM PUMP
OR INTAKE MANIFOLD
VACUUM
CHECK POINT
FILTER
RESERVOIR
CHECK VALVE
700300

Figure 3W-19

PRESSURE CHECKS

(Refer to Figure 3W-20)

Vacuum Power Check

1. With the engine shut off, apply the brake pedal several times to remove all vacuum from the system.

2. Depress the brake pedal and start the engine.

3. If the vacuum system is operating properly, the brake pedal will move downward.

4. If no action is indicated, the vacuum system is not operating correctly. Inspect the system for disconnected or restricted vacuum lines.

Vacuum Check Valve

1. Disconnect the check valve from the filter.

2. Install a vacuum gauge in the check valve opening.

3. Start the engine and run at idle speed for 1 minute. Note the gauge reading.
   a. If the gauge registers less than 16 inches of mercury vacuum, inspect the check valve and line to the engine intake manifold or pump for restriction. Also check opening at intake manifold or pump.
   b. If the engine is the cause of the low vacuum the engine must be serviced.

4. Shut off the engine and check the rate of vacuum drop.
   a. If the rate of vacuum drop is greater than 2 inches of mercury vacuum in 15 seconds, excessive leak past the check valve is indicated.
   b. Service or replace check valve if excessive leakage is indicated.

Vacuum Supply Line and Hydrovac

1. Remove the pipe plug from the hose adapter that screws into the tee at the reservoir.

2. Install a vacuum gauge.

3. With the engine running at idle, the vacuum gauge should register approximately 20 inches of mercury vacuum.

4. Stop the engine and note the rate of vacuum drop. If the rate of vacuum drop is greater than 2 inches of mercury vacuum in 1 minute, excessive air is leaking into the system. Check the complete system for leaks. Tighten all connections. If leakage is still found, the hydrovac is probably at fault and should be removed and repaired.

NOTE

IF THE VACUUM GAUGE READING OF 20 INCHES OF MERCURY VACUUM CANNOT BE OBTAINED, IT WILL BE DIFFICULT TO OBTAIN THE CORRECT HYDRAULIC PRESSURE.

Hydrovac Brake Pressure

After the hydrovac system has been installed on the loader and the correct vacuum obtained, check the hydraulic pressure as follows:

1. Remove the 1/8" plug from the connector at the end of the hydrovac hydraulic cylinder.

2. Install a 2000 pound pressure gauge.

3. Start the engine and apply the brakes - a gauge pressure of approximately 1500 PSI should be obtained. If the pressure gauge reading cannot be obtained, check the complete system for leaks, leaking wheel cylinders, low vacuum, etc.

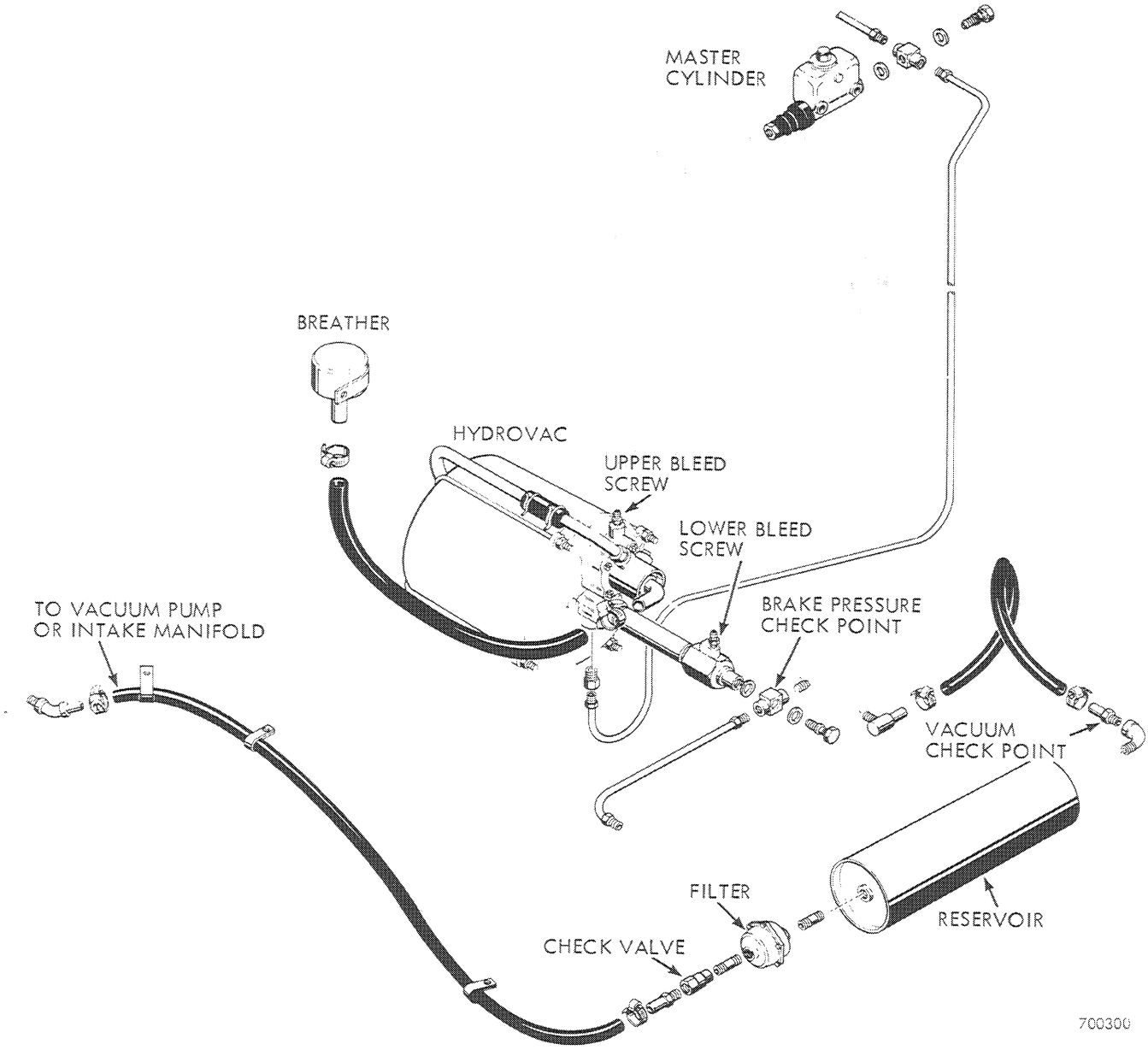

Figure 3W-20

VACUUM PUMP ADJUSTMENTS

When installing the vacuum pump, adjust the return hose elbow at the vacuum pump between horizontal and 30° downward. Adjust the oil supply hose so there is a minimum of 1/4" clearance between the supply hose and the return hose.

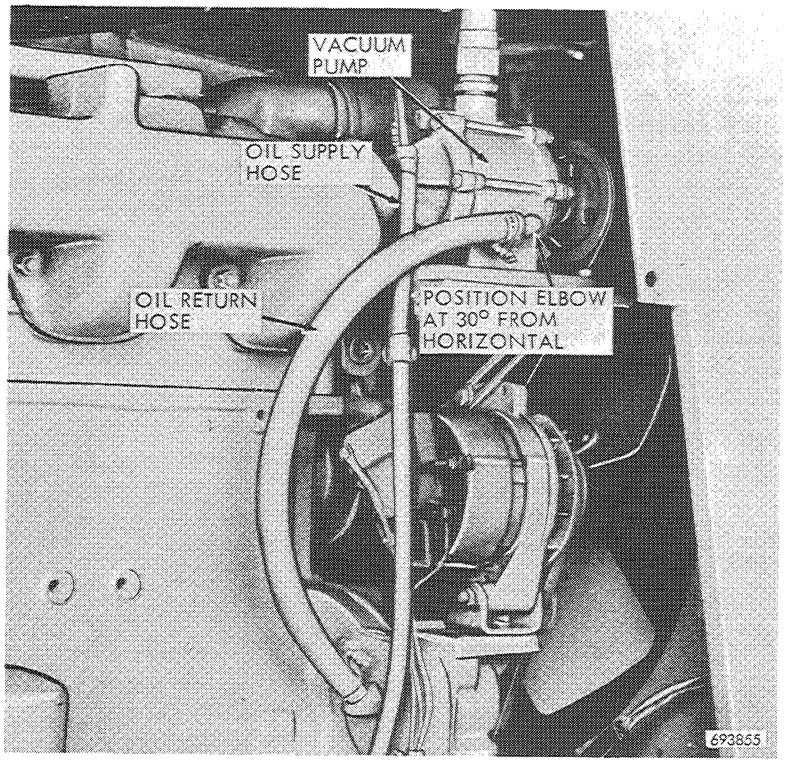

Figure 3W-21

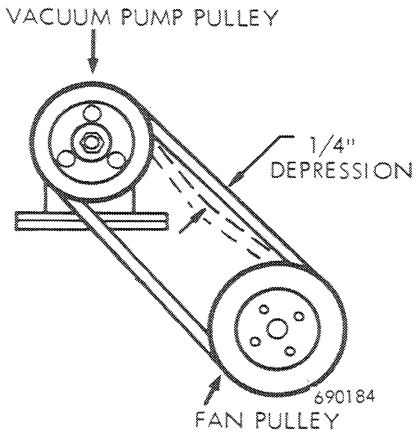

Figure 3W-22

Belt Adjustment

The effectiveness of which the Hydrovac brake system operates depends upon the condition and tension of the belt that drives the vacuum pump and should be checked every 60 hours of operation.

When the belt tension is too tight, the belt will wear and also cause side loading of the vacuum pump shaft causing damage to the pump. When the belt tension is too loose, it will cause belt wear, slippage and reduce the effectiveness of the Hydrovac brake system.

Loosen the mounting bolts and slide the vacuum pump in or out until the belt can be depressed 1/4 inch at a point midway between the pump pulley and fan pulley and tighten nut, refer to Figure 3W-22.

Belt Replacement

The fan and generator drive belts will have to be loosened or removed before the vacuum pump drive belt can be replaced.

Loosen the adjusting nut and move the pump downward until the belt can be taken off the pump pulley, fan pulley and over the fan blades one at a time. Install the new belt and readjust the belt tension to 1/4".

Reinstall and adjust the fan and generator drive belts.

SERVICE SUGGESTIONS

Poor Brakes

CAUSE	REMEDY
1. Damaged check valve	1. Test the check valve as described under "Pressure Checks."
2. Collasped hoses or loose connections.	2. Inspect and replace hoses if necessary. Tighten connections.
3. Leak in reservoir.	3. Inspect reservoir and replace if necessary.
4. Leakage at hydraulic lines or wheel cylinder.	4. Tighten lines. Replace if necessary.
5. Restricted breather.	5. Clean breather and change if necessary.
6. Damaged diaphram.	6. Remove, inspect and replace if necessary.
7. Low brake fluid supply.	7. Fill master cylinder reservoir to within 3/4 inch of filler opening.
8. Brake shoes misadjusted.	8. Refer to Section W or WW, depending upon the type of brake used.

Low Vacuum

CAUSE	REMEDY
1. Excessive vacuum leaks in lines and fittings.	1. Check for loose vacuum fittings throughout system and tighten if necessary.
2. Low pump speed due to belt slippage.	2. Refer to Operator's Manual for adjustment.
3. Excessive clearance in pump.	3. Remove pump and check clearance.
4. Damaged diaphram in the hydrovac.	4. Remove hydrovac assembly and check diaphram.
5. Leak in reservoir.	5. Inspect reservoir and replace if necessary.

External Oil Leakage (Vacuum Pump)

CAUSE	REMEDY
1. Damaged flat rubber gaskets between end plate and housing.	1. Remove pump and replace gaskets.
2. Damaged oil seal in front end plate.	2. Remove and disassemble pump. Polish rotor shaft at oil seal location and install a new oil seal.

External Brake Fluid Leakage

CAUSE	REMEDY
1. Leakage in fittings or lines to hydrovac or wheel brake cylinders.	1. Inspect and tighten all fittings and lines. Replace if damaged.

Internal Brake Fluid Leakage

CAUSE	REMEDY
1. Poor brakes due to leakage at the master cylinder primary cup.	1. Disassemble master cylinder and replace damaged parts.
2. Excessive brake fluid loss, past end plate oil seal - also past control valve piston seals. ***NOTE*** Brake fluid loss past these oil seals, will be drawn directly into the engine causing damage to the engine.	2. Remove hydrovac and replace end plate oil seal or control valve piston seals.
3. Poor brakes due to leakage at the hydrovac hydraulic piston seal or ball.	3. Remove hydrovac and inspect hydraulic piston. Replace if necessary.

Brakes Will Not Release

CAUSE	REMEDY
1. Damaged residual valve.	1. Inspect valve and replace if necessary.
2. Control valve piston binding.	2. Remove hydrovac, inspect and replace piston if necessary.
3. Power piston binding on return stroke.	3. Refer to "Hydrovac Inspection."

SECTION

FF

ELECTRICAL SYSTEM

●

THE ALTERNATOR CHARGING CIRCUIT

ON

CASE WHEEL LOADERS

Rac. Form 9-76331

PRINTED IN U.S.A.

ALTERNATOR CHARGING SYSTEMS
Do's and Don'ts

Precautions to be observed when installing, testing or servicing the alternator.

Alternators are designed and constructed to give long periods of trouble-free service with a minimum amount of maintenance. If trouble is experienced with an alternator, it is desirable to follow a systematic procedure in attempting to locate the source of trouble so that it may be more readily found and corrected. Before attempting on-the-tractor testing, or any maintenance, there are certain precautions that must be observed. The following precautions are applicable to practically all AC charging systems.

1. Avoid reverse battery connections to prevent damage to the diode rectifiers. Battery polarity should be checked with a voltmeter, before connections are made to be sure that connections correspond to the vehicle battery ground polarity.

2. If booster batteries are used for starting they must be connected properly not to damage the diode rectifiers. The negative cable from the booster battery must be connected to the negative terminal of the vehicle battery and the positive booster cable to the positive terminal.

3. When a fast charger is used to charge the battery, cables should be disconnected. The fast charger should never be used as a booster for starting the vehicle. Failure to observe this precaution may result in damage to the diode rectifiers.

4. The field circuit must never be grounded between the alternator and the regulator. Grounding of the field terminal of either the alternator or the regulator will cause damage to the regulator.

5. Grounding of the alternator output terminal will damage the alternator and/or circuit. This is true even when the system is not in operation since, on most systems, no circuit breaker is used and battery voltage is applied to the alternator output terminal at all times.

6. The alternator must not be operated on open circuit with the field winding energized. This would cause alternator voltage to be extremely high and may damage the diode rectifiers.

7. Do not attempt to polarize the alternator. No polarization is required. Any attempt to do so may result in damage to the alternator, regulator, or circuits.

8. Care should be taken when adjusting voltage regulator to prevent a short circuit from occurring between the voltage regulator relay and the regulator base. The tool being used to make the adjustment should be insulated by taping the tool or by installing a plastic sleeve.

9. Care should be taken not to spill oil into the air vents of the alternator when servicing the engine.

10. Always turn the ignition switch off when performing work on the regulator.

    On many AC systems the field circuit is connected to the battery through the ignition switch.

NOTE

With normal operation of alternator, if noise or vibration develops in the alternator, stop engine and immediately check alternator.

CHECKING AND ADJUSTING REGULATOR VOLTAGE OUTPUT

Connect a voltmeter (30 volt capacity) with the positive lead to the cutout Number 1 terminal and the negative lead to the F-2 terminal of the alternator. Connect ammeter to the BAT connection of the alternator and the BAT wire. Refer to Figure FF-1. Turn off all lights.

Operate engine at approximately 1500 RPM (alternator speed of approximately 3000 RPM). The alternator output should be at least 10 amperes less than the rated output.

To adjust voltage remove the pipe plug, Figure FF-2, and turn the slotted adjusting button inside regulator. For an under charged battery, turn toward the plus (+) mark to increase voltage. For an overcharged battery, turn toward minus (—) mark to decrease voltage.

CAUTION Overcharging or undercharging of battery greatly shortens battery life.

NOTE There is a positive stop after two notches in either direction. If this does not correct the condition of the batteries or the voltage is not within limit given in the specifications, replace the regulator.

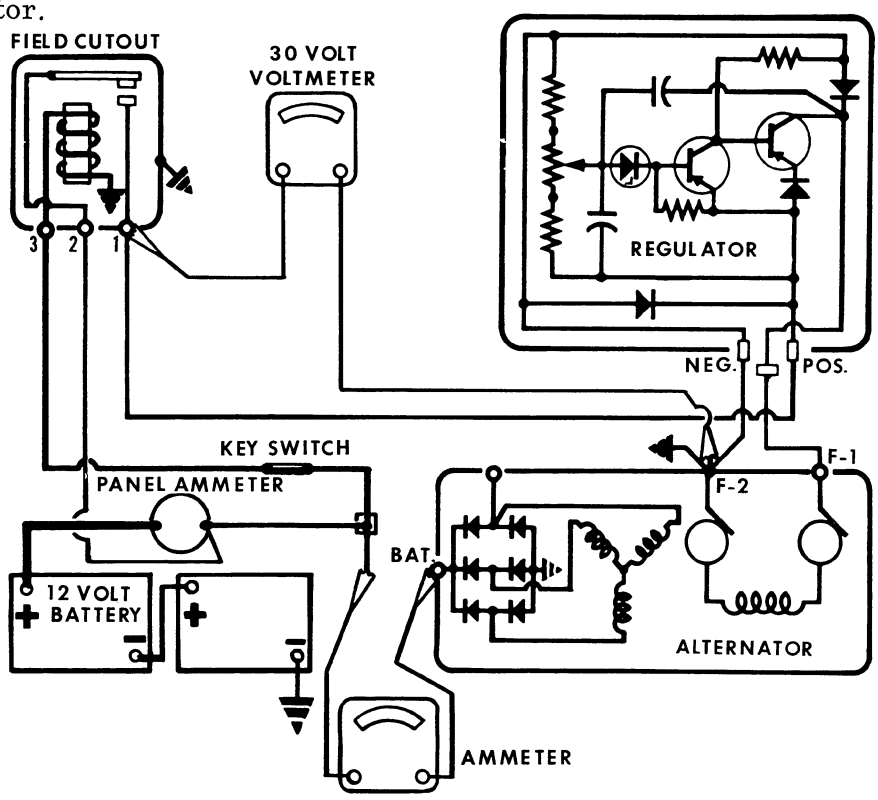

Figure FF-1

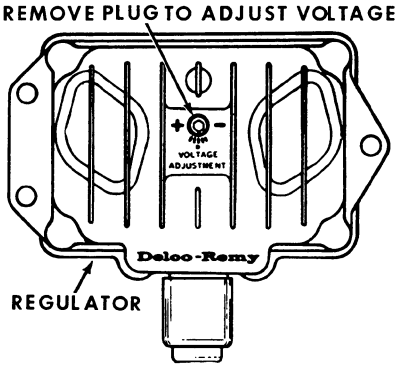

Figure FF-2

DELCO NO.	CASE NO.	VOLTAGE SETTING at 0 adj.
9000591	A55703	27.5 to 28.5
9000590	L10202	13.7 to 14.3

FIELD CONTROL CIRCUIT CHECKS

Step 1

Connect the positive lead of the voltmeter to the positive terminal of the batteries. With a suitable probe connected to the negative lead of the voltmeter touch the positive or red wire terminal at the regulator plug. Refer to Figures FF-3 and FF-4. Turn key switch to on position. Record voltmeter reading, turn key switch to off position.

Step 2

Connect the negative lead of the voltmeter to the ground connection, Figure FF-4, of the alternator. With a suitable probe connected to the positive lead of the voltmeter touch the negative or the black wire terminal at the regulator plug. Refer to Figure FF-3 and FF-4. Turn key switch to run position and record voltmeter reading.

If the two voltmeter readings total more than .3 volts check the wire for loose connections in the charging circuit and also check for faulty key switch. If wires and switch is satisfactory, the field cutout contacts could have high resistance across them and cutout should be replaced.

NOTE An adapter plug and socket assembly can be used for the above tests and can be purchased through the United Motor Service Dealers under Packard Cable No. 2984024 Refer to Figure FF-3 for proper hook up.

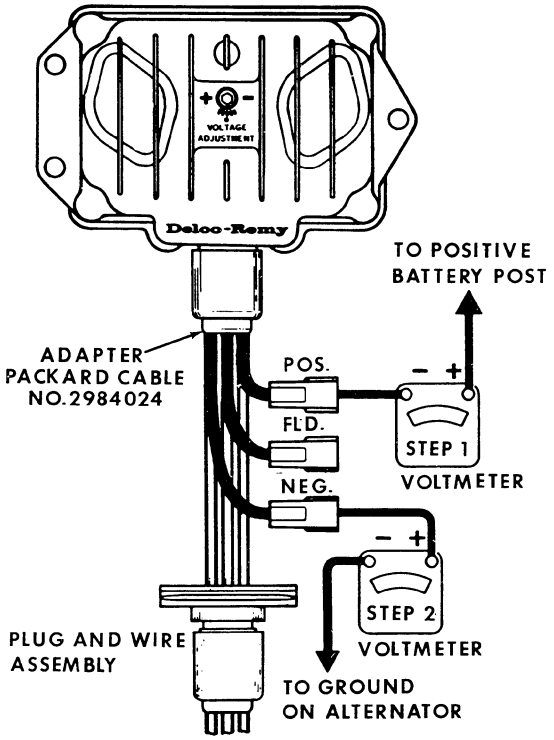

Figure FF-3

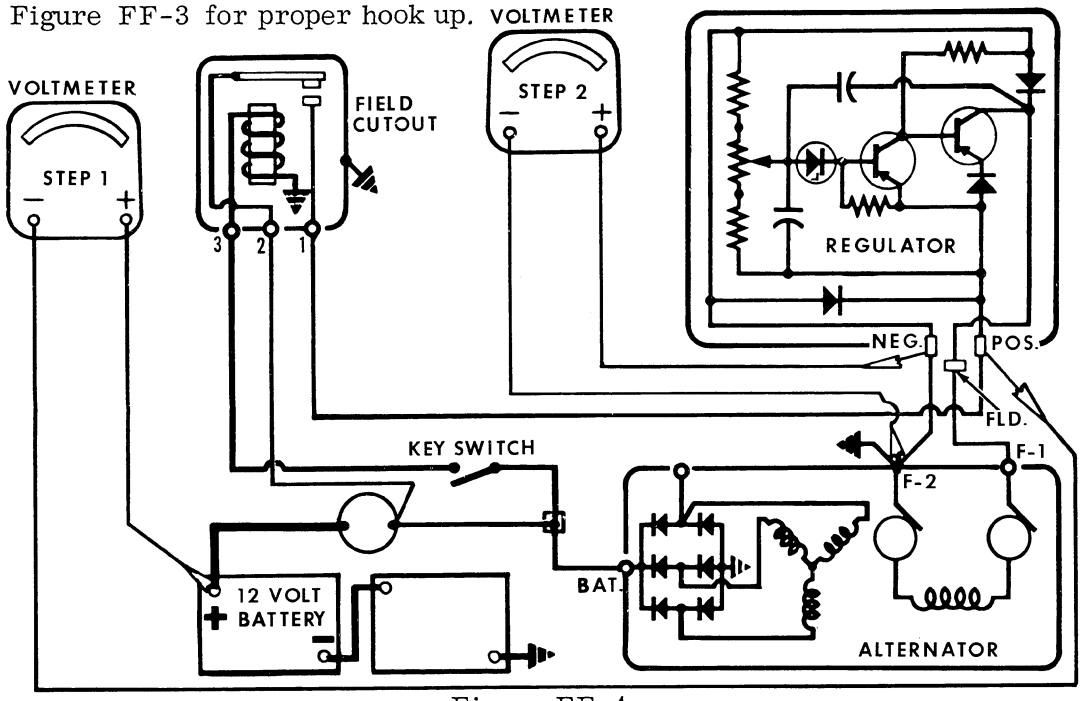

Figure FF-4

ALTERNATOR OUTPUT CHECK

DELCO REMY	CASE NO.	GROUND	FIELD CURRENT (80°F.)		COLD OUTPUT	
			AMPS	VOLTS	VOLTS	AMPS ENGINE RPM
1117772	A56095	Negative	2.4-3	24	28	45 at 2150
1117078	A18436	Negative	2-6.3	12	14	60 at 2150

Make electrical connections per Figures FF-6 or FF-5 without jumper lead. Operate engine at specified speed with regulator in circuit. Apply a load to the batteries (turn on lights or load resistor) if necessary to obtain desired output. Never allow armature (BAT) circuit to open while alternator is turning. Check ammeter, if no output connect jumper lead per Figure FF-5 or FF-6. Check ammeter, if no output and voltmeter reads more then field voltage specified above replace alternator.

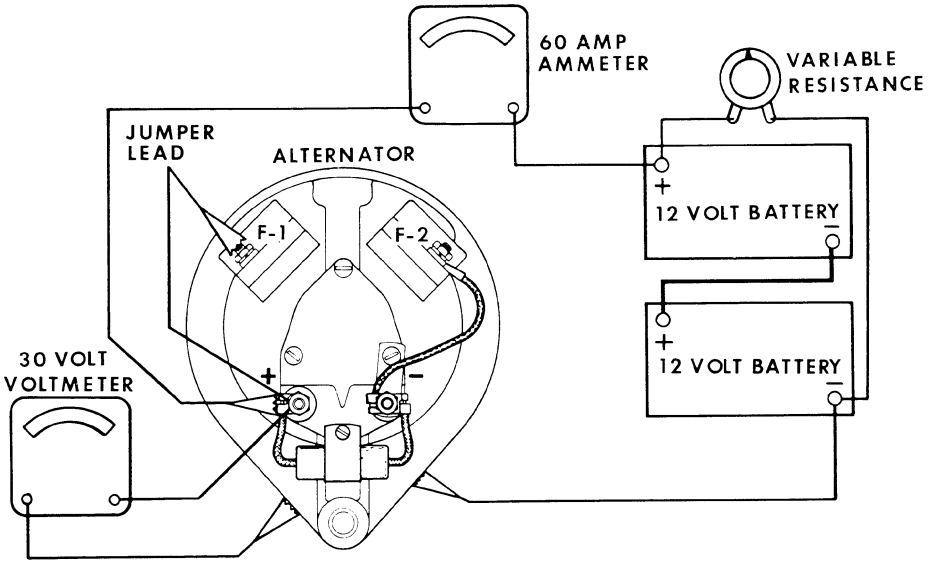

Figure FF-5

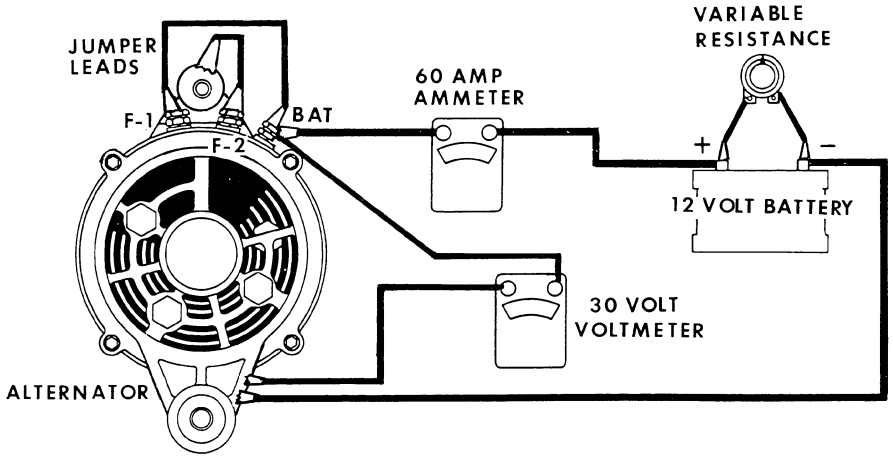

Figure FF-6

ALTERNATOR FIELD CIRCUIT VOLTAGE CHECK

Connect the positive lead from the voltmeter to the field, F-1, (Figures FF-7 or FF-8) terminal of the alternator. Connect the negative lead to the field. Turn the key switch to run position. Voltmeter should read 1 to 2 volts less then battery voltage. If voltmeter reads zero, check circuit continuity from alternator to battery and from field cutout to battery. If circuits check ok replace regulator.

The alternator field continuity check should show about 10 ohms for field resistance.

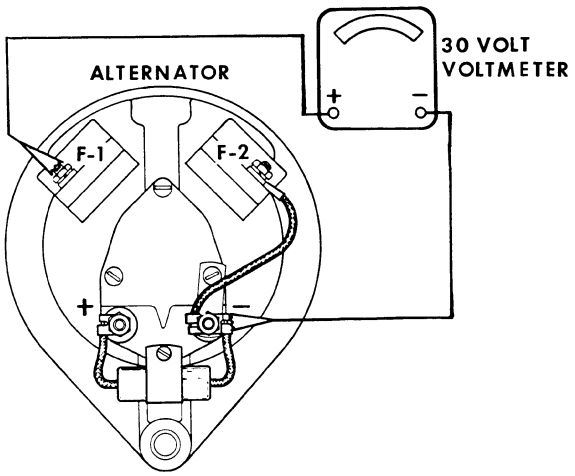

Figure FF-7

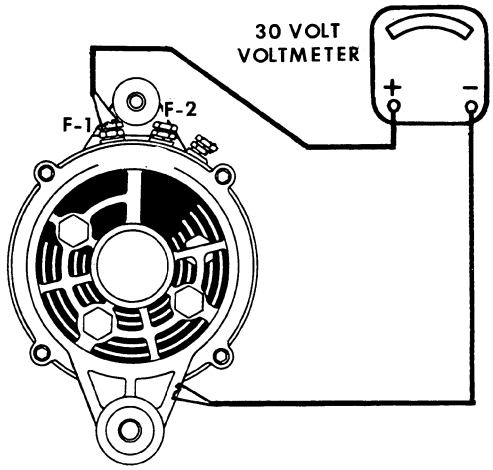

Figure FF-8

ALTERNATOR FIELD CUTOUT CHECK

Connect the positive lead of a 30 volt voltmeter to the number 1 terminal (red wire) of the field cutout. Connect the negative lead to ground. Refer to Figure FF-9. Key switch must be in off position.

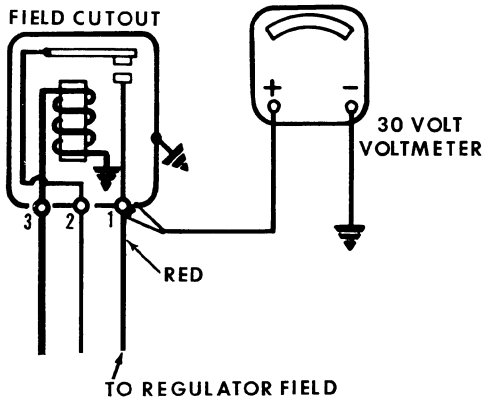

Figure FF-9

If voltmeter reads battery voltage the field contacts are stuck closed (replace cutout).

If voltmeter reads zero turn key switch to run position, voltmeter should read battery voltage. If voltmeter reads zero check for broken leads, high resistance or bad key switch in charging circuit - if they are satisfactory replace the field cutout.

DELCO REMY NO.	CASE NO.	AIR GAP*	POINT OPENING	CLOSING VOLTAGE	OPENING VOLTAGE	SEALING VOLTAGE
1116993	A18431	.011" min.	.030"	15.5-18.5	1.5 min.	22.5 max.
1116895	A18439	.010"	.015-.025	7.9	1.5 min.	11.0 max.

*at core-points closed.

ALTERNATOR BELT ADJUSTMENT

The alternator drive belts should be checked for excessive looseness and wear every 60 hours of operation. The proper belt adjustment will give a deflection of 1/2 of an inch (or 50 to 80 lbs. tension) between the fan and alternator pulley, Figure FF-10. When the tension is too tight, the alternator and water pump bearings and fan belt will wear excessively. When belt tension is too loose it will permit excessive belt wear and slippage, also low or no alternator output.

The most accurate method of checking belt tension is with a Belt Tension Gauge, Figure FF-10.

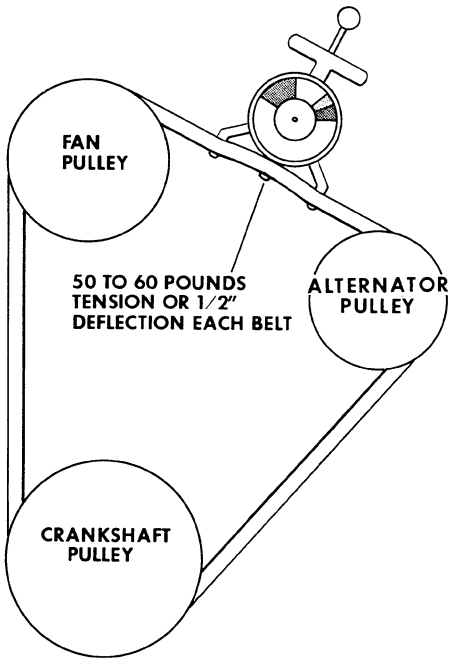

Figure FF-10

IMPORTANT SAFETY PRECAUTIONS THAT MUST ALWAYS BE OBSERVED WHEN WORKING AROUND ELECTRICAL SYSTEMS

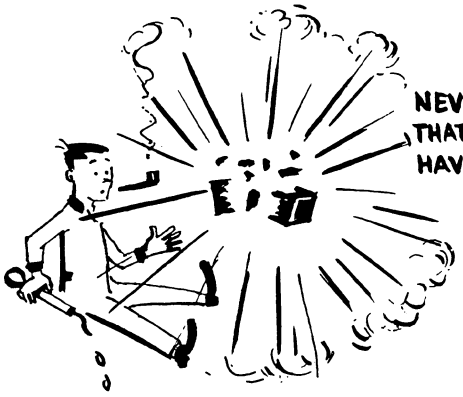

NEVER SMOKE NEAR BATTERIES THAT ARE BEING CHARGED OR HAVE RECENTLY BEEN CHARGED

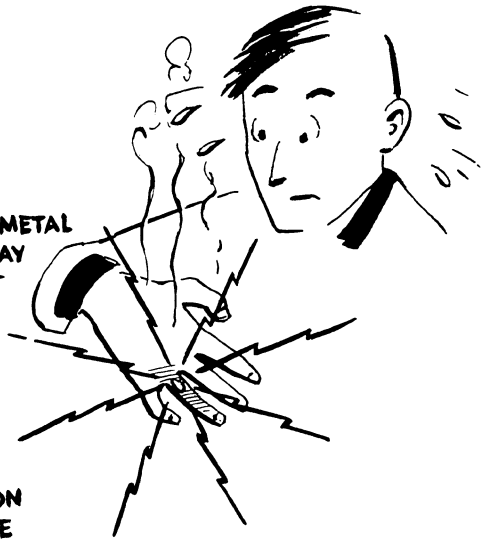

NEVER WEAR RINGS OR METAL WATCH BANDS AS YOU MAY GROUND A LIVE CIRCUIT



THINK OUT YOUR CIRCUIT BEFORE YOU MAKE OR BREAK A CONNECTION AS A WRONG CONNECTION CAN BE PAINFUL AND EXPENSIVE.

NOTE: CASE CORPORATION **reserves the right to make improvements in design or changes in specifications at any time without incurring any obligation to install them on units previously sold.**

SECTION

3F

ELECTRICAL SYSTEM

THE CHARGING CIRCUIT

●

THE CRANKING CIRCUIT

●

IGNITION SYSTEM

PRINTED IN U.S.A.

TABLE OF CONTENTS

INTRODUCTION 3F-3

BATTERY . . . . . 3F-3 thru 3F-5

Visual Inspection 3F-3

Specific Gravity Check 3F-4

Individual Battery Cell Check 3F-5

Cranking Voltage Test 3F-5

Battery Bench Load Test 3F-5

REGULATORS . . . . . 3F-6 and 3F-7

Specifications 3F-6

Test Hook Ups 3F-7

GENERATORS . . . . . 3F-8 and 3F-9

Specifications and Belt Adjustment 3F-8

Out-Put Check Hook-Up 3F-9

CRANKING MOTOR SWITCHES AND SOLENOIDS . . . . . 3F-10 and 3F-11

Specifications 3F-10

Test Hook Up . . . . . 3F-10 and 3F-11

CRANKING MOTORS 3F-11

Specifications 3F-11

Test Hook Up 3F-11

IGNITION SYSTEMS . . . . . 3F-12 thru 3F-19

Distributors . . . . . 3F-12 and 3F-13

Ignition Coils 3F-13

Static Timing 3F-14

Contact Points . . . . . 3F-15 thru 3F-17

Coil Polarity and Resistors . . . . . 3F-18 and 3F-19

SPARK PLUGS . . . . . 3F-20 thru 3F-23

INSTRUMENT PANEL RESISTORS 3F-24

DRY TYPE AIR CLEANER CONDITION INDICATORS . . . . . 3F-25 and 3F-26

Vacuum only type 3F-25

Vacuum Electric Type . . . . . 3F-25 and 3F-26

INTRODUCTION

Section F contains the specifications and wiring diagrams necessary to diagnose and make minor adjustments on the electrical components on the Case Wheel Loaders.

All major adjustments and overhaul of electrical components should be performed by an Authorized Electrical Service Station (Delco-United Motors, Prestolite or Auto-Lite Service Stations) where specialized equipment and trained personnel are available.

DO NOT ATTEMPT EVEN MINOR ELECTRICAL ADJUSTMENTS WITHOUT THE AID OF PROPER TEST EQUIPMENT

BATTERY SERVICE AND INSPECTION

IMPORTANT Working with storage batteries all exposed metal surfaces are"live". Never lay a metal object on top of a battery as a short circuit may result. Sparks or open flame must be kept away from batteries due to the presence of explosive gas in and around the batteries while they are being charged or in use.

The sulfuric acid or electrolyte present in a battery is very harmful to your eyes, skin and clothing. If contact is made with it, wash it with a weak solution or baking soda and water. This will neutralize the acid.

Visual Inspection

Check the battery terminals and cables for dirty or corroded conditions which will cause high resistance, resulting in undercharged batteries and very poor cranking speed.

The battery tray, holdown terminals and cable ends must be cleaned when contaminated with baking soda and water. This will help to prevent self discharge of batteries. After cleaning and drying a thin coating of vasoline, light cup grease or paint will help prevent contamination.

A cracked or leaking battery case will let the electrolyte leak out and cause damage to the equipment, a battery in this condition should be replaced. When just the top sealing compound is leaking the battery can be re-sealed.

Vent holes in the filler caps should always be kept open to let the battery gases escape. Never remove battery caps except to add water.

The electrolyte level should be checked each week. Never let the level drop to a point where the plates are exposed. Pure or distilled water should be added when the electrolyte level is low. DO NOT OVERFILL, refer to Figure 3F-1.

Normal water consumption would be approximately 1 oz. every 60 hours of operation. If it is greater, either the case is leaking or regulator is or overcharging and must be adjusted.

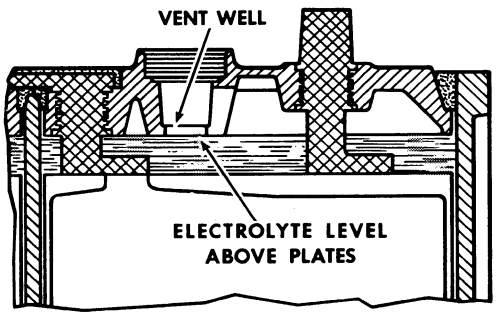

Figure 3F-1

Specific Gravity Check

The most reliable way to determine the concentration of sulfuric acid in the electrolyte is to measure the relative weight or specific gravity of the solution. A hydrometer is used for this, and only enough solution is removed from a battery cell so the float is suspended freely and not touching the top, bottom or sides of the glass tube, Figure 3F-2. Always hold the hydrometer at eye level and in vertical position when taking a reading. A hydrometer reading is only correct when the temperature of the solution is 80°F.

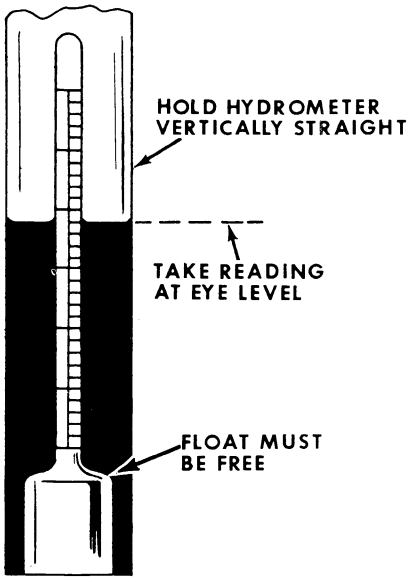

NOTE Most hydrometers have a calibrated thermometer to correct this.

When it is above or below this reading, it has to be corrected either by adding .004 gravity points for every 10° above 80° F. or subtracting .004 gravity points for every 10° below 80° F., Figure 3F-2.

When the specific gravity readings between the cells show a variation of .025, the battery should be replaced.

Specific gravity readings will change depending upon climate.

State of Charge	Specific Gravity Range for Climate Zone		
	Frigid	Temperate	Tropical
100%	1.280	1.260	1.225
75%	1.230	1.215	1.180
50%	1.180	1.170	1.135
Discharged	1.080	1.070	1.045

The battery should never be allowed to drop below 75% charge while not in use.

When a battery is to be charged, it may be charged at any rate which does not allow the battery terminal voltage to exceed 15.5 volts (12 volt battery) 7.8 volts (6 volt battery) while charging. The battery temperature should never exceed 110° F. while charging if it does reduce charging rate.

The charger should be left on until the specific gravity readings stay the same after three checks of an hour apart.

A fast charge method is used only to give the batteries a boost for starting. This type of charge puts out a very high amperage until the battery temperature is up to 110°F., then it shuts off.

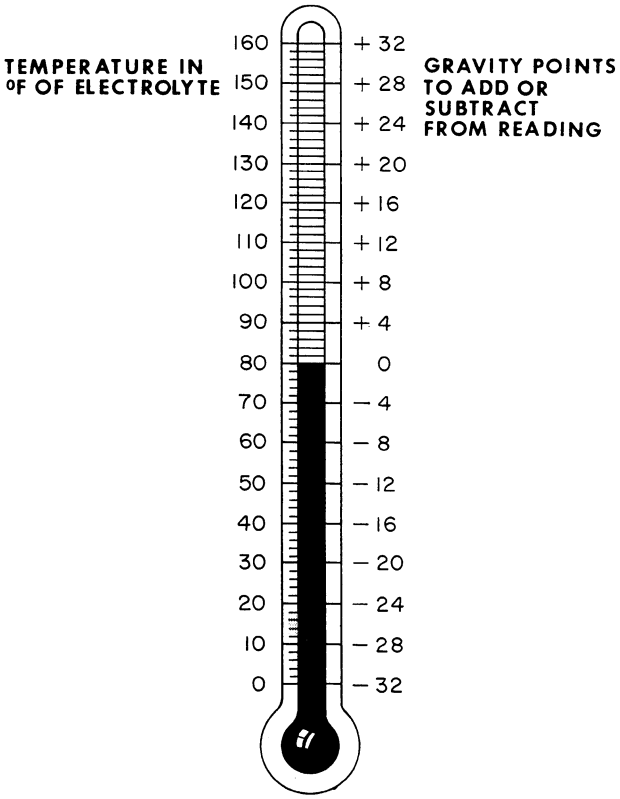

Figure 3F-2

Individual Battery Cell Check

Place a light load on the battery by cranking engine (do not start engine) for 3 seconds. Turn on headlights, after one minute proceed with check. Using a 4 volt voltmeter check the voltage of each cell, refer to Figure 3F-3

If cell voltage varies more than .05 volts replace battery. If cell voltage is below 1.95 volts, charge battery and recheck the cell voltages. If cell voltage is still below 1.95 volts or varies .05 volts replace battery.

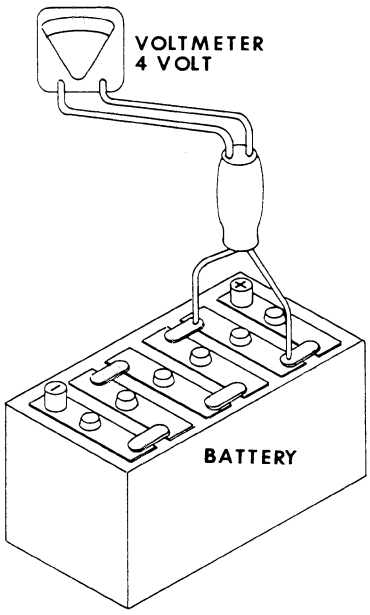

Figure 3F-3

Battery Cranking Voltage Test

To perform the cranking voltage check:

NOTE On Spark ignition engines remove the center coil wire to prevent engine from starting. On Diesel engines move the throttle control to the off position or pull the fuel stop lever to off position (if equipped) to prevent the engine from starting.

1. Connect a volt meter (12 volt) between the positive and negative terminals of the batteries, Figure 3F-4.

   Crank the engine for 15 seconds and record voltage.

2. Connect voltmeter (12 volt) between the cranking motor terminal and ground on cranking motor, Figure 3F-4.

   Crank the engine and record voltage. If voltage is not the same or varies more than .5 volt, check the battery cables, clean and tighten connections.

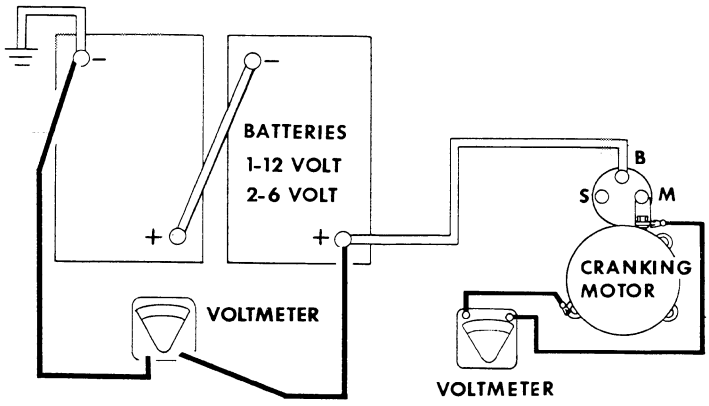

Figure 3F-4

Battery Bench Load Test

With batteries removed, connect a volt meter (12 volt) between the negative and positive post, Figure 3F-5.

A load of 270 amps. (12 volt battery) or 300 amp (6 volt battery) is connected between the positive and negative posts and after 15 seconds, check the volt meter reading.

If it is less than 4.5 volts (6 volt battery) 9.5 volts (12 volt battery) the battery should be replaced.

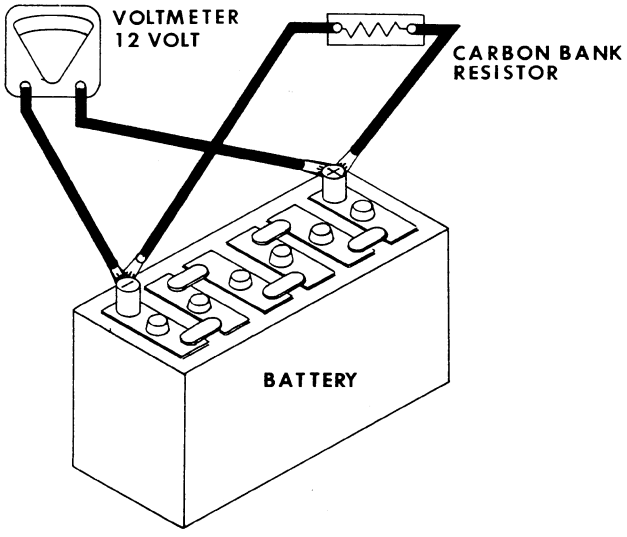

Figure 3F-5

REGULATORS

The voltage regulators are temperature compensated to produce a higher output voltage when cold and a lower output voltage when hot. This helps prevent the batteries from becoming over or under charged.

The ambient temperature is taken with a thermometer fastened to the regulator cover as seen in Figure 3F-6.

Ambient Temperatures

Degrees Fahrehheit (Under Hood Temp.)	12 Volt Reg. Normal Voltage Range	24 Volt Reg. Normal Voltage Range
165°	13.2 - 14.2	26.3 - 28.3
155°	13.35 - 14.35	26.6 - 28.6
145°	13.5 - 14.5	26.9 - 28.9
135°	13.65 - 14.65	27.2 - 29.2
125°	13.8 - 14.8	27.5 - 29.5
115°	13.95 - 14.95	27.8 - 29.8
105°	14.1 - 15.1	28.1 - 30.1
95°	14.25 - 15.25	28.4 - 30.4
85°	14.3 - 15.3	28.5 - 30.5
75°	14.45 - 15.45	28.8 - 30.8
65°	14.6 - 15.6	29.1 - 31.1
55°	14.75 - 15.75	29.4 - 31.4
45°	14.9 15.9	29.7 - 31.7
35°	15.05 - 16.05	30.0 - 32.0
25°	15.2 - 16.2	30.3 - 32.3

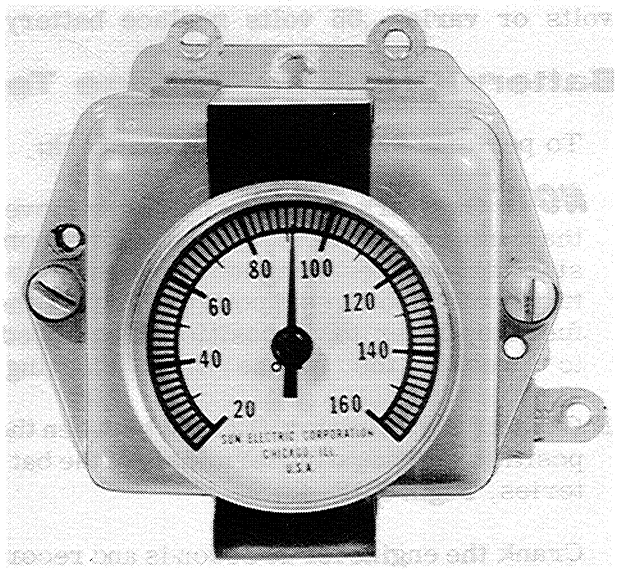

Figure 3F-6. Checking Ambient Temperature

Regulator Specifications at 110° F

Delco No.	CUTOUT RELAY			VOLTAGE REGULATOR			CURRENT REG.	
	AIR GAP	POINT GAP	CLOSE Volt Adj.	AIR GAP	Voltage Adjust To. Volts	Eng. RPM	AIR GAP	ADJUST AMPS TO
1118991	.020"	.020"	12.8	.075"	14	1175		
1119213	.017"	.032"	24-27	.075"	28.5	1000	.075"	8.5-11.5
Auto-Lite								
VRT-4104A	.031"-.034"	.015"	12.6-13.3	.048"-.052"	14.2	1080		
VBP-5201B	.025"-.027"	.015"	12.5-13.5	.048"-.052"	14.5	1080		
Prestolite								
VBX-4221B	.024"-.028"		12.5-13.5	.048"-.052"	14.0			
VBW-5201C	.024"-.028"	.015"	12.5-13.5	.048"-.052"	14.0			
VBX-6221B	.024"-.028"		12.5-13.5	.048"-.052"	14.0			

Refer to Page 3F-7 For Voltmeter and Ammeter Hook Up

Regulator Check Hook Ups

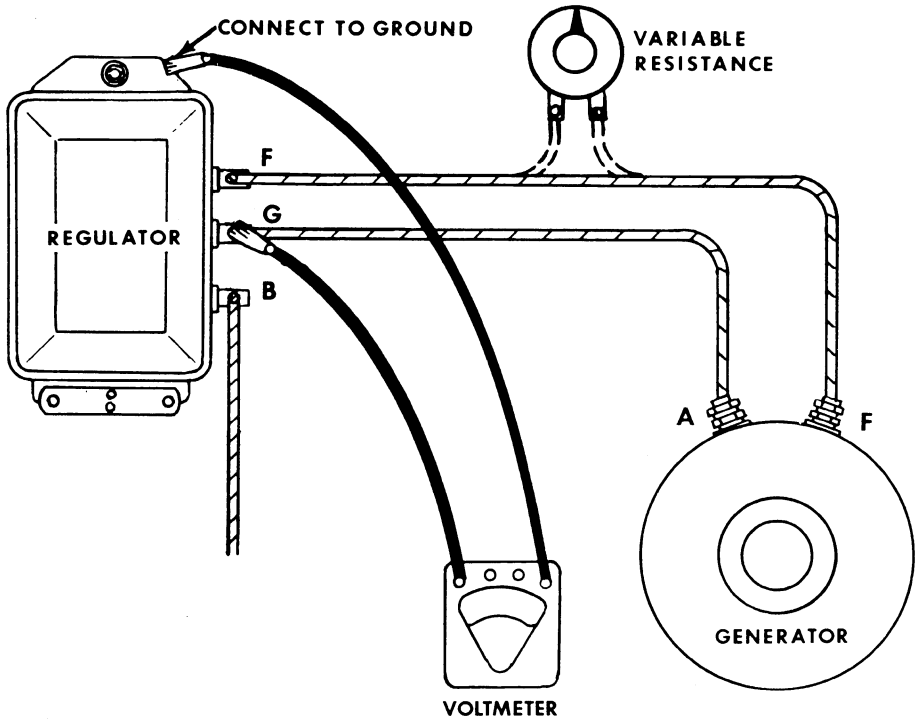

Figure 3F-7. Voltmeter "Hook Up" for Checking Closing Voltage of Regulator Cut-Out, Voltage Setting (Variable Resistance Method)

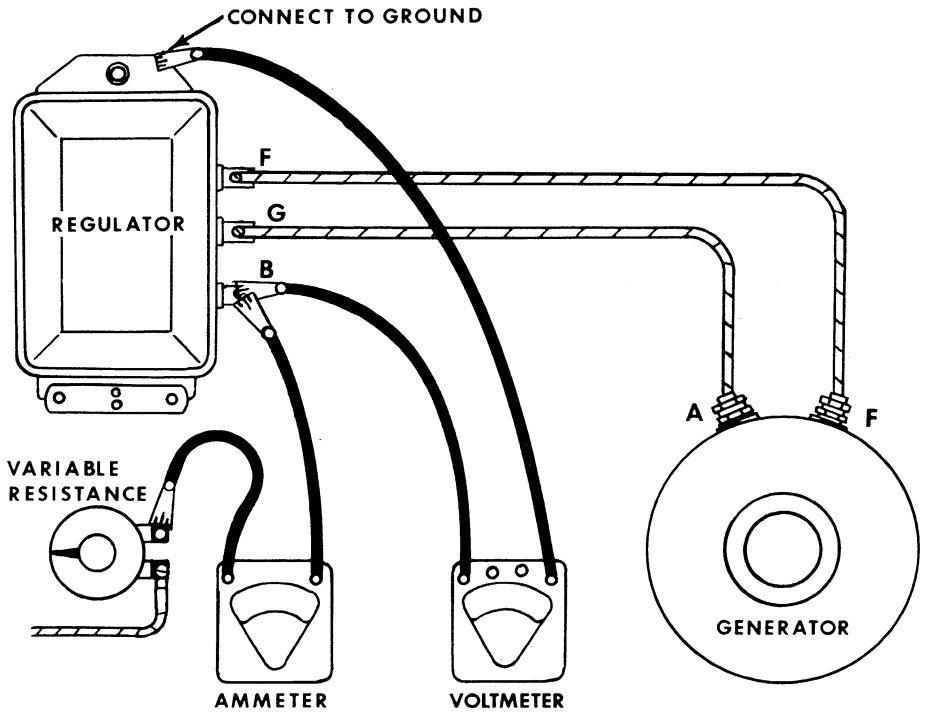

Figure 3F-8. Voltmeter, Ammeter and Variable Resistance "Hook Up" for checking Voltage Regulator Out-Put Voltage and Amperage

GENERATORS

To obtain maximum service life, a regular generator inspection and maintenance procedure should be followed. Proper lubrication, inspection of the brushes and commutator, checking brush spring tension are essentials. Proper belt tension is very important.

Lubrication

The generators that are supplied with oil cups should be lubricated with 6 to 8 drops of medium engine oil every 60 hours of operation.

Never lubricate a generator while it is in operation as it will only result in overlubrication.

CAUTION

DO NOT OVER LUBRICATE GENERATOR

Excess lubrication can only cause difficulty. Excessive oil forces its way out on to the commutator. Such a condition results in reduced or no generator output and increased commutator and brush wear.

Specifications at 90° F

DELCO NO.	CASE NO.	BRUSH MIN. TENSION OZ.	FIELD AMPS	FIELD VOLTS	OUTPUT AMPS	OUTPUT VOLTS	ENG. RPM	GEN. RPM
1100369	A20632	28	1.58-1.67	12	20	14	1150	2300
1100382	A21533	28	1.58-1.67	12	20	14	1185	2300
1100390	A21533	28	1.58-1.67	12	20	14	1185	2300
1100407	A22684	28	1.58-1.67	12	20	14	1185	2300
1100444	A33983	28	1.58-1.67	12	25	14	1560	3040
1105207	A21125	16	.94-1.02	24	10	28.5	1080	1660
1105220	A22682	16	.94-1.02	24	10	28.5	1080	1660
AUTO-LITE NO.								
GHH6001-J	010947AB	26-46	1.6 - 1.7	10	14.7	15	1150	2300
Presto-Lite								
GKJ7303SN	A40569	18-36	1.22-1.28	10	10	15		1500

Belt Adjustment

The generator drive belts should be checked for excessive looseness and wear every 60 hours of operation. The proper belt adjustment will give a deflection of 1/2 of an inch (or 50 to 60 pounds) between the fan and generator pulley, Figure 3F-9. When the tension is too tight, the generator and water pump bearings and fan belt will wear excessively. When belt tension is too loose it will permit excessive belt wear and slippage - also low or no generator output.

The most accurate method of checking belt tension is with a Belt Tension Gauge, Figure 3F-9.

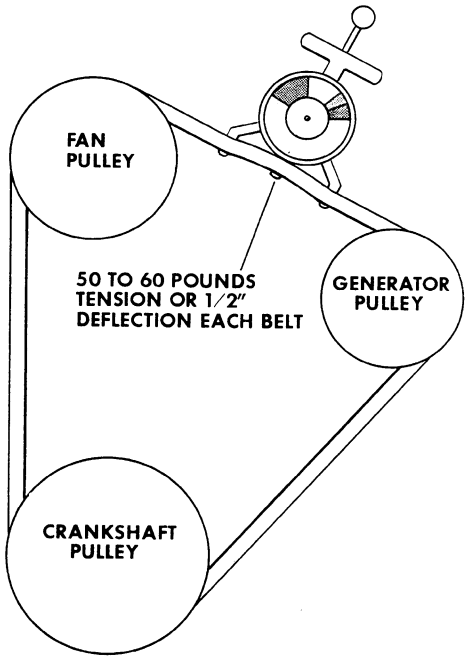

Figure 3F-9

Generator Output Check Hook Up

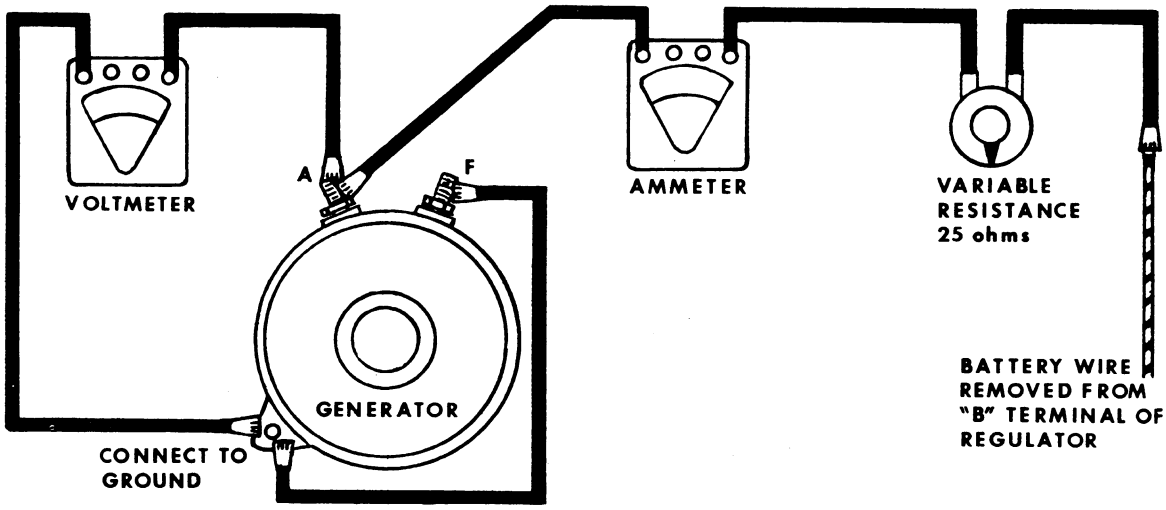

NOTE Load should be a resistance of 25 ohms

Figure 3F-10. Hook Up For Generator Output Check
Disconnect Field and Armature Wire from Generator and Battery wire from Regulator

IMPORTANT SAFETY PRECAUTIONS THAT MUST ALWAYS BE OBSERVED WHEN WORKING AROUND ELECTRICAL SYSTEMS

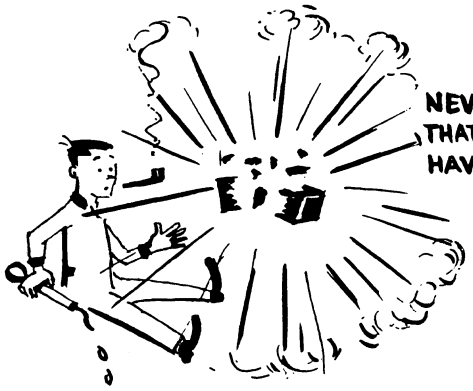

NEVER SMOKE NEAR BATTERIES THAT ARE BEING CHARGED OR HAVE RECENTLY BEEN CHARGED

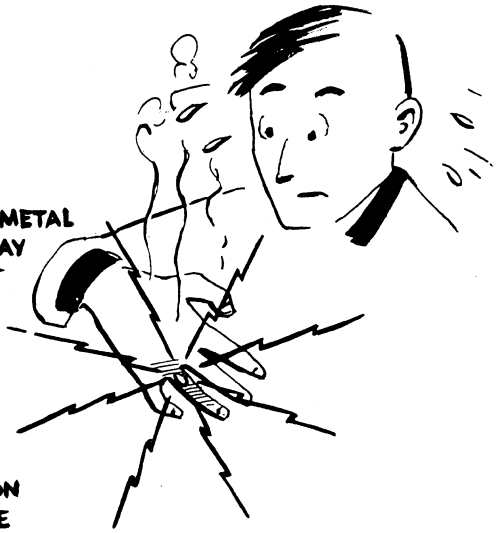

NEVER WEAR RINGS OR METAL WATCH BANDS AS YOU MAY GROUND A LIVE CIRCUIT



THINK OUT YOUR CIRCUIT BEFORE YOU MAKE OR BREAK A CONNECTION AS A WRONG CONNECTION CAN BE PAINFUL AND EXPENSIVE.

CRANKING MOTOR SWITCHES

Introduction

Two types of starting motor switches have been used on Case engines - the Magnetic Switch and the Solenoid Switch.

Magnetic Switch Specifications

*Room Temperature (80°F.)

DELCO-REMY	CASE NO.	AMPERAGE DRAW*	CLOSING VOLTAGE
DR-1467	A20797	2.1 - 2.3	8
AUTO-LITE - PRESTO-LITE NO.			
WSM-4101A	09867AB	6.2 - 7.0	5
SAE-4005	A20145	2.7 - 3.0	6 - 8
SAE-4006	A20145	2.7 - 3.0	6 - 8
SAW-4201	A20145	2.7 - 3.0	6 - 8
SAW-4214	A40795	2.7 - 3.0	6 - 8

Magnetic Switch Check Hook Up

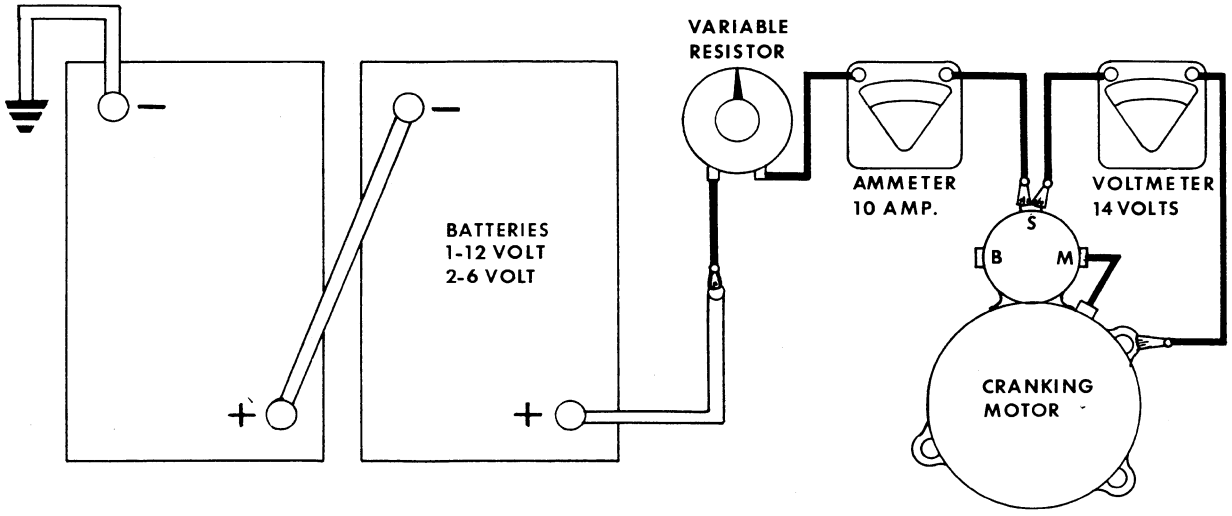

Figure 3F-11. "Hook Up" For Magnetic Switch Tests

Solenoid Switch Specifications

DELCO-REMY NO.	CASE NO.	AMPERAGE DRAW-BOTH WINDINGS	AMPERAGE DRAW HOLD-IN WINDINGS	HOLD-IN WINDING VOLTS
1114252	A21585	47 - 54	15.5 - 17.5	10
1119833	A20793	70.5 - 77.8	18 - 20	10
1119877	A23564	70.4 - 77.8	18 - 20	10
1119832	A15358	46.1 - 52.3	6.1 - 6.8	20
1119853	A15358	65.3 - 73.3	12.7 - 14.3	10
1119890	A23564	70.5 - 77.8	18 - 20	10

Solenoid Switch Check Hook Up

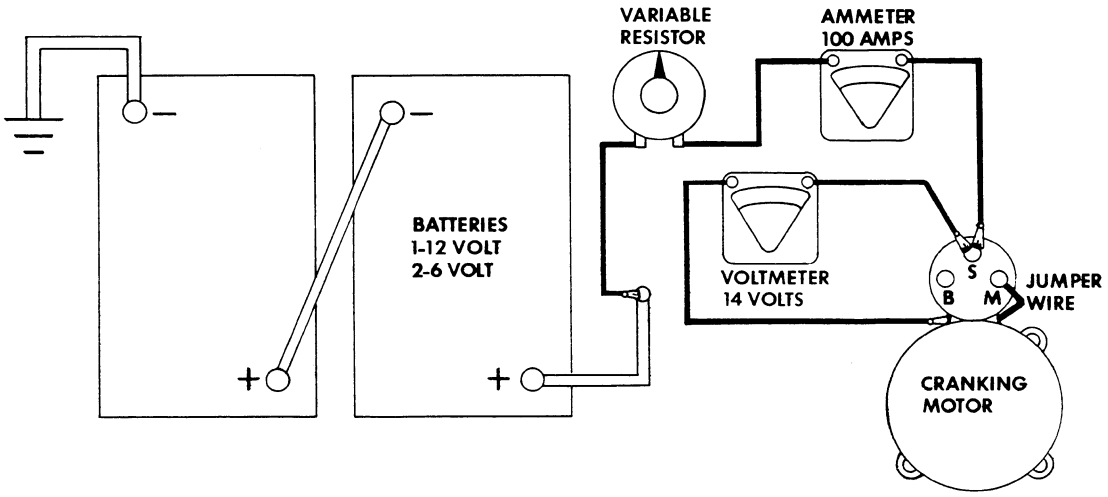

Figure 3F-12. "Hook Up" For Solenoid Switch Tests

CRANKING MOTOR

Both Auto-Lite and Delco Remy Cranking Motors have been used on Case Engines - Because of the many different types used, the test specifications listed below are listed according to the manufacturers number listed on the name plate on each cranking motor.

Specifications at 90° F

DELCO-REMY NO.	CASE NO.	BRUSH TENSION (OZ.)	NO LOAD TEST			TORQUE TEST			
			VOLTS	MAX. AMPS	MIN. RPM	MIN. TORQUE FT. LBS.	VOLTS	MIN. AMPS	MAX. AMPS
1107771	A20873	35	10.6	120*	3900		2	290*	370*
1107877	A20873	35	10.6	120*	3900		2	290*	370*
1113634	A21281	80	11.6	95	8000	20	2.2		600
1113111	A20633	80	11.5	70*	5000	22	3.3		500
1107750	A20623	35	10.3	90	3800	7	5.8		435
1113353	A20751	80	23.5	75*	7000	26	4		500
1113370	A15485	80	23.5	75*	7000	26	4		500
1113631	A13913	80	11.6	95	8000	20	2.2		600
			*INCLUDES SOLENOID SWITCH						
AUTO-LITE NO.	CASE NO.								
MCK-4005	A7338	52-65	10	130	4700	33	4		1300
MDL-6015	A20035	31-47	10	60	3200	6	4		225

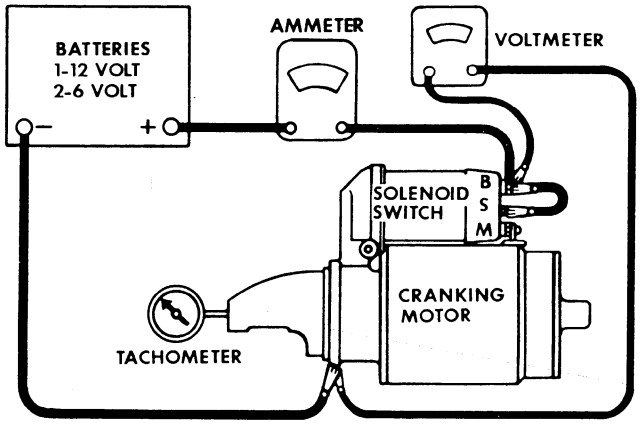

Figure 3F-13. "Hook Up" Cranking Motor No Load Test

IGNITION SYSTEMS

General

The four types of ignition systems used on Case Engines are:

1. The Auto-Lite System used an Auto-Lite Distributor and 12 volt Auto-Lite Coil with a 12 volt Battery System.

2. Wico - Auto-Lite uses a Wico Distributor and a 12 Volt Auto-Lite Coil with a 12 volt Battery System.

3. The Wico Resistorized System uses a Wico Distributor, 6 volt Wico Coil and a 12 to 6 volt Wico ballast resistor with a 12 volt Battery System.

4. The Prestolite Resistorized System uses a Prestolite Distributor, 12 volt Prestolite Coil and a 12 to 6 volt Prestolite ballast resistor with a 12 volt Battery System.

CAUTION

The individual components of the four types of systems described about should not be interchanged with each other as life of the ignition system will be drastically reduced.

DISTRIBUTORS

Introduction

The distributor is basically a high speed switch which delivers current to each spark plug at exactly the right time to fire the fuel air mixture. Any time there is any variation in the delivery of this current to the cylinders it will result in a rough running engine, lack of power and poor fuel economy.

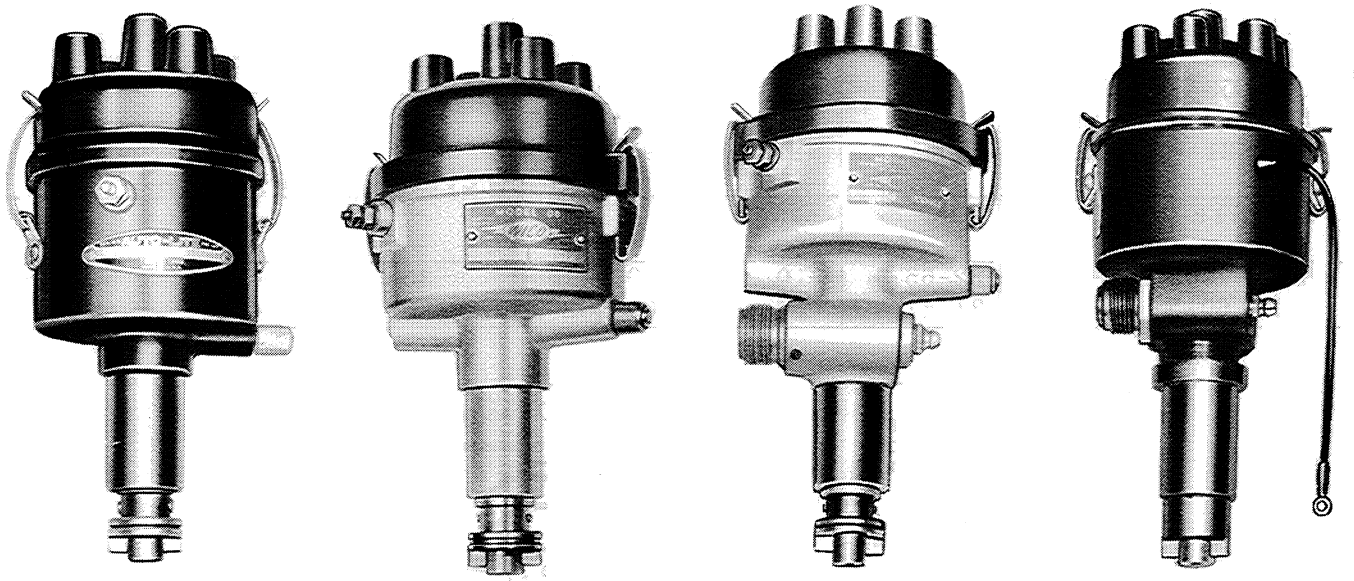

AUTO-LITE **WICO** **WICO** **PRESTO LITE**

Figure 3F-14

The distributor should always be thoroughly visually inspected and tested with a distributor tester any time the engine is tuned up or any work is done on the distributor.

The distributor is the most vital unit in the ignition system and engine performance can not be satisfactory if the distributor is not properly serviced.

This part of Section F covers the Inspection and Servicing of Distributor Parts that are commonly serviced in the average Service Shop and require only the Standard Ignition Service Tools; these parts are namely: Distributor, Rotor, Condenser and Contact Set.

The other parts contained in the distributor are usually serviced by an Authorized Electrical Service Station because of the specialized personnel and tools required.

Before making extensive repairs on the distributor it is advisable to contact an Authorized Service Station and prepare an estimate of the cost of labor and parts necessary to service the distributor. Compare this cost with the cost of a new distributor. In many cases, the installation of a new distributor may be more economical.

Distributor Specifications

WICO NUMBER	CASE NUMBER	CONDENSER CAPACITY MFD.	BREAKER ARM SPRING TEN.OZ.	(DWELL) CAM ANGLE	CONTACT POINT GAP
X30269	A22846	.18 - .26	20 - 28	45°	.020"
X30169	A20639	.30 - .34	20 - 28	45°	.020"
X30234	A20910	.18 - .23	20 - 28	45°	.020"
AUTO-LITE NUMBER					
IAD-6003-1B	A7620	.23 - .26	17 - 20	42°	.020"
PRESTO-LITE NUMBER					
IBT-6403	A24505	.18 - .23	17 - 22	39°	.017" - .022"
IBT-4402	A24508	.18 - .23	17 - 22	70°	.017" - .022"

Firing Order 6 cyl. 1-5-3-6-2-4 4 cyl. 1-3-4-2 CLOCKWISE ROTATION

Distributor Spark Advance Specifications

WICO NUMBER	CASE NUMBER	Distributor Advance at Specified Distributor RPM			
X30269	A22846	0° at 275 RPM	1° at 300 RPM	9° at 500 RPM	17° at 1000 RPM
X30169	A20639	0° at 275 RPM	1° at 300 RPM	10° at 500 RPM	14° at 1000 RPM
X30234	A20910	0° at 275 RPM	1° at 300 RPM	9° at 500 RPM	17° at 1000 RPM
AUTO-LITE NUMBER					
IAD-6003-1B	A7620	0° at 275 RPM	1° at 300 RPM	12° at 650 RPM	13° at 675 RPM
PRESTO-LITE					
IBT-6403	A24505	0° at 275 RPM	1° at 300 RPM	10° at 500 RPM	12° at 750 RPM
IBT-4402	A24508	0° at 275 RPM	1° at 300 RPM	10° at 500 RPM	17° at 1000 RPM

Coil Specifications

AUTO-LITE NUMBER	CASE NUMBER	PRIMARY DRAW AT 70° F.	VOLTAGE
CAG-4002A	A11074	2.6 amps	12.5 volts
PRESTOLITE NUMBER			
200576	A24503	3.9 amps	6.3 volts
WICO NUMBER			
X30089B	A20949	5 amps	6 volts

Distributor Static Timing

To check the static (engine not running) timing proceed as follows:

1. Disconnect the center ignition coil wire from coil. Remove No.1 spark plug.

2. Hand crank the engine to set the No. 1 piston at top dead center of the compression stroke. Outward pressure will be felt when the thumb is placed over the No. 1 spark plug hole when the piston is coming up on the compression stroke. A lighter pressure is also felt on the exhaust stroke. DO NOT CONFUSE THE TWO. The crankshaft pulley degree mark (refer to chart below) should be lined up with the timing pointer, Figure 3F-15.

Static Timing

W9	Top Dead Center
W7 W9	2° After Top Dead Center
W8B W9B W10B	4° Before Top Dead Center

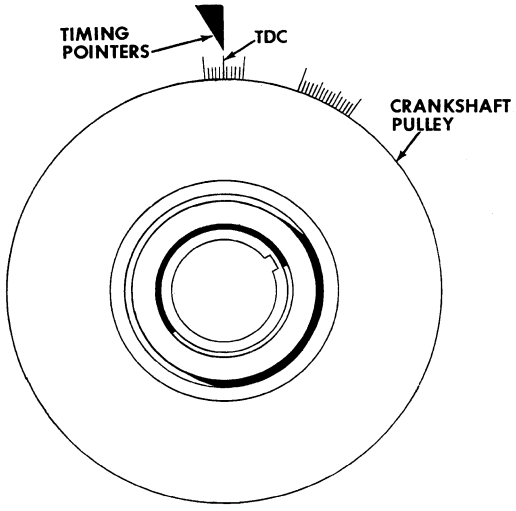

Figure 3F-15

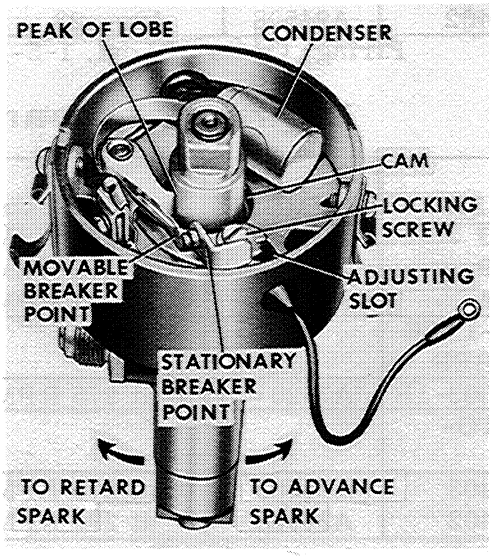

Figure 3F-16

STEP 2 - Remove the distributor cap, rotor and dust shield. Note the position of the points - if adjusted correctly, they will be just starting to open.

If the distributor is not timed correctly, proceed as follows:

Loosen the clamp at the base of the distributor.

TO RETARD THE TIMING - Turn the distributor clockwise until the points just begin to open. Then tighten the clamp at base of the distributor.

TO ADVANCE THE TIMING - Turn the distributor counter-clockwise until the points just begin to open. Then tighten the clamp at the base of the distributor. After the distributor has been timed correctly, replace the dust shield, rotor and distributor cap.

Contact Points Inspection

After each 500 hours of operation the distributor points should be checked for wear and adjustment.

The visual inspection should be a part of the 500 hour check:

COLOR - The normal color for contact points is a light gray. If the surfaces are black, the cause is usually due to the presence of oil, dirt or foreign matter.

If the contact point surfaces are blue, the cause is usually due to overheating because of:

1. Improper alignment of contact points.

2. Excessive high wattage in the primary circuit of the ignition coil.

3. Poor condenser.

CONTACT SURFACE WEAR - Figure 3F-17. illustrates the contact point wear patterns that can exist and their cause.

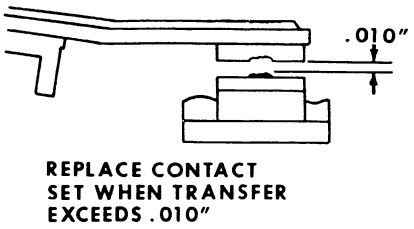

IDEAL CONTACT POINT WEAR PATTERN

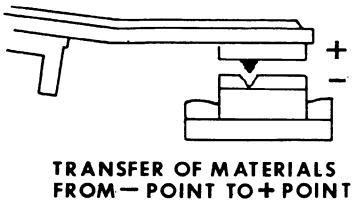

CONTACT POINT WEAR PATTERN SUCH AS THIS INDICATES CONDENSER CAPACITY MAY BE TOO LOW - THIS IS A NORMAL WEAR PATTERN, BUT INDICATES WHY THE CONDENSER SHOULD ALWAYS BE REPLACED AT THE SAME TIME POINTS ARE REPLACED.

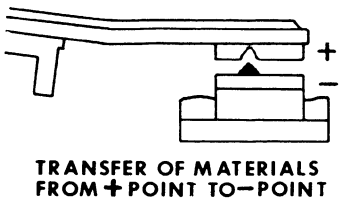

CONTACT POINT WEAR PATTERN SUCH AS THIS INDICATES CONDENSER CAPACITY MAY BE TOO HIGH - USE ONLY GENUINE CASE CONTACT POINTS - CONDENSER REPLACEMENT SETS TO INSURE THE CORRECT CONDENSER CAPACITY AND CONDENSER LOAD WIRE LENGTH.

Figure 3F-17

Contact Point Gap

The only accurate way to measure the gap is to use a Dwell Meter.

The advantage of using a Dwell Meter is that it not only measures dwell (that portion of the firing cycle that the points dwell together), but also helps detect any worn cam lobes, bouncing points or misalignment of the rubbing block and cam. It also gives an indication of the breaker arm spring tension. Refer to Page 3F-13 for the correct Dwell (cam) angle.

Figure 3F-18, illustrates some of the difficulties that can be encountered when trying to measure point gap with a feeler gauge.

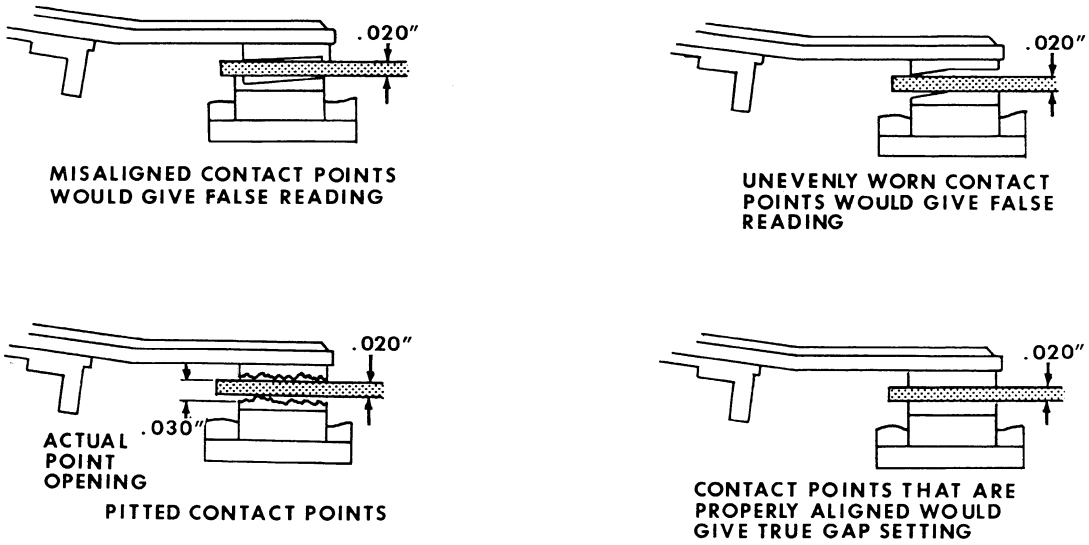

Figure 3F-18

Contact Points And Condenser Replacement

To replace the contact points and condenser proceed as follows:

1. Remove the distributor cap, rotor and dust shield.
2. Contact point and condenser replacement can be greatly facilitated by removing the breaker plate assembly from the distributor.

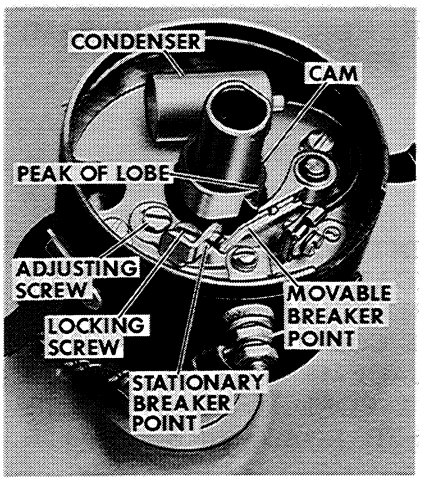

Figure 3F-19 Auto-Lite

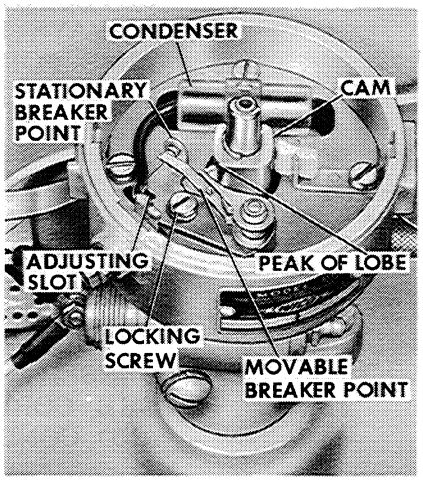

Figure 3F-20 Wico

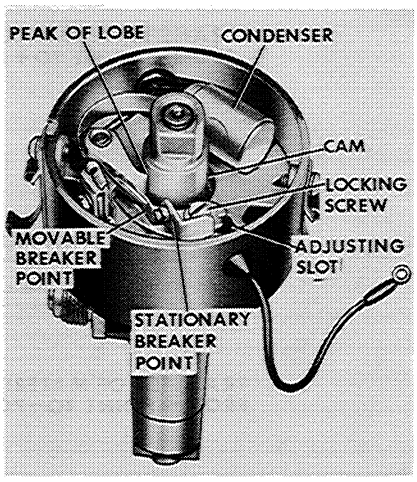

Figure 3F-21 Prestolite

3. Remove the contact points and condenser from the breaker plate and install the new points and condenser.
4. The Breaker Arm should pivot freely on the hinge pin. The outside diameter of the contact points should register perfectly with contact being made at the center of the contacts. The contacts can be aligned by bending the Stationary Contact, Figure 3F-22.
NEVER BEND THE BREAKER ARM BETWEEN THE RUBBING BLOCK AND THE CONTACT.

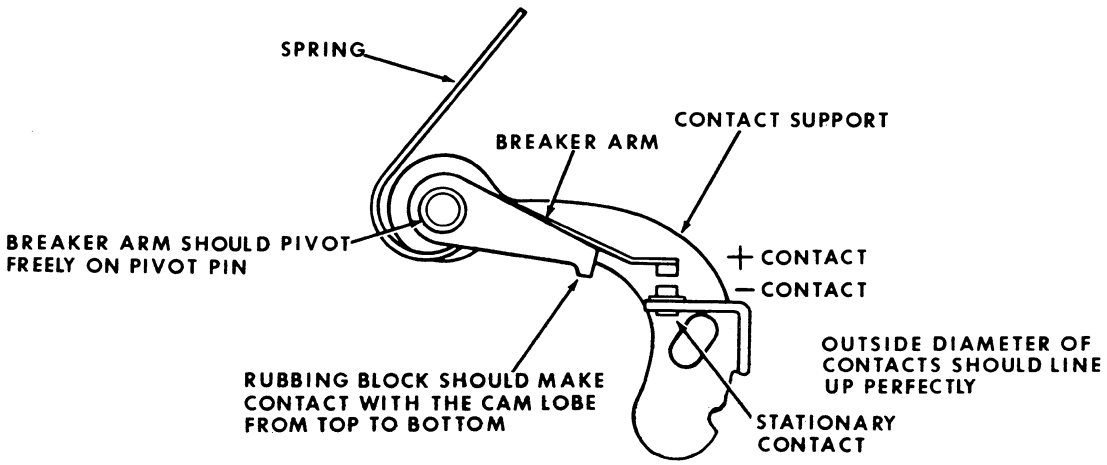

Figure 3F-22

5. Install the breaker plate assembly in the distributor - align the rubbing block with the cam by using a thin strip of white paper and carbon paper between the rubbing block and cam, so that when the cam is rotated against the paper a carbon impression will be made. The carbon impression should show a straight line from the top to the bottom of the rubbing block, indicating full length contact with the lobe of the cam.
NOTE The rubbing block may contact the cam on one edge (either front or rear) - This is permissible as long as there is contact the full length (up and down) of the cam.

6. Check Breaker Arm Spring Tension - The breaker arm spring tension is one of the most important factors influencing distributor performance.
TOO MUCH SPRING TENSION - Will cause the arm to bounce and result in engine missing.
TOO LITTLE SPRING TENSION - Will prevent the rubbing block from following the cam and will cause variation in the dwell and point gap.

NOTE On Auto-Lite or Prestolite Distributors, the spring tension is adjusted by moving the end of the spring either forward or rearward (in or out).

A spring scale hooked to the breaker arm at an angle of 90° with the point surface, Figure 3F-23. Reading should be taken just as the points start to open. Check specifications, Page 3F-13.

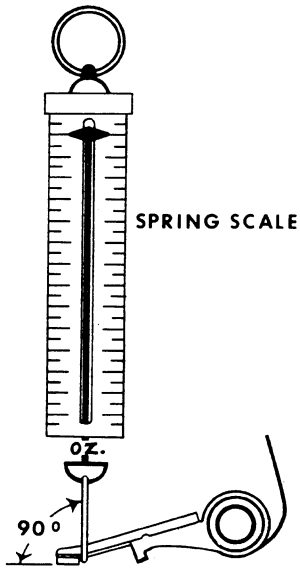

Figure 3F-23

NOTE On Wico Distributors, tension can be increased by bending breaker arm spring away from the breaker arm. Tension can be decreased by squeezing the spring toward the breaker arm.

Distributor Cap

Wipe the inside of the cap with a clean cloth and check for the following:

1. Cracks or carbonized paths which allow high tension leakage to ground. If this has been taking place, replace cap.

2. If corroded or burned brass inserts in the cap will not clean up by lightly filing them, replace cap.

3. Inspect the two vent holes in the cap. Some Auto-Lite caps have a rubber plug in one hole do not remove it. Be sure they are open and clean.

4. Inspect the carbon brush and spring for free movement. Replace if carbon is worn excessively.

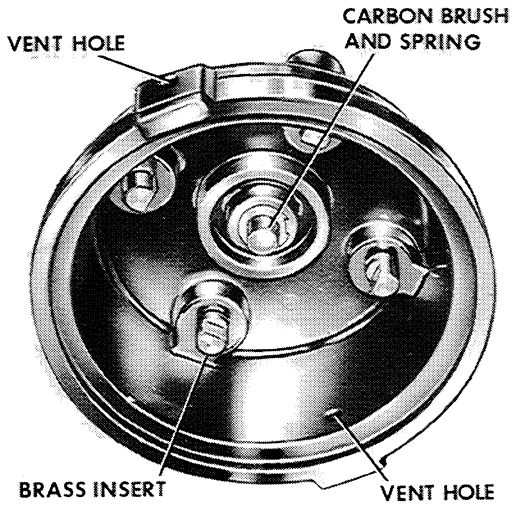

Figure 3F-24

Distributor Rotor

1. Check for cracks and carbonized paths which cause high tension leakage to ground. Replace rotor if this is found.
2. Check rotor for black deposits at the spark end. This can be removed with a greaseless type cleaner such as carbon tetrachloride. Remove any corrosion from the rotor tip by filing with a pointed file. If this does not clean the rotor it should be replaced.

COIL POLARITY

In a negative grounded system the negative or primary terminal marked with a (–) should be connected to the distributor terminal. In a positive grounded system the positve or (+), terminal should go to the distributor terminal. Coil polarity refers to the direction of high tension current flow and should always be negative at the spark plugs. Reversed coil polarity is almost always traced to reversed leads at the coil. A simple way to check coil polarity to remove one spark plug wire at the plug and hold it about 1/4 of an inch away from the spark plug while the engine is idling. Insert the point of a wood lead pencil between the wire end and spark plug, Figure 3F-25 and 3F-26.

If the spark flares or feathers and has a slight orange color on the plug side of the pencil coil polarity is correct. If this occurs on the wire side of the pencil, coil polarity is reversed. Reverse wires at the coil.

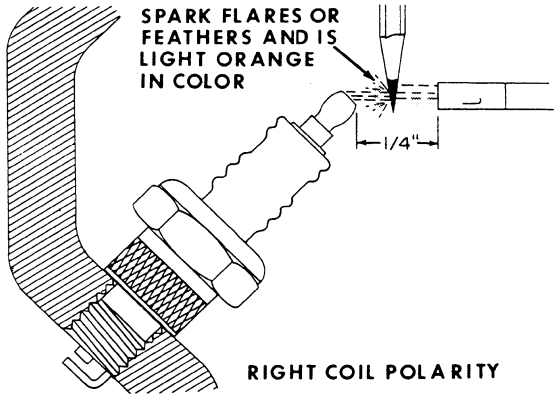

Figure 3F-25

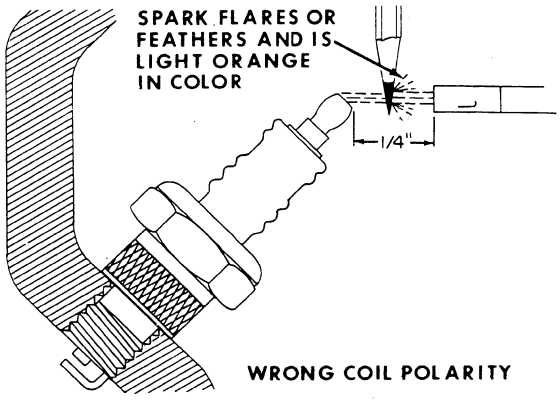

Figure 3F-26

CHECKING IGNITION COIL RESISTOR

On Case Spark Ignition Engines that are equipped with a Wico or Prestolite Resistor System the resistor can be checked for resistance with an ohmmeter as illustrated in Figure 3F-27.

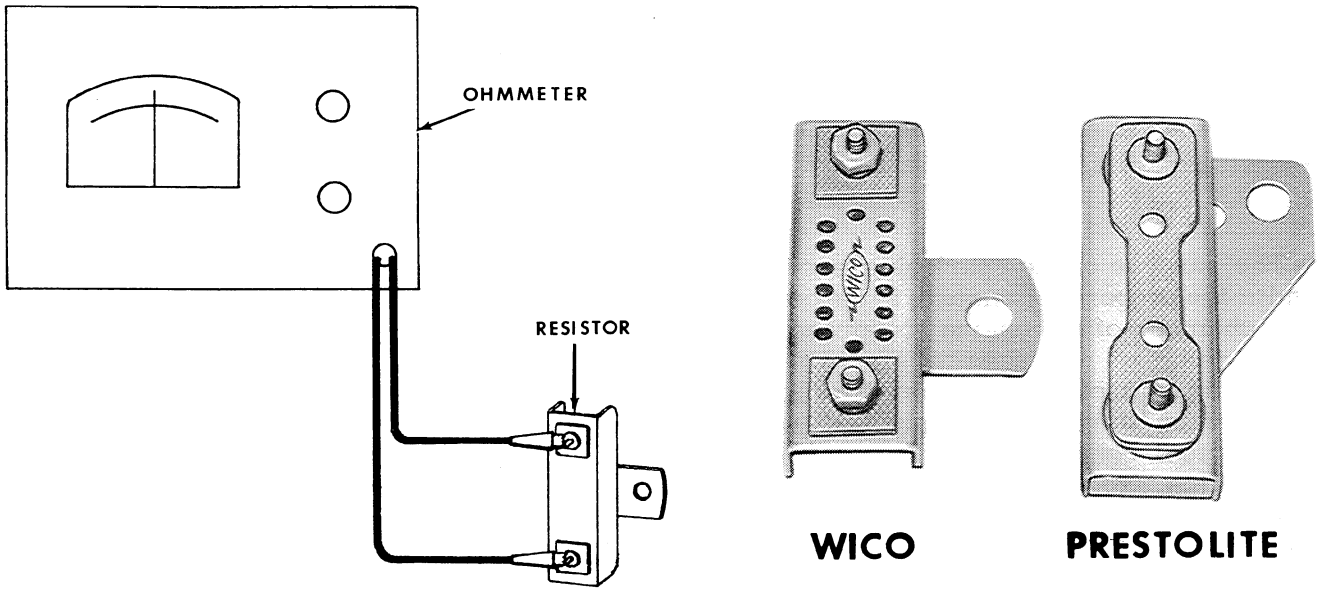

Figure 3F-27

The "Resistorized" Ignition System "works" as follows:

While the engine is being turned by the cranking motor, battery voltage is fed directly to the coil, bypassing the ballast resistor. This allows for a "hotter" starting spark.

Once the engine starts and the cranking motor is disengaged, the battery voltage is fed through the ballast resistor where it is reduced before it enters the ignition coil. This reduced voltage provides a longer ignition system service life.

CAUTION

The Wico resistorized ignition system and the Prestolite resistorized ignition systems are designed as independent systems and the components from one system must not be used with components of the other - as the life of the ignition system will be drastically reduced by an interchanging of components.

Coil Resistor Specifications at 75° F

A20934 (Wico No. X30061) Resistor ---------- 1.98 ohms to 2.42 ohms

A24504 (Prestolite No.201020) Resistor ---------- .410 ohms to .520 ohms

SPARK PLUGS

Specifications

Prestolite 18 8 or equivalent
Thread Size ---------- 18MM
Reach ---------- 1/2 Inch
Gap Setting ---------- .025 Inch
Installation Torque ---------- 34 Foot Pounds
Socket Wrench Size ---------- 7/8 Inch

The purpose of the spark plug is to fire or ignite the proper fuel mixture in the combustion chamber of the engine at a preset time.

This is controlled by the distributor. Spark plugs which do not function properly will increase fuel consumption, cause crankcase oil dilution, excessive deposit in the combustion chamber and greatly reduce the efficiency of the engine.

A close examination of the spark plugs will give the service man an indication in general of the engine condition. Fouled or burnt spark plugs can be used as good visible evidence to show the customer when soliciting a valve or overhaul job.

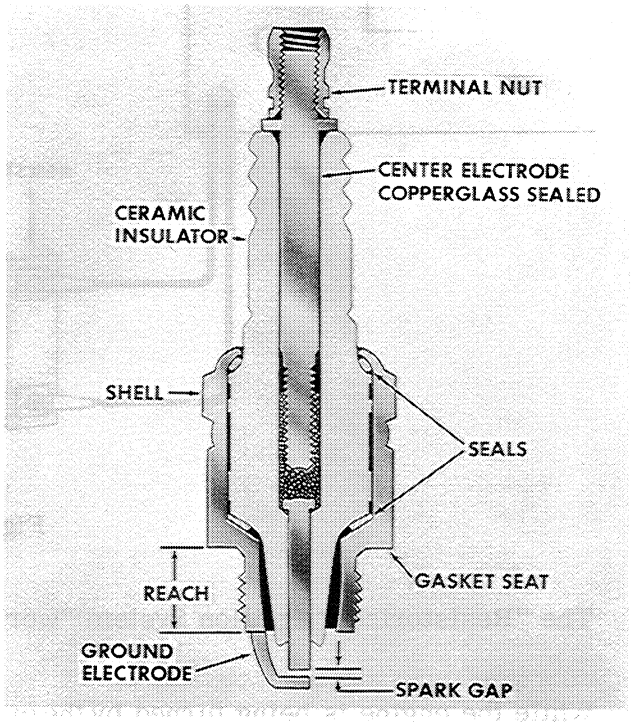

Figure 3F-28

Spark Plug Removal and Inspection

Remove the wires from each spark plug and use a thin wall deep socket spark plug type wrench of correct size (7/8") to remove the spark plugs.

The wrong size or type socket wrench can cause distortion or insulator breakage.

Spark Plug Gasket

The first thing to inspect after removal of a plug is the copper gasket. This will tell you if the spark plugs were installed correctly.

Spark plugs that have been properly torqued in place to 34 foot pounds will have the copper gasket compressed to 1/2 of its original thickness.

Spark plug gaskets that are not compressed enough when the plugs are installed can cause compression leakage and the plug will run hotter then it should as the heat will not be transferred from the plug to the cylinder head as fast.

Spark plug gaskets that are compressed too much when the plugs are installed will cause the plug to run colder then it should and thus will foul a lot faster. It is also possible that when the plug is installed too tight it will cause distortion of the electrodes. Thus the plug gap would be increased beyond its original setting.

Spark Plug Insulators

Always inspect each spark plug for broken or cracked insulator if a crack of any severity is found, the spark plug must be discarded, Figures 3F-29 and 3F-30.

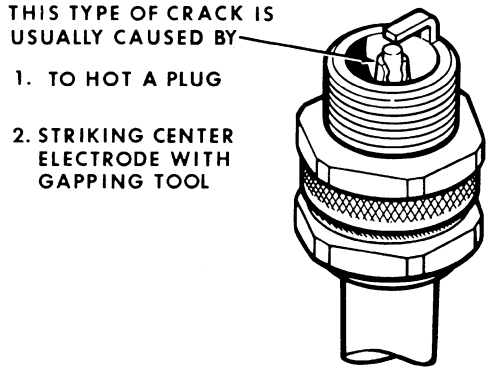

Figure 3F-29

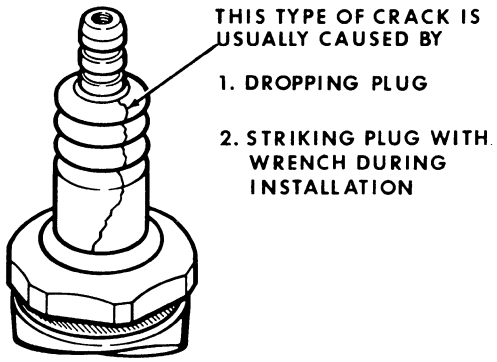

Figure 3F-30

Spark Plug Heat Range

The term"Heat Range" classifies a spark plug according to its ability to transfer heat from the gap end of the plug to the cylinder head. The ability of a plug to transfer heat is determined by the length of the insulator nose, Figure 3F-31.

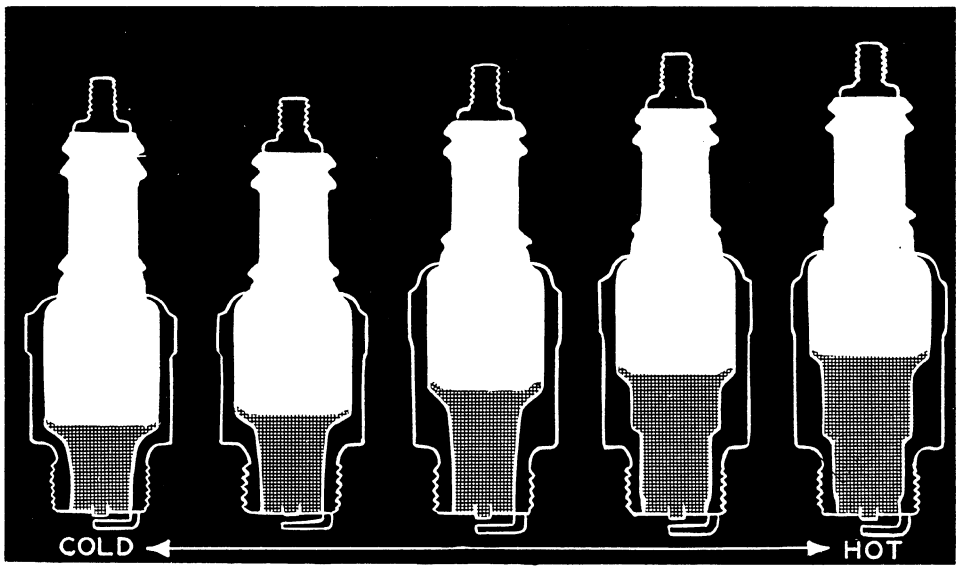

Figure 3F-31

Cold Spark Plugs

A cold plug has a short insulator nose which cools quickly. Cold plugs are used where combustion chamber temperatures are higher then normal. This condition will exist when the engine is under continual heavy loads and in hot weather operation.

Hot Spark Plugs

A hot plug has a long insulator nose which cools much slower and is used when engine combustion chamber temperatures are relatively low. This condition will exist in cold weather operating, prolonged idling and light loads.

Medium or Normal Heat Range Spark Plugs

The medium length insulator nose cools normally and is not subjected to constant high or low temperatures or constant light or heavy loads. This medium range plug represents a compromise to cover the widest range of operating conditions.

If hot plugs are installed in an engine for light loads or cold weather operation, it is very important that they be replaced by colder plugs when engine is operated at sustained heavy loads in hot weather. Using too hot a plug for sustained heavy load operation may result in the spark plugs becoming over heated, causing pre-ignition, cranking of the plug insulator and serious engine damage.

Electrodes

Examine the spark plug electrodes to determine if the plug is the proper heat range. Deposits on the electrodes will give some indication of the condition of the engine.

Oil Fouled Spark Plugs

Oil fouled spark plugs will have wet oily deposits on the electrode and the bottom of the shell.

Oil fouling indicates an excess amount of crankcase oil is getting into the compression chambers as a result of worn piston rings, cylinder sleeves or valve guides.

A hotter spark plug will temporarily relieve oil fouling of the plugs, but the permanent cure is to eliminate the cause of the oil getting into the compression chamber.

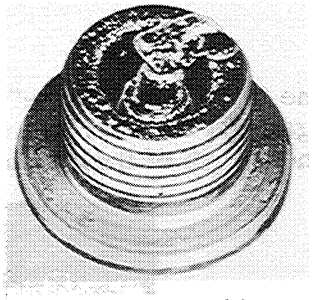

Figure 3F-32

Burned or Overheated Spark Plugs

Burned or overheated spark plugs will have a dry shiny white glazed, or badly cracked insulation nose. This can be caused by any one of the following:

1. Too lean a fuel air mixture
2. Improper ignition timing
3. Too hot a spark plug for the type of engine service
4. Burned or sticking valves
5. Engine cooling system not operating properly

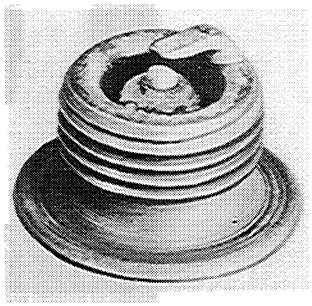

Figure 3F-33

Fuel Fouled Spark Plugs

A fouled spark plug has a dry black deposit on the electrode and bottom of the shell. It can be caused by any of the following:

1. Excessive use of the choke by the operator.
2. Too rich an air fuel mixture
3. Prolonged engine idling
4. The use of too cold a spark plug for the type of engine service
5. Clogged air cleaner
6. Poor ignition output
7. Normally worn out spark plugs

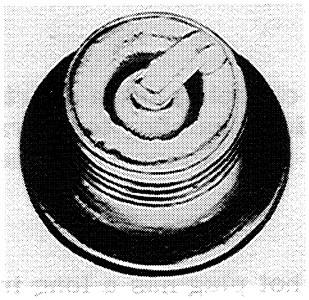

Figure 3F-34

Normal Spark Plugs

Spark plugs that have been worn out by normal service can be identified by a light brown to grayish tan dry deposit which indicates a balanced ignition and combustion system and the plugs are of the proper heat range.

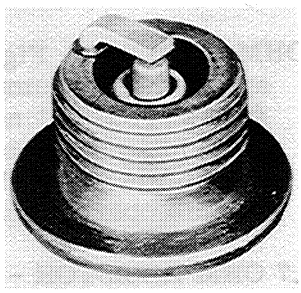

Figure 3F-35

NOTE If a highly leaded fuel is used a white powdery or yellow glazed deposit will appear. These deposits should be cleaned off regularly.

Cleaning and Gapping Spark Plugs

Use an abrasive type cleaning machine (if available) to remove the deposits on the plug, after this has been done, wire brush the threads.

File the electrode sparking areas to obtain bright flat parallel surfaces. The plugs should be washed in a good cleaning solvent and blown dry with air pressure. Reset the gap between the electrodes to proper setting.

Set the gap by bending the ground or outside electrode, never try to bend the center electrode as the insulator will crack.

Use a round type feeler gauge to measure the gap as a flat type feeler gauge will give a false reading, Figure 3F-36.

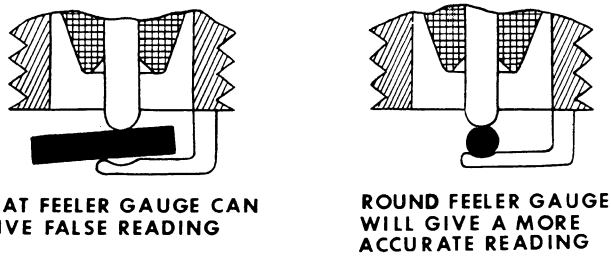

Figure 3F-36

Installing the Spark Plugs

Make sure the cylinder head threads and the gasket seats are clean. Always install a new gasket whenever a spark plug has been removed and reinstalled. Use a thin wall deep socket type spark plug wrench (7/8") and torque to 34 foot pounds. If a torque wrench is not used tighten each plug until the plug, gasket and head make contact and then give them 3/4 of a turn which will compress the gasket properly. Replace spark plug wires in the order in which they were removed.

INSTRUMENT PANEL RESISTOR CHECKS

On loaders equipped with a 24 Volt Electrical System the following resistors are used in the wiring circuit and must be disconnected, for checking with an ohmmeter .

5 OHM RESISTOR - Figure 3F-37A located on the light switch - this resistor reduces the voltage to the tail lamps below 24 volts.

NOTE You will note in the 24 volt wiring diagrams, that when the combination tail and stop lamp is used as a "stop lamp," the bulb operates on 24 volts, this is to make it brighter - when the combination lamp is a "tail light" the resistor cuts down the voltage so bulb operates on less than 24 volts.

42.7 OHM RESISTOR - Figure 3F-37B (an adjustable 50 ohm resistor is used) - located in the gauge cluster wiring and reduces the voltage (below 24 volts) to the converter oil temperature gauge, fuel level gauge and engine temperature gauge.

75 OHM RESISTOR - Figure 3F-38 located on the fuel gauge, engine oil pressure gauge, engine coolant temperatue gauge and converter temperature gauge and reduces the 24 volt to the proper voltage for the gauges to function correctly.

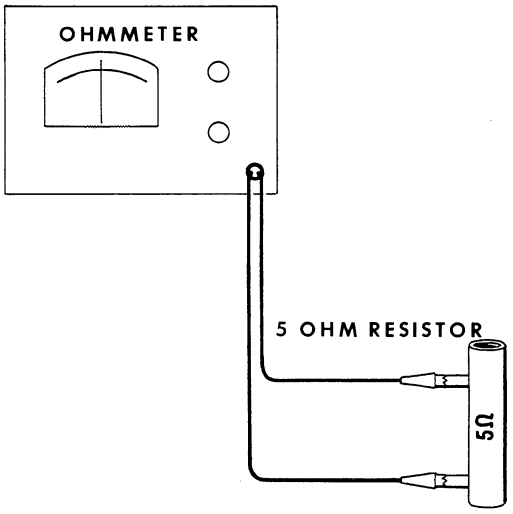

Figure 3F-37A

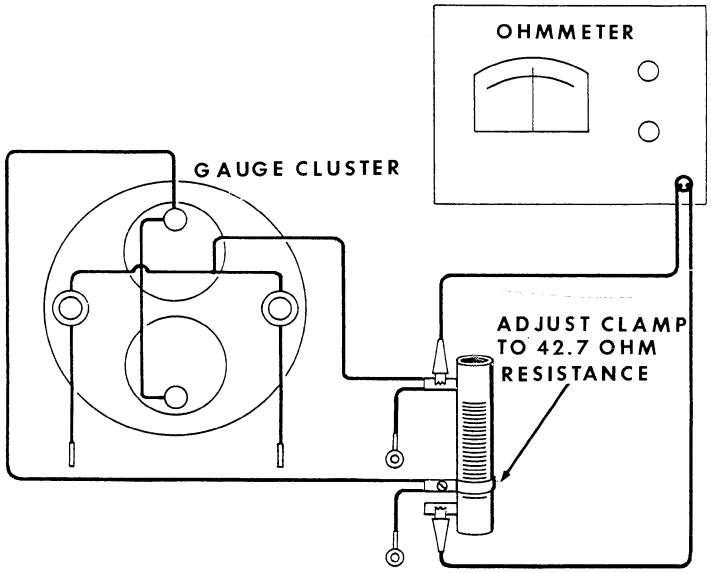

Figure 3F-37B

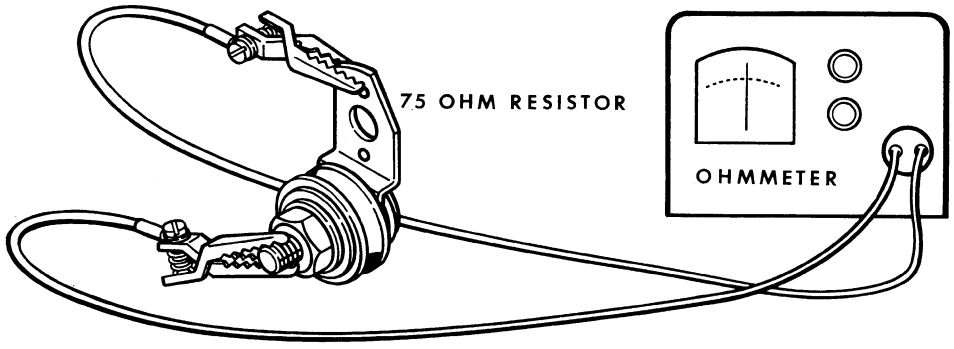

Figure 3F-38

VACUUM TYPE AIR CLEANER INDICATOR CHECK

Loaders equipped with Vacuum Only Type Condition Indicator, Figure 3F-39, the indicator can be tested on a Distributor Tester (similar to the one illustrated in Figure 3F-42) that is equipped with a manometer.

1. Remove condition indicator from air cleaner mounting bracket and attach the manometer hose to indicator.
2. Turn "on" battery or power switch to operate tester.
3. Turn tester vacuum regulator switch "on" and slowly increase vacuum until red appears and stays in plastic tube on indicator. Depending upon what indicator is being checked refer to table below for proper specifications.

If the condition indicator does not meet this test it should be replaced with a new condition indicator as there is no adjustment. Replace only with a genuine Case Condition Indicator.



Figure 3F-39. Vacuum Only Type

CASE NO.	DONALDSON NO.	DECAL COLOR CODE	INCHES OF WATER	INCHES OF MERCURY
A17652	RBX00-2220	GREEN	20"	1.46"
L10329	RBX00-2225	WHITE	25"	1.82"

VACUUM ELECTRICAL AIR CLEANER SWITCH CHECK

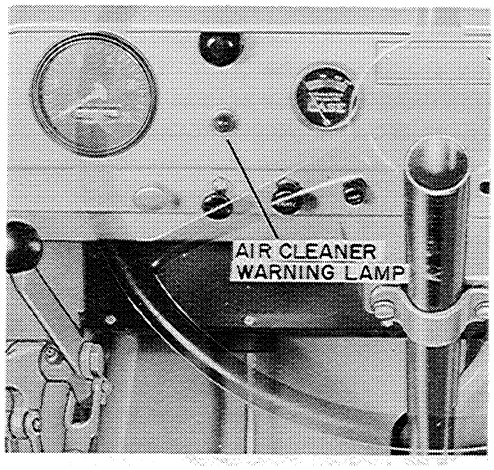

Figure 3F-40. Vacuum Electric Type

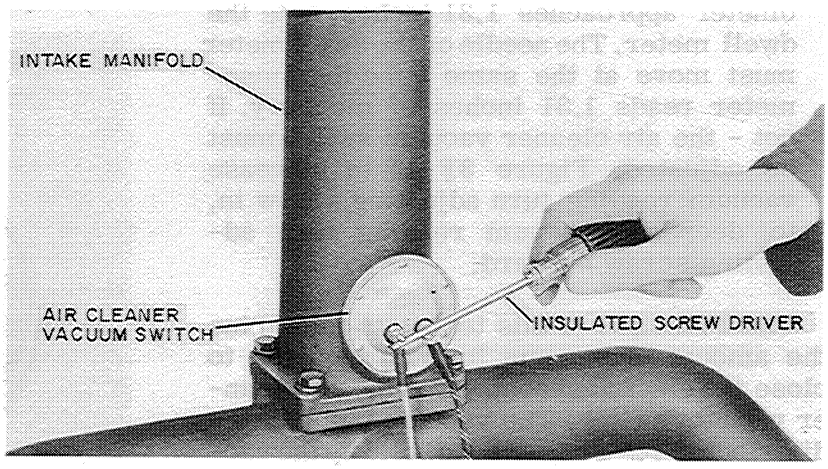

Figure 3F-41. Vacuum Electric Type

When the warning lamp operates properly by placing a screw drive across the vacuum switch terminals, disconnect the wires at the vacuum switch. Remove the vacuum switch for testing and calibrating as described on Page 3F-26.

VACUUM SWITCH ADJUSTMENT - The air cleaner vacuum switch must be calibrated and set so when the air cleaner element becomes plugged to the point where the air intake system draws a vacuum of 18 inches of H_2O, the warning lamp on the instrument panel flashes on.

Calibrating The Air Cleaner Vacuum Switch

The Air Cleaner Vacuum Switch can be calibrated on a distributor tester (similar to the one illustrated in Figure 3F-42),that is equipped with a manometer.

1. Attach the manometer hose on the tester to the vacuum switch as illustrated, Figure 3F-42.
2. Attach the "distributor lead wire" of the tester to a terminal on the vacuum switch.
3. Attach the "ground lead wire" to the other vacuum switch terminal.
4. Turn "on" the battery or power switch to operate the tester.
5. Turn the tester Dwell Meter Switch "on".
6. Turn the Tester Vacuum Advance Unit Switch "on".
7. With the vacuum regulator, slowly increase the vacuum until the manometer reads 1.31 inches of mercury (this is equivalent to 18 inches of H_2O) as the manometer approaches 1.31 inches, note the dwell meter. The needle on the dwell meter must move at the same time the manometer reads 1.31 inches of mercury. If not - the air cleaner vacuum switch must be adjusted, Figure 3F-43 to increase vacuum reading turn adjusting screw in, to decrease vacuum reading turn adjusting screw outward.

The Principal of this test is to determine the amount of vacuum that is required to close the electrical contacts in the air cleaner vacuum switch. The vacuum pump on the distributor tester is used to build up the vacuum, the Dwell Meter indicates when the contacts close.

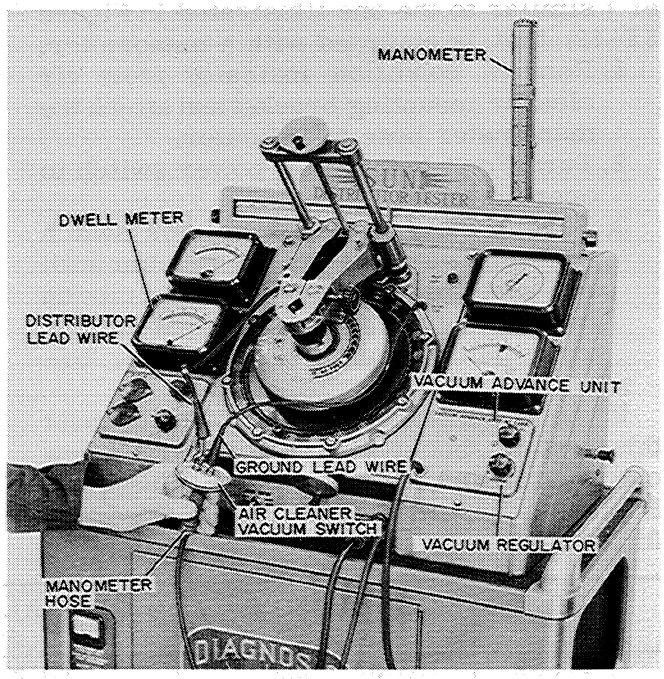

Figure 3F-42

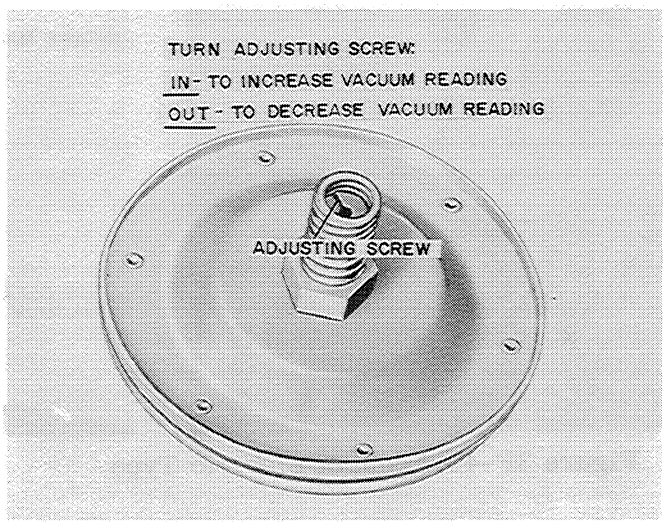

Figure 3F-43

It is very important to the life of the engine that the Vacuum Switch be operating accurately at all times.

NOTE: The CASE CORPORATION reserves the right to make improvements in design or changes in specifications at any time without incurring any obligation to install them on units previously sold.

W7 GASOLINE ELECTRICAL SYSTEMS
With Gauge Cluster Warning Lights Without Alternator

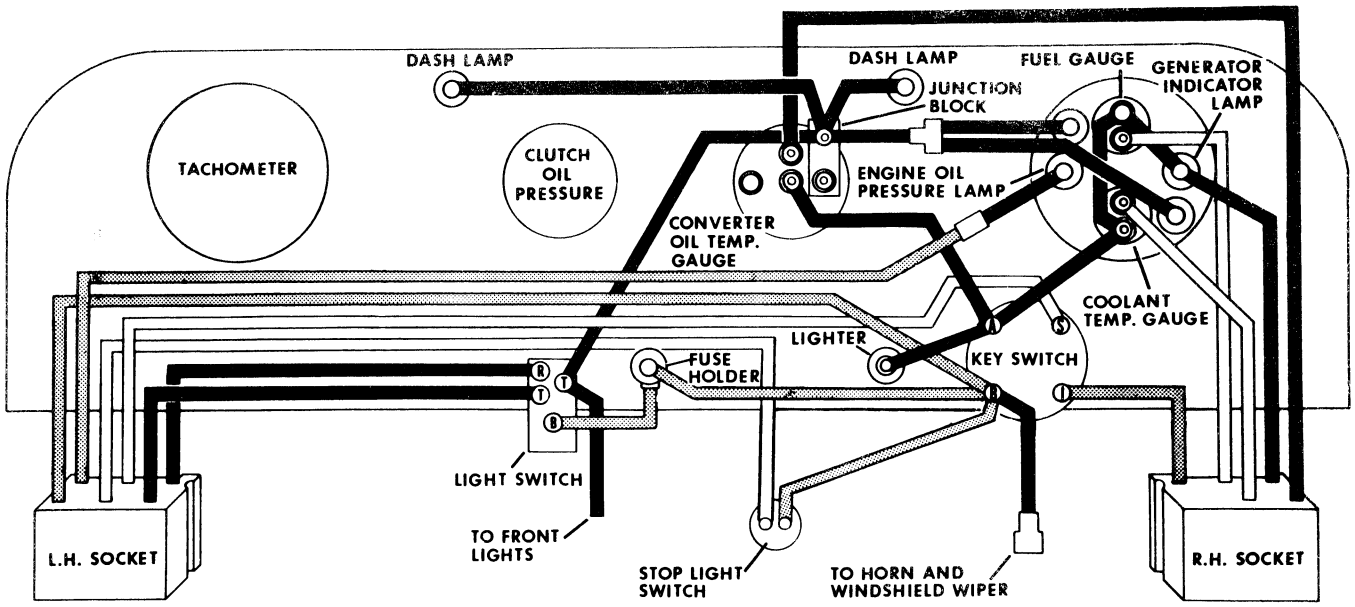

INSTRUMENT PANEL AS VIEWED FROM OPERATOR'S SEAT LOOKING THROUGH PANEL

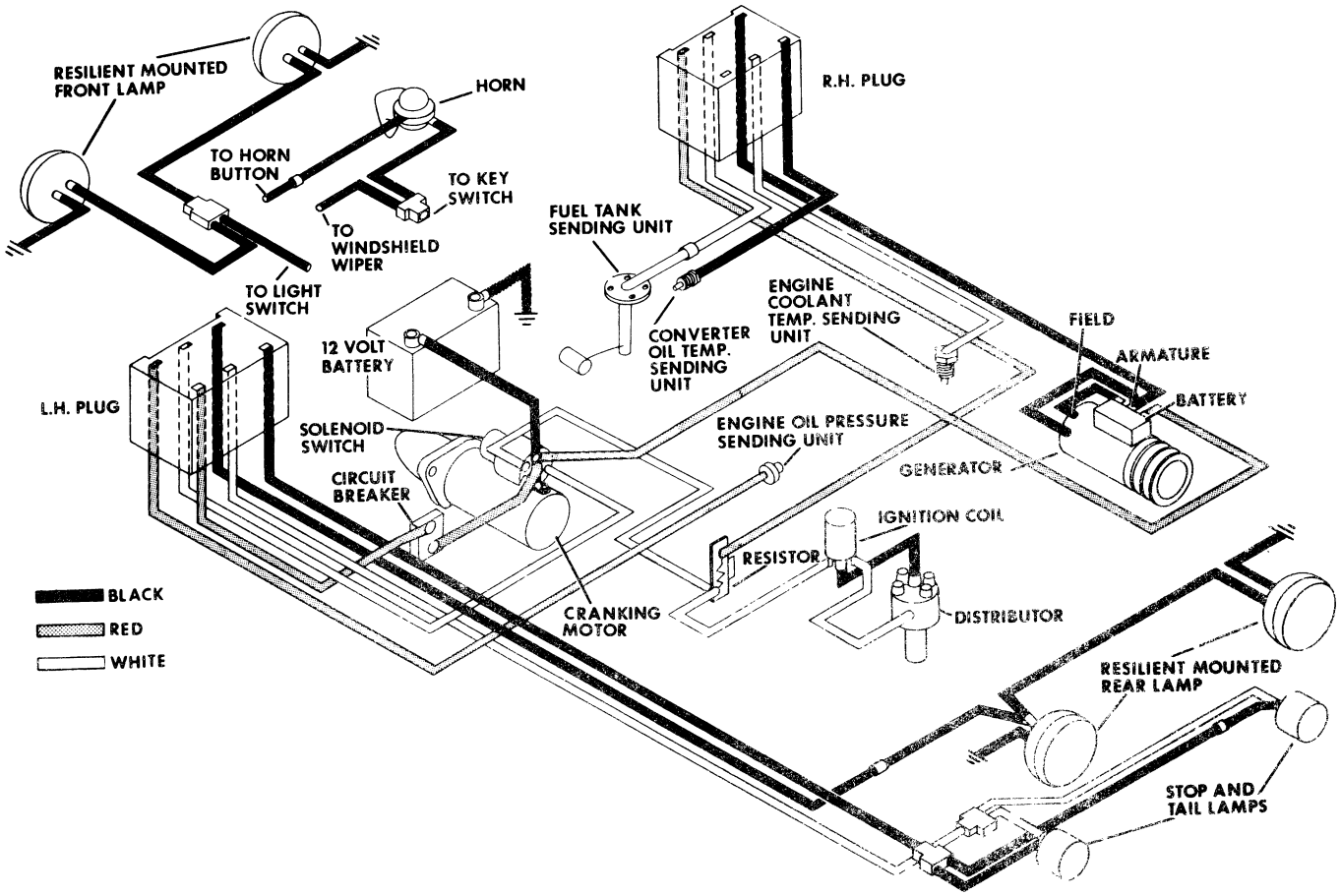

ACAAO PRINTED IN U.S.A.

W7 DIESEL ELECTRICAL SYSTEMS
With Gauge Cluster Warning Lights Without Alternator

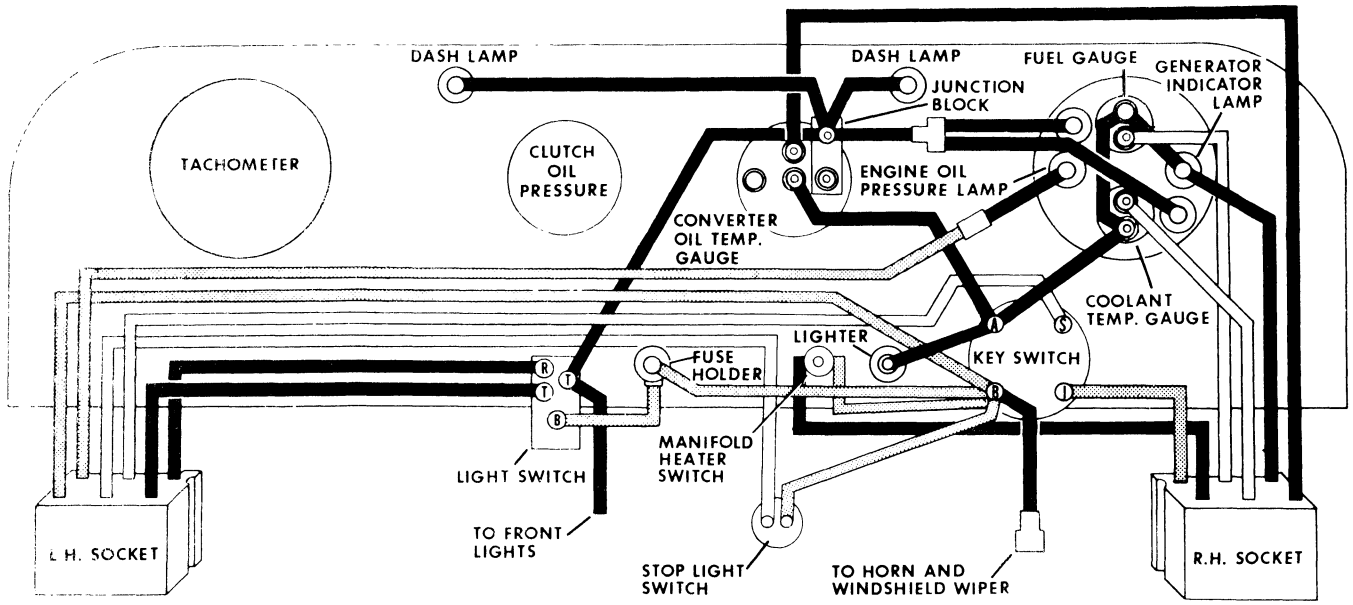

INSTRUMENT PANEL AS VIEWED FROM OPERATOR'S SEAT LOOKING THROUGH PANEL

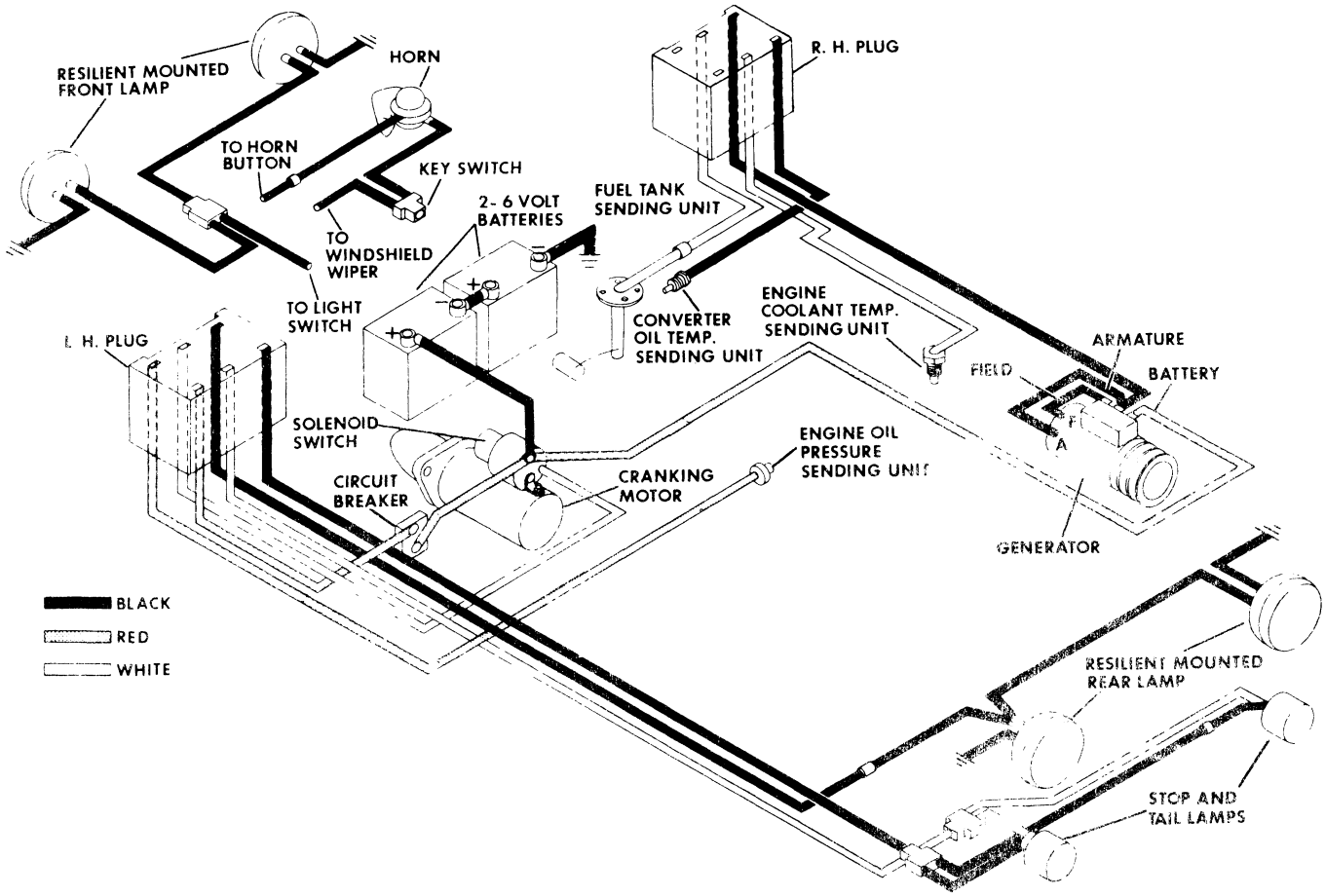

W7 GASOLINE ELECTRICAL SYSTEMS
With Remote Gauges Without Alternator

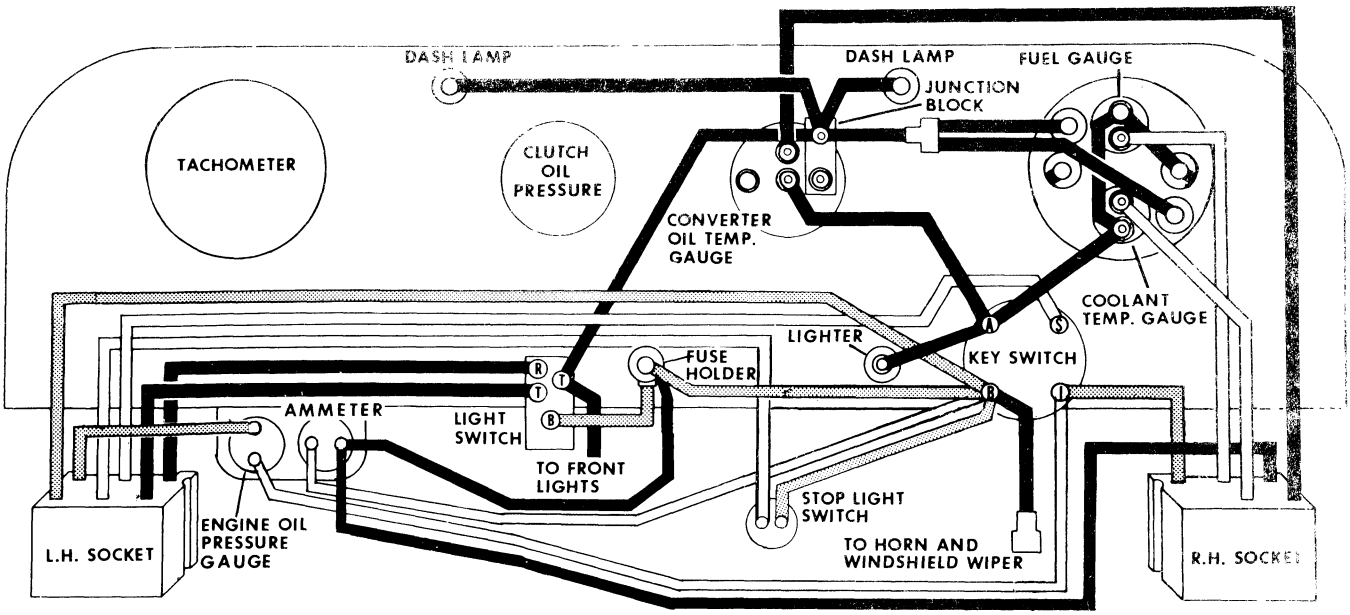

INSTRUMENT PANEL AS VIEWED FROM OPERATOR'S SEAT LOOKING THROUGH PANEL

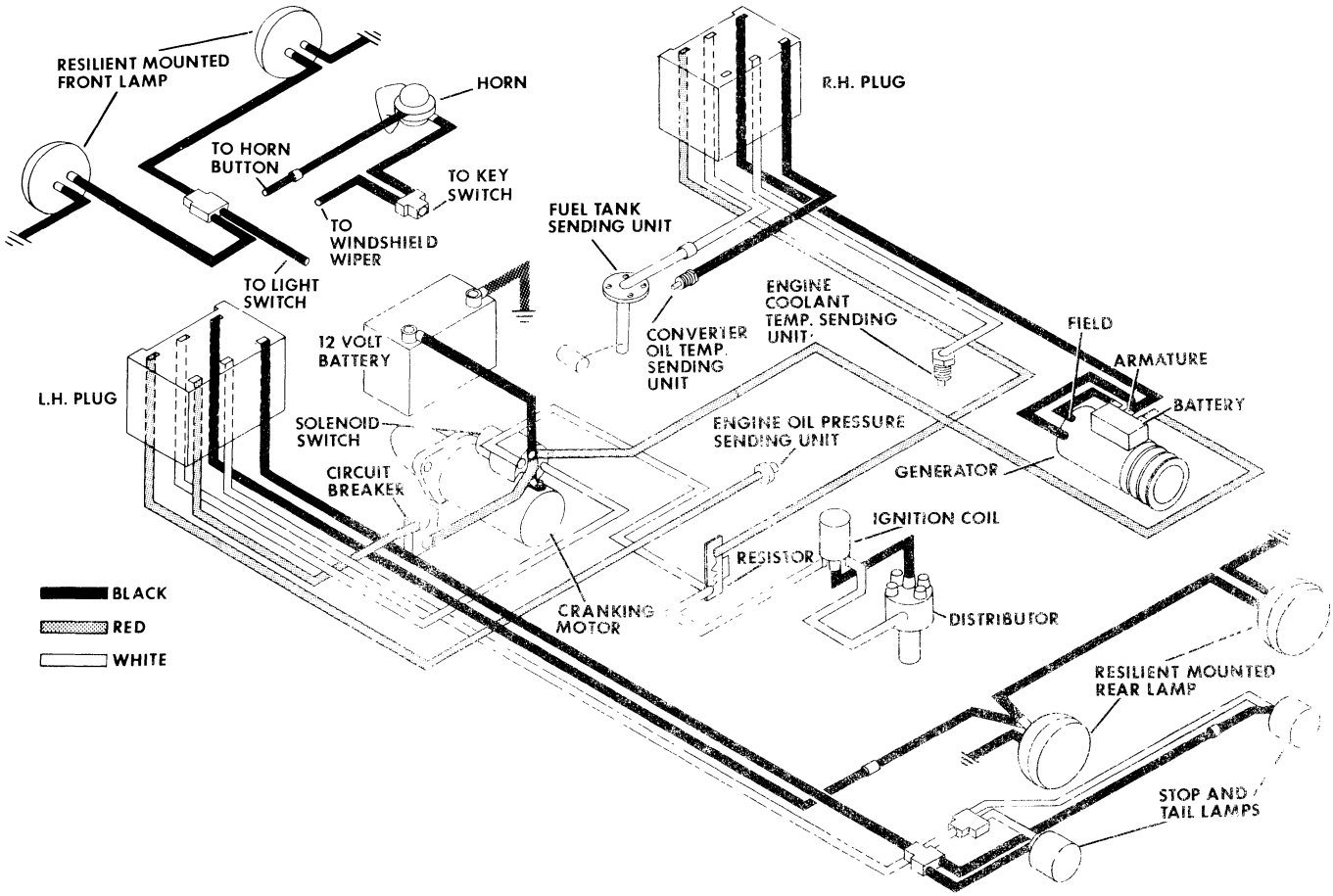

ACAAO PRINTED IN U.S.A.

W7 DIESEL ELECTRICAL SYSTEMS
With Remote Gauges Without Alternator

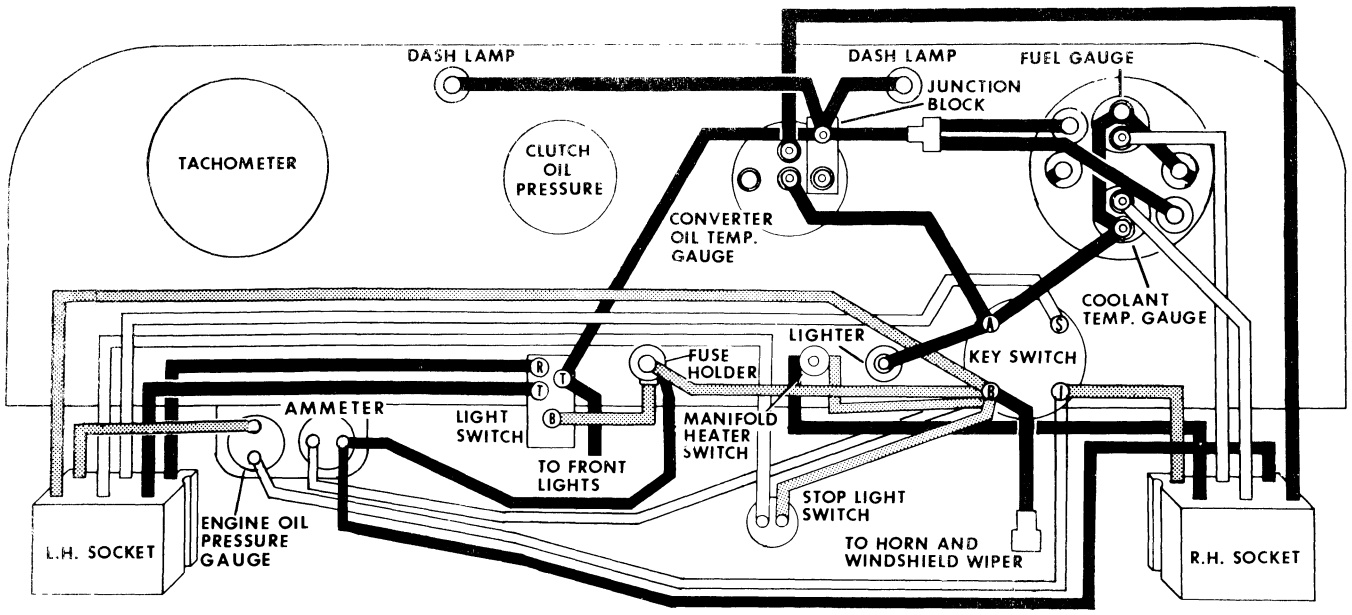

INSTRUMENT PANEL AS VIEWED FROM OPERATOR'S SEAT LOOKING THROUGH PANEL

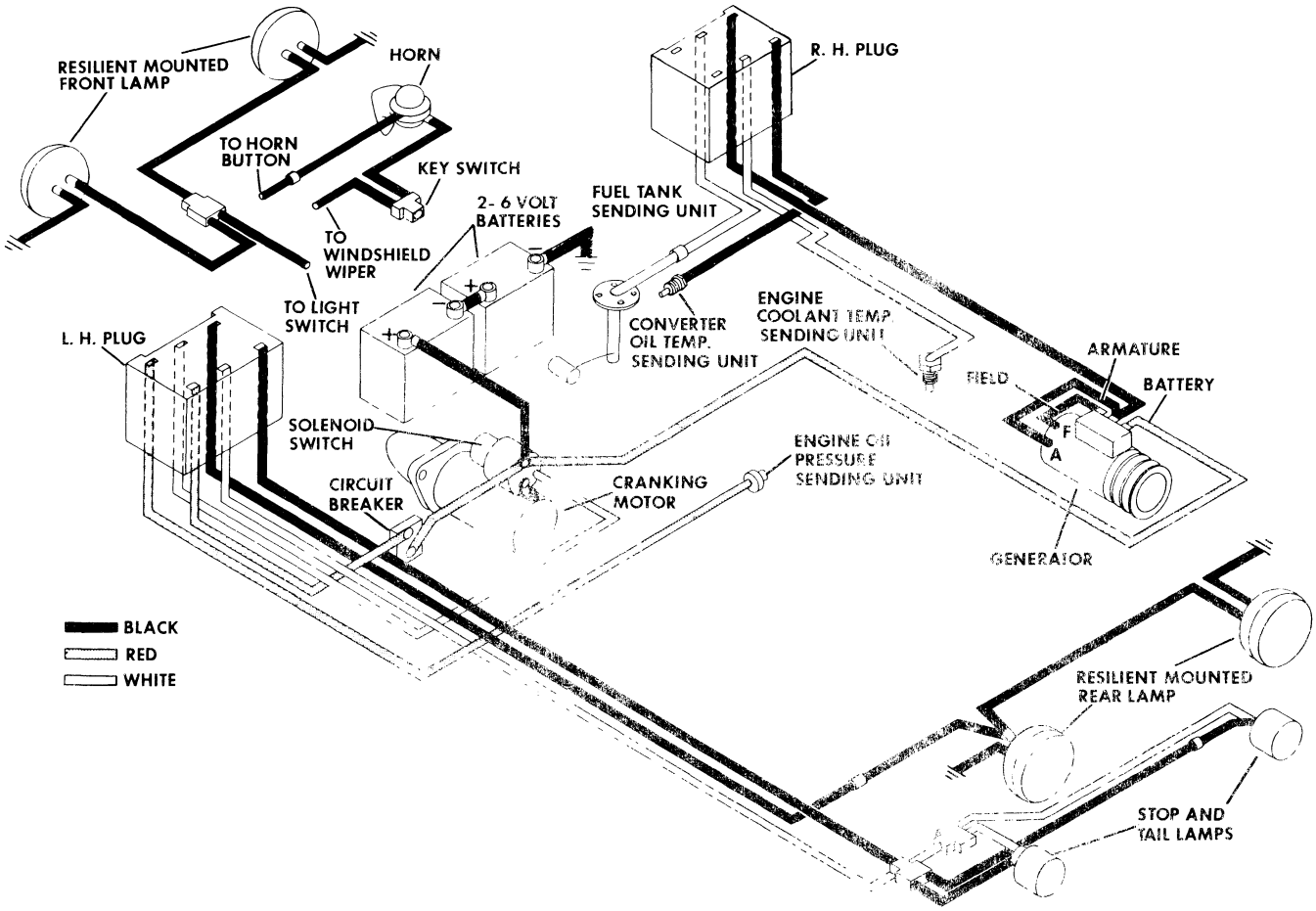

W7 GASOLINE ELECTRICAL SYSTEMS
With Individual Gauges Without Alternator

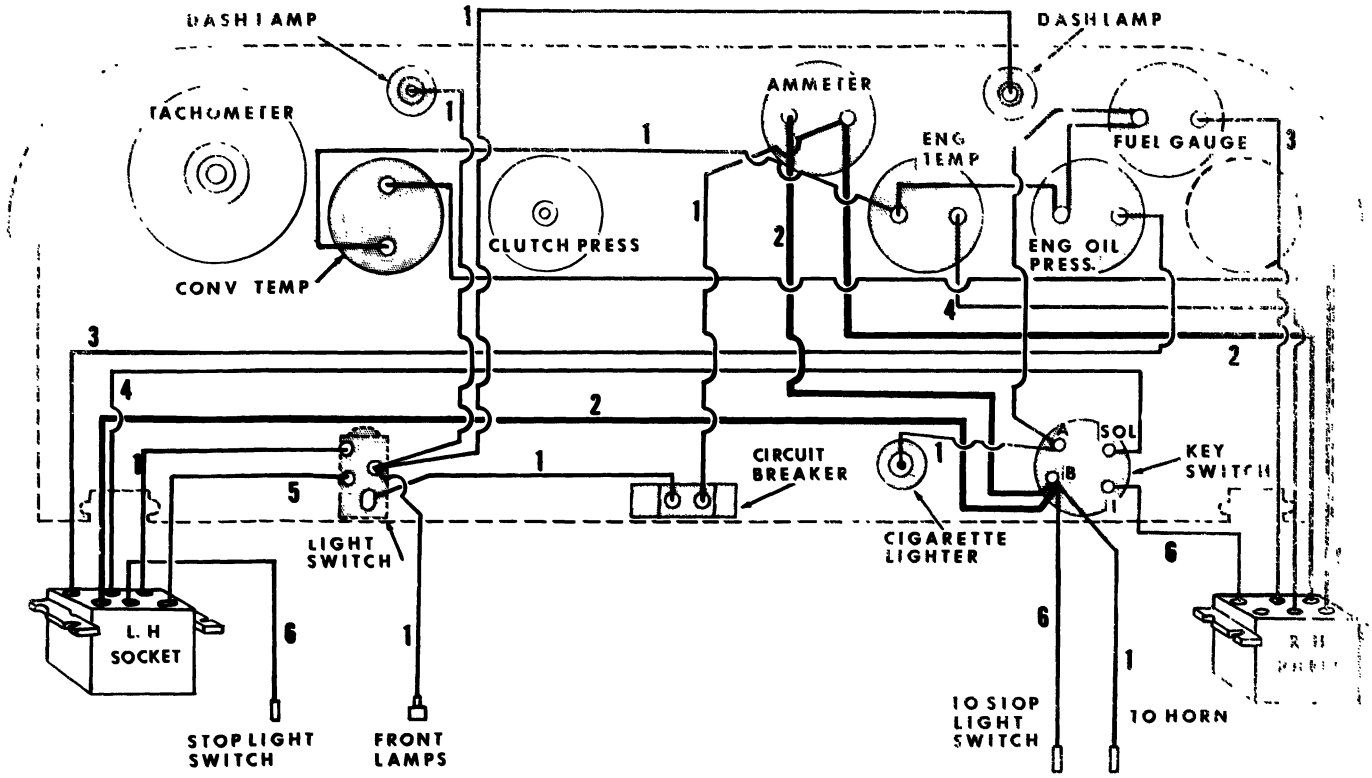

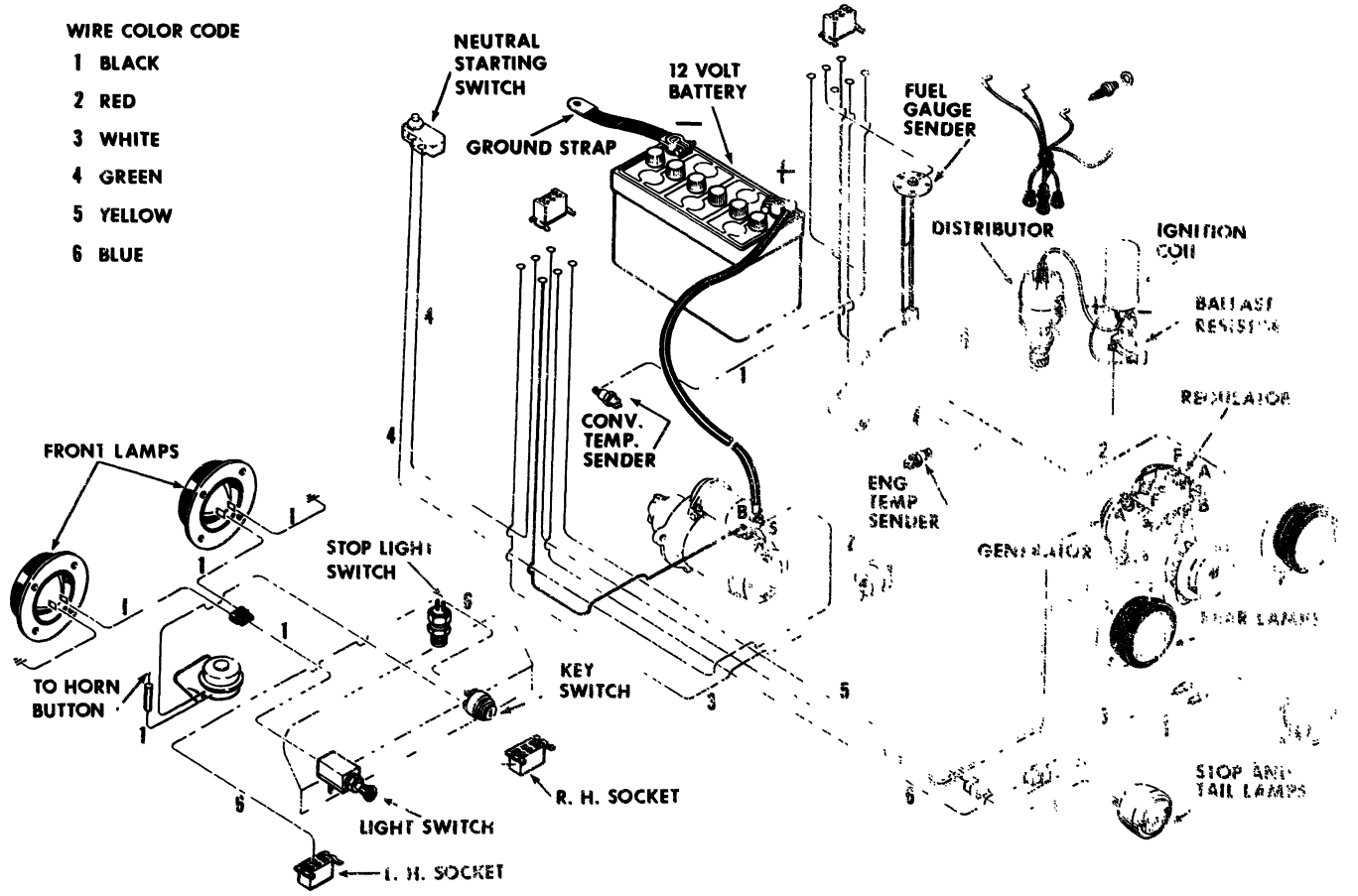

W7 DIESEL ELECTRICAL SYSTEMS
With Individual Gauges Without Alternator

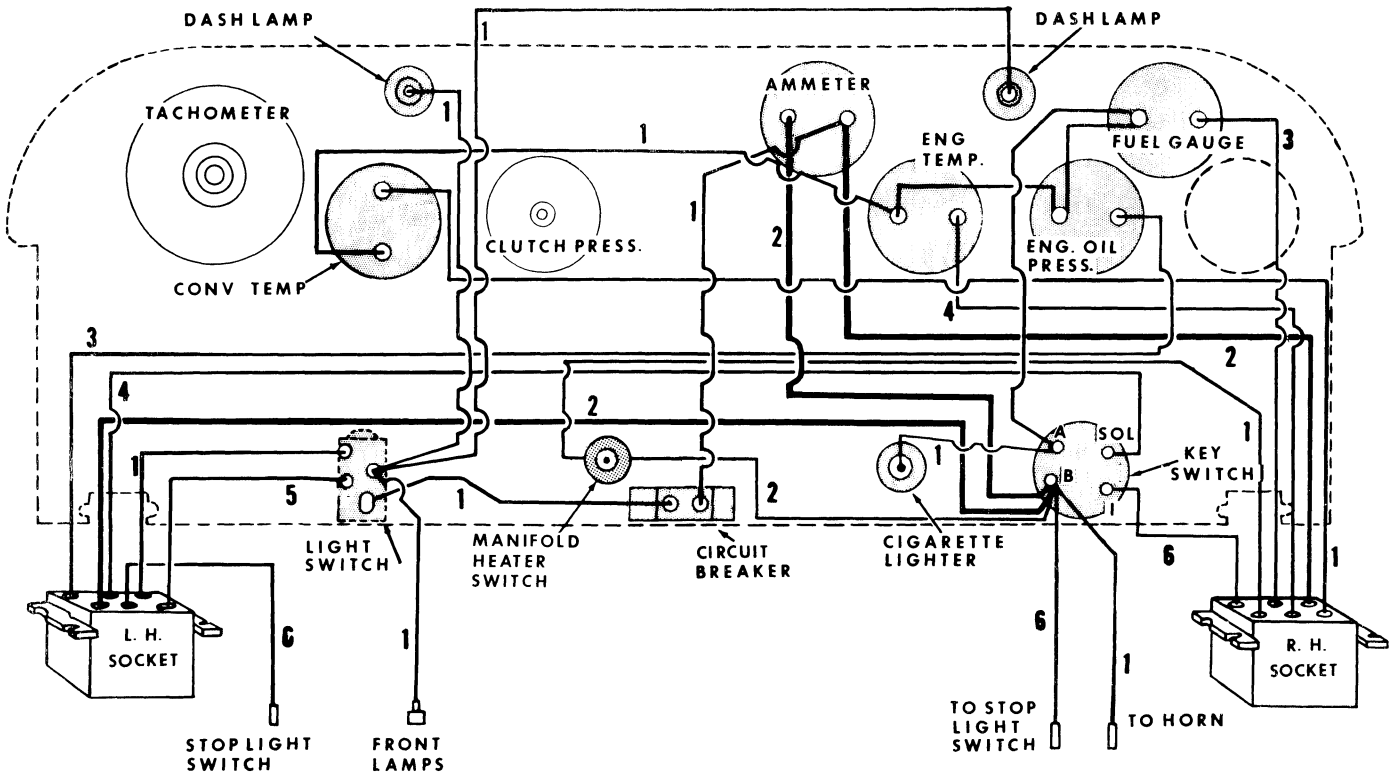

WIRE COLOR CODE

1 BLACK
2 RED
3 WHITE
4 GREEN
5 YELLOW
6 BLUE

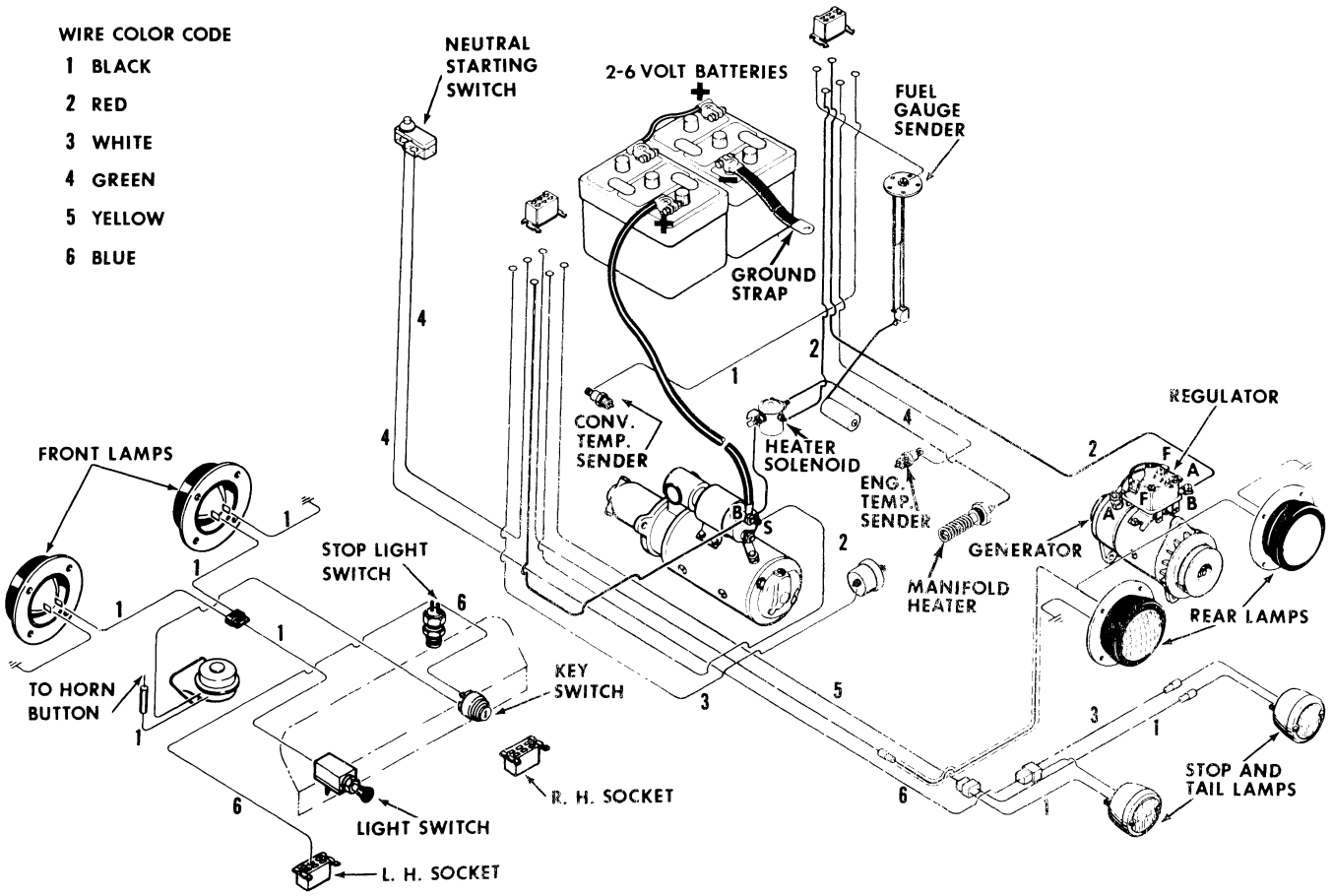

W7 GASOLINE ELECTRICAL SYSTEMS
With Individual Gauges and Alternator

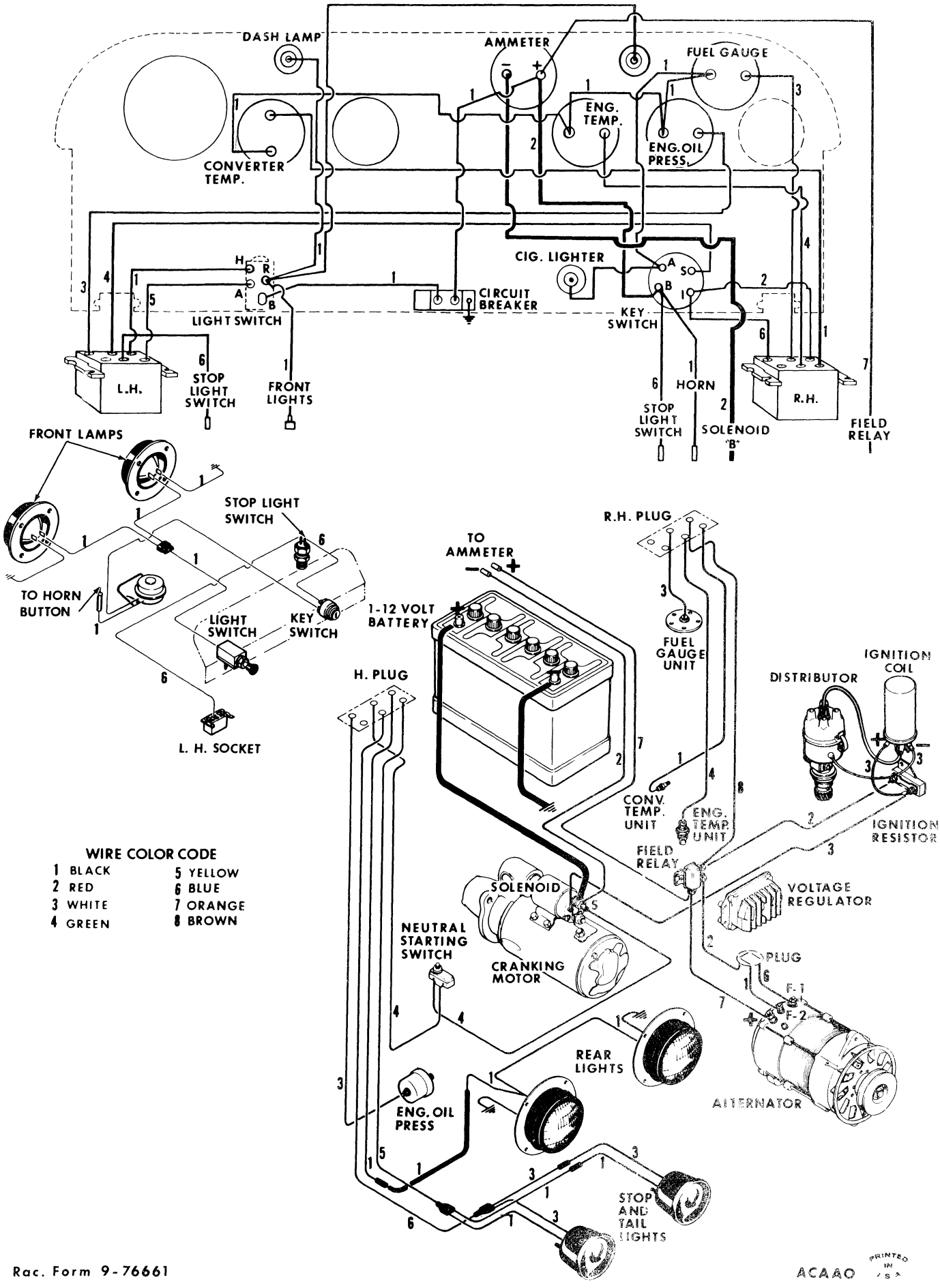

WIRE COLOR CODE

1 BLACK	5 YELLOW
2 RED	6 BLUE
3 WHITE	7 ORANGE
4 GREEN	8 BROWN

ACAAO PRINTED IN U.S.A.

W7 DIESEL ELECTRICAL SYSTEMS
With Individual Gauges and Alternator

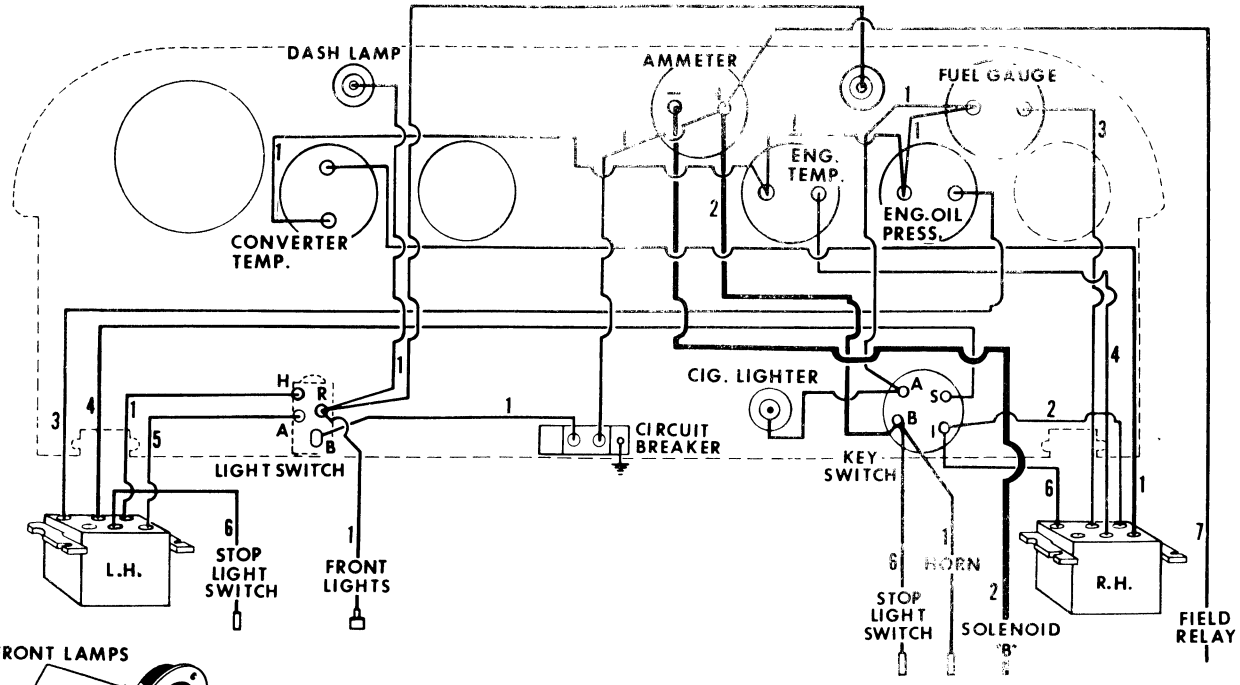

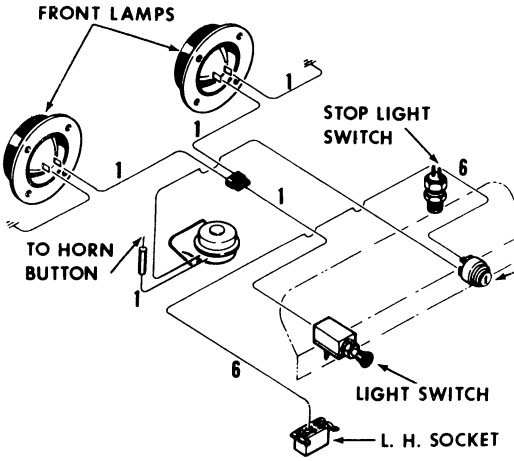

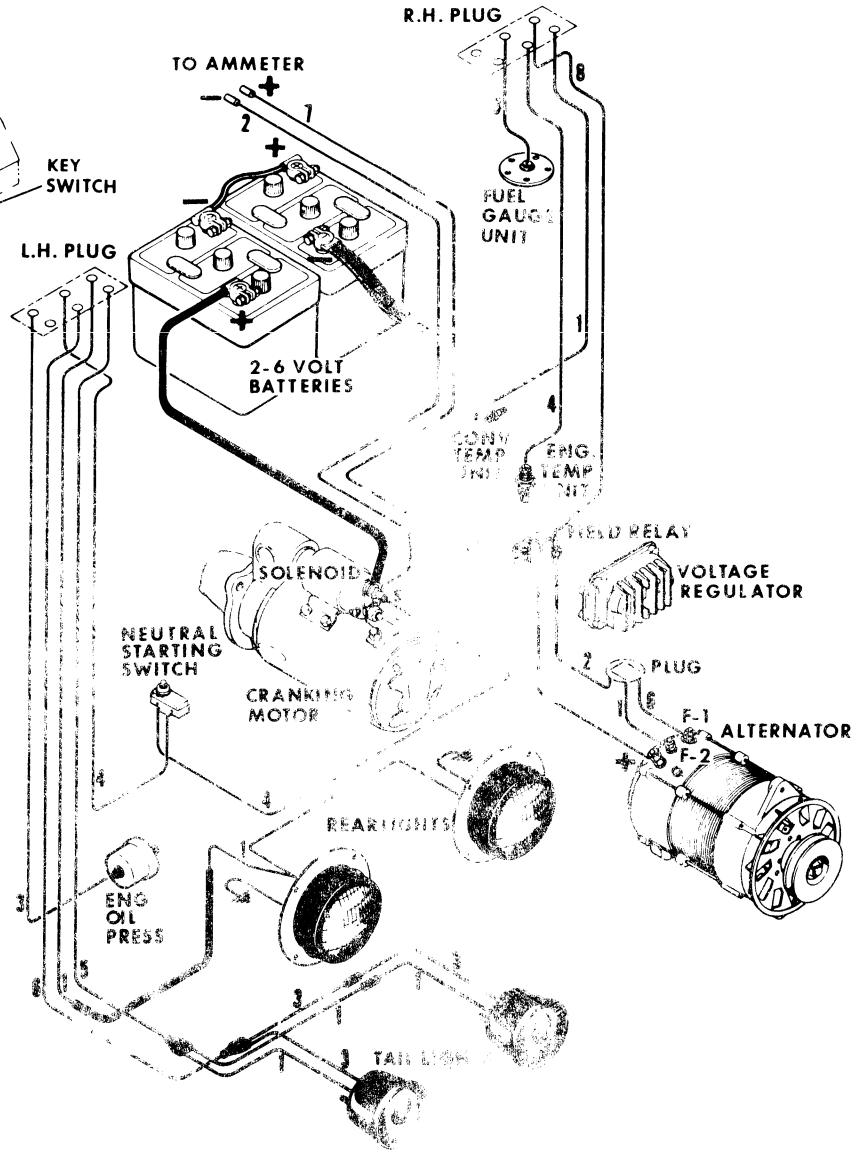

WIRE COLOR CODE

1 BLACK	5 YELLOW
2 RED	6 BLUE
3 WHITE	7 ORANGE
4 GREEN	8 BROWN

SECTION

3D

SERVICING THE

MODEL

" 32 "

BACKHOE

ON

CASE 4 WHEEL DRIVE

UNIT LOADERS

Rac. Form 9-75091

PRINTED IN U.S.A.

TABLE OF CONTENTS

1. Backhoe Specifications 3D-3
2. Backhoe Serial Number Location 3D-3
3. Backhoe Lubrication 3D-3
4. Backhoe Hydraulic Control Valve 3D-5
5. Diverter Valve 3D-18
6. Checking and Adjusting Backhoe Main Relief Valve 3D-19
7. Backhoe Secondary (Load) Relief Valves 3D-20
8. Boom Drop Control (Flow Restrictor) 3D-25
9. Hydraulic Cylinders 3D-25
10. Servicing Backhoe 3D-32
11. Hydraulic System Trouble Shooting Chart 3D-37
12. Schematic Illustration 3D-42



Figure 1 - Model "32" Backhoe

1. BACKHOE SPECIFICATIONS

ENGINE SPEEDS FOR BACKHOE OPERATION

Model	Pump Output	Engine Speed
W-7	20 G.P.M.	1500 R.P.M.
W-9A	20 G.P.M.	1100 R.P.M.
W-9 Series B	20 G.P.M.	1350 R.P.M.
W-10	20 G.P.M.	900 R.P.M.

IMPORTANT: Running the Loader engine in excess of the speeds shown in the table above will cause excessive heating of the oil. This can cause damage to the "O" ring seals and cylinder packing, and cause the breakdown of the hydraulic oil resulting in improper lubrication for moving parts of the hydraulic system components.

HYDRAULIC SYSTEM

Hydraulic Control Valve . . . . . 6 spool parallel circuit control valve
Hydraulic Oil Lines . . . . . Steel tubing and steel wire mesh braid hose
Main Relief Valve Pressure . . . . . 1750 to 1850 P.S.I.
Oil Recommendations . . . . . Case Hi-Lo TCH

HYDRAULIC CYLINDERS

Type . . . . . Double-acting with chrome plated piston rods
Boom Cylinder . . . . . 4 x 39-3/16 Inch Stroke, 2 Inch Piston Rod
Crowd Cylinder . . . . . 4 x 32 Inch Stroke, 2 Inch Piston Rod
Bucket Cylinder . . . . . 3-1/2 x 27-1/4 Inch Stroke, 1-3/4 Inch Piston Rod
Swing Cylinders . . . . . 4 x 11 Inch Stroke, 1-3/4 Inch Piston Rod
Stabilizer Cylinders . . . . . 3-1/2 x 16-3/8 Inch Stroke, 1-3/4 Inch Piston Rod

2. BACKHOE SERIAL NUMBER LOCATION

When ordering parts for the Model "32" Backhoe, always specify the Backhoe serial number. The serial number plate is located on the left hand side of the valve shield.

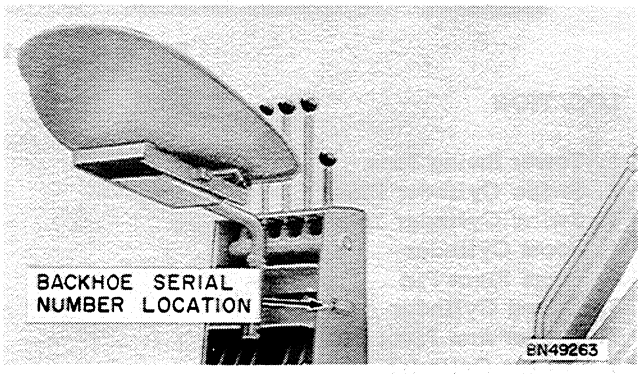

Figure 2 - Backhoe Serial Number Location

3. BACKHOE LUBRICATION

The following lubrication information is presented as a guide for the serviceman. Complete lubrication information is shown in the Operator's Manual.

RECOMMENDED LUBRICANT

Pressure Fittings . . . Lithium "soap-base" grease
Grade Recommendations (Winter) . . . . . #1
(Summer) . . . . . #2
(Tropical Areas) . . . #3

PRESSURE FITTINGS

Before applying a grease gun to pressure fittings, wipe all accumulated dirt from each fitting tip.

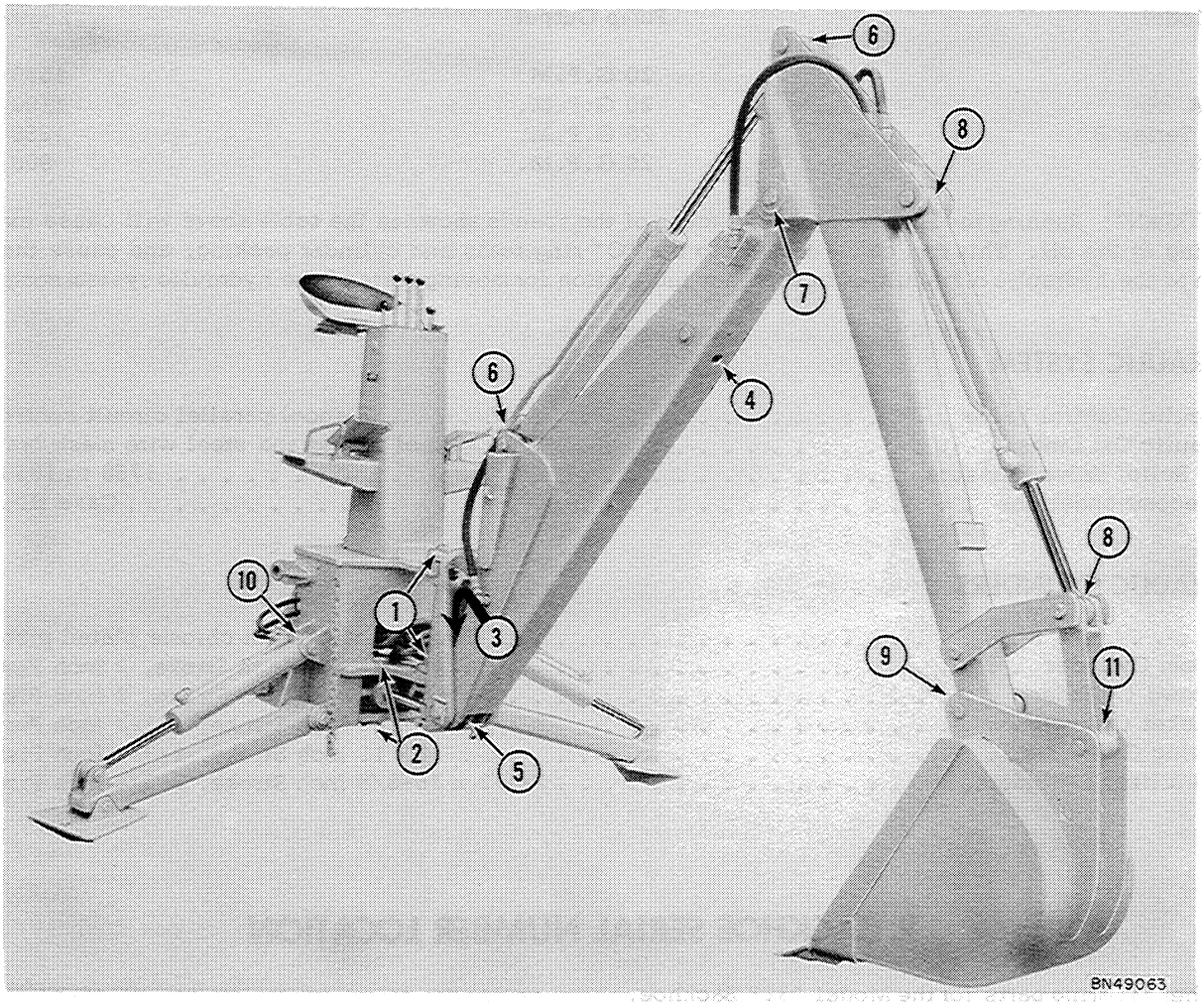

Figure 3 - Backhoe Lubrication Fittings

LOCATION	NO. OF FITTINGS	TIME INTERVAL
1. Tower Swing Pins	1 top, 1 bottom	10 Hours
2. Swing Cylinder Pins	*2 each side	10 Hours
3. Swing Cylinder Yokes	1 each side	10 Hours
4. Boom Cylinder	1 each end	10 Hours
5. Boom Pivot Pin	1	10 Hours
6. Crowd Cylinder	1 each end	10 Hours
7. Dipper Arm Pivot Pin	1	10 Hours
8. Bucket Cylinder	1 each end	10 Hours
9. Bucket Pivot Pin	2	10 Hours
10. Stabilizer Cylinders	1 upper end	10 Hours
11. Bucket Dump Link	1	10 Hours

*Some units 1 each side.

4. BACKHOE HYDRAULIC CONTROL VALVE

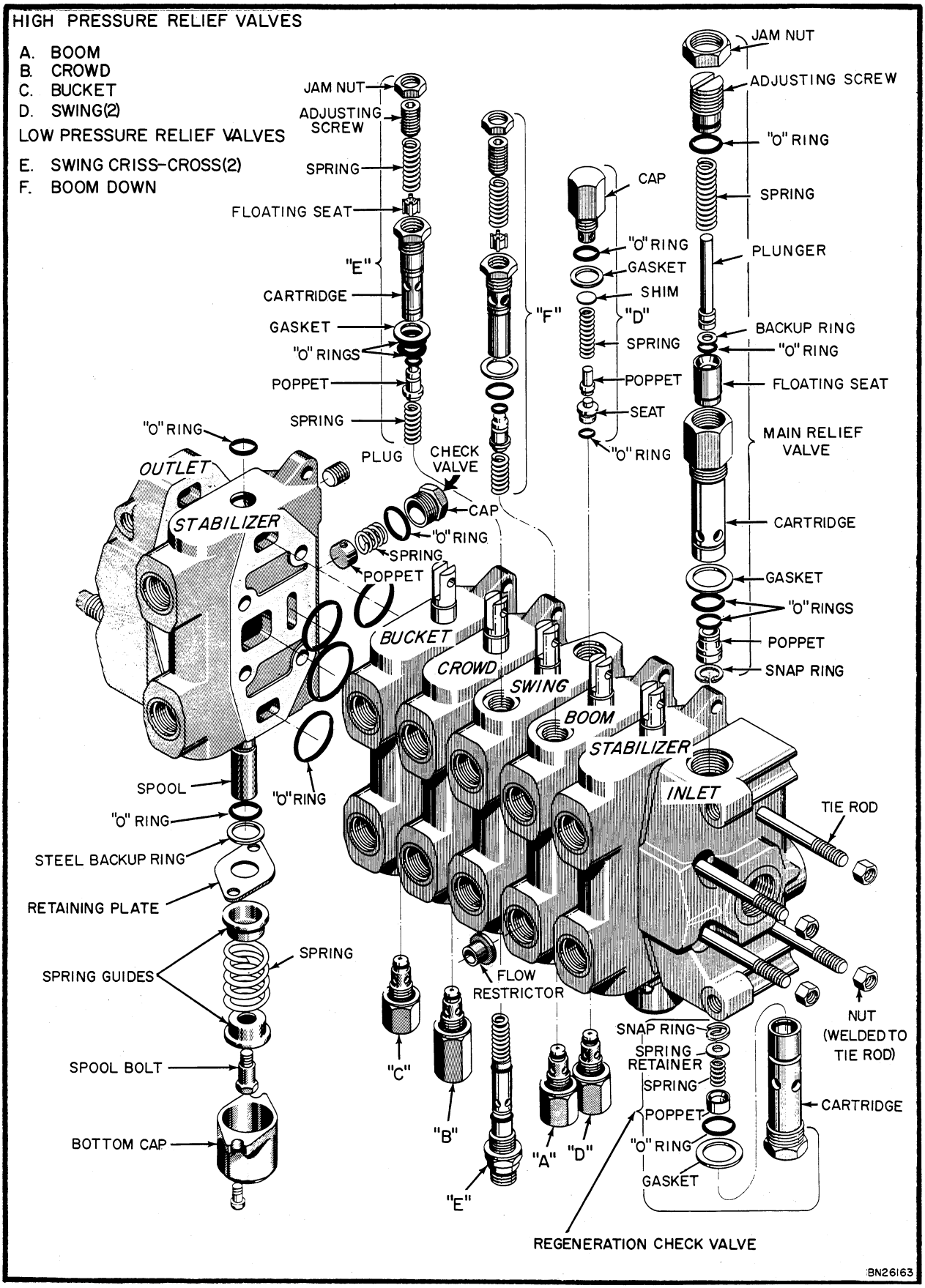

Figure 4 - Exploded View of Backhoe Control Valve

BACKHOE VALVE OPERATION

The backhoe valve is referred to as an "open center, parallel circuit, valve." As the name implies, the valve has one circuit clear through the center of the valve (Circuit 1A). It has a tributary circuit running parallel to it that dead ends against the end section (circuit 1B), see Figures 5 and 6.

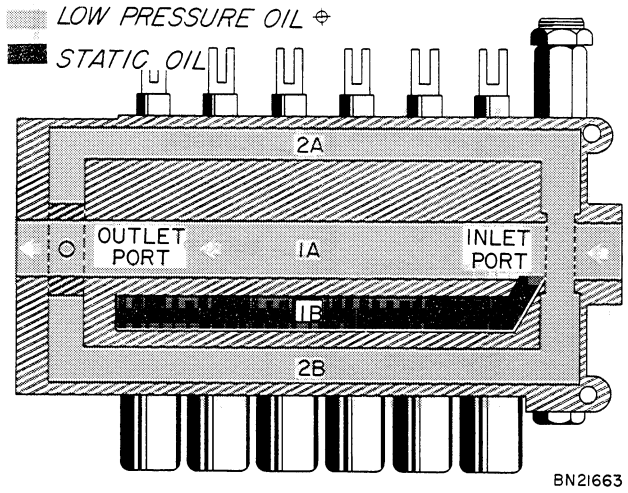

Figure 5 - Backhoe Valve Circuits

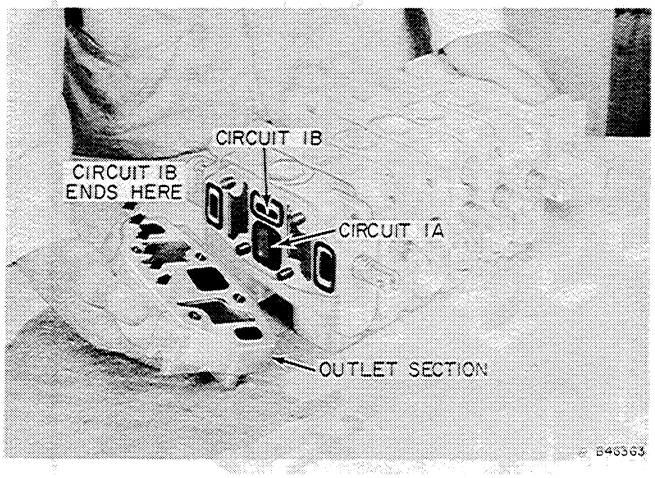

Figure 6 - Backhoe Valve Circuits

The open center parallel circuit valve provides oil to each valve section through circuits 1A and 1B. When a spool is actuated, circuit 1A is blocked off to the following sections. However, circuit 1B is also charged with oil and supplies oil to each succeeding valve section, see Figure 7.

When succeeding spools are pulled, the cylinder with the least resistance will move first and continue to move until it meets more resistance than other cylinders that are actuated. When spools are open to cylinders of the same resistance, both cylinders will move. Example: The stabilizers spools are at opposite ends of the backhoe valve bank. When both spools are pulled, both stabilizers will retract at the same time. However, if a man stands on one stabilizer pad, the opposite cylinder will move until it bottoms out. Then, the remaining cylinder will retract.

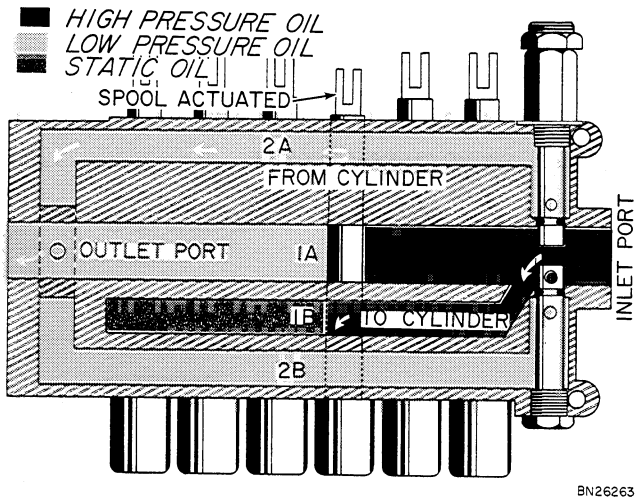

Figure 7 - Backhoe Valve Oil Flow Spool Actuated

MAIN RELIEF VALVE AND REGENERATION CIRCUIT

The valve has an additional circuit — the relief valve (Circuit 2A) and regeneration circuit (Circuit 2B), see Figure 8.

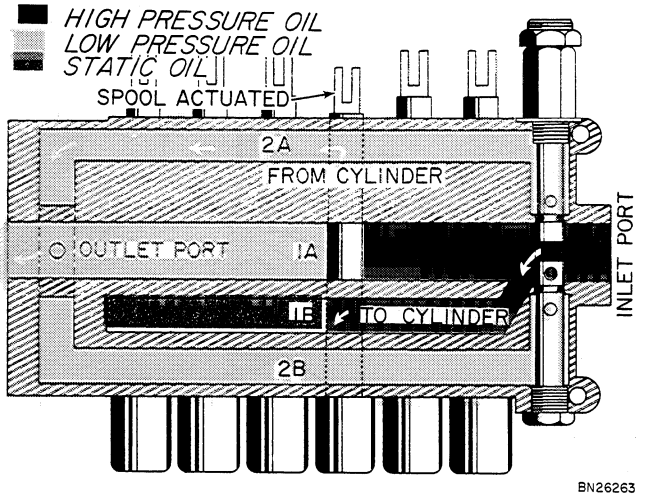

Figure 8 - Main Relief Valve and Regeneration Check Valve Circuit

When a spool is actuated in either direction, the oil is diverted out through a port of the valve to operate a cylinder as follows. Circuit 1A is closed by the spool and the oil from the pump flows through circuit 1B and out a port of the valve to the cylinder. If the valve continued to receive oil from the pump and the cylinder was unable to move (bottomed or held by a load), some part of the hydraulic system would break.

To prevent this, a relief valve circuit (Circuit 2A) has been added to the valve. When the pressure of the oil being supplied by the pump reaches the specified pressure (1800 P.S.I.), the relief valve spring compresses and allows the oil to return to sump, see Figure 9.

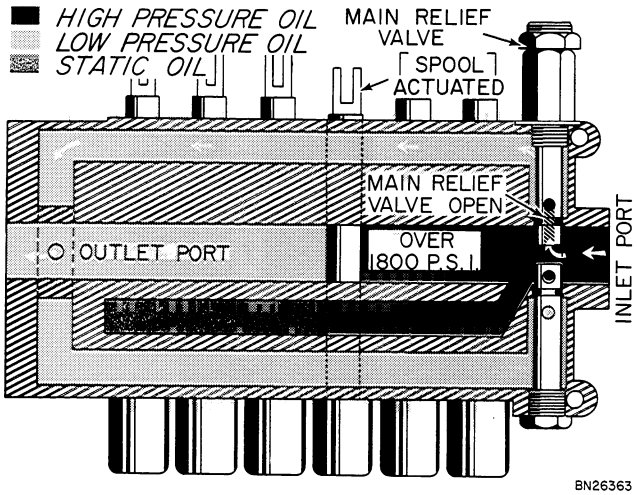

Figure 9 - Backhoe Valve — Main Relief Valve Circuit

When a cylinder is being actuated, oil from the opposite end is being returned via the relief valve circuit (2A) or the regeneration circuit (2B). If the cylinder movement on the applied side is faster than the pump can keep up with, a void is created in the applied side. This condition occurs when a weight on the end of the cylinder rather than the applied oil causes the piston to move. This condition is further complicated when the engine is running slowly because the pump output is in direct proportion to engine speed.

To prevent a void from forming in the cylinder and slowing the action of the Backhoe, the valve contains a built-in restrictor and check valve.

The restrictor in the valve creates a 200 P.S.I. back pressure on the oil returning to sump from the cylinder by restricting the flow. When the weight on the end of the cylinder causes the piston to move rather than the applied oil, there is a pressure drop in the circuit 1A. The 200 P.S.I. back pressure created by the sleeve then causes the check poppet to unseat and allows the oil returning from the cylinder to flow into circuit 1A to augment the pump output, see Figure 10.

HIGH PRESSURE SECONDARY RELIEF VALVES FOR DIGGING CYLINDERS

As one of the digging cylinders is actuated (boom, crowd, or bucket) when digging, "mechanical" pressure may be applied against one or both of the other cylinders. "Mechanical" pressure is created by the piston being forced against a solid column of oil when the spool is in neutral.

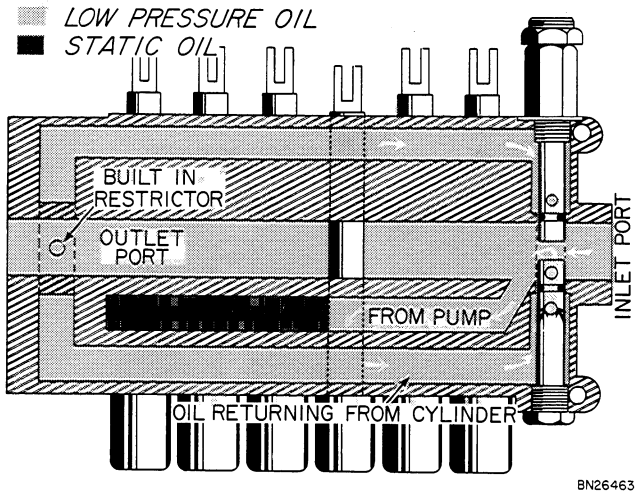

Figure 10 - Backhoe Valve — Regeneration Check Valve

To protect the digging cylinders against damage, high pressure secondary relief valves are located between the valve spool and the port leading to the cylinder to be protected. They allow the oil to flow only from the end of the cylinder into circuits 2A and 2B. These valves are set higher than the main relief valve and have a small orifice which allows the oil to bleed off slowly to prevent a sudden collapse of the cylinder.

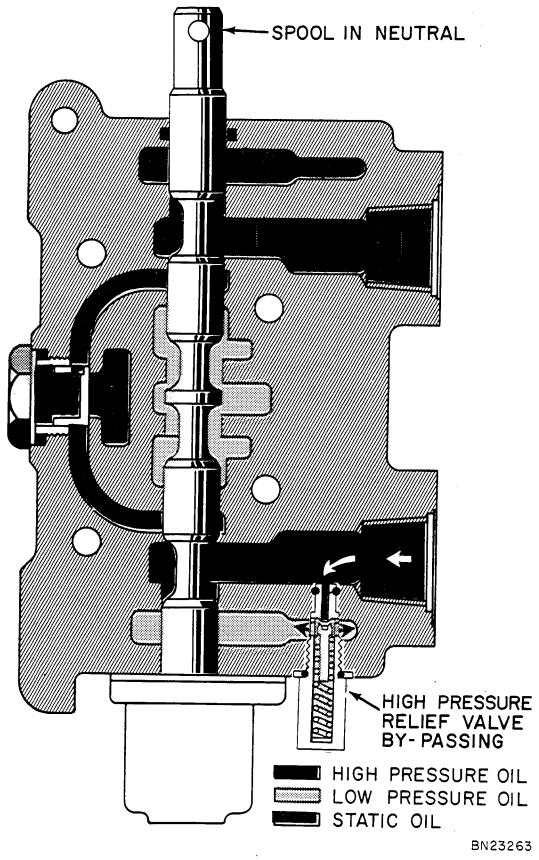

Figure 11 - High Pressure Secondary Relief Valve Actuated

LOW PRESSURE SECONDARY RELIEF VALVE FOR BOOM DOWN PRESSURE

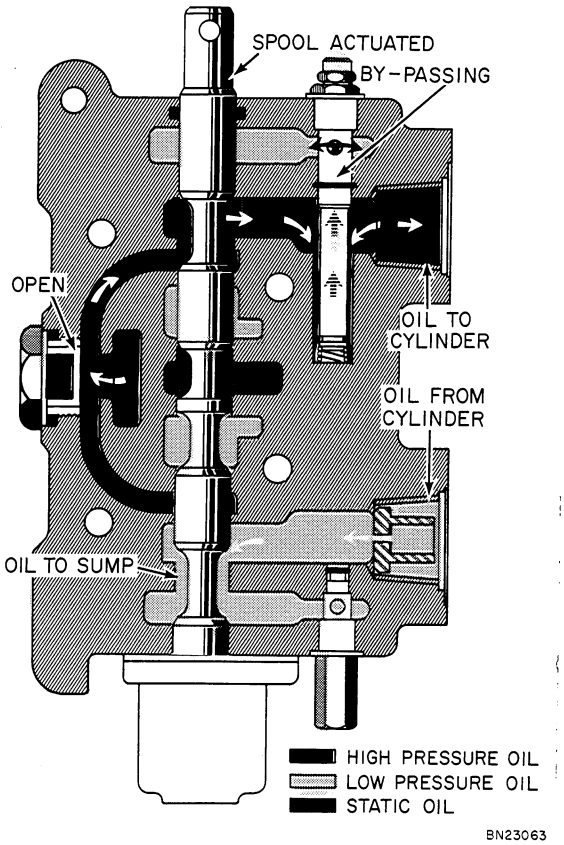

Figure 12 - Low Pressure Secondary Relief Valve Actuated

This relief valve has a dual-purpose: (1) While the boom is being lowered under hydraulic pressure, the relief valve will open when the specified pressure is reached, thus protecting Backhoe from damage; (2) As the dipper arm and bucket are being retracted while digging, under certain operating conditions pressure will be placed on the boom, tending to force it upward. The same relief valve will open, allowing the boom to raise.

LOW PRESSURE SWING CRISS-CROSS RELIEF VALVES

As the boom is swung from side to side and the control pedal is returned to neutral, the relief valve will open, allowing oil to transfer to the opposite swing circuit and avoiding abrupt stopping of boom. When the boom is swung against the stops with the control pedal held down or when excessive force is applied against the direction of the swing, these relief valves will by-pass, diverting oil back to the sump, see Figure 14.

HIGH PRESSURE SWING RELIEF VALVES

Under certain conditions, the geometry of the swing cylinders is such, that as the boom is swung from side to side and the pedal is returned to neutral position, more oil is displaced by one cylinder. The relief valve then opens allowing excess oil to return to sump through circuit 2A and 2B, see Figure 15.

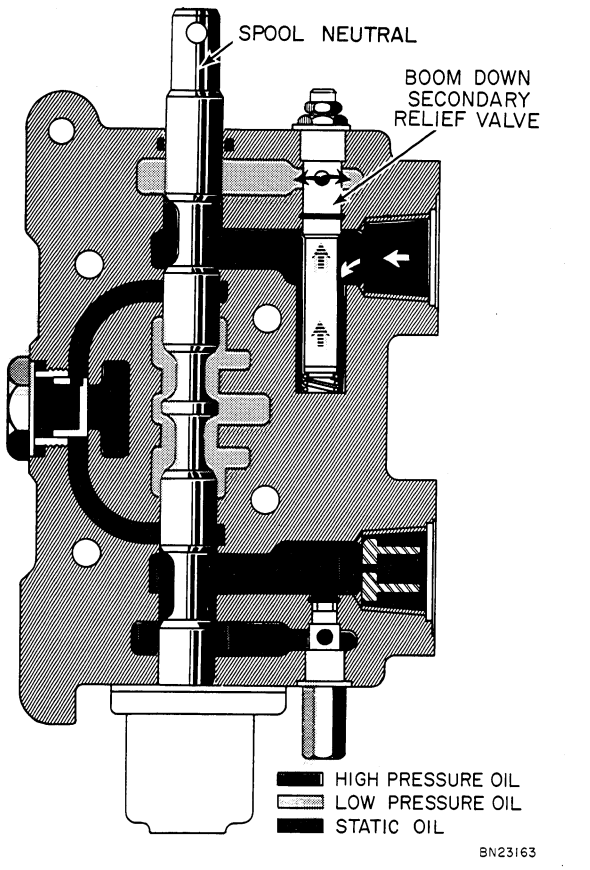

Figure 13 - Low Pressure Secondary Relief Valve Actuated

LOAD CHECK VALVES

As a spool is actuated slightly, "feathered", the load may tend to force oil out of the applied side of the cylinder because the pressure supplied by the pump is not as great as that created by the load. To eliminate this, each spool has a load check valve. This is a one-way check valve which permits oil from the pump to flow into the cylinder, but keeps the oil from the applied side of the cylinder from flowing back through the valve, see Figure 12.

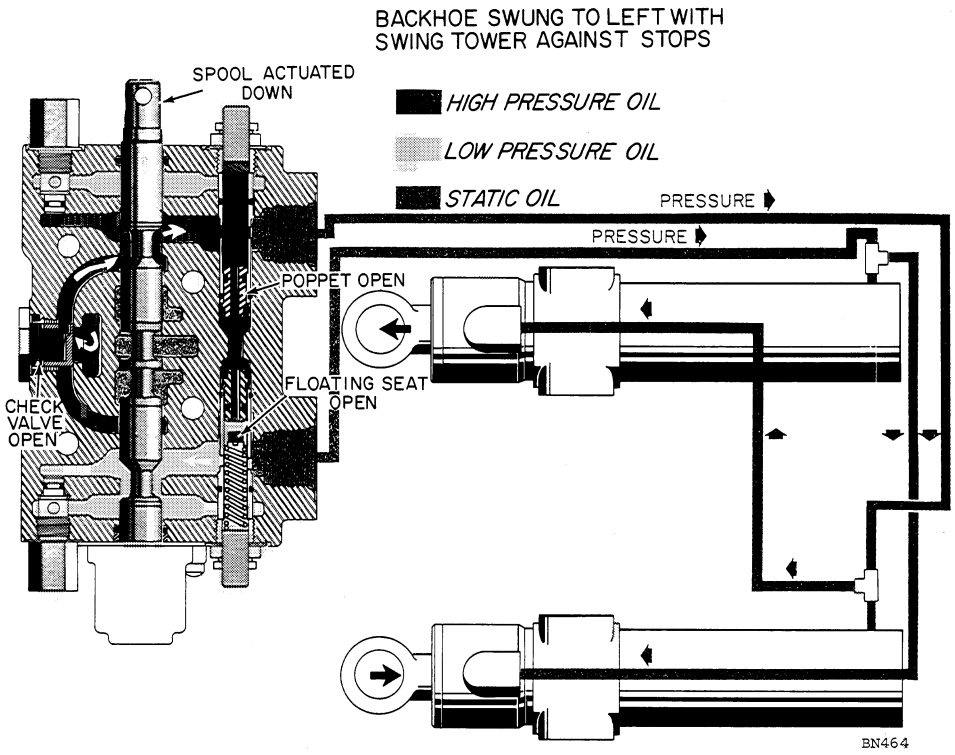

Figure 14 - Swing Criss-Cross Relief Valves Actuated

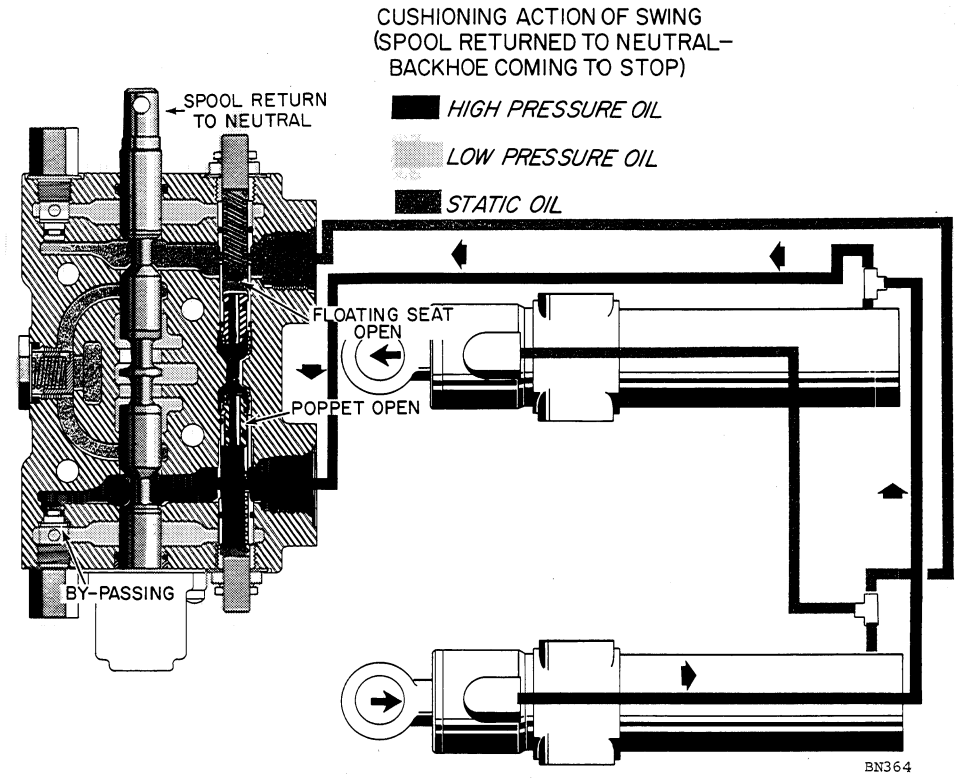

Figure 15 - Swing High Pressure Relief Valves Actuated

REMOVING VALVE FROM BACKHOE

REFERRING TO FIGURE 16: The backhoe control valve is attached to the control tower by means of three hex. head cap screws.

Clean exterior of valve thoroughly to eliminate the possibility of entrance of dirt into the system. Lower all components on the Backhoe to ground level. With the engine shut off, put each control lever through several operational cycles to equalize pressures within the system.

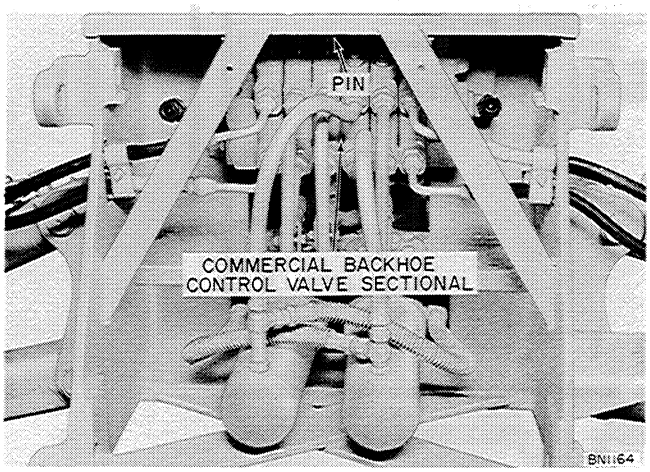

Figure 16 - Backhoe Control Valve Location

Before removing the valve, tag and number the hoses that connect to the tubes at the valve, starting at the relief valve end. First spool: top port #1 — bottom port #2; second spool top port #3 — bottom port #4; etc.

Clean the tube ends and disconnect the tubes from the valve and hoses. Disconnect the swing cylinder hoses at the fittings on the front of the swing cylinders.

CAUTION: DO NOT ALLOW ENTRANCE OF FOREIGN MATERIAL OF ANY KIND INTO HOSES OR VALVE.

Disconnect the inlet and outlet hoses at the quick disconnects, and then at the valve fittings. Remove the control rod pins from the valve spools.

Remove valve mounting bolts (three). Lift the valve forward and up past the operator's seat.

REMOVING MAIN RELIEF VALVE

REFERRING TO FIGURE 17: Remove the main relief valve from the inlet section.

REFERRING TO FIGURE 18: Loosen jam nut and using a large screw driver, remove the adjusting screw from the cartridge. Inspect "O" rings for extrusion, nicks, etc.

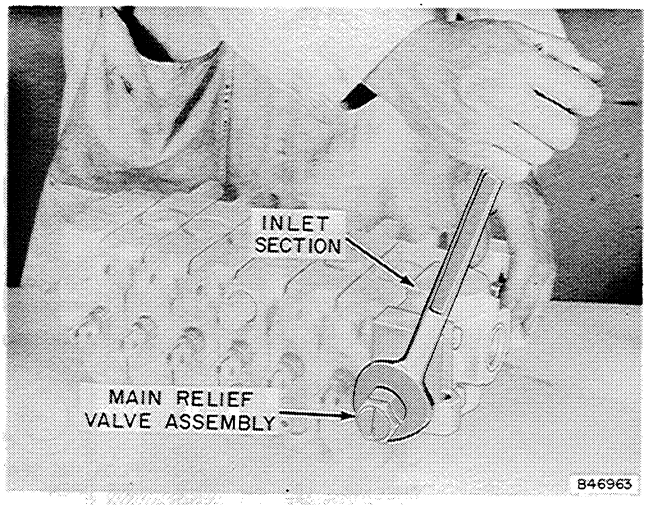

Figure 17 - Main Relief Valve

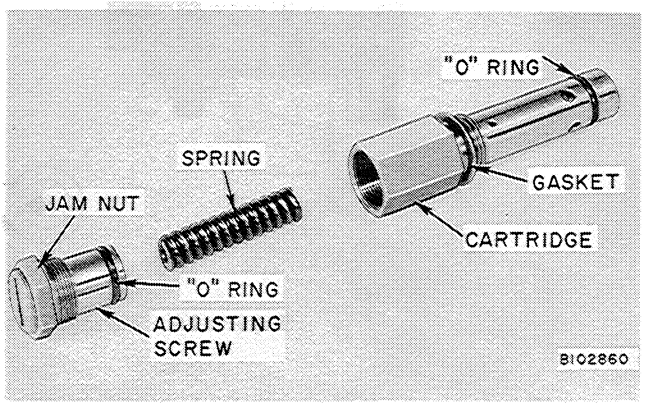

Figure 18 - Disassembling Main Relief Valve

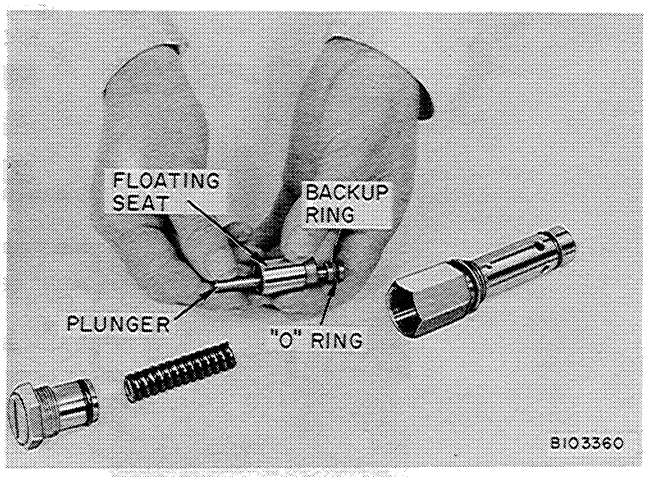

Figure 19 - Floating Seat and Plunger

REFERRING TO FIGURE 19: Slip floating seat assembly from cartridge. Push plunger and spring from floating seat. The plunger has an "O" ring and a back-up ring. Inspect "O" ring for nicks, extrusion, etc.

REFERRING TO FIGURE 20: Using a small screw driver, start SPIRAL snap ring from groove. Carefully pull snap ring from groove.

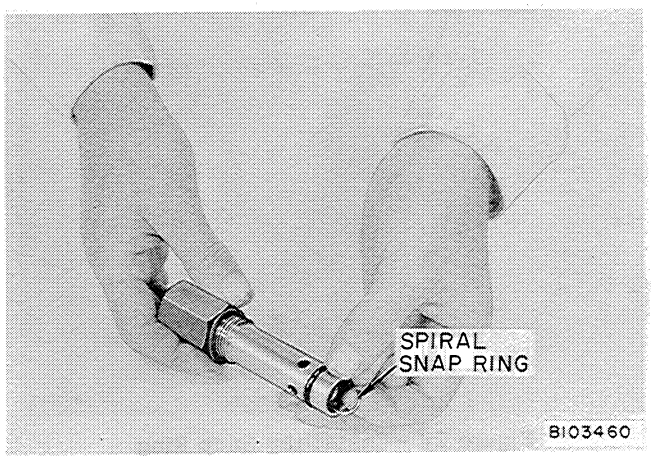

Figure 20 - Poppet Snap Ring

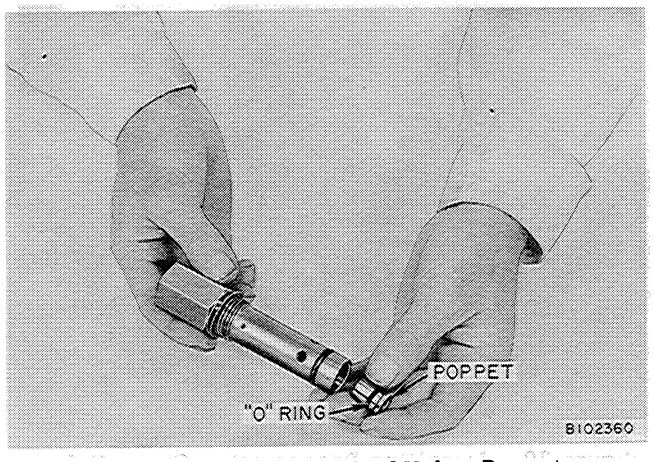

Figure 21 - Main Relief Valve Poppet

REFERRING TO FIGURE 20: Slip poppet out of bottom cartridge. Inspect "O" ring for nicks, extrusion, etc.

INSTALLING MAIN RELIEF VALVE

REFERRING TO FIGURE 21: Lubricate "O" ring and poppet with light oil, and holding poppet straight, slide it into position.

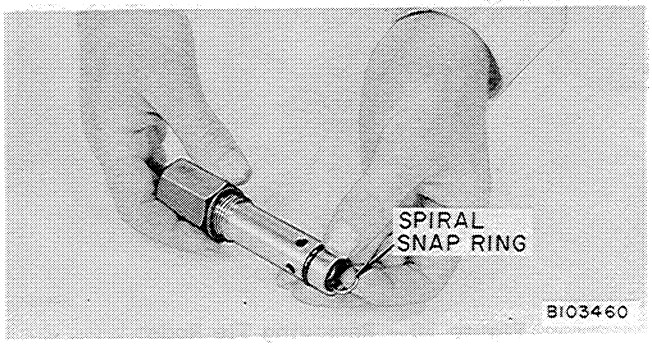

Figure 22 - Installing Poppet Snap Ring

REFERRING TO FIGURE 22: Install spiral snap ring. If original ring was distorted during removal, a new ring should be installed.

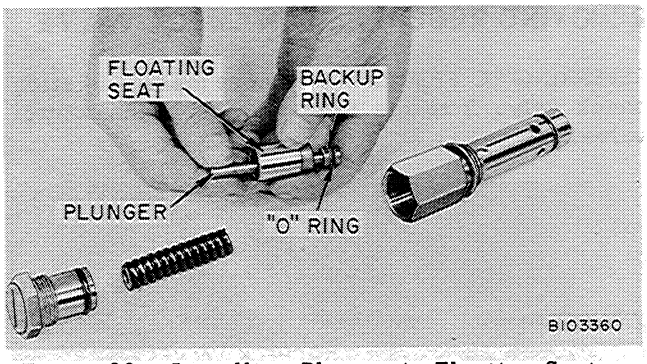

Figure 23 - Installing Plunger in Floating Seat

REFERRING TO FIGURE 23: If original "O" ring or back-up ring was found to be damaged, lubricate the new parts with light oil and install. Push well lubricated poppet into floating seat.

Install well lubricated assembly into bore of relief valve cartridge.

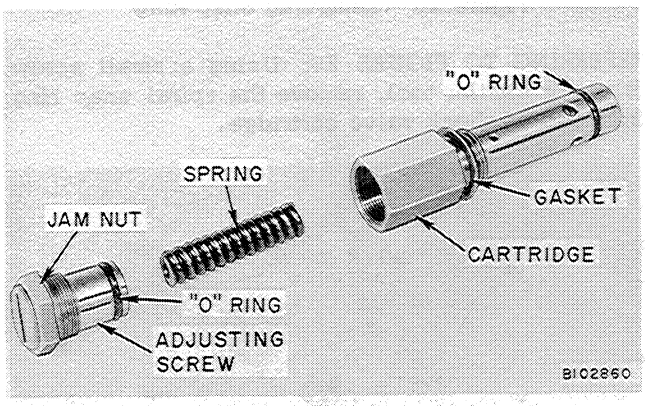

Figure 24 - Installing Spring and Adjusting Screw

REFERRING TO FIGURE 24: Install main relief valve spring in cartridge. Replace adjusting screw "O" ring if original was found to be damaged. Place adjusting screw in cartridge and screw down two turns. FINAL ADJUSTMENT MUST BE MADE AFTER VALVE HAS BEEN REINSTALLED. Insert the cartridge into the control valve.

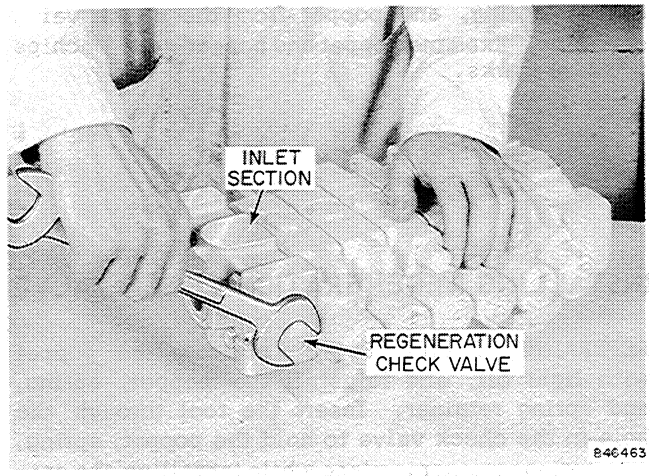

Figure 25 - Removing Regeneration Check Valve

REMOVING REGENERATION CHECK VALVE

REFERRING TO FIGURE 25: Remove the regeneration check valve from the inlet section of the control valve.

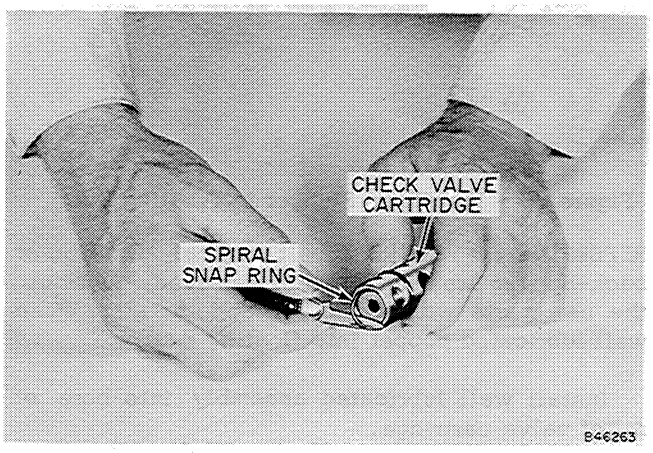

Figure 26 - Removing Snap Ring

REFERRING TO FIGURE 26: Using a small screw driver or similar tool, remove the spiral snap ring from end of check valve cartridge.

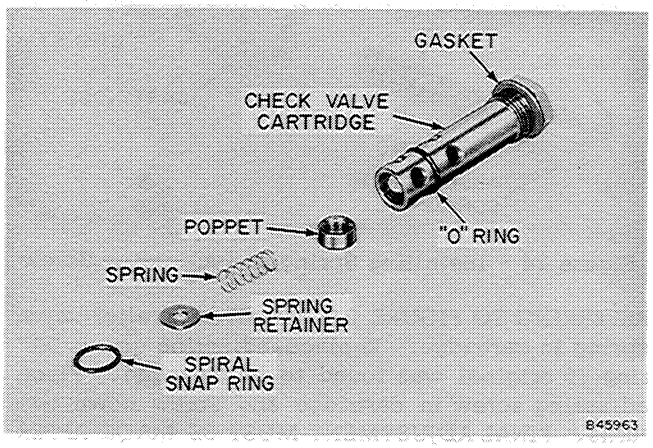

Figure 27 - Spring Retainer, Spring, and Poppet

REFERRING TO FIGURE 27: Remove the spring retainer, spring, and poppet from the check valve cartridge. Examine poppet and poppet seat for chips or score marks.

INSTALLING REGENERATION CHECK VALVE

REFERRING TO FIGURE 28: Lubricate the poppet with light oil, and reinstall the poppet, spring, and spring retainer. Insert the tool through the hole in the check valve to hold the poppet, spring, and spring retainer in place while installing the spiral snap ring.

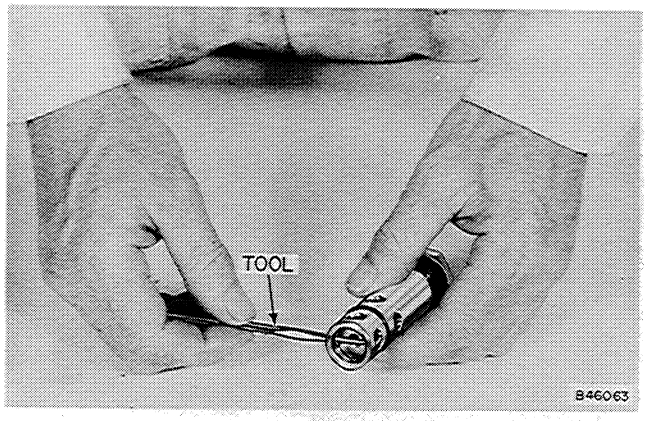

Figure 28 - Installing Snap Ring

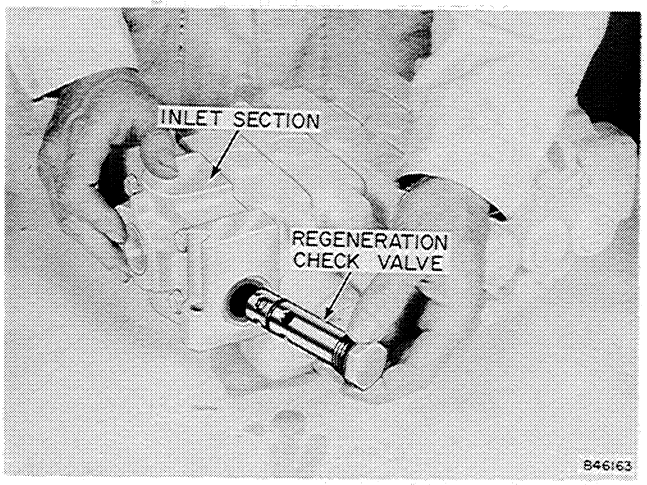

Figure 29 - Installing Regeneration Check Valve

REFERRING TO FIGURE 29: Inspect the "O" ring and gasket on the cartridge, and insert the cartridge in the control valve.

DISASSEMBLING VALVE SECTION

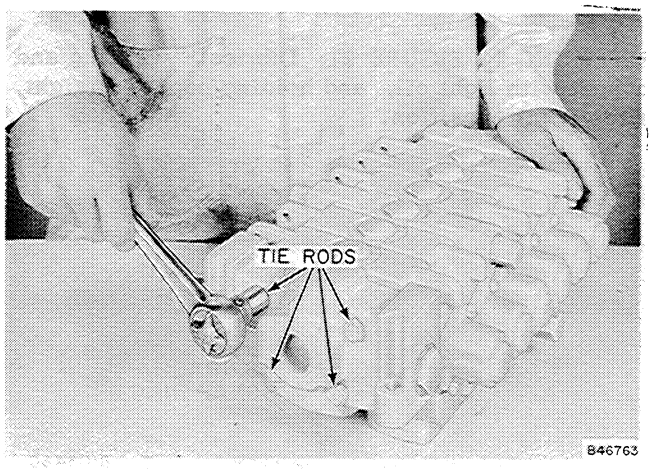

Figure 30 - Removing Tie Rods

REFERRING TO FIGURE 30: Each tie rod has a nut welded to the end. Therefore, the rods will turn out of the opposite end section. Then loosen four tie rods — DO NOT PULL FROM SECTIONS.

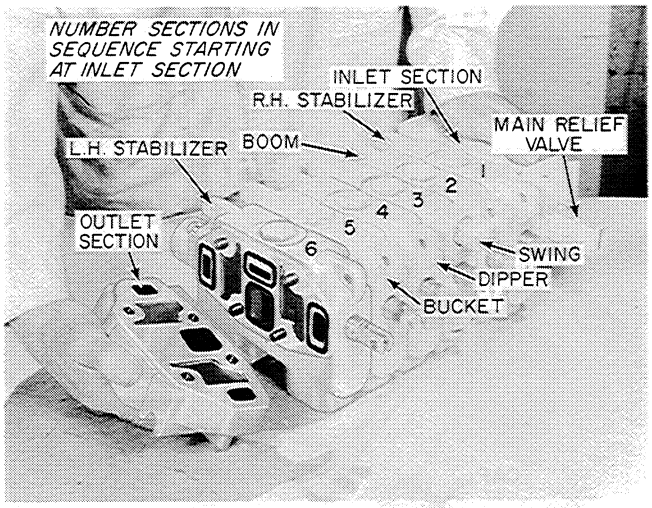

Figure 31 - Outlet Section of Valve Removed

REFERRING TO FIGURE 31: Starting at the inlet end, sequentially number all sections to ensure reassembly in exact, original order. Then slide section(s) off tie rods as required.

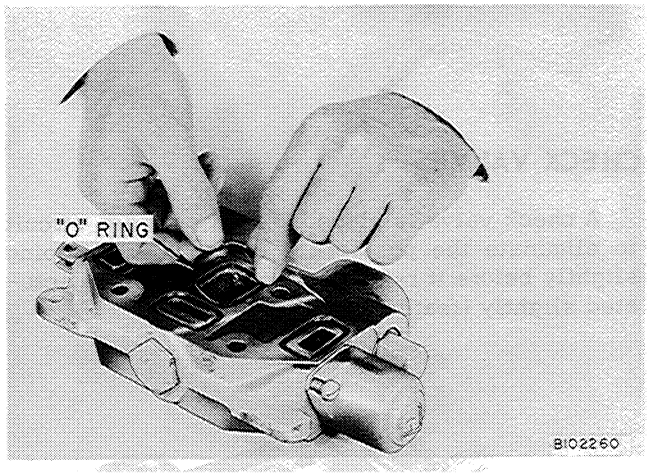

Figure 32 - Removing "O" Ring from Section

REFERRING TO FIGURE 32: Remove "O" rings (four) from each section and examine for nicks, extrusion, etc.

The valve spools in all sections are the same with two exceptions:

1. The spools are selective fit and must always be returned to the original section.

2. The swing spool has slightly different metering, due to a different chamfer on the spool lands. The chamfer is different to provide more positive control of the boom swing.

DISASSEMBLING SPOOL

REFERRING TO FIGURE 33: Remove bottom cap and spool retaining bolt, holding spool with 5/16 inch rod.

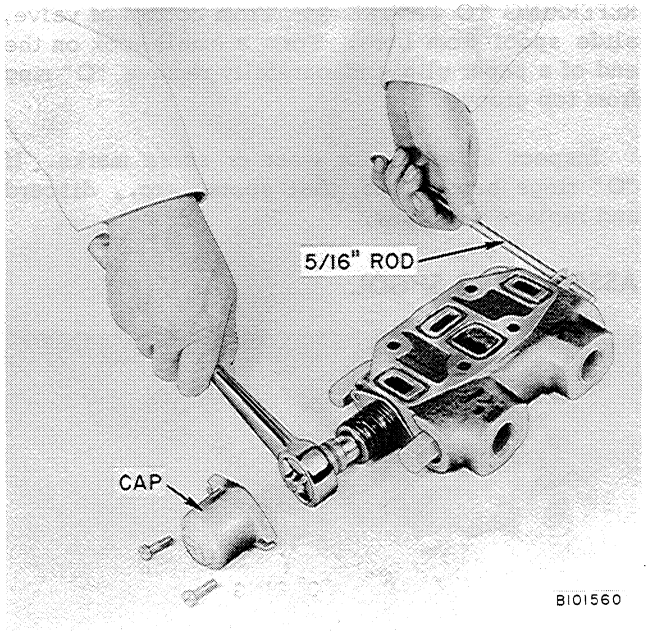

Figure 33 - Removing Spool Retaining Bolt

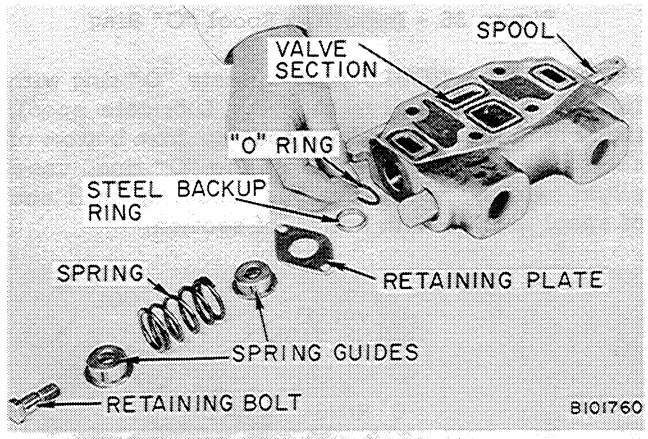

Figure 34 - Removing Spool Centering Parts

REFERRING TO FIGURE 34: Remove spring guides, spring, retaining plate, steel back-up ring and "O" ring.

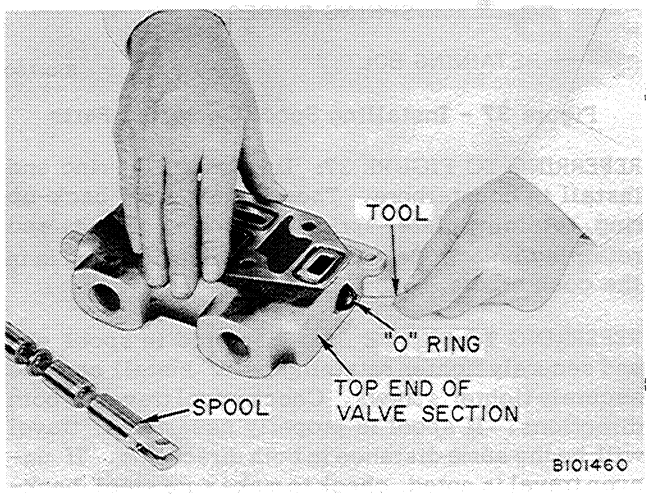

Figure 35 - Removing Top "O" Ring

REFERRING TO FIGURE 35: From bottom of valve, slide spool from bore. Form a small hook on the end of a paper clip and carefully remove "O" ring from top groove.

Inspect all parts for wear or score marks. If "O" rings have nicks, flat spots, etc., discard and replace with new.

ASSEMBLING SPOOL

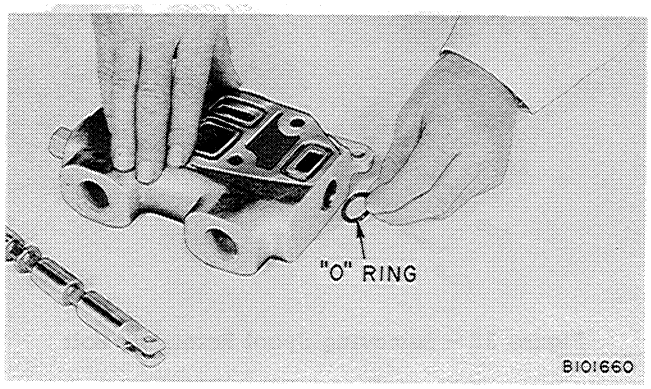

Figure 36 - Installing Spool "O" Ring

REFERRING TO FIGURE 36: Lubricate "O" ring with light oil and install in groove. Lubricate spool, then carefully slide valve spool up from bottom of section. When spool contacts the "O" ring, use a slight twisting motion and push spool up until end of spool is even with bottom of section.

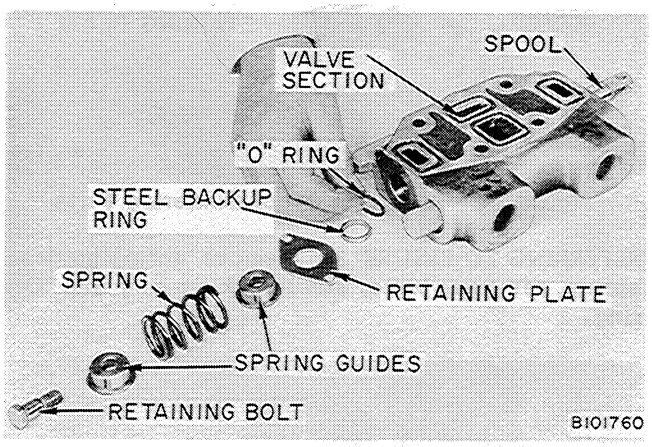

Figure 37 - Installing Spool Centering Parts

REFERRING TO FIGURE 37: Lubricate "O" ring and install in counterbore. Then install steel back-up ring, retaining plate, spring with spring guides, and retaining bolts. Be sure the steel back-up ring is in the counterbore.

REFERRING TO FIGURE 38: Place rod in spool eye and securely tighten retaining bolt. Install cap and securely tighten screws. Check spool travel in both directions. If spool is properly assembled, travel will be the same distance in both directions. If uneven travel is noted, check to make sure steel back-up ring is in counterbore.

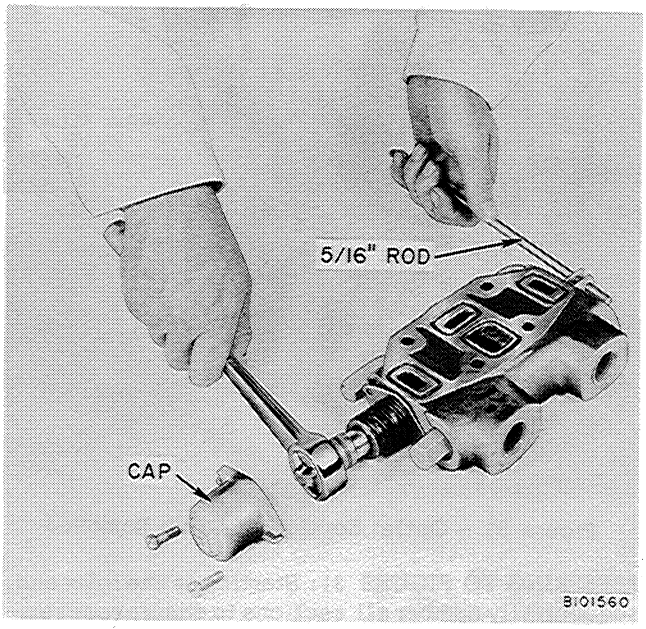

Figure 38 - Tightening Spool Centering Parts

CHECK VALVES

A check valve is placed in each cylinder circuit to eliminate the possibility of the load dropping slightly before it raises as a control lever is actuated slightly (feathered).

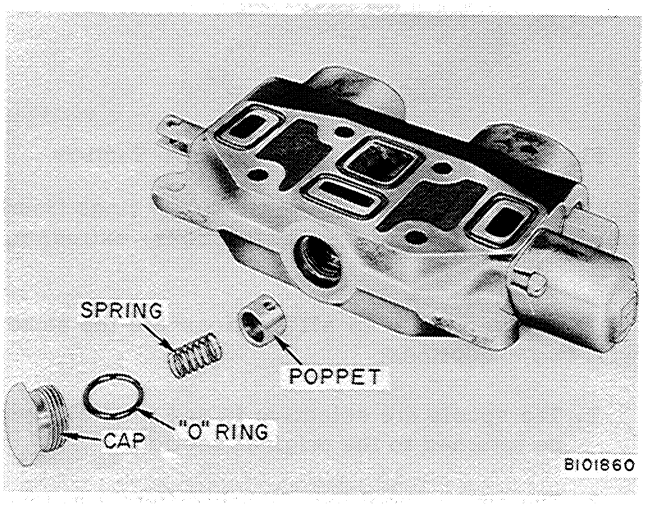

Figure 39 - Check Valve

REFERRING TO FIGURE 39: Remove cap, then inspect "O" ring for nicks, extrusion, etc. Examine poppet and poppet seat, for chips or score marks.

Install well lubricated "O" ring on cap and slip spring into poppet. Install poppet (with attached spring) in valve; then install cap and tighten securely.

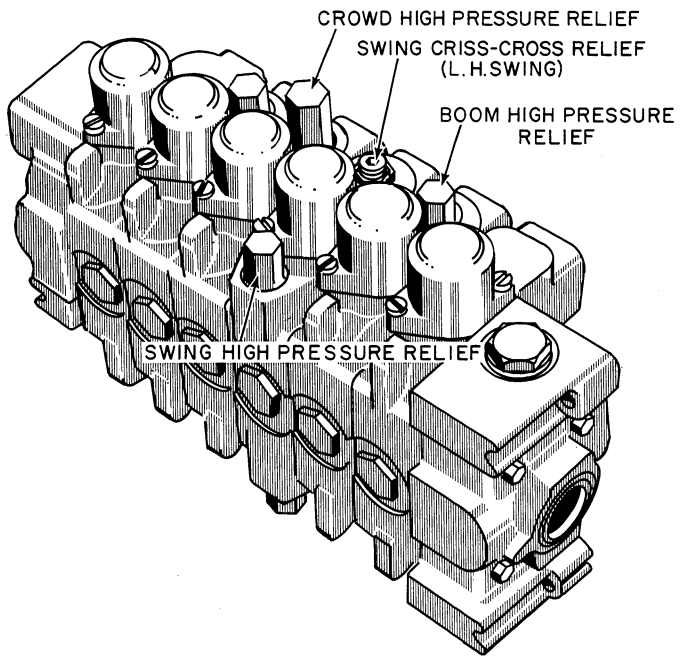

Figure 40 - Location of Secondary Relief Valves

SERVICING SECONDARY RELIEF VALVES (HIGH PRESSURE)

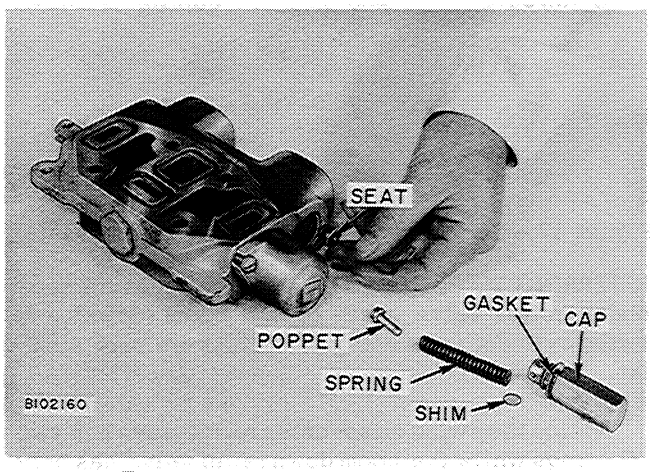

Figure 41 - Removing Valve Seat

REFERRING TO FIGURES 41 AND 42: Relief valves can be serviced with control valve either on or off machine. However, if control valve is on machine, tube to reservoir must be plugged to eliminate draining through relief valve hole.

Remove cap, spring, poppet and shims (if used). Inspect all parts and replace as required. The relief valve is serviced as a complete assembly only (cap, spring, poppet, and seat) except for gasket and "O" ring.

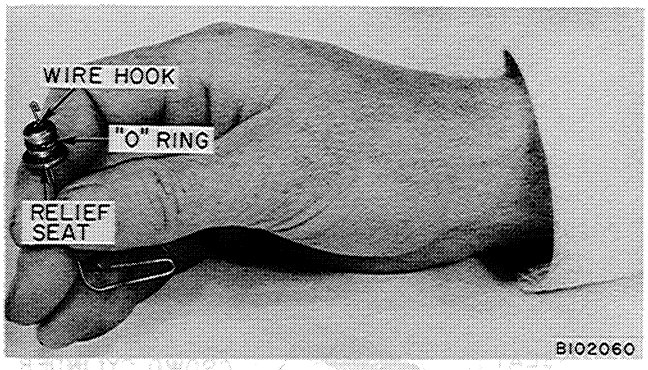

Figure 42 - Relief Valve Seat Removed

Relief valve seat is easily removed with wire hook and is held in place by fit of the "O" ring. Inspect "O" ring for nicks, extrusion, etc.

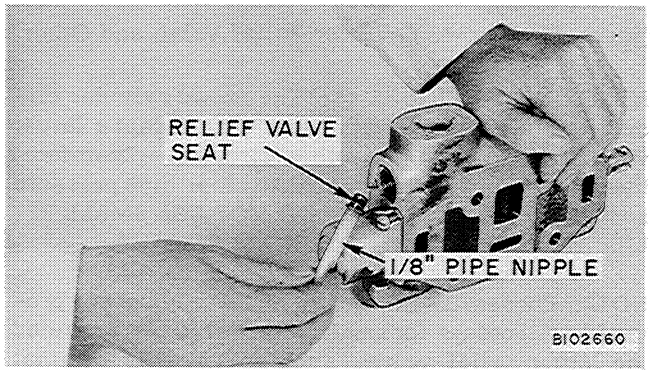

Figure 43 - Installing Relief Valve Seat

REFERRING TO FIGURE 43: If necessary, install new well lubricated "O" ring on seat. Fill end of tool (1/8 inch pipe nipple) full of grease and place seat on tool. Install seat in valve section. Do not allow seat to "cock" as it is pushed into place as the "O" ring may be damaged if seat is not installed "square".

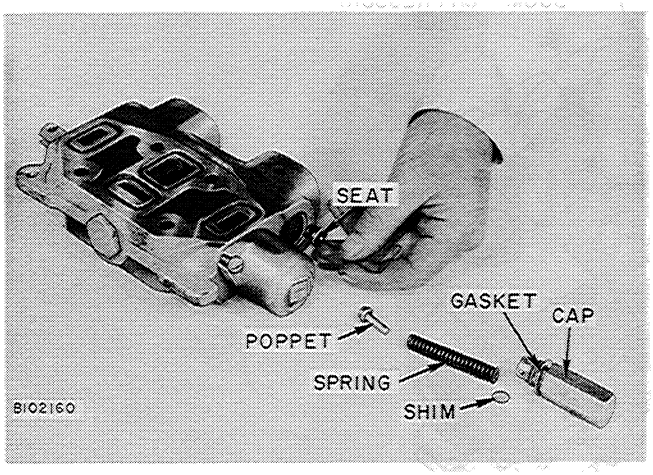

Figure 44 - Installing Cartridge Assembly

REFERRING TO FIGURE 44: Install poppet, spring, shims (if used), gasket, and cap; then tighten cap to 30 ft. lbs. maximum torque. Apply pressure to base of cap in much the same manner as tightening spark plugs.

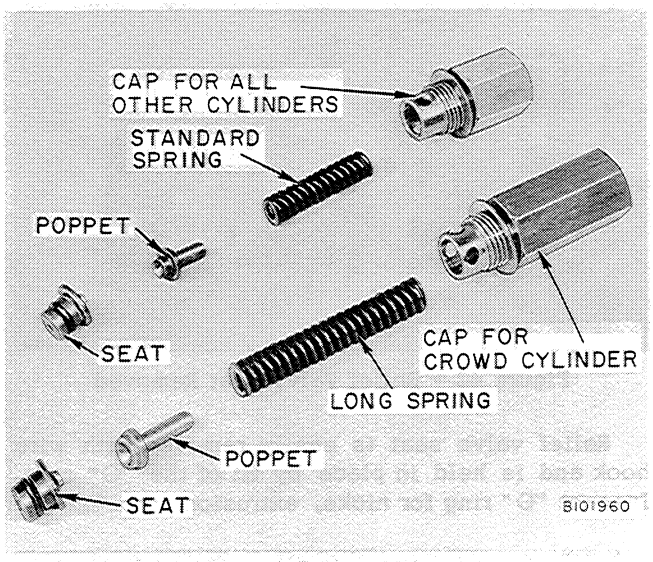

Figure 45 - Crowd Cylinder Relief Valve and Other Types

REFERRING TO FIGURE 45: The crowd cylinder circuit requires a relief valve that will accept a larger volume of oil than the other circuits. Therefore, the crowd relief is different than other high pressure secondary relief valves. DO NOT USE SMALL RELIEF VALVE IN CROWD CYLINDER CIRCUIT.

NOTE: For service, the small relief valve is not provided. All orders for small relief valve are provided the larger relief valve, such as used as original equipment in the crowd cylinder circuit.

SERVICING SECONDARY RELIEF VALVES (LOW PRESSURE)

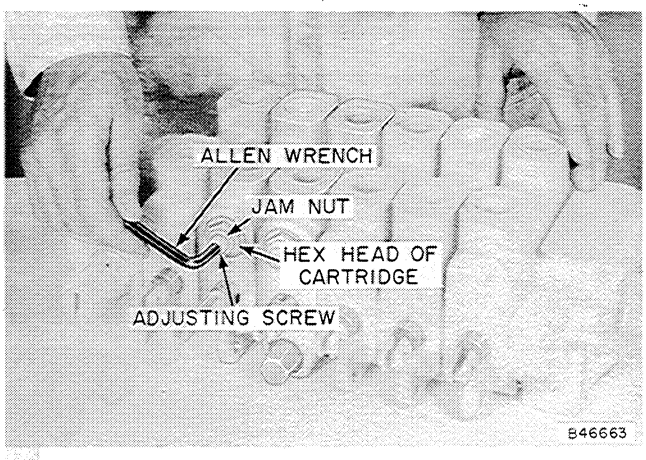

Figure 46 - Removing Secondary Relief Valve

REFERRING TO FIGURE 46: Loosen jam nut, then using an Allen wrench, remove adjusting screw.

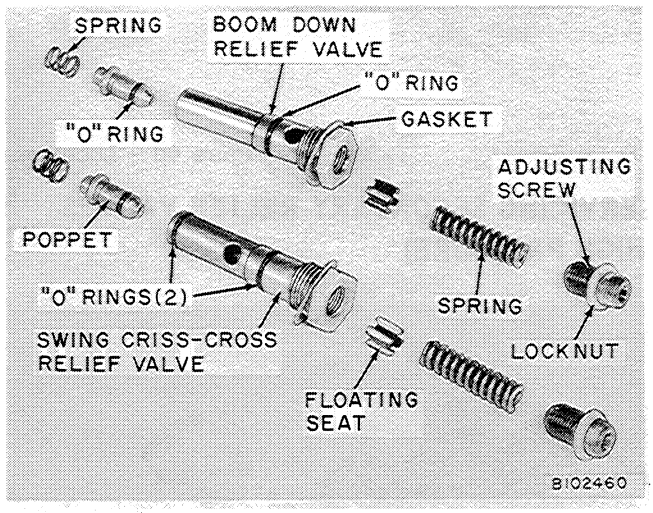

Figure 47 - Secondary Relief Valves (Low Pressure)

REFERRING TO FIGURE 47: The low pressure secondary relief valve used in the boom (down) and swing cylinder (criss-cross) circuits are very similar.

Notice the swing criss-cross relief valve has two "O" rings while the boom down relief valve has only one. In addition, the cartridges have holes in different locations.

Remove cartridge, spring, floating seat, poppet, and spring. Carefully inspect "O" rings for nicks, extrusion, etc. Inspect seat and poppet for wear, chips, cracks, etc.

Replace "O" ring on poppet if defective, then install well lubricated poppet in relief valve cartridge. Install floating seat with smoothly machined end toward poppet. Next install large spring, adjusting screw, and locknut; then install small spring.

Thoroughly lubricate assembly and install in valve, being careful not to damage "O" ring(s). Securely tighten assembly.

Before operating Backhoe, pressure setting must be adjusted, see "Checking Secondary Relief Valves". Secondary relief valves can be serviced with valve on or off of the Backhoe.

ASSEMBLING VALVE SECTIONS



Figure 48 - Removing Nicks from Valve Section

REFERRING TO FIGURE 48: Using a flat, smooth, fine oil stone in a rotating motion, remove any nicks or burrs. If there are high spots, they can be detected by using the stone. Keep stone flat on valve at all times.

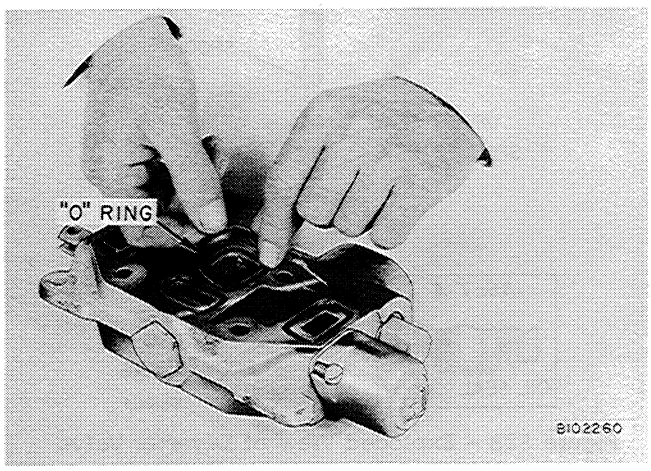

Figure 49 - Installing "O" Ring

REFERRING TO FIGURE 49: Carefully clean "O" ring grooves. If "O" rings were discarded, lubricate new "O" rings and install.

REFERRING TO FIGURE 50: Using a clean flat surface, place L.H. stabilizer section (ports down) on table. Slip tie rods through main relief valve (inlet) section.

Install greased "O" rings in inlet section and slip tie rods through stabilizer section, as the inlet section is moved into place. Check the "O" rings, making sure they are in place. Using the same procedure, assemble other sections in the sequence as shown. Be sure sections are kept together to prevent the "O" rings falling out. If tie rods are tightened with "O" ring partially out of groove, the "O" rings will be damaged, and the valve will leak.

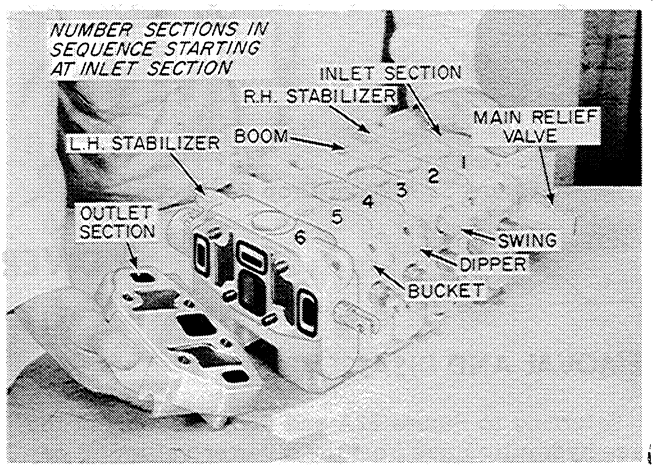

Figure 50 - Reassembling Backhoe Valve Sections

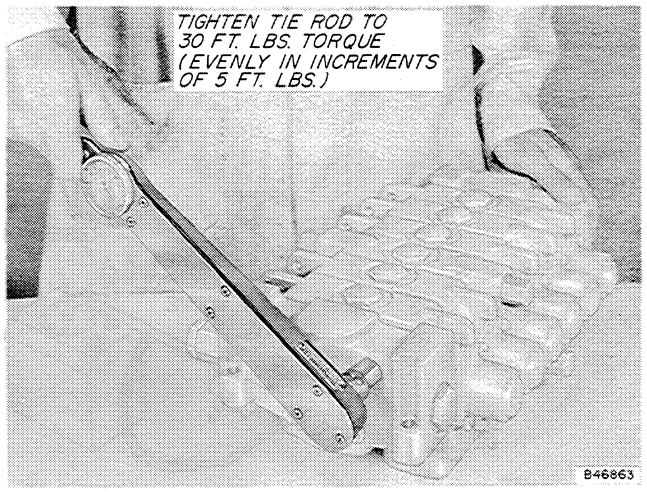

Figure 51 - Tightening Tie Rods

REFERRING TO FIGURE 51: Tighten tie rods to 30 ft. lbs. torque, evenly in increments of 5 ft. lbs. torque. The torque is very important. If too high, there may be spool bind; if too low, the valve may leak or cause the "O" rings to extrude.

BOOM DROP RESTRICTOR

REFERRING TO FIGURE 52: The boom drop speed is controlled by a restrictor installed in the bottom part of the boom spool. It is held in place by means of the hose fitting. Install restrictor with large diameter toward valve spool, then install hose.

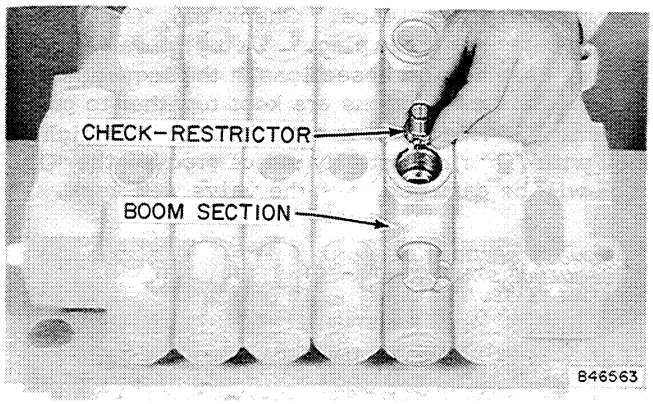

Figure 52 - Boom Drop Restrictor

REINSTALLING VALVE ON BACKHOE

Reinstall the valve and all hoses. Make sure hoses are correctly installed.

Also, be sure shims are placed between valve and mounting plate to eliminate any possibility of housing being distorted after mounting bolts are tightened.

5. DIVERTER VALVE

REMOVAL AND DISASSEMBLY

Referring to Figure 52A and 52B, disconnect the three hydraulic lines from the diverter valve and cap them. Disconnect the control linkage at the valve spool and unbolt the valve from the chassis.

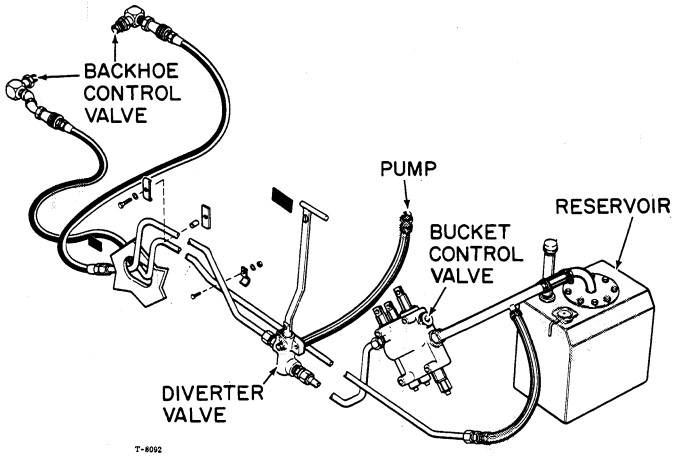

Figure 52A - Typical Loader Hydraulic System

Remove the detent plug, spring and plunger.

Remove the valve spool.

Remove the upper and lower valve spool oil seals.

Remove and discard all the "O" rings.

INSPECTION

Inspect for broken or weak detent spring.

Detent Spring Specifications

Free Length	1-1/8"
Wire Diameter	.047
Outside Diameter	1/4"
Active Coils	12
Total Coils	14
Spring Pressure at compressed height of 1"	.73.4#

There have been two types of detent springs used and if the spring does not meet the specifications given above replace the spring.

Inspect the body and spool for nicks or scoring. Replace complete valve if these parts are damaged.

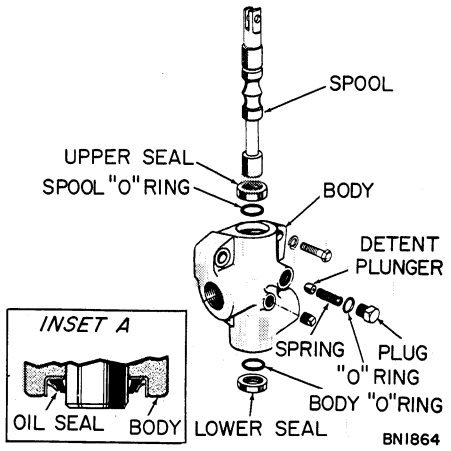

Figure 52B - Exploded View of Diverter Valve

ASSEMBLY

Referring to Figure 52B, install new housing "O" ring and valve spool "O" ring. Install new upper and lower oil seals with the lips pointing outward away from the center of the valve (see inset A). Lubricate valve spool with type A Automatic Transmission Fluid and install from the top of the body being careful not to damage the oil seals.

Install detent plunger, spring, and plug with new "O" ring. Install valve to chassis and connect hydraulic lines.

6. CHECKING AND ADJUSTING BACKHOE MAIN RELIEF VALVE

INSTALLING PRESSURE GAUGE

When the diverter valve has a pipe plug located below the detent plug as shown in Figure 52A, remove this plug and install a 3000 P.S.I. pressure gauge in its place.

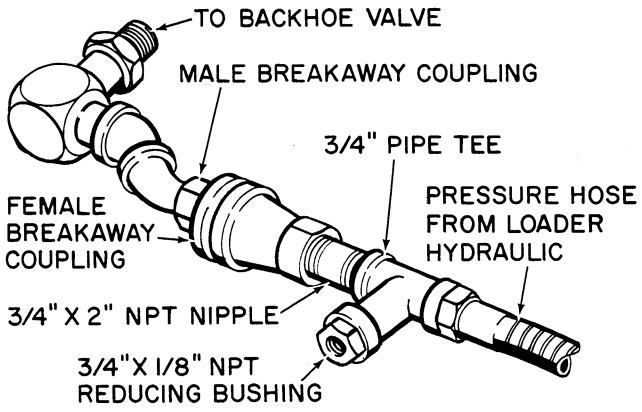

Figure 53 - Pressure Test Tee Installed

When the diverter valve does not have a pipe plug located below the detent plug, a tee must be installed between the female quick disconnect coupling and the pressure hose in the tower as shown in Figure 53.

With the gauge installed as indicated above, the following pressure settings can be checked:

1. Backhoe Main Relief Valve;
2. Backhoe Boom Down Pressure;
3. Swing Criss-Cross Relief Valves.

CHECKING BACKHOE MAIN RELIEF VALVE PRESSURE

To check the backhoe main relief valve, run the engine at the R.P.M. listed in the chart below. With the engine running at this speed, under hydraulic load, the pump will be delivering approximately 20 G.P.M.

Model	Engine Speed
W-7	1500 R.P.M.
W-9A	1100 R.P.M.
W-9 Series B	1350 R.P.M.
W-10	900 R.P.M.

Run the Loader engine until the hydraulic oil is up to operating temperature (approximately 120° F.).

Raise a stabilizer leg until the main relief valve by-passes. Hold back on the lever until a steady gauge reading is obtained. This should be 1750 to 1850 P.S.I.

ADJUSTING BACKHOE MAIN RELIEF VALVE PRESSURE

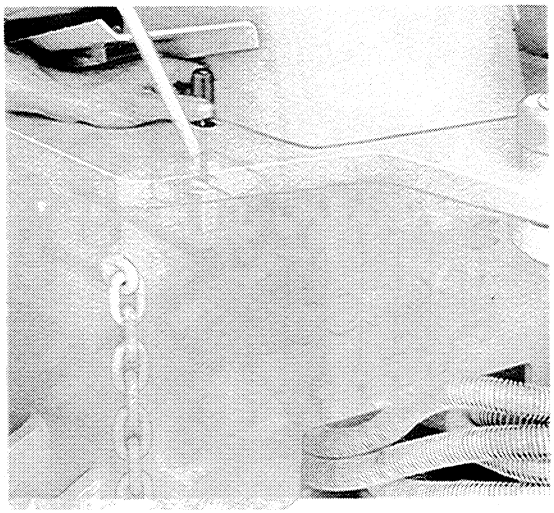

Figure 54 - Adjusting Main Relief Valve Pressure

If the reading is not correct, adjust the backhoe main relief valve as follows (see Figure 54):

1. Loosen the locknut, and turn the adjusting screw as follows:

   TO INCREASE PRESSURE — turn screw clockwise (in);

   TO DECREASE PRESSURE — turn screw counter-clockwise (out).

2. When the correct pressure setting has been obtained, secure the setting with the locknut (without moving the adjusting screw).

A Clean, Well Equipped Service Shop Builds Customer Confidence and Volume Sales.

7. BACKHOE SECONDARY (LOAD) RELIEF VALVES

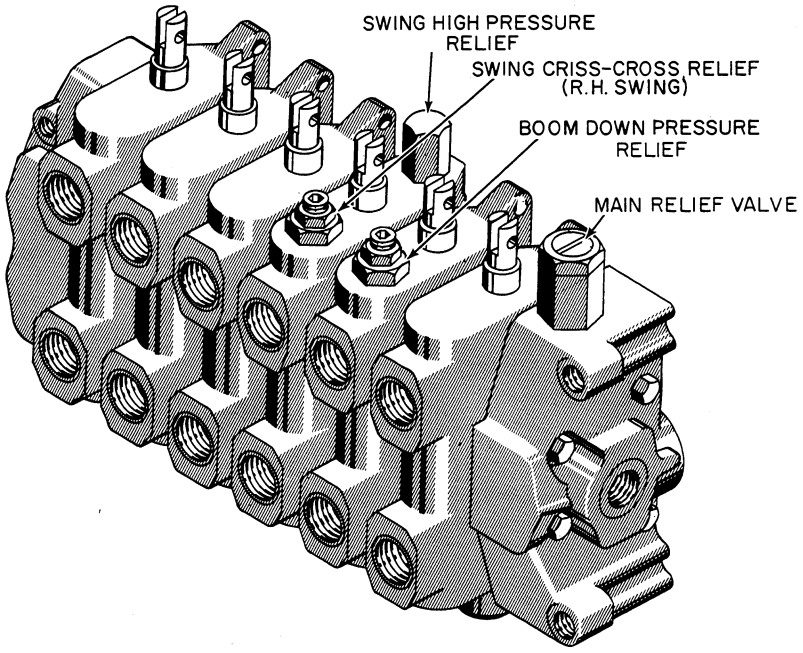

Figure 55 - Location of Secondary Relief Valves

FUNCTION OF SECONDARY RELIEF VALVES

In addition to the main relief valve (or system pressure), secondary (load) relief valves are located in some hydraulic circuits.

HIGH PRESSURE SECONDARY RELIEF VALVES FOR DIGGING CYLINDERS

All "digging" cylinders — boom, bucket, and crowd, have secondary relief valves. While digging, as one control lever is actuated, mechanical pressure may be applied against one or both to the other cylinders, thus forcing the piston against a solid column of oil, "mechanical" hydraulic pressure is produced. When the pressure reaches the specified setting, the secondary relief valve opens, allowing oil to return to the reservoir. Thus, because oil is returned to reservoir, the cylinder is not damaged.

LOW PRESSURE SECONDARY RELIEF VALVE FOR BOOM DOWN PRESSURE

A secondary relief valve is placed in the boom down hydraulic circuit. This relief valve has a dual-purpose: (1) While the boom is being lowered under hydraulic pressure, the relief valve will open when the specified pressure is reached, thus protecting Backhoe from damage; (2) As the dipper arm and bucket are being retracted while digging, under certain operating conditions, pressure will be placed on the boom, tending to force it upward. Thus the same relief valve will open, automatically allowing the boom to raise.

LOW PRESSURE SWING CRISS-CROSS RELIEF VALVES (2)

As the boom is swung from side to side and the control pedal is returned to neutral, this relief valve will open, allowing oil to transfer to opposite swing circuit, thus avoiding abrupt stopping of boom. Also, when the boom is swung and against stops with the control pedal held down or when excessive force is applied against the direction of swing, these relief valves will by-pass, diverting oil back to reservoir.

To check the other criss-cross relief valve, swing the boom to the opposite side, and repeat the procedure.

HIGH PRESSURE SWING RELIEF VALVES (2)

Under certain conditions, the geometry of the swing cylinders is such, that as the boom is swung from side-to-side, and the pedal is returned to neutral position, more oil is displaced by one cylinder. Thus the excess oil is returned to reservoir.

CHECKING SECONDARY RELIEF VALVE WITH SYSTEM PRESSURE

Install pressure gauge in Loader control valve as indicated in Section 6, "Installing Gauge".

BACKHOE BOOM DOWN PRESSURE

1. Lower stabilizers to normal digging position.
2. Fully extend bucket, extend dipper arm, and lower boom until bucket touches ground directly behind at maximum reach.
3. Apply boom down pressure until a steady gauge reading is obtained. This MUST be at 800 engine R.P.M.

Pressure should read 1200 to 1400 P.S.I.

If gauge does not indicate as mentioned above, the secondary relief valve cartridge must be adjusted (see Figure 62).

SWING CRISS-CROSS RELIEF VALVES

1. With the engine running at 750 R.P.M. under hydraulic load, swing the boom all the way to the side.
2. Hold the foot pedal down until a steady gauge reading is obtained.

Pressure should read 1200 to 1400 P.S.I.

If the gauge does not indicate the pressure given above, the secondary relief valve must be adjusted.



CHECKING SECONDARY RELIEF VALVE WITH HAND PUMP

The J. I. Case Company, through Central Service Division's Special Tool Program, has made available a hand pump for checking secondary relief valves. This handy pump is a must for all Service Departments.

This Commercial Shearing P301 Pump, has a 9/16 inch diameter piston rod and a capacity of .25 cu. inch per stroke. For year round use, fill the 1 U.S. gallon capacity reservoir with Case Hi-Lo TCH Oil.

PART NUMBERS

The hand pump, less gauge, fittings, and hose carries Case Part No. P301.

In addition, the following items are required for use with the pump:

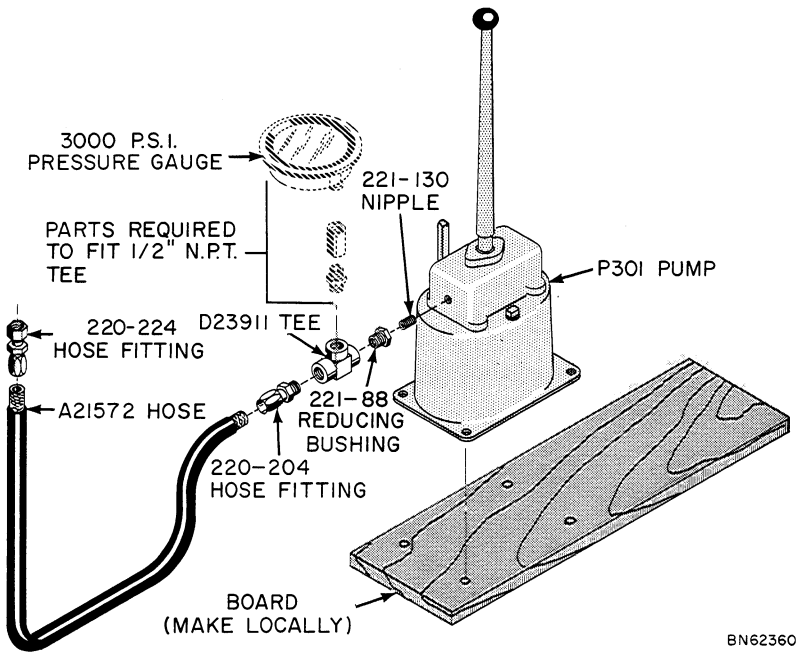

Figure 56 - Hand Pump and Fittings

Hose With Fittings

The hose and fittings are available through Reuseable Fittings and Flexible Hose Lines Program (See Parts Catalog A1044):

Part Number	Description
220-204	5/8" JIC Swivel Fitting for Hose (female)
220-224	1/2" NPT Fitting for Hose (male)
A21572	Hose - 1/2" (Cut to required length)

Parts to Join Hose and Gauge to Hand Pump

Part Number	Description
221-130	1/4" NPT Steel Pipe Nipple (Tee to Pump)
D23911	1/2" NPT Steel Tee (For Pressure Gauge)
*221-88	1/2" NPT to 1/4" NPT Steel Reducing Pipe Bushing (Tee to Nipple)
*218-776	5/8" JIC Plug (For Swing Cylinder Hose)
218-5158	3/4" JIC Plug ("O" Ring type) for ports in Backhoe Control Valve (Bench Test)

Adapters for Joining Hose to Valves, Cylinders, Hoses, Etc.

Part No.	Description	Size on Hose End	Size for Inserting into Component to be Tested
*218-1026	Adapter	5/8" JIC	3/8" NPT
218-445	Adapter	5/8" JIC	1/2" NPT
218-457	Adapter	5/8" JIC	3/4" NPT
*218-736	Adapter	5/8" JIC	5/8" JIC (flared)
218-5062	Adapter	5/8" JIC	5/8" JIC ("O" ring type)
*218-5063	Adapter	5/8" JIC	5/8" JIC ("O" ring type)
D26337	Tee	5/8" JIC	5/8" JIC
**T89A **T86A	Tee	3/4" NPT	3/4" JIC
**T60 **T60A	Cap	3/4" JIC	

*Available from Central Service Division's Special Tool Program, Kit No. 1609-1.
**Available in Flowmeter Kit.

SECONDARY RELIEF VALVE PRESSURES

Shown below are the specifications for relief valves.

Relief Valve	Hand Pump Specifications	*System Pressure Test Specifications
Boom and Bucket (2)	2000 to 2500 P.S.I.	
Crowd (1)	2000 to 2500 P.S.I.	
Boom Down Pressure (1)	1200 to 1400 P.S.I.	1200 to 1400 P.S.I.
Swing Criss-Cross (2)	1200 to 1400 P.S.I.	1200 to 1400 P.S.I.
Swing High Pressure (2)	2000 to 2500 P.S.I.	

*SAE 10 oil at 110° F.

CHECKING CROWD, BOOM (2), AND BUCKET SECONDARY RELIEF VALVES

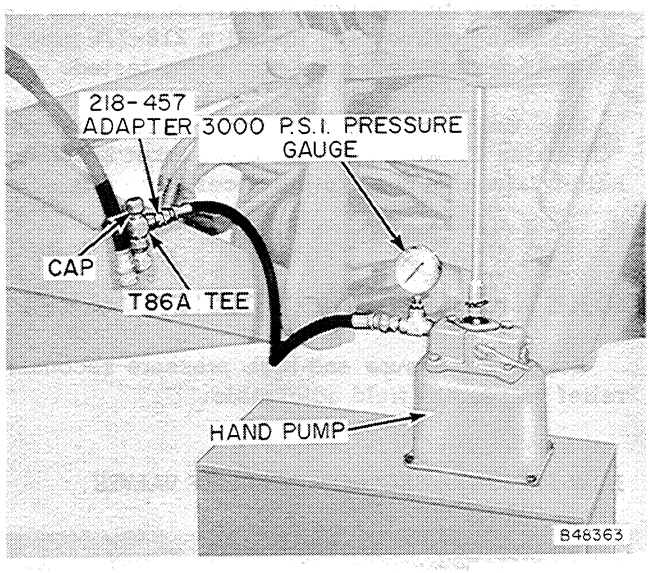

Figure 57 - Testing Crowd Cylinder Relief Valve

Refer to Figure 55 for the location of the relief valve to be tested. Tests are made in the control valve port adjacent to the relief valve.

To check secondary relief valves, proceed as follows:

1. Install an accurate pressure gauge that will read up to 3000 P.S.I. in the hand pump as shown in Figure 56.

2. Install a 218-457 adapter, T86A tee, and T60 cap in the hose line.

3. After hydraulic system has warmed up to operating temperature, remove the applicable hose, see Figures 57, 58, and 59.

4. Make sure the hoses (from port being tested and hand pump) are full of oil, then join hand pump hose to backhoe hose.

5. Actuate lever on hand pump, building up pressure to the required level. Make several checks as air in lines, etc., may give false initial readings.



Figure 58 - Hose Connection for Hand Pump

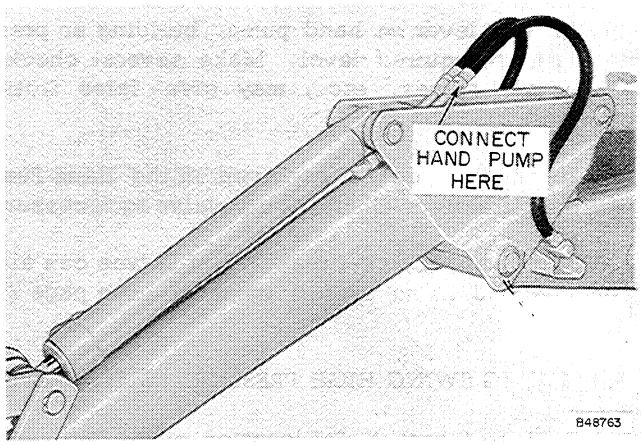

Figure 59 - Hose Connection for Hand Pump

6. If readings are not as given in the Hand Pump Specifications Chart, adjust valve as necessary.

CHECKING SWING CRISS-CROSS RELIEF VALVES

Refer to Figure 55 for location of the two relief valves.

To check criss-cross relief valves, proceed as follows:

1. Install an accurate pressure gauge that will register up to 3000 F.S.I. in the pump.

2. Install 218-736 adapter in hand pump hose line.

3. After the system has warmed up to operation temperature, disconnect the applicable hose at the rear of the swing cylinder. Keep in mind that you must remove the hose from port in the opposite side of valve on which the relief valve is located.

4. Join the hand pump hose to the backhoe hose.

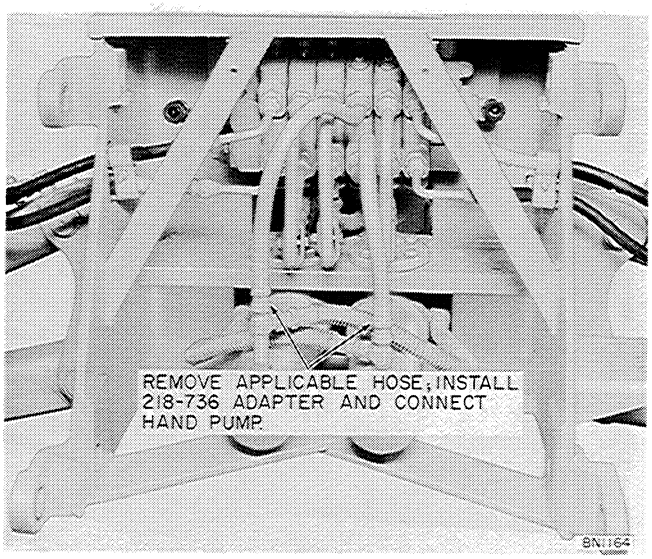

Figure 60 - Checking Swing Criss-Cross Relief Valves

5. Actuate lever on hand pump, building up pressure to required level. Make several checks, as air in lines, etc., may give false initial readings.

6. If readings are not as given in the Hand Pump Specifications Chart, adjust valve as necessary.

NOTE: Swing Criss-Cross Relief Valves can also be checked using system pressure, see page 21.

CHECKING SWING HIGH PRESSURE RELIEF VALVES

Refer to Figure 55 for location of the two swing high pressure relief valves.

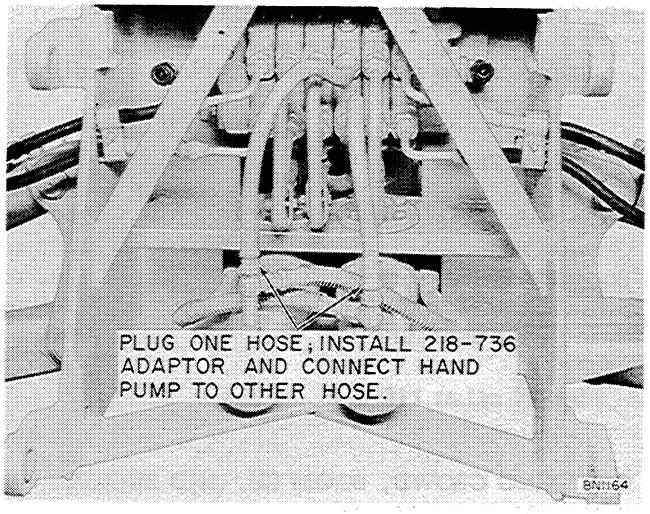

Figure 61 - Checking Swing High Pressure Relief Valves

When making this test, it will be necessary to disconnect both swing cylinder hoses from the rear of the swing cylinders. Install a 218-776 plug in the hose from the opposite port being tested.

Use the checking procedure indicated under "Checking Crowd, Boom (2), and Bucket Secondary Relief Valves" and make the necessary tests.

ADJUSTING SECONDARY RELIEF VALVES

Both low pressure and high pressure secondary relief valves are field adjustable.

LOW PRESSURE SECONDARY RELIEF VALVES

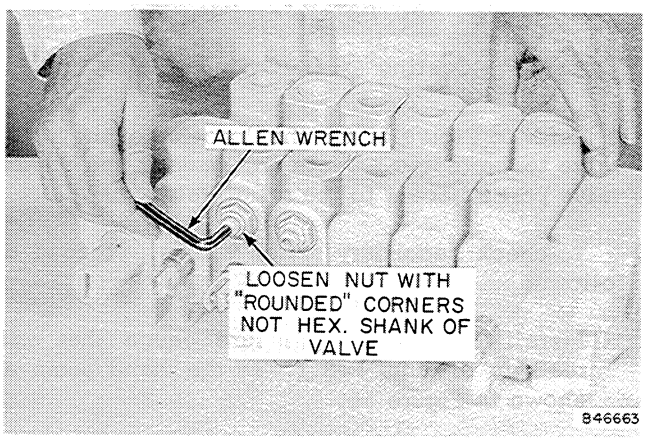

Figure 62 - Adjusting Low Pressure Relief Valves

To adjust low pressure secondary relief valves, proceed as follows:

1. Loosen jam nut.

2. Turn adjusting screw clockwise to increase pressure; counterclockwise to decrease pressure.

3. Again check pressure with hand pump, then secure pressure setting with jam nut (without disturbing setting).

HIGH PRESSURE SECONDARY RELIEF VALVES

To adjust high pressure secondary relief valves, proceed as follows:

1. Remove cap and shims (if used).

2. To increase pressure add shims; to decrease pressure delete shims.

3. Again check pressure after cap and shims (if required) have been reinstalled on valve. Tighten cap to 30 ft. lbs. maximum torque. Apply pressure to base of cap in much the same manner as tightening spark plugs.

8. BOOM DROP CONTROL (FLOW RESTRICTOR)

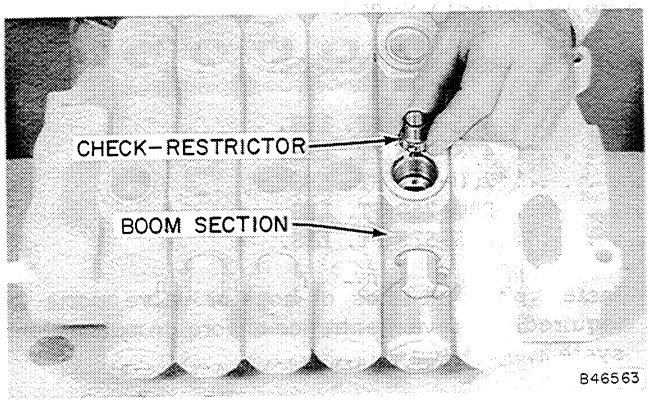

REFERRING TO FIGURE 63: The flow control restrictor is held in place by means of the hose. Install restrictor as shown with large diameter toward spool.

This check restrictor valve limits the drop speed of the boom, but does not limit hydraulic pressure.

Figure 63 - Location of Boom Drop Flow Restrictor

9. HYDRAULIC CYLINDERS

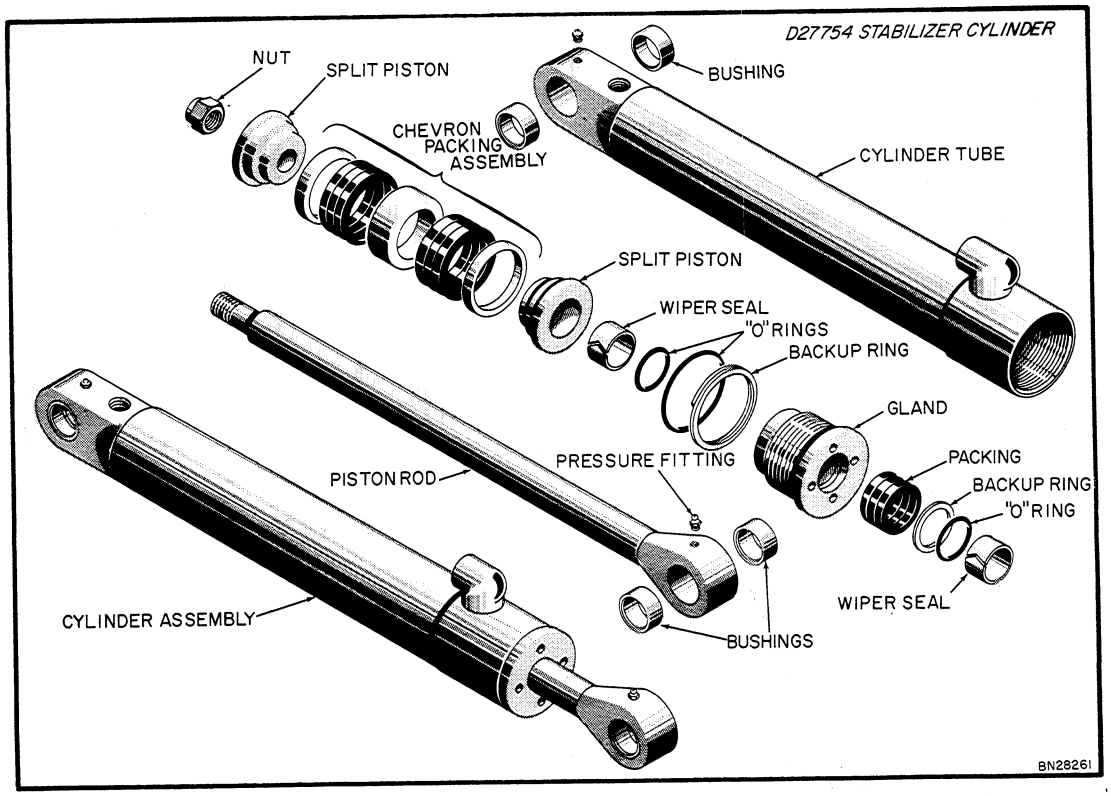

Figure 64 - Exploded View of Typical Cylinder

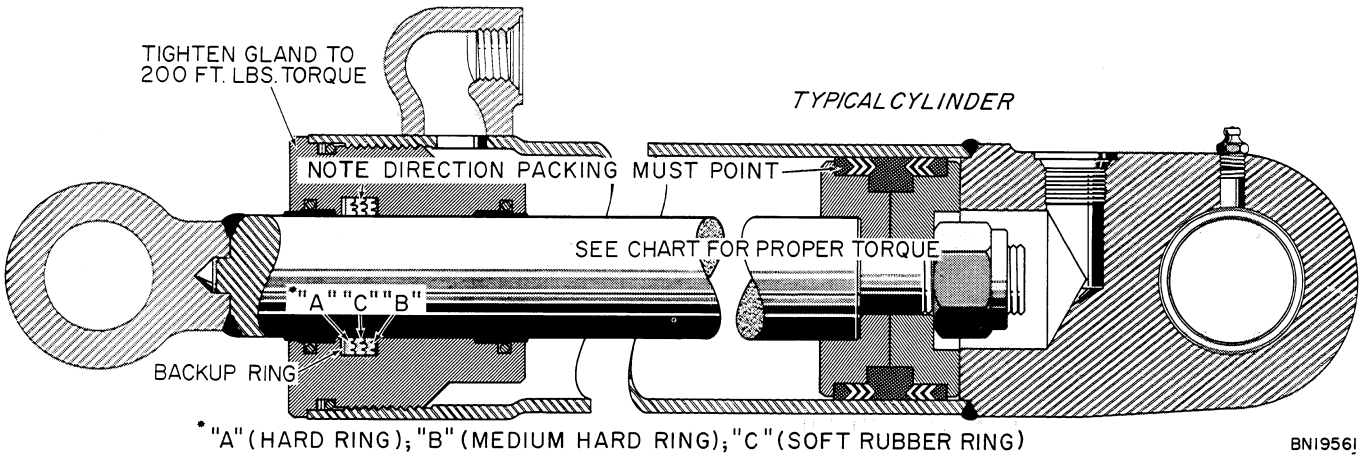

Figure 65 - Cross Sectional View of Typical Cylinder

CYLINDER	PISTON ROD NUT TORQUE
STABILIZER	475-525 FT. LBS.
SWING	475-525 FT. LBS.
BOOM	700-750 FT. LBS.
CROWD	700-750 FT. LBS.
BUCKET	475-525 FT. LBS.

SERVICING TYPICAL CYLINDER
(LOADER OR BACKHOE)

This section provides the information necessary to disassemble and reassemble a typical cylinder. The cylinder components are of the same design, however, the size varies.

The "Cross-Sectional Views" show the positions of internal components and torque specifications for tightening the piston rod nut or cap screw and gland.

When servicing cylinder, refer to illustration applicable to cylinder being serviced.

Always replace all seals, packing, etc., when rebuilding a cylinder.

REMOVING CYLINDERS

To ensure safe and expeditious removal of cylinders, follow these procedures:

With engine shut off, put applicable control lever through several operational cycles to equalize pressure within the system.

Clean the exterior of the cylinder to be removed thoroughly with solvent, then disconnect the hoses. Install plugs in ends of hose or valve ports (as required) to prevent entrance of foreign material into system.

STABILIZER CYLINDER

With stabilizer resting on ground, remove snap rings and pull the pins.

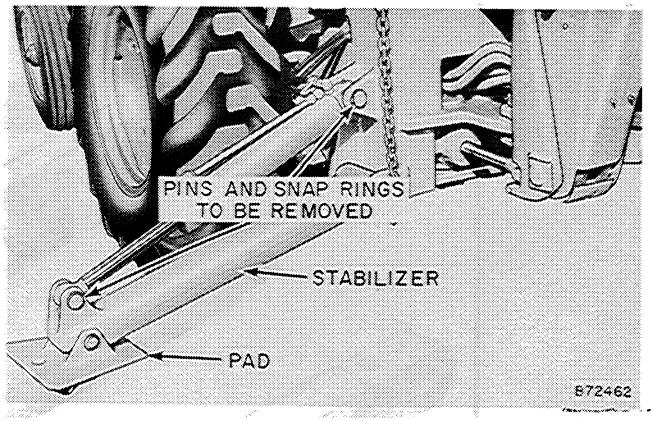

Figure 66 - Stabilizer Cylinder

BOOM CYLINDER

Extend bucket and dipper arm and lower boom to ground level. Remove snap rings, washer(s), and pull the pins.

CROWD CYLINDER

Extend bucket and dipper arm and lower boom to ground level. Remove snap rings and pull the pins.

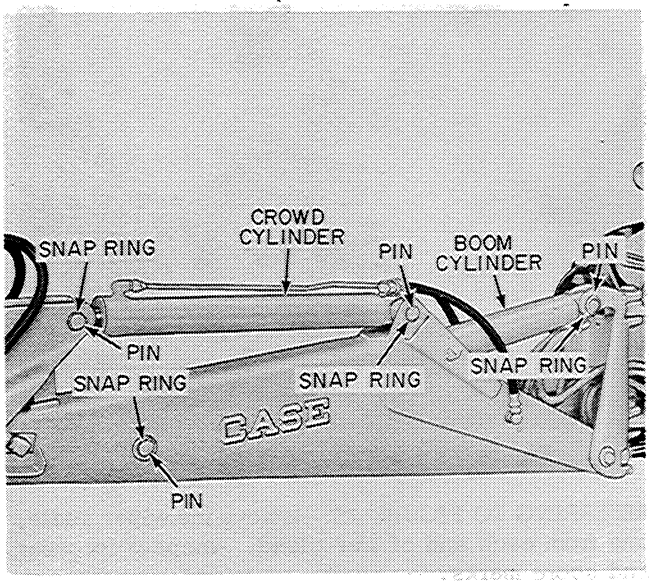

Figure 67 - Crowd Cylinder

BUCKET CYLINDER

Raise boom and dipper arm slightly. Then place 6 inch block under end of dipper arm and rest weight of boom and dipper arm on block.

Remove snap rings, washer, and pull the pins.

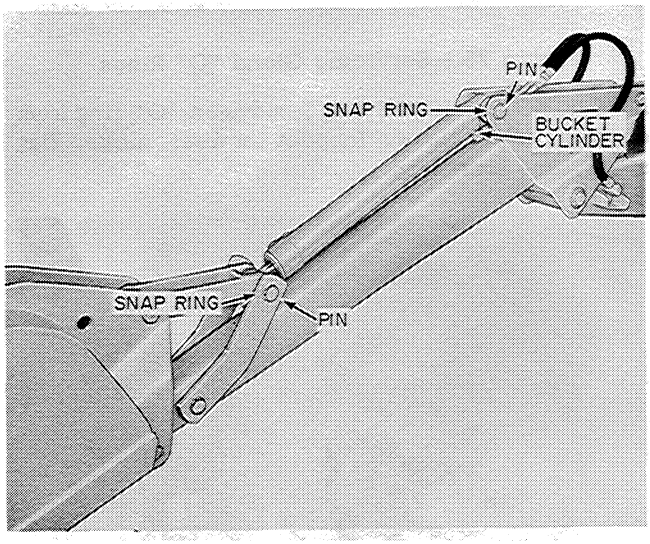

Figure 68 - Bucket Cylinder

SWING CYLINDER

Extend the bucket and dipper arm and lower the boom to ground level. Remove the cap screw from the swing tower, see Figure 69.

Drive the pin down from inside the swing tower and out the bottom. Remove the eight cap screws from the pins which mount the cylinder to the backhoe mounting frame. Pull the two pins and disconnect the hoses.

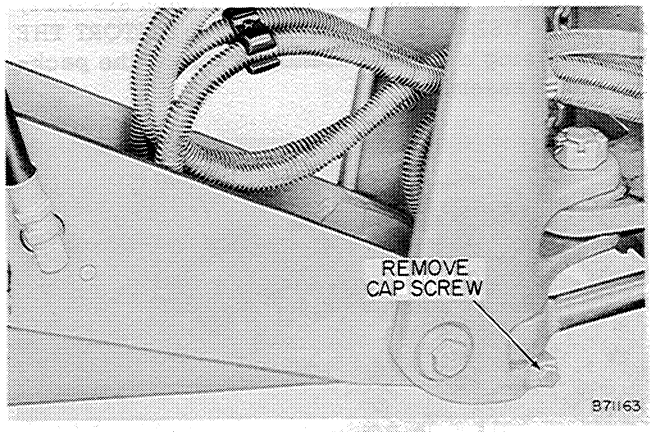

Figure 69 - Removing Swing Cylinder

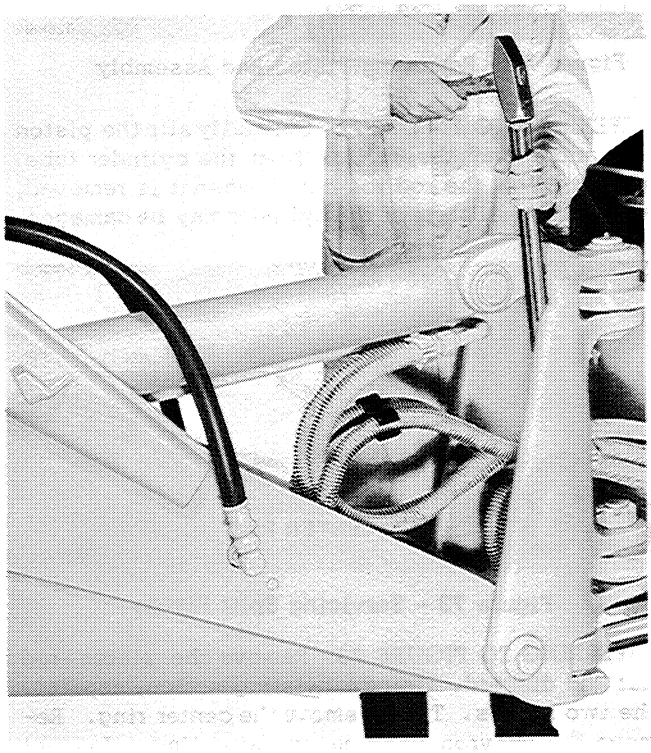

Figure 70 - Removing Swing Cylinder

SERVICING CYLINDERS

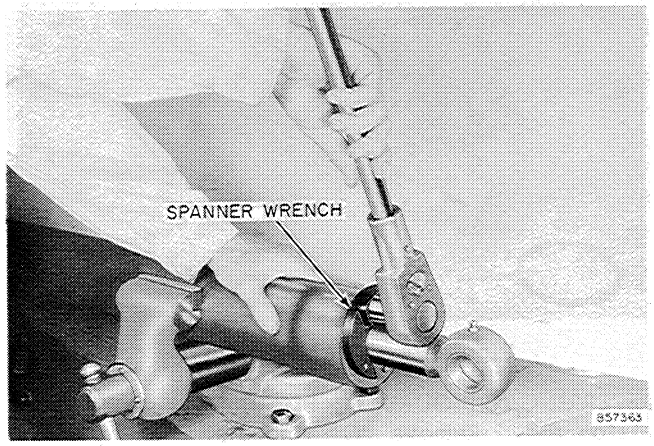

Figure 71 - Cylinder in Vise

REFERRING TO FIGURE 71: Place cylinder assembly in vise — USING CAUTION NOT TO DISTORT THE TUBE. Using a spanner wrench, unscrew the packing gland assembly.

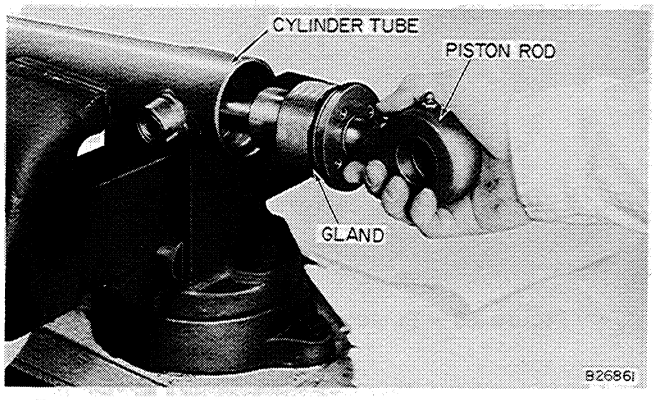

Figure 72 - Removing Piston Rod Assembly

REFERRING TO FIGURE 72: Carefully slip the piston rod and gland assemblies from the cylinder tube. Do not allow the rod to "cock" when it is removed, as the internal parts of the cylinder may be damaged.

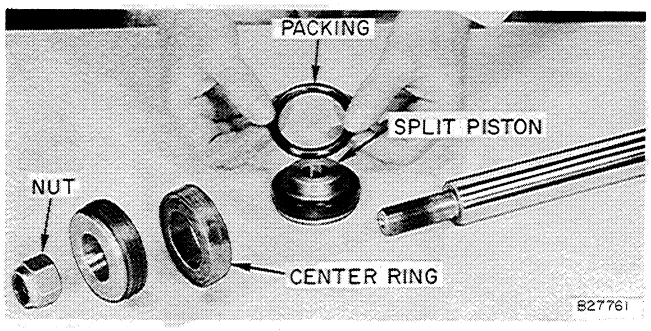

Figure 73 - Servicing Split Piston

REFERRING TO FIGURE 73: Remove the piston rod nut and discard. Using a twisting motion, separate the two halves. Then, remove the center ring. Remove the chevron packing one at a time. Inspect all parts for wear.

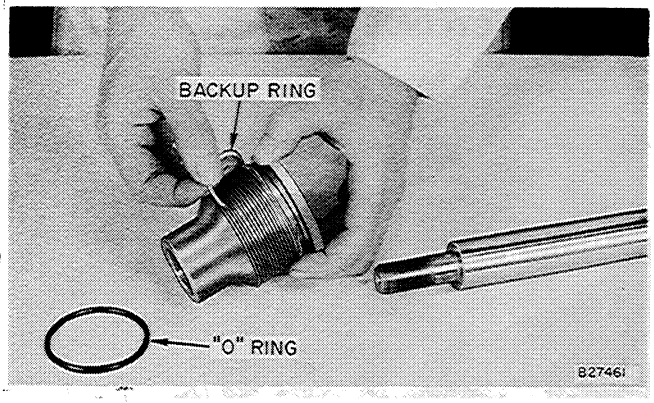

Figure 74 - Gland Assembly

REFERRING TO FIGURE 74: Slip gland assembly from piston rod. Remove "O" ring and back-up ring. Inspect for wear, nicks, and extrusion.

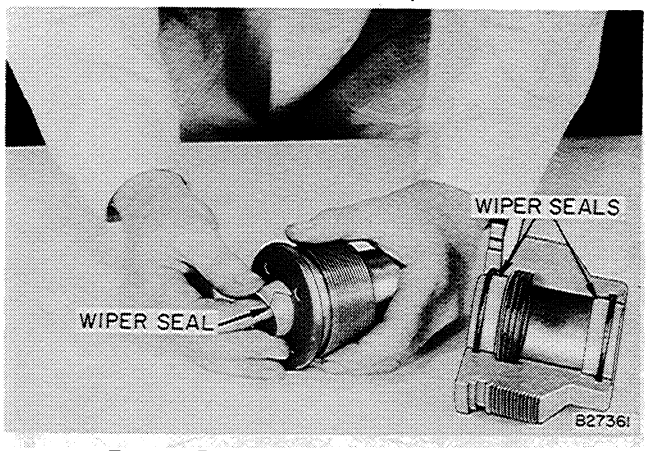

Figure 75 - Servicing Wiper Seals

REFERRING TO FIGURE 75: Remove the wiper seals, one from each end of the gland. Inspect for wear and score marks.

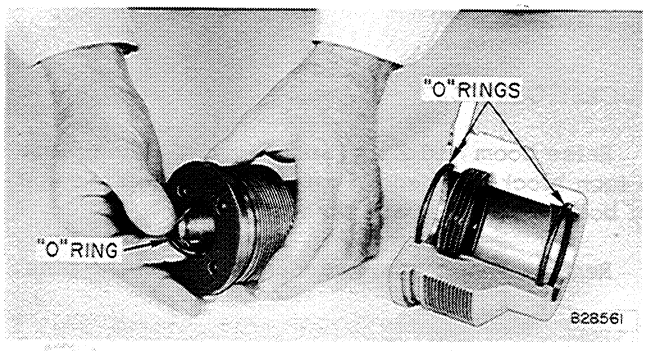

Figure 76 - Servicing Gland "O" Rings

REFERRING TO FIGURE 76: Remove an "O" ring from each end of the gland. Inspect for wear, nicks, flat spots, and extrusion.

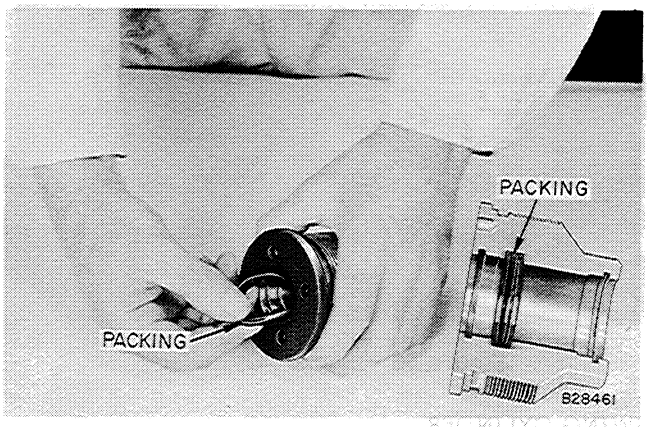

Figure 77 - Removing Packing Rings

REFERRING TO FIGURE 77: Using a screwdriver, remove the back-up ring and three (3) packing rings. The packing rings probably will be damaged when they are removed. Therefore, do not remove them unless new packing is to be installed.

Carefully wash all parts and place on clean paper.

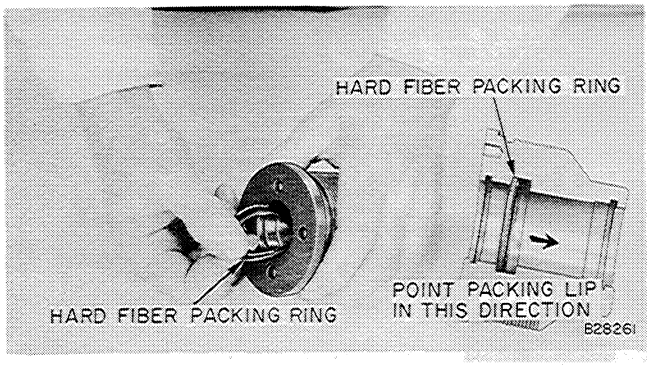

Figure 78 - Installing Hard Fibre Packing Ring

REFERRING TO FIGURE 78: Each packing ring is of a different hardness of material. Dip the hard fibre packing ring in hydraulic oil and install with lips pointing toward the small end of the gland. Keep the hard fibre ring toward the outer end of the gland.

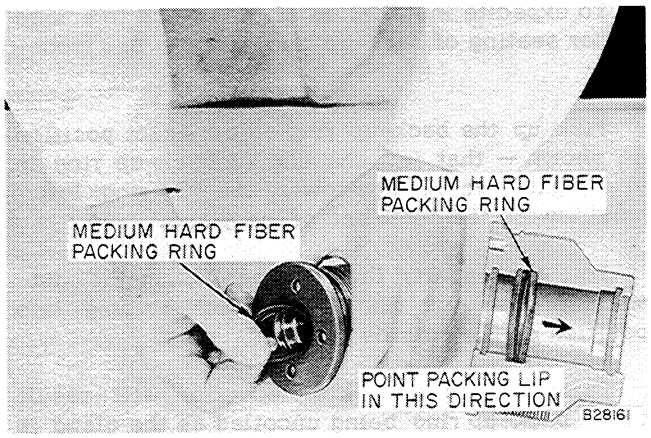

Figure 79 - Installing Medium Hard Fibre Packing Ring

REFERRING TO FIGURE 79: Dip the medium hard, fibre packing ring in hydraulic oil and install in the groove toward the inside end of gland.

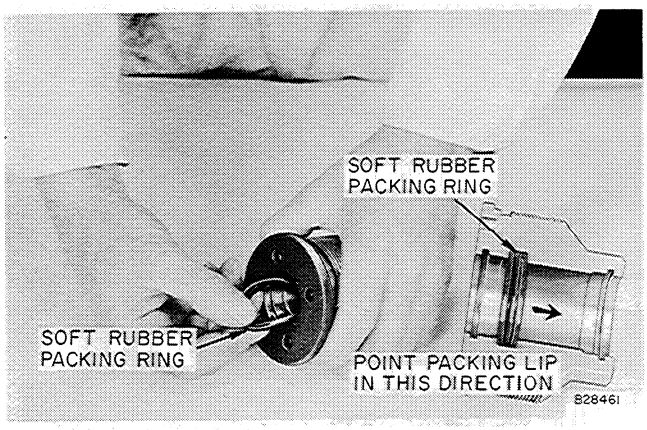

Figure 80 - Installing Soft Rubber Packing Ring

REFERRING TO FIGURE 80: Lubricate the soft rubber packing ring and install between the two fibre rings installed previously.

REFERRING TO FIGURE 81: After the packing rings have been installed, slip the back-up ring(s) (dry — do not lubricate) into position as shown. Work the packing and back-up rings until they are completely seated in the groove.

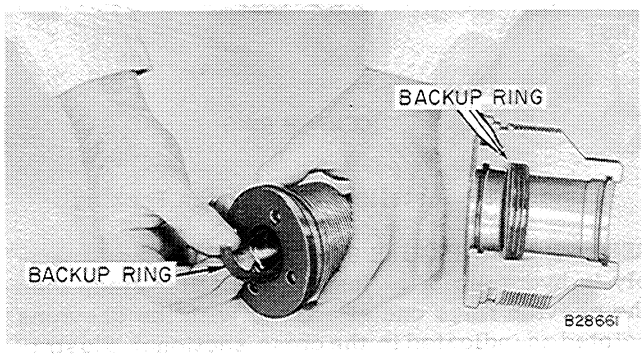

Figure 81 - Installing Packing Back-up Ring

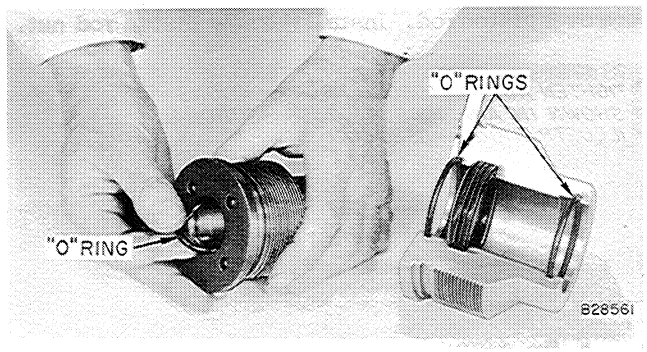

Figure 82 - Installing "O" Rings

REFERRING TO FIGURE 82: Dip "O" rings in hydraulic oil, then install an "O" ring in each end of the gland.

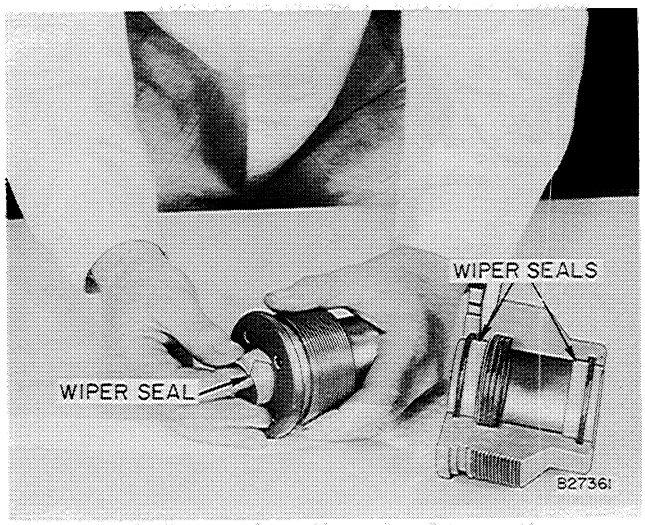

Figure 83 - Installing Wiper Seals

REFERRING TO FIGURE 83: Install wiper seals, one in each end of gland. "Snap" into place and make sure the cut is fully mated.

Install well lubricated gland assembly on well lubricated piston rod.

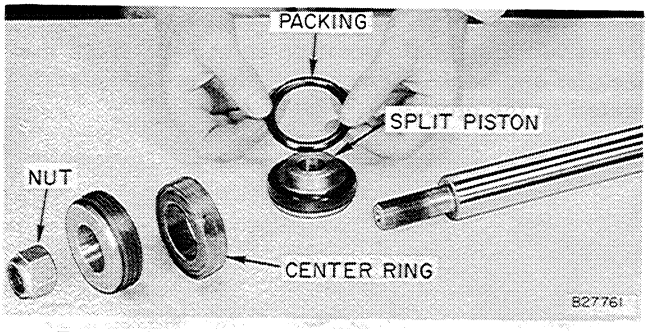

Figure 84 - Installing Split Piston Packing

REFERRING TO FIGURE 84: Dip the packing assembly in hydraulic oil. Install hard fibre ring, then the chevron rings one at a time, with the chevrons pointed as indicated in the cross sectional illustration of the cylinder being serviced. Place the halves together and install on piston rod with deep counterbore over piston rod. Install the new piston rod nut.

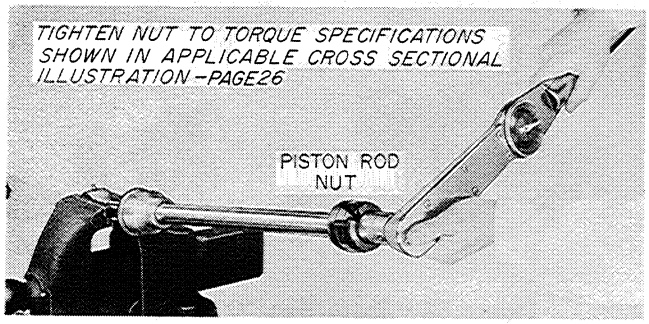

Figure 85 - Tightening Piston Rod Nut

REFERRING TO FIGURE 85: Tighten piston rod nut to torque specifications shown in cross sectional illustration for cylinder being serviced.

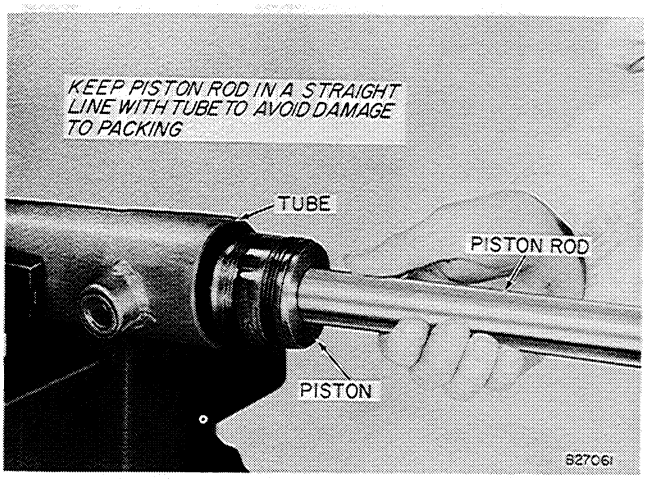

Figure 86 - Installing Piston Rod

REFERRING TO FIGURE 86: Lubricate cylinder tube and packing thoroughly and install as shown. After packing has started in smooth surface of tube, then slide gland into position. Place a rod in the piston rod eye and work piston rod assembly into place. Keep piston rod in a straight line with cylinder tube to prevent damage to packing or cylinder tube.

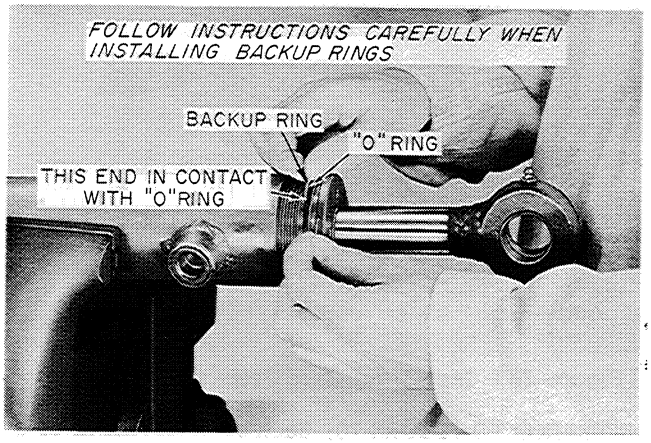

Figure 87 - Installing "O" Ring and Back-up Ring

REFERRING TO FIGURE 87: Install well lubricated "O" ring on gland.

To expedite installation of gland and to ensure proper seating of back-up ring, follow this procedure:

Pick up the back-up ring in the exact position as shown — that is: the end of back-up ring in your right hand must go toward the "O" ring; left hand toward the outer end of the gland.

Pull ends apart, thus increasing inside diameter of back-up ring. Slip back-up ring into position on the outside of the "O" ring.

Failure to observe this precaution will result in the back-up ring being uncoiled as the gland is threaded into the cylinder tube.

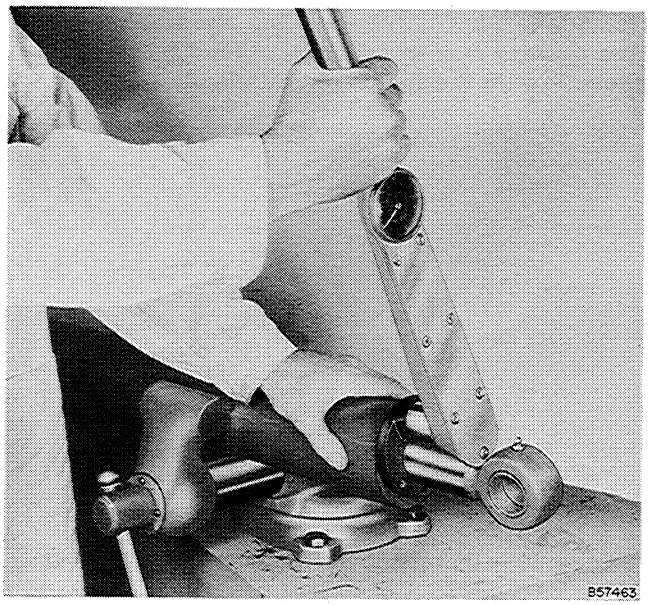

Figure 88 - Tightening Gland with Spanner Wrench

REFERRING TO FIGURE 88: Screw gland into tube and tighten securely. To assure gland is securely tightened, torque to 200 ft. lbs.

ROLL PIN

Some cylinders in the field do not have roll pin (3/16" x 5/8" Part Number 138-90) installed in cylinder gland. Normally, when the gland is tightened to 200 ft. lbs. torque as specified, no difficulty will be experienced.

When servicing cylinder, the pin should be installed after gland is properly tightened to 200 ft. lbs. torque.

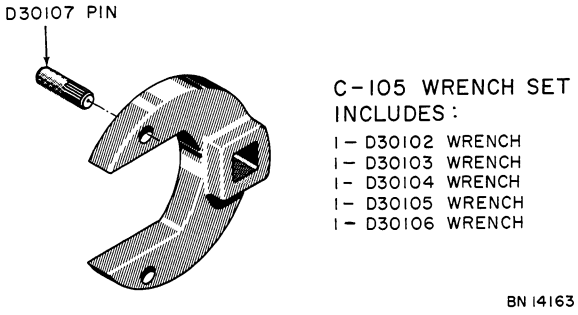

Figure 89 - C-105 Spanner Wrench Set

Use proper size spanner wrench from Spanner Wrench Kit C-105. Order the Spanner Wrench Kit C-105 in the usual manner from J. I. Case Company.

REFERRING TO FIGURE 90: To tighten gland properly, make sure torque wrench is parallel with spanner wrench. When torque wrench shows 200 ft. lbs. the torque actually is slightly higher.

REFERRING TO FIGURE 91: Drill a .187/.192 inch hole — 7/16 inch deep, with half of hole in tube, half in gland. When drilling the hole make sure it is not close to holes for spanner wrench.

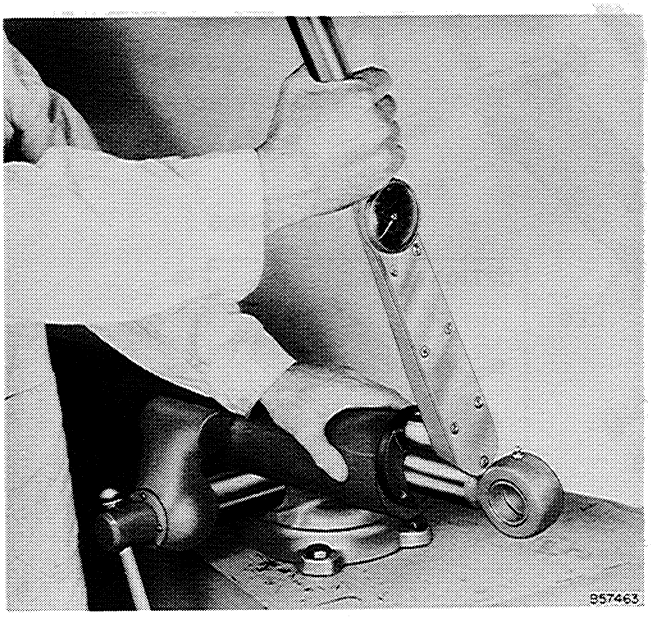

Figure 90 - Tightening Gland with Spanner Wrench

When servicing a cylinder which had roll pin previously, the holes may not line up after being tightened to 200 ft. lbs. torque. If the holes do not line up, drill new holes as instructed above.

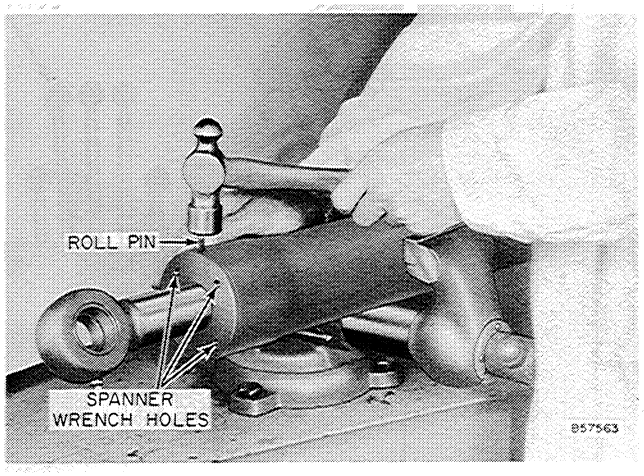

Figure 91 - Installing Roll Pin

INSTALLING BOOM CYLINDER

1. Place a board (1" x 5" x 42") over tubes located on inside of boom.
2. Slip the boom cylinder into place with the hoist.
3. Install pin "B" and reconnect the hoses.
4. Actuate the control lever and extend the piston rod. MAKE SURE THE PISTON ROD YOKE IS SLIDING ON THE BOARD.
5. Using a hoist, lift up on the cylinder until the yoke is even with the opening for pin "A". If necessary, actuate boom control lever to extend or retract piston rod.
6. Install pin "A".
7. Actuate the cylinder in both directions and check for leaks and proper operation of the cylinder.

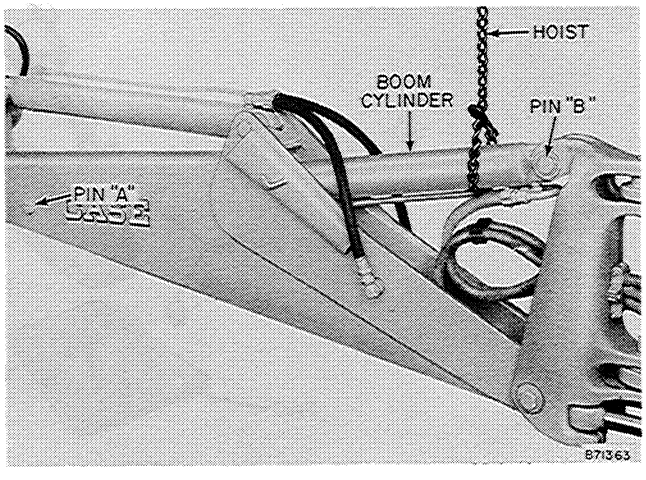

Figure 92 - Installing Boom Cylinder

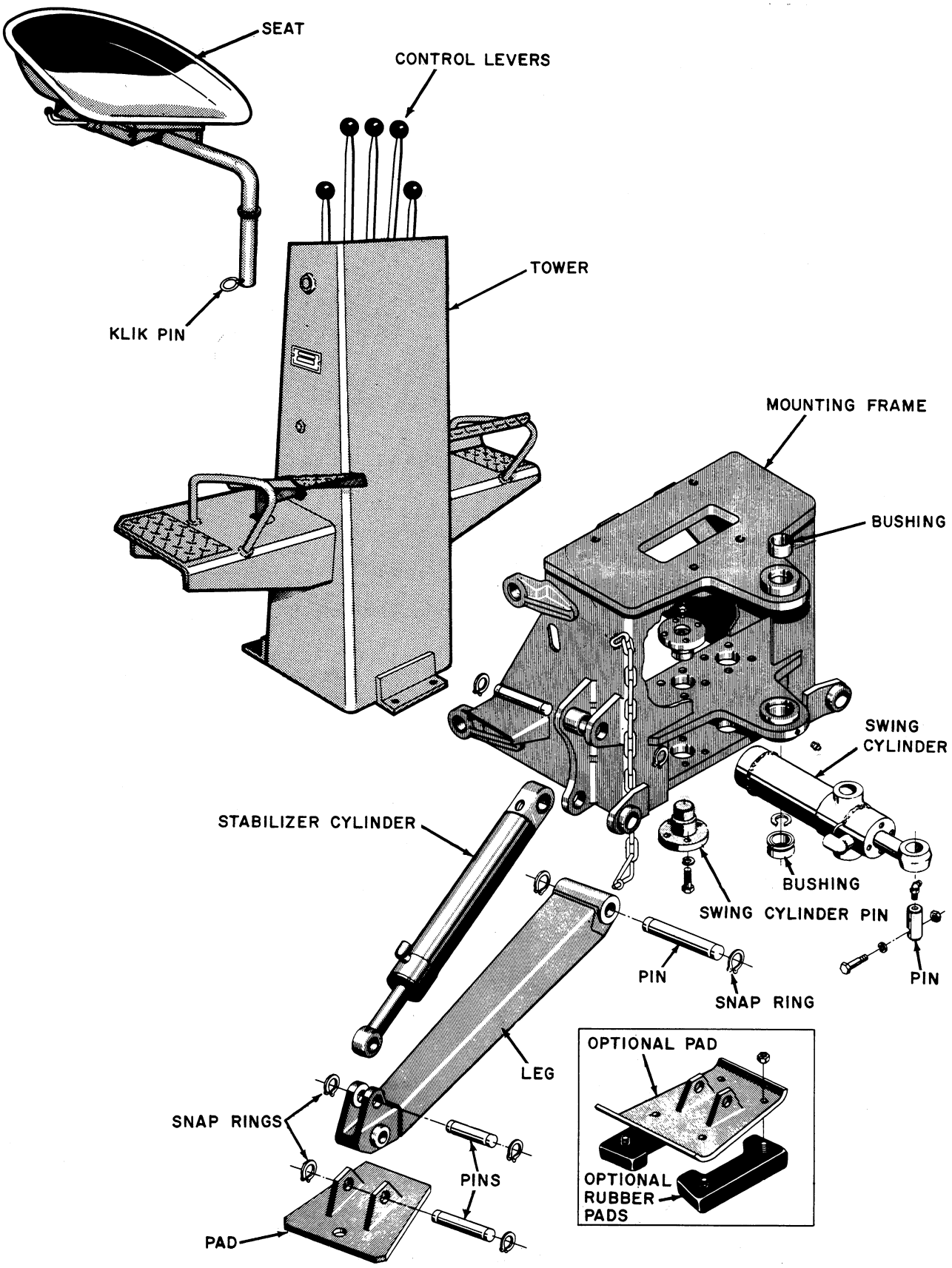

Figure 93 - Backhoe Mounting Parts

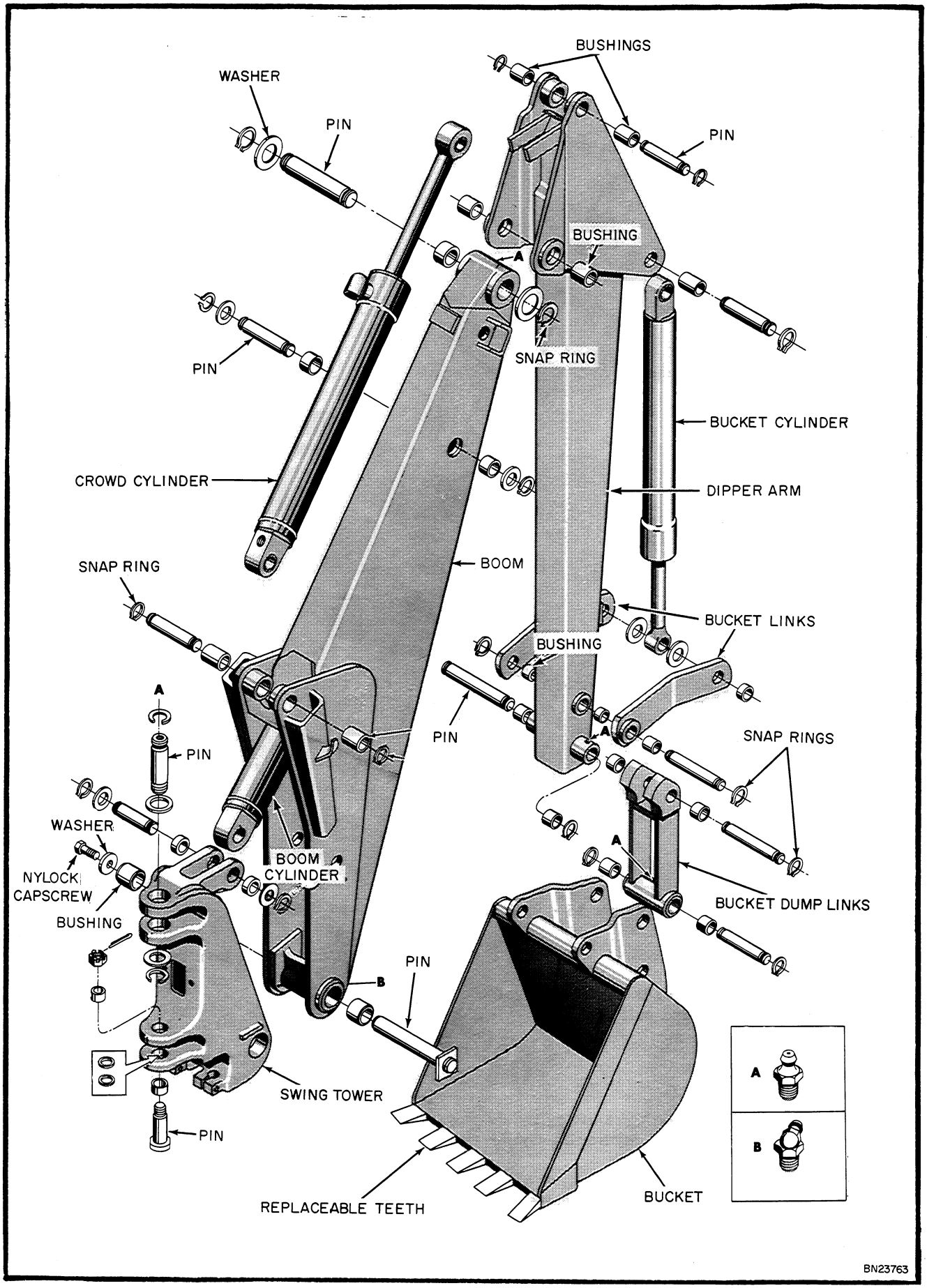

Figure 94 - Tower, Boom, Dipper Arm, and Bucket

REMOVING BACKHOE COMPONENTS

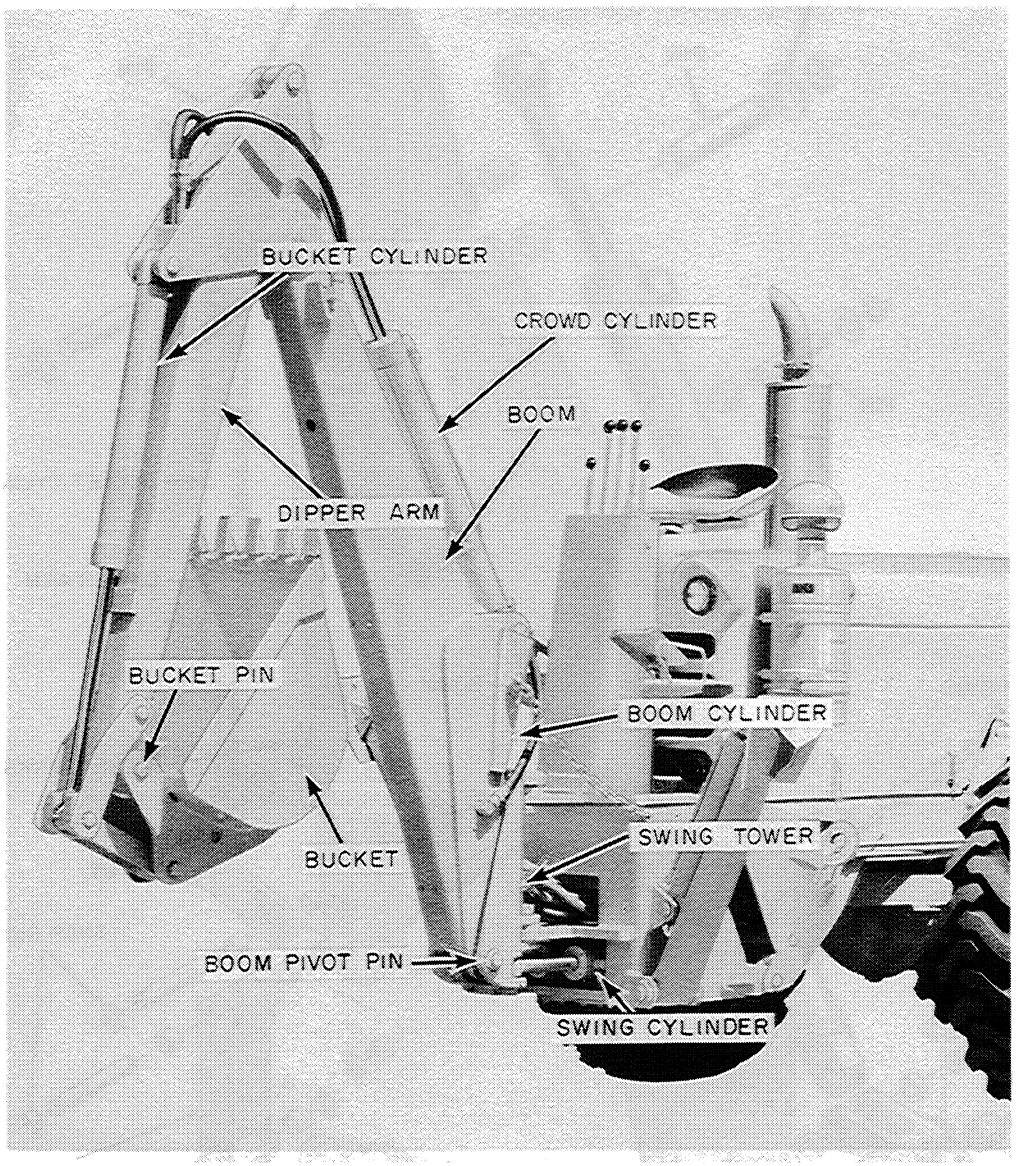

Figure 95 - Bucket, Dipper Arm, and Boom

BUCKET

To remove the bucket, lower it to ground level; then remove the snap rings and pull the pins.

DIPPER ARM

Instructions for removal of the hydraulic cylinders are covered under the head "9. Hydraulic Cylinders".

After hydraulic cylinders have been removed (if necessary) and hydraulic lines disconnected, remove bucket.

Extend dipper arm and lower boom. Attach chain hoist to dipper arm. Remove the dipper arm pivot pin and lift dipper arm from the Backhoe.

BOOM

After hydraulic cylinders have been removed (if necessary) and the hydraulic lines disconnected, remove bucket and dipper arm.

Lower boom to ground level. Attach chain hoist to boom. Remove the boom pivot pin and lift boom from Backhoe.

SPLITTING BACKHOE

Attach a chain hoist to the swing tower and lower the bucket to ground level.

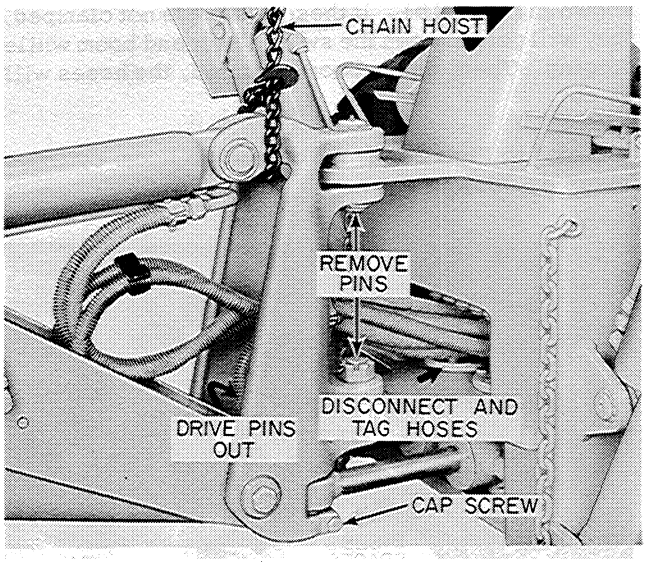

Figure 96 - Splitting Backhoe

Disconnect the swing cylinder rods from the swing cylinder by removing the two cap screws and driving the pins out the bottom.

Disconnect (and tag) the hoses to the backhoe at the tubes from the valve. Remove swing tower pivot pins.

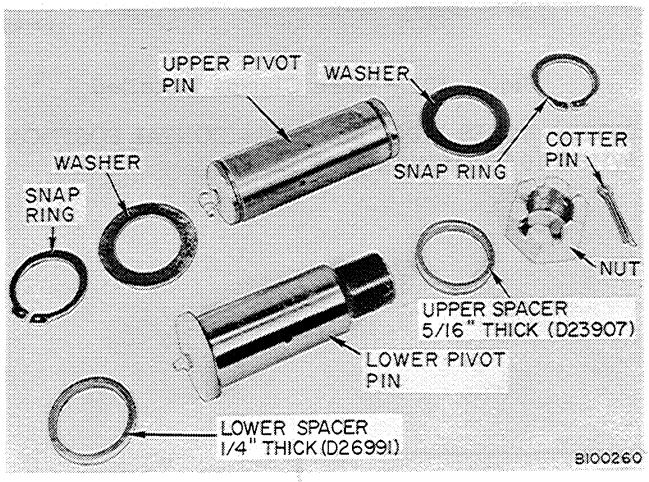

Figure 97 - Swing Tower Pivot Pins

Pull the Backhoe assembly from the mounting frame.

NOTE: If swing tower is to be replaced, place a small block under the end of the boom and lower it onto the block. Remove boom and boom cylinder pivot pins and install replacement swing tower.

SERVICING BUSHINGS

Upper Pivot Bushing

From the top side of the mounting plate, drive the hardened steel bushing out.

LOWER PIVOT BUSHING

The lower pivot bushing is a pivotal ball type (self-aligning) bushing.

Remove the snap ring and drive the pivotal ball type bushing out from the underside of the mounting plate.

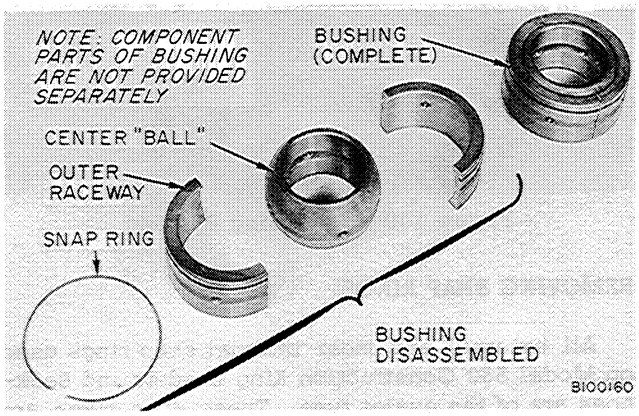

Figure 98 - Pivotal Ball Type Bushing

TYPICAL BUSHINGS

Shown are bushings used in cylinder piston rod yokes. However, this procedure can be used for servicing all hardened, steel bushings.

Using a driver tool as shown (or press), remove the bushing, then install replacement bushing.

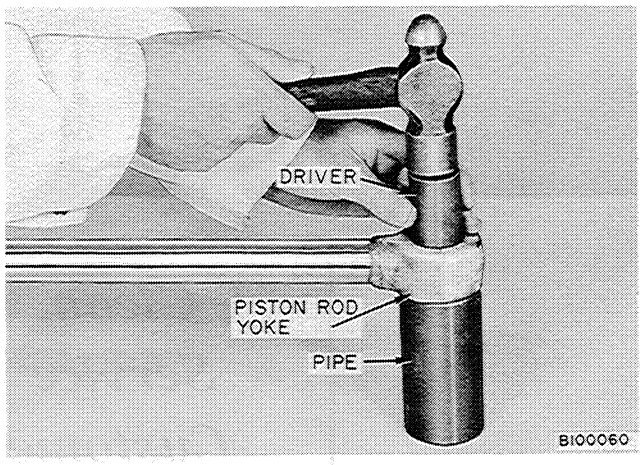

Figure 99 - Removing Bushing

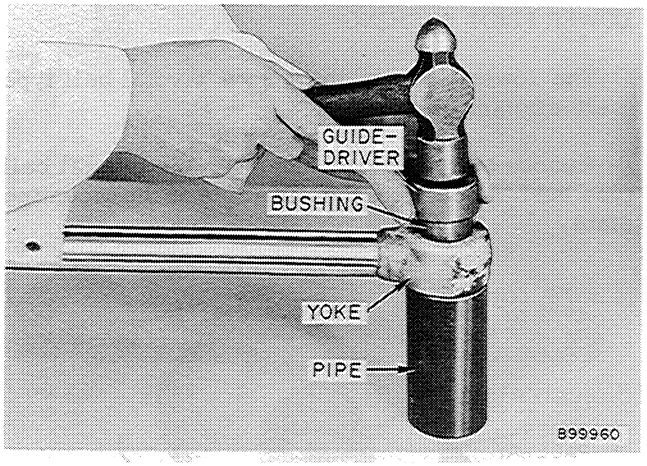

Figure 100 - Installing Bushing

REMOVING SNAP RINGS

All external and most internal snap rings used on Model 530 Construction King Loaders and Backhoes are of the eyelet type. These snap rings are EASILY removed or installed, using pin type pliers. Your Case Branch can supply these pliers (Part Number 6R) through Central Service Division's Special Tool Program.

BUCKET CYLINDER HOSE CLAMPS

The bucket cylinder hoses must be clamped as shown in Figure 101. If these hoses are not clamped, they will get between the swing tower and boom while digging. Then, as the boom is raised, the hoses will be cut.

Refer to Figure 101 and clamp the boom cylinder hoses as shown.

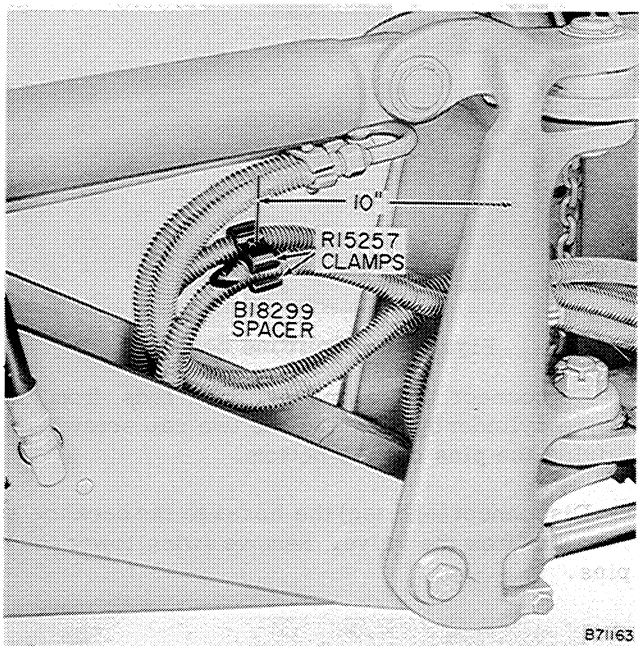

Figure 101 - Hose Clamps Installed

NOTE: HOSES MUST BE IN HORIZONTAL POSITION WHEN 10" DIMENSION IS TAKEN.

A Clean, Well Equipped Service Shop Builds Customer Confidence and Volume Sales.

11. HYDRAULIC SYSTEM TROUBLE SHOOTING CHART

PROBABLE CAUSE	SUGGESTED REMEDY	REFERENCE
PUMP NOISY		
1. Hydraulic oil level too low.	1. Fill to proper level and check for leak.	—
2. Clogged or collapsed suction line to pump.	2. Check suction line for restriction.	—
3. Air leaks in suction line.	3. Check suction line for leaks.	—
4. Pump running too fast.	4. Reduce engine R.P.M.	—
5. Too heavy viscosity oil for prevailing air temperature.	5. Use Case Hi-Lo TCH Oil.	—
6. Oil not warmed up to operating temperature.	6. Allow oil to warm up before operating system.	—
7. Contaminated oil.	7. Drain oil, clean filter, and flush system.	—
8. Pump mounting bolts loose.	8. Tighten bolts.	—
9. Damaged pump due to overheating because of a lack of oil, etc.	9. Service pump.	—
10. Pump bearing or journals worn.	10. Service pump.	—
HYDRAULIC OIL FOAMS (AERATED)		
1. Hydraulic oil level too low.	1. Fill to proper level and check for leaks.	—
2. Clogged or collapsed suction line to pump.	2. Check suction line for restriction.	—
3. Air leaks in suction line.	3. Check suction line for leaks.	—
4. Pump running too fast.	4. Reduce engine R.P.M.	See pages 3D-3, 3D-19
5. Too heavy viscosity oil for prevailing air temperature.	5. Use Case Hi-Lo TCH Oil.	See page 3D-3
6. Oil not warmed up to operating temperature.	6. Allow oil to warm up before operating system.	—
7. Contaminated oil.	7. Drain oil, clean filter, and flush system.	—
8. Dirty reservoir breather(s) (clogged).	8. Clean breather(s).	—
9. Pump front cover bolts loose.	9. Tighten bolts.	—
OIL HEATS		
1. Relief valve pressure set incorrectly.	1. Adjust relief valve.	—
2. Contaminated oil.	2. Drain oil, clean filter, and flush system.	—
3. Incorrect viscosity oil (too light or heavy).	3. Use Case Hi-Lo TCH Oil.	—
4. Pump running too fast.	4. Reduce engine R.P.M.	See pages 3D-3, 3D-19
5. Holding control valve open causing relief valve to by-pass.	5. Reduce time relief valve is allowed to by-pass.	—
6. Hydraulic oil level too low.	6. Fill to proper level and check for leaks.	—
7. Restriction in hydraulic lines due to foreign matter, bent tubes, or crushed hoses.	7. Check hydraulic circuits.	—
FAILURE OF PUMP TO DELIVER OIL		
1. Hydraulic oil level too low.	1. Fill to proper level and check for leaks.	—
2. Clogged or collapsed suction line to pump.	2. Check suction line for restriction.	—
3. Air leaks in suction line.	3. Check suction line for leaks.	—
4. Worn pump.	4. Check pump output.	—
5. Diverter valve in wrong position.	5. Change diverter valve position.	—

PROBABLE CAUSE	SUGGESTED REMEDY	REFERENCE
LOSS OF OPERATING PRESSURE IN SYSTEM		
1. Defective pump.	1. Check pump output.	(See failure of pump to deliver oil above.)
2. Hydraulic oil level too low.	2. Fill to proper level and check for leaks.	—
3. Incorrect main relief valve setting.	3. Check relief valve pressure.	See page 3D-19
4. Relief valve leaking internally.	4. Check seat, poppet, and "O" rings for cracks, pits, wear, etc.	See page 3D-10
5. Broken relief valve spring.	5. Replace spring and check pressure.	See page 3D-10
6. Relief valve action sluggish.	6. Thoroughly clean relief valve with solvent.	See page 3D-19
7. Nut off piston rod.	7. Replace nut.	See page 3D-25
8. Broken piston.	8. Replace piston.	See page 3D-25
9. Worn packing.	9. Replace packing.	See page 3D-25
10. Defective secondary relief valve in circuit being actuated.	10. Check secondary relief valve with hand pump.	See page 3D-20
11. Oil leaking from system.	11. Check for external leaks.	—
12. Regenerative circuit check valve not closing or "O" ring leaking.	12. Remove regenerative cartridge — check the poppet and "O" ring.	See page 3D-5
SYSTEM INOPERATIVE		
1. Hydraulic oil level too low.	1. Fill to proper level and check for leaks.	—
2. Clogged or collapsed suction line to pump.	2. Check suction line for restriction.	—
3. Defective pump.	3. Check pump output.	—
4. Incorrect main relief valve setting.	4. Check relief valve pressure.	See page 3D-19
5. Broken relief valve spring.	5. Replace spring and check pressure.	See page 3D-5
6. Nut off piston rod.	6. Replace nut.	See page 3D-25
7. Broken piston.	7. Replace piston.	See page 3D-25
8. Worn packing.	8. Replace packing.	See page 3D-25
9. Hydraulic lines damaged or improperly connected.	9. Replace damaged parts. Refer to Schematic Illustration.	See page 3D-42
10. Relief valve plunger not seating.	10. Disassemble relief valve, inspect, and clean parts.	See page 3D-5
11. Control valve spool is not travelling full stroke.	11. Check length of stroke in both directions.	See page 3D-5
12. Quick disconnects not fully engaged.	12. Engage completely.	—
13. Diverter valve in incorrect position.	13. Change diverter valve position.	See page 3D-18
CYLINDERS "CREEP" WHEN IN HOLD POSITION		
1. Internal leakage in cylinder.	1. Service cylinder.	See page 3D-25
2. Excessive clearance between valve spool and spool bore.	2. Replace valve.	See page 3D-5
3. Leakage past secondary relief valve (if in circuit).	3. Service secondary relief valve as required.	See page 3D-5
4. External leakage from valve, cylinder, or lines.	4. Service applicable component.	See page 3D-5
5. Valve spool not returned to neutral.	5. Check spool travel.	See page 3D-5
CYLINDER OPERATES SLIGHTLY (FALLS) IN OPPOSITE DIRECTION AS CONTROL LEVER IS FEATHERED		
1. Backhoe cylinder(s). Check poppet or poppet set not seated and sealing.	1. Check the poppet in valve section being actuated.	See page 3D-5
2. Control valve.	2. Lands in valve spool not properly aligning with valve body.	See page 3D-5

PROBABLE CAUSE	SUGGESTED REMEDY	REFERENCE
CYLINDER OPERATION TOO SLOW OR JERKY		
1. See "Hydraulic Oil Foams" above.		
2. See "Failure of Pump to Deliver Oil" above.		
3. See "Loss of Operating Pressure in System" above.		
4. See "External Oil Leakage from Pump" above.		
5. See "System Inoperative" above.		
6. Leakage past secondary relief valve (if in circuit).	6. Service secondary relief valve as required.	See page 3D-5
7. Valve spool not completely open.	7. Check spool travel.	See page 3D-5
8. Two spools operated or "feathered" at same time.	8. Cylinder of least resistance will operate.	See page 3D-5
9. External leakage from valve, cylinder, or lines.	9. Service applicable component.	—
10. Partially restricted hydraulic oil filter.	10. Service hydraulic oil filter.	—
11. Engine speed too low.	11. Increase engine speed to recommended R.P.M.	See pages 3D-3, 3D-19
12. Secondary relief valves held open with chips or set too low.	12. Check for foreign matter and then check "O" rings on secondary relief valve; adjust secondary relief valve pressures.	See page 3D-5
13. Load larger than capacity.	13. Reduce load, see Operator's Instruction Manual.	—
14. Spool not moved to full stroke.	14. Check spool travel and control linkage.	—
15. Regenerative circuit check valve not closing because of chips, etc.	15. Remove regenerative check valve cartridge - inspect check poppet and "O" ring.	See page 3D-5
LOAD WILL NOT HOLD		
1. Oil leaking between spool and valve body.	1. Replace valve.	See page 3D-5
2. Worn cylinders.	2. Repack cylinders.	See page 3D-25
3. Secondary relief valve defective or held open.	3. Check secondary relief valve.	See page 3D-5
CONTROL VALVE BINDS		
1. Valve centering spring broken.	1. Replace spring.	See page 3D-5
2. Sludge in valve.	2. Clean system.	See page 3D-5
3. Control linkage misaligned.	3. Correct the linkage alignment.	See page 3D-5
4. Tie rods unevenly tightened or too tight — Backhoe valve.	4. Tighten bolts correctly.	See page 3D-5
5. Bent spool.	5. Replace valve or section.	See page 3D-5
6. Scored spool bore.	6. Replace valve or section.	See page 3D-5
7. Unable to push spool in — oil leakage past spool seal into cap.	7. Remove cap, if it contains oil, replace spool seal.	See page 3D-5
8. Valve not shimmed when installed.	8. Shim valve so mounting bolts do not distort valve housing.	See page 3D-5
9. Foreign material in spool cap.	9. Remove cap and service.	See page 3D-5
CONTROL ACTION DIFFERENT THAN DESCRIBED IN OPERATOR'S INSTRUCTION MANUAL		
1. Hydraulic circuits crossed.	1. Refer to Schematic Illustrations.	See page 3D-42

PROBABLE CAUSE	SUGGESTED REMEDY	REFERENCE
VALVE SPOOLS DO NOT RETURN TO NEUTRAL POSITION		
1. Broken spring.	1. Replace spring.	See page 3D-5
2. Bent spool.	2. Replace spool and housing or straighten.	—
3. Foreign particles.	3. Clean system and valve.	See page 3D-5
4. Misalignment of operating linkage.	4. Check linkage, lubricate if necessary.	—
5. Backhoe Valve — Tie rods tightened too tight.	5. Tighten evenly in increments of 5 ft. lbs. torque to 30 ft. lbs.	See page 3D-5
6. Valve not shimmed when installed.	6. Shim valve so mounting bolts do not distort valve housing.	See page 3D-5
OIL LEAKS AT EITHER END OF SPOOL		
1. Defective spool seals.	1. Replace seals.	See page 3D-5
BENT PISTON RODS		
1. Backhoe — improperly "walking" Backhoe with dipper arm.	1. Use correct procedure.	—
2. Failure to lubricate cylinder pivot pin.	2. Lubricate every ten hours.	See page 3D-4
3. Bent dipper arm or other misalignment.	3. Replace parts as required.	—
4. Inoperative secondary relief valve.	4. Check relief valve opening pressure.	See page 3D-5
5. Nut on piston rod loose.	5. Each time nut is removed, replace with new nut.	See page 3D-25
6. Hoses not connected to proper ports in Backhoe control valve.	6. Make certain secondary relief valve is connected in circuit to connect end of cylinder.	See page 3D-42
ABRUPT STOPPING OF BACKHOE SWING		
1. Defective criss-cross secondary relief valves.	1. Check secondary relief valves.	See pages 3D-8, 3D-24
BOOM OVERSWING		
1. Secondary criss-cross relief valve setting too low.	1. Replace or adjust secondary relief valve.	See pages 3D-8, 3D-23
2. Spool not returning to neutral position.	2. Check spool travel and linkage.	—
3. Secondary criss-cross relief valve held open.	3. Check relief valve for foreign matter.	See page 3D-5
4. Broken spring in secondary relief valve(s).	4. Replace spring.	See page 3D-5
5. Defective "O" ring on secondary relief valve.	5. Replace "O" ring.	See page 3D-5
6. Removal and installation of cylinder or other component leaving void in system.	6. Operate applicable control lever in both directions several times.	—
INSUFFICIENT BOOM DOWN PRESSURE		
1. Secondary relief valve pressure setting too low.	1. Check relief valve pressure.	See page 3D-23
2. Backhoe main relief valve setting too low.	2. Check Backhoe relief valve pressure.	See page 3D-19
3. Defective cylinder packing.	3. Check cylinder packing.	See page 3D-25
4. Defective boom spool in control valve.	4. Replace valve or section.	See page 3D-5

PROBABLE CAUSE	SUGGESTED REMEDY	REFERENCE
SWING CYLINDER OPERATES INCORRECTLY		
1. Insufficient power.	1. Check secondary relief valve pressures.	See page 3D-23
2. Defective cylinder.	2. Check cylinders.	See page 3D-25
3. Defective "O" rings on secondary relief valves.	3. Service relief valves.	See page 3D-5
4. Broken springs in secondary relief valves.	4. Check springs in secondary relief valves.	See page 3D-5
HOSE FAILURES		
1. Outer cover separated from wire braid.	1. Install hose properly — hose must not be twisted when fittings are tightened.	—
2. Fitting pulled from end of hose.	2. Improperly installed hose: (a) hose twisted; (b) torque applied to hose instead of fitting only; (c) improper hose installed; (d) dropping heavily loaded Loader at fast rate; then suddenly stopping load by returning control valve spool to neutral.	—
3. Secondary relief valve not opening.	3. Check secondary relief valve pressure.	See page 3D-23
AIR IN SYSTEM		
1. Removal and installation of cylinder or other component leaving void in system.	1. Operate applicable control lever in both directions several times. Swing cylinders with ports on bottom may not bleed easily.	—

12. SCHEMATIC ILLUSTRATION

Use the Schematic Illustration to trace the various hydraulic circuits. Keep in mind that the Schematic Illustration is drawn to show the flow of the various circuits and relative location of components — THEY DO NOT NECESSARILY ILLUSTRATE (PICTORIALLY) THE LOCATION OF ANY GIVEN COMPONENT.

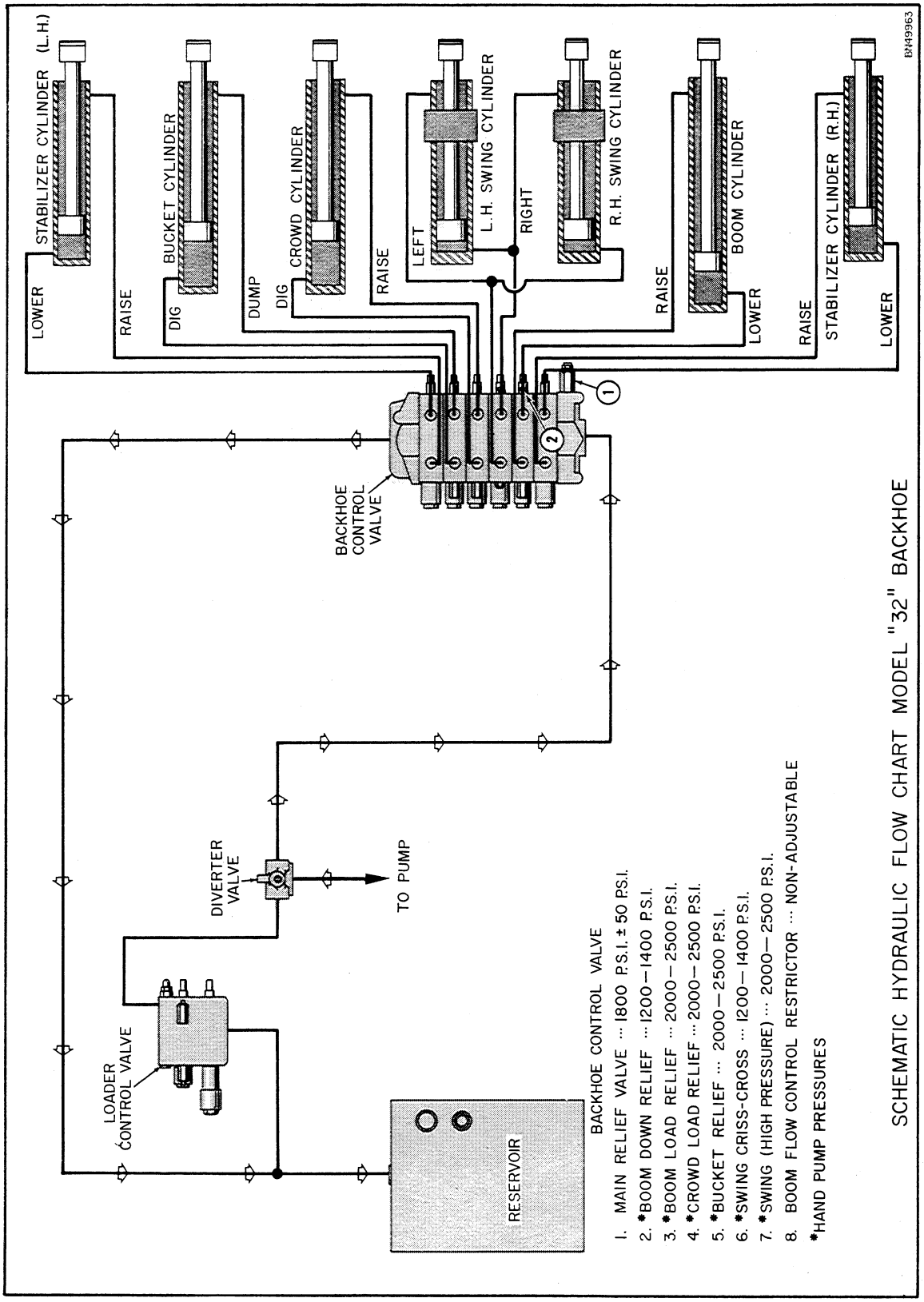

Figure 102 - Model 32 Backhoe

TORQUE TO BE USED IN TIGHTENING GRADE 5 CAPSCREWS, BOLTS WITH NON-HEAT-TREATED NUTS.

COARSE THREAD — N.C.		FINE THREAD — N.F.	
SIZE	* TORQUE	SIZE	* TORQUE
1/4 - 20	9-11	1/4 - 28	10-12
5/16 - 18	17-21	5/16 - 24	19-24
3/8 - 16	35-40	3/8 - 24	35-40
7/16 - 14	50-55	7/16 - 20	55-60
1/2 - 13	80-85	1/2 - 20	90-95
9/16 - 12	120-125	9/16 - 18	130-140
5/8 - 11	165-175	5/8 - 18	190-200
3/4 - 10	290-300	3/4 - 16	320-330
7/8 - 9	430-450	7/8 - 14	480-490
1 - 8	660-680	1 - 14	700-720
1 1/8 - 7	1040-1060	1 1/8 - 12	1080-1120
1 1/4 - 7	1250-1300	1 1/4 - 12	1350-1400
1 3/8 - 6	1800-1850	1 3/8 - 12	1900-1950
1 1/2 - 6	2350-2400	1 1/2 - 12	2500-2550

* Torque values are based on dry assembly; when lubricated reduce values 10 percent.

NOTE: The CASE CORPORATION **reserves the right to make improvements in design or changes in specifications at any time without incurring any obligation to install them on units previously sold.**

SECTION

3D

SERVICING THE

MODELS

"33" AND "34"

BACKHOE

PRINTED IN U.S.A.

TABLE OF CONTENTS

INTRODUCTION 3D-3
DEFINITION OF "RIGHT HAND" AND "LEFT HAND" 3D-4
SERIAL NUMBER 3D-4
LUBRICATION 3D-5
SPECIFICATIONS 3D-6
Model 33 and 34 Backhoes 3D-6
Model 33 Extendahoe 3D-8
Hydraulic Specifications 3D-10
Bucket Specifications 3D-10
Diagram of Hydraulic System 3D-11
REMOVING BACKHOE AS COMPLETE UNIT 3D-12
DISASSEMBLING THE DIPPER, BUCKET, AND BOOM 3D-14
INSTALLING BOOM. DIPPER, AND BUCKET 3D-20
REPLACING THE SWING TOWER 3D-22
REPLACING CONTROL TOWER PARTS 3D-25
REPLACING BACKHOE MOUNTING PARTS 3D-26
SERVICING BUCKET EDGES AND TEETH 3D-28
Standard Buckets 3D-28
Hi-Capacity Buckets 3D-30
SERVICING THE BUSHINGS 3D-31
TESTING SECONDARY RELIEF VALVES WITH HAND PUMP 3D-32
TESTING RELIEF VALVES WITH A PRESSURE GAUGE 3D-37
ADJUSTING RELIEF VALVES 3D-38
BACKHOE CONTROL VALVE 3D-39
Trouble Shooting 3D-39
Specifications 3D-41
Servicing Model 34 Backhoe Control Valve 3D-43
Servicing Model 33 Backhoe Control Valve 3D-53
DIVERTER VALVE 3D-61
HYDRAULIC CYLINDERS 3D-62
Specifications 3D-62
Trouble Shooting 3D-63
Removing Backhoe Cylinders 3D-64
Servicing a Typical Cylinder 3D-66
Replacing Piston Rod Eye Assemblies 3D-71
Servicing Swing Cylinders 3D-72
Servicing Model 33 Backhoe Boom Cylinder 3D-75
Servicing Model 34 Backhoe Boom Cylinder 3D-78
Servicing Model 34 Crowd and Bucket Cylinders 3D-80
Installing Cylinders 3D-83

INTRODUCTION

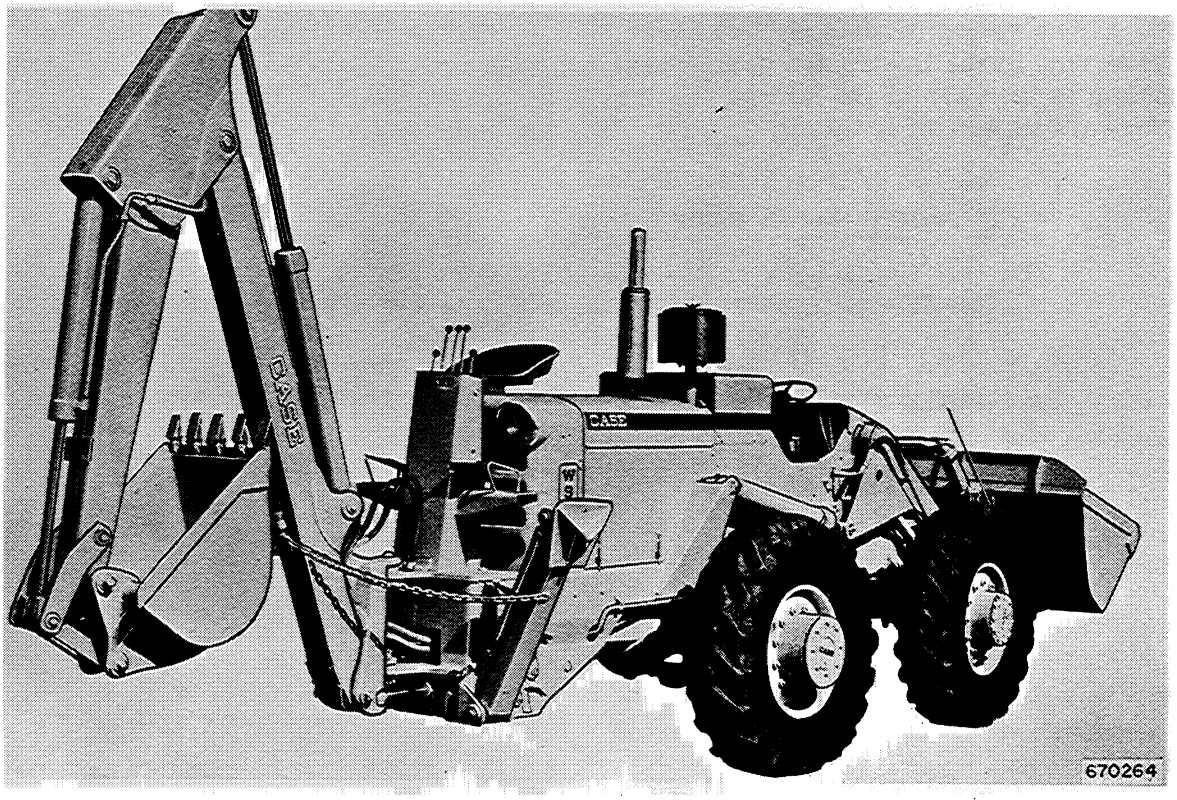

Figure 3D-1 - Model W-9B Loader with Model 33 Backhoe

This supplement covers the Models 33 and 34 Backhoe and Extendahoe as mounted on the following "W" Line Loaders:

W7 . . . . . Model 33 Backhoe
Model 33 Extendahoe

W9-B . . . . . Model 33 Backhoe
Model 33 Extendahoe
Model 34 Backhoe

W-10-B . . . . . Model 33 Backhoe
Model 33 Extendahoe
Model 34 Backhoe

The J. I. Case Company reserves the right to make improvements in design or changes in specifications at any time without incurring any obligation to install them on units previously sold.

DEFINITION OF "RIGHT HAND" AND "LEFT HAND"

The terms "right hand" and "left hand", when referring to the loader are determined by standing at the rear of the unit and facing in the forward direction of travel.

The terms "right hand" and "left hand", when referring to the backhoe, are determined as they appear to the operator sitting in the backhoe seat.

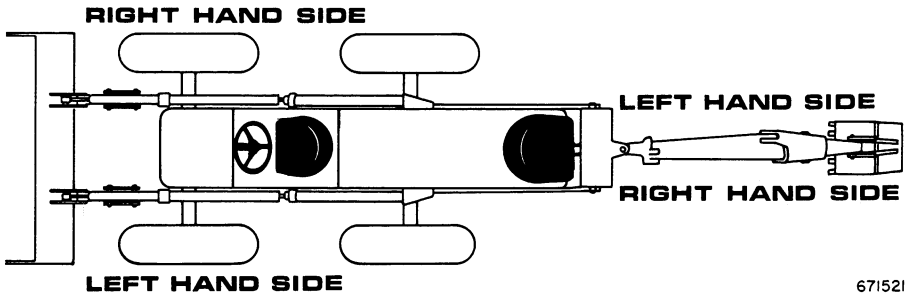

Figure 3D-2

SERIAL NUMBER

The backhoe serial and model number plate is attached to the right hand side of the control tower.

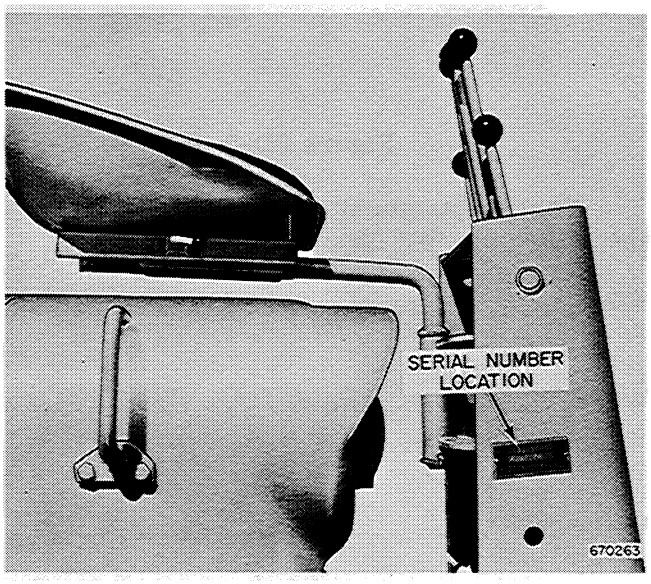

Figure 3D-3 - Serial and Model Number Plate

LUBRICATION

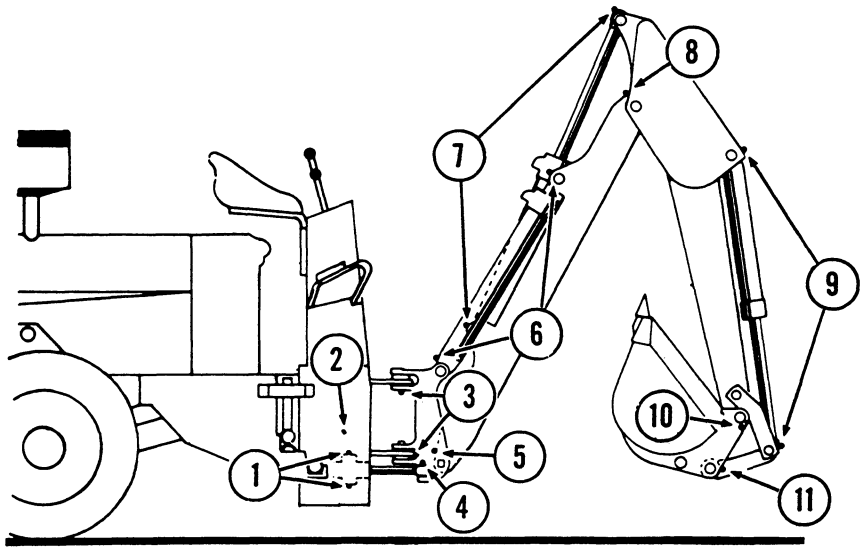

Figure 3D-4 - Lubrication Points

CHART OF ILLUSTRATED FITTINGS

1.	Swing Cylinder Trunnion	2 each side
2.	Stabilizer Cylinder	1 upper end each side
3.	Tower Swing Pins	(1 top, 1 bottom)
4.	Swing Cylinder Yokes	1 each side
5.	Boom Pivot Pin	1
6.	Boom Cylinder	1 each end
7.	Crowd Cylinder	1 each end
8.	Dipper Pivot Pin	1
9.	Bucket Cylinder	1 each end
10.	Bucket Pivot Pin	1
11.	Bucket Dump Link (Early Production Models)	1

RECOMMENDED LUBRICANT

Type . . . . . Lithium "soap-base" grease

Grade Recommendations

Below 32° F.	No. 1
32° F. to 90° F.	No. 2
Above 90° F.	No. 3

PROCEDURE

1. Before applying a grease gun to the pressure fittings, wipe all accumulated dirt from each tip. Lubricate until clean grease runs out.

2. Lubricate all fittings illustrated every 10 hours.

3. If the backhoe is operated in mud or water, lubricate the immersed fittings more often.

SPECIFICATIONS

Models 33 and 34 Backhoes

NOTE

Specifications marked with asterisk (*) conform to definition of the S.A.E. (Society of Automotive Engineers) or I.E.M.C. (Industrial Equipment Manufacturers Council), whichever is applicable.

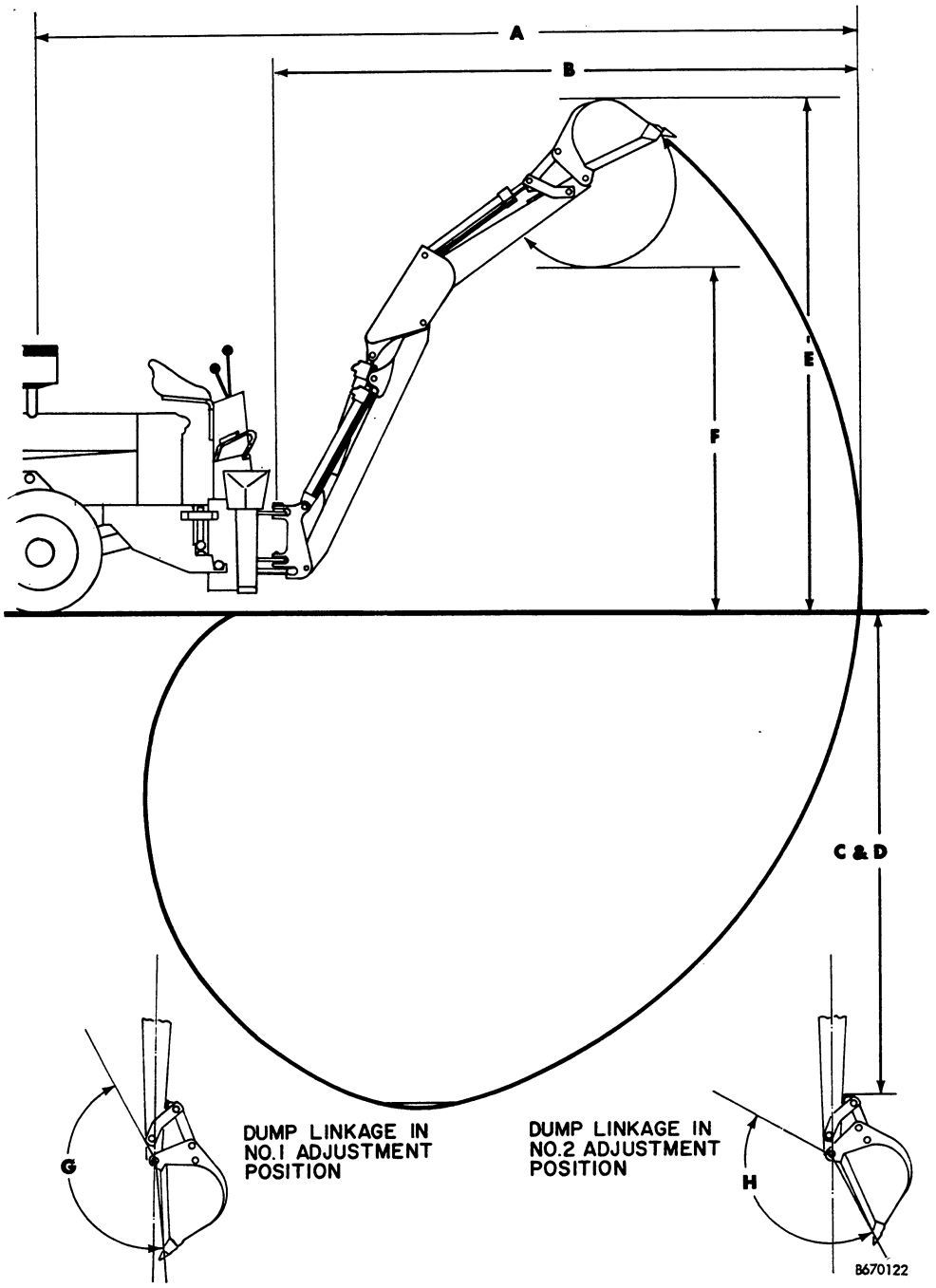

Figure - 3D-5

NOTE: All specifications taken with 24" trenching bucket.

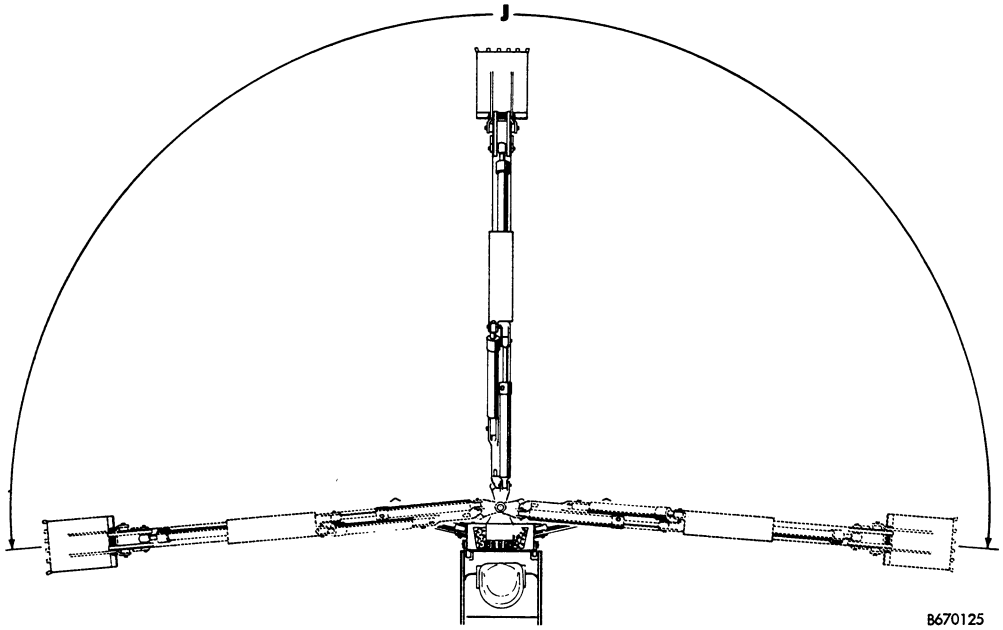

Figure 3D-6 - Model 33 and 34 Backhoes on Unit Loaders

		Model 33 Backhoe	Model 34 Backhoe
*A. Overall Reach (From Tractor Rear Axle)	W - 7	22' 6-1/2"	
	W - 9B	23' 3-1/2"	23' 3-1/2"
	W - 10B	23' 3-1/2"	23' 3-1/2"
*B. Digging Radius (From Pivot)		17' 1-1/2"	17' 1-1/2"
C. Digging Depth (Mfrs. Rating)		14' 4"	14' 4"
*D. Digging Depth		14' 0"	14' 0"
*E. Overall Height (Maximum)		15' 10"	15' 10"
*F. Loading Height (Clearance)		10' 11-1/2"	10' 11-1/2"
*G. Bucket Arc (No. 1 Adjustment Position)		157°	157°
*H. Bucket Arc (No. 2 Adjustment Position)		145°	145°
*J. Free Swing Arc		190°	190°
* Transport Height		11' 3"	11' 3"
* Digging Force		9,640 lbs.	11,440 lbs.
* Loading Height		10' 4-3/4"	10' 4-3/4"
* Loading Reach		85"	85"
* Stabilizer Spread (Operation Position)		107"	107"
* Stabilizer Spread (Transport Position)		81"	81"
Lift Capacity (Boom and Dipper Arm Extended)		2000 lbs.	2300 lbs.

NOTE

Specifications marked with asterisk (*) conform to definition of S.A.E. (Society of Automotive Engineers) or I.E.M.C. (Industrial Equipment Manufacturers Council), whichever is applicable.

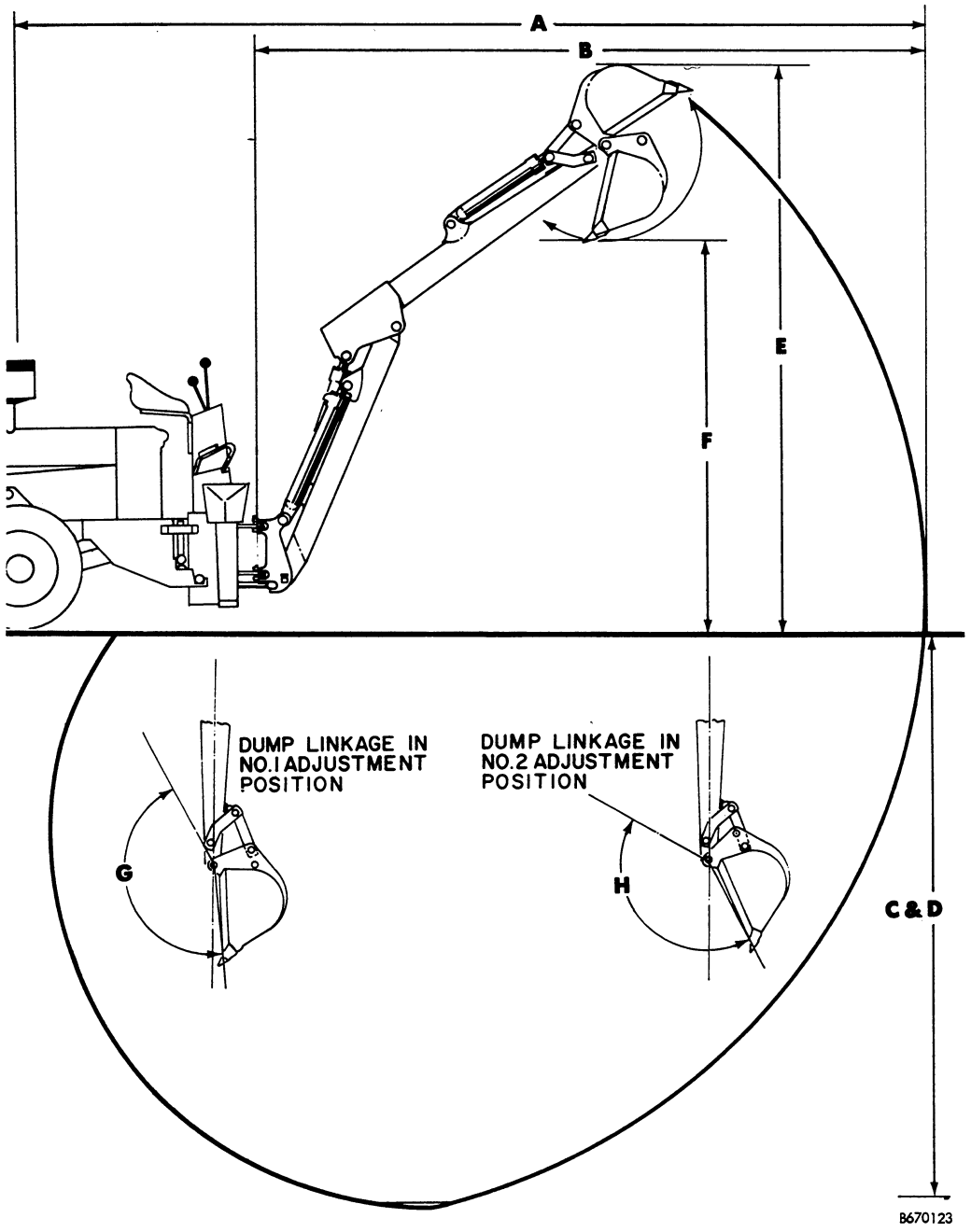

Figure - 3D-7

NOTE: All specifications taken with 24" trenching bucket.

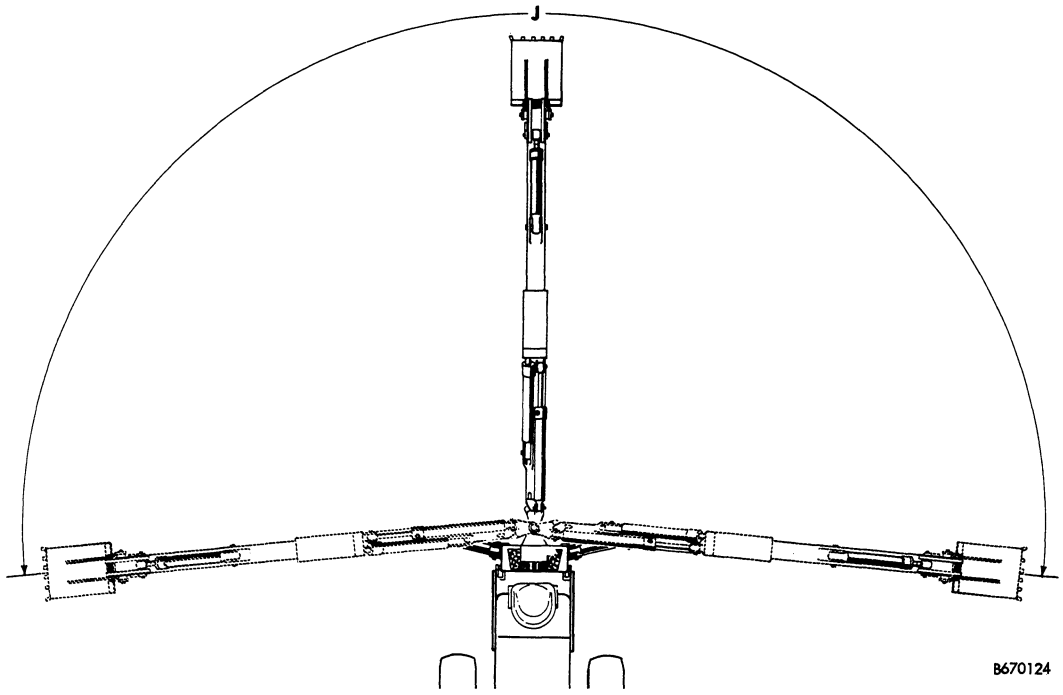

Figure 3D-8 - Model 33 Extendahoe on Unit Loaders

		14' Position	16' Position
*A.	Overall Reach (From Tractor Rear Axle) W-9B	23' 3-1/2"	24' 2-1/4"
	W-10B	23' 3-1/2"	24' 2-1/4"
*B.	Digging Radius (From Pivot)	17' 1-1/2"	19' 0-1/4"
C.	Digging Depth (Mfrs. Rating)	14' 4"	16' 4"
*D.	Digging Depth	14' 0"	16' 0"
*E.	Overall Height (Maximum)	15' 10"	16' 2"
*F.	Loading Height (Clearance)	10' 11-1/2"	11' 8"
*G.	Bucket Arc (No. 1 Adjustment Position)	157°	157°
*H.	Bucket Arc (No. 2 Adjustment' Position)	145°	145°
*J.	Free Swing Arc	190°	190°
*	Digging Force	9640 lbs.	9640 lbs.
*	Loading Height	10' 4-3/4"	11' 8"
*	Loading Reach	85"	113-1/2"
	Lift Capacity (Boom and Dipper Arm Extended)	2000 lbs.	1500 lbs.
*	Stabilizer Spread (Operation Position)	107"	
*	Stabilizer Spread (Transport Position)	81"	81"
*	Transport Height		11' 3"

HYDRAULIC SPECIFICATIONS

Hydraulic Pump
- Type . . . . . Positive displacement, gear type, driven off torque converter
- Capacity
  - W7 . . . . . 31 G.P.M. @ 2000 R.P.M. @ 2000 P.S.I.
  - W9-B and W10-B . . . . . 46 G.P.M. @ 2000 R.P.M. @ 2000 P.S.I.

Control Valve . . . . . See page 3D-41.

High Pressure Oil Lines . . . . . Steel tubing with brazed or flared fittings and wire braid, high pressure hose with crimped, full flow fittings.

Main Relief Valve Pressure Setting
- Model 34 Backhoe . . . . . 1950 P.S.I., allowable range 1950-2000 P.S.I.
- Model 33 Backhoe . . . . . 2200 P.S.I., allowable range 2150-2250 P.S.I.

Recommended Oil . . . . . Case Hi-Lo TCH Oil

BUCKET SPECIFICATIONS

	Width	Struck Capacity	Heaped Capacity	Weight
*Trenching	12"	2.21 cu. ft.	2.25 cu. ft.	217 lbs.
*Trenching	18"	3.68 cu. ft.	4.10 cu. ft.	258 lbs.
*Trenching	24"	5.20 cu. ft.	6.10 cu. ft.	295 lbs.
*Trenching	30"	6.75 cu. ft.	8.05 cu. ft.	330 lbs.
*Trenching	36"	8.54 cu. ft.	10.28 cu. ft.	376 lbs.
*Bellhole	12"	1.29 cu. ft.	1.30 cu. ft.	122 lbs.
*Bellhole	16"	1.59 cu. ft.	1.79 cu. ft.	151 lbs.
*Bellhole	30"	3.19 cu. ft.	3.84 cu. ft.	217 lbs.
*Bellhole-Graveyard	36"	4.10 cu. ft.	4.92 cu. ft.	256 lbs.
*Trenching, Hi-Capacity	24"	8.0 cu. ft.	9.14 cu. ft.	448 lbs.
*Trenching, Hi-Capacity	30"	10.0 cu. ft.	11.86 cu. ft.	478 lbs.

*Conforms to I.E.M.C. definition

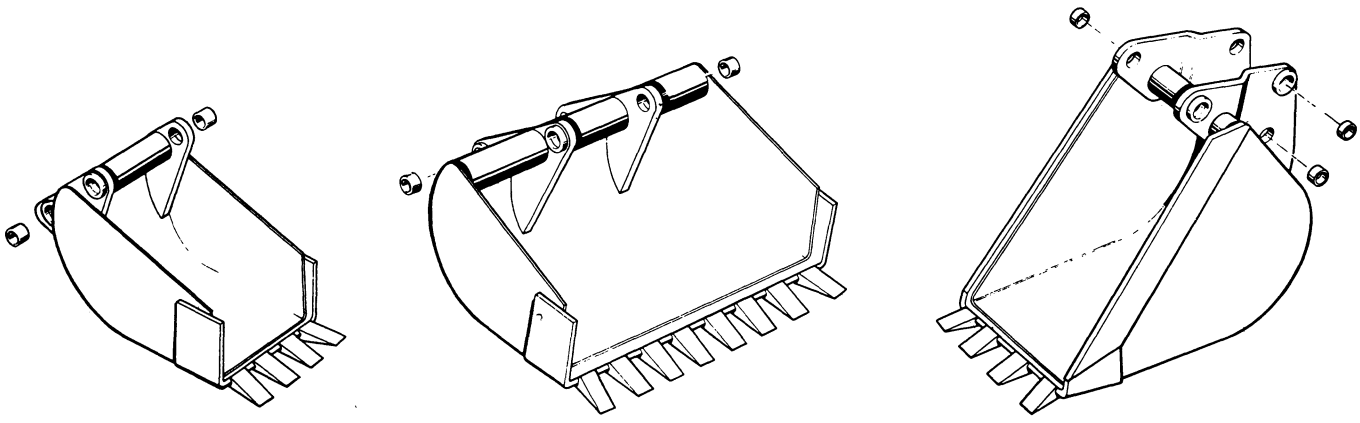

Figure 3D-9

DIAGRAM OF HYDRAULIC SYSTEM

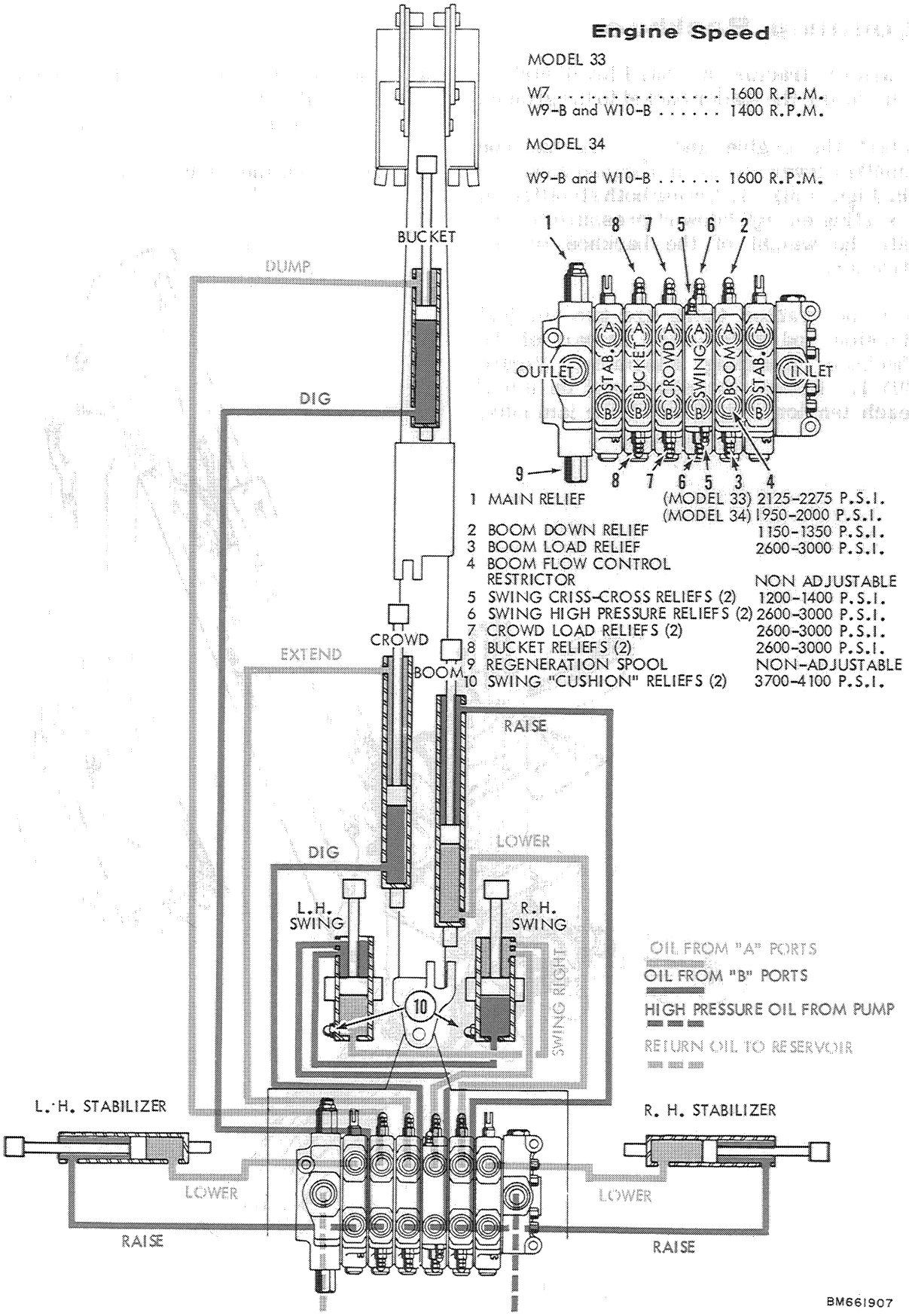

Figure 3D-10

REMOVING BACKHOE AS COMPLETE UNIT

Uncoupling Backhoe

1. Park the tractor on a hard level surface and lower the loader bucket to the ground.

2. Start the engine and use the backhoe control levers to form a tripod as shown in Figure 3D-11. Lower both stabilizers, exerting enough "down" pressure to take all the weight of the backhoe off the tractor.

3. On the tractor there are two vertical tension rod assemblies as part of the backhoe mounting assembly, Figure 3D-12. Loosen the clamp nut on top of each tension rod. Loosen the jam nuts.

4. Remove the retainer bolt and lockwasher from the two anchor pins that secure the anchor strap to the mounting frame.

5. Drive out the anchor pins.

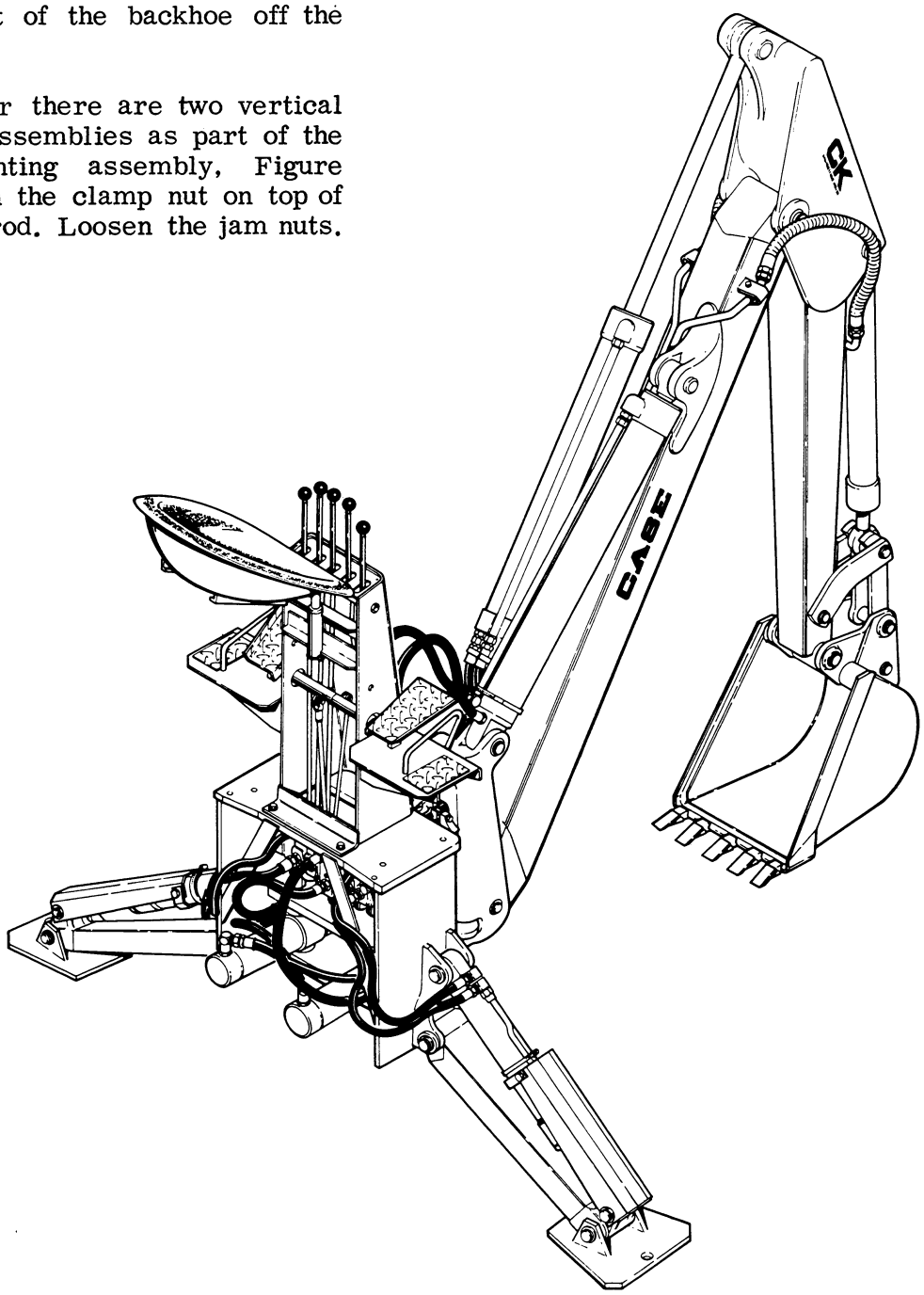

Figure 3D-11 - Forming a Tripod

6. Disconnect the dipper light, if so equipped.

7. Start the engine. With the stabilizers, raise the backhoe high enough so the studs on the lower mounting frame clear the lower support arms on the tractor. This is a distance of approximately 2 inches.

8. Drive the tractor forward to separate the backhoe and tractor. Shut off the engine and uncouple the hoses:

   a. Uncouple the pressure and return hoses at the "quick disconnect" couplings.

   b. On the tractor, join the return hose to the pressure hose as shown in Figure 3D-13.

   c. On the backhoe, the tubes to the inlet and outlet ports will remain uncoupled.

9. Drive the tractor away.

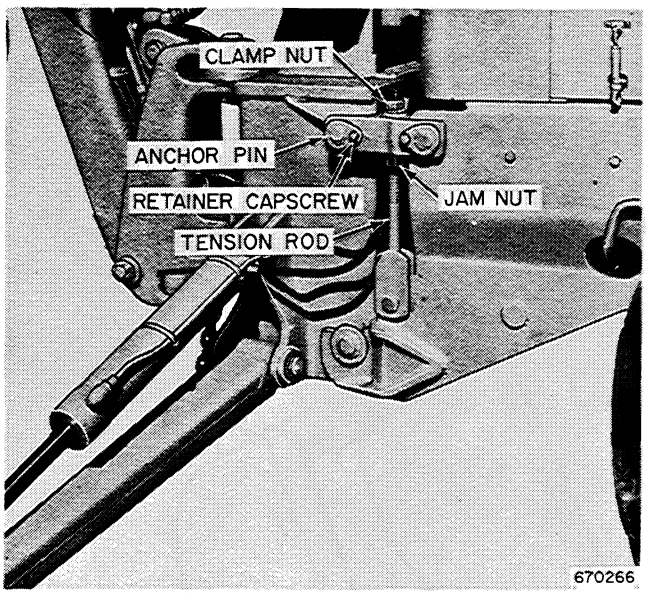

Figure 3D-12 - Uncoupling the Backhoe

Coupling Backhoe to Tractor

1. Line up the tractor with the backhoe and back up close to the backhoe mounting frame.

2. Stop the engine and reconnect the hydraulic lines.

3. Very carefully back the tractor into the backhoe. Adjust the height of the backhoe with the stabilizer if necessary. Lower the backhoe onto the lower support arms.

4. Install the anchor pins from the outboard side of the tractor and drive into place. When the anchor pins are in place, install the retainer capscrew and lockwasher and tighten securely.

5. Tighten the hex. nuts on the tension rods as follows:

   a. With the jam nut loose on the tension rod, tighten both clamp nuts to 200 ft. lbs. torque.

   b. Tighten both jam nuts to 100 ft. lbs. torque.

6. Connect dipper light wire if so equipped.

7. Raise stabilizers. The tractor is now ready to drive away.

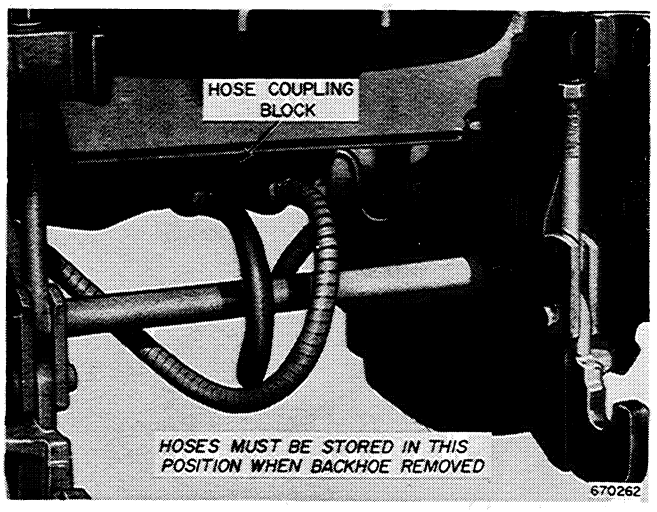

Figure 3D-13 - Hose Connections, Backhoe Removed

DISASSEMBLING THE DIPPER, BUCKET, AND BOOM

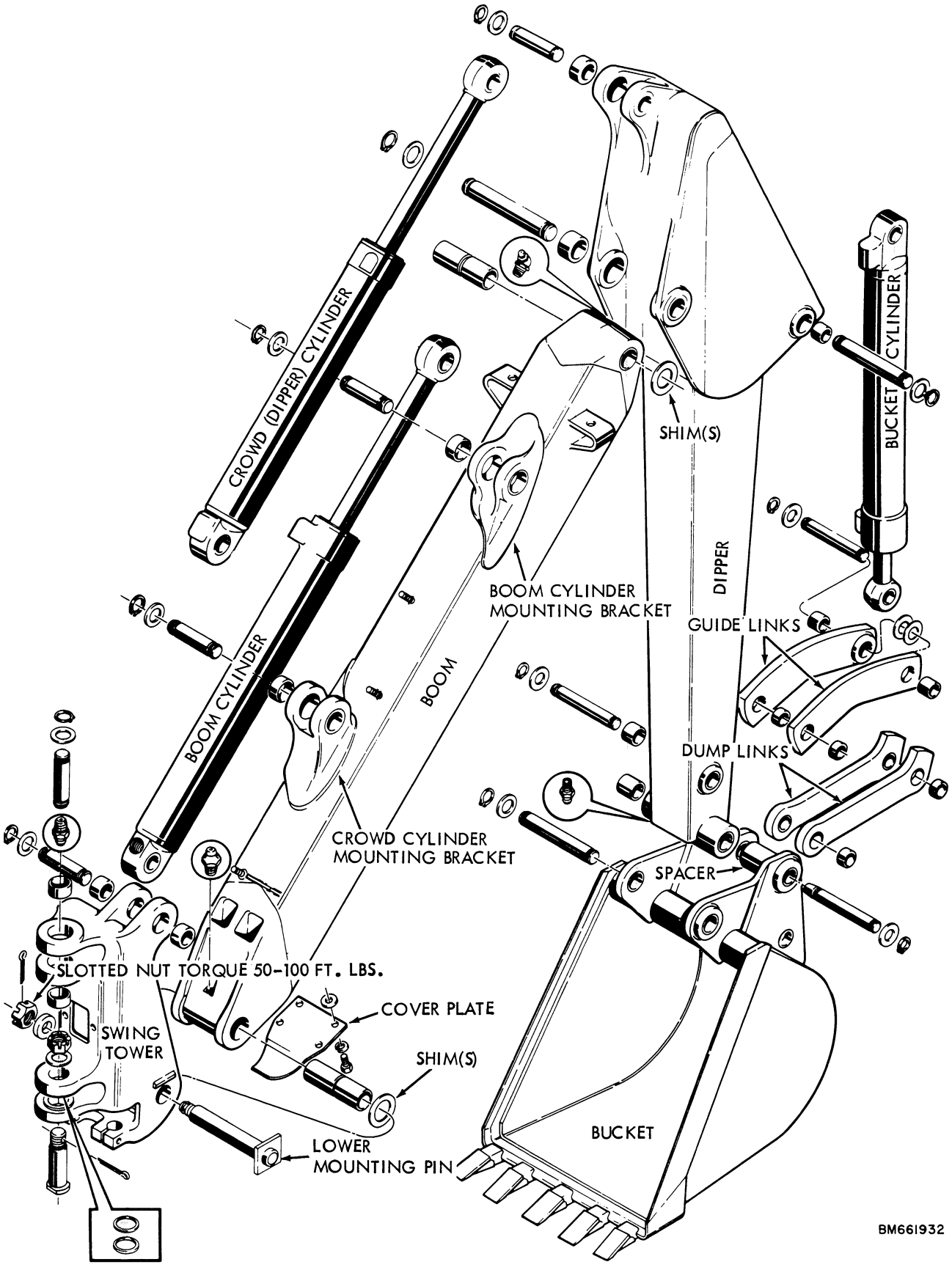

Figure 3D-14 - Model 34 Backhoe, Disassembled

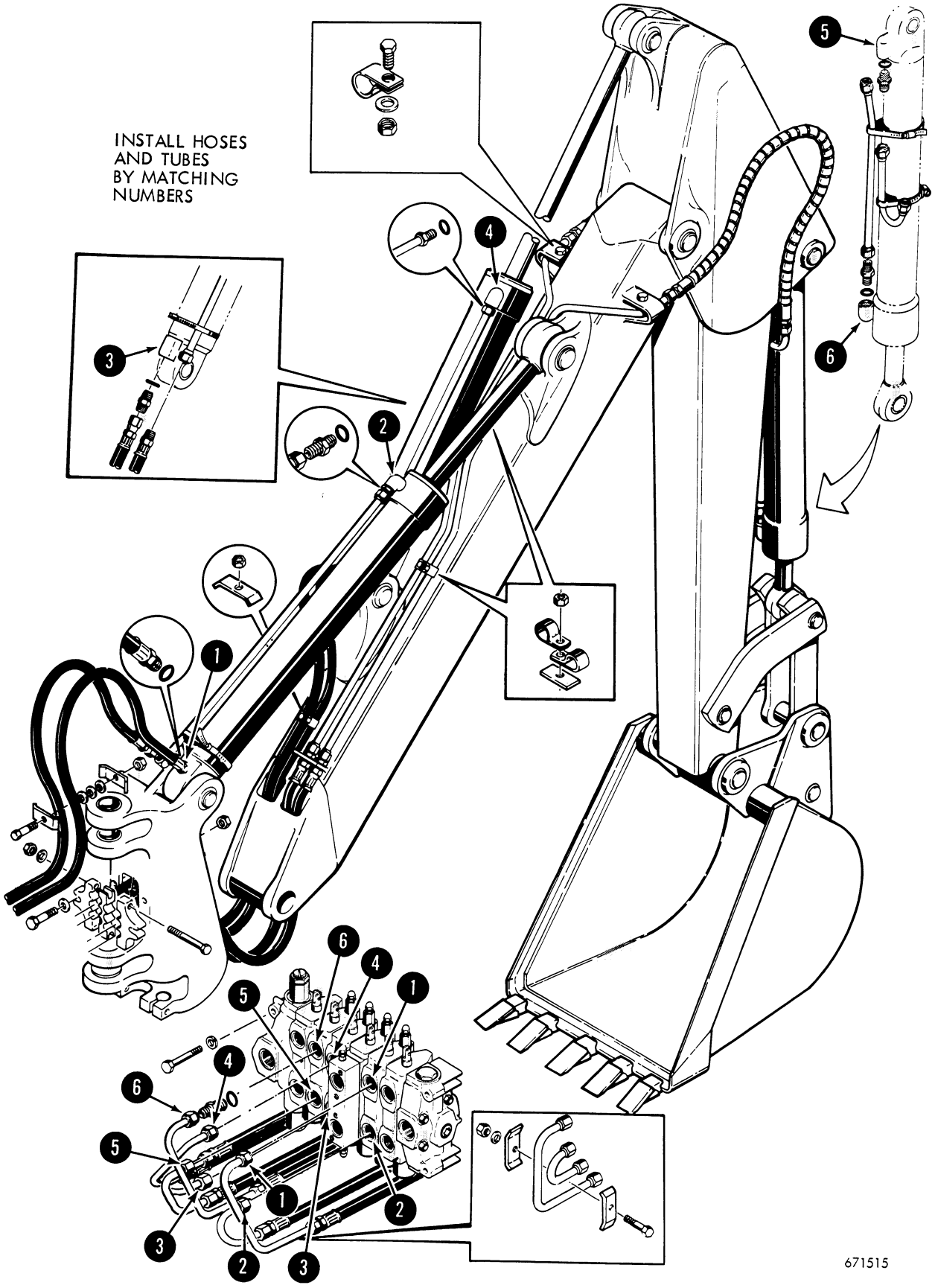

Figure 3D-15 - Model 34 Backhoe Hydraulics

IMPORTANT

WITH AN EXTENDABLE DIPPER, THE COLLAR AND EXTENSION ASSEMBLIES ARE AVAILABLE AS A COMPLETE ASSEMBLY ONLY. REFER TO THE CASE PARTS CATALOG.

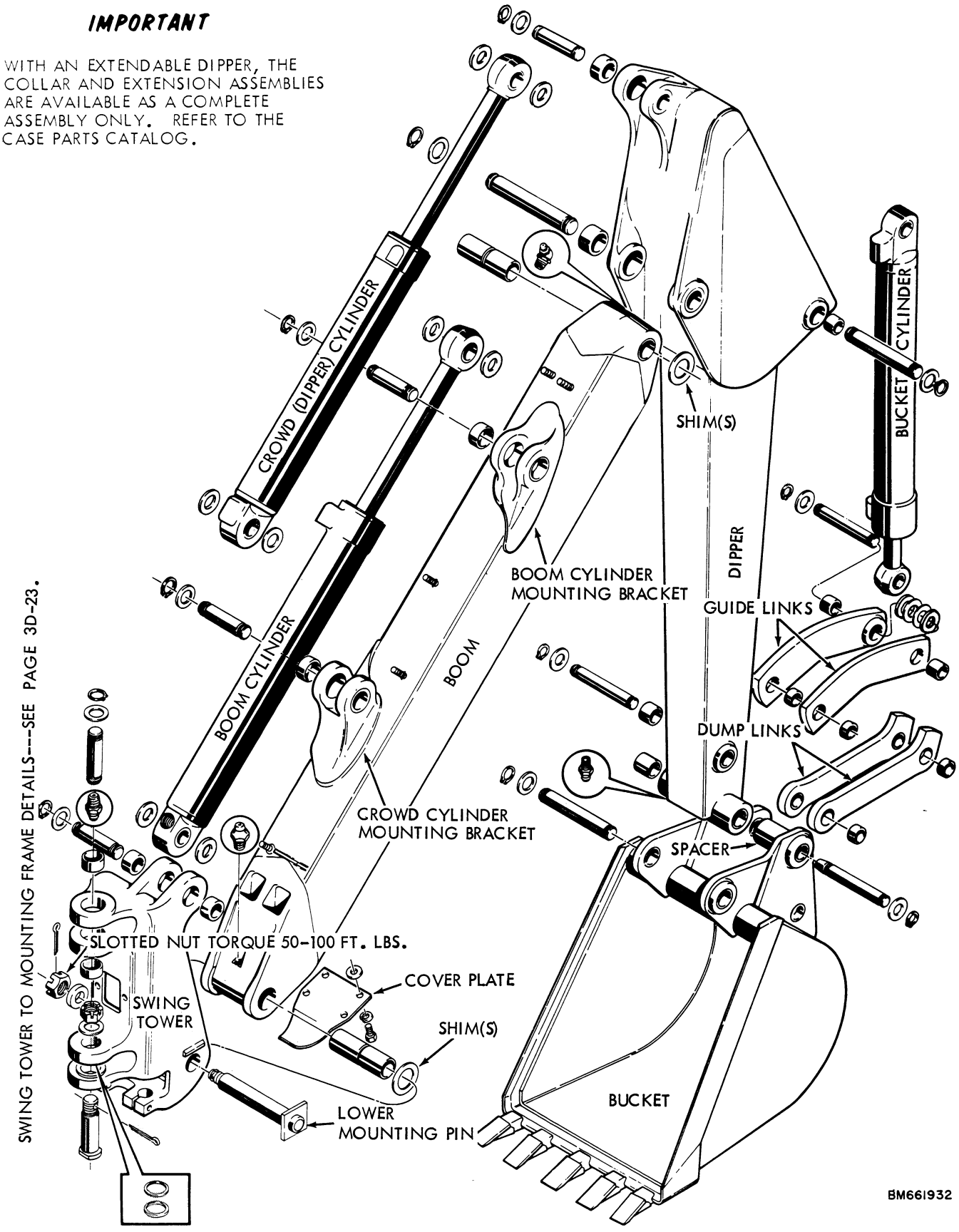

Figure 3D-16 - Model 33 Backhoe, Disassembled

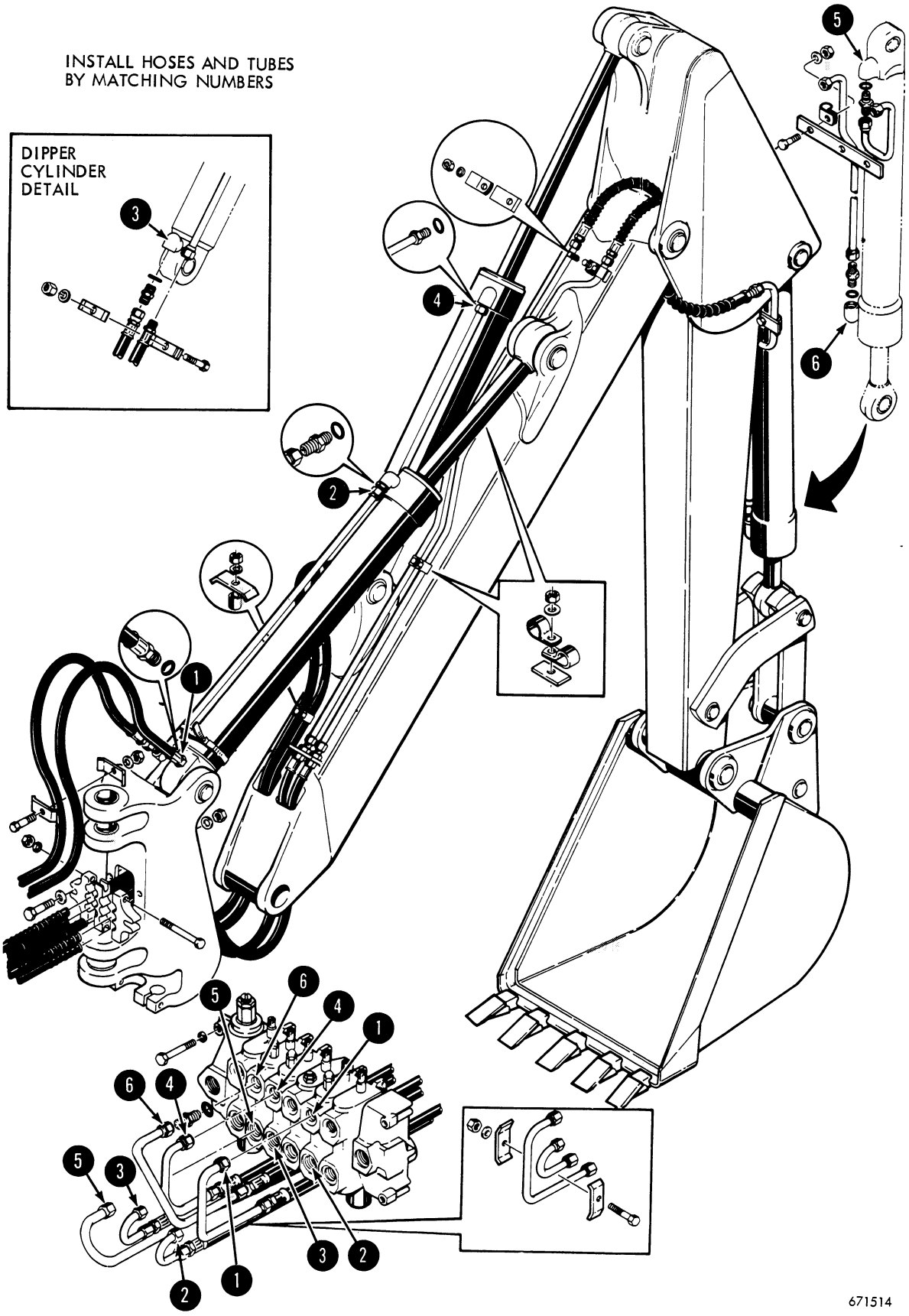

Figure 3D-17 - Model 33 Backhoe Hydraulics

Removing the Bucket

Refer to Figures 3D-14 through 3D-17.

1. Lower the bucket to the ground—have the bucket floor flat on the ground.

2. Remove a snap ring and washer from each of the two pins that must be removed—one that attaches the dipper arm to the bucket and one that attaches the dump links and spacer to the bucket. Drive out the pins.

Removing Dipper Arm

Refer to Figures 3D-14 through 3D-17.

1. Remove the bucket as described above.

2. Extend the dipper arm and lower the boom. Rest the end of the dipper arm on the ground. Disconnect dipper light, if so equipped. Remove bucket links pin from the dipper.

3. Attach a chain hoist to the dipper.

4. Remove bucket cylinder, if it is to be serviced:

   a. Clean the cylinder exterior and fittings with solvent.

   b. Operate the bucket control lever in both directions with the engine off to equalize pressures.

   c. Disconnect hoses from tubes at cylinder. Cap or plug exposed openings. Remove tubes, clamps, and attach hardware.

   d. Remove a snap ring and washer from both mounting pins—drive out the pins. Two extra washers will also be removed from the rod end of the cylinder.

5. Disconnect the dipper cylinder rod from the dipper.

   a. With the engine shut off, move the dipper control lever in both directions to equalize hydraulic pressures.

   b. Place a block under the dipper cylinder for support when the rod end mounting pin is removed.

   c. Remove a snap ring and washer from the rod mounting pin. Drive out the pin. On Model 33 Backhoes, two extra washers will also be removed.

6. As a precaution, place blocks under the boom or provide other suitable support. Remove a snap ring and washer from the dipper pivot pin—drive out this pin. Retain the shims that fall out. Lift the dipper arm from the backhoe.

Removing the Boom

Refer to Figures 3D-14 through 3D-17.

1. Remove the bucket and dipper arm as described above.

2. Place blocks on the floor, then extend the boom cylinder so the boom rests on the blocks. Attach a chain hoist to the opposite end of the boom near the swing tower.

3. Remove the crowd (dipper) cylinder:

   a. Clean the exterior of the cylinder and the fittings with solvent.

   b. Disconnect the hoses from the cylinder. Cap or plug all exposed openings.

   c. Remove a snap ring and washer from the pin at the closed end of the cylinder. Drive out the pin. On Model 33 Backhoes, two extra washers will also be removed.

4. Remove the boom cylinder:

   a. With the engine shut off, move the boom control lever in both directions to equalize hydraulic pressures.

b. Disconnect the hoses. Cap or plug all exposed openings.

c. Remove a snap ring and washer from the pin at each end of the cylinder. Drive out the pins. Two extra washers will be removed with each pin on Model 33 Backhoes.

5. Free the bucket and crowd cylinder hydraulic lines from the boom:

a. Remove the hose clamp mounted to the face of the swing tower.

b. Tag or mark hoses for identification. Disconnect the bucket cylinder hoses from the tubes along the boom.

c. Remove the cover plate from the underside of the boom. Remove hose clamps and hardware on boom as necessary.

d. Pull the hoses, one by one, completely free of the boom.

6. Remove lower boom mounting pin. First, remove the cotter pin that retains the slotted nut. Remove the slotted nut and washer. Drive out the pin. Retain the shims if any. Gently lower the boom to the ground.

INSTALLING BOOM, DIPPER, AND BUCKET

Refer to Figures 3D-14 through 3D-19.

1. Attach a chain hoist near the lower end of the boom and carefully raise into position to connect the boom to the swing tower.

2. Install the lower mounting pin. Make sure the square head of this pin is flush against the swing tower and not riding on top of the stop block. A maximum gap of 1/8" should exist between the boom and swing tower—install shims as necessary to achieve this gap. Install the washer and slotted nut. Torque the slotted nut to 50-100 ft. lbs., then install the cotter pin.

3. Carefully run the bucket and crowd cylinder hoses through the openings in the swing tower and frame of the boom. Install hose clamp on swing tower. Install cover plate on underside of boom. Clamp crowd cylinder hoses to boom.

4. Install the boom cylinder:

   a. Attach the closed end of the cylinder to the swing tower with a pin, two washers, and two snap rings. Washers fit on outside of mounting ears. On Model 33 Backhoe, install an additional washer (or spacer) on each side of the cylinder between the mounting ears.

   b. Install hoses, tubes, and clamps. Hose from closed end of cylinder goes to top port of control valve.

   c. The piston rod now can be positioned hydraulically. Attach the rod end of the cylinder to the boom with a pin, two washers, and two snap rings. On Model 33 Backhoes, install an additional washer (or spacer) on each side of the cylinder between the mounting ears. Grease fitting on the rod eye must point up.

5. Connect the tubes for the bucket cylinder to the hoses leading to the control valve. Attach tubes to top surface of boom with clamping hardware previously removed.

6. Raise the boom hydraulically into position for joing to the dipper. A 1/16" to 1/8" gap must be left between the boom and mounting ears of the dipper so the dipper can pivot freely without excessive "play". Shims are used to make the proper gap. Install the dipper-to-boom mounting pin with two washers and as many shims as necessary. Put an equal number of shims on each side—if an odd number is used, put the extra shim on the right hand side. Secure the pin with snap rings. Figure 3D-18.

7. Install the crowd (dipper) cylinder:

   a. Attach the closed end of the cylinder to the boom with a pin, two washers, and two snap rings. Washers fit on outside of mounting ears. On Model 33 Backhoes, install an additional washer (or spacer) on each side of the cylinder between the mounting ears.

   b. Install hoses, tube, and clamps. Hose from closed end of cylinder goes to lower port of control valve.

8. Reconnect the dipper light wire if the the tractor is so equipped.

   c. The piston rod now can be positioned hydraulically. Attach the rod end of the cylinder to the dipper with a pin, two washers, and two snap rings. On Model 33 Backhoes, install an additional washer (or spacer) on each side of the mounting ears.

9. Install the bucket cylinder:

   a. Attach the closed end of the cylinder to the dipper with a pin, two washers, and two snap rings.

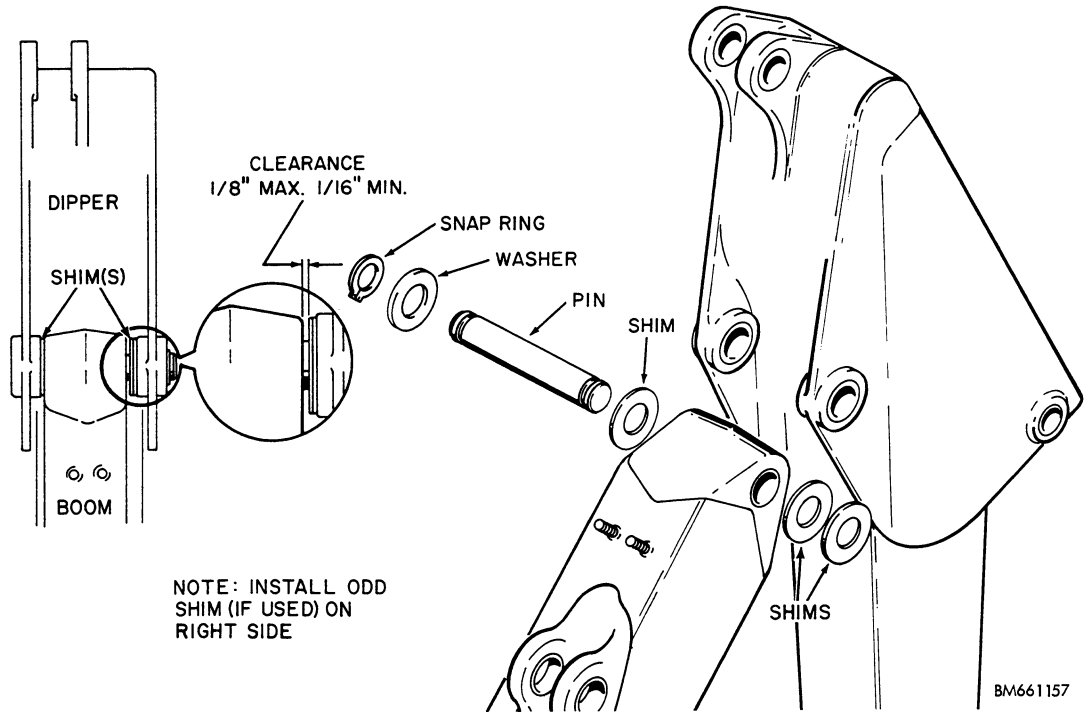

Figure 3D-18 - Installing Dipper to Boom

b. Install hoses, tubes, and clamps. Hose from closed end of cylinder goes to lower port of control valve.

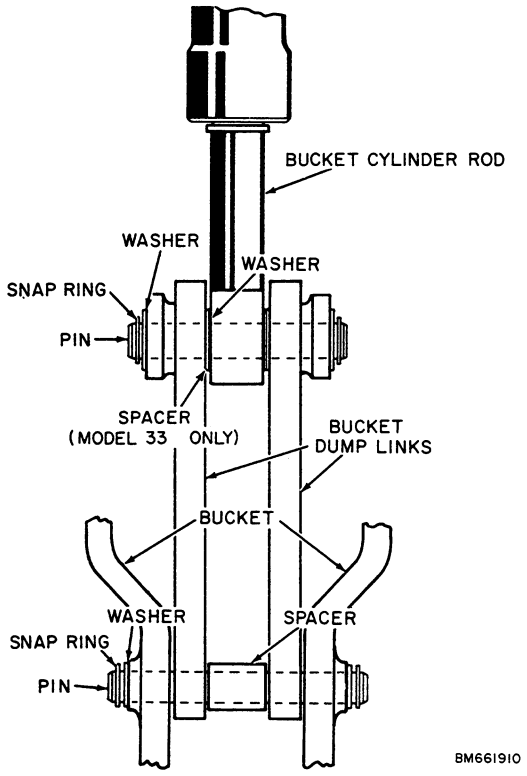

Figure 3D-19 - Installing Bucket

c. The piston rod now can be positioned hydraulically. Attach the rod end of the cylinder to the bucket linkage as shown in Figure 3D-19. Grease fitting on rod eye must point up.

10. Install the bucket and linkage as shown in Figure 3D-19. If installing a trenching bucket, note that the bucket contain two holes for the bucket links. Installation can be made in either hole, depending on type of digging desired.

11. Lubricate boom and dipper as shown in Figure 3D-4.

12. Bleed the air out of the hydraulic lines and cylinders by running the engine and actuating each cylinder back and forth until the cylinder operates smoothly. Check the hydraulic oil level after the bleeding operation is completed.

REPLACING THE SWING TOWER

Uncoupling Swing Tower From Mounting Frame

To replace the swing tower, it is necessary to "split" the backhoe—that is, disengage the swing tower from the mounting frame.

1. Lower the bucket to ground level. Retract the dipper cylinder and extend the boom cylinder so the entire length of the backhoe is fairly close to the ground—not top heavy.

2. Attach a chain hoist to the swing tower.

3. Remove the hose clamp from the face of the swing tower. Disconnect and tag for identification the hoses to the dipper and bucket cylinders at the tubes from the control valve. Pull hoses free of swing tower. Disconnect the boom cylinder hoses.

4. Disconnect the swing cylinder rods from the swing tower by first removing the two hex. capscrews, lockwashers, and nuts that retain the cylinder rod mounting pins. Use a long drift and drive the pins out the bottom of the swing tower.

5. Remove the upper and lower pins that mount the swing tower to the mounting frame:

   a. Remove the upper pin by first removing the snap ring and washer on top of the pin, then driving it down and out of the swing tower ears.

   b. Remove the lower pin by first removing the cotter pin that retains the slotted nut in position on the pin. Remove the slotted nut and washer. Drive the pin down and out of the swing tower ears.

6. The tractor now can be driven away.

NOTE

The self-aligning bushing in the bottom ear of the mounting frame now can be replaced, if necessary. See page 3D-31.

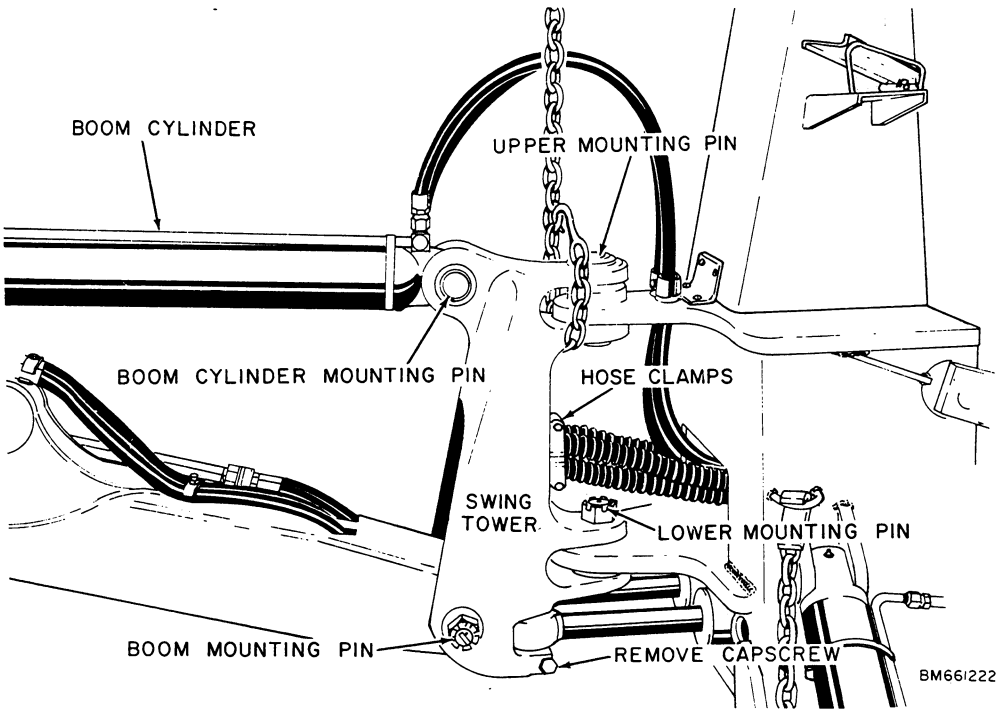

Figure 3D-20 - "Splitting" the Backhoe

Uncoupling Swing Tower From the Boom

1. With the swing tower freed from the mounting frame as described above, place a block under the boom or provide some other suitable means of support so it can be uncoupled from the swing tower. Whatever support is used, make sure it is strong and steady.

2. Place a good size block of wood between the boom cylinder and boom. Remove a snap ring and washer from the mounting pin at the closed end of the boom cylinder. Drive out the pin—allow the cylinder to rest on the block of wood. On Model 33 Backhoes, two extra washers (or spacers) will also be removed.

3. Remove the cotter pin from the boom-to-swing tower mounting pin at the bottom of the swing tower. Remove the slotted nut and washer and drive out the pin. Lift the swing tower away.

Installing Swing Tower

1. a. Attach a hoist to the swing tower and carry into position to mount to the boom.

   b. Attach the boom cylinder to the ears at the top of the swing tower with a pin, two washers, and two snap rings. On Model 33 Backhoes, install an additional washer (or spacer) on each side of the cylinder between the ears.

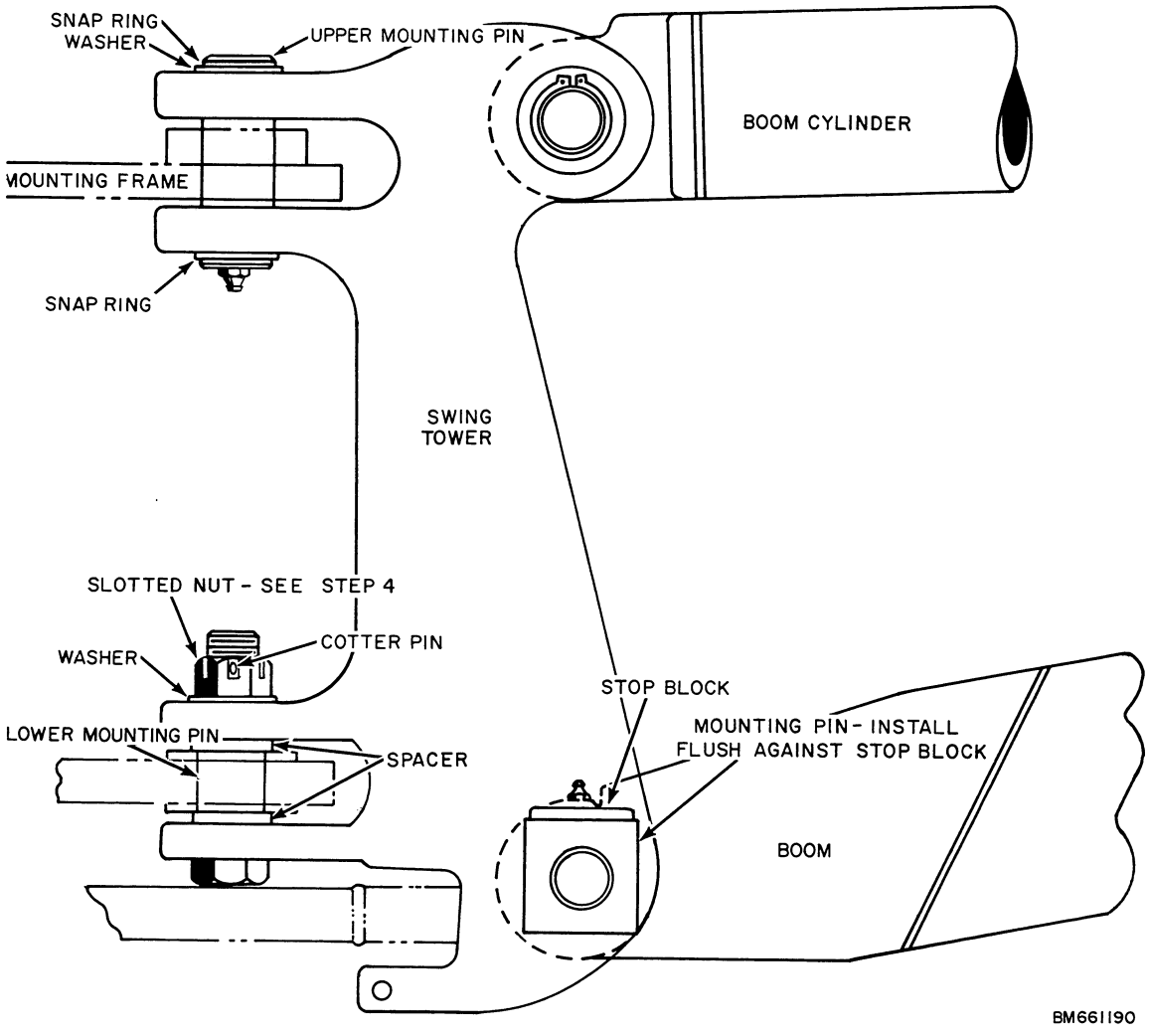

Figure 3D-21 - Installing Swing Tower

c. Install the lower mounting pin. Make sure the square head of this pin is flush against the swing tower and not riding on the stop block. A maximum gap of 1/8" should exist between the boom and swing tower—install shims as necessary to achieve this gap. Install the washer and slotted nut. Torque the slotted nut to 50-100 ft. lbs., then install the cotter pin.

2. Back the tractor into position to couple the swing tower to the mounting frame.

3. Install the upper pin, washer, and two snap rings. The washer fits between the snap ring and upper mounting ear. Install pin with grease fitting down.

4. Install the lower pin, driving it up from the underside of the swing tower. Install one spacer on each side of the mounting frame ear. Install the washer and slotted nut. Tighten the slotted nut to 550 ft. lbs., then tighten additionally until the cotter pin can be installed.

5. Connect the swing cylinder rods by driving pins from bottom of swing tower and securing with cap screws, lockwashers, and hex. nuts.

6. Connect the hoses and tubes to the backhoe control valve. Install the hose clamps to the face of the swing tower.

REPLACING CONTROL TOWER PARTS

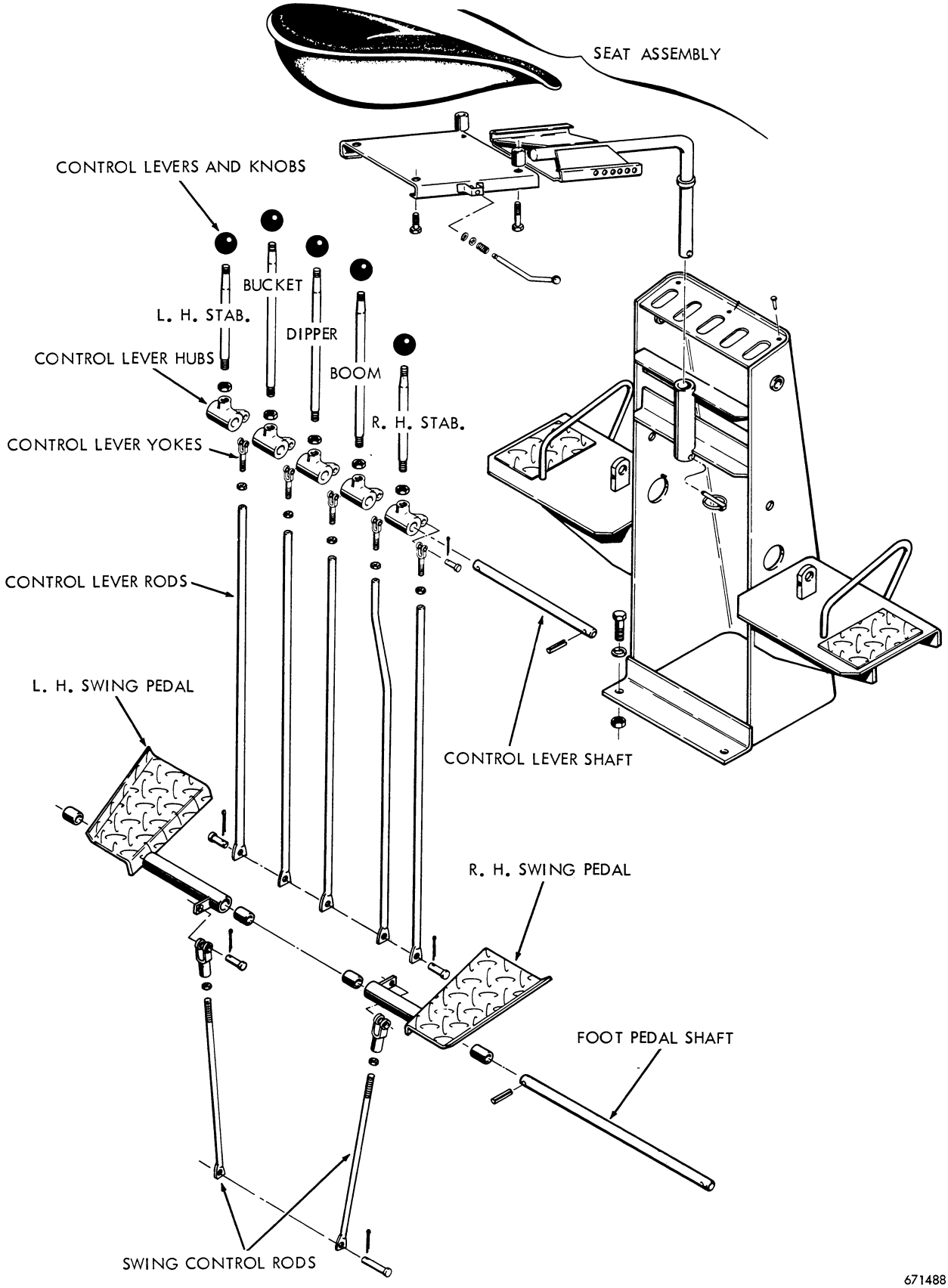

Figure 3D-22

REPLACING BACKHOE MOUNTING PARTS

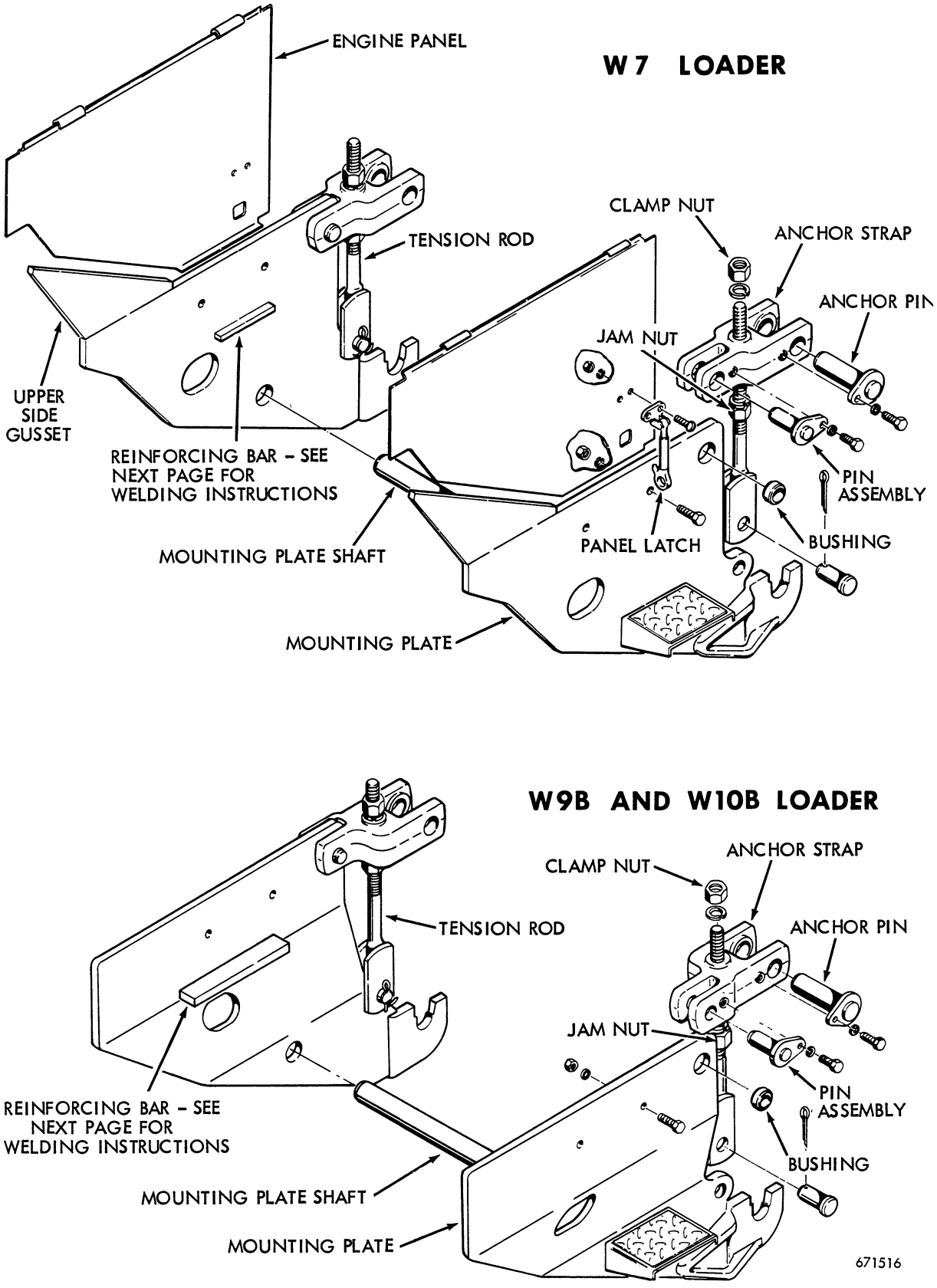

Figure 3D-23 - Backhoe Mounting Parts

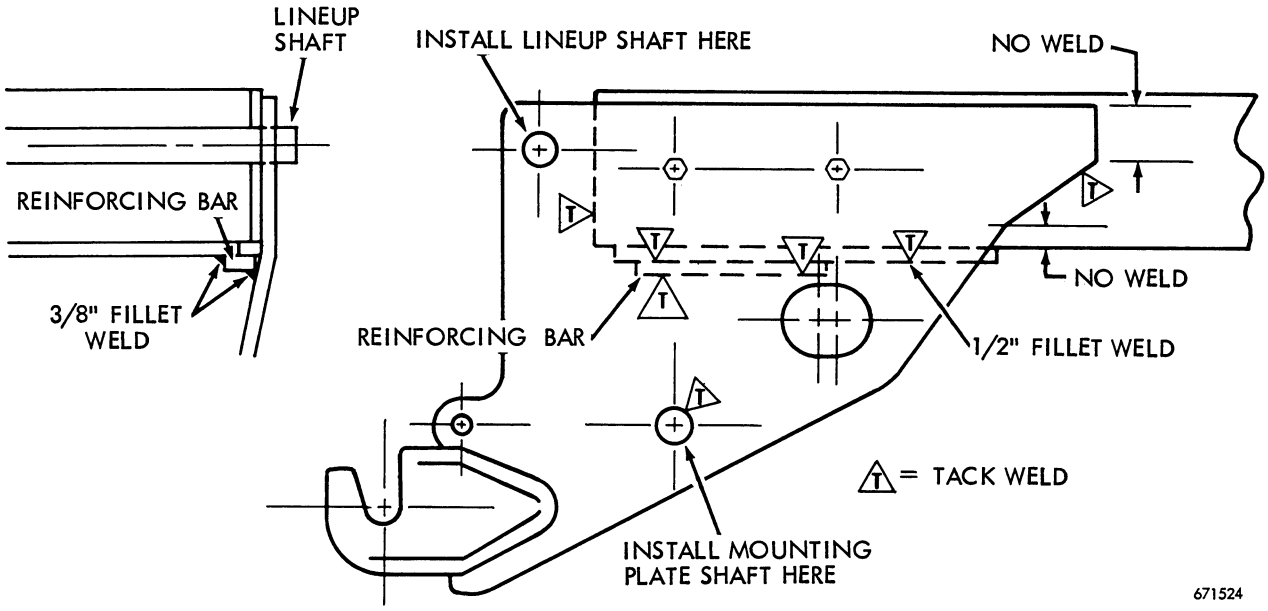

Figure 3D-24 - Installation of Mounting Frame Parts

Backhoe Frame Mounting Instructions

Refer to Figure 3D-24.

1. Remove the backhoe.
2. Remove damaged mounting plates, reinforcing bars, etc. Grind any old weld areas smooth.
3. Attach the mounting plates to the tractor with 1/2" x 1-3/4" capscrews, lockwashers, and hex. nuts. Do not tighten.
4. Insert a temporary 1/2" x 35" lineup shaft through the upper holes in the mounting plates. Adjust the mounting plates so the shaft rotates freely. Tighten capscrews—line up shaft must rotate freely.
5. Install mounting shaft.
6. Tack weld mounting plates and reinforcing bars to tractor on both sides as shown in Figure 3D-24. Tack weld the mounting shaft on both sides. Remove the lineup shaft after tack welding.
7. Weld parts as shown in Figure 3D-24. Use staggered welding to avoid warpage.
8. Install remaining parts shown in Figure 3D-23.

SERVICING BUCKET EDGES AND TEETH

(STANDARD BUCKETS ONLY FOR HI-CAPACITY BUCKETS, SEE PAGE 3D-30)

New cutting edges are available as replacements for worn or damage cutting edges. For trenching buckets, both the center and side cutting edges are available. On all buckets, the tooth shanks and tooth points are replaceable.

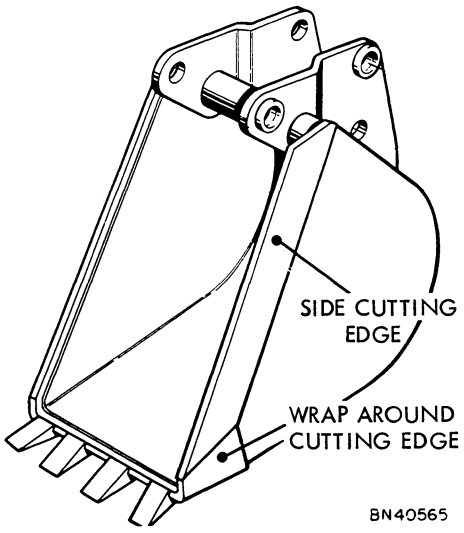

Figure 3D-25 - Bucket Cutting Edges

Removing Cutting Edge

1. Remove the ends of the wrap-around cutting edge with a gouge tip or cut off tip.

2. Lay a straightedge in the bucket so that it lines up with the front edge of the bucket sheet. Guide the cutting torch along the straightedge to cut through both the old weld and the cutting edge at the front lip of the bucket sheet.

3. Grind the old weld at the back of the cutting edge to form a breaking score.

4. Drive a cold chisel or wedge between the bucket sheet and cutting edge to break the back weld.

5. Grind the remaining weld flush with the bucket sheet to form an even surface for installing the new cutting edge.

6. On trenching buckets, remove the side cutting edges in a similar manner.

Installing Cutting Edge

Refer to Figure 3D-27.

The replacement cutting edges are of a high carbon steel; the bucket sheet is of low carbon steel. Therefore, use only a low hydrogen rod, such as Lincoln LH70. If the LH70 weld rod is not available, use another brand meeting A.W.S. specification E7016 or E7018.

To install the cutting edge, use a suitable 3/16" rod and proceed as follows:

1. Position the new cutting edge on the bucket in the same location as the original cutting edge. Note that the cutting edge extends 1-7/16" beyond the bucket sheet, Figure 3D-27. Clamp the cutting edge to the bucket and tack weld the ends of the cutting edge.

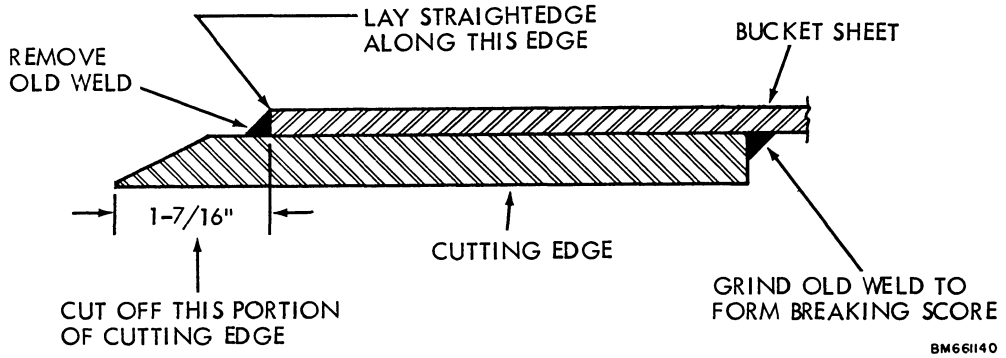

Figure 3D-26 - Removing Cutting Edge

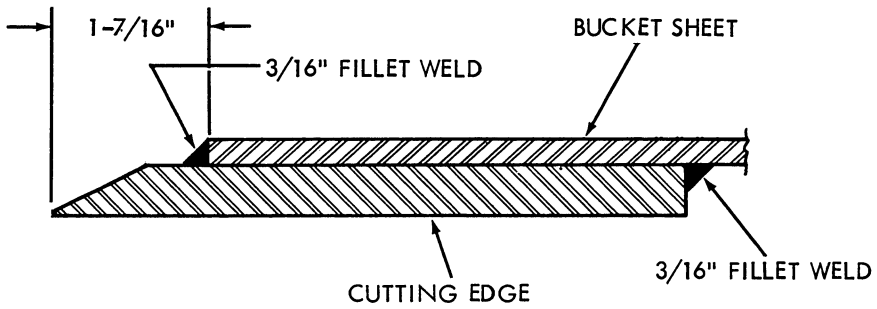

Figure 3D-27 - Welding the Cutting Edge

2. Place 3/16" fillet welds along the front and back edges. Butt weld where the ends of the center and side sections meet (trenching buckets only).

3. Weld the side sections in this manner (trenching buckets only).

Repairing Cutting Edge

For welding a cracked cutting edge, a 45° chamfer to full depth is recommended at the edges of the crack. This can be made with a portable grinder. Preheating the cutting edge to about 220° F. to 300° F. will reduce the possibility of further cracking when welded with the LH70 weld rod.

Replacing "Peened Type" Teeth and Shanks

Refer to Figure 3D-28.

REPLACING TEETH

1. Use a punch to raise the "peened down" portion of the tooth, allowing the tooth to be pulled off the shank. This can be done without heating the tooth, but if a torch is available, heat the "peened down" portion cherry red and straighten the lip while hot.

2. Install the new tooth by tapping the tooth onto the shank as far as it will go, then "peening down" the lip into the depression in the side of the tooth shank.

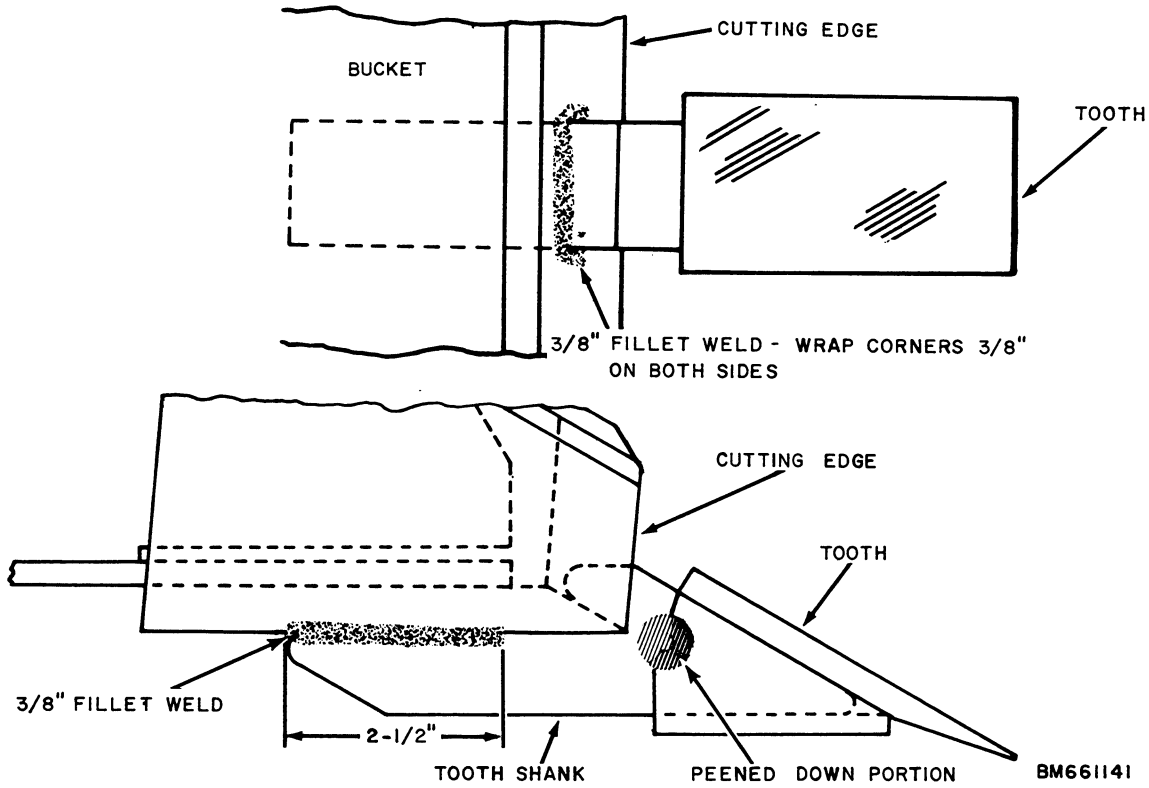

Figure 3D-28 - Replacing "Peened Type" Bucket Teeth and Shanks

REPLACING SHANKS

1. To remove a damaged tooth shank, grind off the weld or use a chisel. Grind the bucket smooth after the shank is removed.

2. Use a weld rod meeting A.W.S. specification E-7018 to weld the new shank to the bucket. Figure 3D-28.

Replacing "Flex Pin" Type Teeth and Shanks

Refer to Figure 3D-29.

REPLACING TEETH

1. Drive out flex pin and remove old tooth. Install new tooth on shank and drive flex pin into place.

REPLACING SHANKS

1. To remove a damaged tooth shank, grind off the weld or use a chisel. Grind the bucket smooth after the shank is removed.

2. Weld shanks per specifications shown in Figure 3D-29.

REPLACING HI-CAPACITY BUCKET EDGES AND TEETH

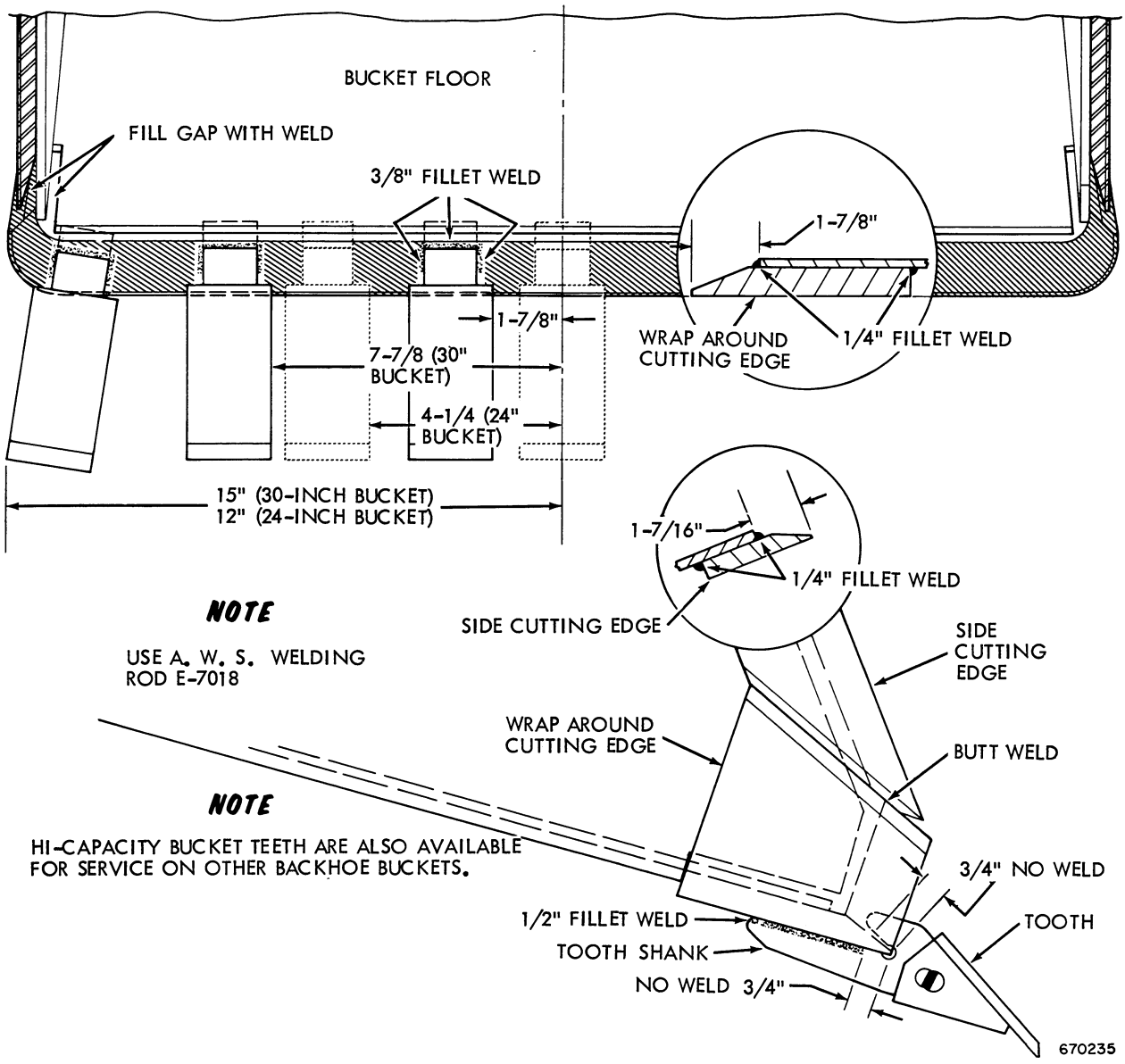

Figure 3D-29 - Welding Specifications for Hi-Capacity Buckets

SERVICING THE BUSHINGS

Lower Pivot Bushing

(SELF-ALIGNING TYPE)

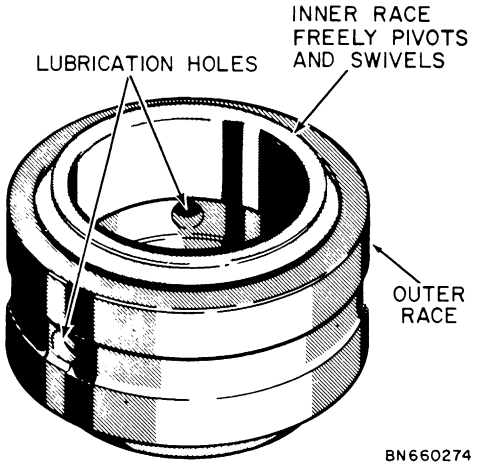

Figure 3D-30

The lower pivot bushing used in the mounting frame, on which the swing tower pivots, is a pivotal ball type (self-aligning) bushing. It is serviced as a complete assembly only.

1. Remove the snap ring from the top side of the mounting plate.

2. Drive the pivotal ball type bushing up and out from the underside of the mounting frame.

Bushings for Cylinders Buckets, Frames, etc.

SERVICE INFORMATION

Bushings are extensively used in the Case Backhoe at pivot points subject to extensive wear. These steel bushings are heat treated to the hardness required by the load placed on them. When worn, they are easily replaced.

Bushings should be regularly checked—by the customer in the field and whenever the machine is brought in for servicing. Any bushing which is severely worn should be replaced. A bushing should never be allowed to wear clear through.

Many bushings are located at lubrication points—in these cases, bushing life can be extended by faithfully following the recommended lubriation procedures. Complete lubrication instructions are contained in this section and in the Operator's Instruction Manual, packed with every unit.

REMOVAL

1. Always inspect a bushing carefully before deciding to remove it. If the wear is not obvious to the eye, the amount of wear can be measured with an inside micrometer or telescoping gauge and an outside micrometer. If the bushing is loose in its bore, it must be replaced.

2. Remove the bushing with a press and sleeve or a driver as shown. Chiseling or cutting a bushing out often damages the bushing seat.

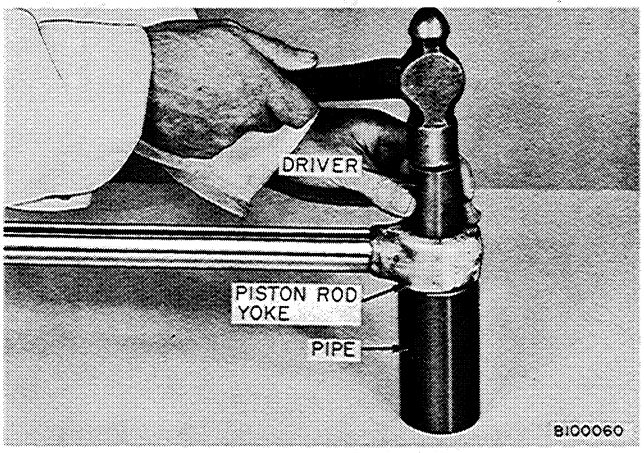

Figure 3D-31 - Removing Cylinder Bushing

INSTALLATION

1. Put a light coat of lubricant on the bushing or in its bore. Use a press or driver and install the bushing in its bore.

TESTING SECONDARY RELIEF VALVES WITH HAND PUMP

The handy, portable pump shown in Figure 3D-32 is available through the J. I. Case Special Tool Program for checking secondary relief valves.

This Commercial Shearing Pump holds one U.S. Gallon of oil—for year around use, fill with Case Hi-Lo TCH Oil. Its 9/16" piston ejects 1/4 cubic inch of oil per stroke (maximum).

The items listed below, when assembled as illustrated, make a versatile hand pump outfit for testing the backhoe secondary relief valves. In addition, the hand pump can also be used to test secondary relief valves in other Case machines. The hose and fittings are available through the Case Reusable Fittings and Flexible Hose Lines Program. Refer to Parts Catalog B1044.

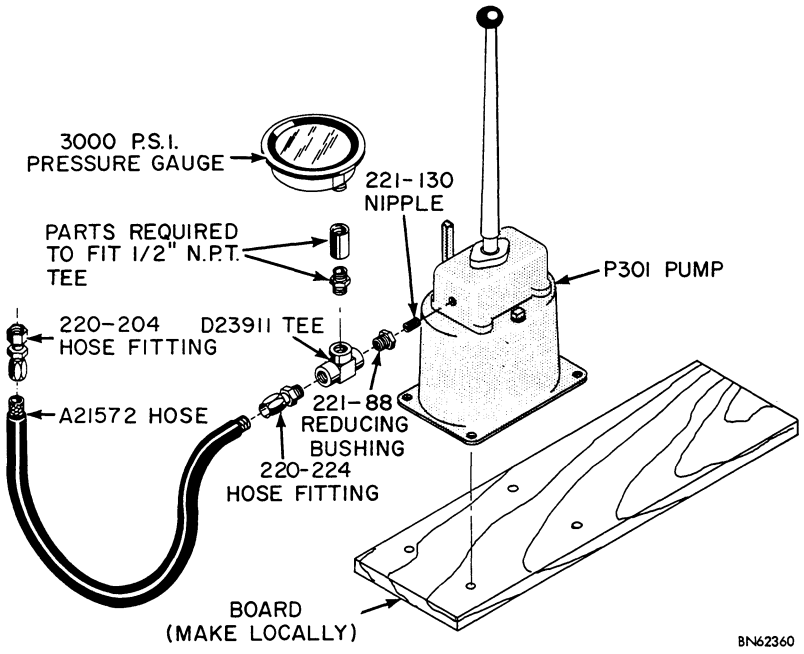

Figure 3D-32 - Hand Pump Assembly

Part No.	Description	Size
P-301	Hand Pump	
220-204	Swivel fitting for hose	5/8" J.I.C. female
220-224	Fitting for hose	1/2" N.P.T. male
A21572	Hose	1/2" (cut to length)
221-130	Steel pipe nipple	1/4" N.P.T.
D23911	Steel tee (female)	1/2" N.P.T.
221-88	Reducing bushing	1/2" N.P.T. to 1/4" N.P.T.
D12806	Special fitting (not illustrated) See page 3D-35.	

Pressure Specifications

Hand pump testing consists of directing a small amount of oil against a secondary relief valve and measuring the pressure required to force the relief valve poppet off its seat.

Because of its small capacity, the hand pump records "crack" pressure, the point at which the relief valve begins to bypass. "Crack" pressure is less than the "full flow" specification for the relief valve, which is taken at a much greater flow rate.

The "Hand Pump Specifications" column shows the approximate range within which each relief valve should "crack" or bypass with the hand pump actuated. The "Full Flow Specifications" column shows the pressure range within which the relief valve should bypass during normal operation.

Cylinder	Hand Pump Specification (P.S.I.)	Full Flow Specification (P.S.I.)
(APPLIES TO RELIEF VALVES ON MODEL 34 AND 33 BACKHOES)		
1. . . . Bucket (Both Ports)	2100-2500 . .	2750, range 2600-3000 @ 10 G.P.M.
2. . . . Dipper (Both Ports)	2100-2500 . .	2750, range 2600-3000 @ 10 G.P.M.
3. . . . Swing (Both Ports)	2100-2500 . .	2750, range 2600-3000 @ 10 G.P.M.
4. . . . Swing (Criss-Cross)	1000-1200 . .	1300, range 1200-1400 @ 10 G.P.M.
5. . . . Boom down (Port "A")	950-1150. . .	1250, range 1150-1350 @ 10 G.P.M.
6. . . . Boom (Port "B")	2100-2500 . .	2750, range 2600-3000 @ 10 G.P.M.
Swing Cylinder (Cushion) . . .	3200-3600 . .	3900, range 3700-4100 @ 5 G.P.M.

NOTE

Specifications are for oil at operating temperature, approximately 110°-125° F.

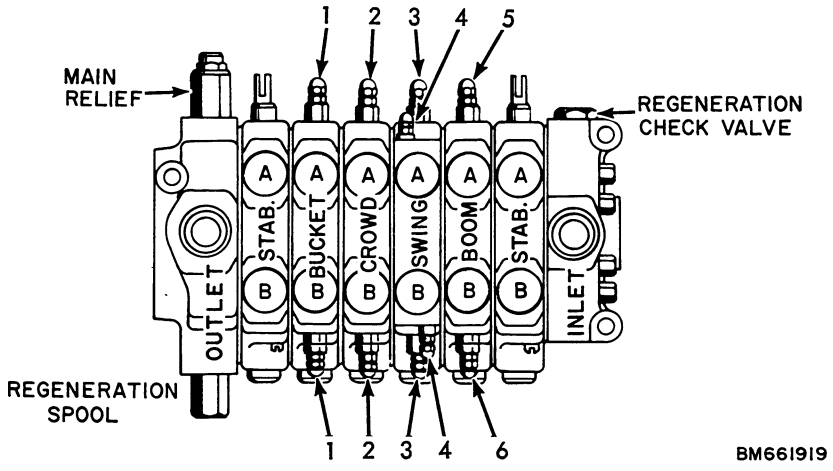

Checking Pressure With Control Valve On Tractor

Figure 3D-33 shows how the hand pump is installed for testing typical secondary relief valves. The hand pump must always be joined to the line from the port next to the relief valve being tested.

1. Install an accurate pressure gauge in the hand pump that will read up to 3000 P.S.I.

2. Warm up the hydraulic oil to normal operating temperature of approximately 125° F.

3. Have the buckets resting on the ground.

4. Actuate the control lever back and forth for each cylinder to be tested. This will equalize hydraulic pressure within the circuit.

5. Trace the hose from the port next to the relief valve being tested. Disconnect this hose at any convenient swivel fitting. Join this hose to the hand pump hose—typical connections are shown in Figure 3D-33. For relief valves in the swing circuit, see "Note" on page 3D-34.

6. Actuate the lever on the hand pump back and forth. If oil was lost from line when installing hand pump, it will be necessary to replace this oil by actuating the hand pump lever—the hand pump must be operated against a solid column of oil. Build up pressure against the relief valve until it bypasses. Make several checks as air in lines, etc. may give a false initial reading.

7. Compare the readings with "Hand Pump Specifications" on page 3D-33. Instructions for adjusting valve are on page 3D-38. If servicing or replacement is indicated see page 3D-50 or 3D-58.

NOTE

SWING HIGH PRESSURE RELIEF VALVES (WITH ACORN CAP)

a. Join the hand pump to the hose leading to the port being tested.

b. Install a plug in the opposite hose.

SWING CRISS-CROSS RELIEF VALVES

Although these relief valves can be tested by hand pump as described above, it is simpler to check them with a pressure gauge as described on page 3D-38.

BOOM DOWN RELIEF VALVE

This relief valve can be tested by hand pump as described above. However, it is simpler to check with a pressure gauge as described on page 3D-37.

SWING CUSHION RELIEF VALVES

a. Remove the valve cartridge and seat. The procedure is the same as described on page 3D-50.

b. Install and test in special fitting kit D12806. Use a 4000 P.S.I. pressure gauge. See page 3D-35.

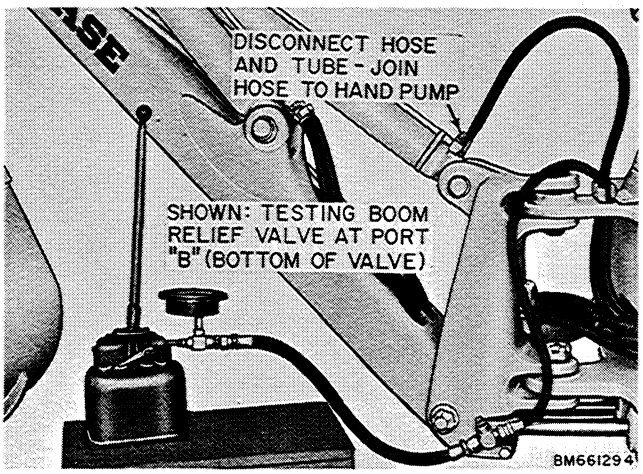

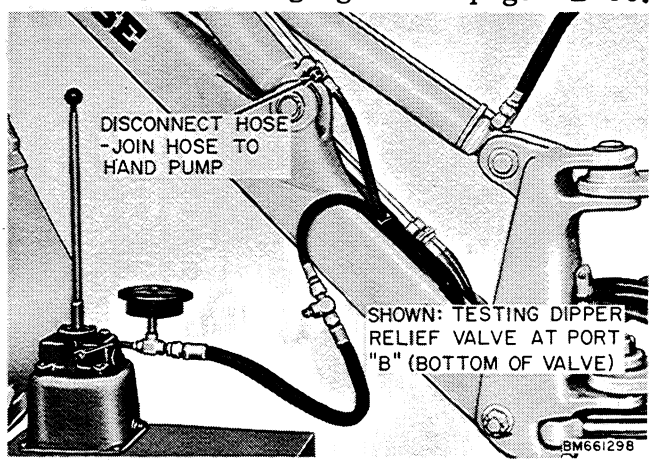

Figure 3D-33 - Checking Backhoe Secondary Relief Valves

Checking Pressure with Control Valve Removed from Tractor

When the control valve has been removed for servicing, the hand pump can be easily joined directly to the control valve ports.

1. Join the hand pump to the port adjacent to the valve being tested.

   To test swing criss-cross relief valves:

   a. Join the hand pump to the port OPPOSITE the side of the relief valve being tested. Test the top valve from the bottom port, and vice versa.

   b. Leave the opposite port open to provide an outlet for the hand pump oil.

   To test swing high pressure relief valves:

   a. Join the hand pump to the port on the same side as the relief valve being tested.

   b. Install a plug in the opposite port.

2. Actuate the lever on the hand pump, building up pressure until the valve "cracks" open or bypasses. Make several checks.

3. Compare the readings with specifications on page 3D-33. Adjust the valve as necessary, see page 3D-38. If repair or replacement is indicated, see page 3D-50 or 3D-58.

Quick Pressure Tests With Special Fitting Kit D12806

Refer to Figures 3D-34 and 3D-35

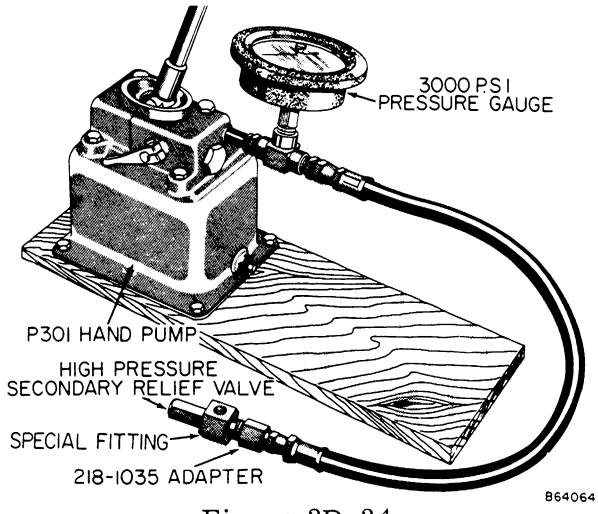

Figure 3D-34
Hand Pump with Special Fitting

A kit is available through Central Parts for checking Commercial Shearing secondary relief valves when removed from the control valve. This kit can be used to check Commercial-Shearing valves on any machine.

Some common uses of this kit include:

1. Checking replacement relief valves (Commercial-Shearing relief valves are not pre-set except when supplied as part of a complete new section or control valve).

2. Checking relief valves with the control valve left on its mounting. The relief valve and its seat are simply removed from the control valve and installed in the special fitting for the test.

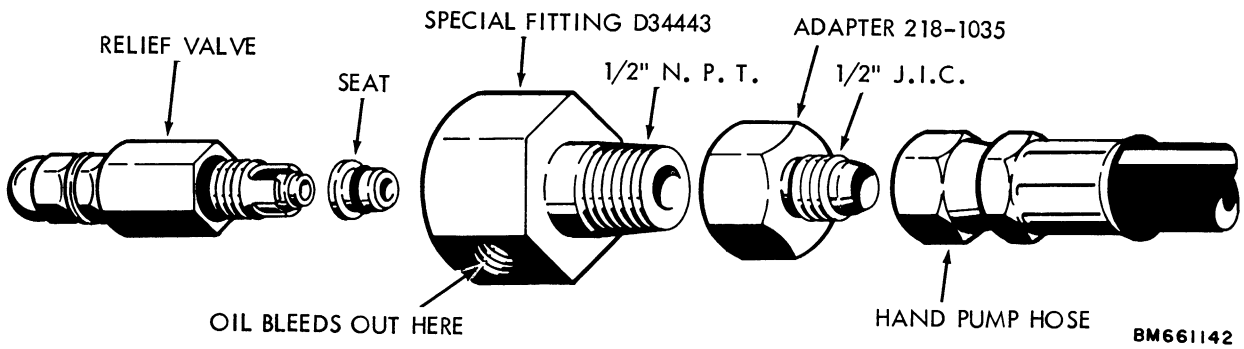

Figure 3D-35 - Special Fitting Kit D12806

3. Checking the setting of secondary relief valves when the control valve has been removed from the backhoe for servicing.

The kit consists of a specially designed fitting (D34443) which will accept both the relief valve cartridge and its seat, and an adapter (218-1035) to join to the hand pump hose.

CHECKING PROCEDURE

To check secondary relief valves, first remove the relief valve and its seat (page 3D-50). Plug the relief valve hole to prevent possible oil leakage or entry of dirt, then proceed as follows:

1. Install an accurate pressure gauge that will read up to 3000 P.S.I. in the hand pump.

2. Insert the relief valve seat in the special fitting D34443. Be sure the seat is not "cocked" in the fitting.

3. Screw the relief valve cartridge in the special fitting. Torque to 20 ft. lbs.– do not exceed this limit.

4. Connect the special fitting and adapter to the hand pump as shown.

5. Actuate the lever on the hand pump, building up pressure until the relief valve "cracks" open (bypasses). Make several checks as air in lines or other conditions may give a false initial reading.

6. If the reading is not as given in the specifications on page 3D-33, adjust the valve as necessary. If servicing is required, see page 3D-50 or 3D-58.

IMPORTANT

If a replacement backhoe relief valve or a repaired backhoe relief valve with a new poppet and seat is to be tested, first do this:

a. Tighten the adjustment screw all the way down.

b. Back it off. This will tend to mate the seat and poppet and prevent future leakage.

Adjusting Pressure Setting

1. Remove acorn cap nut and loosen jam nut.

2. Turn adjusting screw clockwise to increase pressure; counterclockwise to decrease pressure.

3. Again check pressure, then secure pressure setting with jam nut (without disturbing setting).

TESTING RELIEF VALVES WITH A PRESSURE GAUGE

Backhoe Main Relief Valve

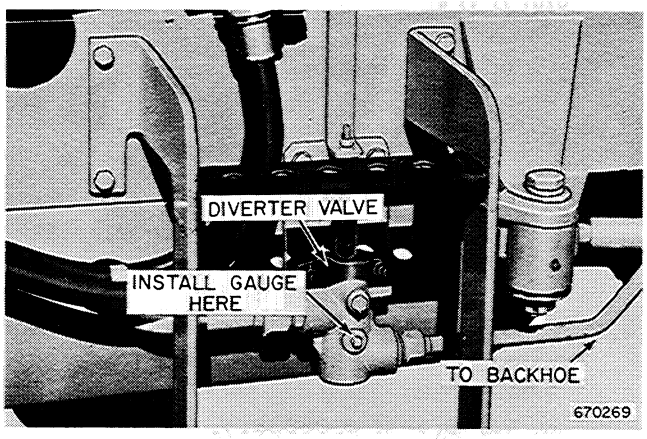

Figure 3D-36 - Pressure Gauge Location

The backhoe main relief valve is located in the outlet section of the backhoe control valve, Figure 3D-37. Test pressure setting as follows:

1. The backhoe hydraulic system contains a diverter valve, a convenient test point located on the tractor. The diverter valve contains a 1/4" square head plug—remove this plug and install a pressure gauge that will record up to 3000 P.S.I.

2. With the gauge installed at this point, the following pressure settings can be tested:

   a. Backhoe main relief valve.

   b. Backhoe boom down relief valve.

   c. Swing criss-cross relief valve.

   Refer to Figure 3D-37 for location of these relief valves.

3. Run the engine until the hydraulic oil is at operating temperature, approximately 120°F.

4. Run the engine at backhoe operating speeds. These are:

MODEL 33

W7 . . . . . 1600 R.P.M.
W9B and W10B . . . . . 1400 R.P.M.

MODEL 34

W9B and W10B . . . . . 1400 R.P.M.

Raise a stabilizer leg. With the leg completely raised, the oil will bypass the main relief valve. Keep the lever in power position until a steady gauge reading is obtained.

5. Pressure specifications are as follows: Model 34 - 1950 P.S.I., allowable range 1950-2000 P.S.I.

   Model 33 - 2200 P.S.I., allowable range 2125-2275 P.S.I.

   If the gauge reading is higher or lower, the main relief valve must be adjusted, page 3D-38.

Checking Low Pressure Valves with System Pressure

Secondary relief valves with settings LOWER than the main relief setting can be checked with a pressure gauge installed on the tractor.

BOOM DOWN RELIEF VALVE

This relief valve is located at the top port of the boom section.

1. Install a 2000 P.S.I. gauge as shown in Figure 3D-36.

2. Lower the loader bucket to ground level.

3. Lower stabilizers to normal digging position.

4. Fully extend the bucket and dipper arm. Lower the boom until the bucket touches ground directly behind the tractor at maximum reach.

5. Run the engine at 800 R.P.M. and apply down pressure to the boom until a steady gauge reading is obtained. The pressure should read 1150 to 1350 P.S.I. Adjust the relief valve if necessary.

SWING CRISS-CROSS RELIEF VALVES

These two relief valves are located at each port of the swing section.

1. Install a 2000 P.S.I. gauge at location shown in Figure 3D-36.

2. Swing criss-cross valves are tested in the port OPPOSITE the side on which the valve is located. Run the engine at 800 R.P.M.

   a. To test the valve at the top ("A") port, swing the boom all the way to the left.

   b. To test the valve at the lower ("B") port, swing the boom all the way to the right.

3. Hold the foot pedal down until a steady gauge reading is obtained. The pressure should read 1200 to 1400 P.S.I. Adjust the valve(s) if necessary.

ADJUSTING RELIEF VALVES

ADJUSTING MAIN RELIEF VALVE

1. Loosen the locknut, and turn the adjusting screw as follows:

TO INCREASE PRESSURE — turn adjusting screw clockwise (in);

TO DECREASE PRESSURE — turn adjusting screw counterclockwise (out).

2. When the correct pressure has been obtained, secure the setting with the locknut (without moving the adjusting screw).

3. Again check the pressure. If correct, remove the pressure gauge.

ACORN CAP STYLE VALVES

1. Remove acorn cap nut and loosen jam nut.

2. Turn adjusting screw clockwise to increase pressure; counterclockwise to decrease pressure.

3. Again check pressure, then secure pressure setting with jam nut (without disturbing setting).

SWING CRISS-CROSS VALVES
(MODEL 33)

1. Loosen the jam nut.

2. Turn adjusting screw (with an Allen wrench) clockwise to increase pressure; counterclockwise to decrease pressure.

3. Again check pressure, then secure setting with jam nut (without disturbing setting).

BACKHOE CONTROL VALVE

TROUBLE SHOOTING

MODELS 34 AND 33 BACKHOES

POSSIBLE CAUSES	REMEDY
Backhoe Operation Slow, Jerky, or Lacking Power	
1. Backhoe regeneration check valve not closing because of chips, etc.	1. Remove regeneration check valve cartridge - inspect check poppet and "O" ring.
2. Backhoe regeneration spool not closing.	2. Remove regeneration cap and check spring.
3. Hydraulic oil level too low.	3. Fill to proper level and check for leaks.
4. Incorrect main relief valve setting.	4. Check relief valve pressure.
5. Relief valve leaking internally.	5. Check seat, poppet, and "O"rings for cracks, pits, wear, etc.
6. Broken relief valve spring.	6. Replace spring and check pressure.
7. Relief valve action sluggish.	7. Thoroughly clean relief valve with solvent.
8. Defective secondary relief valve in circuit being actuated.	8. Check secondary relief valve with hand pump.
9. Oil leaking from system.	9. Check for external leaks.
10. Undetermined leakage.	10. Check backhoe hydraulic system with flowmeter.
11. Worn pump.	11. Check pump with flowmeter.
12. Inlet section cracked internally.	12. Remove and inspect section.
Control Lever Feathered - Cylinder Falls in Opposite Direction	
1. Check poppet not seated and sealing.	1. Check the poppet in valve section being actuated.
2. Lands in valve spool not properly aligning with valve body.	2. Check for equal spool travel in both directions. If unequal, section is improperly assembled.
Spools Bind	
1. Tie rods unevenly tightened or too tight.	1. Torque to 30 ft. lbs. evenly in increments of 5 ft. lbs.
2. Bent spool.	2. Replace spool and valve section.
Spools Do Not Return to Neutral	
1. Broken spool centering spring.	1. Replace spring.

POSSIBLE CAUSES	REMEDY

Cylinder Operates Incorrectly

1. Insufficient power.	1. Check relief valve pressures.
2. Defective cylinder.	2. Check cylinders.
3. Defective "O"rings on secondary relief valves.	3. Service relief valves.
4. Broken springs in secondary relief valves.	4. Replace springs in secondary relief valves.
5. Hoses connected to wrong ports.	5. Check Schematic Illustrations. Switch hoses.

Abrupt Stopping of Backhoe Swing

1. Defective secondary relief valves in swing section.	1. Check secondary relief valves.
2. Cylinder cushion mechanism defective.	2. Replace cushion mechanism parts.

Backhoe Boom Overswing

1. Secondary criss-cross relief valve setting too low.	1. Replace or adjust secondary relief valve.
2. Spool not returning to neutral position.	2. Check spool travel and linkage.
3. Secondary criss-cross relief valve held open.	3. Check relief valve for foreign matter.
4. Broken spring in swing secondary relief valve(s).	4. Replace spring.

Insufficient Boom Down Pressure

1. Secondary relief valve pressure setting too low.	1. Check relief valve pressure.
2. Defective cylinder packing.	2. Check cylinder packing.
3. Defective boom spool in control valve.	3. Replace boom section of control valve.

SPECIFICATIONS

(MODEL 34 AND 33 BACKHOES)

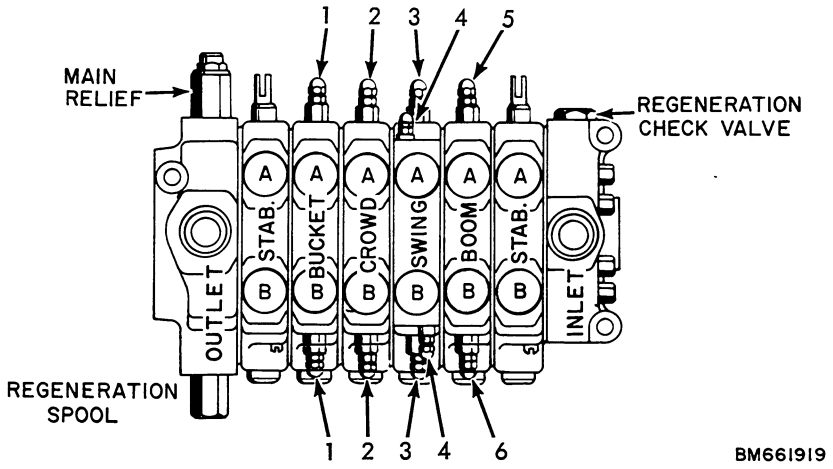

Figure 3D-37

Case Part No.

Model 34 Backhoe D38705

Model 33S Backhoe D37928

Manufacturer ..... Commercial-Shearing

Type ..... Open center, parallel circuits, 6 working sections with 2 work ports per spool, built-in regeneration for all spools.

Relief Valves

Main relief valve

Description ..... Cartridge type, screw adjustable, located in outlet section

Setting

Model 34 Backhoe ..... 1950 P.S.I., allowable range 1950-2000 P.S.I.

Model 33 Backhoe ..... 2200 P.S.I., allowable range 2150-2250 P.S.I.

Secondary relief valves

Description ..... Cartridge type, screw adjustable, located at all working ports except in the two stabilizer sections.

Settings - 1. At both ports in bucket section - 2750 P.S.I., range 2600-3000 P.S.I.

2. At both ports in dipper section - 2750 P.S.I., range 2600-3000 P.S.I.

3. At both ports in swing section - high pressure valves set at 2700 P.S.I. range 2600-3000 P.S.I.

4. At both ports in swing section - criss-cross valves set at 1300 P.S.I. range 1200-1400 P.S.I.

5. At top ("A") port in boom section - 1250 P.S.I., range 1150-1350 P.S.I.

6. At lower port ("B") in boom sections - 2750 P.S.I., range 2600-3000 P.S.I. Flow restrictor in port opening.

Check Valves ..... One in all six working sections

Ports and Spools

Spool Travel, Neutral to Pressure

Model 34 Backhoe ..... 15/32" in, 15/32" out

Model 33 Backhoe ..... 13/32" in, 13/32" out

Work Ports Pressurized
Spool Travel In ..... Work port nearest eye of spool ("A")
Spool Travel Out ..... Work port nearest spool cap ("B")

Port Sizes
Work Ports ..... 1-1/16" - 12 thread for 3/4" O.D. tube
Inlet and Outlet Ports ..... 1-5/16" - 12 thread for 1" O.D. tube

Control Lever Movements--Spool Travel

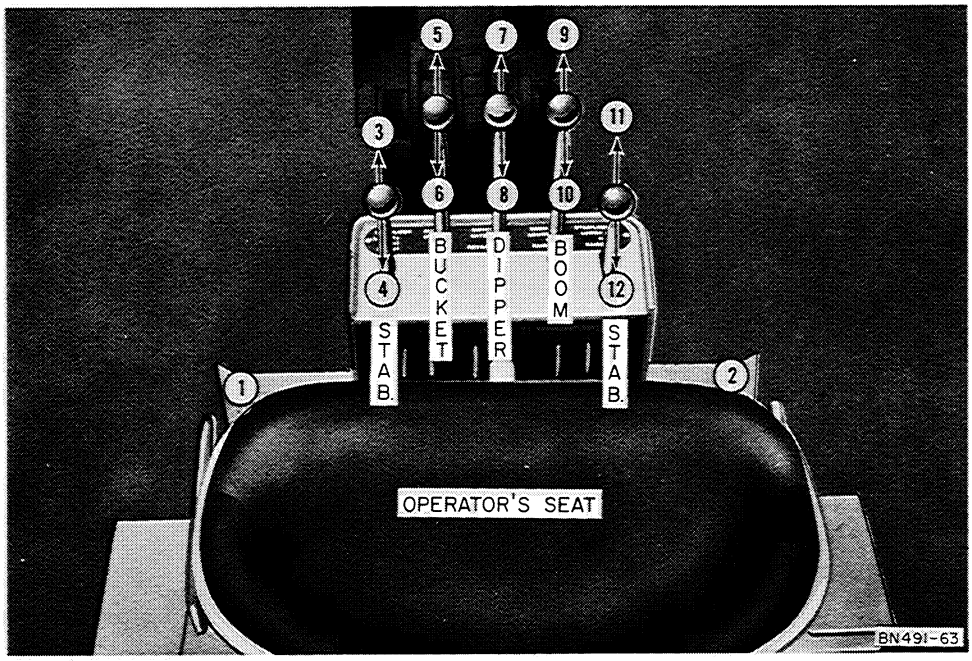

Figure 3D-38 - Operator's View of Backhoe Controls

POSITION	CONTROL MOTION	BACKHOE ACTION	SPOOL TRAVEL	PORT PRESSURE
	Terms "In" and "Out" refer to in or out of the valve body.			
	INDIVIDUAL CONTROL LEVERS WITH FOOT SWING			
1.	Push L.H. pedal down	Swing boom left	Out	"B"
2.	Push R.H. pedal down	Swing boom right	In	"A"
3.	Push lever forward	Lower L.H. stabilizer	In	"A"
4.	Pull lever backward	Raise L.H. stabilizer	Out	"B"
5.	Push lever forward	Dump bucket	In	"A"
6.	Pull lever backward	Fill bucket	Out	"B"
7.	Push lever forward	Extend dipper	In	"A"
8.	Pull lever backward	Retract dipper	Out	"B"
9.	Push lever forward	Lower boom	In	"A"
10.	Pull lever backward	Raise boom	Out	"B"
11.	Push lever forward	Lower R.H. stabilizer	In	"A"
12.	Pull lever backward	Raise R.H. stabilizer	Out	"B"

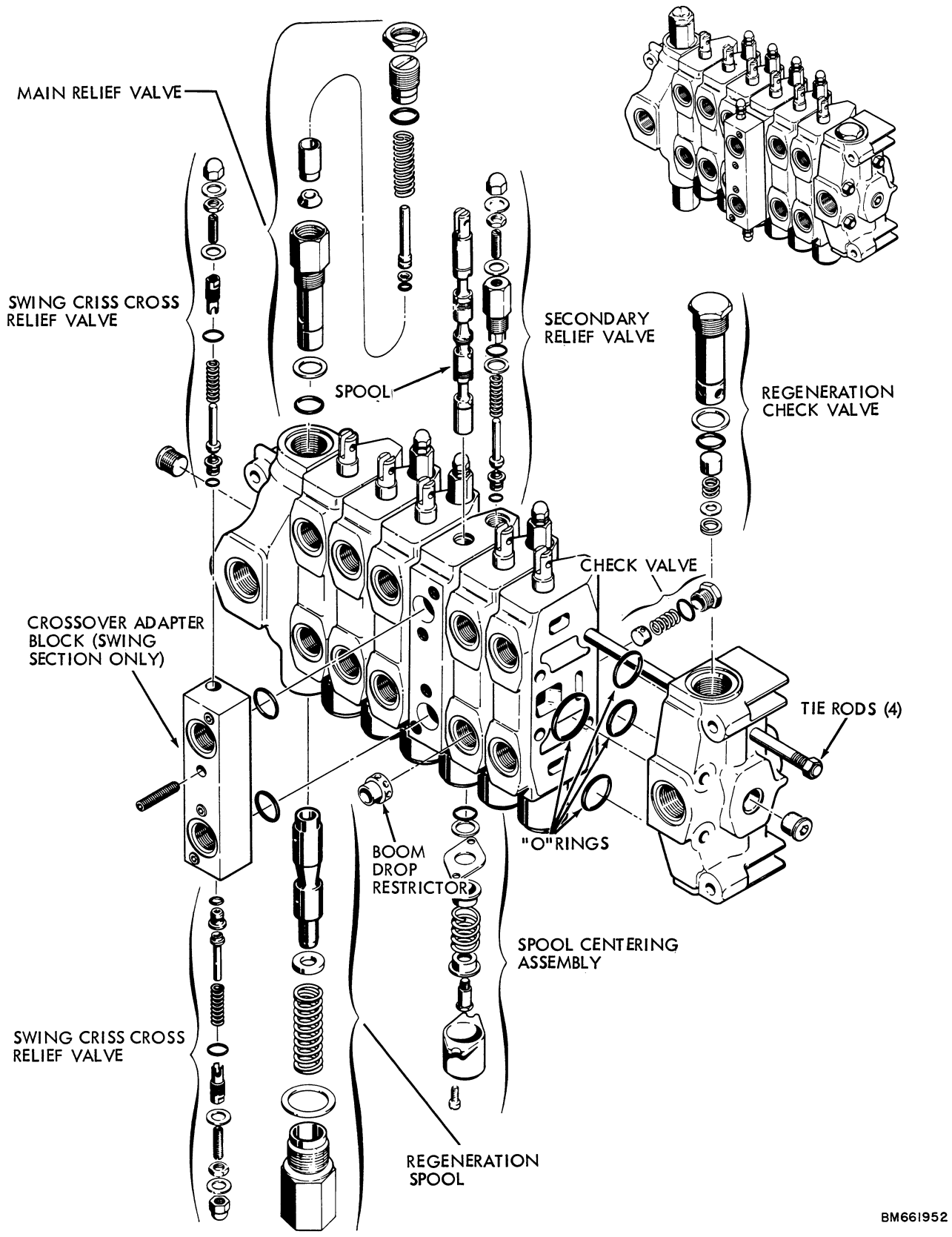

Figure 3D-39 - Exploded View of Backhoe Control Valve

Removing Control Valve

1. The backhoe must be removed from the tractor before the control valve can be removed. See page 3D-12.

2. Clean the valve exterior and all fittings to prevent entry of dirt into the hydraulic system.

3. Place suitable supports under the mounting frame, boom, and dipper. Move each control lever or pedal in both directions to equalize pressures.

4. Before removing the valve, tag and number the hoses, tubes, and sections, starting at the inlet end. Number the top port of the first section No. 1, the bottom port No. 2, the top port of the second section No. 3, etc.

5. Disconnect the tubes and hoses from the valve. Cap or plug all exposed openings immediately.

6. Disconnect the pressure and return hoses and tubes. Cap or plug exposed openings.

7. Remove the control rod pins from the valve spools.

8. Remove the three mounting capscrews. Use caution in handling the control valve, as it weighs over 100 lbs.

CAUTION!

Remember, dirt is the enemy of any hydraulic system. The best way to fight this enemy is to prevent its entry into the system. Make sure you disassemble and reassemble this valve in spotlessly clean surroundings.

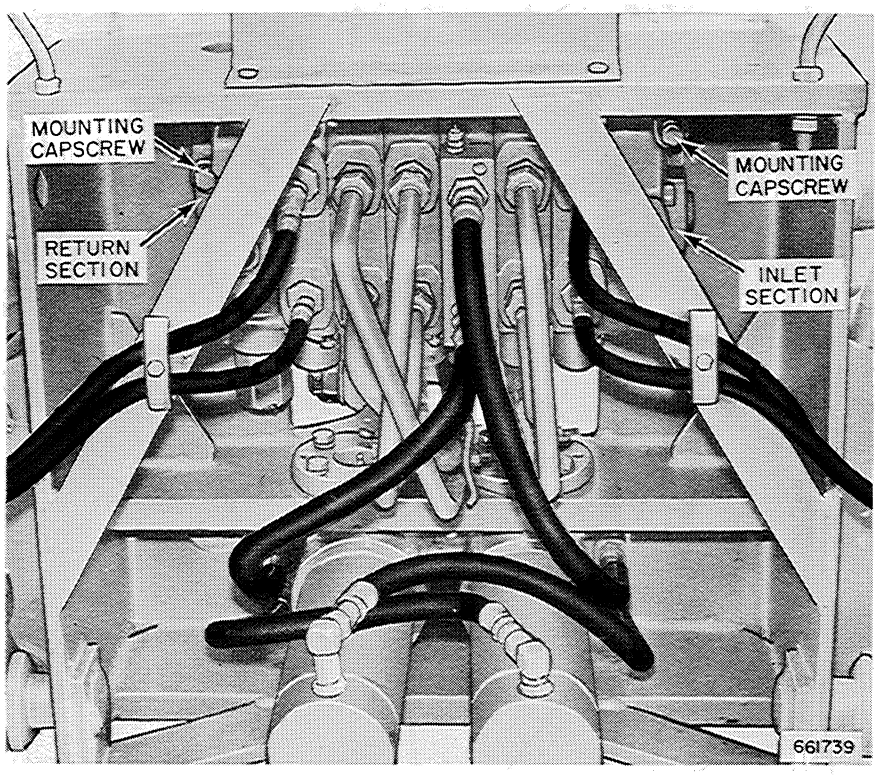

Figure 3D-40 - Removing Control Valve

Main Relief Valve

REMOVAL AND DISASSEMBLY

1. Refer to Figure 3D-42. Unscrew the main relief valve cartridge from the outlet section.

2. Loosen the jam nut and using a large screwdriver, remove the adjusting screw from the cartridge. Remove the spring from the cartridge.

3. Remove the floating seat assembly and snubber from cartridge. Remove the plunger from the floating seat. Remove "O"ring and backup ring from plunger.

4. The remainder of the parts in the cartridge—poppet, retaining ring, "O" ring, and backup ring—cannot be removed due to the crimped end of the cartridge.

INSPECTION

1. Discard the "O"rings—replace with new parts when assembling.

2. Carefully clean the remaining parts and inspect for wear, damage, pitting, etc. Replace as required.

3. Be sure the small hole in the snubber is open.

4. If any of the parts in the poppet end of the cartridge must be replaced, order kit D39700 which contains a factory-assembled cartridge and poppet end parts—poppet, retaining ring, "O"ring and backup ring.

ASSEMBLY

1. Install new "O"ring and backup ring on plunger—backup ring is toward the stem of the plunger. Lubricate plunger and install in floating seat. Install snubber in the cartridge followed by the floating seat assembly.

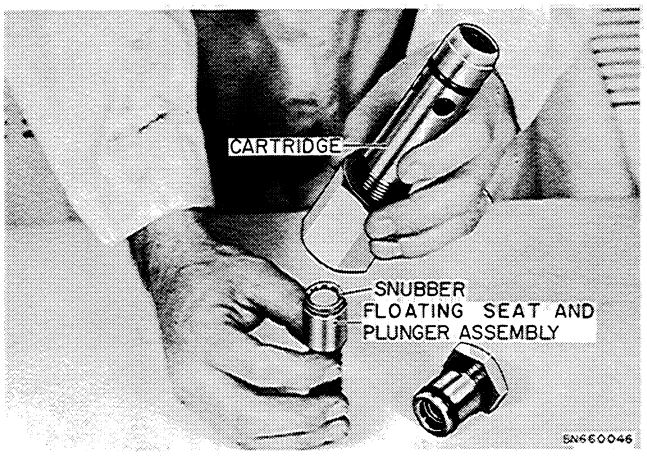

Figure 3D-41 - Installing Plunger

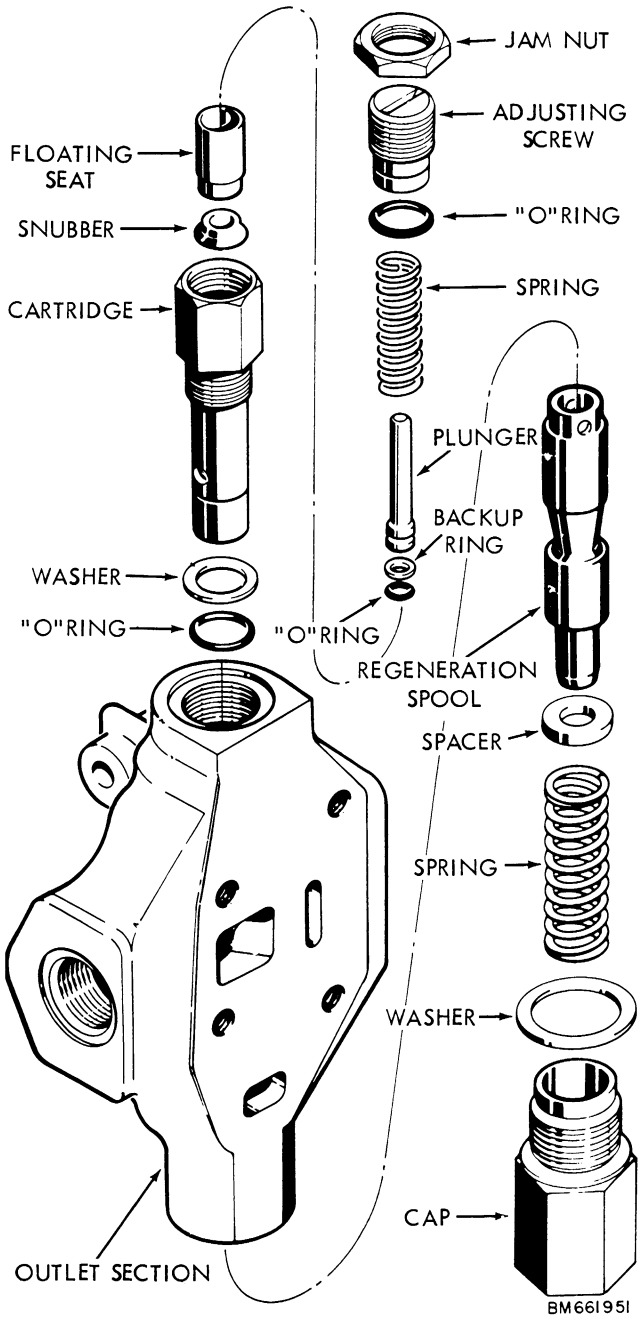

Figure 3D-42 - Outlet Section

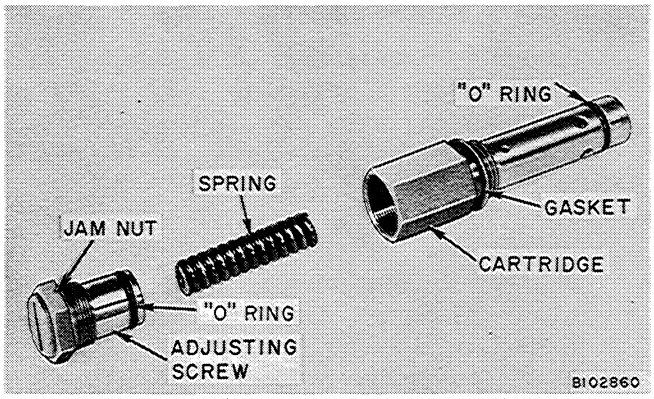

Figure 3D-43 - Installing Spring

2. Install the main relief valve spring in the cartridge. Install a new "O"ring on the adjusting screw. Place adjusting screw and jam nut in cartridge and screw down two or three turns. PRESSURE ADJUSTMENT MUST BE MADE ONLY AFTER CONTROL VALVE HAS BEEN REINSTALLED ON TRACTOR. Install washer on cartridge. Insert the assembled cartridge into the control valve and tighten.

Regeneration Spool

Refer to Figure 3D-42. The regeneration spool is a simple device that should seldom require servicing. If required, it is easily disassembled.

1. Remove the large cap and washer from the outlet section.

2. Remove the spring and spacer. Inspect the spring for damage—replace if necessary.

3. Pull out the spool and inspect carefully for wear and scoring.

4. Reassembly is the reverse of steps 1 to 3.

Regeneration Check Valve

DISASSEMBLY

1. Unscrew the cartridge from the top of the inlet section.

2. Using a pocket knife or similar tool, remove the spiral snap ring from the end of the cartridge.

(Text Continued on Page 3D-49)

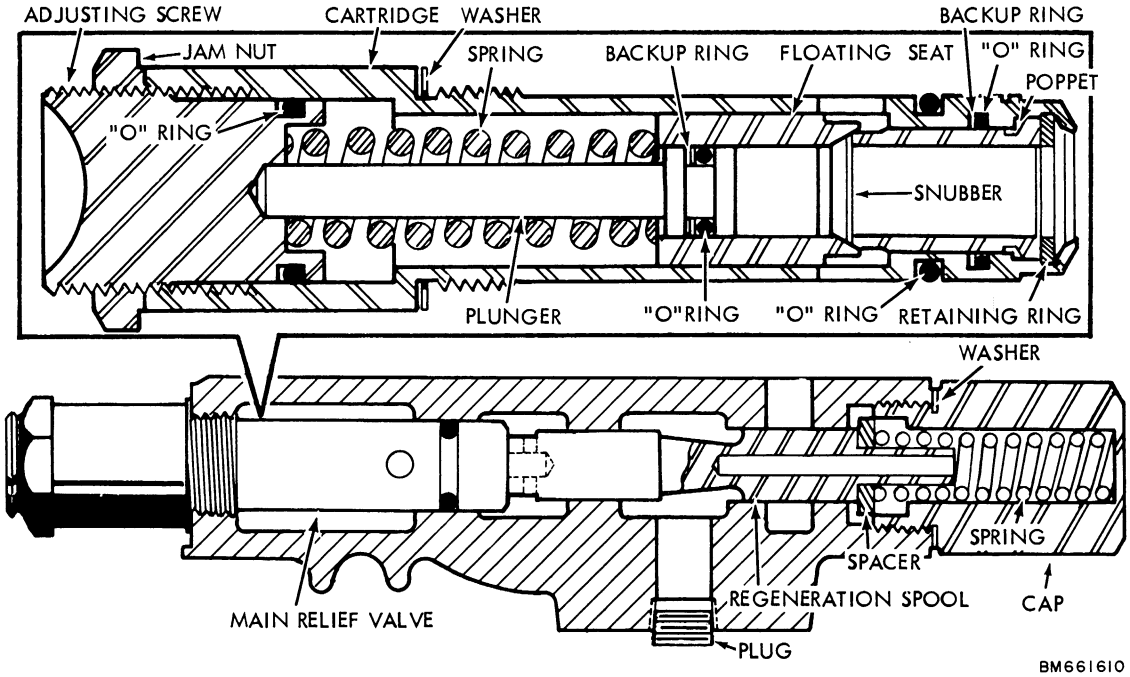

Figure 3D-44 - Outlet Section and Main Relief Valve

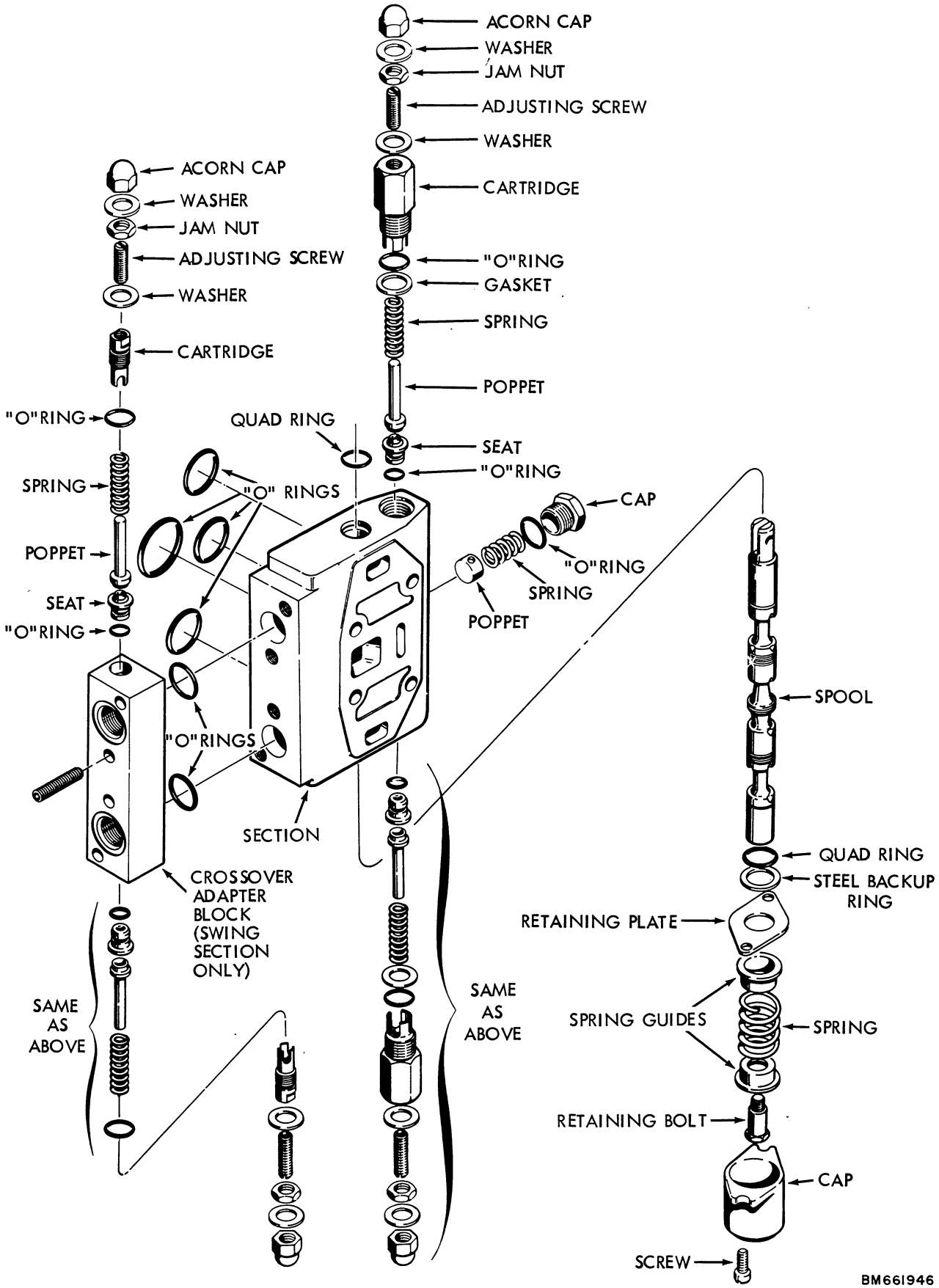

Figure 3D-45 - Exploded View of Typical Valve Section

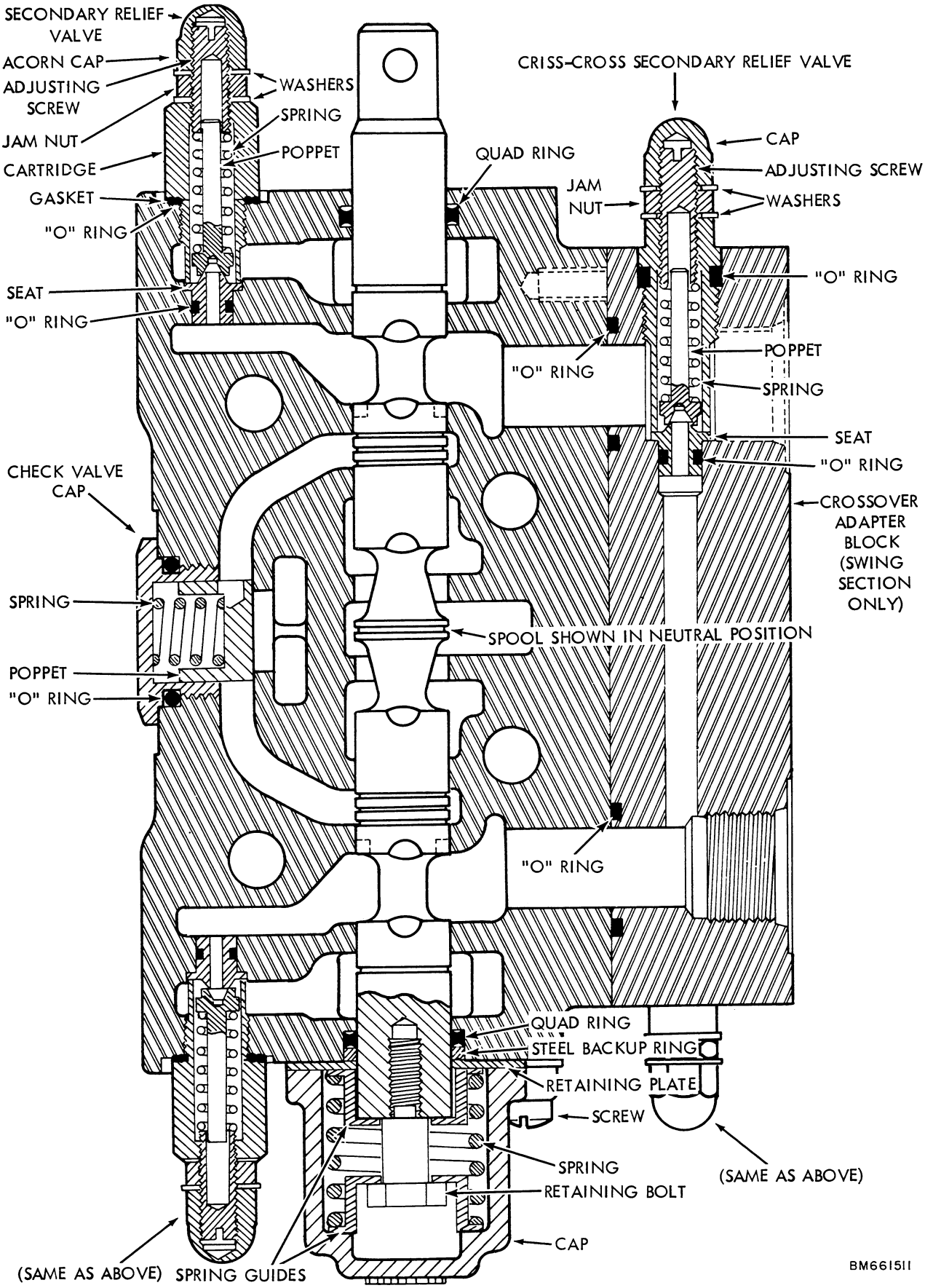

Figure 3D-46 - Cross Section of Typical Valve Section

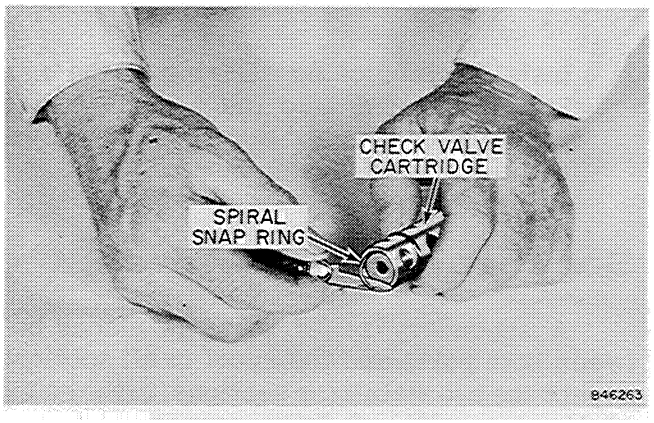

Figure 3D-47 - Removing Spiral Snap Ring

3. Remove the spring retainer, spring, and poppet from the cartridge. Examine the poppet and poppet seat for damage and wear.

INSTALLATION

1. Lubricate the poppet with light oil and reinstall the poppet, spring, and spring retainer. Insert a tool through the hole in the cartridge to hold the poppet, spring, and spring retainer in place while installing the snap ring.

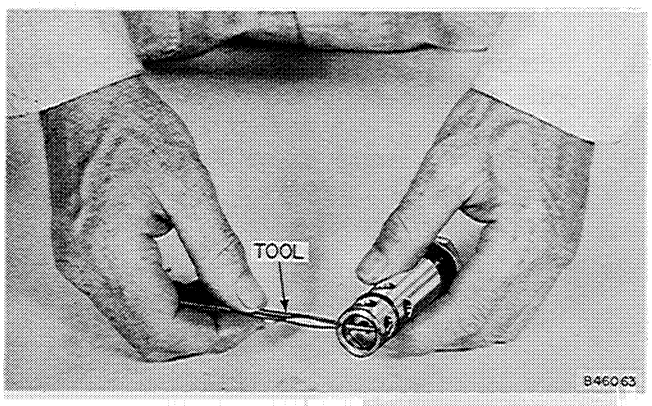

Figure 3D-48 - Installing Spiral Snap Ring

2. Install the gasket and a new "O"ring on the cartridge and insert the cartridge into the control valve and tighten.

Valve Sections and Spools

DISASSEMBLING THE VALVE

1. Starting at the inlet end, number all the sections in order to insure reassembly in their original position.

2. Loosen the four tie rods at the inlet end—these tie rods extend clear through the valve and screw into the outlet section. Slide sections off the tie rods as required.

3. Remove the four "O"rings from the face of each section.

REMOVING SPOOLS

Refer to Figures 3D-45 and 3D-46. Spools in the six work sections are identical in design. However, in no case should spools be intermixed. Spools are a selective fit with their section and must always be reassembled in their original section.

1. Remove the cap from bottom of section. Remove the spool retaining bolt. This bolt is factory-installed with Loctite on its threads.

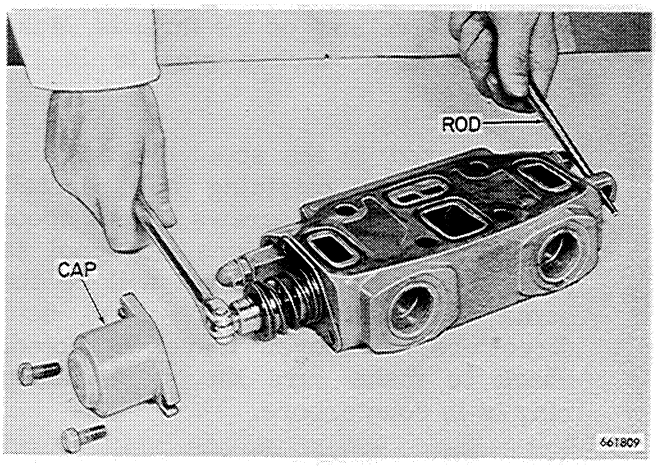

Figure 3D-49
Removing Spool Retaining Bolt

2. Remove the two spring guides, spring, and retaining plate. Remove the steel backup ring and quad ring from the valve housing.

3. From the bottom of the section, slide the spool from the bore. Form a small

hook on the end of a paper clip and carefully remove the quad ring from the groove at top of the section.

4. Inspect all parts and the spool for wear and damage. Replace the quad rings. If the spool is to be replaced, a complete new section must be ordered.

INSTALLING SPOOLS

1. Lubricate a new quad ring with hydraulic oil and install in groove at top of section. Lubricate the spool, then carefully slide spool up from bottom of section. When the spool contacts the quad ring, twist the spool slightly and push the spool until the end of the spool is even with the bottom of the section.

2. Lubricate a new quad ring and install in the counterbore in bottom of the section.

3. Install the steel backup ring and retaining plate. Expose enough of the spool so the two spring guides and spring can be assembled on the spool. Secure this assembly to the spool with the retaining bolt, using Loctite Sealant B7-2 (yellow) on the threads. Make sure the steel backup ring is in the counterbore.

4. Place a rod in the spool eye and securely tighten retaining bolt. Install the cap and tighten screws. Check spool travel in both directions. If spool is properly assembled, travel will be the same distance (15/32") in both directions. If uneven travel is noted, check to make sure the steel backup ring is in counterbore.

Check Valves

Refer to Figure 3D-46. A load check valve is placed in each of the six working sections opposite the cylinder ports.

1. To disassemble, remove the cap and "O" ring. Remove the poppet and poppet spring and examine for damage and wear. Replace the "O"ring and other parts as necessary.

2. Install a lubricated "O"ring on the cap. Slip the spring into the poppet—install poppet with attached spring in the valve. Install cap and tighten securely.

Secondary Relief Valves

A secondary relief valve is placed between both ports and the spool in all sections except the two stabilizer sections. In the swing section, a pair of inter-connected criss-cross relief valves is housed in the cross-over adapter block which is bolted to the valve.

If a secondary relief valve is removed with the control valve still mounted to the backhoe, plug the relief valve hole to prevent possible oil drainage.

When the control valve is removed for servicing, all secondary relief valves can be easily checked for proper pressure setting. See page 3D-35.

DISASSEMBLY

1. Remove the valve cartridge from section. Pull out the poppet and spring. Remove the "O"ring and gasket from the cartridge. To remove the adjusting screw, first remove the acorn cap and copper washer, then loosen the jam nut.

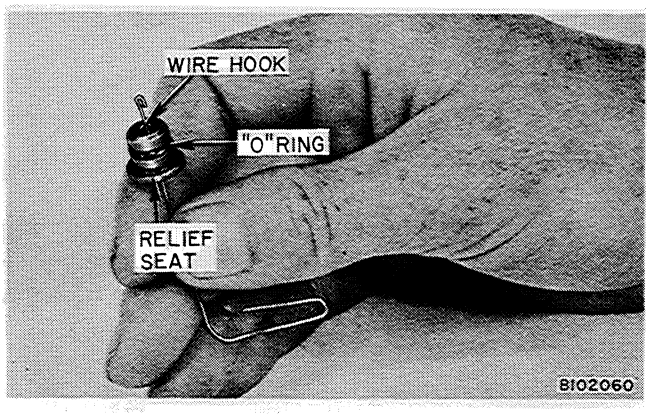

Figure 3D-50 - Valve Seat Removed

2. The valve seat can be removed with a wire hook. It is held in place by the fit of the "O"ring in the bore. Fig. 3D-46.

3. Clean and inspect all parts. Replace parts as necessary. If the poppet or seat must be replaced, replace both parts—a kit is available for making this replacement. Refer to the Case Parts Catalog.

ASSEMBLY

1. Install a well-lubricated "O"ring on the seat.

2. Fill the end of a tool (1/8" pipe nipple) full of heavy grease and place seat in tool. Install seat in valve section. Seat must be installed square with bore to prevent damage to "O"ring.

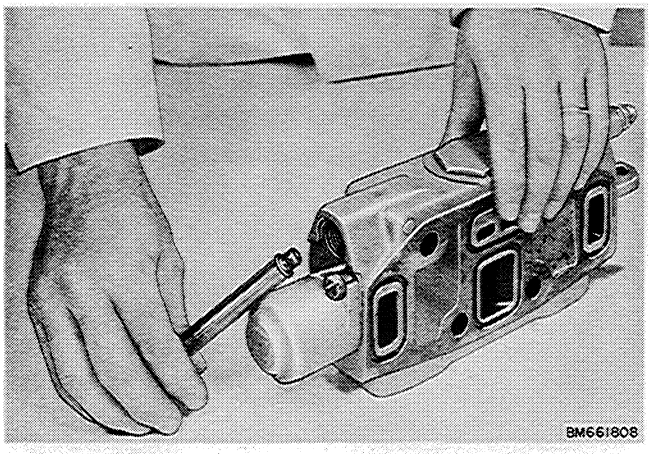

Figure 3D-51 - Installing Relief Valve Seat

3. Install poppet and spring in cartridge. install copper gasket and "O"ring on cartridge. Screw the cartridge into the valve section and torque to 20 ft. lbs.

4. If the relief valve now contains a new seat and poppet, do this:

   a. Tighten the adjusting screw all the way down, then back it off. This will tend to mate the seat and poppet and prevent future leakage.

5. The pressure setting will have to be adjusted before the backhoe is operated. See page 3D-35.

6. Secure the setting of the adjusting screw with a washer, jam nut, washer, and acorn cap.

Assembling Valve Sections



Figure 3D-52
Smoothing Valve Section Face

1. Using a flat, smooth, fine oil stone in a rotating motion, remove nicks and burrs from the face of the section(s). If there are high spots, they can be detected by using the stone. Keep stone flat at all times.

2. Carefully clean "O"ring grooves on face of section. Lubricate new "O"rings well and install in grooves.

3. Assemble the valve sections on a clean, flat surface. Slip the tie rods through the inlet section. Install lubricated "O" rings in inlet section grooves. Slip tie rods through the right hand stabilizer section, previously tagged No. 1. Check the "O"rings to see that they are in place.

4. Using the same procedure, assemble the remaining sections. Be sure sections are kept together to prevent the "O" rings from falling out. If the tie rods are tightened with one or more "O" rings out of its groove, the valve will leak.

IMPORTANT

5. The tie rods screw into the outlet section. Screw them finger tight, then torque to 30 ft. lbs. evenly in increments of 5 ft. lbs. The torque is very important. If too high, there may be spool bind; if too low, the "O"rings may extrude and cause the valve to leak.

6. Install the boom drop restrictor in the bottom port of the boom section. Install the restrictor with large diameter toward valve spool.

7. Before the control valve is reinstalled on the tractor, the setting of the secondary relief valves can be checked and adjusted by either of two methods:

   a. Using special fitting D12806. See page 3D-35.

   b. Connecting a hand pump directly to the control valve port. See page 3D-35.

NOTE

Relief valves which have been replaced as part of a complete valve section are pre-set. Relief valves which have been replaced individually or repaired must be adjusted to their specified setting.

8. Mount the control valve on the mounting frame with three capscrews and lockwashers. Shim between the valve and mounting frame to eliminate the possibility of distorting the valve.

9. Install the connectors, hoses, and tubes on the valve. Make sure they are in their original position.

10. Install the backhoe on the tractor. See page 3D-13.

11. Check and adjust the main relief valve pressure setting. Page 3D-37.

12. Actuate the control levers—the backhoe should operate as shown in Figure 3D-38. If not, hoses have been switched.

SERVICING MODEL 33 BACKHOE CONTROL VALVE

Specifications

See page 3D-41.

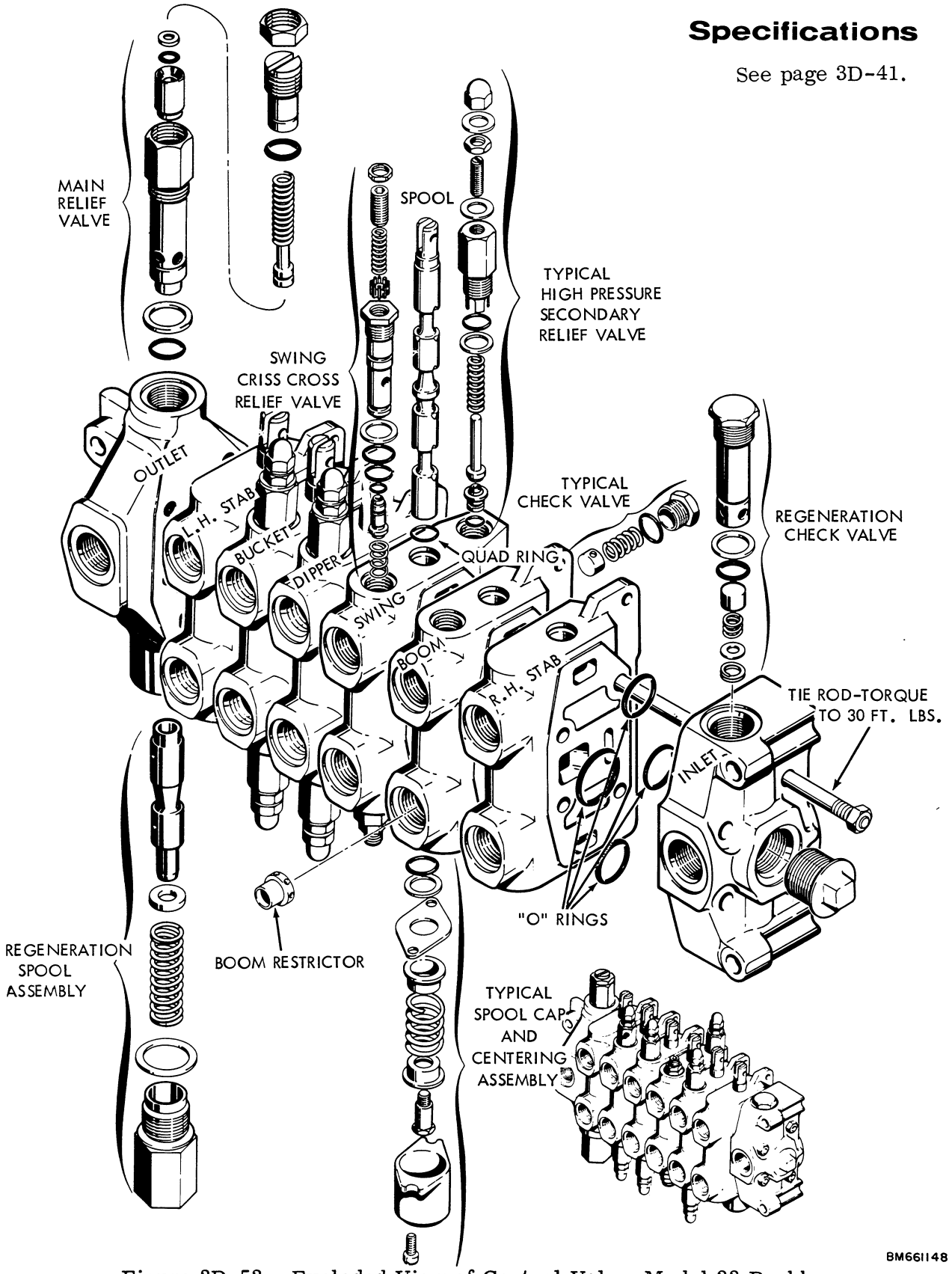

Figure 3D-53 - Exploded View of Control Valve, Model 33 Backhoe

Removing Control Valve

1. The backhoe must be removed from the tractor before the control valve can be removed. See page 3D-12.

2. Clean the valve exterior and all fittings to prevent entry of dirt into the hydraulic system.

3. Place suitable supports under the mounting frame, boom, and dipper. Move each control lever or pedal in both directions to equalize pressures.

4. Before removing the valve, tag and number the hoses, tubes and sections, starting at the inlet end. Number the top port of the first section No. 1, the bottom port No. 2, the top port of the second section No. 3, etc.

5. Disconnect the tubes and hoses from the valve. Cap or plug all exposed openings immediately.

6. Disconnect the pressure and return hoses and tubes. Cap or plug exposed openings.

7. Remove the control rod pins from the valve spools.

8. Remove the three mounting cap screws. Use caution in handling the control valve, as it weighs over 100 lbs.

CAUTION!

Remember, dirt is the enemy of any hydraulic system. The best way to fight this enemy is to prevent its entry into the system. Make sure you disassemble and reassemble this valve in spotlessly clean surroundings.

Main Relief Valve

REMOVAL AND DISASSEMBLY

1. Remove the main relief valve from the outlet section.

2. Loosen jam nut and using a large screwdriver, remove the adjusting screw from the cartridge. Inspect "O"rings for extrusion, nicks, etc.

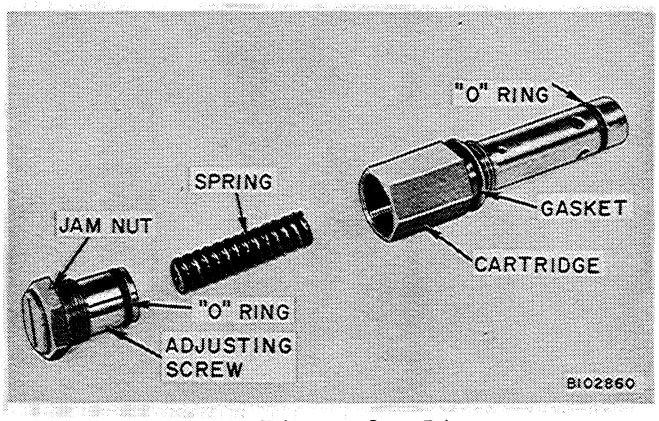

Figure 3D-54
Disassembling Main Relief Valve

3. Slip floating seat assembly from cartridge. Pull plunger and spring from floating seat. The plunger has an "O" ring and a backup ring. Inspect "O" ring for nicks, extrusion, etc. Inspect backup ring for damage.

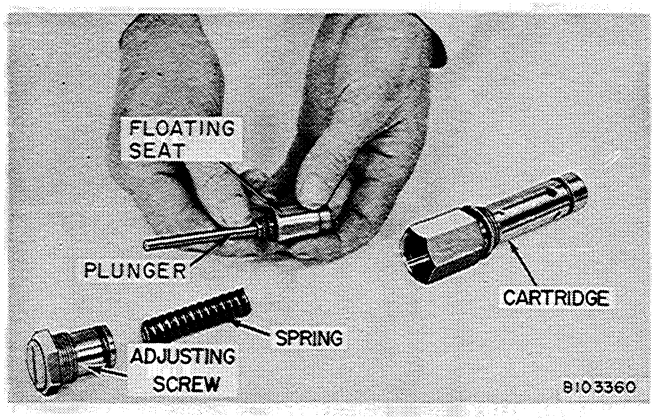

Figure 3D-55 - Floating Seat and Plunger

4. The remainder of the parts in the cartridge—poppet, retaining ring, "O" ring—cannot be removed due to the crimped end of the cartridge. These parts are available in kit form—refer to the Case Parts Catalog.

INSTALLING MAIN RELIEF VALVE

1. If original "O"ring or backup ring was found to be damaged, replace with new parts, lubricate with light oil and install. Push well lubricated plunger into floating seat. Install well lubricated assembly into bore of relief valve cartridge.

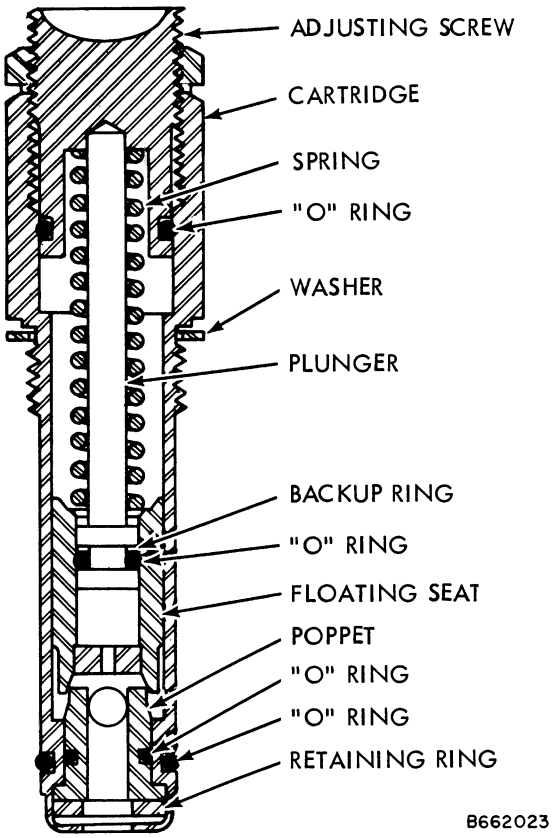

Figure 3D-56
Cross Section of Main Relief Valve

2. Install main relief valve spring in cartridge. Replace adjusting screw "O" ring if original was found to be damaged. Replace adjusting screw and screw down two turns. FINAL ADJUSTMENT MUST BE MADE AFTER VALVE HAS BEEN REINSTALLED ON TRACTOR. Insert the cartridge into the control valve.

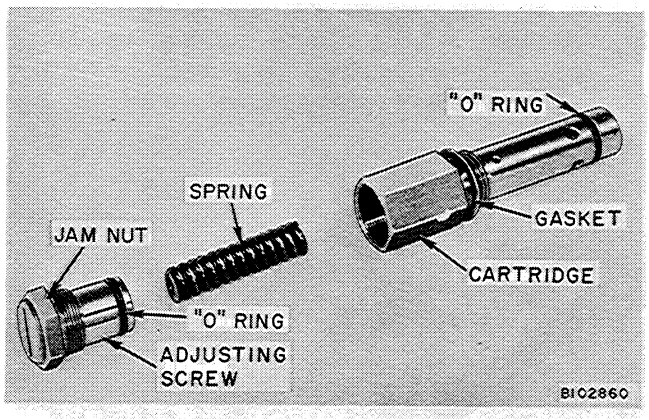

Figure 3D-57
Installing Spring and Adjusting Screw

Regeneration Check Valve

1. Remove the regeneration check valve from the inlet section of the control valve.

2. Using a small screw driver or similar tool, remove the spiral snap ring from end of check valve cartridge.

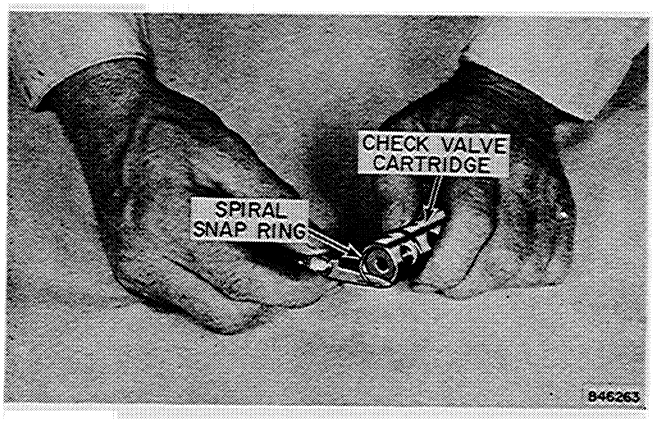

Figure 3D-58 - Removing Snap Ring

3. Remove the spring retainer, spring, and poppet from the check valve cartridge. Examine poppet and poppet seat for chips or score marks.

INSTALLING REGENERATION CHECK VALVE

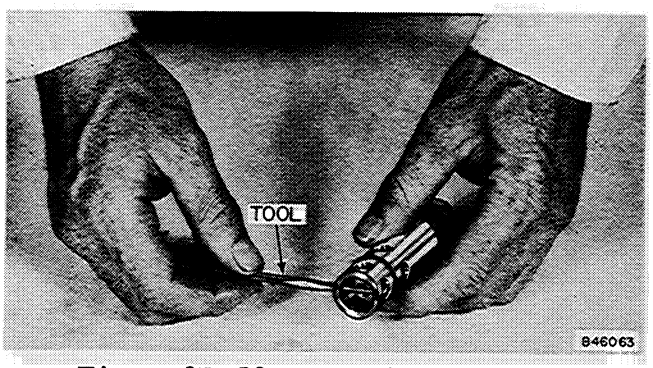

Figure 3D-59 - Installing Snap Ring

1. Lubricate the poppet with light oil, and reinstall the poppet, spring and spring retainer. Insert the tool through the hole in the check valve to hold the poppet, spring, and spring retainer in place while installing the spiral snap ring.

2. Inspect the "O"ring and gasket on the

cartridge, and insert the cartridge in the control valve.

Valve Sections and Spools

DISASSEMBLING THE VALVE

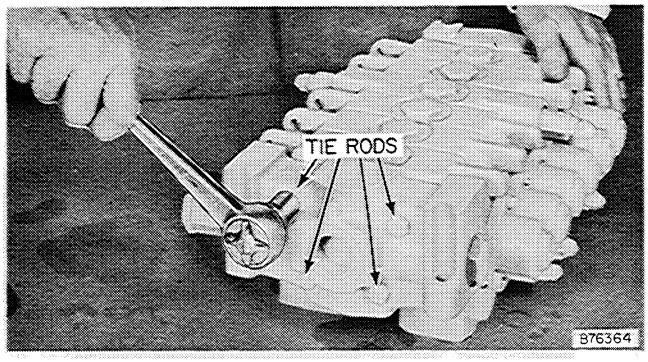

Figure 3D-60 - Removing Tie Rods

1. Loosen the four tie rods at the inlet end—DO NOT PULL FROM SECTIONS.

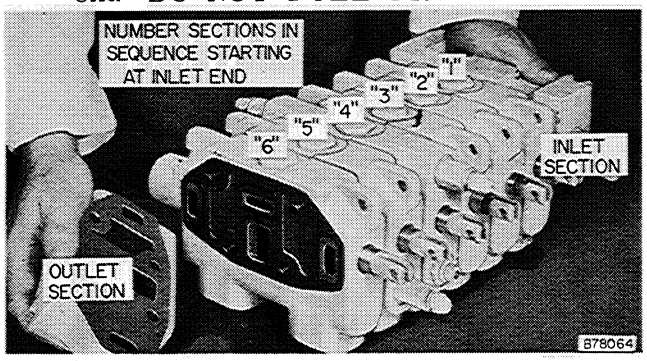

Figure 3D-61 - Numbering Valve Sections

2. Starting at the inlet end, number all the sections in order to insure reassembly in exact, original position. Then slide sections off the tie rods as required.

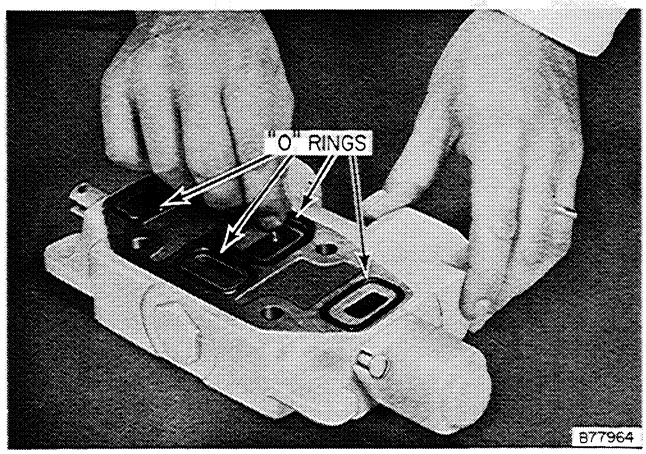

Figure 3D-62 - Removing "O" Ring from Sect.

3. Remove "O" rings (four) from each section and examine for nicks, extrusion, etc.

DISASSEMBLING SPOOL

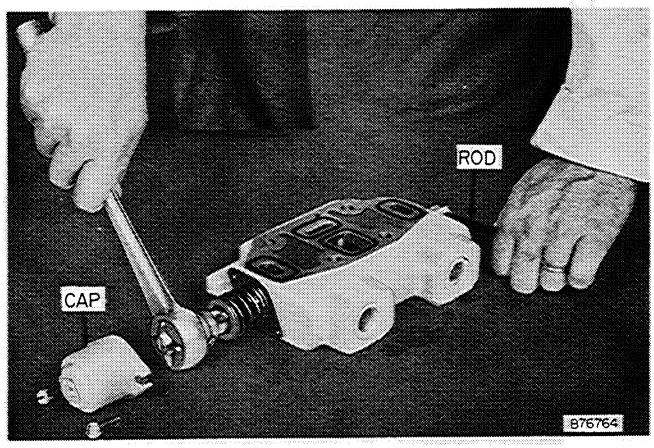

Figure 3D-63 - Removing Spool Retaining Bolt

1. Remove bottom cap and spool retaining bolt, holding spool with 1/4 inch rod.

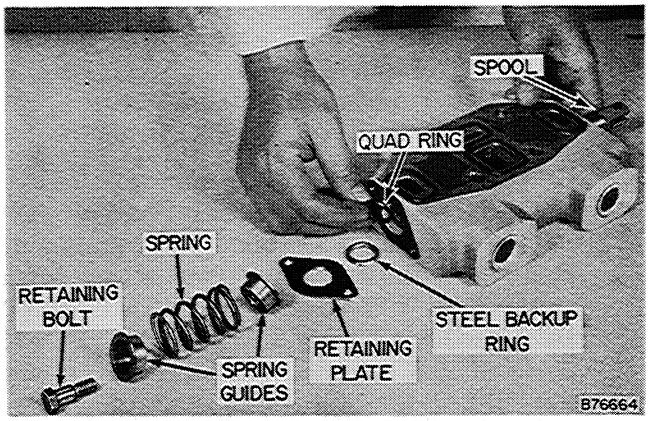

Figure 3D-64 - Removing Spool Center Parts

2. Remove spring guides, spring, retaining plate, steel backup ring and quad ring.

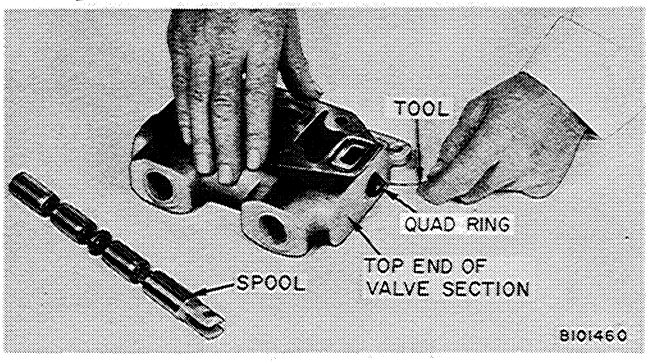

Figure 3D-65 - Removing Top Quad Ring

3. From bottom of valve, slide spool from bore. Form a small hook on the end of a paper clip and carefully remove ring from groove at the top of valve.

4. Inspect all parts for wear or score marks. If quad rings have nicks, flat spots, etc., replace with new.

ASSEMBLING SPOOL

The spools are a selective fit and always must be returned to their original sections.

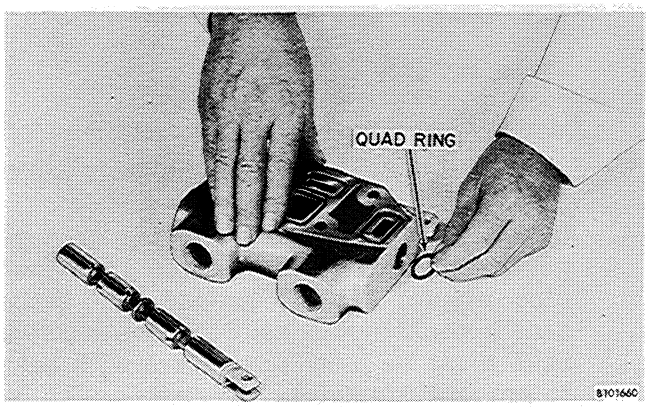

Figure 3D-66 - Installing Spool Quad Ring

1. Lubricate quad ring with light oil and install in groove. Lubricate spool, then carefully slide valve spool up from bottom of section. When spool contacts the quad ring, use a slight twisting motion and push spool up until end of spool is even with bottom of section.

2. Lubricate quad ring and install in counterbore. Then install steel backup ring, retaining plate, spring with spring guides, and retaining bolt. When installing retaining bolt, use Loctite Sealant B7-2 (yellow) on threads. Make sure the steel backup ring is counterbore.

3. Place rod in spool eye and securely tighten retaining bolt. Install cap and securely tighten screws. Check spool travel in both directions. If spool is properly assembled, travel will be the same distance in both directions. If uneven travel is noted, check to make sure steel backup ring is in counterbore.

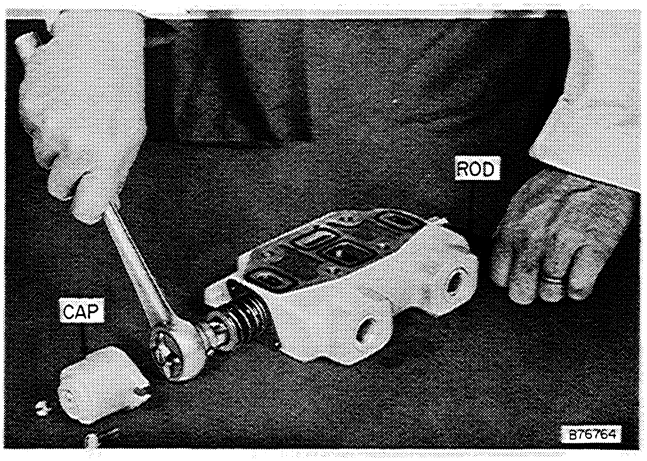

Figure 3D-68 - Tighten Spool Center Parts

Check Valves

1. Remove cap, then inspect "O" ring for nicks, extrusion, etc. Examine poppet and poppet spring for chips or score marks.

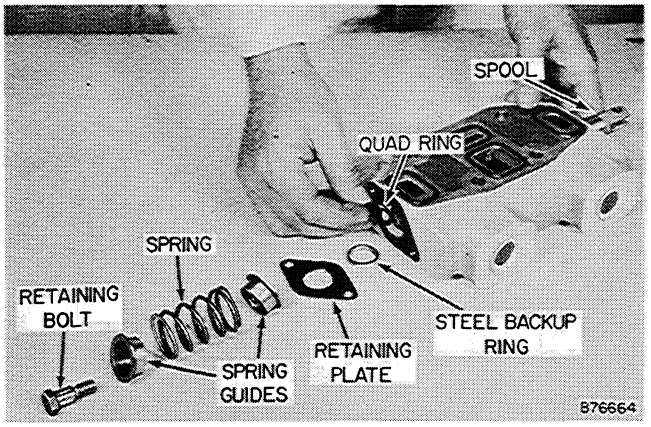

Figure 3D-67 - Installing Spool Center Parts

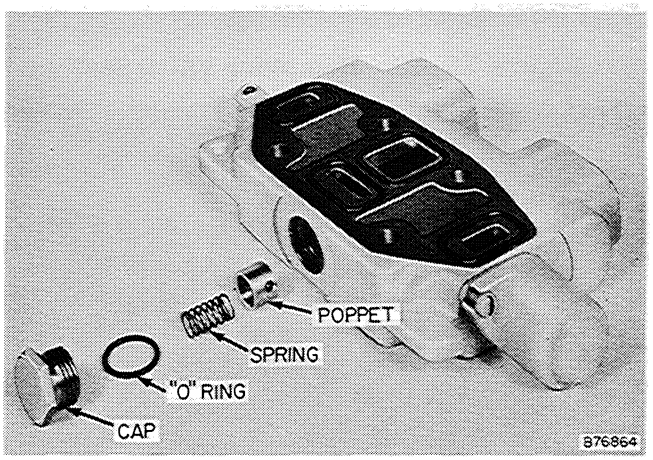

Figure 3D-69 - Check Valve

2. Install well lubricated "O"ring on cap and slip spring into poppet. Install poppet (with attached spring) in valve; then install cap and tighten securely.

Secondary Relief Valves

ALL ACORN CAP STYLE RELIEF VALVES

Secondary relief valves are placed in the bucket, crowd, boom, and swing sections. If accessible, they can be serviced without removing the control valve. If this is done, plug the relief valve hole after removal to prevent loss of oil.

1. Remove valve cartridge from section. Remove poppet and spring from cartridge. Remove acorn cap, 2 copper gaskets, and jam nut.

2. Relief valve seat is easily removed with wire hook and is held in place by fit of the "O"ring.

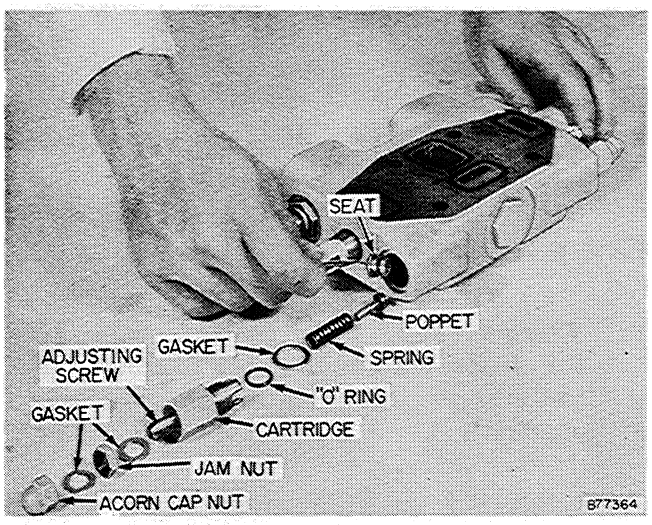

Figure 3D-70 - Removing Valve Seat

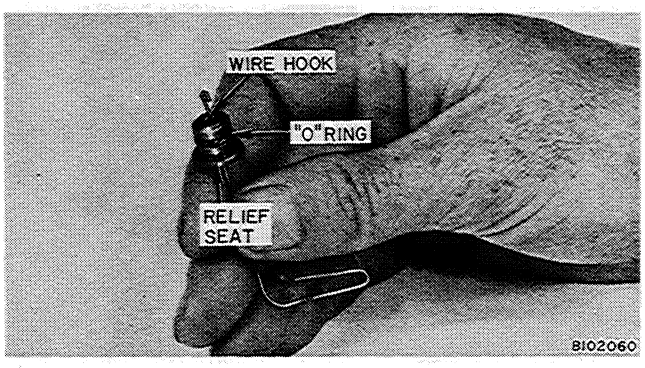

Figure 3D-71 - Valve Seat Removed

3. Clean and inspect all parts. Replace parts as necessary. If the poppet or seat must be replaced, replace both parts—a kit is available for making this replacement. Refer to the Case Parts Catalog.

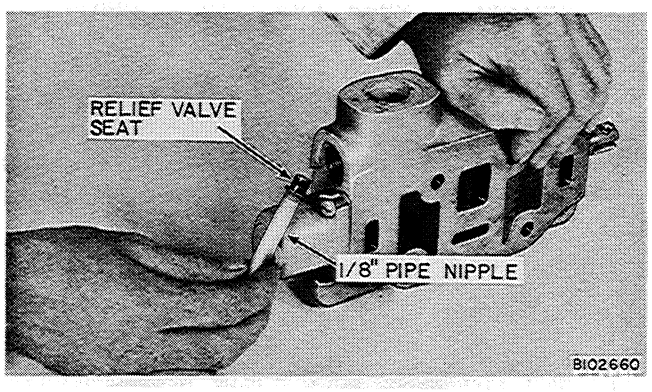

Figure 3D-72 - Installing Relief Valve Seat

4. Install well lubricated "O"ring on poppet seat. Fill end of a tool (1/8 inch pipe nipple) full of grease and place seat in tool. Install seat in valve section. Seat must be installed square with bore to prevent damage to "O"ring.

5. Install poppet and spring in cartridge. Install copper gasket and lubricated "O"ring on cartridge. Install cartridge in valve section and tighten to 20 ft. lbs. torque.

6. Adjust pressure setting (page 3D-35).

SWING CRISS-CROSS RELIEF VALVES

1. Loosen jam nut, then using an Allen wrench, remove adjusting screw.

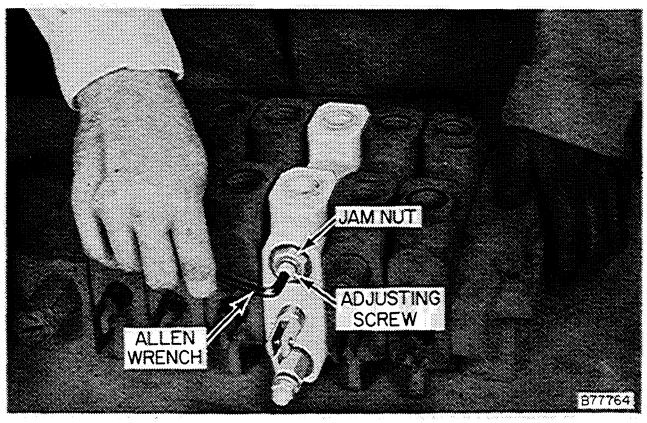

Figure 3D-73 - Removing Criss-Cross Valve

2. Remove the cartridge from valve section. Remove the large spring, floating seat, poppet, and small spring from the cartridge. Inspect all parts for damage and wear. The cartridge, poppet, floating seat, and two springs are available only in a complete relief valve assembly.

3. Replace "O"ring on poppet, then install well lubricated poppet in cartridge. Install floating seat in cartridge—end with cone shaped recess faces the poppet. Install the large spring, adjusting screw, and locknut. Install small spring on poppet.

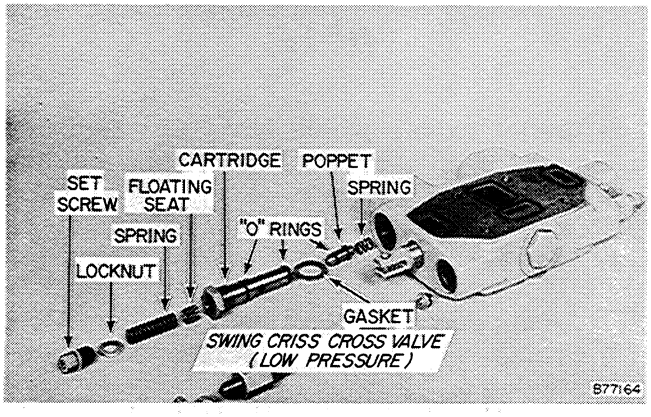

Figure 3D-74 - Swing Criss-Cross Valve

4. Lubricate the assembly and install in valve section. Tighten securely. Replacement valves are pre-set. If old relief valve is being reinstalled, adjust the pressure setting. See page 3D-35.

Assembling Valve Sections

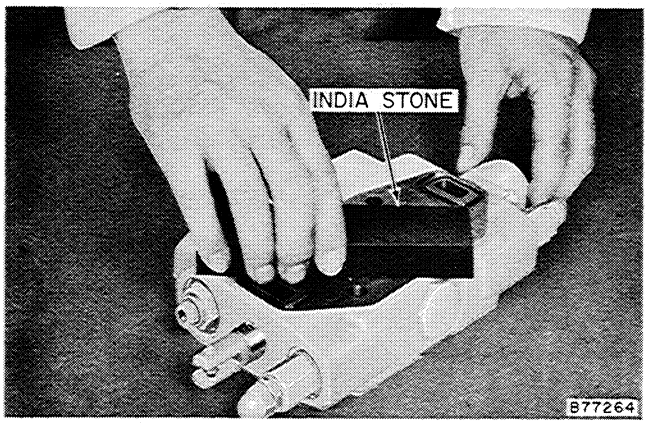

Figure 3D-75
Removing Nicks From Valve Section

1. Using a flat, smooth, fine oil stone in a rotating motion, remove any nicks or burrs. If there are high spots, they can be detected by using the stone. Keep stone flat on valve at all times.

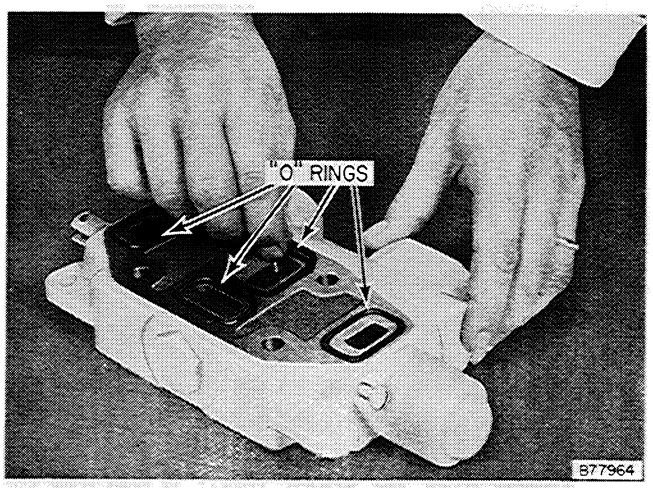

Figure 3D-76 - Installing "O" Ring

2. Carefully clean "O"ring grooves. Lubricate new "O"rings well and reinstall.

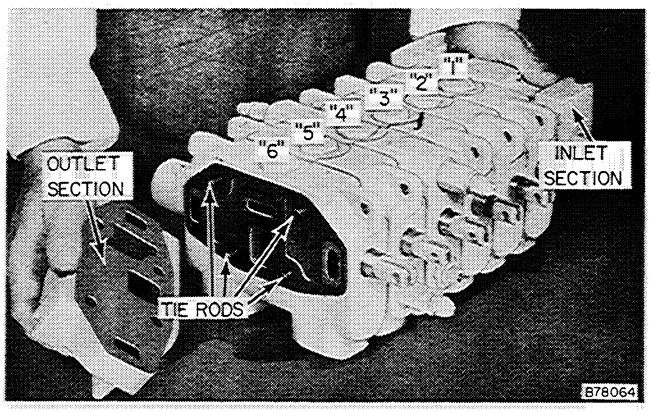

Figure 3D-77
Reassembling Backhoe Valve Sections

3. Assemble the valve sections on a clean, flat surface. Slip the tie rods through the inlet section. Install lubricated "O"rings in inlet section grooves. Slip tie rods through the right hand stabilizer section, previously tagged No. 1. Check the "O" rings to see that they are in place.

4. Using the same procedure, assemble other sections in the sequence as shown. Be sure sections are kept together to prevent the "O"rings falling out. If tie rods are tightened with an "O"ring partially out of groove, the "O"ring will be damaged, and the valve will leak.

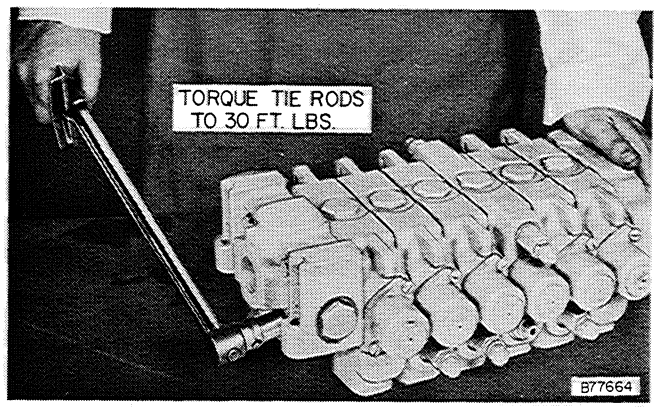

Figure 3D-78 - Tightening Tie Rods

5. Tighten tie rods to 30 ft. lbs. torque, evenly in increments of 5 ft. lbs. The torque is very important. If too high, there may be spool bind; if too low the valve may leak or cause the "O"rings to extrude.

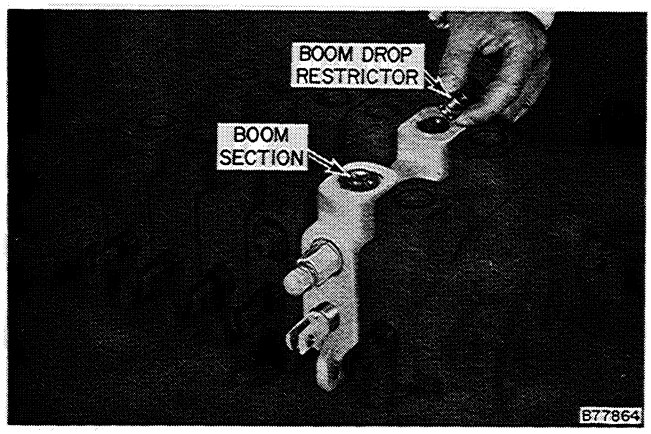

Figure 3D-79 - Boom Drop Restrictor

6. Install the boom drop restrictor in the bottom port of the boom section. Install the restrictor with large diameter toward valve spool.

7. Before the control valve is reinstalled on the tractor, the setting of the secondary relief valves can be checked and adjusted by either of two methods.

   a. Using special fitting D12806. See page 3D-35.

   b. Connecting a hand pump directly to the control valve port. See page 3D-35.

NOTE

Relief valves which have been replaced as part of a complete valve section are pre-set. Relief valves which have been replaced individually or repaired must be adjusted to their specified setting.

8. Mount the control valve on the mounting frame with three capscrews and lockwashers. Shim between the valve and mounting frame to eliminate the possibility of distorting the valve.

9. Install the connectors, hoses, and tubes on the valve. Make sure they are in their original position.

10. Install the backhoe on the tractor. See page 3D-13.

11. Check and adjust the main relief valve pressure setting. Page 3D-37.

12. Actuate the control levers—the backhoe should operate as shown in Figure 3D-38. If not, hoses have been switched.

DIVERTER VALVE

Removal

1. The diverter valve is located on the tractor frame under the left hand lift cylinder. Disconnect the three hydraulic lines from the diverter valve. Cap the openings. Figure 3D-36.

2. Disconnect the control linkage.

3. Unbolt the diverter valve from the tractor.

Disassembly

1. Remove the detent plug, spring, and plunger.

2. Remove the valve spool.

3. Remove the upper and lower valve spool oil seals and "O"rings.

Inspection

1. Inspect for a broken or weak detent spring.

2. Inspect the body and spool for nicks, scoring, or damage. Replace the complete valve if either of these parts is damaged.

3. If seal leakage is indicated, replace the seals and "O"rings. Seal repair kit A19958, which contains two seals and two "O"rings, is available.

Assembly

1. Install new housing "O"ring and spool "O"ring.

2. Install new upper and lower oil seals with the lips pointing outward, away from the center of the valve. See Inset A, Figure 3D-80.

3. Lubricate the valve spool with Case Hi-Lo TCH oil and carefully install from the top of the body. Do not damage the oil seals.

4. Install detent plunger, spring, new "O" ring, and plug.

5. Reinstall the valve and connect the hydraulic lines and linkage.

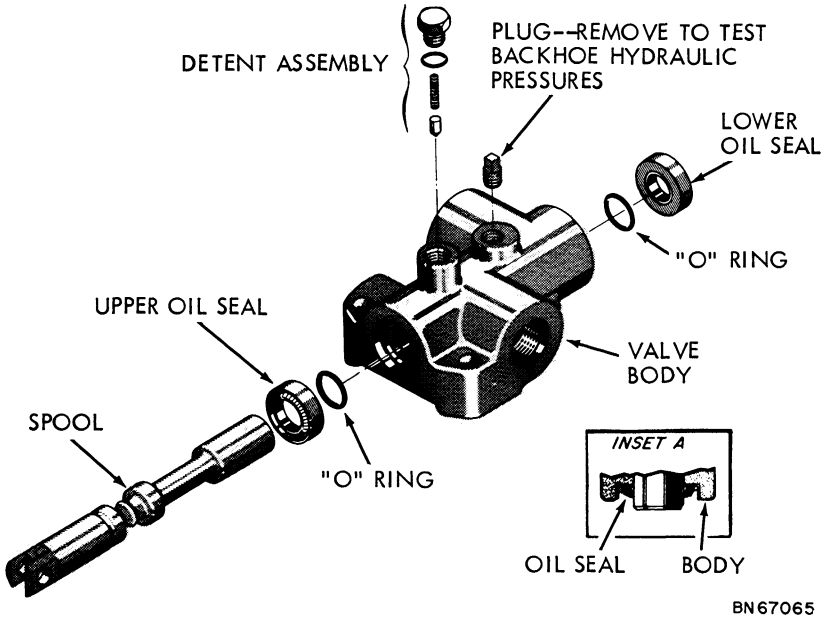

Figure 3D-80 - Exploded View of Diverter Valve

HYDRAULIC CYLINDERS
SPECIFICATIONS

CYLINDER	CASE NO.	TUBE DIA.	ROD DIA.	STROKE	CLOSED LENGTH	PISTON ROD BOLT TORQUE
		MODEL 34 BACKHOE				
Stabilizers (2)	D40794	3-1/2"	1-3/4"	16-3/8"	28-3/8"	475-525 Ft. Lbs.
Boom	D40420	4-1/2"	2-1/4"	39-3/16"	51-9/16"	700-750 Ft. Lbs.
Dipper	D38491	4-1/2"	2-1/4"	35-1/8"	47-1/2"	900-950 Ft. Lbs.
Bucket	D38492	4"	2-1/4"	27-1/4"	39-5/16"	900-950 Ft. Lbs.
Swing (2)	L.H. D37625 R.H. D37626	4"	1-3/4"	11"	7-1/2"	700-750 Ft. Lbs.
Relief Valve Setting 3700-4100 P.S.I. @ 5 G.P.M.						
		MODEL 33 BACKHOE				
Stabilizers (2)	D40794	3-1/2"	1-3/4"	11-1/2"	27-3/4"	475-525 Ft. Lbs.
Boom	D40414	4"	2"	39-3/16"	51-9/16"	700-750 Ft. Lbs.
Dipper	D37623	4"	2"	35-1/8"	47-1/2"	900-950 Ft. Lbs.
Bucket	D37622	3-1/2"	1-3/4"	27-1/4"	39-5/16"	475-525 Ft. Lbs.
Swing (2)	L.H. D37625 R.H. D37626	4"	1-3/4"	11"	7-1/2"	700-750 Ft. Lbs.
Relief Valve Setting 3700-4100 P.S.I. @ 5 G.P.M.						
NOTE Torque all packing glands 100-200 ft. lbs.						

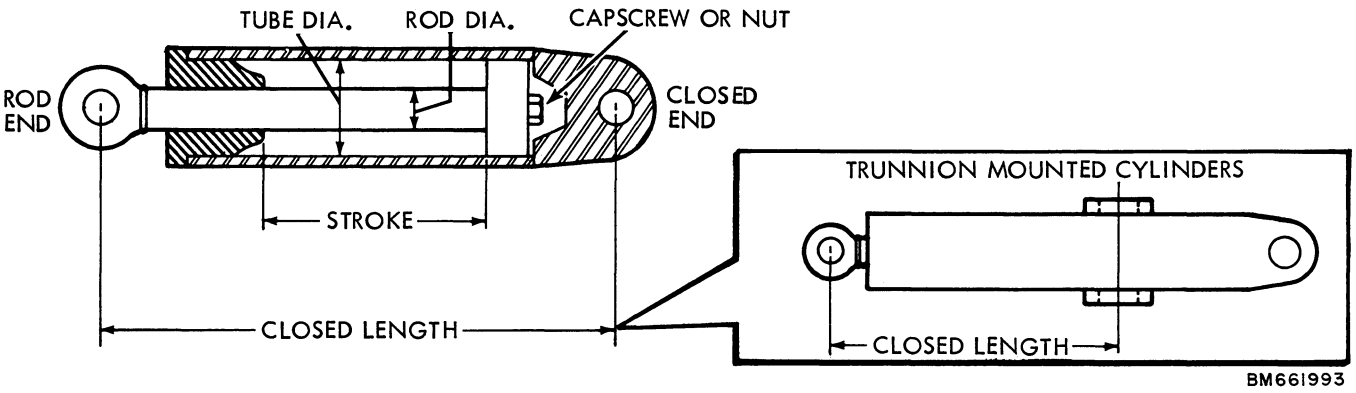

Figure 3D-81

CYLINDER TROUBLE SHOOTING

POSSIBLE CAUSES	REMEDY
Bent Piston Rods	
1. Failure to lubricate cylinder pivot pin.	1. Lubricate every ten hours.
2. Bent dipper arm or other misalignment.	2. Replace parts as required.
3. Inoperative secondary relief valve.	3. Check relief valve opening pressure.
4. Nut or capscrew on piston rod loose.	4. Replace nut or capscrew. Torque to specification on page 3D-62.
5. Hoses not connected to proper ports in control valve.	5. Make certain secondary relief valve is connected in circuit to correct end of cylinder. Figure 3D-10.
6. Main relief valve set too high.	6. Adjust setting.
Loss of Operating Pressure	
1. Nut or capscrew off piston rod.	1. Replace nut or capscrew.
2. Broken piston.	2. Replace piston.
3. Worn packing.	3. Replace packing.
Cylinder Operation Slow or Jerky	
1. Worn cylinder packing.	1. Repack cylinders.
2. Leakage past secondary relief valve (if in circuit).	2. Service secondary relief valve as required.
3. Valve spool not completely open.	3. Check spool travel.
4. Two spools operated or "feathered" at same time.	4. Cylinder of least resistance will operate.
5. External leakage from valve, cylinder or lines.	5. Service applicable component.
6. Partially restricted hydraulic oil filter.	6. Replace hydraulic oil filter element.
7. Engine speed too low.	7. Increase engine speed to recommended R.P.M.
8. Secondary relief valves held open with chips or set too low.	8. Check for foreign matter and then check "O"rings on secondary relief valve: adjust secondary relief valve pressures.
9. Load larger than capacity.	9. Reduce load, see Operator's Instruction Manual.
10. Spool not moved to full stroke.	10. Check spool travel and control linkage.
11. Undetermined leakage.	11. Check system with flowmeter.
Cylinders Creep in Hold Position	
1. Worn packing.	1. Repack cylinders.
2. Excessive clearance between valve spool and spool bore.	2. Replace valve section.
3. Leakage past secondary relief valve (if in circuit).	3. Service secondary relief valve as required.

POSSIBLE CAUSES	REMEDY
4. External leakage from valve, cylinder, or lines.	4. Service applicable component.
5. Valve spool not returned to neutral.	5. Check spool travel.
6. Undetermined leakage.	6. Check system with flowmeter.

Cylinder Moves In Wrong Direction

1. Hoses improperly connected.	

Boom Fails to Start and Stop Smoothly

1. Criss-cross relief valves set too high.	1. Check and adjust setting.
2. Cushion stop mechanism broken.	2. Disassemble cylinder(s) and replace broken parts.
3. Cushion stop relief valve set too high.	3. Check setting and adjust relief valve in both swing cylinders.

REMOVING BACKHOE CYLINDERS

Bucket Cylinder

1. Raise the boom and dipper slightly. Then place a block under the end of the dipper arm to take the weight off the bucket. Rest the dipper on the block.

2. With the engine shut off, move the bucket control lever in both directions to equalize hydraulic pressures.

3. Clean the exterior of the cylinder and the fittings with solvent.

4. Disconnect hoses from tubes at cylinder. Cap or plug exposed openings. Remove tubes, clamps, and attaching hardware.

5. Remove a snap ring and washer from both mounting pins—drive out the pins. Two extra washers will also be removed from the rod end of the cylinder.

Crowd (Dipper) Cylinder

1. Extend the bucket and dipper and lower the boom to ground level. As a precaution, place a block or other support under the area of the dipper pivot pin.

2. With the engine shut off, move the crowd control lever in both directions to equalize pressures.

3. Clean the exterior of the cylinder and the fittings with solvent.

4. Disconnect hoses and cap or plug all exposed openings immediately.

5. Remove a snap ring and washer from both mounting pins—drive out the pins. On Model 33 Backhoes, two extra washers will also be removed from each pin.

Boom Cylinder

1. Extend the bucket and dipper and lower the boom to ground level. As a precaution, support the area under the dipper pivot pin.

2. With the engine shut off, move the boom control lever in both directions to equalize hydraulic pressures.

3. Clean the exterior of the cylinder and the fittings with solvent.

4. Disconnect the hoses and cap or plug the exposed openings. The hose to the closed end of the cylinder must first be disconnected at the control valve.

5. Remove a snap ring and washer from both mounting pins—drive out the pins. On Model 33 Backhoes, two extra washers will also be removed from each pin.

Swing Cylinders

1. Extend the boom and dipper and lower the bucket to ground level.

2. With the engine shut off, move the swing control lever or pedals to equalize hydraulic pressures.

3. Clean exterior of the cylinder(s) with solvent.

4. Disconnect the hoses:

   a. Trace the hose from the rod end of the cylinder to the control valve and disconnect the hose at the control valve.

   b. Disconnect both of the short cylinder to cylinder hoses from the elbows located at the piston end of both swing cylinders.

5. Remove the capscrew, lockwasher, and nut from the bottom of the swing tower. This capscrew acts as a retainer for the cylinder rod pin. Drive the pin down from inside the swing tower and out the bottom.

6. The cylinder is trunnion mounted to the mounting frame. Two pins, bolted to the mounting frame, fit into the bores of the cylinder trunnion. Remove these pins (one is bolted from the underside of the mounting frame). Each pin has two 1/2" - 13 N.C. tapped holes for pushers, if they are needed.

NOTE!

It may be necessary to disconnect one or more hoses from the control valve to provide clearance when removing the top mounting pin in step 6.

Stabilizer Cylinders

1. Lower the stabilizer to the ground.

2. With the engine shut off, move the stabilizer control lever back and forth to equalize hydraulic pressures.

3. Remove the cylinder guard strap, if so equipped.

4. Pivot the cylinder guard back and clean the exterior of the cylinder and the fittings with solvent.

5. Disconnect the hoses and cap or plug the exposed openings. The hoses must be disconnected at the control valve.

6. Remove a snap ring and washer from each pin. Drive out the pins.

SERVICING A TYPICAL CYLINDER

IMPORTANT!

In this section, the term "Typical Cylinder" includes the following cylinders:

1. Stabilizer cylinders for Model 34 Backhoe.
2. Stabilizer cylinders for Model 33 Backhoe.
3. Bucket cylinder for Model 33 Backhoe.
4. Dipper cylinder for Model 33 Backhoe.

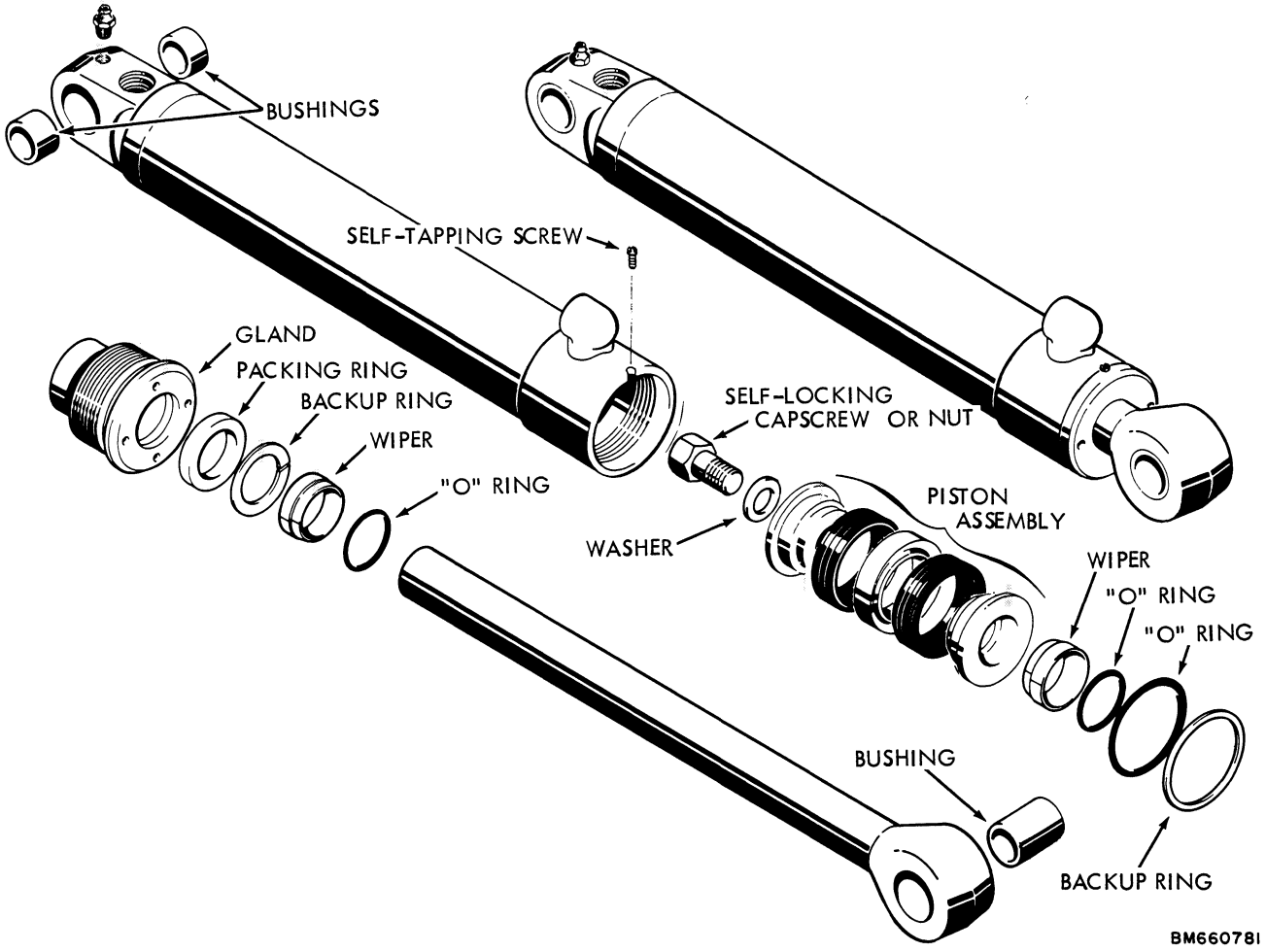

Figure 3D-82 - Exploded View of Typical Cylinder

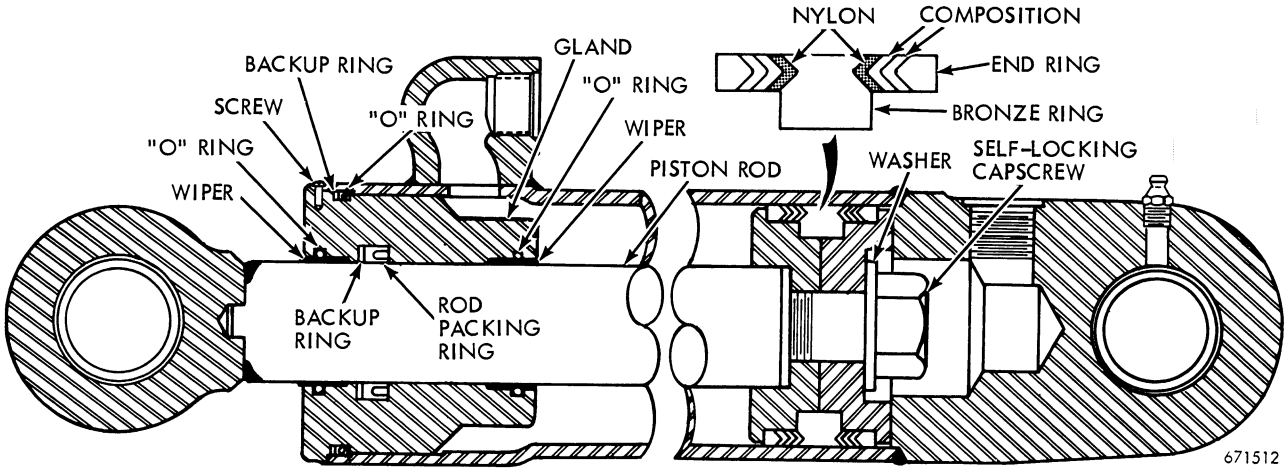

Figure 3D-83 - Cross Section Typical Gland Type Cylinder

Disassembly

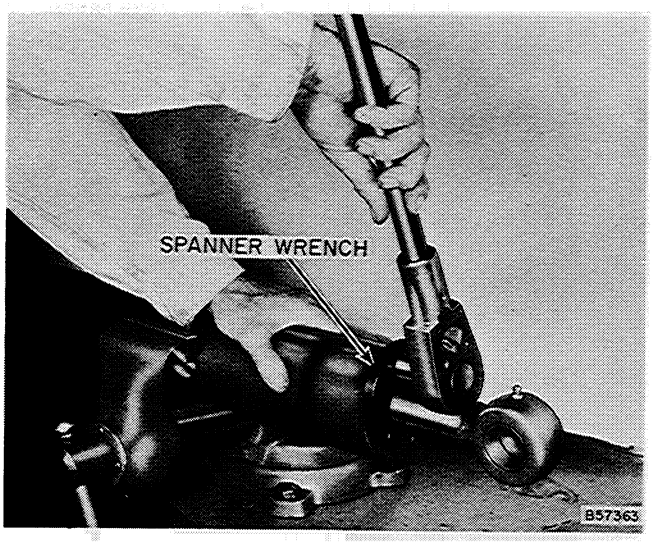

Figure 3D-84 - Unscrewing Gland Assembly

1. Place cylinder assembly in a vise, using caution not to distort tube. Remove the self-tapping screw that secures the gland to the tube. Use a spanner wrench and unscrew the gland assembly.

NOTE

The Case Spanner Wrench Kit Part No. D12631 is available from Central Parts Division. This kit contains the various size wrenches needed to disassemble and assemble Case cylinder glands. Figure 3D-85.

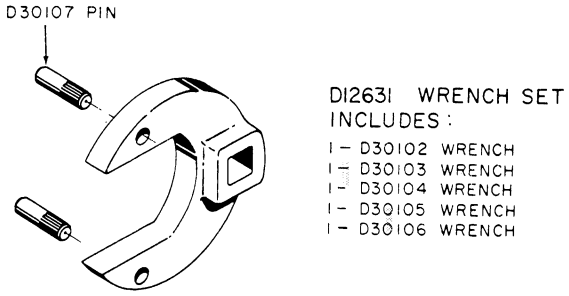

Figure 3D-85 - Case Spanner Wrench Set

2. Carefully pull the piston rod and gland assemblies out of the tube. Do not allow the rod to "cock" when it is removed, as this could damage internal parts.

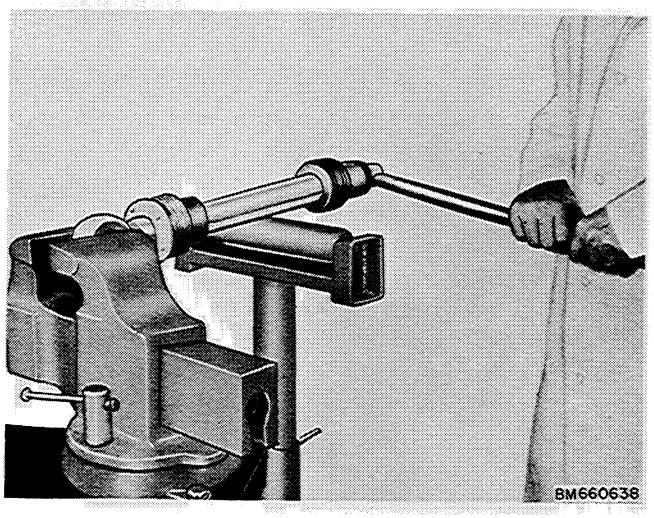

Figure 3D-86-Removing Rod Nut or Capscrew

3. Remove the self-locking capscrew from the end of the piston rod. These are highly torqued and will require considerable force to loosen.

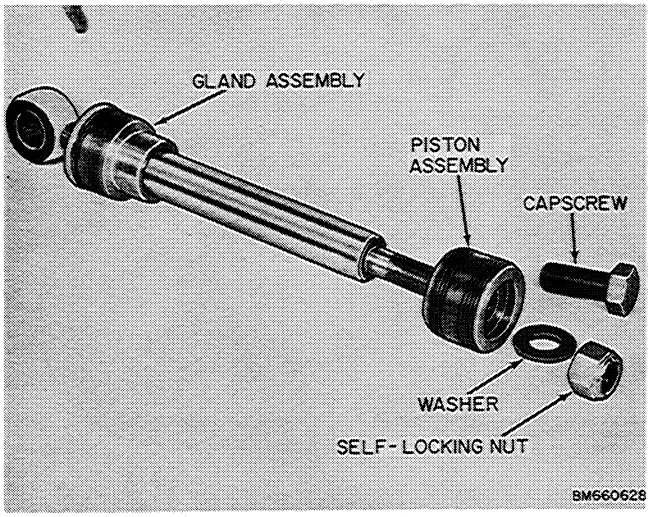

Figure 3D-87 - Removing Piston Assembly

4. Remove the washer from the piston rod. Remove the piston packing assembly. To disassemble the piston packing, separate the two piston halves. Remove the center ring. Remove the six chevron rings and two outer rings, one at a time.

5. Remove the gland assembly from the piston rod. If necessary, the gland can be removed by driving it off the rod with a soft hammer. Remove the "O" ring and backup ring from the outside of the gland.

6. Remove the two wiper seals, one from each end of the gland.

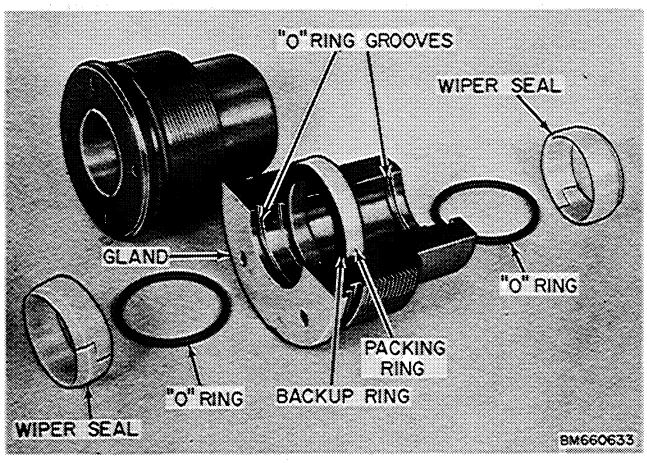

Figure 3D-88 - Removing Wiper Seals

7. Remove the "O"ring from each end of the gland.

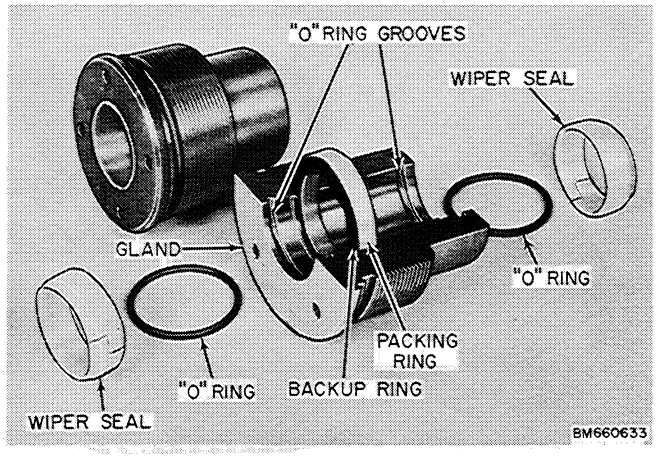

Figure 3D-89 - Removing Gland "O" Rings

8. Remove the backup ring and packing ring with a screwdriver. Carefully wash all parts in solvent and place on a clean paper. If a cylinder packing kit is being installed, all packing parts and seals should be discarded.

Inspection

1. Carefully clean all parts in solvent and dry with compressed air.

2. Discard all "O"rings, seals, and packing. Replace with new parts. A kit is available for each cylinder for replacing the packing and sealing assemblies. Refer to the Case Parts Catalog.

3. Carefully inspect the remaining parts for damage and wear. Replace as necessary.

4. Inspect the cylinder tube. If it has deep grooves or score marks, or has been severely damaged in any way, it should be replaced.

5. Inspect the piston rod for alignment. Replace if bent—do not attempt to straighten. The rod eye is replaceable. Follow the instructions on page 3D-71.

6. Inspect the bushings. Replace if necessary.

7. Before reassembling, remove any minor nicks, scratches, etc. on the rod or in the cylinder tube with medium grit emery cloth. Polish with a rotary motion rather than lengthwise.

Assembly of Packing Gland

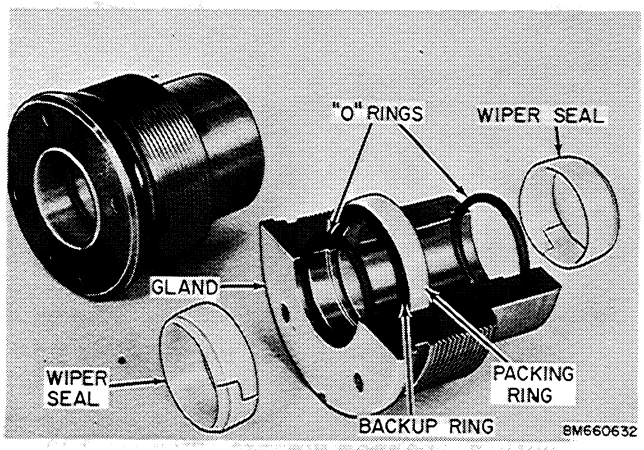

Figure 3D-90
Installing Packing Ring and Backup Ring

1. Install a lightly lubricated packing ring inside the gland. Install with the lip facing inward toward the small end. If the material is cold and stiff, "work" it in your hand to warm it and make it more flexible.

2. From the large end of the gland, install the backup ring (do not lubricate). Be sure the packing and backup rings are fully seated in their groove.

3. Dip new "O"rings in hydraulic oil and install one in the "O"ring groove at each end of the gland.

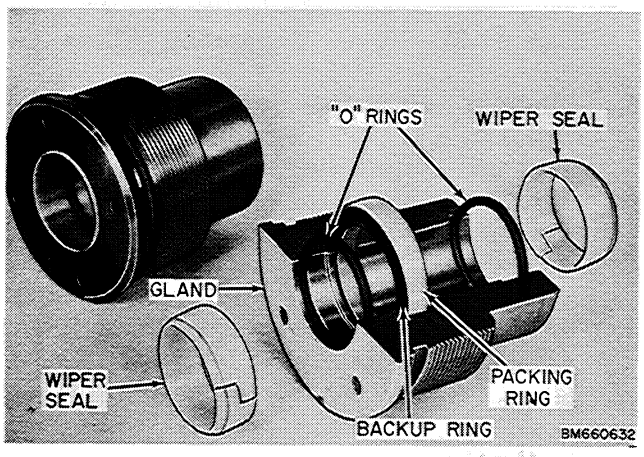

Figure 3D-91 - Installing Gland "O"Rings

4. Install new wiper seals, one inside each end of the gland. The narrow edge goes toward the outside of the gland. "Snap" into place and make sure the cut is fully mated.

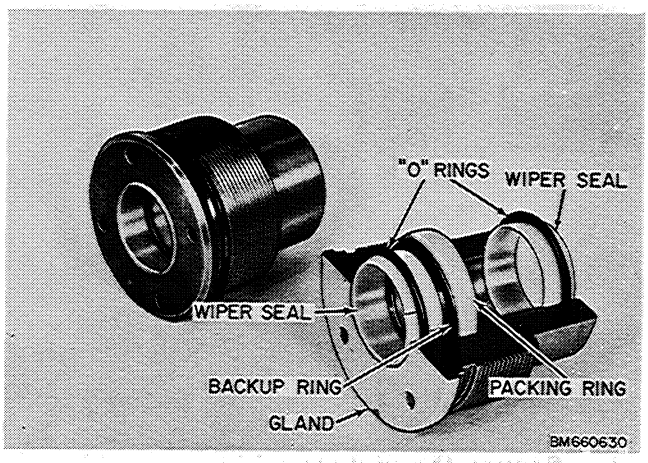

Figure 3D-92 - Installing Wiper Seals

5. Install the backup ring and "O"ring on the outside of the gland.

6. Install the gland assembly on the piston rod. If necessary, the gland assembly can be driven onto the rod with a soft hammer.

Assembly of Piston Packing

1. Refer to the cross-sectional illustration, Figure 3D-83.

   a. Dip the packing rings in hydraulic oil. Install a hard outer ring on each of the piston halves.

   b. Install the chevron rings with the "vee" of the chevrons pointing toward the center of the piston. Figure 3D-83.

NOTE

Late production cylinders contain two hard nylon chevron rings in the assembly. Refer to Figure 3D-83 for order of assembly.

   c. Install bronze center ring on one of the assembled piston halves. Fit the two halves together. Install the assembly on the piston rod with the deeper of the two counterbores over the rod.

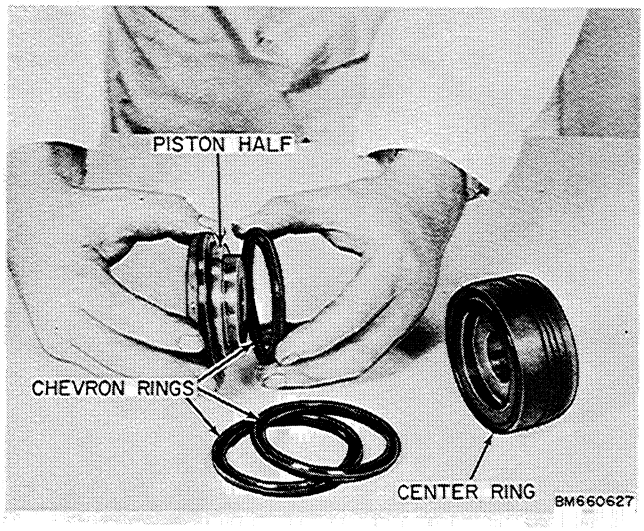

Figure 3D-93 - Assemble the Piston Packing

2. Secure the piston packing assembly to the piston rod with a washer and self-locking capscrew. Torque the capscrew or nut to the specification listed on page 3D-62.

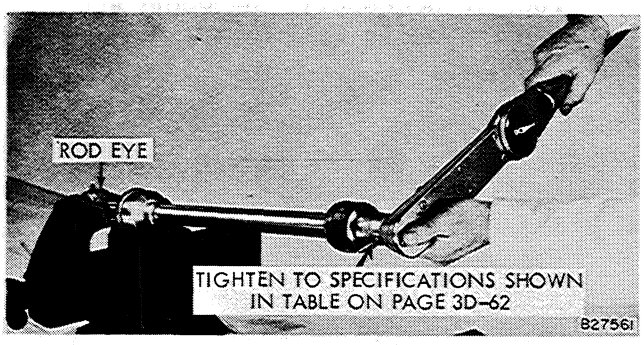

Figure 3D-94 - Torque Rod Nut or Capscrew

Final Assembly

1. Lubricate the cylinder tube and piston packing thoroughly and install as shown. After the packing has started in the smooth surface of the tube, slide the gland into position. Place a rod in the piston rod eye and work the piston rod assembly farther into the tube. Keep piston rod in a straight line with the cylinder tube at all times.

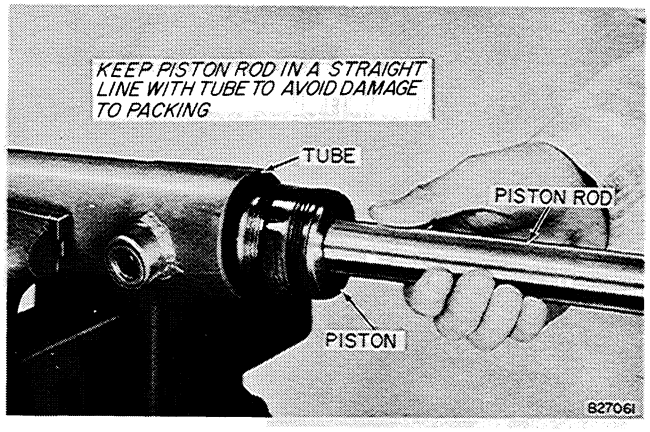

Figure 3D-95 - Installing Piston Rod

2. Screw the gland into the tube and tighten with a spanner wrench. Torque 100-200 ft. lbs. Make sure the torque wrench is parallel with the spanner wrench.

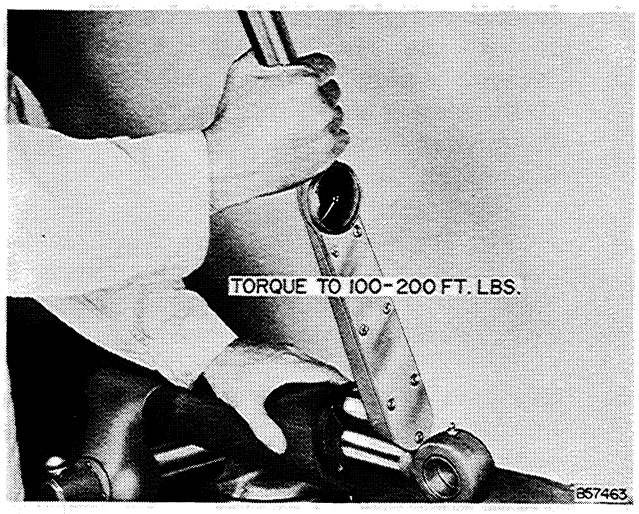

Figure 3D-96 - Tightening Gland

3. Tighten until the specified torque is reached and the self-tapping screw holes line up. Install the self-tapping screw. If a new gland or tube is being used, drill a new hole for the self-tapping screw, half in the tube and half in the gland. Do not drill in line with spanner wrench holes. Use a No. 26 drill and drill approximately 5/16" deep.

Installation

See page 3D-83.

Instructions for Installing Replacement Piston Rod Eye Assemblies

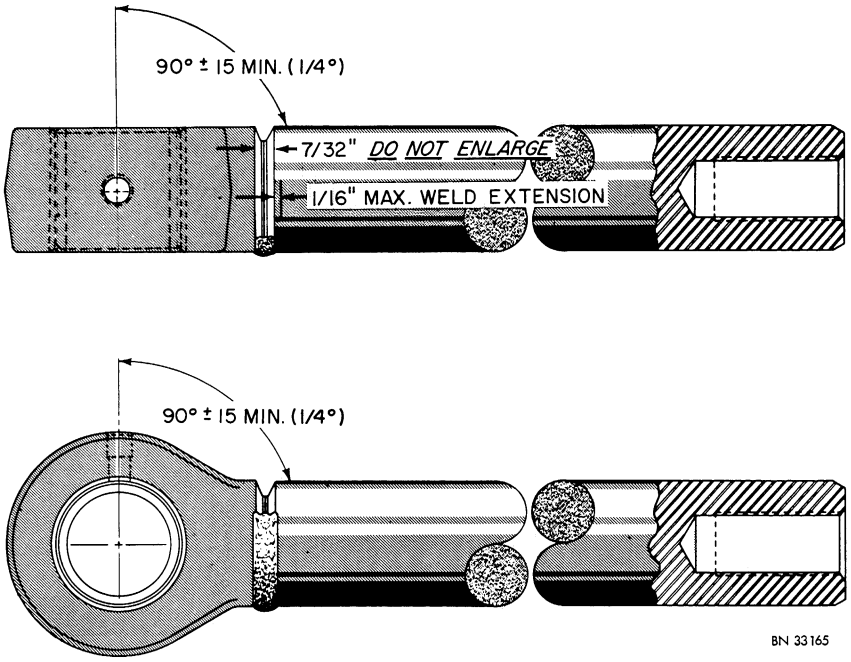

Figure 3D-97 - Dimensions for Welding

1. Disassemble the cylinder and remove the piston rod. Use care not to nick or scratch the piston rod when handling.

2. Grind all old weld from the piston rod. DO NOT ENLARGE THE ORIGINAL GROOVE. Protect the piston rod with tape or a cardboard sleeve while grinding.

3. Prepare to weld by positioning the eye assembly with respect to the piston rod.

   a. Center the eye assembly so that the centerlines of the eye assembly and the piston rod coincide.

   b. Position the eye assembly so that it is square with the piston rod and not "cocked" in any direction. See Figure 3D-97.

   c. When the eye assembly is properly positioned, tack weld the eye assembly to the piston rod on one side. Use a 1/8" L.H. rod (A.W.S. Class E-9018).

4. Start on the side opposite the tack weld and weld the eye assembly to the piston rod. Turn the piston rod while welding to obtain a 2 or 3 pass weld.

IMPORTANT!

5. After welding, check to make certain the following conditions have been met:

   a. Weld is not extended over 1/16" back from the edge of the groove onto the piston rod. Excess weld on the piston rod could damage the wiper seal in the cylinder gland.

   b. The eye assembly is centered so that the centerlines of the eye assembly and the piston rod coincide with each other.

   c. The eye assembly is square with respect to the piston rod.

SERVICING SWING CYLINDERS

Disassembly

1. Place cylinder assembly in a vise, using caution not to distort tube. Remove the self-tapping screw that secures the gland to the tube. Use a spanner wrench and unscrew the gland assembly.

2. Carefully pull the piston rod and gland assemblies from the tube. Do not allow the rod to cock when it is removed, as this could easily damage internal parts.

3. Place the piston rod eye in a vise and remove the self-locking bolt and washer. This bolt is torqued to 700-750 ft. lbs.

4. Remove the piston assembly and washer from the piston rod. If the piston halves remained together when removed from the piston rod, separate them. Remove the chevron packing, one at a time. Remove the hard end rings.

5. Remove the restrictor pin and spring from the end of the piston rod. Remove the spacer. The spacer will fall out of the bore of the piston rod if the piston rod is stood on end.

6. Remove the gland assembly from the piston rod. Use soft hammer, if necessary. Remove the "O"ring and backup ring from the exterior of the gland.

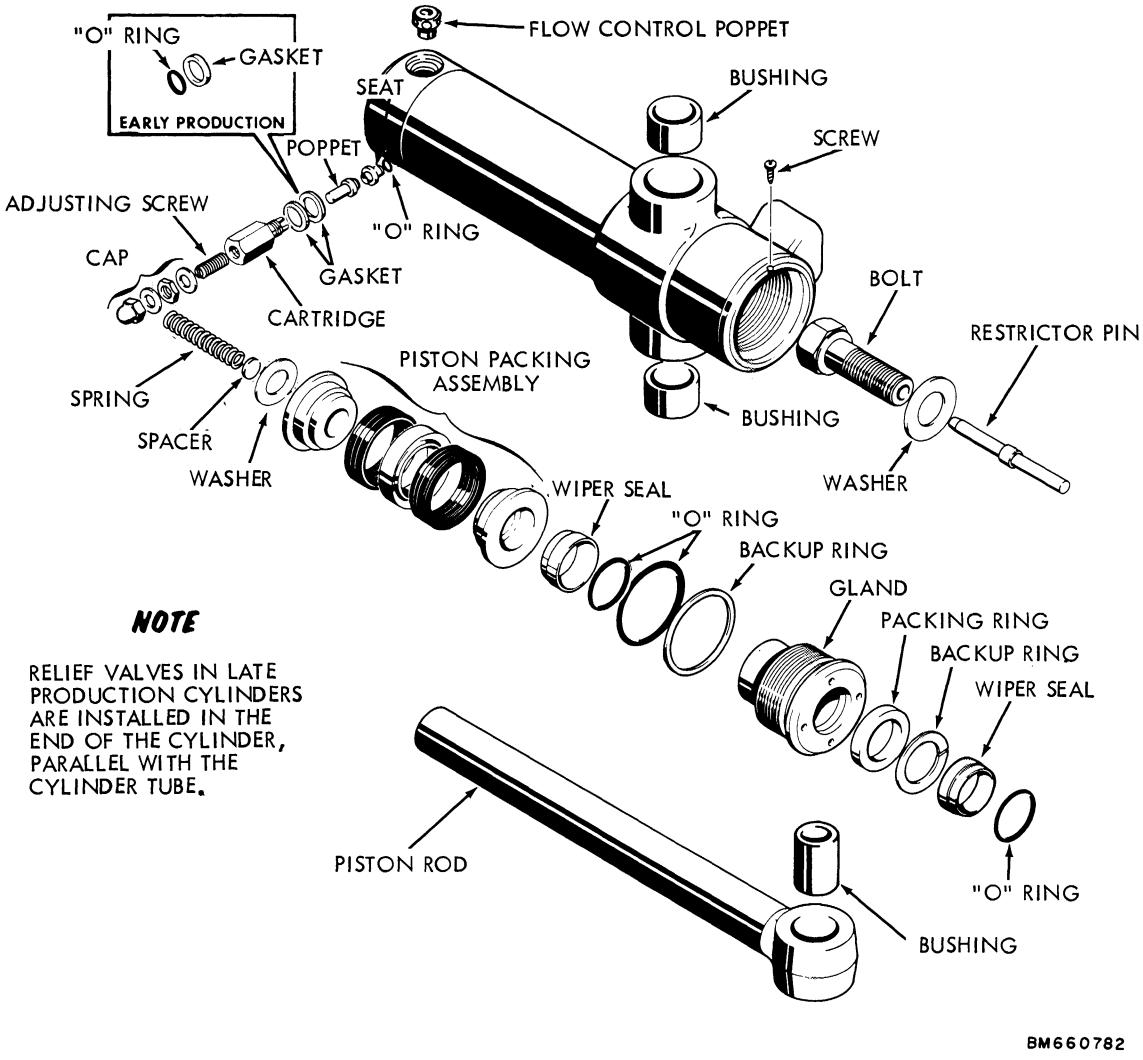

Figure 3D-98 - Exploded View of Swing Cylinder

7. Remove the two wiper seals, one from each end of the gland.

8. Remove the "O"ring from each end of the gland.

9. Remove the backup ring and packing ring with a screwdriver.

10. If it is to be serviced, remove the relief valve.

    a. Unscrew the relief valve cartridge from the closed end of the cylinder.

    b. Remove the relief valve seat by using a hooked tool in the same manner as shown and described on page 3D-50.

    c. The relief valve is similar to those used in the backhoe control valve. To service the valve, see page 3D-50. A kit is available for replacing the seat and poppet. See the Case Parts Catalog.

11. Remove flow control poppet by first removing elbow at closed end port. Lift out poppet.

Inspection

1. Carefully clean all parts in solvent and dry with compressed air.

2. Discard all "O"rings, seals, and packing. Replace with new parts. A kit is available for each cylinder for rebuilding the packing and sealing assemblies. Refer to the Case Parts Catalog.

3. Carefully inspect the remaining parts for damage and wear. Replace as necessary.

4. Inspect the cylinder tube. If it has deep grooves or score marks, or has been severely damaged in any way, it should be replaced.

5. Inspect the piston rod for alignment. Replace if bent—do not attempt to straighten. The rod eye is replaceable. Follow the instructions on page 3D-71.

6. Inspect the bushings. Replace if necessary, see page 3D-31.

7. Before reassembling, remove any minor nicks, scratches, etc. on the rod or in the cylinder tube with medium grit emery cloth. Polish with a rotary motion, rather than lengthwise.

Assembly of Packing Gland

1. Install a lightly lubricated packing ring inside the gland assembly. Install with the lip facing inward toward the small end. Figure 3D-99.

2. From the large end of the gland, install the backup ring (do not lubricate). Be sure the packing and backup rings are seated in their groove.

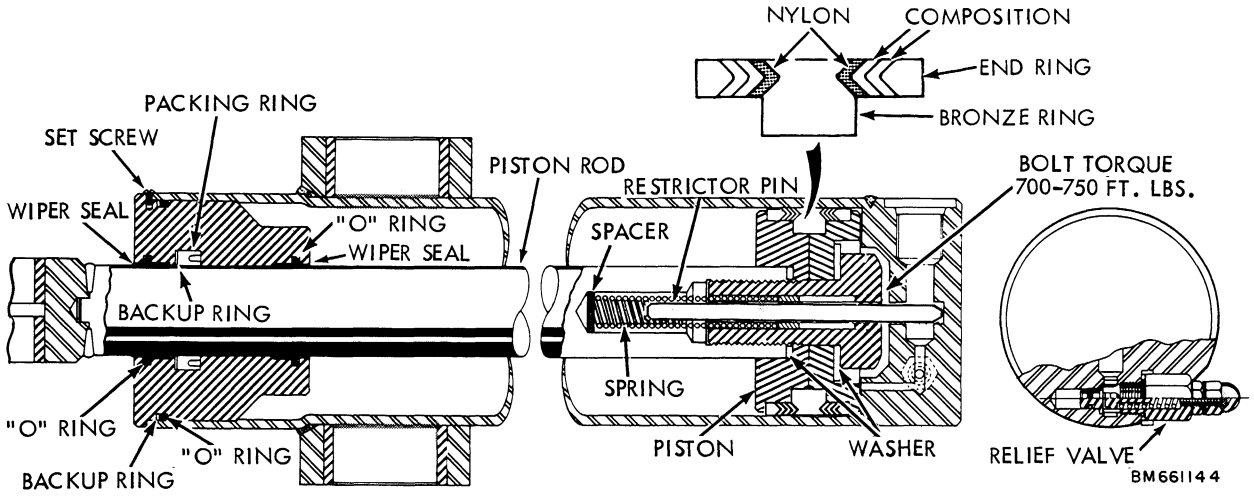

Figure 3D-99 - Cross Section of Swing Cylinder

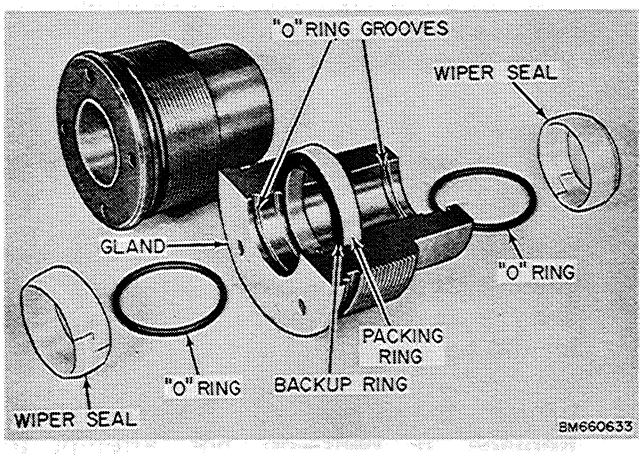

Figure 3D-100 - Installing Packing Ring and Backup Ring

3. Dip new "O"rings in hydraulic oil and install one in the "O"ring groove at each end of the gland.

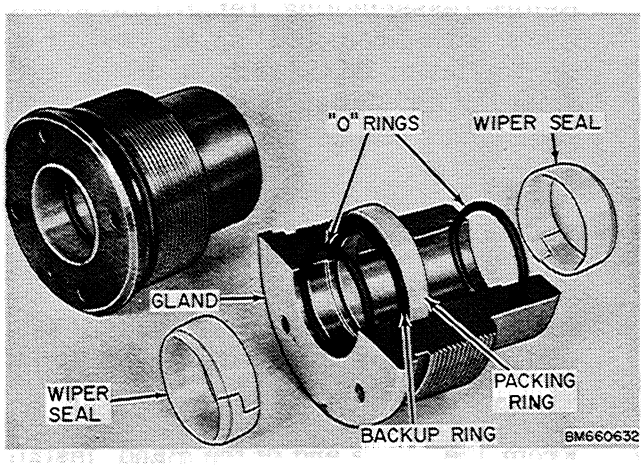

Figure 3D-101 - Installing Gland "O"Rings

4. Install new wiper seals, one inside each end of the gland. The narrow edge goes toward the outside of the gland. "Snap" into place and make sure the cut is fully mated.

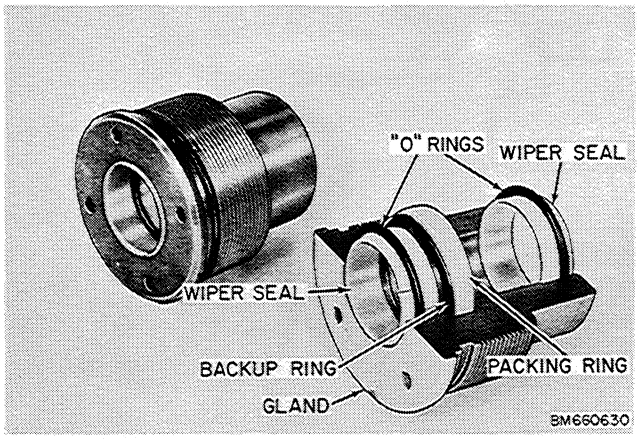

Figure 3D-102 - Installing Wiper Seals

5. Install the backup ring and "O"ring on the outside of the gland.

6. Install the gland assembly on the piston rod. If necessary, the gland assembly can be driven onto the rod with a soft hammer.

Assembly of Piston and Restrictor Pin

1. Refer to the cross-sectional illustration, Figure 3D-99. Dip the packing in hydraulic oil. Install the outer ring on each piston half. Install the chevron rings, one at a time, with the vee of the chevrons pointing to the center of the piston.

2. Install the bronze center ring and fit the two halves together. Place a washer in the piston half with the smaller and deeper bore and install this assembly on the piston rod.

3. Stand the piston rod on end, rod eye down, and drop the spacer into the bore of the piston rod. Install the spring and restrictor pin. The blunt end of the restrictor pin fits in the bore of the piston rod.

4. Install the self-locking bolt and washer over the restrictor pin and spring. Start to thread the bolt into the piston rod—tighten to 700-750 ft. lbs. torque.

Installing Piston Rod

1. Lubricate the cylinder tube and piston packing thoroughly and install in the manner shown in Figure 3D-95. After the piston has started in the smooth surface of the tube, slide the gland into position. Place a rod in the piston rod eye and work the piston rod farther into the tube. Keep the piston rod in a straight line with the cylinder tube.

2. Screw the gland into the tube and tighten with a spanner wrench. Torque 100-200

ft. lbs. Make sure the torque wrench is parallel with the spanner wrench.

3. Tighten until the specified torque is reached and the self-tapping screw holes line up. Install the self-tapping screw. If a new gland or tube is being used, drill a new hole for the self-tapping screw, half in the tube and half in the gland. Do not drill in line with spanner wrench holes. Use a No. 26 drill and drill approximately 5/16" deep.

4. Fill the end of a 1/8" pipe nipple with heavy grease. Place the relief valve seat on the end of the nipple and install into position in the bore of the end cap.

5. Screw the cartridge in place and torque to 30 ft. lbs.

6. Install flow control poppet into closed end port, small end first. Install 90° elbow in port.

Installing Cylinder

See page 3D-83.

BACKHOE BOOM CYLINDER

(MODEL 33 BACKHOE)
REFER TO FIGURES 3D-103 AND 3D-104

Disassembly

1. Place cylinder assembly in a vise, using caution not to distort tube. Remove the self-tapping screw that secures the gland to the tube. Use a spanner wrench and unscrew the gland assembly.

2. Carefully slip the piston rod and gland assemblies from the tube. Do not allow the rod to cock when it is removed, as this could easily damage internal parts.

3. Place the piston rod eye in a vise and remove the self-locking bolt and washer. This bolt is torqued to 700-750 ft. lbs.

4. Remove the piston assembly from the piston rod. If the piston halves remained together when removed from the piston rod, separate them. Remove the chevron packing rings, one at a time. Remove the hard end rings.

5. Remove the restrictor pin and spring from the end of the piston rod. Remove the spacer. The spacer will fall out of the bore of the piston rod if the piston rod is stood on end.

6. Remove the gland assembly from the piston rod. Use soft hammer, if necessary. Remove the "O"ring and backup ring from the exterior of the gland.

7. Remove the two wiper seals, one from each end of the gland.

8. Remove the "O"ring from each end of the gland.

9. Remove the backup ring and packing ring with a screwdriver.

Inspection

1. Carefully clean all parts in solvent and dry with compressed air.

2. Discard all "O"rings, seals, and packing. Replace with new parts. A kit is available for each cylinder for rebuilding the packing and sealing assemblies. Refer to the Case Parts Catalog.

3. Carefully inspect the remaining parts for damage and wear. Replace as necessary.

4. Inspect the cylinder tube. If it has deep grooves or score marks, or has been severely damaged in any way, it should be replaced.

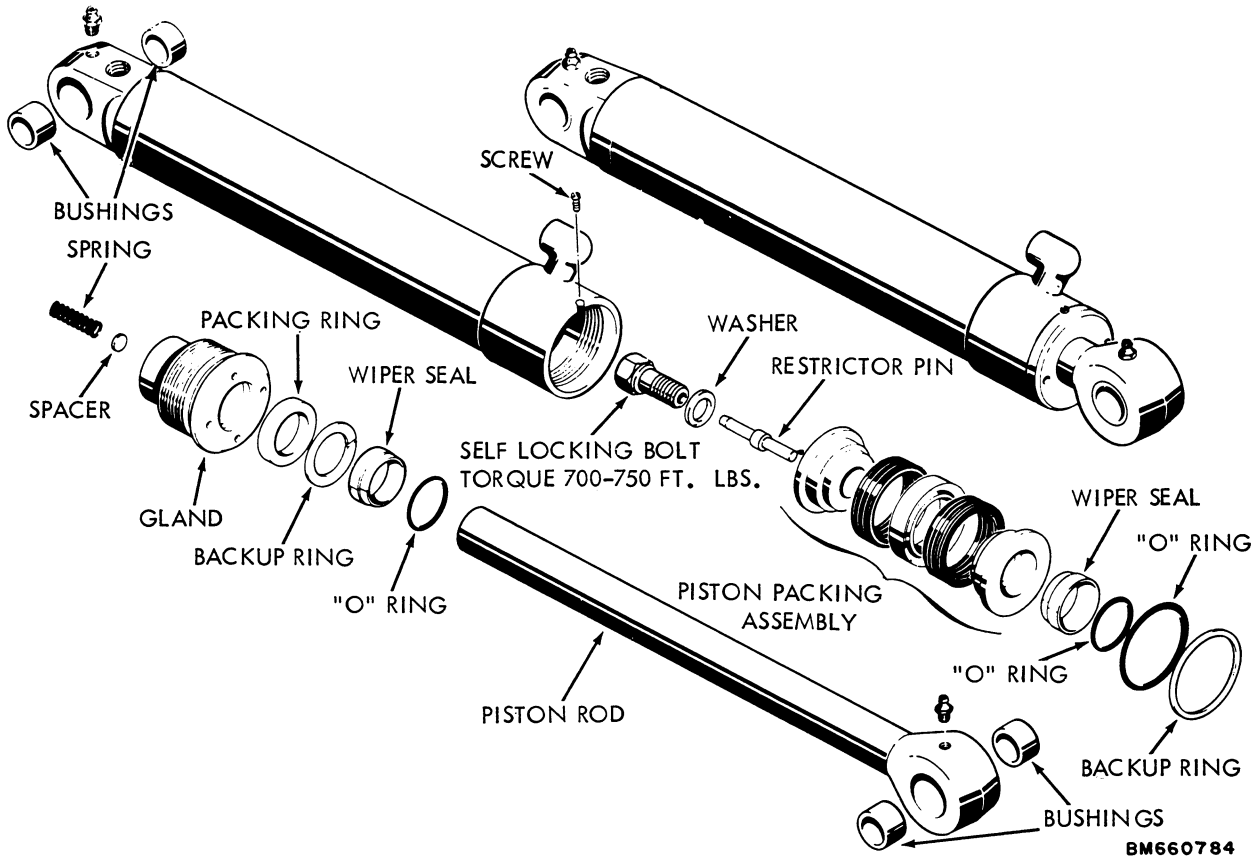

Figure 3D-103 - Exploded View of Boom Cylinder

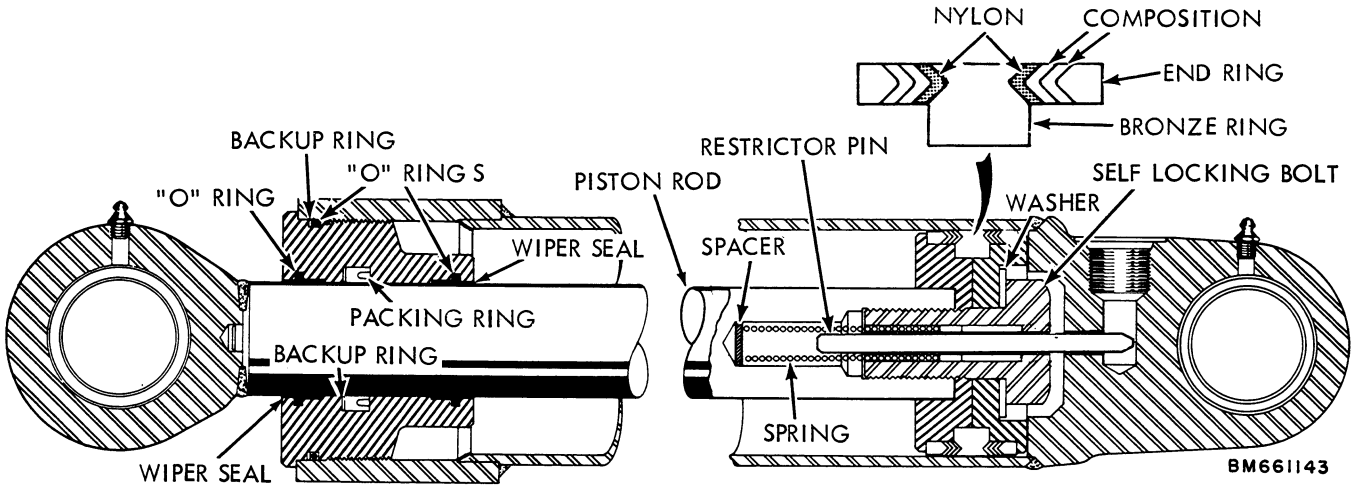

Figure 3D-104 - Cross Section View of Boom Cylinder

5. Inspect the piston rod for alignment. Replace if bent—do not attempt to straighten. The rod eye is replaceable. Follow the instructions on page 3D-71.

6. Inspect the bushings. Replace if necessary, see page 3D-31.

7. Before reassembling, remove any minor nicks, scratches, etc. on the rod or in the cylinder tube with medium grit emery cloth. Polish with a rotary motion, rather then lengthwise.

Assembly of Packing Gland

1. Install a lightly lubricated packing ring inside the gland assembly. Install with the lip facing inward toward the small end. If the material is cold and stiff, "work" it in your hand to warm it and make it more flexible.

2. From the large end of the gland, install the backup ring (do not lubricate). Be sure the packing and backup rings are seated in their groove.

3. Dip new "O"rings in hydraulic oil and install one in the "O"ring groove at each end of the gland.

4. Install new wiper seals, one inside each end of the gland. The narrow edge goes toward the outside of the gland. "Snap" into place and make sure the cut is fully mated.

5. Install the backup ring and "O"ring on the outside of the gland.

6. Install the gland assembly on the piston rod. If necessary, the gland assembly can be driven onto the rod with a soft hammer.

Assembly of Piston and Restrictor Pin

1. Refer to the cross-sectional illustration, Figure 3D-104. Dip the packing in hydraulic oil. Install the outer ring on each piston half. Install the chevron rings, one at a time, with the vee of the chevrons pointing to the center of the piston.

2. Install the bronze center ring and fit the two halves together. Install this assembly on the piston rod.

3. Stand the piston rod on end, rod eye down, and drop the spacer into the bore of the piston rod. Install the spring and restrictor pin. The blunt end of the restrictor pin fits in the bore of the piston rod.

4. Install the self-locking bolt over the restrictor pin and spring. Start to thread the bolt into the piston rod—tighten to 700-750 ft. lbs. torque.

Final Assembly

1. Lubricate the cylinder tube and piston packing thoroughly and install in the manner shown in Figure 3D-95. After the piston has started in the smooth surface of the tube, slide the gland into position. Place a rod in the piston rod eye and work the piston rod farther into the tube. Keep the piston rod in a straight line with the cylinder tube.

2. Screw the gland into the tube and tighten with a spanner wrench. Torque 100-200 ft. lbs. Make sure the torque wrench is parallel with the spanner wrench.

3. Tighten until the specified torque is reached and the self-tapping screw holes line up. Install the self-tapping screw. If a new gland or tube is being used, drill a new hole for the self-tapping screw, half in the tube and half in the gland. Do not drill in line with spanner wrench holes. Use a No. 26 drill and drill approximately 5/16" deep.

Installation

See page 3D-83.

BACKHOE BOOM CYLINDER

(MODEL 34 BACKHOE)

REFER TO FIGURES 3D-105 AND 3D-106.

Removal

See page 3D-65.

Disassembly

1. Place cylinder assembly in a vise, using caution not to distort tube. Remove the self-tapping screw that secures the gland to the tube. Use a spanner wrench and unscrew the gland assembly.

2. Carefully slip the piston rod and gland assemblies from the tube. Do not allow the rod to cock when it is being removed as this could damage internal parts.

3. Place the piston rod eye in a vise and remove the self-locking bolt and washer. This bolt is torqued to 700-750 ft. lbs.

4. Remove the piston assembly from the piston rod. If the piston halves remained together when removed from the piston rod, separate them. Remove the bronze center ring. Remove the chevron packing and end rings.

5. Remove the restrictor pin and spring from the end of the piston rod. Remove the spacer. The spacer will fall out of the bore of the piston rod if the piston rod is stood on end.

6. Remove the gland assembly from the piston rod. Use a soft hammer, if necessary. All parts in the gland assembly except the bronze-faced bushing are available for individual replacement, or included in the cylinder packing kit.

   a. From the outside of the gland assembly, remove the "O"ring and backup ring.

   b. From the large end of the gland assembly, remove the rod wiper ring.

   c. Use a screwdriver or similar tool and work the packing ring and backup ring from their groove in the bore of the gland.

Inspection

1. Carefully clean all parts in solvent and dry with compressed air.

2. Discard all "O"rings, seals, and packing. Replace with new parts. A kit is available for rebuilding the piston and gland assemblies. Refer to the Case Parts Catalog.

3. Carefully inspect the remaining parts for damage and wear. Replace as necessary. If either the gland or bronze-faced bushing must be replaced, they are available as a factory-assembled unit only.

4. Inspect the cylinder tube. If it has deep grooves or score marks, or has been severely damaged in any way, it should be replaced. Severe scoring could be an indication of hydraulic oil contamination.

5. Inspect the piston rod for alignment. Replace if bent—do not attempt to straighten. The rod eye is replaceable. Follow the instructions on page 3D-71.

6. Inspect the bushings. Replace if necessary.

7. Before reassembling, remove any minor nicks, scratches, etc. on the rod or in the cylinder tube with medium grit emery cloth. Polish with a rotary motion, rather than lengthwise.

Assembly of Packing Gland

1. Install a lightly lubricated packing ring inside the gland assembly. Install with the lip facing inward toward the small end of the gland.

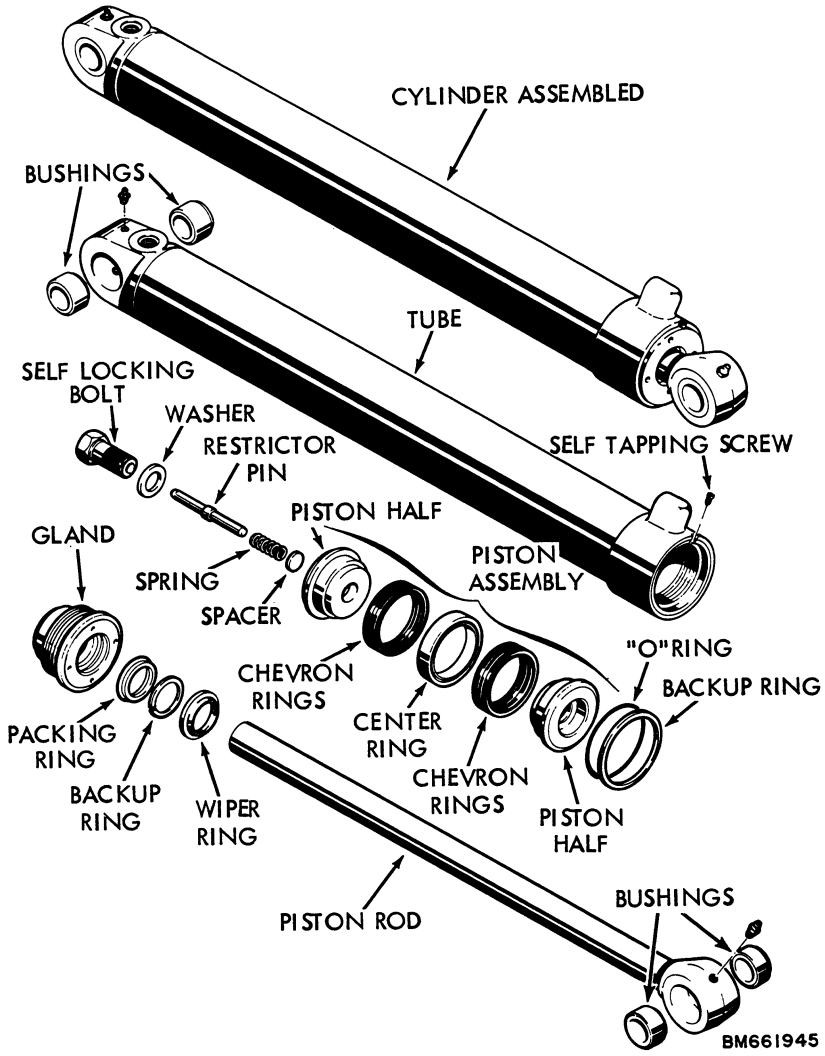

Figure 3D-105 - Exploded View of Boom Cylinder

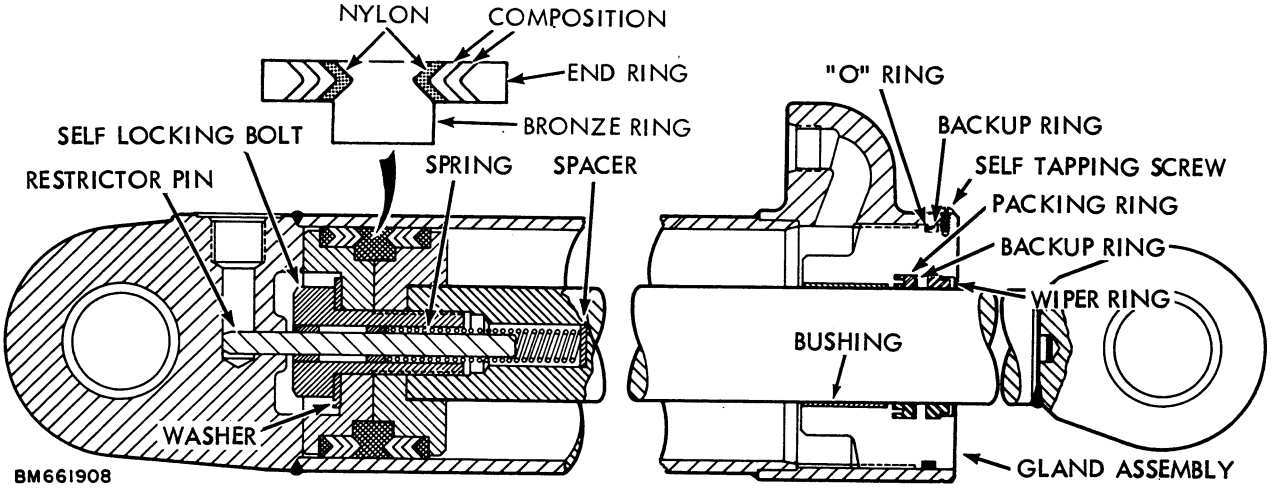

Figure 3D-106 - Cross Section of Boom Cylinder

2. From the large end of the gland, install the backup ring (do not lubricate). Be sure the packing and backup rings are seated in their groove.

3. Install the rod wiper ring in its groove in the large end of the gland. The lip faces toward the outside of the gland.

4. Install the backup ring and "O"ring on the outside of the gland.

5. Install the gland assembly on the piston rod. If necessary, the gland assembly can be driven onto the rod with a soft hammer.

Assembly of Piston and Restrictor Pin

1. Refer to Figure 3D-108. Dip the packing in hydraulic oil. Install the end ring on each piston half. Install the chevron rings, one at a time, with the vee of the chevrons pointing to the center of the piston.

2. Install the bronze center ring and fit the two halves together. Install this assembly on the piston rod.

3. Stand the piston rod on end, rod eye down, and drop the spacer into the bore of the piston rod. Install the spring and restrictor pin. The blunt end of the restrictor pin fits in the bore of the piston rod.

4. Install the self-locking bolt and washer over the restrictor pin and spring. Start to thread the bolt into the piston rod—tighten to 700-750 ft. lbs. torque.

Final Assembly

1. Lubricate the cylinder tube and piston packing thoroughly and install in the manner shown in Figure 3D-95. After the piston has started in the smooth surface of the tube, slide the gland into position. Place a rod in the piston rod eye and work the piston farther into the tube. Keep the piston rod in a straight line with the cylinder tube.

2. Screw the gland into the tube and tighten with a spanner wrench. Torque 100-200 ft. lbs. Make sure the torque wrench is parallel with the spanner wrench.

3. Tighten until the specified torque is reached and the self-tapping screw holes line up. Install the self-tapping screw. If a new gland or tube is being used, drill a new hole for the self-tapping screw, half in the tube and half in the gland. Do not drill in line with spanner wrench holes. Use a No. 26 drill and drill approximately 5/16" deep.

Installation

See page 3D-83.

CROWD AND BUCKET CYLINDERS

(MODEL 34 BACKHOE)

REFER TO FIGURES 3D-107 AND 3D-108.

Removal

See page 3D-64.

Disassembly

1. Place cylinder assembly in a vise, using caution not to distort tube. Remove the self-tapping screw that secures the gland to the tube. Use a spanner wrench and unscrew the gland assembly.

2. Carefully slip the piston rod and gland assemblies from the tube. Do not allow the rod to cock when it is being removed as this could damage internal parts.

3. Place the piston rod eye in a vise and remove the self-locking bolt and washer. This bolt is torqued to 900-950 ft. lbs.

4. Remove the piston assembly from the piston rod. If the piston halves remained together when removed from the piston

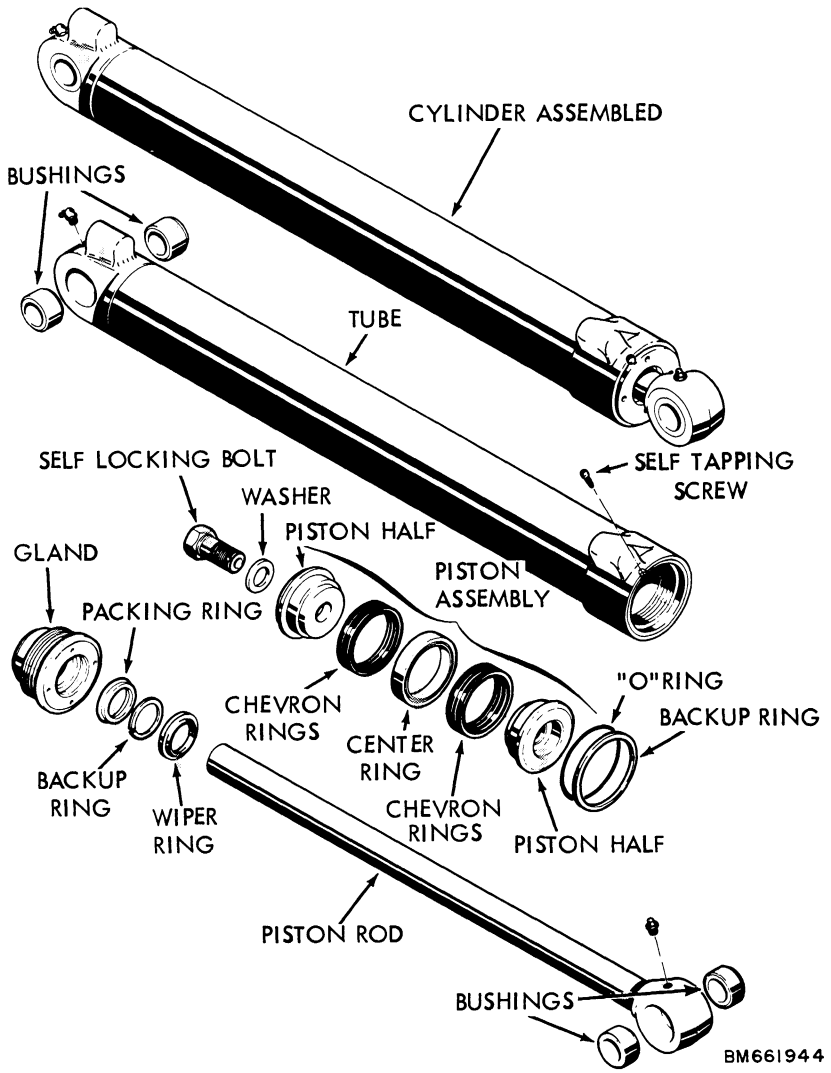

Figure 3D-107 - Exploded View of Crowd (Dipper) and Bucket Cylinders

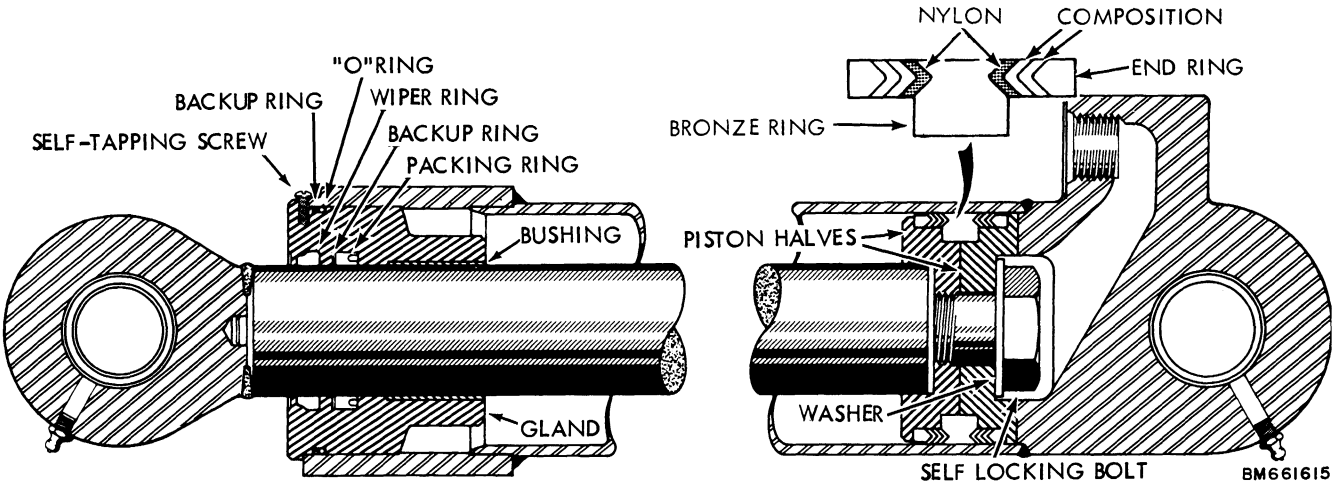

Figure 3D-108 - Cross Section View of Crowd (Dipper) and Bucket Cylinders

rod. separate them. Remove the bronze center ring. Remove the chevron packing and end rings.

5. Remove the gland assembly from the piston rod. Use a soft hammer to aid in removal, if necessary. All parts in the gland assembly except the bronze-faced bushings are available for individual replacement, or included in the cylinder packing kit.

   a. From the outside of the gland assembly, remove the "O"ring and backup ring.

   b. From the large end of the gland assembly, remove the rod wiper ring.

   c. Use a screwdriver or similar tool and work the packing ring and backup ring from their groove in the bore of the gland.

Inspection

1. Carefully clean all parts in solvent and dry with compressed air.

2. Discard all "O"rings, seals, and packing. Replace with new parts. A kit is available for rebuilding the piston and gland assemblies. Refer to the Case Parts Catalog.

3. Carefully inspect the remaining parts for damage and wear. Replace as necessary. If either the gland or bronze-faced bushing must be replaced, they are available as a factory-assembled unit only.

4. Inspect the cylinder tube. If it has deep grooves or score marks, or has been severely damaged in any way, it should be replaced. Severe scoring could be an indication of hydraulic oil contamination.

5. Inspect the piston rod for alignment. Replace if bent—do not attempt to straighten. The rod eye is replaceable. Follow the instructions on page 3D-71.

6. Inspect the bushings. Replace if necessary.

7. Before reassembling, remove any minor nicks, scratches, etc. on the rod or in the cylinder tube with medium grit emery cloth. Polish with a rotary motion, rather than lengthwise.

Assembly of Packing Gland

1. Install a lightly lubricated packing ring inside the gland assembly. Install with the lip facing inward toward the small end of the gland.

2. From the large end of the gland, install the backup ring (do not lubricate). Be sure the packing and backup rings are seated in their groove.

3. Install the rod wiper ring in its groove in the large end of the gland. The lip faces toward the outside of the gland.

4. Install the backup ring and "O"ring on the outside of the gland.

5. Install the gland assembly on the piston rod. If necessary, the gland assembly can be driven onto the rod with a soft hammer.

Assembly of Piston Packing

1. Refer to Figure 3D-108. Dip the packing parts in hydraulic oil. Install the end ring on each piston half. Install the chevron rings, one at a time, with the vee of the chevrons pointing to the center of the piston.

2. Install the bronze center ring and fit the two halves together. Install this assembly on the piston rod.

3. Secure the piston packing assembly to the piston rod with a washer and self-locking capscrew. Torque the capscrew to the specification listed on page 3D-62.

Final Assembly

1. Lubricate the cylinder tube and piston packing thoroughly and install in the manner shown in Figure 3D-95. After the piston has started in the smooth surface of the tube, slide the gland into position. Place a rod in the piston rod eye and work the piston farther into the tube. Keep the piston rod in a straight line with the cylinder tube.

2. Screw the gland into the tube and tighten with a spanner wrench. Torque 100-200 ft. lbs. Make sure the torque wrench is parallel with the spanner wrench.

3. Tighten until the specified torque is reached and the self-tapping screw holes line up. Install the self-tapping screw. If a new gland or tube is being used, drill a new hole for the self-tapping screw, half in the tube and half in the gland. Do not drill in line with spanner wrench holes. Use a No. 26 drill and drill approximately 5/16" deep.

Installation

See instructions below.

INSTALLING CYLINDERS

REFER TO FIGURES 3D-14 THROUGH 3D-17.

Bucket Cylinder

1. Attach the closed end of the cylinder to the dipper with a pin, two washers, and two snap rings.

2. Install the hoses, tubes, and clamping hardware.

3. The piston rod can now be positioned hydraulically. Attach the rod end of the cylinder to the bucket linkage as shown in Figure 3D-109. Grease fitting on rod eye must point up.

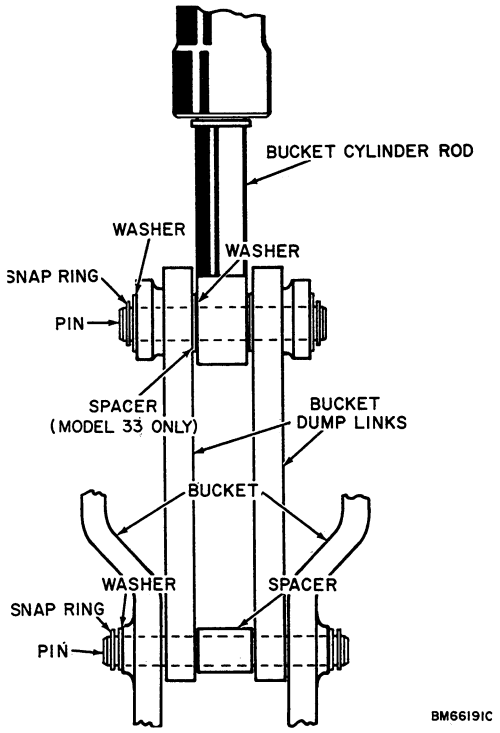

Figure 3D-109 - Installing Bucket Cylinder

Crowd (Dipper) Cylinder

1. Attach the closed end of the cylinder to the boom with a pin, two washers, and two snap rings. Washers fit on outside of mounting ears. On Model 33 Backhoes, install an additional washer (spacer) on each side of the closed end of cylinder.

2. Install the hoses, tubes, and clamping hardware.

3. The piston rod can now be positioned hydraulically. Attach the rod end of the cylinder to the dipper with a pin, two washers, and two snap rings. Grease fitting on rod eye must point up. On Model 33 Backhoes, install an additional washer (spacer) on each side of the cylinder rod eye.

Boom Cylinder

1. Attach the closed end of the cylinder to the swing tower with a pin, two washers, and two snap rings. On Model 33 Backhoes, install an additional washer (spacer) on each side of the mounting pin hole.

2. Connect the hoses.

3. The piston rod can now be positioned hydraulically. Attach the rod end of the cylinder to the boom with a pin, two washers, and two snap rings. On Model 33 Backhoes, install an additional washer (spacer) on each side of the rod eye. Grease fitting on rod eye must point up.

Swing Cylinders

1. Place the cylinder in the mounting frame and install the two trunnion pins into the cylinder. Attach each pin with four 1/2" - 13 N.C. hex. capscrews and lockwashers.

2. Connect the cylinder rod to the swing tower with a pin, driven up from the underside of the swing tower. Secure pin with 5/8" - 11 N.C. x 4" capscrew, lockwasher, and hex. nut.

3. Connect the hoses as shown in Figure 3D-110.

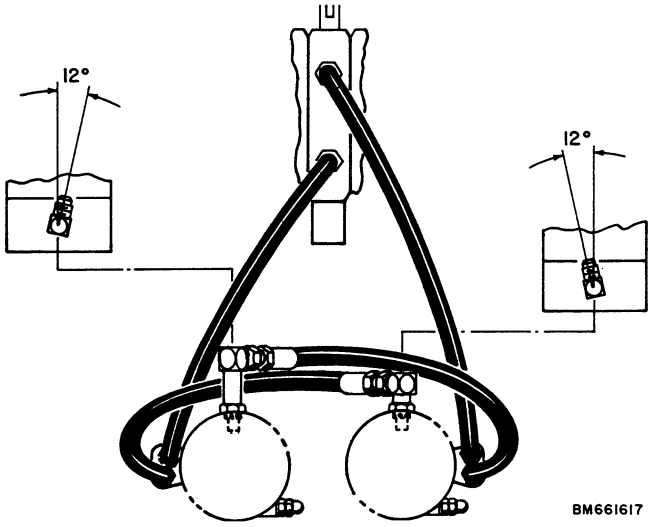

Figure 3D-110 - Installing Swing Cylinder

Stabilizer Cylinders

1. Place the cylinder in position and install the mounting pin, two washers, and two snap rings at the closed end of the cylinder.

2. a. On Model 34 Backhoes, attach the cylinder guard with the rod end mounting pin as shown in Figure 3D-111.

   b. On Model 33 Backhoes, attach the cylinder rod and cylinder guard (if so equipped) to the stabilizer leg as shown in Figure 3D-111.

3. Install the tube to the rod end post. Install tube clamp with adjusting screw on top of the cylinder. Install the cylinder guard strap, if required.

4. Connect the hoses. Hose from closed end of cylinder connects to the top ("A") port of the control valve.

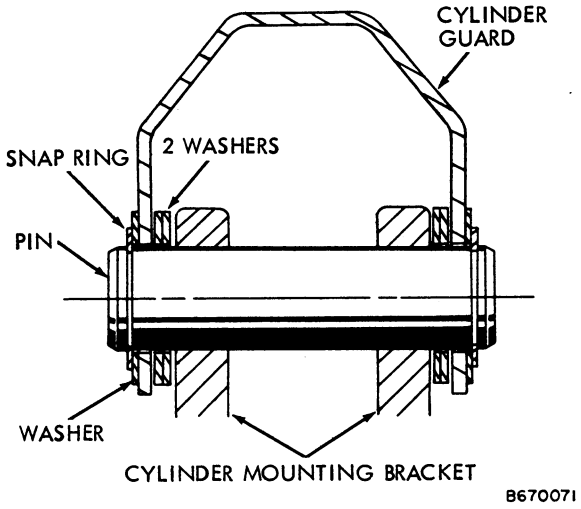

Figure 3D-111 - Installing Cylinder Guard