RUTHZIL TRATOR COMERCIAL DE PEÇAS LTDA 11 97083-6812 ROLANDO CITRANGULO

KOMATSU

WA200-5

KEPB001502

PARTS BOOK

WA200-5

Serial No. B10001 and up

ENGINE SAA6D102E-2EE-8

Engine No. 26340280 and up

FOREWORD

When ordering a spare part, specify the part number, part name, and quantity required, and also specify your machine model code, machine serial number, engine serial number and the service meter reading.

This Parts Book describes not only standard items but also optional equipment and attachments. To order a part, please contact your nearest Komatsu distributor.

This Parts Book contains the information and special symbols as follows:

Figure and list

When you open this Parts Book, you will find an illustration on the left page (even-numbered page) for the spare parts group. Each individual part in the group is given an index number.
On the right page, the component parts of the group are listed in the order of the index numbers shown on the illustration page. The part number, part name, and applicable machine serial number are given for each part.

FIG. No.

The FIG. No. is the number of the illustration shown on the page. It is not the spare part number. The numbers are not always continuous.

INDEX

This is the same as the index number in the illustration. The parts are listed in index number order.

PART No.

The number given in the PART No. column is the part number for the part shown. It is the code used when ordering that part. It is important that there be no mistake in this code number when ordering.

DESCRIP-TION

This gives the name of part that has the part number listed. The mark "." is put in front of the part name of an assembly part and the item is entered following the assembly. If a part marked with "." is a sub assembly, its components are marked with "..".

Example:
```
ELEMENT ASSEMBLY, AIR CLEANER
.ELEMENT ASSEMBLY, OUTER
..ELEMENT, OUTER
..NUT, WING
..WASHER
```

Q'TY (Quantity)

This specifies the number of pieces used for one machine. However, if a part is included in the assembly and/or component, the quantity per such assembly and/or component is specified.

SERIAL No.

Applicable engine serial number is indicated for the engine volume. In the chassis volume, this indicates the machine serial number in which the part is used.

Symbols and codes

Symbols and codes are used in the PART No. and DESCRIPTION columns, and represent the following:

☐	The part specified in the line above can be used instead of this part.

Symbols and codes (Cont'd)

⊡	This part can be used instead of the part specified in the line immediately above.
◆	This part and the part specified in the line immediately above are interchangeable.
■	The part specified in the DESCRIPTION column can be used instead of this part if it is used as a set.
☒	This shows discontinued part. The part specified in the above line is supplied instead.
▼	This shows a discontinued part. The part specified in the DESCRIPTION column is supplied instead as a set.
☆	This part cannot be supplied as an individual part. It is supplied as an assembly.
★	This part cannot be supplied as an individual part. It is supplied as an assembly. However, it is supplied as an individual part by authorized distributors only.
⊙	This indicates a part group. The part marked with this symbol is not considered a supply part.
====	The parts surrounded by this line are components of the part group specified in the above line.
G-1,G-2	These indicate categories of part groups.
KIT	This indicates kit parts. For kit parts, refer to the service kit tables provided in this Parts Book.
△	This indicates a part supplied as semi-finished. It requires additional work before installation.
PAINT(1)	This indicates parts shipped painted with undercoat.
PAINT(2)	This indicates parts supplied with different colors from the original color of your machine.
(A)	This code indicates special parts for cold weather "A" specification (-30°C) machines.
(B)	This indicates special parts for cold weather "B" specification (-50°C) machines.

AVANT-PROPOS

Lorsque vous passez une commande d'une ou plusieurs pièces détachées, vous êtes prié de spécifier, outre le ou les numéro(s), désignation(s) et quantité(s) des pièces commandée(s), le numéro de carrosserie, le numéro de série du moteur et la lecture du compteur de service du véhicule.

Sur le présent catalogue des pièces figurent non seulement les équipements standard, mais également les équipements et accessoires en option. Si vous désirez un équipement ou une pièce quelconque, vous êtes prié de prendre contact avec le concessionnaire Komatsu le plus proche.

Ce catalogue des pièces se présente de la manière suivante:

Figures et listes	Lorsque vous ouvrez le présent catalogue, vous trouvez: sur la page de gauche (numéro de page pair), les illustrations de toutes les pièces composant l'équipement en question avec les numéros de référence pour chacune des pièces, sur la page de droite (numéro de page impair), la liste des pièces dans l'ordre des numéro de référence des pièces avec indication du numéro des pièces, de la désignation des pièces, de la quantité utilisée et des numéros de série.
FIG. No. (Figure et liste)	Le numéro de figure (FIG. XX) correspond au numéro de la figure représentée sur cette page, mais ne correspond pas au numéro de la pièce détachée. Veuillez noter que les numéros de figure ne se suivent pas systématiquement.
INDEX (Numéros de référence)	Les numéros de référence correspondent aux numéros de référence notés sur la figure et sont énumérés dans l'ordre des numéros de référence.
PART No. (Numéros de pièce)	Les numéros indiqués dans cette colonne correspondent aux numéros des pièces représentées et constituent les codes à spécifier pour toute commande de pièce. Il est important de ne pas faire d'erreur avec ce code au moment de la commande.
DESCRIP-TION (Descript-ion)	Dans cette colonne est indiquée la désignation des différentes pièces. Dans le cas d'un ensemble constitué de pièces, la désignation de chacune de ces pièces est précédée d'un point "." et dans le cas d'un ensemble constitué de sous-ensembles eux-mêmes constitués de pièces, la désignation de chacune de ces pièces est précédée de deux points "..". Exemple: ELEMENT ASSEMBLY, AIR CLEANER .ELEMENT ASSEMBLY, OUTER ..ELEMENT, OUTER ..NUT, WING ..WASHER
Q'TY (Quantité)	Dans cette colonne est indiqué le nombre de pièces nécessaires pour l'équipement en question. S'il s'agit de pièces comprises dans un ensemble et/ou composant, et la quantité indiquée est le nombre de pièces nécessaires pour l'ensemble et/ou le composant en question.
SERIAL No. (Numéros de série)	S'il s'agit d'un élément du moteur, ces numéros sont les numéros de série des moteurs sur lesquels cette pièce est utilisée. S'il s'agit d'un élément de la carrosserie, ces numéros sont les numéros des carrosseries sur lesquelles la pièce en question est utilisée.

Codification

Les codes indiqués dans les colonnes "N° de pièce" et "Description" ont les significations suivantes:

□	Au lieu de la pièce affectée de ce code, il est possible d'utiliser la pièce qui figure juste au-dessus.
⊡	La pièce affectée de ce code peut être utilisée à la place de la pièce figurant juste au-dessus.
◆	La pièce affectée de ce code et la pièce figurant dans la ligne justeau-dessus sont interchangeables
☒	Au lieu de la pièce affectée de ce code, il est possible d'utiliser la combinaison des pièces indiquées dans la colonne "Description".
■	Les pièces affectées de ce code ne sont plus fournies. Au lieu de cette pièce, c'est la pièce figurant dans la ligne justeau-dessus qui sera fournie.
▼	Les pièces affectées de ce code ne sont plus fournies. Au lieu de cette pièce, c'est la combinaison de pièces figurant dans la colonne "Description" qui sera fournie.
☆	Les pièces affectées de ce code ne seront pas fournies à l'unité mais par jeu de pièces.
★	Les pièces affectées de ce code ne seront pas fournies à l'unité mais par jeu de pièces, sauf dans le cas de certains concessionnaires Komatsu.
⊙	Ce code indique qu'il s'agit d'un groupe de pièces. Les pièces affectées de ce code ne sont pas fournies en tant que pièces détachées.
= = = =	Les pièces ainsi encadrées sont les pièces composantes du groupe de pièces indiqué dans la ligne d'au-dessus.
G-1, G-2	Indique le numéro du groupe de pièces
KIT	Indique qu'il s'agit d'un kit de pièces. Pour les pièces composantes des kits, veuillez vous reporter à la liste des kits de service.
△	Indique qu'il s'agit de pièces fournies à l'état semi-fini. Ces pièces devront être usinées avant l'installation.
PAINT(1)	Indique que sur les pièces fournies est appliquée uniquement une couche primaire.
PAINT(2)	Indique que la couleur de la peinture est différente de celle d'origine.
(A)	Indique qu'il s'agit de pièces pour spécifications artiques A (–30°C)
(B)	Indique qu'il s'agit de pièces pour spécifications artiques B (–50°C)

VORWORT

Bei der Bestellung von Teilen bitte die Teilenummer, die Teilebezeichnung und die Menge des jeweiligen Teils sowie die Modellnummer, die Seriennummer der Maschine, die Seriennummer des Motors und den Stand des Betriebsstundenzählers angeben.

In dieser Ersatzteilliste ist nicht nur das Standardzubehör aufgeführt, sondern auch als Sonderausstattung erhältliche Teile und Einrichtungen.

Bestellungen nimmt Ihr zuständiger Komatsu-Händler entgegen.

Die folgenden Angaben sind in der Ersatzteilliste aufgeführt.

Bild und Liste	Beim Aufschlagen des Ersatzteilkatalogs ist auf der linken Seite (d.h. der Seite mit der geraden Zahl) eine Darstellung der Bauteile der betreffenden Baugruppe zu finden. Jedes Einzelteil der Baugruppe ist mit einer Kennzahl versehen. Auf der rechten Seite (d.h. der Seite mit der ungeraden Zahl) sind die Bauteile der Baugruppe, geordnet nach den auf der linken Seite angegebenen Kennzahlen, aufgeführt. Jedes Einzelteil wird mit Teilenummer, Teilebezeichnung und entsprechender Seriennummer angegeben.
FIG. No. (Bildnummer)	Die Bildnummer entspricht der Nummer des auf der betreffenden Seite stehenden Bilds. Es handelt sich dabei nicht um die Nummer des Lieferteils. Es sei ferner erwähnt, daß die Bilder nicht fortlaufend numeriert sind.
INDEX (Kennzahl)	Dabei handelt es sich um die gleiche Zahl wie die Kennzahl im Bild. Die Teile sind geordnet nach der Kennzahl aufgeführt.
PART No. (Teilenummer)	Die in der Spalte "Teilenummer" aufgeführte Nummer entspricht der Teilenummer für das betreffende Teil. Diese Nummer dient zur Bestellung des Teils. Deshalb bei der Bestellung stets auf die genaue Angabe der Teilenummer achten.
DESCRIPTION (Beschreibung)	Hierunter wird die Bezeichnung des Teils mit der aufgeführten Teilenummer angegeben. Jedes Baugruppen-Bauteil ist mit dem vorangestellten Symbol "." gekennzeichnet und wird hinter der entsprechenden Baugruppe aufgeführt. Handelt es sich bei dem mit "." gekennzeichneten Bauteil um eine Baugruppe, sind die Bauteile dieser Baugruppe mit ".." gekennzeichnet. Beispiel: Element assembly, air cleaner . Element assembly, outer .. Element, outer .. Nut, wing .. Washer
QTY (Menge)	Hierunter wird die Anzahl der Bauteile für eine Maschine angegeben. Im Falle einer Baugruppe oder eines Aggregats wird allerdings die Anzahl der Teile pro Baugruppe angegeben.
SERIAL No. (Seriennummer)	Im Ersatzteilkatalog für den Motor versteht man hierunter die Seriennummer des Motors, in den das betreffende Teil eingebaut ist. Im Ersatzteilkatalog für die Maschine versteht man hierunter die Seriennummer der Maschine, in die das entsprechende Teil eingebaut ist.
Kodes	Die in den Spalten "Teile-Nr." und "Beschreibung" verwendeten Kodes haben folgende Bedeutung: □ Anstelle dieses Teils kann das in der vorangegangenen Zeile aufgeführte Teil verwendet werden.

⊡	Dieses Teil kann anstelle des in der vorangegangenen Zeile aufgeführten Teils verwendet werden.
◆	Dieses Teil ist mit dem in der vorangegangenen Zeile aufgeführten Teil austauschbar.
■	Anstelle dieses Teils kann das in der Spalte "Beschreibung" aufgeführte Teil verwendet werden, wenn das Teil zusammen mit anderen Teilen als ein Bauteilsatz verwendet wird.
⊠	Dieses Teil kann nicht mehr geliefert werden. Statt dessen wird das in der vorangegangenen Zeile aufgeführte Teil geliefert.
▼	Dieses Teil kann nicht mehr geliefert werden. Statt dessen wird das in der Spalte "Beschreibung" aufgeführte Teil als ein Bauteilsatz geliefert.
☆	Dieses Teil kann nicht als Einzelteil, sondern nur als Baugruppe geliefert werden.
★	Dieses Teil kann nicht als Einzelteil, sondern nur als Baugruppe geliefert werden. Nur bei bestimmten Händlern kann es als Einzelteil bezogen werden.
⊙	Hierdurch wird ein Aggregat gekennzeichnet. Es wird nicht zu den Lieferteilen gerechnet.
= = = =	Die Teile innerhalb dieser Markierung gehören zu dem oben aufgeführten Aggregat.
G-1, G-2	Hiermit wird die Kategorie eines Aggregats angegeben.
KIT	Hiermit werden Teile gekennzeichnet, die nur als Satz erhältlich sind. Siehe dazu die Tabelle der als Satz gelieferten Ersatzteile.
△	Hiermit werden Teile gekennzeichnet, die in vorbearbeitetem Zustand geliefert werden und für den Einbau nachbearbeitet werden müssen.
PAINT(1)	Hiermit werden Teile gekennzeichnet, die mit Grundierung geliefert werden.
PAINT(2)	Hiermit werden Teile gekennzeichnet, die in unterschiedlichen Farben geliefert werden.
(A)	Hiermit werden Teile gekennzeichnet, die speziell für kalte Witterung (A) (-30°C) ausgelegt sind.
(B)	Hiermit werden Teile gekennzeichnet, die speziell für kalte Witterung (B) (-50°C) ausgelegt sind.

PROLOGO

Cuando tenga que efectuar un pedido de repuestos, se ruega especificar el número, el nombre y la cantidad de piezas requeridas, indicando asimismo el número de modelo, el número de serie del motor y la lectura del contador de servicio.

Esta lista de piezas especifica no solamente accesorios estándar sino también piezas y accesorios opcionales. Para realizar un pedido, sírvase ponerse en contacto con su distribuidor Komatsu más cercano.

La lista de repuestos se compone de los elementos siguientes.

Figura y lista	Al abrir esta lista de repuestos, encontrará en la página izquierda (página de número impar) una ilustración de los componentes del conjunto. La figura de cada componente individual va provista de un número de índice. En la página derecha (página de número par), los componentes del conjunto están listados siguiendo el orden de los números de índice de la página izquierda.
FIG. NO. (Número de figura)	El número de figura es el número indicado en cada una de las respectivas figuras, y no es el número de la pieza. Los números de figura no son siempre continuos.
INDEX (Número de índice)	Coincide con el número de índice de cada figura, y aparecen en la lista en orden numérico.
PART NO. (Número de pieza)	El número indicado en la columna de "Número de piezas" es el número de pieza que aparece en la figura. Es sumamente importante debido a que se utiliza como código al efectuar el pedido de piezas.
DESCRIP-TION (Nombre de las piezas)	Indica la descripción correspondiente a cada número de pieza. Los componentes de un conjunto llevan la marca "." antes del nombre. Por otra parte, cuando se tratan de piezas armadas, llevan la marca ".." antes del nombre Ejemplo: ELEMENT ASSEMBLY, AIR CLEANER .ELEMENT ASSEMBLY, OUTER ..ELEMENT, OUTER ..NUT, WING ..WASHER
Q'ty (Cantidad)	Especifica el número de piezas utilizadas en cada máquina. Sin embargo, para un conjunto o componentes de un grupo de piezas, se especifica el número de piezas por conjunto.
SERIAL NO. (Número de serie)	En el manual de piezas del motor, indica el número de serie del motor en que se utiliza la pieza. En el manual de piezas de la máquina, indica el número de serie del vehículo en que se utiliza esa pieza.

Códigos	Los códigos y números de piezas especificados en las columnas "N°. de pieza" y "Nombre de la pieza" representan lo siguiente:
□	En lugar de esta pieza es posible utilizar la pieza indicada en el renglón de arriba.
⊡	Es posible utilizar esta pieza en lugar de la indicada en el renglón inmediatamente anterior.
◆	Esta pieza y la indicada en el renglón inmediatamente anterior son intercambiables.
■	Es posible utilizar la pieza especificada en la columna "Nombre de las piezas" si se utiliza como un conjunto.
☒	Esta pieza se ha dejado de suministrar. En su lugar, se suministra la pieza indicada en el renglón anterior.
▼	Esta pieza se ha dejado de suministrar. En su lugar, se suministra la pieza especificada en la columna "Nombre de las piezas" como un conjunto.
☆	Esta pieza no se suministra como pieza individual. Se suministra como un conjunto.
★	Esta pieza no se suministra como pieza individual. Se suministra como un conjunto. Sin embargo, es suministrada como pieza individual por ciertos distribuidores.
⊙	Indica grupo de piezas. Las piezas que llevan este código no son suministrables.
====	Las piezas rodeadas por esta línea son componentes del grupo de piezas especificado arriba.
G-1, G-2	Indica la clasificación del grupo de piezas.
KIT	Indica componentes de un juego. Para los componentes de un juego, refiérase a la tabla de los juegos de servicio.
Δ	Indica pieza suministrada como semiterminada. Debe ser reelaborada antes del uso.
PAINT(1)	Indica piezas despachadas con una primera mano de pintura.
PAINT(2)	Indica piezas despachadas con colores diferentes.
(A)	Indica piezas especiales (A) especificadas para climas fríos (-30°C).
(B)	Indica piezas especiales (B) especificadas para climas fríos (-50°C)

INTRODUÇÃO

Ao solicitar uma peça, informe o número, nome e quantidade da peça necessária, bem como o número da carroçaria, número do motor, e leitura do medidor de serviço.

Esta lista de peças não somente especifica os acessórios padrões mas também as peças opcionais e aditamentos. Para pedir uma peça, entre em contato com o revendedor Komatsu mais próximo.

Este livro de peças consiste nos seguintes itens.

Figura e lista	Ao abrir este livro de peças, você encontrará na página esquerda (a página com número par), uma ilustração das peças componentes do conjunto. Cada peça individual no conjunto tem um número de índice. Na página direita (a página com número ímpar), as peças componentes do conjunto são relacionadas na ordem dos números de índice mostrados na página esquerda. Cada peça é designada com um número, nome, e número de série aplicável.
FIG. NO. (Número da figura)	O número da figura é o número da figura mostrada em tal página. Ele não é um número para fornecimento da peça. Do mesmo modo, os números das figuras nem sempre são contínuos.
INDEX (Número de índice)	Este número é igual ao número de índice na figura. As peças são relacionadas na ordem dos números de índice.
PART NO. (Número de peça)	O número designado na coluna "Número da peça" é o número para a peça mostrada. Ele é o código usado para o pedido da peça. É importante que não haja equívoco com respeito a este número ao pedir uma peça.
DESCRIP-TION (Descrição)	Este item descreve o nome da peça que tem o número de peça relacionado. É colocado um "." na frente do nome de um componente de conjunto e o item é introduzido após o conjunto. Se uma peça marcada com "." é um conjunto, seus componentes são marcados com "..". Exemplo: ELEMENT ASSEMBLY, AIR CLEANER .ELEMENT ASSEMBLY, OUTER ..ELEMENT, OUTER ..NUT, WING ..WASHER
Q'ty (Quantidade)	Este item especifica o número de peças usadas para 1 máquina. No entanto, para o conjunto ou componentes de um grupo de peças, o número de peças por conjunto é especificado.
SERIAL NO. (Número de série)	No livro de peças do motor, esse número indica o número de série do motor no qual a peça é usada. No livro de peças da máquina, esse número indica o número de série da máquina na qual a peça é usada.
Códigos	Os códigos e número de peça especificados nas colunas "N.º de peça" e "Descrição" representam o seguinte: □ A peça especificada na linha acima pode ser usada no lugar desta peça.

⊡	Esta peça pode ser usada no lugar da peça especificada na linha imediatamente acima.
◆	Esta peça e a peça especificada na linha imediatamente acima são intercambiáveis.
■	A peça especificada na coluna "Descrição" pode ser usada no lugar desta peça se ela for usada como um jogo.
☒	Esta peça não é mais fornecida. A peça especificada na linha acima é fornecida em seu lugar.
▼	Esta peça não é mais fornecida. A peça especificada na coluna "Descrição" é fornecida em seu lugar como um jogo.
☆	Esta peça não pode ser fornecida como uma peça individual. Ela é fornecida como um conjunto.
★	Esta peça não pode ser fornecida como uma peça individual. Ela é fornecida como um conjunto. No entanto, ela é fornecida como uma peça individual somente por revendedores específicos.
⊙	Isso indica um grupo de peças. Esta peça não é considerada uma peça de fornecimento.
====	As peças envolvidas por esta linha são componentes do grupo de peças especificado acima.
G-1, G-2	Isso indica a categoria do grupo de peças.
KIT	Isso indica componentes de um kit. Para os componentes de um kit, refira-se à tabela de kits de serviço.
Δ	Isso indica uma peça fornecida como produto semi-acabado. Ela deve ser reformada antes do uso.
PAINT(1)	Isso indica peças embarcadas pintadas com uma primeira mão de fundo.
PAINT(2)	Isso indica peças embarcadas com cores diferentes.
(A)	Isso indica peças especiais para especificação (A) de tempo frio (-30°C).
(B)	Isso indica peças especiais para especificação (B) de tempo frio (-50°C).

مقدمة

عند طلب القطع، يرجى تحديد رقم القطعة واسم القطعة والكمية المطلوبة من القطعة، مع تحديد رقم الموديل والرقم التسلسلي للمحرك وقراءة عداد الخدمة.

قائمة القطع هذه لا تقتصر على الكماليات القياسية فقط بل تشمل ايضاً القطع والملحقات الاختيارية. لطلب القطع، يرجى الاتصال بأقرب موزع لمنتجات كوماتسو.

قائمة القطع تتضمن البنود التالية.

الشكل والقائمة
عندما تفتح كتاب القطع، ستجد على الصفحة اليسرى (الصفحة ذات الرقم الزوجي) شكلاً توضيحياً للقطع المكونة للمجموعة. كل قطعة في مجموعة المكونات لها رقم فهرس.
على الصفحة اليمنى (الصفحة ذات الرقم الفردي) تم إدراج قائمة بالقطع التي تتكون منها المجموعة مرتبة حسب ارقام الفهرس المبيّنة في الصفحة اليسرى. وقد اعطيت كل قطعة من القطع رقم قطعة واسم قطعة ورقم تسلسلي ينطبق عليها.

FIG. No. (رقم الشكل)
رقم الشكل هو الرقم الخاص بالشكل التوضيحي الذي يظهر في تلك الصفحة. وهو ليس رقم القطعة التي يتم توريدها. كما ان ارقام الاشكال ليست دائماً متتابعة.

INDEX (رقم الفهرس)
هذا الرقم هو نفس رقم الفهرس الوارد في الشكل التوضيحي. تدرج القطع في القائمة مرتبة تبعاً لارقام الفهرس.

PART No. (رقم القطعة)
الرقم الوارد في عمود « رقم القطعة » هو رقم القطعة الخاص بالقطعة المبيّنة. وهو الرمز المستخدم لطلب تلك القطعة. ومن الضروري عدم ارتكاب اي خطأ في تحديد هذا الرقم عند طلب القطع.

DESCRIPTION (الوصف)
يعطي اسم القطعة المدرج رقمها في القائمة.
توضع العلامة " . " امام اسماء القطع المكونة للمجموعة ويدرج البند بعد المجموعة. اذا كانت القطعة المشار اليها بالعلامة " . " هي نفسها عبارة عن مجموعة مكونات فان كلاً من مكوناتها يشار اليها بالعلامة " .. ".
مثال :
ELEMENT ASSEMBLY, AIR CLEANER
.ELEMENT ASSEMBLY, OUTER
.. ELEMENT, OUTER
..NUT, WING
..WASHER

Q'ty (الكمية)
هذا هو عدد القطع المستخدمة لآلية واحدة. أما بالنسبة لمجموعات المكونات ومجموعات القطع فانه يتم تحديد عدد القطع لكل مجموعة.

SERIAL No. (الرقم التسلسلي)
في كتاب قطع المحرك، يشير هذا الرقم الى الرقم التسلسلي للمحرك الذي تستخدم فيه القطعة. في كتاب قطع الآلية، يشير هذا الرقم الى الرقم التسلسلي للآلية التي تستخدم فيها القطعة.

الرموز وارقام القطع المذكورة في عمود « رقم القطعة » وعمود « الوصف » تمثل كما يلي:

□ القطعة المذكورة في السطر السابق يمكن استعمالها بدلاً من هذه القطعة.

⊡ هذه القطعة يمكن استعمالها بدلاً من القطعة المذكورة في السطر السابق مباشرة.

◆ هذه القطعة والقطعة المذكورة في السطر السابق مباشرة يمكن لكل منهما ان تحل محل الاخرى.

■ القطعة المذكورة في عمود « الوصف » يمكن استعمالها بدلاً من هذه القطعة اذا استخدمت كطقم.

⊠ هذه القطعة توقف توريدها. يتم توريد القطعة المذكورة في السطر السابق بدلاً منها.

▼ هذه القطعة توقف توريدها. يتم توريد القطعة المذكورة في عمود « الوصف » بدلاً منها كطقم.

☆ هذه القطعة لا يمكن توريدها كقطعة منفردة. يتم توريدها كمجموعة.

★ هذه القطعة لا يمكن توريدها كقطعة منفردة. يتم توريدها كمجموعة. على انه يتم توريدها كقطعة منفردة من قبل موزعين معيّنين فقط.

⊙ هذا يشير الى مجموعة قطع.
هذه القطعة لا تعتبر قطعة للتوريد.

---- القطع المحاطة بهذا الخط هي مكونات لمجموعة القطع المذكورة اعلاه.

G-1,G-2 هذا يشير الى فئة مجموعة القطع.

KIT هذا يشير الى مكونات الاطقم التركيبية. بخصوص الاطقم التركيبية، يرجى مراجعة جدول الاطقم التركيبية للخدمة.

△ هذا يشير الى قطعة مورّدة شبه مكتملة التصنيع. تتطلب استكمال تصنيعها قبل الاستعمال.

PAINT(1) هذا يشير الى القطع المشحونة بعد طلائها بطبقة سفلية.
PAINT(2) هذا يشير الى القطع المشحونة بألوان مختلفة.

(A) هذا يشير الى قطع خاصة بمواصفات الطقس البارد من الفئة (A) (-٣٠°م).
(B) هذا يشير الى قطع خاصة بمواصفات الطقس البارد من الفئة (B) (-٥٠°م).

ПРЕДИСЛОВИЕ

При формировании заказа на детали, узлы и агрегаты, кроме их номера детали, наименования и количества, завод-изготовитель просит заказчиков информировать о серийном номере машины и двигателя, для которых делается заказ, а также показании счетчика мото-часов.

В Каталоге приведены не только стандартные агрегаты, но и дополнительные устройства и принадлежности, поставляемые по специальному заказу. При необходимости приобретении их обратиться к местному дилеру фирмы "Комацу".

Каталог деталей составлен, как ниже изложено:

Рисунки и таблицы деталей

При открытии Каталога на левой странице (чётной) приведен рисунок деталей устройства или агрегата. Каждая деталь обозначена номером позиции.
На правой странице (нечётной) приведена таблица деталей, нарисованных на левой странице, с соответствующим номером детали, наименованием, количеством и серийными номерами машины, для которых предназначена данная деталь, в порядке возрастания номеров позиции.

FIG No. (№ рисунка)

Номер рисунка (фиг.) является собственным для данного рисунка и не является номером показанной детали. Номера рисунков (фиг.) могут быть непорядковыми.

INDEX (Указатель)

В указателе приведены номера позиции деталей на рисунке в порядке возрастания цифр.

PART No. (Номер детали)

При заказе на деталь, установленную на рисунке, следует указать номер, приведенный в данной колонне. Именно этот номер определяет каждую деталь.

DESCRIPTION (Наименование детали)

Приведено наименование детали, соответствующей выбранному номеру детали. Точка "." поставлена перед наименованием каждой составной части устройства. Если составная часть состоит из множества деталей, то эти детали обозначаются двумя точками "..".
Например:
ELEMENT ASSEMBLY, AIR CLEANER
. ELEMENT ASSEMBLY, OUTER
.. ELEMENT, OUTER
.. NUT, WING
.. WASHER

Q'TY (Количество)

Указано количество деталей, необходимое на единицу данного устройства. Для деталей составной части устройства, а также для группы деталей указано их количество на единицу составной части или на группу.

SERIAL No. (Серийные номера)

В части двигателя приведены серийные номера двигателей, а в части шасси — серийные номера машин, в которых применена данная деталь.

Условные обозначения

Условные обозначения, применяемые в колоннах "Номер детали" и "Наименование детали", характеризуют следующее:

- □ Вышеприведенная деталь может заменить настоящую деталь.

Условные обозначения (Продолжение)

- ◉ Настоящая деталь может заменить деталь, приведенную на одну строчку выше.
- ◆ Настоящая деталь и деталь, приведенную на одну строчку выше, имеют взаимозаменяемость.
- ■ Взамен настоящей детали возможно использовать детали, приведенные в колонне "Наименование детали", в комплекте.
- □ Поставка этой детали прекращена. Взамен этой детали поставляется деталь, приведенная на одну строчку выше.
- ▼ Поставка этой детали прекращена. Взамен этой детали поставляются детали, приведенные в колонне "Наименование детали", в комплекте.
- ☆ Настоящая деталь поставляется только в комплекте, а не в отдельности.
- ★ Настоящая деталь поставляется, как правило, только в комплекте, а не в отдельности. Ее можно достать только у отдельных дилеров фирмы "Комацу".
- ◉ Группа деталей. Детали не подлежат дополнительной поставке.
- ------ Детали, ограниченные этой линией, составляют вышеприведенную группу деталей.
- G-1, G-2 Обозначения, характеризующие отдельные группы деталей.
- KIT Составляющая комплекта. См. таблицы ремонтных комплектов.
- △ Деталь, поставляемая в неготовом виде. Перед употреблением необходимо дополнительно обработать.
- PAINT(1) Детали, отгружаемые в загрунтованном виде.
- PAINT(2) Детали, отгружаемые в окрашенном в другой цвет виде.
- (A) Детали, рассчитанные на холодные районы (-30° C)
- (B) Детали, рассчитанные на особо холодные районы (-50° C)

前　言

订购零件时，请注明需要零件的货号、品名、数量以及使用机器的车辆编号、发动机型号和系列号、工作时数。

此零件明细表上不仅记载有标准装备零件，还记载有选购零件、附件零件。如果您需要订货，请与最近的小松代理店联系。

为了清楚明了，零件手册中有如下规定:

图　　表	打开此零件清单后， 在左侧的页上（偶数页）用图示表示按安装的装置上的零件。在图示上标有各种零件的索引号码。 在右侧的页上（奇数页）按照左侧图示上表示的零件索引号码以表格的形式 表示货号、品名、数量、适用机型。
FIG. No.	图号（FIG.）表示该页图的号码，它不时补充零件用的货号. 同时，此号码不一定是连续号码。
INDEX	与图的索引号码一致，按索引号码顺序编制为表格形式。
PART No.	此栏所示的货号是图示零件的货号，它是在订货时需要的标明的特定代号，是非常重要的。
DESCRIP-TION	它表示相当于货号的零件名称。 构成组装品的零件，在品名的前面有标记，记载在组装品之后。 另外，如果标记的零件是组装品，在该构成零件的品名前标有 .. 标记。 例如: ELEMENT ASSEMBLY, AIR CLEANER .ELEMENT ASSEMBLY, OUTER ..ELEMENT, OUTER ..NUT, WING ..WASHER
Q'TY	表示 1 台机器中需要使用的该零件数量。 但是，如果是组装零件和零件组的构成零件时，表示其组装件的件数。
SERIAL No.	发动机篇中表示该使用零件的发动机型号，在机体篇中表示该使用零件的车辆号码。
代　　号	货号栏和零件品名栏里的代号如下所示: □　　上一行的零件可取代此行零件来使用。

代　　号（续）

⊡	此行零件可代替紧接着的上一行零件使用。
◆	此行零件可与紧挨着的上一行零件互换使用。
■	如果将此行零件说明栏内的零件配套后，可取代此零件来使用。
⊠	该行零件已停止供应，用上一行的零件代替使用。
▼	此行零件已停止供应，将此行零件说明栏内的零件配套后代替此零件供应。
☆	此行零件拟成套供应，不以单一零件供应。
★	此行零件拟成套供应，不以单一零件供应，但特定代理除外。
⊙	成组零件，一般不考虑成组供应。
====	用这种符号包括的零件是符号上一行指明成组件的零部件。
G-1,G-2	成组零件编号。
KIT	修理包，关于修理包构件详情，请参考技术服务修理包资料。
△	此行零件以半成品的形式供应，使用前必须再加工。
PAINT(1)	只涂底漆装船。
PAINT(2)	和本体不同颜色装船。
(A)	适用寒冷地区。（－30℃）
(B)	适用极寒冷地区。（－50℃）

CONTENTS

CONTENTS

FOREWORD ..... OF- 2
CONTENTS ..... OC- 2

	FIG. NO	PAGE
AA [ENGINE]		
CYLINDER HEAD	A1009-01A4	030010
WATER TEMPERATURE SENSOR (#263023123-)	A1010-01B5	030020
WATER TEMPERATURE SENSOR (EXTREME COLD TERRAIN SPEC.) (#26317773-)	A1010-01D0	030030
FRONT RANGER (#26302312-)	A1030-01A1Z	030040
REAR HANGER (#26302312-)	A1050-01A0	030050
HEAD COVER (#26302312-)	A111P-01A3	030060
AIR CONNECTOR (#26302312-)	A131P-01A8	030070
AIR INTAKE HEATER	A131R-01A0	030080
AIR INTAKE COVER	A131V-01A0	030090
AIR CLEANER (#26319077-)	A1410-01D3	030100
EXHAUST CONNECTOR CLAMP	A151R-01A0	030110
EXHAUST MANIFEST GASKET AND BOLT	A151T-01A2	030120
EXHAUST MANIFOLD (#26302312-)	A151V-01A2	030130
TURBOCHARGER OIL PIPING (#26320577-)	A153T-01C6	030140
TURBOCHARGER OUT CONNECTION	A153V-01A0	030150
TURBOCHARGER MOUNTING (#26302312-)	A1539-01b8	030160
HEAT SHIELD (#26304458-)	A1570-01E7	030170
MUFFLER AND MOUNTING (#26304458-)	A1610-01H6	030180
THERMOSTAT HOUSING	A173P-01B1	030190
THERMOSTAT(#26295864-)	A173R-01A0	030200
OIL PRESSURE SWITCH (#26302312-)	A201V-01A2Z	030210
CYLINDER BLOCK	A2019-01A2	030220
DUST SEAL (#26277757-)	A204R-01A0	030230
FRONT COVER	A2049-01A1	030240
CAMFOLLOWER COVER	A206P-01A7	030250
BREATHER HOSE (#26302312-)	A2060-01B5	030260
CYLINDER BLOCK COVER (OIL FILLER AND BRACKET) (#26302312-)	A207S-01A0	030270
OIL PAN BOLT (#26302312-)	A211R-01A2	030280
OIL PAN BOLT (COLD TERRAIN SPEC.) (#26339177-)	A211R-01A6	030290
OIL PAN HEATER (COLD TERRAIN SPEC.) (#26339177-)	A211S-01A0	030300
FLUID LEVEL SENSOR (WITHOUT OIL LEVER SENSOR) (#26302312-)	A211V-01A2Z	030310
OIL PAN AND SUCTION TUBE (#26302312-)	A2119-01B7	030320
OIL LEVER GAUGE (#26302312-)	A219P-01A6	030330
FLYWHEEL HOUSING (#26302312-)	A2219-01B4	030340
FLYWHEEL (#26302312-)	A223P-01C0	030350
CRANKSHAFT	A2319-01A0	030360
DAMPER	A233P-01A0	030370
PISTON	A2359-01A2	030380
ROCKER ARM	A241P-01A0	030390
TAPPET	A241R-01A0	030400
CAMSHAFT	A2419-01A0	030410
FRONT GEAR TRAIN COVER	A261P-01A1	030420
FAN PULLEY	A267P-01A2Z	030430
TACHOMETER DRIVE COVER	A281P-01A0	030440
TACHOMETER ADAPTER (#26314444-)	A281P-01A1	030450
UNDER PLATE	A283P-01A0	030460
OIL PUMP	A301P-01A2	030470
OIL COOLER AND OIL FILDER (#26302312-)	A331P-01B2	030480
BLOCK HEATER (COLD TERRAIN SPEC.) (#26339177-)	A337P-01A0	030490
FUEL INJECTION PUMP (#26316011-)	A401P-01H8	030500
FUEL INJECTION PUMP (1/2) (INNER PARTS) (#26316011-)	A401P-02H8	030510
FUEL INJECTION PUMP (2/2) (INNER PARTS) (#26316011-)	A401P-03H8	030520
FUEL INJECTION PUMP (GOVERNOR) (1/3) (INNER PARTS) (#26316011-)	A401P-04H8	030530
FUEL INJECTION PUMP (GOVERNOR) (2/3) (INNER PARTS) (#26366011-)	A401P-05H8	030540

	FIG. NO	PAGE
FUEL INJECTION PUMP(GOVERNOR) (3/3)		
(INNER PARTS) (#26316011-)	A401P-06H8	030550
FUEL INJECTION PUMP (FEED PUMP)		
(INNER PARTS) (#26316011-)	A401P-07H8	030560
BOOST TUBE	A401R-01B2	030570
FUEL INLET AND OUTLET JOINT CAP	A4010-01B0Z	030580
FUEL INJECTION PUMP MOUNTING (#26302312-)	A408P-01B0	030590
FUEL INJECTION PUMP MOUNTING		
(FOR TACHOMETER) (#26315342-)	A408P-01B1	030600
FUEL FILTER (#26302312-)	A411P-01A0	030610
FUEL FILTER PIPING (#36302312-)	A411R-01A7	030620
FUEL PIPING (#26302312-)	A411S-01C0	030630
CYLINDER BLOCK BLIND COVER AND PIPING		
(#26302312-)	A417P-01B4	030640
INJECTION NOZZLE (#26316011-)	A4219-01B1	030650
FUEL JOINT	A423V-01A0Z	030660
FUEL RETURN RELATED (#26302312-)	A4230-01A8	030670
STOP SOLENOID (#26302312-)	A4510-01A5	030680
WATER PUMP (#26302312-)	A501P-01A3	030690
WATER CONNECTOR (#26300902-)	A501R-01A0	030700
WATER CONNECTOR PLUG (#26277757-)	A501S-01A0	030710
WATER PUMP	A5019-01A0	030720
FAN DRIVE PULLEY (#26302312-)	A502P-01D2	030730
COLLING FAN BOLT (#26302312-)	A502R-01A1	030740
FAN PILOT SPACE (#26302312-)	A504P-01A3	030750
WATER TEMPERATURE SENSOR (#26302312-)	A5090-01A2	030760
CORROSION RESISTOR (#26321894-)	A5210-01B5	030770
ALTERNATOR (60A) (#26302312-)	A601P-01B1	030780
ALTERNATOR (60A) (INNER PARTS) (#26302312-)	A601P-02B1	030790
BELT TENSIONER (FOR 35, 60A ALTERNATOR)		
(#26302312-)	A601S-01F3	030800
ALTERNATOR MOUNTING (FOR 35A, 60A ALTERNATOR)	A601T-01B1	030810
BELT GUARD (#26302312-)	A601V-01A0	030820

	FIG. NO	PAGE
ALTERNATOR COVER (FOR 60A ALTERNATOR) (#26302312-)	A6010-01B1	030830
STARTING MOTOR (4.5KM)		
(WITH PROTECT COVER) (#26302312-)	A621P-01A4	030840
STARTING MOTOR (45KM) (WITH PROTECT COVER)		
(INNER PARTS) (#26302312-)	A621P-02A4	030850
STARTING MOTOR MOUNTING (4.5KM)	A621S-01A7Z	030860
HEATER RELATED PARTS (COLD TERRAIN SPEC.)		
(#26339177-)	A6510-01A0	030870
REPAIR PARTS (1/4) (CYLINDER HEAD)	A8110-01A9	030880
REPAIR PARTS (2/4) (CYLINDER BLOCK)	A8110-02A9	030890
REPAIR PARTS (3/4) (CRANKSHAFT)	A8110-03A9	030900
REPAIR PARTS (4/4) (PISTON)	A8110-04A9	030910
CYLINDER HEAD GASKET KIT (#26302312-)	A8126-01A1	030920
CYLINDER BLOCK GASKET KIT (#26302312-)	A8126-02A1	030930
CAUTION PLATE (JAPANESE-ENGLISH) (#26331373-)	A9810-01G0	030940
HEATER SWITCH (#26302312-)	B9999-Z1E7	030950
GLOW TIMER (#26302312-)	B9999-01P9	030960
SPARE PARTS (#26302312-)	B9999-01R0	030970
WATER SEPARATOR (#26302312-)	B9999-01R1	030980
SPARE PARTS (FOR 35A, 60A ALTERNATOR) (#26333506-)	B9999-01T5	030990
B0 [ENGINE RELATED PARTS]		
ENGINE MOUNT	B0100-01A0	030010
ENGINE HARNESS (1/2)	B0110-01A0	030020
ENGINE HARNESS (1/2) (FOR HEATER)	B0110-01A1	030030
ENGINE HARNESS (2/2) (STARTER HARNESS AND SENSOR)	B0110-02A0	030040
EXHAUST PIPE	B0300-01A0	030050
DAMPER	B0600-01A0	030060
C0 [COOLING SYSTEM]		
FAN DRIVE	C0110-01A0	060010
RADIATOR	C0110-02A0	060020
RADIATOR MOUNT	C0110-03A0	060030

	FIG. NO	PAGE
RADIATOR (RADIATOR BUFFLE AND FAN DRIVE)	C0110-04A0	060040
COOLING LINE	C0120-01A0	060050
TRANSFER OIL COOLER	C0400-01A0A	060060
D0 [FUEL TANK AND RELATED PARTS]		
FUEL TANK	D0100-01A0	090010
WATER SEPARATOR	D0100-02A0	090020
E0 [ELECTRICAL SYSTEM]		
BATTERY	E0110-01A0	120010
BATTERY BOX	E0120-01A1	120020
REAR COMBINATION LAMP	E0120-02A1	120030
FRONT HARNESS	E0200-01A4	120040
FRONT HARNESS (E.C.S.S. LESS)	E0200-03A1	120050
KOMTRAX	E0201-01A0	120051
REAR HARNESS (1/4) (MAIN HARNESS)	E0202-01A2	120060
REAR HARNESS (2/4) (RELAY FUSE AND SUB HARNESS)	E0202-02A0	120070
REAR HARNESS (3/4) (BATTERY CABLE)	E0202-03A2	120080
REAR HARNESS (4/4) (HST HARNESS)	E0202-04A0	120090
REAR HARNESS (SWITCH MOUNT PARTS)	E0202-05A0	120100
FRONT LIGHT	E0300-01A0	120110
HORN	E0410-01A0	120120
F0 [TRANSMISSION]		
TRANSFER MOUNT	F2420-01A0	150010
TRANSFER CAP	F2420-02A3	150020
TRANSFER (1/4) (CLUTCH HOUSING)	F2420-51A0	150030
TRANSFER (2/4) (CLUTCH HOUSING)	F2420-52A0	150040
TRANSFER (3/4) (GEAR)	F2420-53A0	150050
TRANSFER (4/4) (OUTPUT) (B10001-B10319)	F2420-54A0	150060
TRANSFER (4/4) (OUTPUT) (B10320)	F2420-54A0A	150061
HST PUMP	F2430-01A0	150070
HST OIL LINE (CHARGE LINE)	F2760-01A0	150080
HST OIL LINE (CHARGE LINE)	F2760-01A1	150081
HST OIL LINE (MAIN LINE)	F2760-02A0	150090
HST OIL LINE (FILTER AND TRANSFER LINE)	F2760-03A0	150100
DRIVE SHAFT	F4200-01A0	150110
FRONT AXLE MOUNTING	F4400-01A0	150120
FRONT AXLE (FINAL DRIVE AND HOUSING)	F4400-51A0	150130
FRONT AXLE (DIFFERENTIAL)	F4400-52A0	150140
FRONT AXLE (COVER AND BRAKE)	F4400-53A0	150150
FRONT AXLE (MOUNTING PARTS AND VALVE)	F4400-54A0	150160
PARKING BRAKE CONTROL	F4460-01A0	150170
REAR AXLE MOUNTING	F4500-01A0	150180
REAR AXLE (FINAL DRIVE AND HOUSING)	F4500-51A0	150190
REAR AXLE (DIFFERENTIAL)	F4500-52A0	150200
REAR AXLE (COVER AND BRAKE)	F4500-53A0	150210
REAR AXLE (MOUNTING PARTS AND VALVE)	F4500-54A0	150220
TRANSFER MOUNT	F4810-01A0	150230
H0 [HYDRAULIC SYSTEM]		
HYDRAULIC TANK	H0110-01A0A	180010
MAIN VALVE (FOR 3-SPOOL VALVE)	H0120-01A2	180020
MAIN VALVE	H0120-01A4	180030
STEERING VALVE	H0122-01A0	180040
STEERING VALVE (PIPING) (PRIORITY VALVE TO STEERING VALVE)	H0122-02A0	180050
HYDRAULIC PUMP	H0210-01A0	180060
FAN DRIVE PIPING	H2260-01A0	180070
HYDRAULIC PIPING (DRAIN LINE HOSE)	H4200-01A0	180080
HYDRAULIC PIPING (P.P.C. PIPING MOUNT)	H4200-02A0	180090
HYDRAULIC PIPING (DUMP CYLINDER PIPING)	H4200-03A0	180100
HYDRAULIC PIPING (LIFT CYLINDER LINE)	H4200-04A2	180110
HYDRAULIC PIPING (PLATE)	H4200-05A0	180120
HYDRAULIC PIPING	H4200-05A6	180130
HYDRAULIC PIPING (RETURN LINE)	H4200-06A0	180140

	FIG. NO	PAGE
HYDRAULIC PIPING (VALVE)	H4200-07A0	180150
HYDRAULIC PIPING (RETURN LINE) (OIL COOLER)	H4200-08A0	180160
HYDRAULIC PIPING (ACCUMULATOR)	H4200-09A0	180170
HYDRAULIC PIPING (ACCUMULATOR) (FOR 3-SPOOL VALVE)	H4200-09A2	180180
HYDRAULIC PIPING (LIFT CYLINDER HOSE)	H4200-10A2	180190
HYDRAULIC PIPING (PIPING)	H4200-13A2	180200
STEERING LINE	H4410-01A0	180210
STEERING LINE (CUSHION VALVE)	H4410-51A0	180220
J0 [MAIN/REVOLVING FRAME AND RELATED PARTS]		
FRONT FRAME (EXCEPT JAPAN) (#B10001-B10134)	J4110-01A1	210010
FRONT FRAME (EXCEPT JAPAN) (FOR 3-SPOOL VALVE OR FOR E.C.S.S) (#B10135-)	J4110-01A2	210020
REAR FRAME	J4120-01A0	210030
REAR FRAME (FOR ADDITIONAL COUNTER WEIGHT) (#B10001-B10152)	J4120-01A1	210040
HINGE PIN	J4130-01A0	210050
STEERING CYLINDER	J4140-01A0	210060
BAR LOCK AND COVER	J4190-01A0	210070
BAR LOCK AND COVER (FOR 3-SPOOL VALVE)	J4190-01A4	210080
BAR LOCK AND COVER (FOR POWER TRAIN GUARD)	J4190-01A6	210081
BAR LOCK AND COVER (FOR POWER TRAIN GUARD ¤ 3-SPOOL VALVE)	J4190-01A7	210082
REAR AXLE SUPPORT	J4210-01A0	210090
REMOTE GREASE	J4710-01A0	210100
K0 [OPERATOR'S COMPARTMENT AND CONTROL SYSTEM]		
OPERATOR'S SEAT (SUSPENTION) (FABRIC TYPE) (KAB)	K0110-01A7	240010
OPERATOR'S SEAT (SUSPENTION) (VINIL TYPE) (KAB)	K0110-01A8	240020
OPERATOR'S SEAT (SUSPENTION) (FABRIC TYPE) (SEAT BELT W=76)	K0110-01A9	240021
SEAT BELT (78 MM) (FOR SUSPENTION) (#B10001-B10152)	K0160-01A4	240030
FLOOR (PARKING BRAKE)	K0210-01A0	240040
AIR CONDITIONER DUCT (FRONT DUCT)	K0210-02A0	240050
AIR CONDITIONER DUCT (FLOOR DUCT)	K0210-03A0	240060
AIR CONDITIONER DUCT LESS	K0210-03A5	240070
FLOOR (CONSOLE COVER L.H.)	K0210-04A0	240080
FLOOR (FLOOR)	K0210-05A0	240090
FLOOR (CONSOLE BOX) (R.H.) (EXCEPT JAPAN)	K0210-06A5	240100
FLOOR (CONSOLE BOX) (L.H.)	K0210-07A0	240110
FLOOR (COVER R.H.)	K0210-08A0	240120
FLOOR (COVER R.H.) (FOR MONO + 1-ATTACHMENT LEVER)	K0210-08A4	240130
FLOOR (AIR CONDITIONER)	K0210-09A0	240140
FLOOR (LOADER CONTROL) (1/2) (P.P.C VALVE AND LEVER) (FOR MONO LEVER)	K0210-10A0	240150
FLOOR (LOADER CONTROL) (1/2) (P.P.C VALVE AND LEVER) (FOR MONO + 1-ATTACHMENT LEVER)	K0210-10A4	240160
FLOOR (LOADER CONTROL) (2/2) (HOSE) (FOR MONO LEVER)	K0210-11A0	240170
FLOOR (LOADER CONTROL)	K0210-11A4	240180
FLOOR (BRAKE CONTROL) (#B10001-)	K0210-12A0A	240190
FLOOR (INCHING BRAKE)	K0210-13A0	240200
FLOOR (HST CONTROLLER)	K0210-14A0	240210
FLOOR (HEATER PIPING)	K0210-15A0	240220
FLOOR (AIR CONDITIONER PIPING)	K0210-16A0	240230
FLOOR (PLUG) (AIR CONDITIONER LESS) (FOR OPEN CAB)	K0210-16A9	240240
FLOOR (ELECTRICAL) (STARTING SWITCH) (EXCEPT JAPAN)	K0210-17A5	240250
FLOOR (WIPER SWITCH)	K0210-18A0	240260
FLOOR (WASHER HOSE)	K0210-19A0	240270
FLOOR (FLOOR HARNESS) (MAIN HARNESS)	K0210-20A5	240280
FLOOR (FLOOR HARNESS) (MAIN HARNESS) (FOR OPEN CAB)	K0210-20A9	240290
FLOOR (EARTH)	K0210-21A0	240300
FLOOR (ELECTRICAL PARTS) (E.C.S.S LESS)	K0210-22A5	240310

	FIG. NO	PAGE
FLOOR (RELAY) (R.H. CONSOLE)	K0210-23A0	240320
FLOOR (WIRING HARNESS) (PLUG)	K0210-25A2	240340
FLOOR (WIRING HARNESS) (PLUG)	K0210-25A5	240350
FLOOR (MAIN MONITOR)	K0210-26A2	240360
FLOOR (MAIN MONITOR) (FOR OPEN CAB)	K0210-26A9	240370
FLOOR (MAIN MONITOR) (FOR OPEN CAB) (WITH WORK LAMP SWITCH)	K0210-26B0	240371
FLOOR (ENGINE CONTROLLER)	K0210-27A0	240380
STEERING DEMAND VALVE	K0210-28A0	240390
STEERING WHEEL (VALVE MOUNT)	K0210-29A0	240400
STEERING WHEEL (COLUMN AND ORBITROL)	K0210-30A0	240410
TRANSMISSION CONTROL	K0210-31A0	240420
COOL AND HEAT BOX (AIR CONDITIONER LESS)	K0210-32A5	240430
COOL AND HEAT BOX (FOX AIR CONDITIONER)	K0210-32A6	240440
FLOOR (COVER)	K0210-33A5	240450
FLOOR (COVER) (FOR OPEN CAB)	K0210-33A9	240460
FLOOR (CAP)	K0210-34A0	240470
HAND RAIL	K0210-35A0	240480
WORKING LAMP AND PLATE	K0210-36A0	240490
PLATE	K0210-36A1	240491
FLOOR (SPEAKER COVER)	K0210-46A5	240500
ROPS CAB (BODY, GLASS)	K0210-51A5	240510
OPEN CAB (BODY, GLASS)	K0210-51A6	240520
OPEN CAB	K0210-51A9	240530
ROPS CAB (ROOF PAD)	K0210-52A5	240540
ROPS CAB (ROOF PAD)	K0210-52A5A	240541
OPEN CAB (ROOF LINING)	K0210-52A6	240550
OPEN CAB (SUN VISOR)	K0330-01A0	240551
ROPS CAB (WIPER)	K0210-53A5	240560
OPEN CAB (WIPER)	K0210-53A6	240570
ROPS CAB (SHEET, COVER)	K0210-54A5	240580
OPEN CAB (SHEET, COVER)	K0210-54A6	240590
ROPS CAB (DOOR L.H.)	K0210-55A5A	240600
ROPS CAB (DOOR R.H.)	K0210-56A5A	240610
ROPS CAB (STOPPER)	K0210-57A5	240620
ROPS CAB (MARK)	K0210-58A5	240630
ROPS CAB (COVER)	K0210-59A0	240640
OPEN CAB (COVER)	K0210-59A5	240650
FLOOR MAT	K0310-01A0	240660
WINDOW WASHER	K0350-01A0	240670
AIR CONDITIONER	K0710-01A0	240680
AIR CONDITIONER (MOUNTING AND PIPING)	K0711-01A0	240690
AIR CONDITIONER (PIPING)	K0711-02A0	240700
AIR CONDITIONER (CONDENSER MOUNTING)	K0711-03A0	240710
HEATER PIPING	K0713-01A0	240720
RADIO LESS (COVER)	K0810-01A1	240730
RADIO (CASSETTE, AM,FM)	K0810-01A2	240740
FLOOR (ANTENNA, SPEAKER)	K0810-01A3	240741
FLOOR SUPPORT	K4100-01A0	240750
GAUGE AND SENSOR	K4220-01A0	240760
ENGINE CONTROL	K4410-01A0	240770
INCHING CONTROL	K4450-01A0	240780
BRAKE CONTROL (CHARGE VALVE)	K4460-01A0	240790
BRAKE CONTROL (ACCUMULATOR)	K4460-02A0	240800
BRAKE CONTROL (BRAKE PIPING, FAN MOTOR LINE)	K4460-03A0	240810
CHARGE VALVE (BRAKE) (INNER PARTS)	K4460-51A0	240820
BRAKE PIPING	K4470-01A0	240830
BUCKET POSITIONER	K4504-01A0	240840

M0 [GUARD]

HOOD	M4100-01A0	270010
HOOD (BULK HEAD)	M4100-02A0	270020
HOOD (DOOR)	M4100-03A0	270030
HOOD (RADIATOR GUARD)	M4100-04A0	270040
HOOD (DUCT COVER)	M4100-05A0	270050
HOOD MOUNTING	M4100-07A0	270060

	FIG. NO	PAGE
HOOD (COVER AND STRIKER)	M4100-08A0	270070
HOOD (CAP)	M4100-09A0	270080
HOOD (RADIATOR PIPING AND BUFFLE PLATE)	M4100-10A0A	270090
HOOD (DUCT SHEET)	M4100-11A0	270100
HOOD (COVER) (FOR TANK AND MAINTENANCE COVER LOCK)	M4100-13B2	270110
HOOD (AIR CONDITIONER PLUG)	M4100-14B0	270120
REAR FENDER	M4200-01A0	270130
FRONT FENDER (FULL FENDER)	M4210-01A1	270140
FLOOR COVER	M4230-01A0	270150
LADDER	M4310-01A0	270160
MIRROR	M4410-01A2	270170
MIRROR (FOR CANOPY)	M4410-01A3	270180
COUNTER WEIGHT (ADDITIONAL WEIGHT)	M4510-01A3	270190
S0 [SUSPENSION AND WHEEL RELATED PARTS]		
RIM (FOR 14.0-25 TUBELESS TIRE)	S0110-01A2	300010
RIM (FOR 17.5-25 TUBELESS TIRE)	S0110-01A3	300020
TIRE (17.25-12PR-L2, TUBELESS TIRE)	S0120-01A0	300030
TIRE (17.5-25-12L3, TUBELESS TIRE)	S0120-01A1	300040
TIRE (17.5-25-16PR-L3, TUBELESS TIRE)	S0120-01A2	300050
TIRE (20.5-25-12PR-L3, TUBELESS TIRE)	S0120-01A3	300060
TIRE (20.5-25-16PR-L3, TUBELESS TIRE)	S0120-01A4	300070
T0 [WORK EQUIPMENT]		
LIFT ARM AND BELLCRANK (#B10001-B10134)	T4110-01A0	330010
LIFT ARM AND BELLCRANK (FOR 3-SPOOL VALVE)	T4110-01A1	330020
LIFT ARM AND BELLCRANK (MOUTING PARTS)	T4110-02A0	330030
LIFT ARM AND BELLCRANK (BOOM KICK OUT)	T4110-03A0	330040
BUCKET 1.9M2 (WITH B.O.C., 2.0M3)	T4120-01A1	330050
BOLT ON CUTTING EDGE	T4122-21A1	330060
TOOTH (TIP TOOTH)	T4130-01A1	330070
LIFT CYLINDER	T4140-01A0	330080
BUCKET CYLINDER	T4150-01A0	330090

	FIG. NO	PAGE
U0 [MARKS AND PLATES]		
MARK AND PLATES (SPANISH)	U0100-01A2	360010
MARK AND PLATES (PORTUGUESE)	U0100-01A3	360020
MARK AND PLATES (FLOOR DECAL) (SPANISH)	U0100-02A1	360030
MARK AND PLATES (FLOOR DECAL) (PORTUGUESE)	U0100-02A2	360050
V0 [ACCESSORY AND TOOL]		
SPARE PARTS (EXCEPT JAPAN)	V0100-01A1	390010
TOOL (LOCK)	V0300-01A2	390020
TOOL (TOOL KIT)	V0300-01A3	390030
Y0 [SERVICE KIT AND COMPONENT PARTS]		
PUMP (1/14)	Y1610-01A0	420010
PUMP (2/14)	Y1610-02A0	420020
PUMP (3/14)	Y1610-03A0	420030
PUMP (4/14)	Y1610-04A0	420040
PUMP (5/14)	Y1610-05A0	420050
PUMP (6/14)	Y1610-06A0	420060
PUMP (7/14)	Y1610-07A0	420070
PUMP (8/14)	Y1610-08A0	420080
PUMP (9/14)	Y1610-09A0	420090
PUMP (10/14)	Y1610-10A0	420100
PUMP (11/14)	Y1610-11A0	420110
PUMP (12/14)	Y1610-12A0	420120
PUMP (13/14)	Y1610-13A0	420130
PUMP (14/14)	Y1610-14A0	420140
TORQUE CONVERTER AND P.P.C. PUMP (INNER PARTS) (1/4)	Y1610-31A0	420150
TORQUE CONVERTER AND P.P.C. PUMP (INNER PARTS) (2/4)	Y1610-32A0	420160
TORQUE CONVERTER AND P.P.C. PUMP (INNER PARTS) (3/4)	Y1610-33A0	420170
TORQUE CONVERTER AND P.P.C. PUMP (INNER PARTS) (4/4)	Y1610-34A0	420180
BOOM CYLINDER (INNER PARTS)	Y1620-01A0	420190
BUCKET CYLINDER (INNER PARTS)	Y1620-11A0	420200
STEERING CYLINDER (INNER PARTS)	Y1622-01A0	420210

	FIG. NO	PAGE
MOTOR (1/6)	Y1651-01A0	420220
MOTOR (1/6)	Y1651-01A1	420230
MOTOR (2/6)	Y1651-02A0	420240
MOTOR (3/6)	Y1651-03A0	420250
MOTOR (4/6)	Y1651-04A0	420260
MOTOR (4/6)	Y1651-04A1	420270
MOTOR (5/6)	Y1651-05A0	420280
MOTOR (5/6)	Y1651-05A1	420290
MOTOR (6/6)	Y1651-06A0	420300
MOTOR (6/6) (WITH ORIFICE)	Y1651-06A1	420310
CONTROL VALVE (3-SPOOL) (1/2)	Y1663-01A0	420320
CONTROL VALVE (3-SPOOL) (2/2)	Y1663-02A0	420330
PPC VALVE (FOR MONO LEVER)	Y1670-01A0	420340
PPC VALVE (FOR MONO + 1-ATTACHMENT LEVER)	Y1670-01A2	420350

ZZ [NUMERICAL INDEX]

NUMERICAL INDEX	ZZ	1

ENGINE

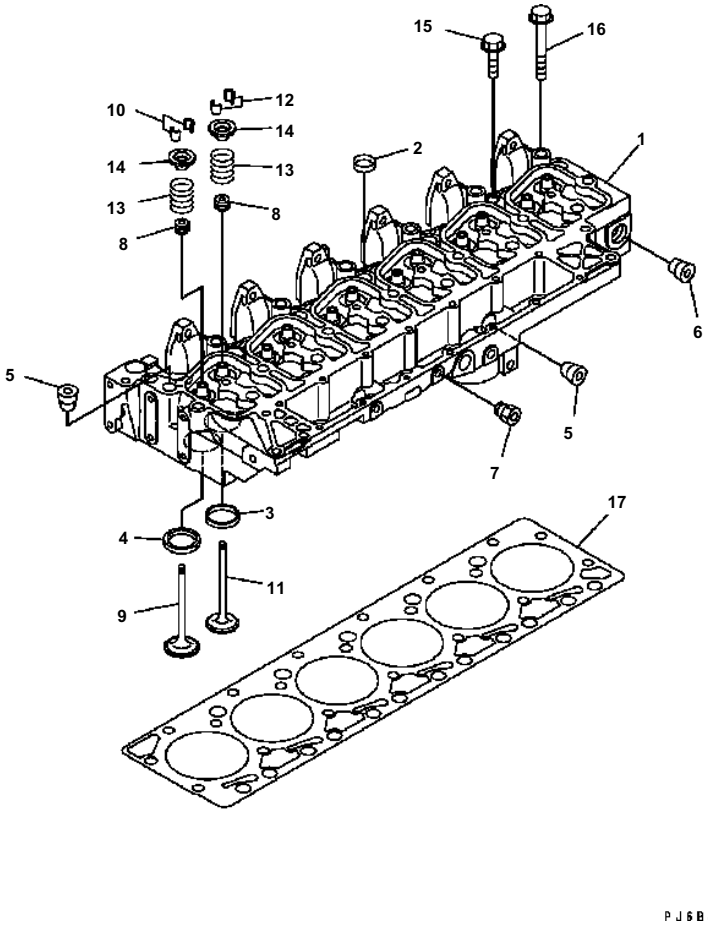

Engine SAA6D102E-2 S/N 26340280-UP

CYLINDER HEAD

Item	Part No.	Description	Qty	Options
	6731-11-1371	HEAD ASS'Y	1	
1	☆	· HEAD	1	SN:26317355--
2	6736-11-1150	· PLUG	5	SN:26317355--
3	6732-11-1170	· INSERT{EXHAUST}	6	SN:26274903--
4	6732-11-1180	· INSERT{INTAKE}	6	SN:26274903--
5	6732-11-1910	· PLUG	5	SN:26274903--
6	6732-11-1920	· PLUG	1	SN:26274903--
7	6732-11-1930	· PLUG	2	SN:26274903--
8	6732-41-4541	SEAL\((K1)\)	12	SN:26274903--
	6736-41-4110	INTAKE VALVE ASS'Y	6	SN:26317355--
9	☆	· VALVE	1	SN:26274903--
10	6732-41-4520	· COTTER	2	SN:26274903--
	6736-41-4210	EXHAUST VALVE ASS'Y	6	SN:26274903--
11	☆	· VALVE	1	SN:26274903--
12	6732-41-4520	· COTTER	2	SN:26274903--
13	6732-41-4430	SPRING	12	SN:26274903--
14	6731-41-4511	RETAINER	12	SN:26274903--
15	6732-11-1610	BOLT	6	SN:26317355--
16	6732-11-1620	BOLT	14	SN:26274903--
17	6735-11-1821	GASKET\((K1)\)	1	SN:26274903--
		REFER TO FIG NOS OF REPAIR PARTS FOR O.S.¤ U.S.¤ AND SERVICE PARTS		

Ref. A1009-01A4 Page 030010

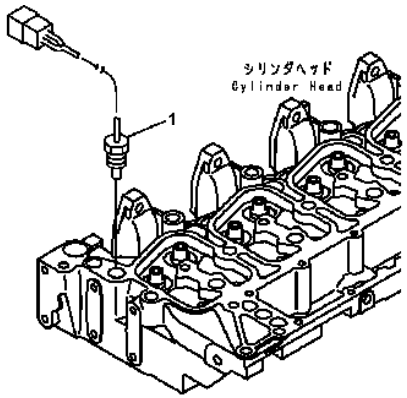

PJ6B173

Engine SAA6D102E-2 S/N 26340280-UP

WATER TEMPERATURE SENSOR (#263023123-)

Item	Part No.	Description	Qty	Options
1	7861-92-3380	SENSOR{WATER TEMPERATURE}	1	SN:26302312--

Ref. A1010-01B5 Page 030020

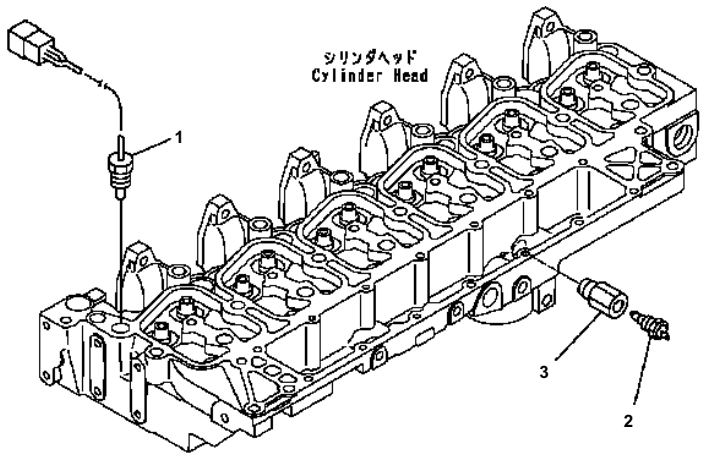

Engine SAA6D102E-2 S/N 26340280-UP

WATER TEMPERATURE SENSOR (EXTREME COLD TERRAIN SPEC.) (#26317773-)

Item	Part No.	Description	Qty	Options
1	7861-92-3380	SENSOR{WATER TEMPERATURE}	1	SN:26317773--
2	600-815-1770	SWITCH{THERMO}	1	SN:26317773--
3	391-40-13220	NIPPLE	1	SN:26317773---

Ref. A1010-01D0 Page 030030

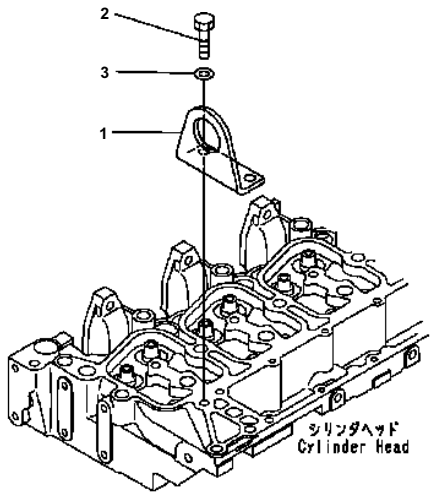

PJD1573

Engine SAA6D102E-2 S/N 26340280-UP

FRONT RANGER (#26302312-)

Item	Part No.	Description	Qty	Options
1	6732-11-1970	BRACKET	1	SN:26302312--
2	01010-81025	BOLT	2	SN:26302312--
3	01643-31032	WASHER	2	SN:26302312--

Ref. A1030-01A1Z Page 030040

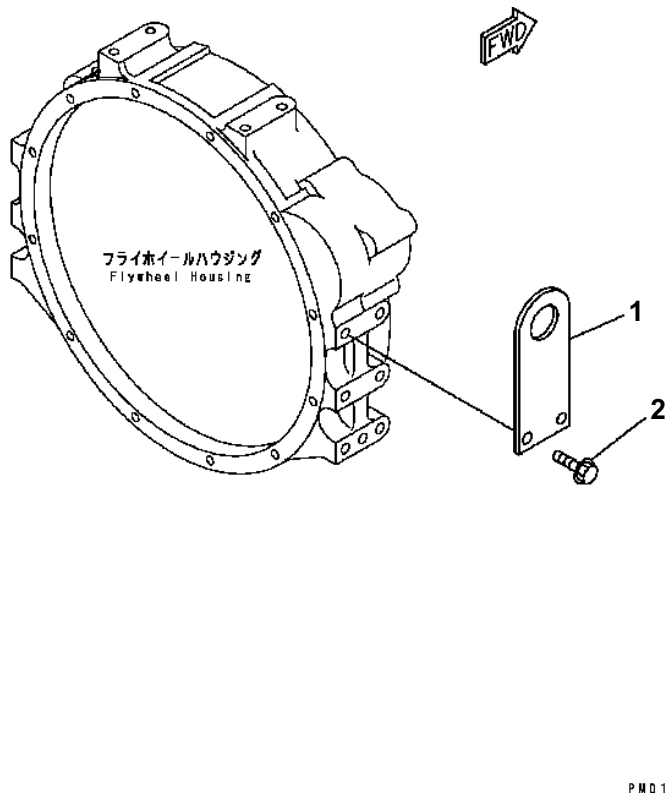

Engine SAA6D102E-2 S/N 26340280-UP

REAR HANGER (#26302312-)

Item	Part No.	Description	Qty	Options
1	6732-21-1920	HANGER	1	SN:26302312--
2	01435-01230	BOLT	2	SN:26302312--

Ref. A1050-01A0 Page 030050

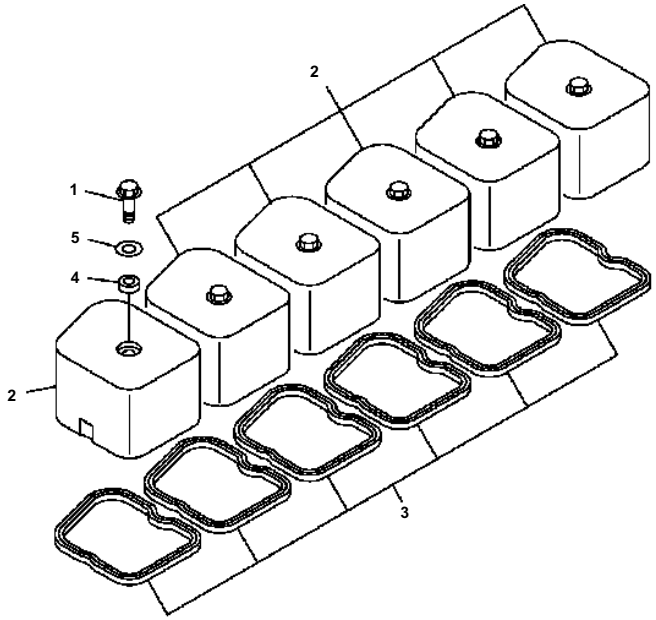

PFD1699

Engine SAA6D102E-2 S/N 26340280-UP

HEAD COVER (#26302312-)

Item	Part No.	Description	Qty	Options
1	6732-11-8130	BOLT	6	SN:26302312--
2	6735-11-8120	COVER	6	SN:26302312--
3	6732-11-8181	GASKET\((K1)\)	6	SN:26302312--
4	6732-11-8210	GASKET\((K1)\)	6	SN:26302312--
5	6732-11-8150	WASHER	6	SN:26302312--

Ref. A111P-01A3 Page 030060

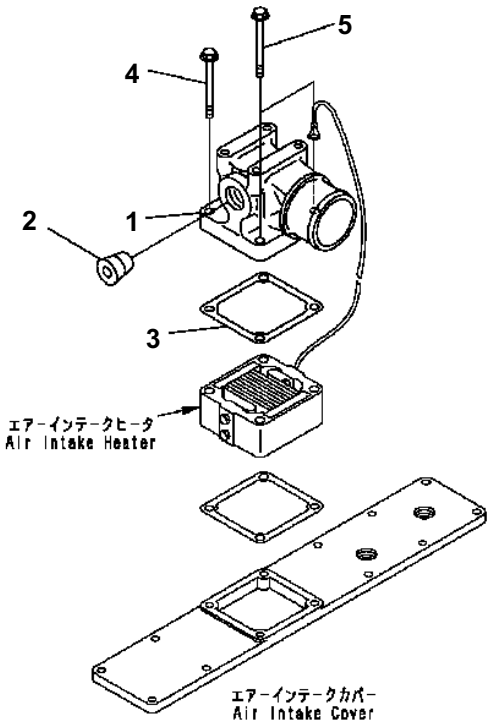

00000168

Engine SAA6D102E-2 S/N 26340280-UP

AIR CONNECTOR (#26302312-)

Item	Part No.	Description	Qty	Options
1	6738-11-4430	CONNECTOR	1	SN:26302312--
2	6732-11-1920	PLUG	1	SN:26302312--
3	6732-11-4811	GASKET\((K1)\)	1	SN:26302312--
4	6732-11-4170	BOLT	2	SN:26302312--
5	6732-11-4150	BOLT	2	SN:26302312--

Ref. A131P-01A8 Page 030070

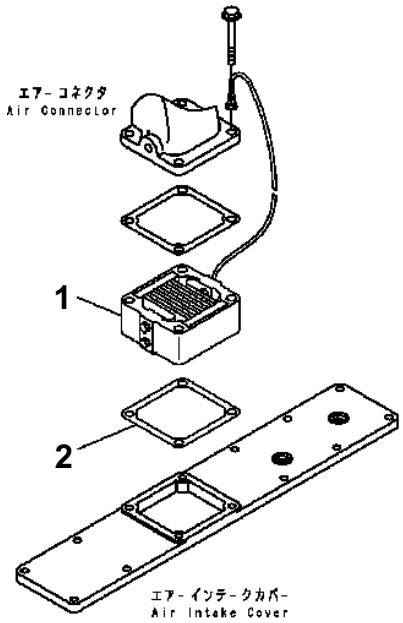

P J6R3999

Engine SAA6D102E-2 S/N 26340280-UP

AIR INTAKE HEATER

Item	Part No.	Description	Qty	Options
1	6732-81-5120	HEATER ASS'Y	1	SN:26274903--
2	6732-11-4811	GASKET\((K1)\)	1	SN:26274903--

Ref. A131R-01A0 Page 030080

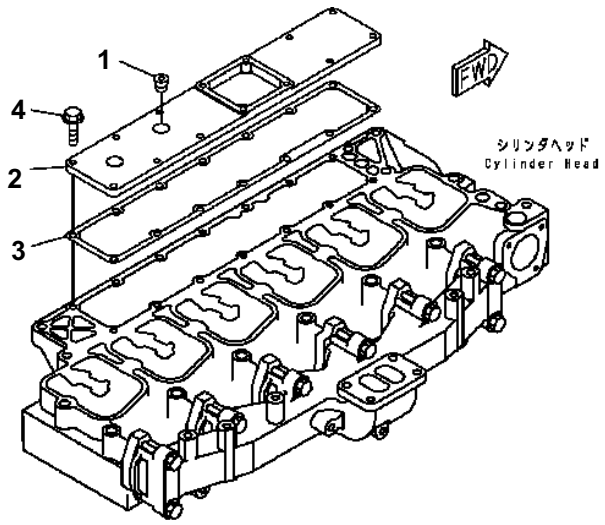

Engine SAA6D102E-2 S/N 26340280-UP

AIR INTAKE COVER

Item	Part No.	Description	Qty	Options
1	6732-11-1910	PLUG	2	SN:26274903--
2	6735-11-4110	COVER{INTAKE}	1	SN:26274903--
3	6735-11-4812	GASKET\((K1)\)	1	SN:26287624--
4	6732-11-4160	BOLT	8	SN:26274903--

Ref. A131V-01A0 Page 030090

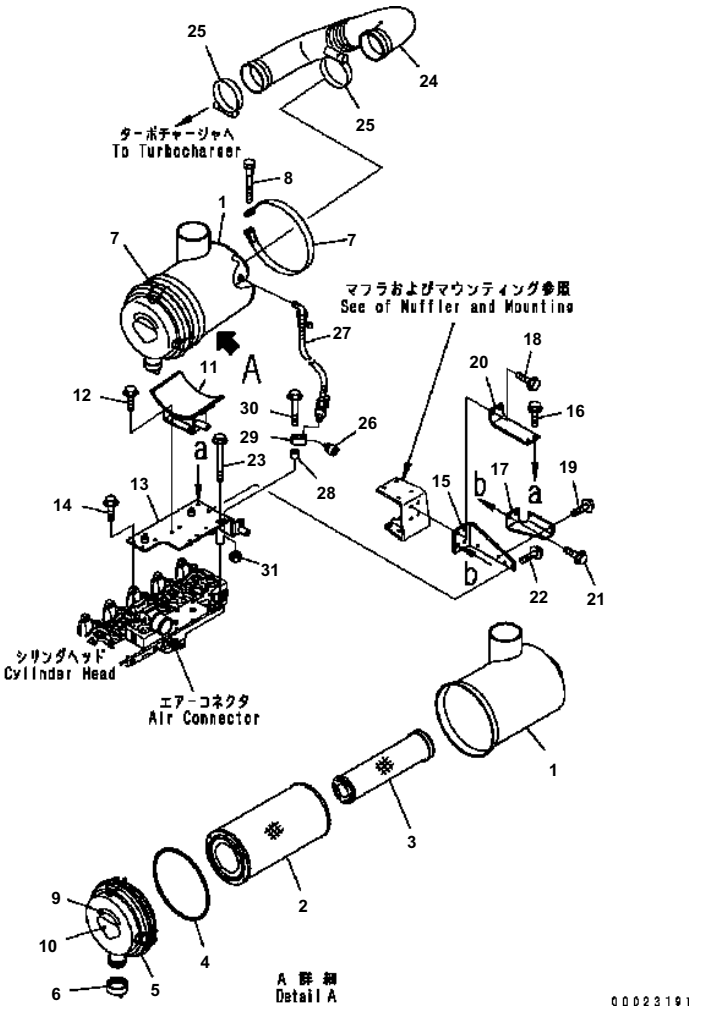

Engine SAA6D102E-2 S/N 26340280-UP

AIR CLEANER (#26319077-)

Item	Part No.	Description	Qty	Options
	6738-81-7400	AIR CLEANER ASS'Y	1	SN:26319077--
1	6738-81-7410	・ BODY	1	SN:26319077--
	600-185-3100	・ ELEMENT ASS'Y	1	SN:26319077--
2	600-185-3110	・・ ELEMENT{OUTER}	1	SN:26319077--
3	(☆600-185-3120)	・・ ELEMENT{INNER}	1	SN:26319077--
4	600-184-1370	・・ O-RING	1	SN:26319077--
5	600-184-1310	・ COVER ASS'Y	1	SN:26319077--
	600-184-2810	・・ PLATE	1	SN:26319077--
6	600-184-1350	・ VALVE	1	SN:26319077--
7	6131-11-4520	BAND ASS'Y	2	SN:26319077--
8	6643-11-4641	BOLT	2	SN:26319077--
9	600-181-1930	PLATE¤ INSTRUCTION	1	SN:26319077--
10	600-184-2810	PLATE	1	SN:26319077--
11	6738-11-9111	BRACKET	1	SN:26319077--
12	01435-00820	BOLT	4	SN:26319077--
13	6738-11-9121	BRACKET	1	SN:26319077--
14	01435-00820	BOLT	4	SN:26319077--
15	6738-11-5561	BRACKET	1	SN:26319077--
16	01435-00825	BOLT	2	SN:26319077--
17	6738-11-5571	BRACKET	1	SN:26319077--
18	01435-01030	BOLT	2	SN:26319077--
19	01435-00820	BOLT	2	SN:26319077--
20	6738-11-5720	BRACKET	1	SN:26319077--
21	01435-01030	BOLT	2	SN:26319077--
22	01435-00825	BOLT	2	SN:26319077--
23	01436-01205	BOLT	2	SN:26319077--
24	6738-11-4440	HOSE	1	SN:26319077--
25	07299-00105	CLAMP	2	SN:26319077--
26	08670-02001	INDICATOR	1	SN:26319077--
27	08671-50030	HOSE	1	SN:26319077--
28	175-79-83760	SPACER	1	SN:26319077--
29	6217-11-4590	BLOCK	1	SN:26319077--
30	01435-01065	BOLT	1	SN:26319077--
31	01580-01008	NUT	1	SN:26319077--

Ref. A1410-01D3 Page 030100

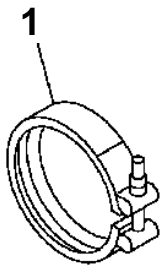

PMD1036

Engine SAA6D102E-2 S/N 26340280-UP

EXHAUST CONNECTOR CLAMP

Item	Part No.	Description	Qty	Options
1	6732-81-8220	CLAMP\((K1)\)	1	SN:26274903--

Ref. A151R-01A0 Page 030110

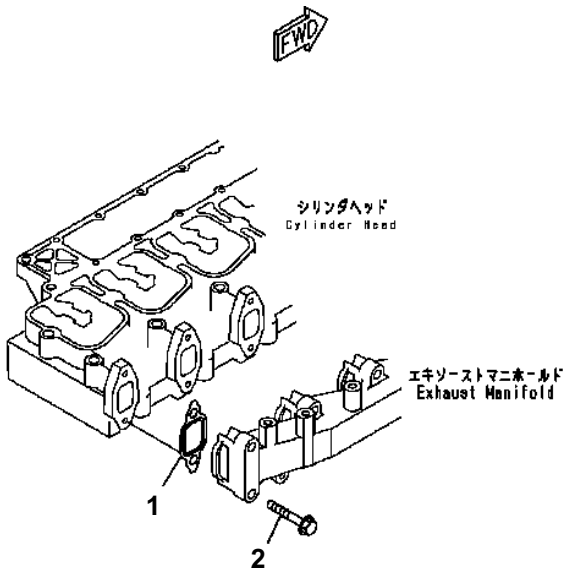

PFD1324

Engine SAA6D102E-2 S/N 26340280-UP

EXHAUST MANIFEST GASKET AND BOLT

Item	Part No.	Description	Qty	Options
1	6736-11-5830	GASKET	6	SN:26312301--
2	6735-11-4150	BOLT	12	SN:26274903--

Ref. A151T-01A2 Page 030120

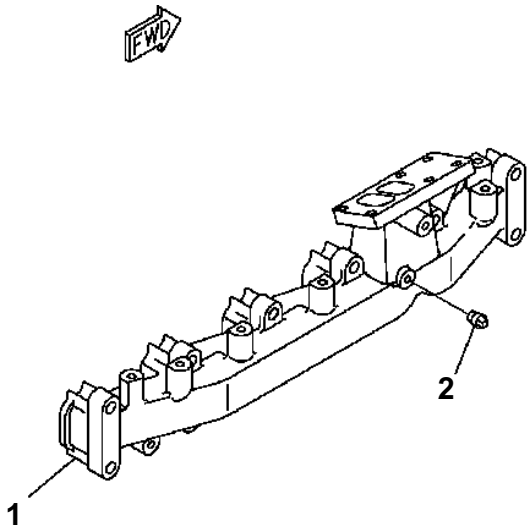

00000171

Engine SAA6D102E-2 S/N 26340280-UP

EXHAUST MANIFOLD (#26302312-)

Item	Part No.	Description	Qty	Options
1	6735-11-5220	MANIFOLD{EXHAUST}	1	SN:26302312---
2	07042-00108	PLUG	1	SN:26302312---

Ref. A151V-01A2 Page 030130

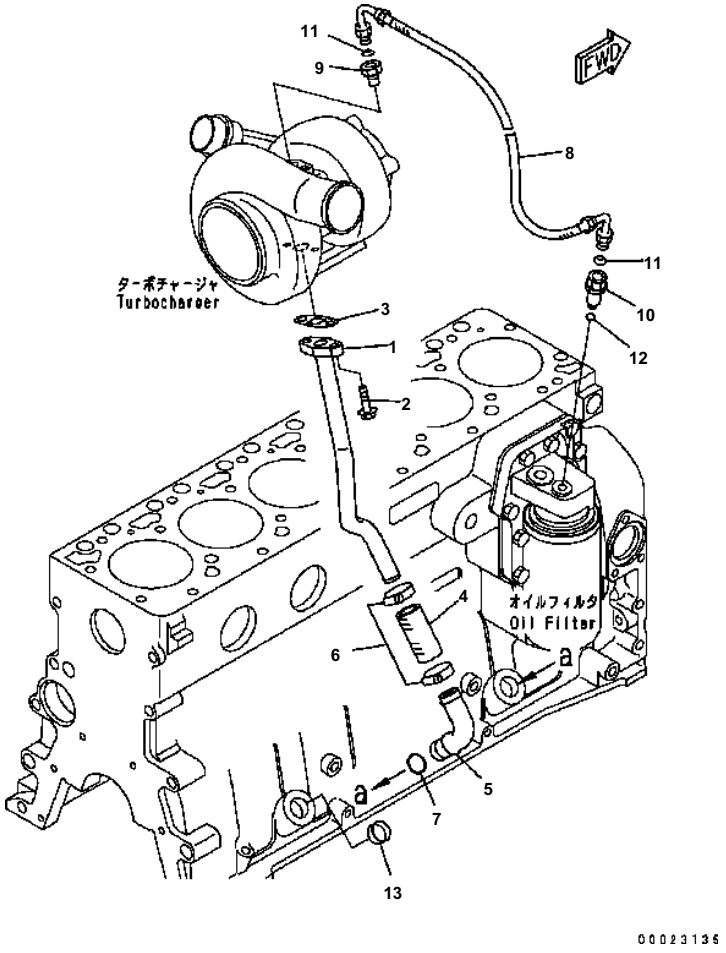

Engine SAA6D102E-2 S/N 26340280-UP

TURBOCHARGER OIL PIPING (#26320577-)

Item	Part No.	Description	Qty	Options
1	6731-51-8190	TUBE{OIL}	1	SN:26320577--
2	6732-71-3220	BOLT	2	SN:26320577--
3	6207-51-7690	GASKET\((K1)\)	1	SN:26320577--
4	6732-51-8370	HOSE	1	SN:26320577--
5	6731-51-8170	TUBE	1	SN:26320577--
6	07281-00359	CLAMP	2	SN:26320577--
7	6731-51-8150	O-RING\((K2)\)	1	SN:26320577--
8	6736-51-8130	HOSE	1	SN:26320577--
9	6736-51-8140	CONNECTOR ASS'Y	1	SN:26320577--
10	6732-51-8480	VALVE	1	SN:26320577--
11	6736-51-8730	WASHER{SEAL}\((K1)\)	2	SN:26320577--
12	6736-51-8710	O-RING\((K1)\)	1	SN:26320577--
13	6735-21-5530	PLUG{EXPANSION}	1	SN:26320577--

Ref. A153T-01C6 Page 030140

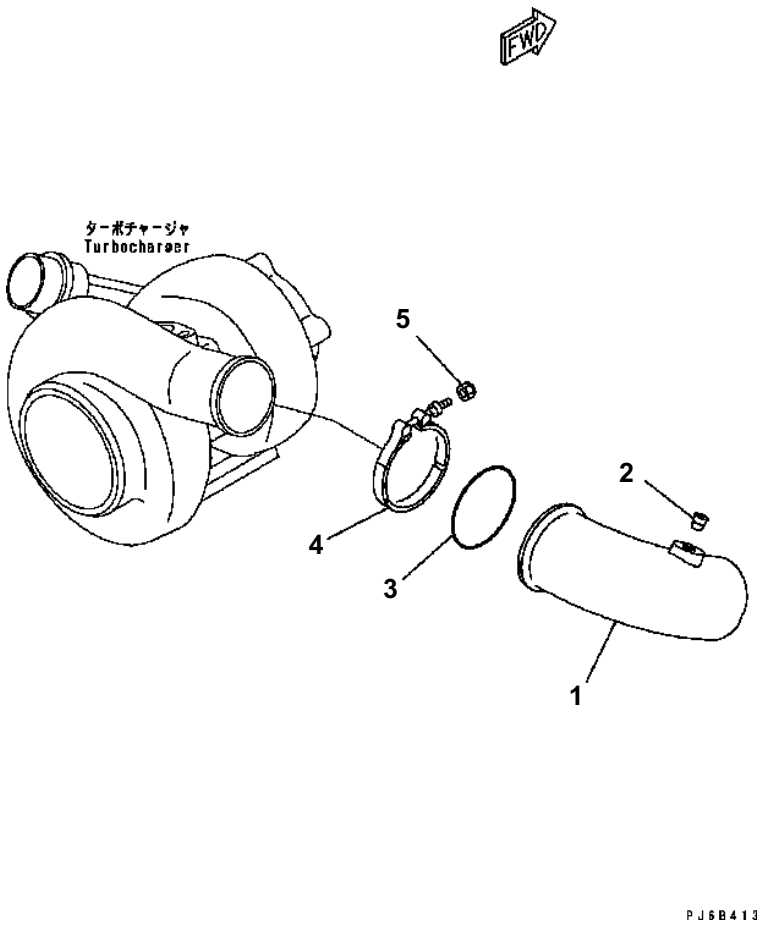

Engine SAA6D102E-2 S/N 26340280-UP

TURBOCHARGER OUT CONNECTION

Item	Part No.	Description	Qty	Options
1	6738-11-4320	PIPE{AIR}	1	SN:26294599--
2	07043-70108	PLUG	1	SN:26274903--
3	6738-11-4370	O-RING\((K1)\)	1	SN:26274903--
4	6738-11-4380	CLAMP	1	SN:26274903--
5	6738-11-4390	NUT	1	SN:26274903--

Ref. A153V-01A0 Page 030150

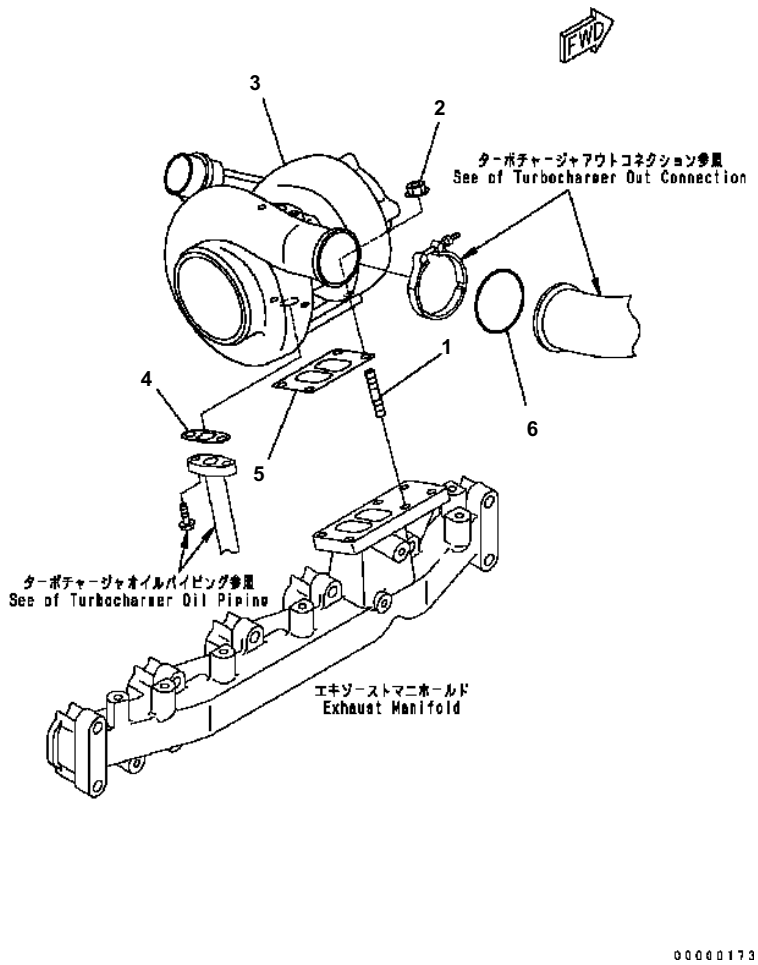

Engine SAA6D102E-2 S/N 26340280-UP

TURBOCHARGER MOUNTING (#26302312-)

Item	Part No.	Description	Qty	Options
1	6732-81-8810	STUD	4	SN:26302312--
2	6732-81-8820	NUT	4	SN:26302312--
	6738-81-8031	KIT{TURBOCHARGER}	1	SN:26339177--
3	(☆6738-81-8121)	・ TURBOCHARGER	1	SN:26339177--
4	6207-51-7690	・ GASKET\((K1)\)	1	SN:26302312--
5	6732-81-8830	・ GASKET\((K1)\)	1	SN:26302312--
6	6738-11-4370	・ O-RING\((K1)\)	1	SN:26302312--

Ref. A1539-01b8 Page 030160

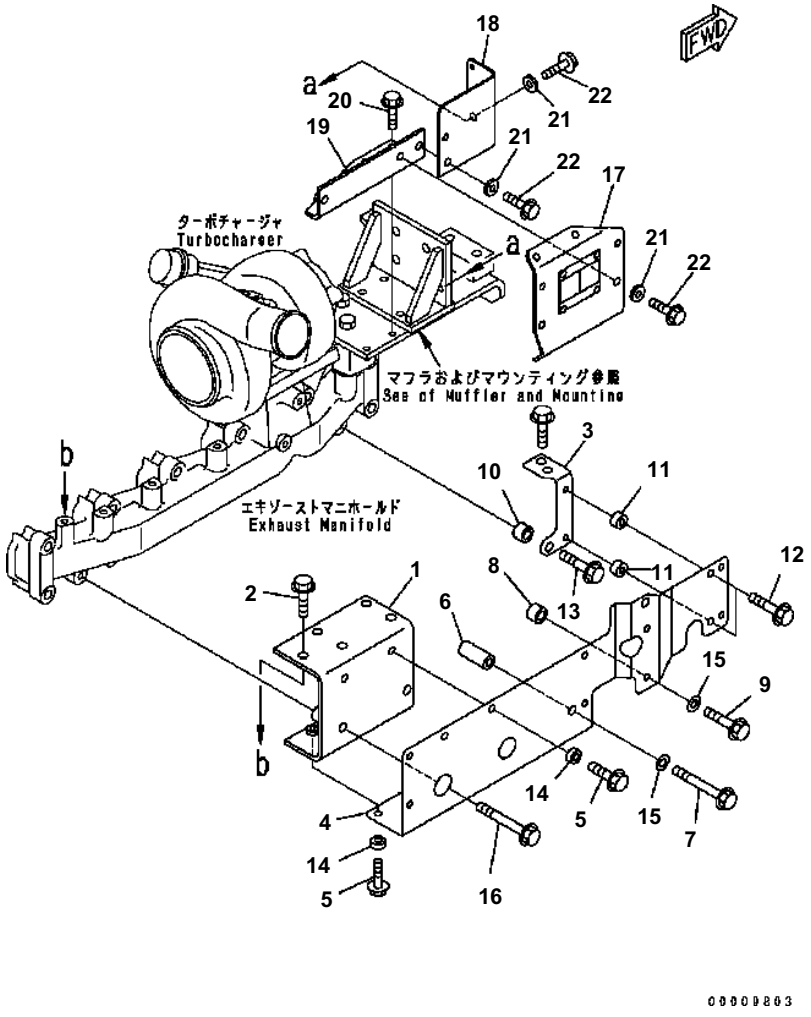

Engine SAA6D102E-2 S/N 26340280-UP

HEAT SHIELD (#26304458-)

Item	Part No.	Description	Qty	Options
1	6738-81-8470	BRACKET	1	SN:26304458--
2	01435-01020	BOLT	1	SN:26304458--
3	6735-81-8710	BRACKET	1	SN:26304458--
4	6735-81-8130	COVER	1	SN:26304458--
5	01435-00820	BOLT	4	SN:26304458--
6	6134-11-5120	SPACER	1	SN:26304458--
7	01435-01065	BOLT	1	SN:26304458--
8	6206-11-4590	SPACER	1	SN:26304458--
9	01435-01030	BOLT	1	SN:26304458--
10	6206-11-4590	SPACER	1	SN:26304458--
11	6204-81-6740	SPACER	2	SN:26304458--
12	01435-00830	BOLT	2	SN:26304458--
13	01435-01040	BOLT	1	SN:26304458--
14	154-61-16570	WASHER	6	SN:26323434--
15	01643-31032	WASHER	2	SN:26304458--
16	01435-01060	BOLT	2	SN:26304458--
17	6737-81-8241	COVER	1	SN:26304458--
18	6738-81-8540	COVER	1	SN:26304458--
19	6738-81-8461	BRACKET	1	SN:26304458--
20	01435-00816	BOLT	2	SN:26304458--
21	154-61-16570	WASHER	4	SN:26323434--
22	01435-00820	BOLT	4	SN:26304458--

Ref. A1570-01E7 Page 030170

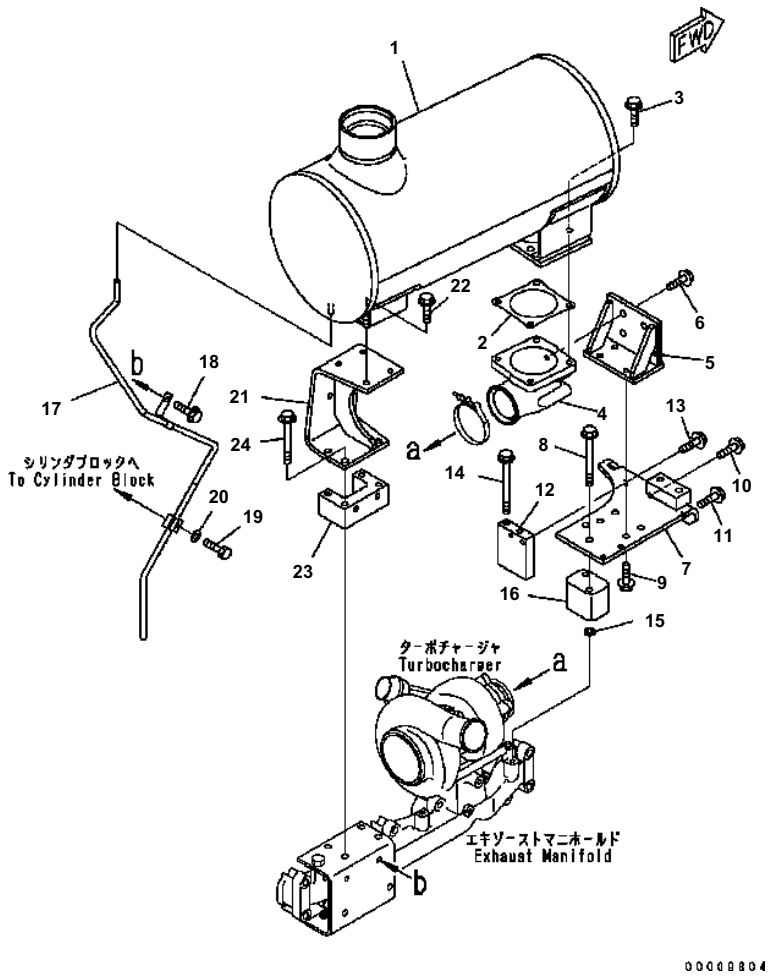

Engine SAA6D102E-2 S/N 26340280-UP

MUFFLER AND MOUNTING (#26304458-)

Item	Part No.	Description	Qty	Options
1	6738-11-5542	MUFFLER	1	SN:26320577--
2	6150-11-5710	GASKET	1	SN:26304458--
3	01435-01025	BOLT	4	SN:26304458--
4	6738-11-5611	ELBOW	1	SN:26304458--
5	6738-11-5710	BRACKET	1	SN:26304458--
6	01435-01020	BOLT	4	SN:26304458--
7	6738-11-5730	BRACKET	1	SN:26304458--
8	01435-01085	BOLT	2	SN:26304458--
9	01435-01020	BOLT	4	SN:26304458--
10	01435-00820	BOLT	1	SN:26304458--
11	01435-00830	BOLT	1	SN:26304458--
12	6738-11-5440	SPACER	1	SN:26304458--
13	01435-00825	BOLT	2	SN:26304458--
14	6202-81-6821	BOLT	2	SN:26304458--
15	209-62-11810	SPACER	1	SN:26304458--
16	6738-11-5360	SPACER	1	SN:26304458--
17	6738-11-5411	TUBE	1	SN:26304458--
18	01435-00820	BOLT	1	SN:26304458--
19	01010-81225	BOLT	1	SN:26304458--
20	01643-31232	WASHER	1	SN:26304458--
21	6738-11-5351	BRACKET	1	SN:26304458--
22	01435-01020	BOLT	4	SN:26304458--
23	6738-11-5371	SPACER	1	SN:26304458--
24	01435-01070	BOLT	4	SN:26304458--

Ref. A1610-01H6 Page 030180

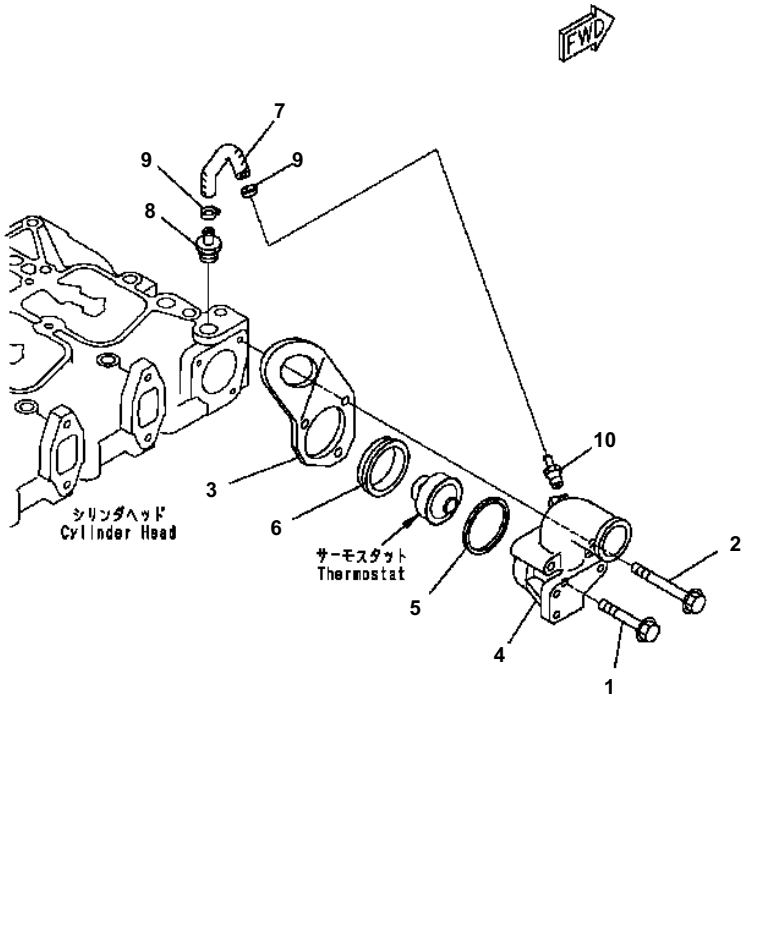

Engine SAA6D102E-2 S/N 26340280-UP

THERMOSTAT HOUSING

Item	Part No.	Description	Qty	Options
1	6732-61-6140	BOLT	1	SN:26340280--
2	6732-61-6180	BOLT	2	SN:26340280--
3	6735-11-1910	BRACKET	1	SN:26340280--
4	6732-61-6310	HOUSING{THERMOSTAT}	1	SN:26340280--
5	6732-61-6250	SEAL{RING}\((K1)\)	1	SN:26340280--
6	6732-61-6240	GASKET\((K1)\)	1	SN:26340280--
7	6732-61-6330	HOSE	1	SN:26340280--
8	6737-61-6270	VALVE{CHECK}	1	SN:26340280--
9	6732-61-6190	CLAMP	2	SN:26340280--
10	6732-61-6170	COUPLING	1	SN:26340280--

Ref. A173P-01B1 Page 030190

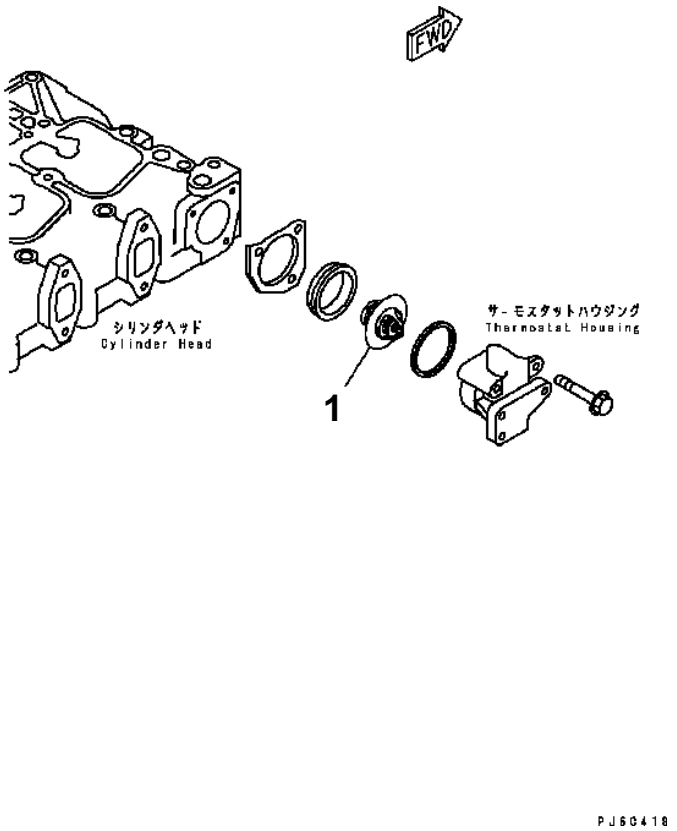

Engine SAA6D102E-2 S/N 26340280-UP

THERMOSTAT(#26295864-)

Item	Part No.	Description	Qty	Options
1	6735-61-6471	THERMOSTAT	1	SN:26295864--

Ref. A173R-01A0 Page 030200

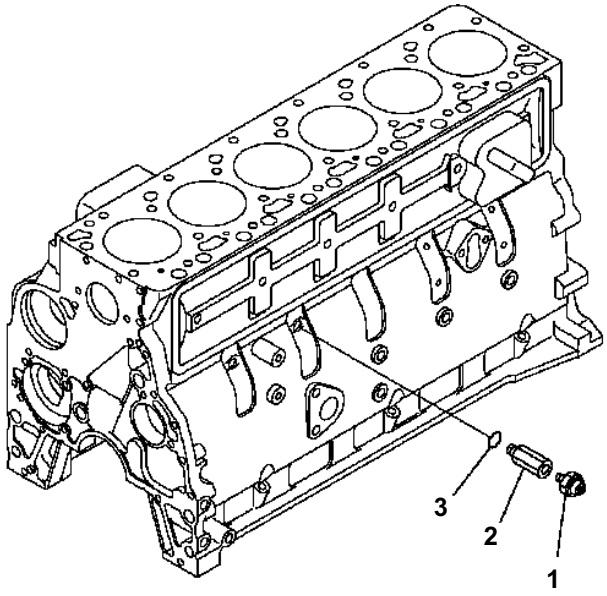

00000171

Engine SAA6D102E-2 S/N 26340280-UP

OIL PRESSURE SWITCH (#26302312-)

Item	Part No.	Description	Qty	Options
1	08073-10505	SWITCH{OIL PRESSURE}	1	SN:26302312--
2	6738-81-3170	ADAPTER	1	SN:26302312--
3	6215-81-9710	O-RING	1	SN:26302312--

Ref. A201V-01A2Z Page 030210

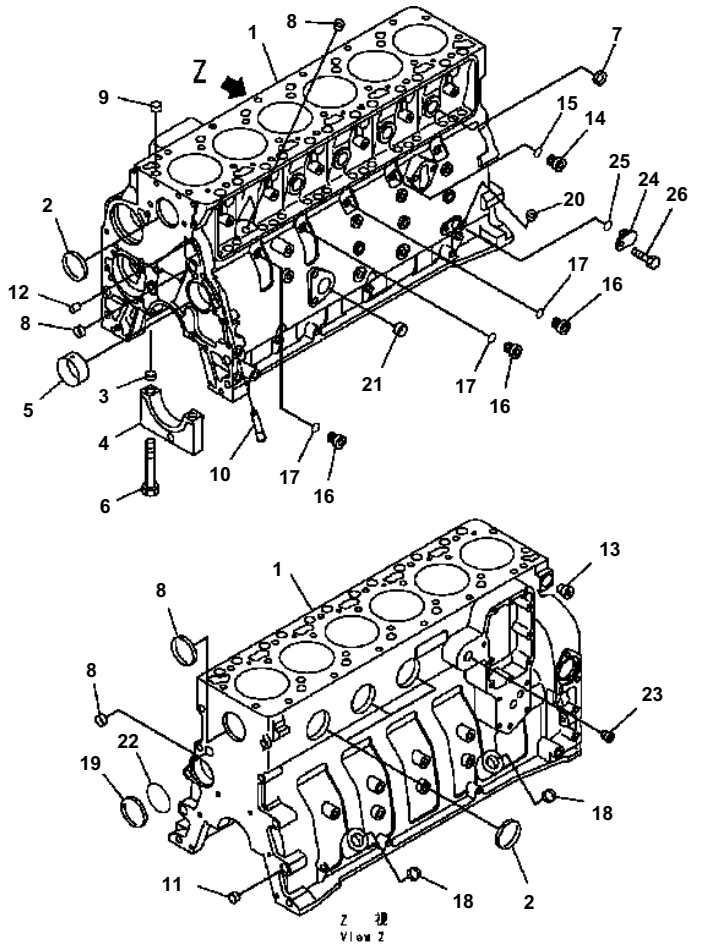

Engine SAA6D102E-2 S/N 26340280-UP

CYLINDER BLOCK

Item	Part No.	Description	Qty	Options
	6731-21-1170	CYLINDER BLOCK ASS'Y	1	SN:26274903---
	☆	· BLOCK ASS'Y	1	SN:26274903---
1	☆	· · BLOCK, CYLINDER	1	SN:26312676---
2	6732-21-1830	· · PLUG	5	SN:26274903---
3	6732-21-1910	· · RING	14	SN:26274903---
4	(△6732-21-1210)	· · CAP	7	SN:26274903---
5	6732-21-1411	· · BUSHING	1	SN:26274903---
6	6732-21-1611	· · BOLT	14	SN:26274903---
7	6732-21-1820	· · PLUG	4	SN:26274903---
8	6732-21-1812	· · PLUG, EXPANSION	3	SN:26312676---
	6731-21-1210	· BLOCK SERVICE KIT	1	SN:26274903---
9	6732-21-6140	· · RING	2	SN:26274903---
10	6731-21-1190	· · NOZZLE, PISTON COOLING	6	SN:26312676---
11	6732-21-1910	· · RING	2	SN:26274903---
12	6732-21-6120	· · PIN	2	SN:26274903---
13	6732-11-1910	· · PLUG	1	SN:26274903---
	6735-21-1910	· · PLUG ASS'Y	1	SN:26274903---
14	6735-21-1920	· · · PLUG	1	SN:26274903---
15	6735-21-1930	· · · O-RING (K2)	1	SN:26274903---
	6732-21-1960	· · PLUG ASS'Y	3	SN:26274903---
16	6215-81-9510	· · · PLUG	1	SN:26274903---
17	6215-81-9710	· · · O-RING (K2)	1	SN:26274903---
18	6735-21-5530	· · PLUG	3	SN:26274903---
19	6732-21-6130	· · PLUG	1	SN:26274903---
20	6732-21-5530	· · PLUG	3	SN:26274903---
21	6732-21-6160	· · PLUG	1	SN:26274903---
22	6732-21-1930	· · O-RING	1	SN:26274903---
23	6732-11-1920	· · PLUG	1	SN:26274903---
	6735-21-1940	· · PLUG	1	SN:26274903---
24	6735-21-1950	· · · PLUG	1	SN:26274903---
25	6735-21-1960	· · · O-RING (K2)	1	SN:26274903---
26	6732-21-3120	· · BOLT	1	SN:26274903---
		REFER TO FIG NOS OF REPAIR PARTS FOR O.S.¤ U.S.¤ AND SERVICE PARTS		

Ref. A2019-01A2 Page 030220

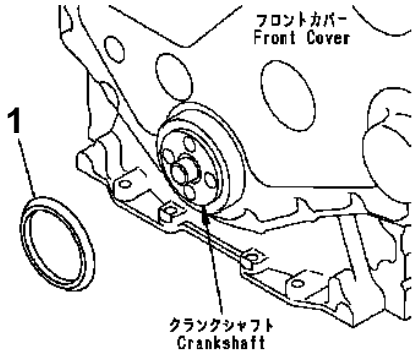

PF01682

Engine SAA6D102E-2 S/N 26340280-UP

DUST SEAL (#26277757-)

Item	Part No.	Description	Qty	Options
1	6731-81-8710	SEAL{DUST}	1	SN:26277757--

Ref. A204R-01A0 Page 030230

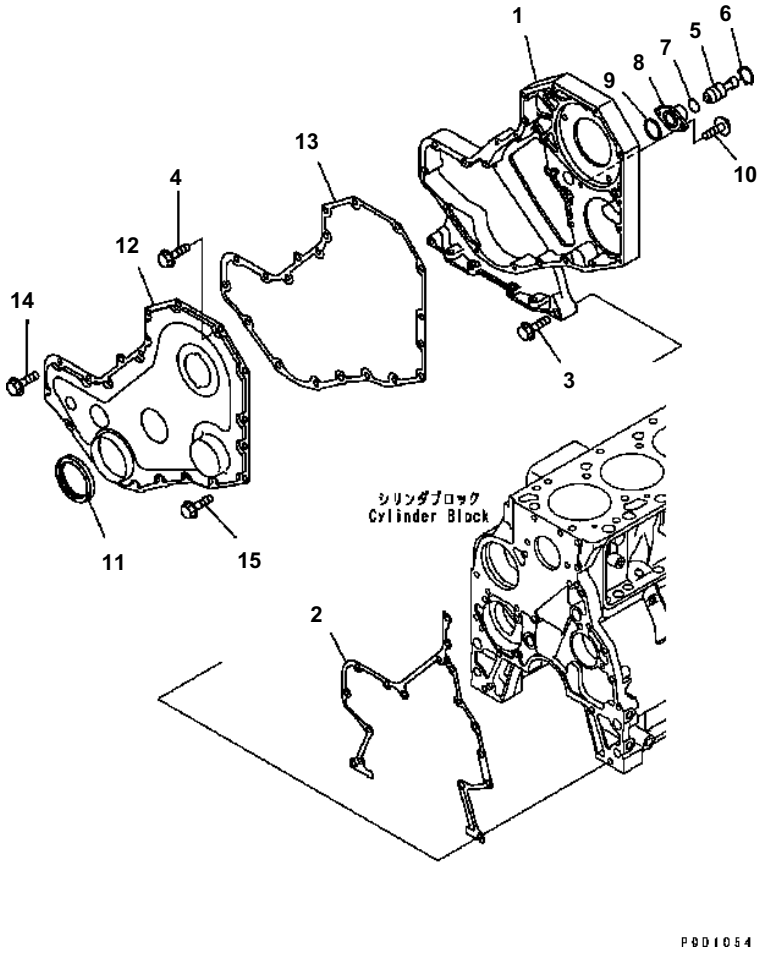

Engine SAA6D102E-2 S/N 26340280-UP

FRONT COVER

Item	Part No.	Description	Qty	Options
1	6738-21-3110	HOUSING{GEAR}	1	SN:26274903--
2	6732-21-3811	GASKET\((K2)\)	1	SN:26274903--
3	6736-21-3210	BOLT	2	SN:26274903--
4	6736-21-5310	BOLT	5	SN:26274903--
5	6732-21-3140	PIN	1	SN:26274903--
6	6732-21-3150	RING	1	SN:26274903--
7	6732-21-3870	O-RING\((K2)\)	1	SN:26274903--
8	6732-21-3180	HOUSING	1	SN:26274903--
9	6732-21-3880	GASKET\((K2)\)	1	SN:26274903--
10	6732-21-3160	BOLT	2	SN:26274903--
11	6735-21-3511	SEAL	1	SN:26274903--
12	6736-21-3310	COVER{GEAR}	1	SN:26274903--
13	6736-21-3450	GASKET\((K2)\)	1	SN:26312300--
14	6736-21-3210	BOLT	9	SN:26274903--
15	6736-21-5310	BOLT	11	SN:26274903--

Ref. A2049-01A1 Page 030240

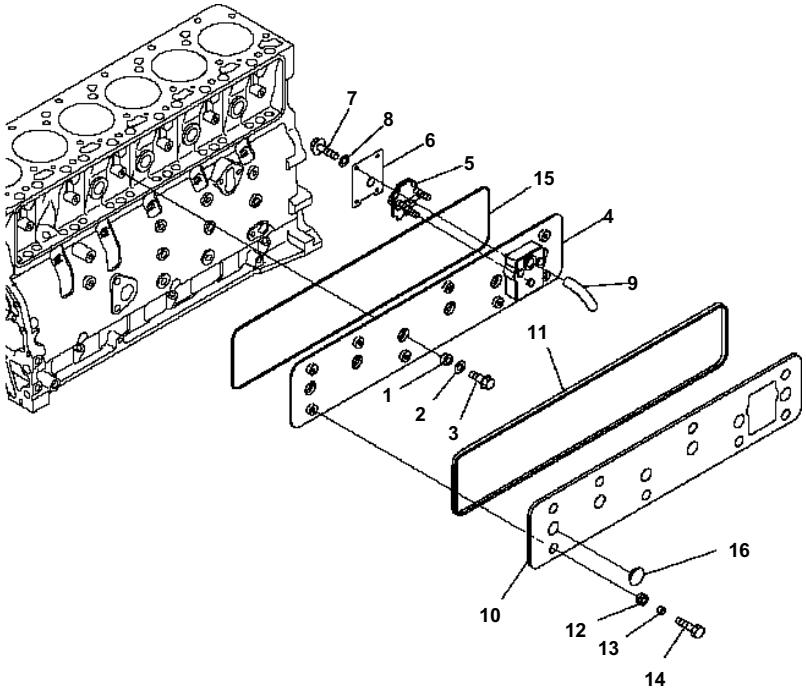

Engine SAA6D102E-2 S/N 26340280-UP

CAMFOLLOWER COVER

Item	Part No.	Description	Qty	Options
1	6732-11-8210	GASKET{SEAL}\((K2)\)	6	SN:26277761--
2	6732-11-8150	WASHER	6	SN:26277761--
3	6738-21-6280	BOLT	6	SN:26274903--
	6738-21-6100	COVER ASS'Y	1	SN:26274903--
4	(☆6738-21-6110)	・COVER	1	SN:26274903--
5	6738-21-7710	・BREATHER	1	SN:26274903--
6	6738-21-7780	・COVER	1	SN:26274903--
7	01435-00616	・BOLT	4	SN:26274903--
8	01640-20610	・WASHER	4	SN:26274903--
9	6738-21-7810	・TUBE	1	SN:26274903--
10	6738-21-6620	PANEL	1	SN:26308360--
11	6738-21-6650	GASKET\((K2)\)	1	SN:26274903--
12	6738-21-6660	GASKET\((K2)\)	8	SN:26274903--
13	6738-21-6670	SPACER	8	SN:26274903--
14	6732-71-3220	BOLT	8	SN:26274903--
15	6738-21-6180	O-RING\((K2)\)	1	SN:26274903--
16	6738-21-6680	GROMMET	6	SN:26308360--

Ref. A206P-01A7 Page 030250

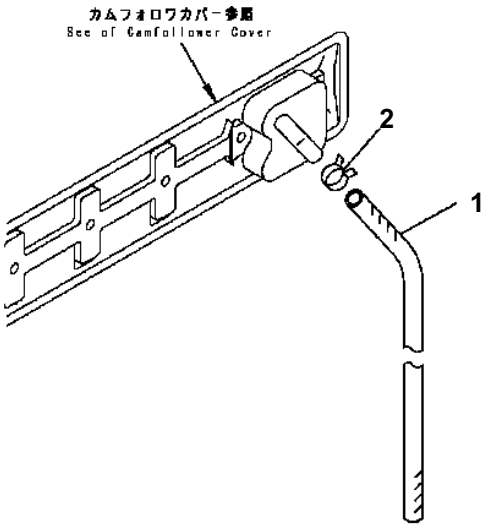

PFD1702

Engine SAA6D102E-2 S/N 26340280-UP

BREATHER HOSE (#26302312-)

Item	Part No.	Description	Qty	Options
1	07286-01990	HOSE	1	SN:26302312--
2	07285-00220	CLIP	1	SN:26302312--

Ref. A2060-01B5 Page 030260

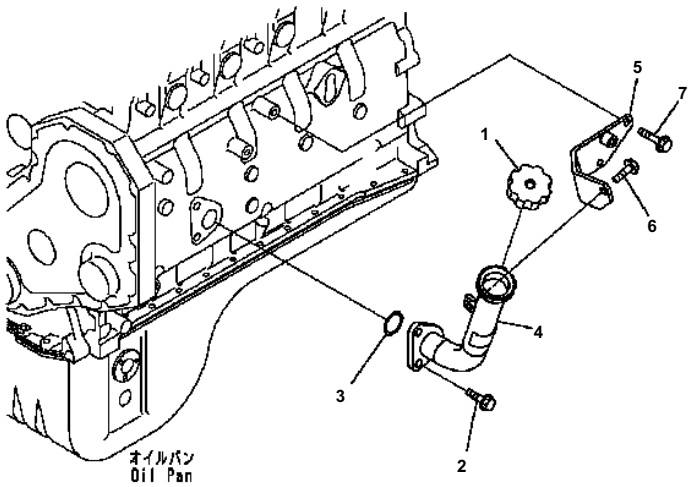

Engine SAA6D102E-2 S/N 26340280-UP

CYLINDER BLOCK COVER (OIL FILLER AND BRACKET) (#26302312-)

Item	Part No.	Description	Qty	Options
1	6136-21-7120	CAP ASS'Y	1	SN:26302312--
2	6732-51-5130	BOLT	2	SN:26302312--
3	6736-21-3360	SEAL\((K2)\)	1	SN:26302312--
4	6738-21-5130	TUBE{OIL FILLER}	1	SN:26302312--
5	6738-21-5120	BRACKET	1	SN:26302312--
6	01435-01020	BOLT	1	SN:26302312--
7	6736-21-5310	BOLT	2	SN:26302312--

Ref. A207S-01A0 Page 030270

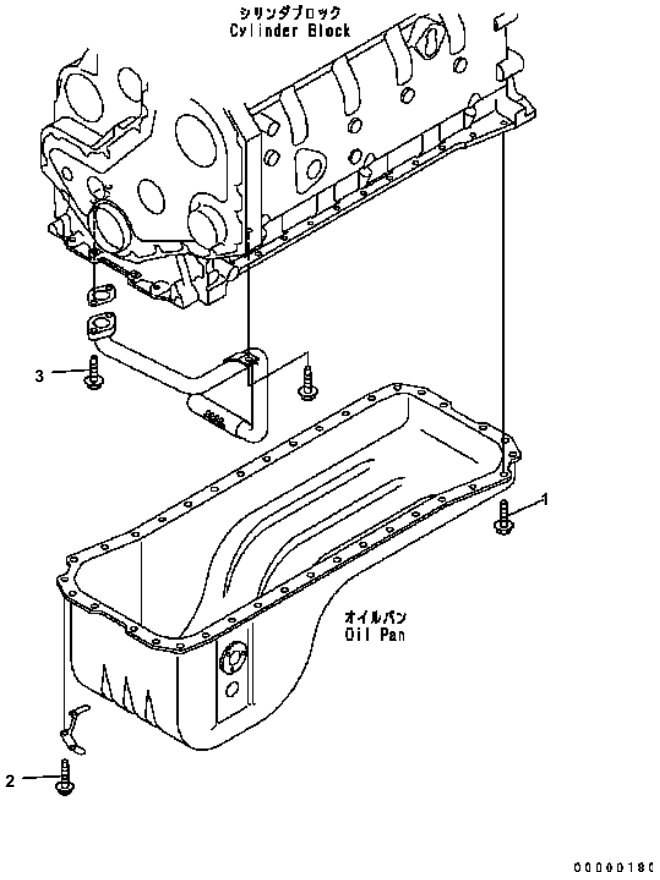

Engine SAA6D102E-2 S/N 26340280-UP

OIL PAN BOLT (#26302312-)

Item	Part No.	Description	Qty	Options
1	6732-21-6610	BOLT	33	SN:26302312--
2	6732-21-5160	BOLT	3	SN:26302312--
3	6732-21-6630	BOLT	2	SN:26302312--

Ref. A211R-01A2 Page 030280

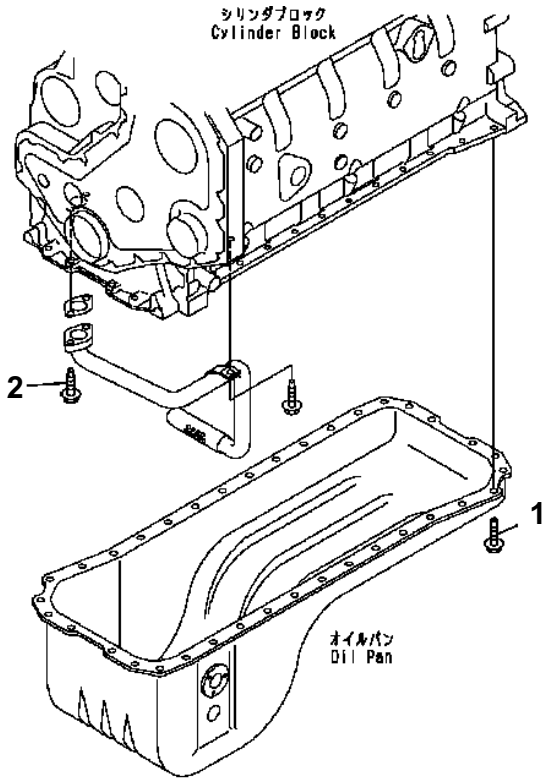

Engine SAA6D102E-2 S/N 26340280-UP

OIL PAN BOLT (COLD TERRAIN SPEC.) (#26339177-)

Item	Part No.	Description	Qty	Options
1	6732-21-6630	BOLT	36	SN:26339177--
2	6732-21-6630	BOLT	2	SN:26339177--

Ref. A211R-01A6 Page 030290

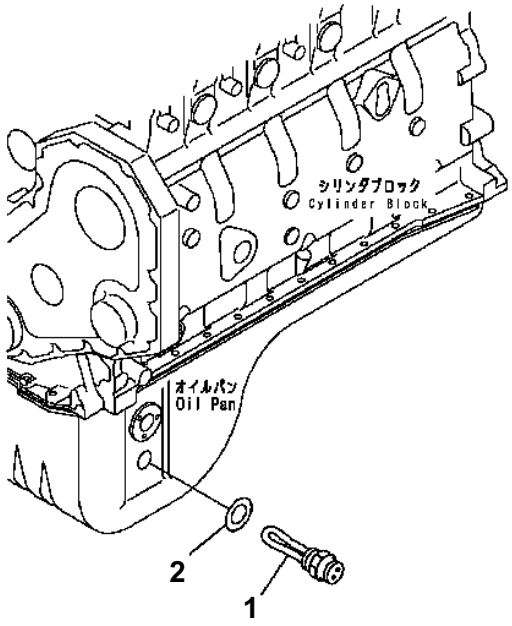

00096549

Engine SAA6D102E-2 S/N 26340280-UP

OIL PAN HEATER (COLD TERRAIN SPEC.) (#26339177-)

Item	Part No.	Description	Qty	Options
1	6734-81-5220	HEATER	1	SN:26339177--
2	6732-21-5170	GASKET	1	SN:26339177--

Ref. A211S-01A0 Page 030300

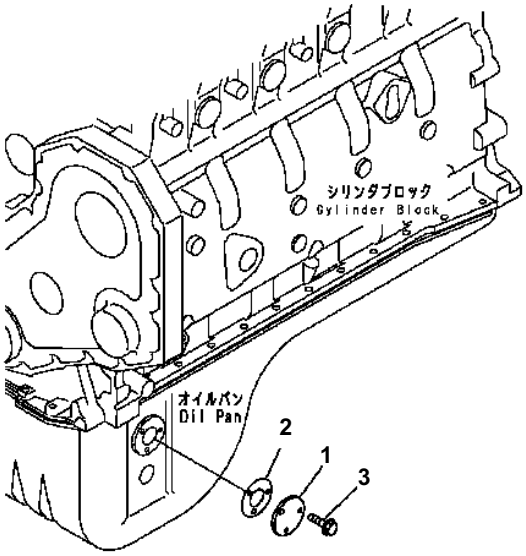

00026550

Engine SAA6D102E-2 S/N 26340280-UP

FLUID LEVEL SENSOR (WITHOUT OIL LEVER SENSOR) (#26302312-)

Item	Part No.	Description	Qty	Options
1	6136-21-5770	PLATE{COVER}	1	SN:26302312--
2	6136-21-5870	GASKET\((K2)\)	1	SN:26302312--
3	6733-71-5680	BOLT	3	SN:26302312--

Ref. A211V-01A2Z Page 030310

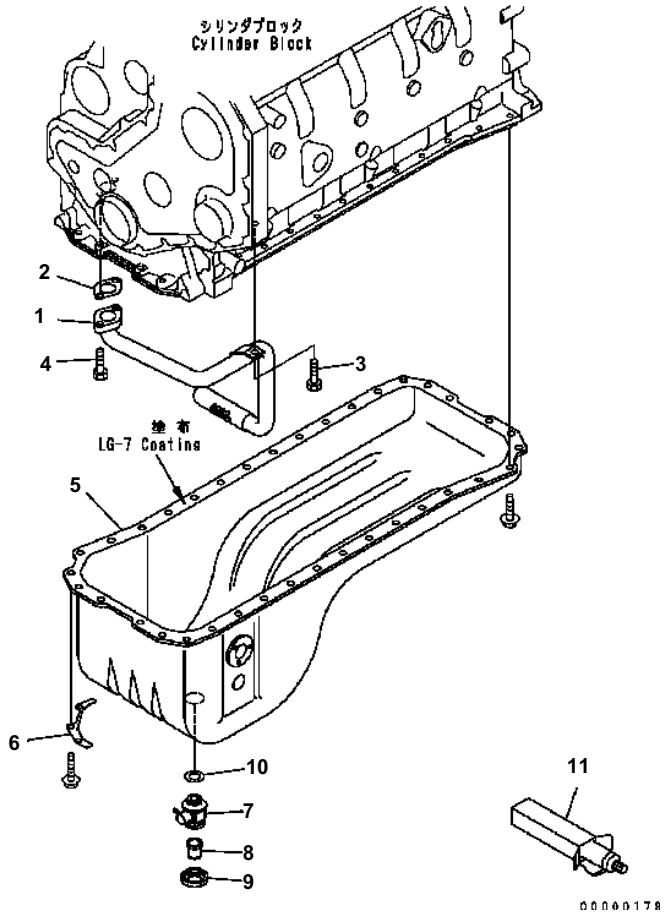

Engine SAA6D102E-2 S/N 26340280-UP

OIL PAN AND SUCTION TUBE (#26302312-)

Item	Part No.	Description	Qty	Options
1	6735-51-5531	TUBE{SUCTION}	1	SN:26302312--
2	6732-21-5510	GASKET\((K2)\)	1	SN:26302312--
3	6732-71-3220	BOLT	1	SN:26302312--
4	6732-21-6630	BOLT	2	SN:26302312--
5	6735-21-5140	PAN{OIL}	1	SN:26302312--
6	6732-21-5270	PLATE	1	SN:26302312--
	6738-21-5610	COCK ASS'Y	1	SN:26302312--
7	6738-21-5620	・ COCK	1	SN:26302312--
8	6738-21-5630	・ JOINT	1	SN:26302312--
9	6738-21-5640	・ UNION	1	SN:26302312--
10	07005-02216	GASKET\((K2)\)	1	SN:26302312--
11	09920-00150	LIQUID GASKET{LG-7¤ 150G}	AR	SN:26302312--

Ref. A2119-01B7 Page 030320

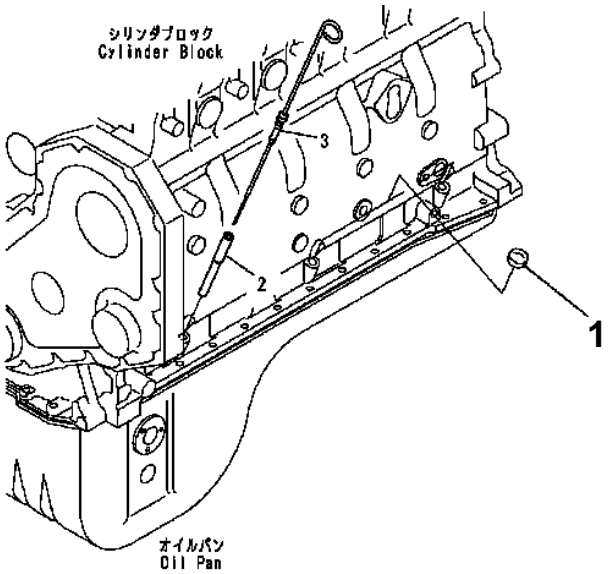

00000182

Engine SAA6D102E-2 S/N 26340280-UP

OIL LEVER GAUGE (#26302312-)

Item	Part No.	Description	Qty	Options
1	6732-21-5530	PLUG	2	SN:26302312--
2	6732-21-5480	GUIDE	1	SN:26302312--
3	6735-21-5170	GAUGE	1	SN:26302312--

Ref. A219P-01A6 Page 030330

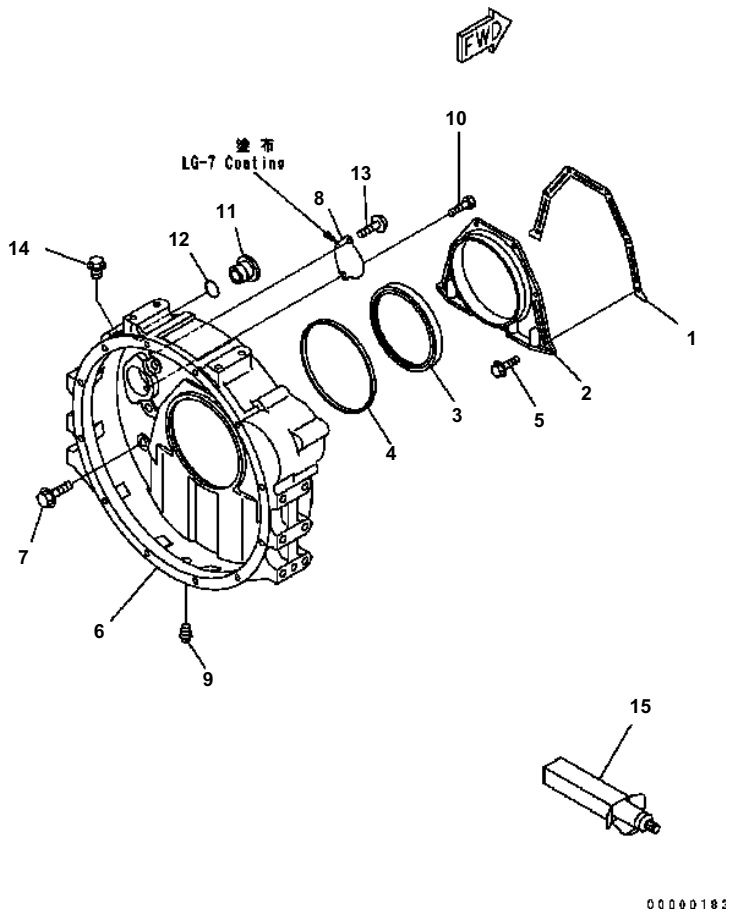

Engine SAA6D102E-2 S/N 26340280-UP

FLYWHEEL HOUSING (#26302312-)

Item	Part No.	Description	Qty	Options
1	6735-21-4191	GASKET\((K2)\)	1	SN:26302312--
2	6731-21-4240	COVER{REAR}	1	SN:26302312--
3	6735-K2-3001	SEAL	1	SN:26302312--
4	6732-21-4171	GASKET\((K2)\)	1	SN:26302312--
5	6732-21-4290	BOLT	6	SN:26302312--
6	6732-21-4232	HOUSING{FLYWHEEL}	1	SN:26302312--
7	6732-21-4220	BOLT	8	SN:26302312--
8	6732-21-4130	PLATE	1	SN:26302312--
9	02721-00813	PLUG	1	SN:26302312--
10	6732-21-4120	BOLT	2	SN:26302312--
11	6732-21-4150	PLUG	1	SN:26302312--
12	6732-21-4161	O-RING\((K2)\)	1	SN:26302312--
13	6732-21-5160	BOLT	1	SN:26302312--
14	6736-21-5320	PLUG	1	SN:26302312--
15	(09920-00150)	LIQUID GASKET{LG-7¤ 150G}	AR	SN:26302312--

Ref. A2219-01B4 Page 030340

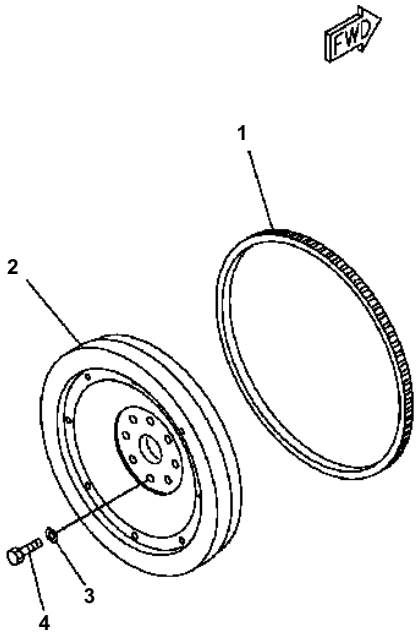

Engine SAA6D102E-2 S/N 26340280-UP

FLYWHEEL (#26302312-)

Item	Part No.	Description	Qty	Options
	6738-31-4301	FLYWHEEL ASS'Y	1	SN:26302312--
1	6732-31-4180	· GEAR{RING}	1	SN:26302312--
2	☆	· FLYWHEEL	1	SN:26302312--
3	6732-31-4120	WASHER	8	SN:26302312--
4	6732-31-4130	BOLT	8	SN:26302312--

Ref. A223P-01C0 Page 030350

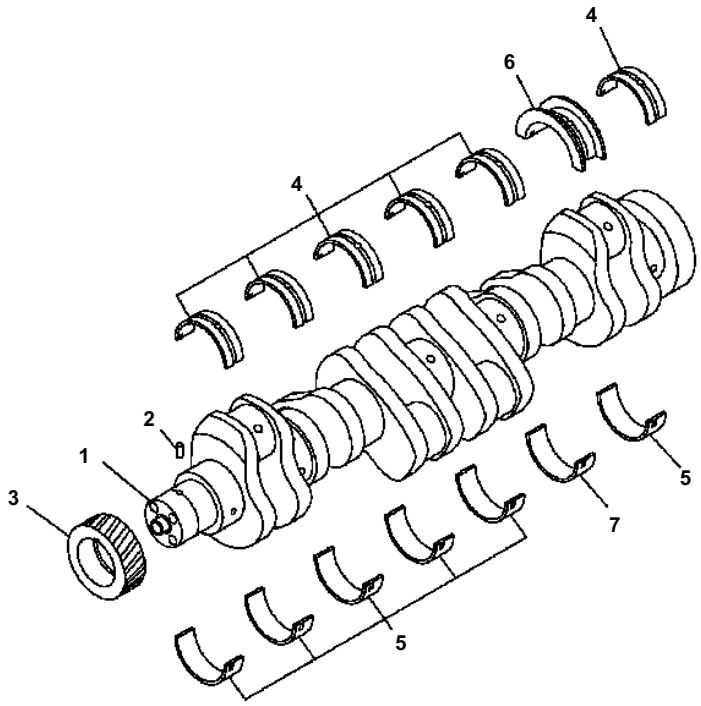

Engine SAA6D102E-2 S/N 26340280-UP

CRANKSHAFT

Item	Part No.	Description	Qty	Options
	6735-01-1310	CRANKSHAFT ASS'Y	1	SN:26274903--
1	☆	· CRANKSHAFT	1	SN:26274903--
2	6732-21-6150	· PIN	1	SN:26274903--
3	6732-31-1211	· GEAR	1	SN:26274903--
	6736-21-8110	MAIN METAL ASS'Y	6	SN:26274903--
4	☆	· METAL{UPPER}	1	SN:26274903--
5	☆	· METAL{LOWER}	1	SN:26274903--
	6736-21-8610	THRUST METAL ASS'Y	1	SN:26274903--
6	☆	· METAL{THRUST}	1	SN:26274903--
7	☆	· METAL{LOWER}	1	SN:26274903--
		REFER TO FIG NOS OF REPAIR PARTS FOR O.S.¤ U.S.¤ AND SERVICE PARTS		

Ref. A2319-01A0 Page 030360

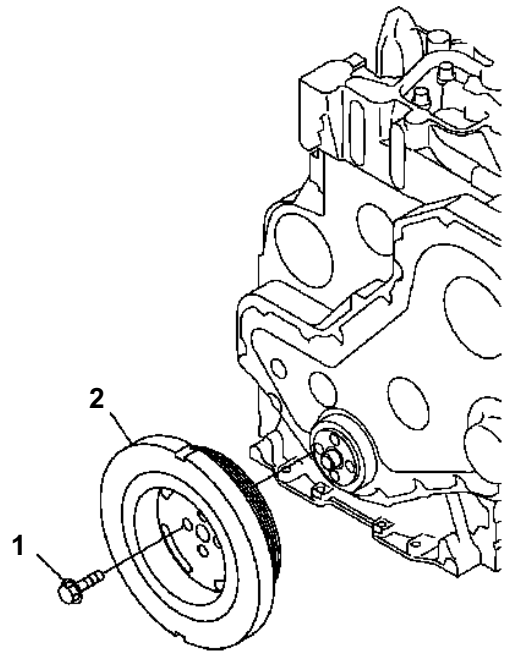

PMD1072

Engine SAA6D102E-2 S/N 26340280-UP

DAMPER

Item	Part No.	Description	Qty	Options
1	6732-31-8120	BOLT	4	SN:26274903--
2	6735-31-8120	DAMPER	1	SN:26274903--

Ref. A233P-01A0 Page 030370

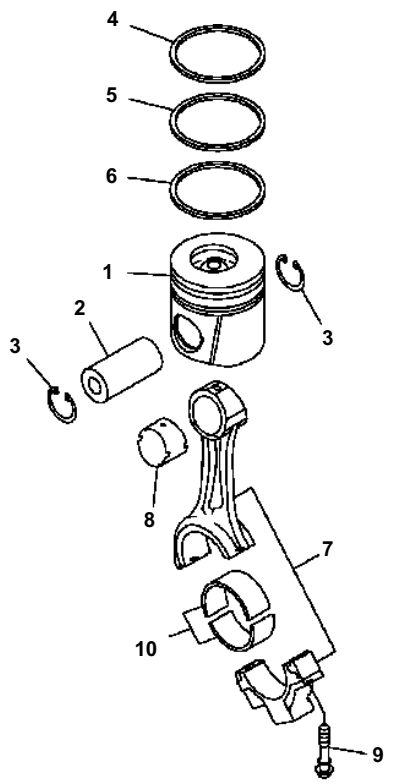

PWD0835

Engine SAA6D102E-2 S/N 26340280-UP

PISTON

Item	Part No.	Description	Qty	Options
1	6738-31-2111	PISTON	6	SN:26292269--
2	6732-31-2410	PIN	6	SN:26274903--
3	6732-31-2420	RING{SNAP}	12	SN:26274903--
	6738-31-2031	PISTON RING ASS'Y	6	SN:26292269--
4	(☆6738-31-2311)	・ RING{TOP}	1	SN:26292269--
5	(☆6738-31-2320)	・ RING{SECOND}	1	SN:26274903--
6	(☆6732-31-2350)	・ RING{OIL}	1	SN:26274903--
	6732-31-3101	CONNECTING ROD A	6	SN:26274903--
7	(☆6732-31-3111)	・ ROD	1	SN:26274903--
8	6732-31-3132	・ BUSHING	1	SN:26359095--
9	6732-31-3311	・ BOLT	2	SN:26299827--
10	6732-31-3410	METAL	12	SN:26274903--
		REFER TO FIG NOS OF REPAIR PARTS FOR O.S.¤ U.S.¤ AND SERVICE PARTS		

Ref. A2359-01A2 Page 030380

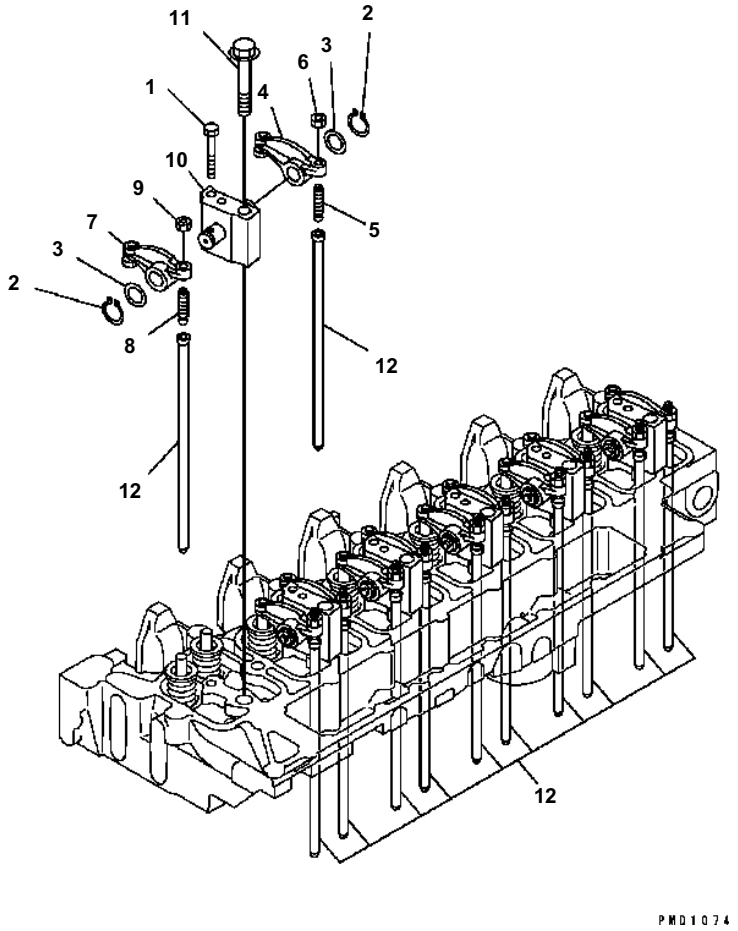

Engine SAA6D102E-2 S/N 26340280-UP

ROCKER ARM

Item	Part No.	Description	Qty	Options
1	6732-41-5180	BOLT	6	SN:26274903--
2	6732-41-5170	RING{SNAP}	12	SN:26274903--
3	6732-41-5160	WASHER	12	SN:26274903--
4	6732-41-5400	ARM ASS'Y	6	SN:26274903--
5	6735-41-5560	.SCREW	1	SN:26296416--
6	6735-41-5550	.NUT	1	SN:26274903--
7	6732-41-5200	ARM ASS'Y	6	SN:26274903--
8	6735-41-5560	.SCREW	1	SN:26296416--
9	6735-41-5550	.NUT	1	SN:26274903--
10	6736-41-5110	BRACKET ASS'Y	6	SN:26274903--
11	6732-11-1640	BOLT	6	SN:26274903--
12	6732-41-3111	ROD{PUSH}	12	SN:26274903--

Ref. A241P-01A0 Page 030390

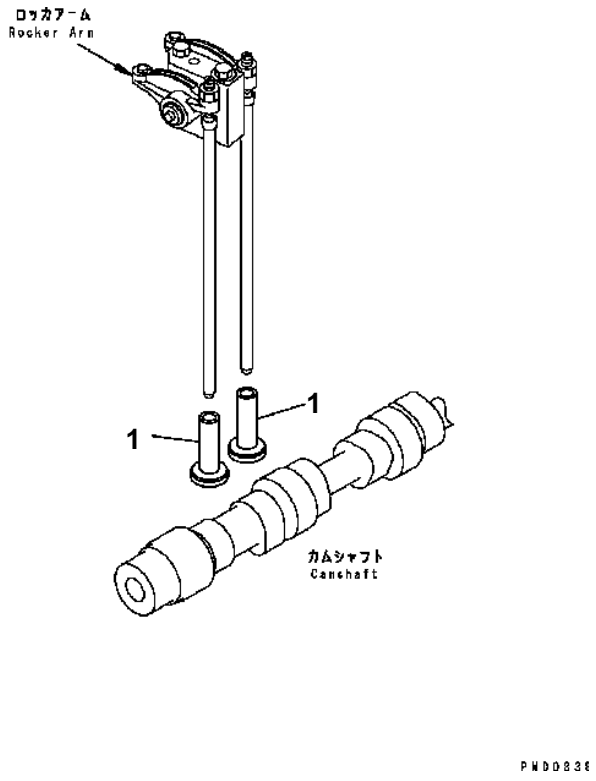

Engine SAA6D102E-2 S/N 26340280-UP

TAPPET

Item	Part No.	Description	Qty	Options
1	6732-41-2112	TAPPET	12	SN:26274903--

Ref. A241R-01A0 Page 030400

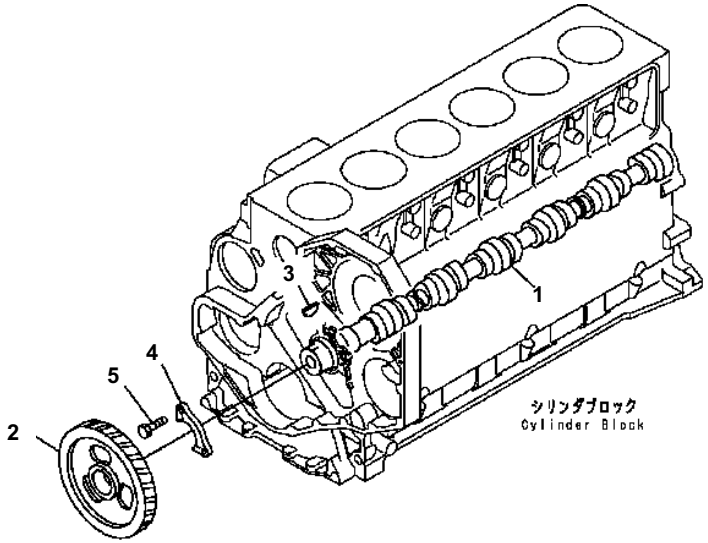

Engine SAA6D102E-2 S/N 26340280-UP

CAMSHAFT

Item	Part No.	Description	Qty	Options
1	6735-41-1111	CAMSHAFT	1	SN:26274903--
2	6732-41-1231	GEAR	1	SN:26274903--
3	6732-41-1280	KEY	1	SN:26274903--
4	6732-41-1220	SUPPORT{THRUST}	1	SN:26274903--
5	6732-41-1260	BOLT	2	SN:26274903--

Ref. A2419-01A0 Page 030410

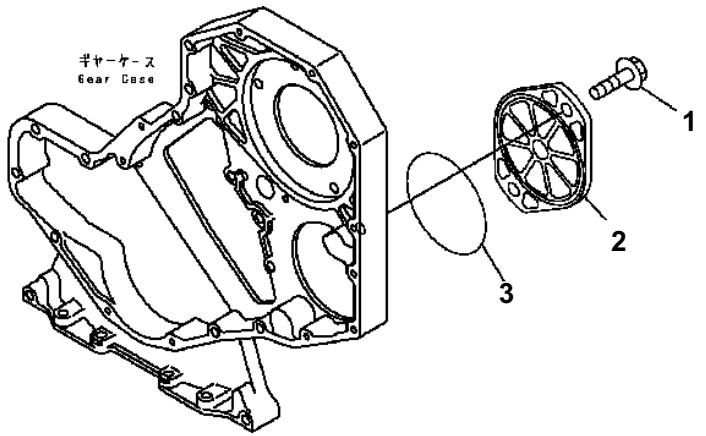

Engine SAA6D102E-2 S/N 26340280-UP

FRONT GEAR TRAIN COVER

Item	Part No.	Description	Qty	Options
1	6732-51-5130	BOLT	2	SN:26274903--
2	6732-21-9330	COVER	1	SN:26274903--
3	07000-72110	O-RING\((K2)\)	1	SN:26274903--

Ref. A261P-01A1 Page 030420

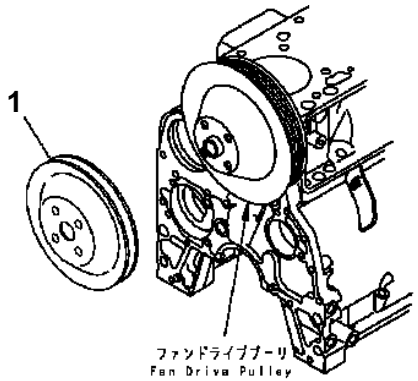

PJ6B398

Engine SAA6D102E-2 S/N 26340280-UP

FAN PULLEY

Item	Part No.	Description	Qty	Options
1	6731-91-1550	PULLEY	1	SN:26274903--

Ref. A267P-01A2Z Page 030430

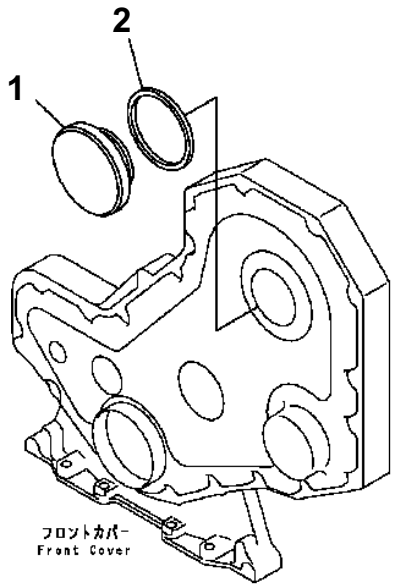

PMD1077

Engine SAA6D102E-2 S/N 26340280-UP

TACHOMETER DRIVE COVER

Item	Part No.	Description	Qty	Options
1	6732-21-3190	COVER	1	SN:26274903--
2	6732-21-3220	SEAL\((K2)\)	1	SN:26274903--

Ref. A281P-01A0 Page 030440

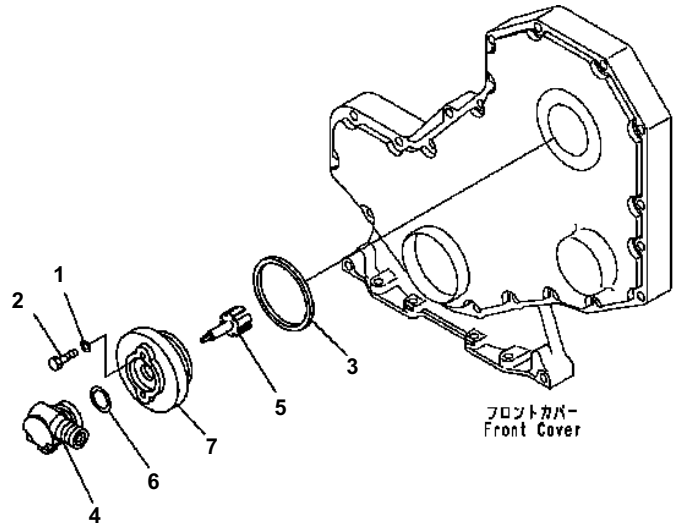

Engine SAA6D102E-2 S/N 26340280-UP

TACHOMETER ADAPTER (#26314444-)

Item	Part No.	Description	Qty	Options
1	6732-81-5250	WASHER	2	SN:26314444--
2	6735-21-3430	BOLT	2	SN:26314444--
3	6732-21-3220	SEAL	1	SN:26314444--
4	6735-21-3450	ADAPTER	1	SN:26314444--
5	6735-21-3420	HUB	1	SN:26314444--
6	6736-21-7120	SEAL	1	SN:26314444--
7	6735-21-3410	ADAPTER	1	SN:26314444--

Ref. A281P-01A1 Page 030450

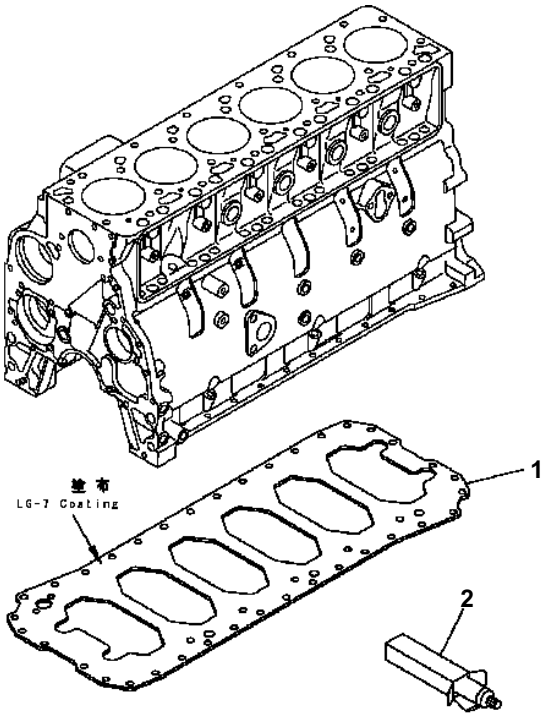

Engine SAA6D102E-2 S/N 26340280-UP

UNDER PLATE

Item	Part No.	Description	Qty	Options
1	6735-21-5151	PLATE	1	SN:26274903--
2	(09920-00150)	LIQUID GASKET{LG-7¤ 150G}	AR	SN:26274903--

Ref. A283P-01A0 Page 030460

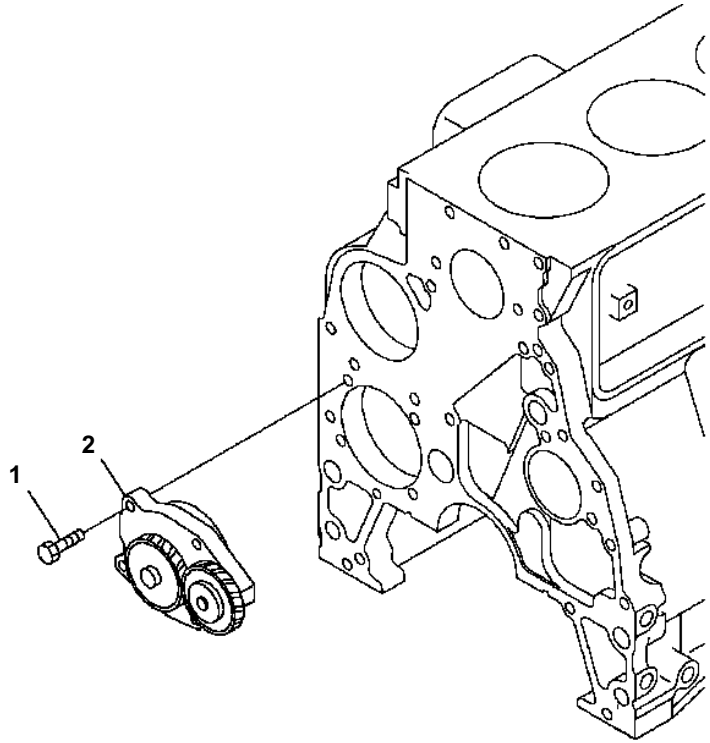

Engine SAA6D102E-2 S/N 26340280-UP

OIL PUMP

Item	Part No.	Description	Qty	Options
1	6735-51-1120	BOLT	4	SN:26274903--
2	6731-51-1111	OIL PUMP ASS'Y	1	SN:26274903--

Ref. A301P-01A2 Page 030470

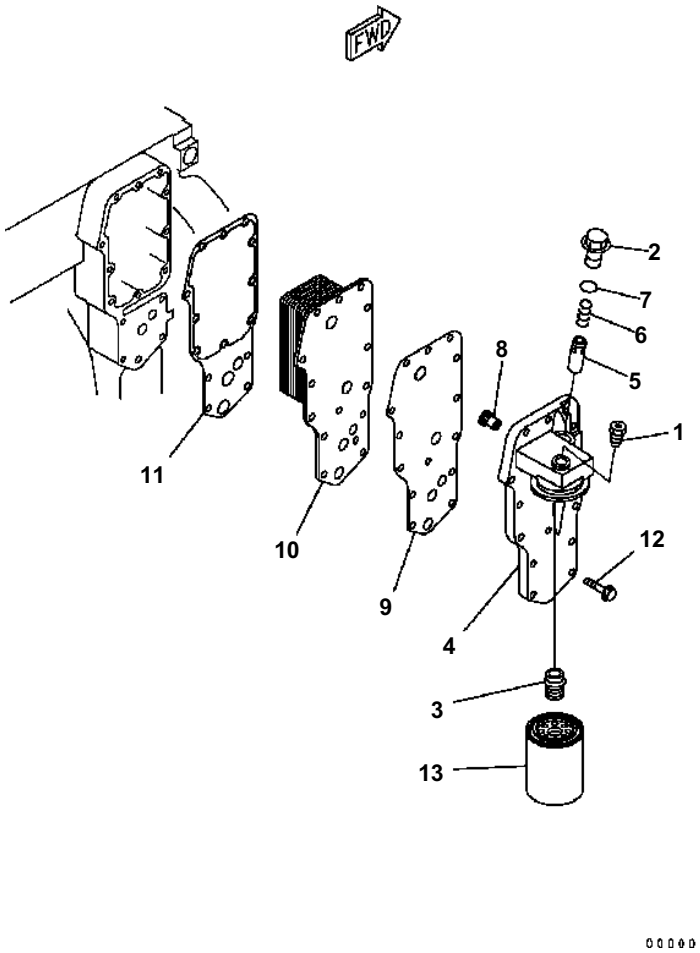

Engine SAA6D102E-2 S/N 26340280-UP

OIL COOLER AND OIL FILDER (#26302312-)

Item	Part No.	Description	Qty	Options
1	6732-11-1930	PLUG	1	SN:26302312--
2	6735-61-2140	PLUG	1	SN:26302312--
3	6736-61-5180	ADAPTER	1	SN:26302312--
4	6738-51-5120	HEAD	1	SN:26302312--
5	6735-61-2160	PLUNGER	1	SN:26302312--
6	6735-61-2190	SPRING	1	SN:26302312--
7	6732-51-4420	O-RING	1	SN:26302312--
8	6731-61-2151	VALVE	1	SN:26302312--
9	6732-51-4432	GASKET	1	SN:26302312--
10	6735-61-2110	CORE	1	SN:26302312--
11	6732-61-2311	GASKET	1	SN:26302312--
12	6732-61-6140	BOLT	14	SN:26302312--
13	6736-51-5142	CARTRIDGE	1	SN:26302312--

Ref. A331P-01B2 Page 030480

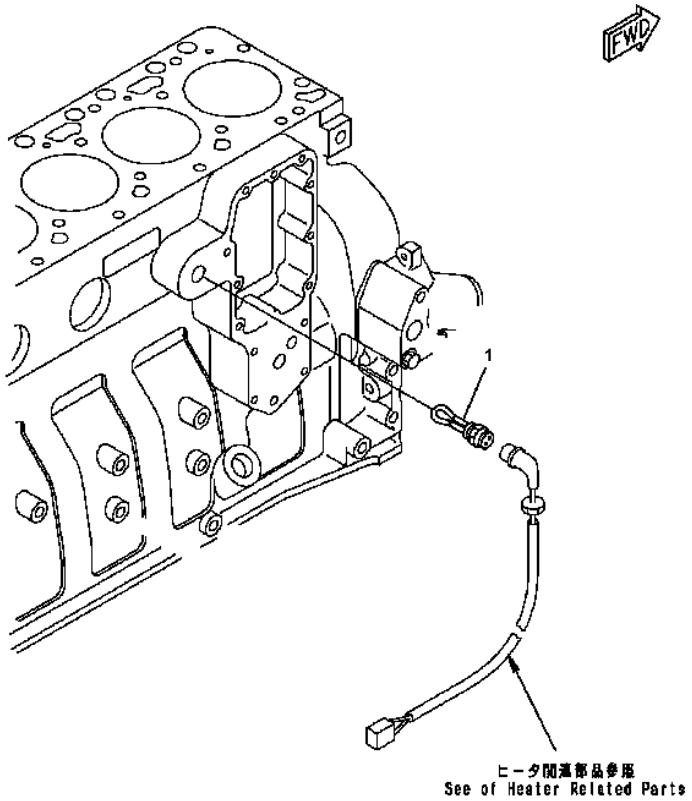

Engine SAA6D102E-2 S/N 26340280-UP

BLOCK HEATER (COLD TERRAIN SPEC.) (#26339177-)

Item	Part No.	Description	Qty	Options
1	6734-81-5240	HEATER	1	SN:26339177--

Ref. A337P-01A0 Page 030490

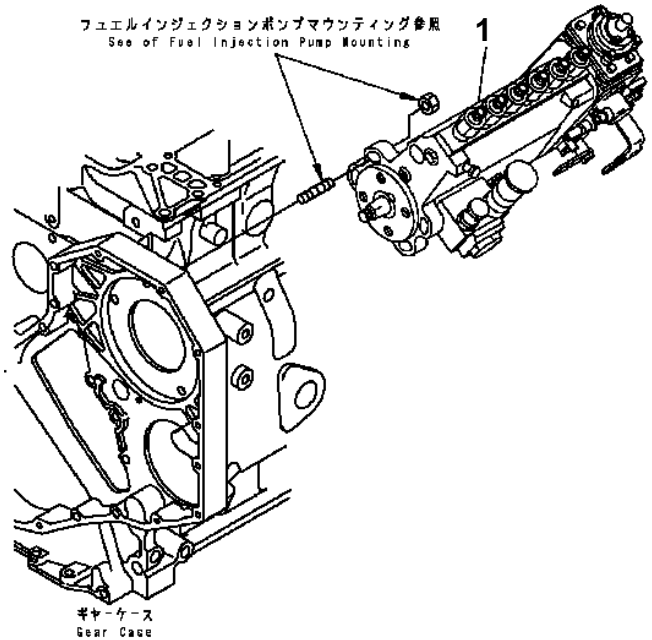

Engine SAA6D102E-2 S/N 26340280-UP

FUEL INJECTION PUMP (#26316011-)

Item	Part No.	Description	Qty	Options
1	6738-71-1170	INJECTION PUMP ASS'Y	1	SN:26316011--

Ref. A401P-01H8 Page 030500

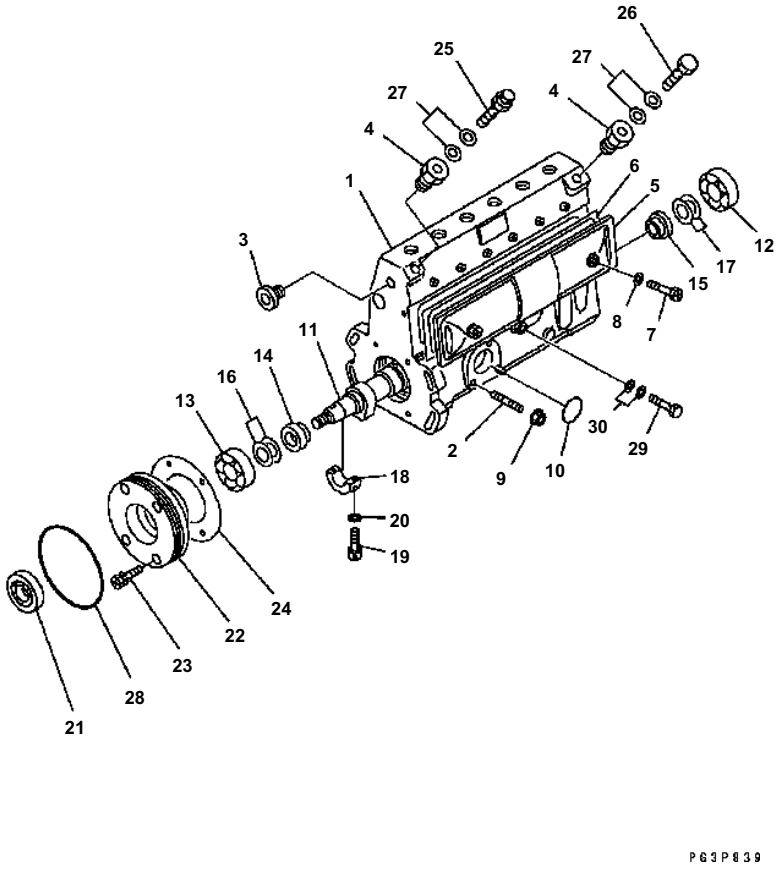

Engine SAA6D102E-2 S/N 26340280-UP

FUEL INJECTION PUMP (1/2) (INNER PARTS) (#26316011-)

Item	Part No.	Description	Qty	Options
	(6738-71-1170)	INJECTION PUMP ASS'Y	1	SN:26316011--
		THIS ASSEMBLY CONSISTS OF ALL PARTS SHOWN IN FIGS.A401P-02H8 TO A401P-07H8.		SN:26316011--
	DK101062-9340	· PUMP ASS'Y	1	SN:26316011--
		THIS ASSEMBLY CONSISTS OF ALL PARTS SHOWN IN FIGS.A401P-02H8 AND A401P-03H8.		SN:26316011--
1	DK131073-9120	· · HOUSING	1	SN:26316011--
2	DK029040-6020	· · · STUD	3	SN:26316011--
3	DK134026-0000	· · · PLUG	1	SN:26316011--
4	DK131002-2000	· · · ADAPTER	2	SN:26316011--
5	DK131028-6020	· · COVER	1	SN:26316011--
6	DK131011-0800	· · · GASKET	1	SN:26316011--
7	DK131017-1000	· · SCREW	2	SN:26316011--
8	DK029340-6020	· · GASKET	2	SN:26316011--
9	DK139206-0400	· · NUT	3	SN:26316011--
10	DK029633-1010	· · O-RING	1	SN:26316011--
11	DK131371-4900	· · CAMSHAFT	1	SN:26316011--
12	DK016630-2030	· · BEARING	AR	SN:26316011--
	DK028201-7020	· · BEARING	AR	SN:26316011--
13	DK016640-2030	· · BEARING	AR	SN:26316011--
	DK028202-0020	· · BEARING	AR	SN:26316011--
14	DK131302-1300	· · RING	1	SN:26316011--
15	DK131302-1700	· · RING	1	SN:26316011--
16	DK029312-0310	· · SHIM¤ 0.10MM	AR	SN:26316011--
	DK029312-0320	· · SHIM¤ 0.12MM	AR	SN:26316011--
	DK029312-0330	· · SHIM¤ 0.14MM	AR	SN:26316011--
	DK029312-0340	· · SHIM¤ 0.16MM	AR	SN:26316011--
	DK029312-0350	· · SHIM¤ 0.18MM	AR	SN:26316011--
	DK029312-0360	· · SHIM¤ 0.3MM	AR	SN:26316011--
	DK029312-0370	· · SHIM¤ 0.5MM	AR	SN:26316011--
	DK029312-0380	· · SHIM¤ 1.0MM	AR	SN:26316011--
17	DK029311-7010	· · SHIM¤ 0.1MM	AR	SN:26316011--
	DK029311-7020	· · SHIM¤ 0.12MM	AR	SN:26316011--
	DK029311-7030	· · SHIM¤ 0.14MM	AR	SN:26316011--
	DK029311-7040	· · SHIM¤ 0.16MM	AR	SN:26316011--
	DK029311-7050	· · SHIM¤ 0.18MM	AR	SN:26316011--
	DK029311-7090	· · SHIM¤ 0.3MM	AR	SN:26316011--
	DK029311-7060	· · SHIM¤ 0.5MM	AR	SN:26316011--

Ref. A401P-02H8 Page 030510

Engine SAA6D102E-2 S/N 26340280-UP

FUEL INJECTION PUMP (1/2) (INNER PARTS) (#26316011-)

Item	Part No.	Description	Qty	Options
	DK029311-7210	・・ SHIM¤ 0.7MM	AR	SN:26316011--
	DK029311-7070	・・ SHIM¤ 1.0MM	AR	SN:26316011--
	DK029311-7220	・・ SHIM¤ 1.4MM	AR	SN:26316011--
	DK139417-0000	・・ SHIM¤ 2.40MM	AR	SN:26316011--
18	DK131306-1000	・・ BEARING{CENTER}	1	SN:26316011--
19	DK029050-5010	・・ SCREW	2	SN:26316011--
20	DK026505-0940	・・ GASKET	2	SN:26316011--
21	DK029622-0190	・・ SEAL{OIL}	1	SN:26316011--
22	DK131330-6400	・・ COVER	1	SN:26316011--
23	DK029010-6810	・・ BOLT	4	SN:26316011--
24	DK131321-1900	・・ GASKET	1	SN:26316011--
25	DK131424-3420	・・ VALVE	1	SN:26316011--
26	DK131401-0020	・・ BOLT{EYE}	1	SN:26316011--
27	DK029341-4130	・・ GASKET	4	SN:26316011--
28	DK029637-5030	・・ O-RING	1	SN:26316011--
29	DK029731-0120	・・ BOLT{EYE}	1	
30	DK029341-0110	・・ GASKET	2	

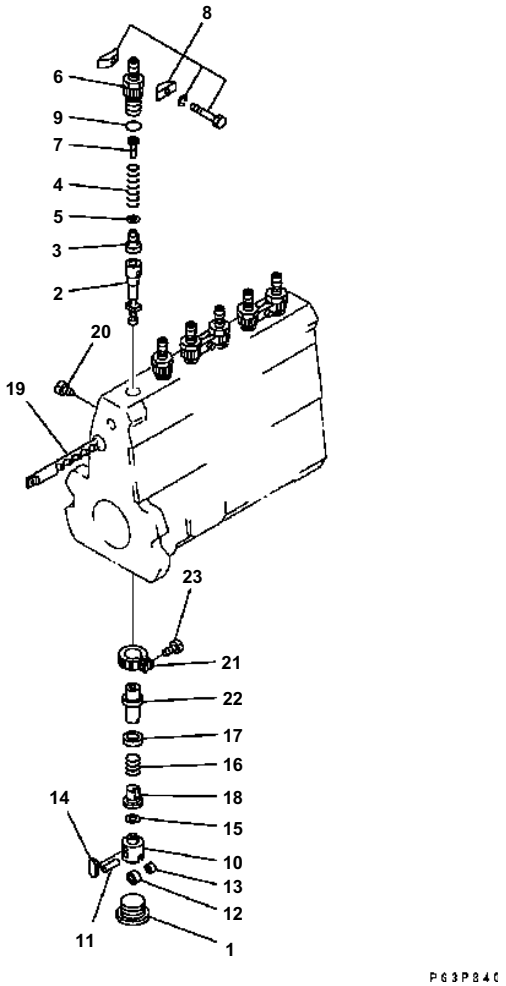

P63P840

Engine SAA6D102E-2 S/N 26340280-UP

FUEL INJECTION PUMP (2/2) (INNER PARTS) (#26316011-)

Item	Part No.	Description	Qty	Options
	(6738-71-1170)	INJECTION PUMP ASS'Y	1	SN:26316011--
		THIS ASSEMBLY CONSISTS OF ALL PARTS SHOWN IN FIGSA401P-02H8 TO A401P-07H8		SN:26316011--
	(DK101062-9340)	· PUMP ASS'Y	1	SN:26316011--
		THIS ASSEMBLY CONSISTS OF ALL PARTS SHOWN IN FIGSA401P-02H8 AND A401P-03H8		SN:26316011--
1	DK131034-1401	· · PLUG	6	SN:26316011--
2	DK131154-6520	· · PLUNGER ASS'Y	6	SN:26316011--
3	DK131110-7720	· · VALVE{DELIVERY}	6	SN:26316011--
4	DK131112-5600	· · SPRING	6	SN:26316011--
5	DK131115-1600	· · GASKET	6	SN:26316011--
6	DK131116-8420	· · HOLDER	6	SN:26316011--
7	DK131117-3100	· · STOPPER	6	SN:26316011--
8	DK131122-0520	· · PLATE ASS'Y	3	SN:26316011--
9	DK139717-0100	· · O-RING	6	SN:26316011--
10	DK131200-2820	· · TAPPET ASS'Y	6	SN:26316011--
11	DK131203-0800	· · PIN	1	SN:26316011--
12	DK131204-1000	· · ROLLER	1	SN:26316011--
13	DK131205-0500	· · BUSHING	1	SN:26316011--
14	DK131206-0200	· · GUIDE	1	SN:26316011--
15	DK029311-0580	· · SHIM¤ 02MM	AR	SN:26316011--
	DK029311-0590	· · SHIM¤ 025MM	AR	SN:26316011--
	DK029311-0020	· · SHIM¤ 030MM	AR	SN:26316011--
	DK029311-0600	· · SHIM¤ 035MM	AR	SN:26316011--
	DK029311-0030	· · SHIM¤ 040MM	AR	SN:26316011--
	DK029311-0610	· · SHIM¤ 045MM	AR	SN:26316011--
	DK029311-0040	· · SHIM¤ 050MM	AR	SN:26316011--
	DK029311-0270	· · SHIM¤ 055MM	AR	SN:26316011--
	DK029311-0050	· · SHIM¤ 06MM	AR	SN:26316011--
	DK029311-0280	· · SHIM¤ 065MM	AR	SN:26316011--
	DK029311-0060	· · SHIM¤ 07MM	AR	SN:26316011--
	DK029311-0290	· · SHIM¤ 075MM	AR	SN:26316011--
	DK029311-0070	· · SHIM¤ 08MM	AR	SN:26316011--
	DK029311-0310	· · SHIM¤ 085MM	AR	SN:26316011--
	DK029311-0080	· · SHIM¤ 09MM	AR	SN:26316011--
	DK029311-0320	· · SHIM¤ 095MM	AR	SN:26316011--
	DK029311-0090	· · SHIM¤ 10MM	AR	SN:26316011--
	DK029311-0330	· · SHIM¤ 105MM	AR	SN:26316011--

Ref. A401P-03H8 Page 030520

Engine SAA6D102E-2 S/N 26340280-UP

FUEL INJECTION PUMP (2/2) (INNER PARTS) (#26316011-)

Item	Part No.	Description	Qty	Options
	DK029311-0110	・・SHIM¤ 11MM	AR	SN:26316011--
	DK029311-0340	・・SHIM¤ 115MM	AR	SN:26316011--
	DK029311-0120	・・SHIM¤ 12MM	AR	SN:26316011--
	DK029311-0350	・・SHIM¤ 125MM	AR	SN:26316011--
	DK029311-0130	・・SHIM¤ 13MM	AR	SN:26316011--
	DK029311-0620	・・SHIM¤ 135MM	AR	SN:26316011--
	DK029311-0140	・・SHIM¤ 14MM	AR	SN:26316011--
	DK029311-0630	・・SHIM¤ 145MM	AR	SN:26316011--
	DK029311-0490	・・SHIM¤ 15MM	AR	SN:26316011--
	DK029311-0710	・・SHIM¤ 155MM	AR	SN:26316011--
	DK029311-0500	・・SHIM¤ 16MM	AR	SN:26316011--
16	DK131215-2500	・・SPRING	6	SN:26316011--
17	DK131216-0100	・・SEAT{SPRING}	6	SN:26316011--
18	DK131217-0200	・・SEAT{SPRING}	6	SN:26316011--
19	DK131256-0900	・・RACK{CONTROL}	1	SN:26316011--
20	DK131226-0300	・・SCREW	1	SN:26316011--
21	DK131240-0100	・・PINION	6	SN:26316011--
22	DK131241-0100	・・SLEEVE{CONTROL}	6	
23	DK131242-0100	・・SCREW	6	

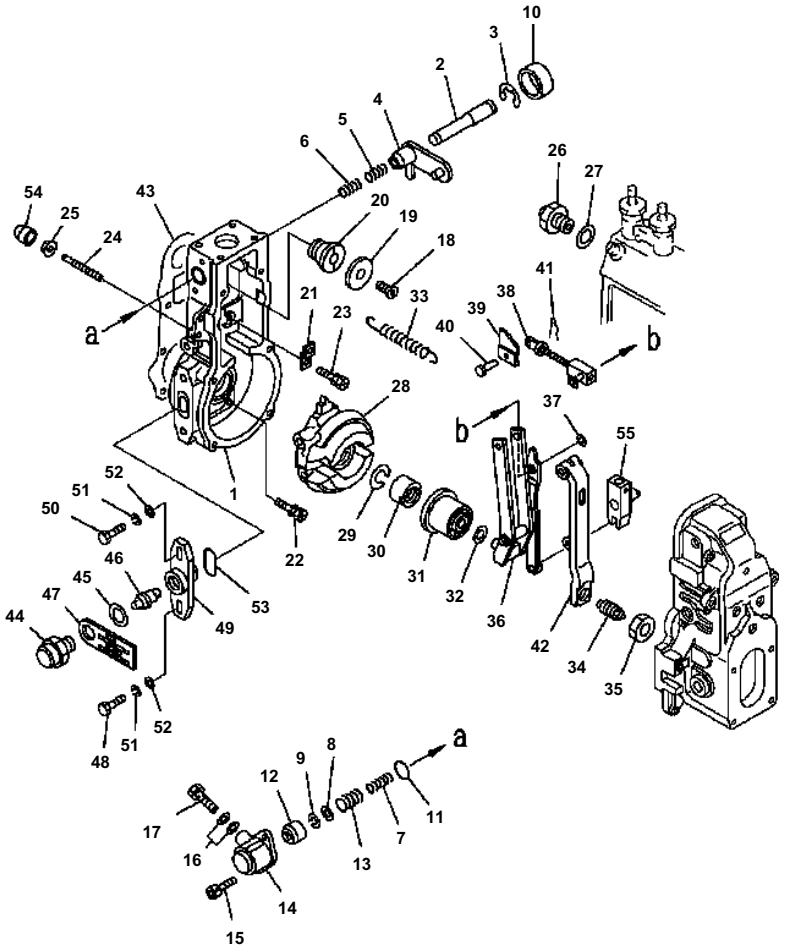

Engine SAA6D102E-2 S/N 26340280-UP

FUEL INJECTION PUMP (GOVERNOR) (1/3) (INNER PARTS) (#26316011-)

Item	Part No.	Description	Qty	Options
	(6738-71-1170)	INJECTION PUMP ASS'Y	1	SN:26316011--
		THIS ASSEMBLY CONSISTS OF ALL PARTS SHOWN IN FIGSA401P-02H8 TO A401P-07H8		SN:26316011--
	DK105404-5980	· GOVERNOR ASS'Y	1	SN:26316011--
		THIS ASSEMBLY CONSISTS OF ALL PARTS SHOWN IN FIGSA401P-04H8 TO A401P-06H8		SN:26316011--
	DK154620-0820	· · HOUSING ASS'Y	1	SN:26316011--
1	DK154620-0020	· · · HOUSING	1	SN:26316011--
2	DK154621-3701	· · · SHAFT	1	SN:26316011--
3	DK016010-0740	· · · RING{SNAP}	1	SN:26316011--
4	DK154415-3320	· · · LEVER	1	SN:26316011--
5	DK154415-3400	· · · SPRING	1	SN:26316011--
6	DK154621-3800	· · · SPRING	1	SN:26316011--
7	DK154621-4400	· · · SPRING	1	SN:26316011--
8	DK139406-1400	· · · SHIM	1	SN:26316011--
9	DK160100-0540	· · · RING{SNAP}	1	SN:26316011--
10	DK154621-3600	· · · CAP	1	SN:26316011--
11	DK016520-2210	· · · O-RING	1	SN:26316011--
12	DK154621-3500	· · · BUSHING	1	SN:26316011--
13	DK154621-3900	· · · SPRING	1	SN:26316011--
14	DK154620-1600	· · · COVER	1	SN:26316011--
15	DK010235-1640	· · · BOLT{SOCKET}	2	SN:26316011--
16	DK029341-0110	· · · GASKET	2	SN:26316011--
17	DK029731-0120	· · · BOLT{EYE}	1	SN:26316011--
18	DK154621-4300	· · BOLT	1	SN:26316011--
19	DK154621-4100	· · WASHER	1	SN:26316011--
20	DK154620-7900	· · ADAPTER	1	SN:26316011--
21	DK154375-9020	· · PLATE	1	SN:26316011--
22	DK029010-6810	· · BOLT	5	SN:26316011--
23	DK020106-1840	· · BOLT	1	SN:26316011--
24	DK154013-6000	· · SCREW	1	SN:26316011--
25	DK154011-4900	· · NUT{LOCK}	1	SN:26316011--
26	DK155404-5120	· · LIMITER	1	SN:26316011--
27	DK026518-2240	· · GASKET	1	SN:26316011--
28	DK154621-2120	· · FLYWEIGHT ASS'Y	1	SN:26316011--
29	DK029321-2020	· · WASHER{SPRING}	1	SN:26316011--
30	DK029231-2030	· · NUT	1	SN:26316011--
31	DK154123-2320	· · SLEEVE	1	SN:26316011--

Ref. A401P-04H8 Page 030530

Engine SAA6D102E-2 S/N 26340280-UP

FUEL INJECTION PUMP (GOVERNOR) (1/3) (INNER PARTS) (#26316011-)

Item	Part No.	Description	Qty	Options
32	DK029311-0010	・・ SHIM¤ 020MM	AR	SN:26316011--
	DK029311-0180	・・ SHIM¤ 030MM	AR	SN:26316011--
	DK029311-0190	・・ SHIM¤ 040MM	AR	SN:26316011--
	DK139410-0000	・・ SHIM¤ 050MM	AR	SN:26316011--
	DK029311-0210	・・ SHIM¤ 100MM	AR	SN:26316011--
	DK139410-0100	・・ SHIM¤ 150MM	AR	SN:26316011--
	DK139410-3000	・・ SHIM¤ 200MM	AR	SN:26316011--
	DK139410-3100	・・ SHIM¤ 300MM	AR	SN:26316011--
	DK139410-3200	・・ SHIM¤ 400MM	AR	SN:26316011--
33	DK154154-5200	・・ SPRING	1	SN:26316011--
34	DK154177-0620	・・ CAPSULE{SPRING}	1	SN:26316011--
35	DK029201-6010	・・ NUT	1	SN:26316011--
36	DK154218-1620	・・ GUIDE LEVER ASS'Y	1	SN:26316011--
37	DK016010-0540	・・ RING{SNAP}	1	SN:26316011--
38	DK154235-4720	・・ LINK	1	SN:26316011--
39	DK154232-3200	・・ CONNECTOR	1	SN:26316011--
40	DK154222-5800	・・ PIN	1	SN:26316011--
41	DK155402-3800	・・ PIN	1	SN:26316011--
42	DK154236-4100	・・ LEVER	1	SN:26316011--
43	DK154390-0000	・・ GASKET	1	SN:26316011--
44	DK154621-3000	・・ PLUG	1	SN:26316011--
45	DK026518-2240	・・ GASKET	1	SN:26316011--
46	DK154620-8800	・・ PIN	1	SN:26316011--
47	DK154620-8901	・・ PLATE	1	SN:26316011--
48	DK010038-1840	・・ BOLT	1	SN:26316011--
49	DK154620-1500	・・ FLANGE	1	SN:26316011--
50	DK154620-4700	・・ BOLT	1	SN:26316011--
51	DK014110-8440	・・ WASHER{SPRING}	2	SN:26316011--
52	DK014010-8140	・・ WASHER	2	SN:26316011--
53	DK154621-3200	・・ O-RING	1	SN:26316011--
54	DK154062-3520	・・ CAP	1	
55	DK154326-5120	・・ LEVER ASS'Y	1	

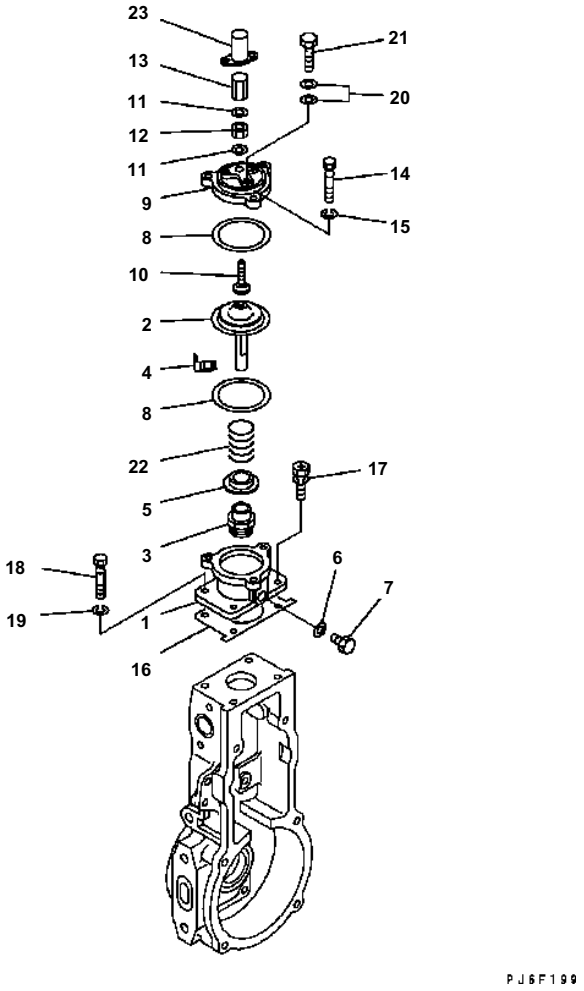

Engine SAA6D102E-2 S/N 26340280-UP

FUEL INJECTION PUMP (GOVERNOR) (2/3) (INNER PARTS) (#26366011-)

Item	Part No.	Description	Qty	Options
	(6738-71-1170)	INJECTION PUMP ASS'Y THIS ASSEMBLY CONSISTS OF ALL PARTS SHOWN IN FIGSA401P-02H8 TO A401P-07H8	1	SN:26316011--
	(DK105404-5980)	· GOVERNOR ASS'Y THIS ASSEMBLY CONSISTS OF ALL PARTS SHOWN IN FIGSA401P-04H8 TO A401P-06H8	1	SN:26316011--
	DK154422-7820	· · BOOST COMPENSATOR	1	SN:26316011--
1	DK154422-7101	· · · HOUSING	1	SN:26316011--
2	DK154400-9520	· · · DIAGRAM	1	SN:26316011--
3	DK154415-1200	· · · BUSHING	1	SN:26316011--
4	DK146711-0000	· · · PLATE	1	SN:26316011--
5	DK154415-1300	· · · NUT	1	SN:26316011--
6	DK029331-2130	· · · GASKET	1	SN:26316011--
7	DK029111-2090	· · · PLUG	1	SN:26316011--
8	DK154413-2600	· · · GASKET	2	SN:26316011--
9	DK154404-5600	· · · COVER	1	SN:26316011--
10	DK154415-1800	· · · SCREW	1	SN:26316011--
11	DK026506-1040	· · · GASKET	2	SN:26316011--
12	DK013030-6040	· · · NUT	1	SN:26316011--
13	DK154035-1600	· · · NUT	1	SN:26316011--
14	DK154062-2900	· · · BOLT	3	SN:26316011--
15	DK014110-6440	· · · WASHER{SPRING}	3	SN:26316011--
16	DK154620-3200	· · · GASKET	1	SN:26316011--
17	DK020106-1640	· · · BOLT	3	SN:26316011--
18	DK154062-5001	· · · BOLT	1	SN:26316011--
19	DK014110-6440	· · · WASHER{SPRING}	1	SN:26316011--
20	DK029341-0110	· · · GASKET	2	SN:26316011--
21	DK029731-0120	· · · BOLT{EYE}	1	SN:26316011--
22	DK154411-7300	· · · · SPRING	1	
23	DK154062-2720	· · · · CAP	1	

Ref. A401P-05H8 Page 030540

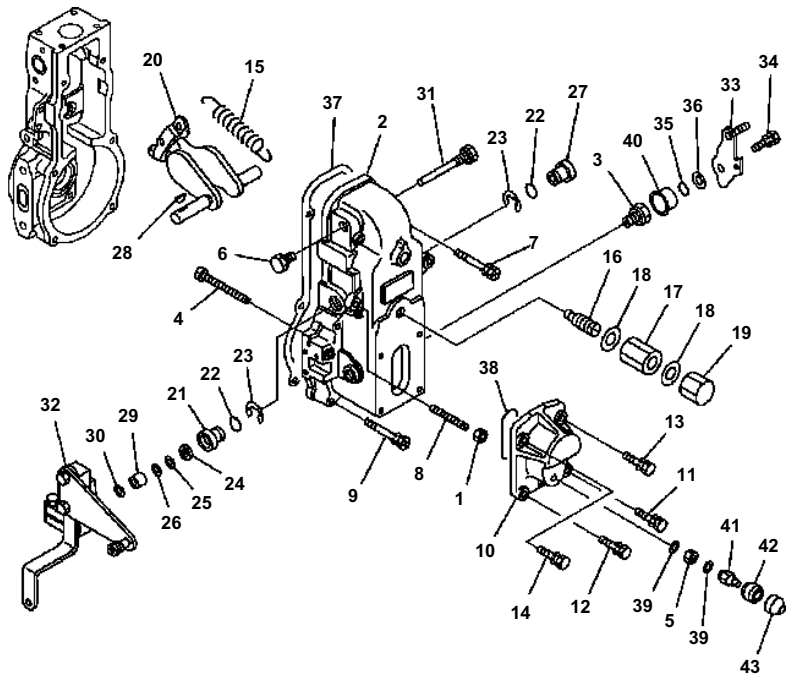

Engine SAA6D102E-2 S/N 26340280-UP

FUEL INJECTION PUMP(GOVERNOR) (3/3) (INNER PARTS) (#26316011-)

Item	Part No.	Description	Qty	Options
	(6738-71-1170)	INJECTION PUMP ASS'Y THIS ASSEMBLY CONSISTS OF ALL PARTS SHOWN IN FIGSA401P-02H8 TO A401P-07H8	1	SN:26316011--
	(DK105404-5980)	· GOVERNOR ASS'Y THIS ASSEMBLY CONSISTS OF ALL PARTS SHOWN IN FIGSA401P-04H8 TO A401P-06H8	1	SN:26316011--
1	DK154011-0100	· · NUT{LOCK}	1	SN:26316011--
2	DK154500-8020	· · COVER	1	SN:26316011--
3	DK154321-0400	· · BUSHING	1	SN:26316011--
4	DK154031-4700	· · SCREW	1	SN:26316011--
5	DK139208-0400	· · NUT	1	SN:26316011--
6	DK154036-0300	· · PLUG	1	SN:26316011--
7	DK139006-7100	· · BOLT	2	SN:26316011--
8	DK154010-0200	· · SCREW	1	SN:26316011--
9	DK020106-3840	· · BOLT	4	SN:26316011--
10	DK154063-8400	· · COVER	1	SN:26316011--
11	DK020006-1640	· · BOLT	1	SN:26316011--
12	DK020006-1640	· · BOLT	1	SN:26316011--
13	DK020006-1640	· · BOLT	1	SN:26316011--
14	DK020006-1640	· · BOLT	1	SN:26316011--
15	DK154150-0400	· · SPRING{GOVERNOR}	1	SN:26316011--
16	DK154158-1220	· · CAPSULE{SPRING}	1	SN:26316011--
17	DK154011-1700	· · NUT	1	SN:26316011--
18	DK026512-1540	· · GASKET	2	SN:26316011--
19	DK154159-1200	· · NUT{CAP}	1	SN:26316011--
20	DK154200-7020	· · LEVER ASS'Y{SWIVEL}	1	SN:26316011--
21	DK154204-4300	· · BUSHING	1	SN:26316011--
22	DK029631-8020	· · O-RING	2	SN:26316011--
23	DK016010-1640	· · RING{SNAP}	2	SN:26316011--
24	DK139611-0000	· · SEAL{OIL}	1	SN:26316011--
25	DK139411-0000	· · SHIM¤ 040MM	1	SN:26316011--
26	DK029311-1070	· · SHIM¤ 050MM	AR	SN:26316011--
27	DK154204-4400	· · BUSHING	1	SN:26316011--
28	DK025803-1310	· · KEY¤ 13MM	1	SN:26316011--
29	DK154206-2800	· · COLLAR	1	SN:26316011--
30	DK154206-0200	· · WASHER¤ 10MM	AR	SN:26316011--
31	DK154237-1100	· · PIN	1	SN:26316011--
32	DK154396-8020	· · LEVER	1	SN:26316011--

Ref. A401P-06H8 Page 030550

Engine SAA6D102E-2 S/N 26340280-UP

FUEL INJECTION PUMP(GOVERNOR) (3/3) (INNER PARTS) (#26316011-)

Item	Part No.	Description	Qty	Options
33	DK154382-3720	・・ LEVER	1	SN:26316011--
34	DK020006-1840	・・ BOLT	1	SN:26316011--
35	DK029631-0030	・・ O-RING	1	SN:26316011--
36	DK029311-0220	・・ SHIM¤ 02MM	AR	SN:26316011--
	DK029311-0230	・・ SHIM¤ 05MM	AR	SN:26316011--
37	DK154390-0300	・・ GASKET	1	SN:26316011--
38	DK029635-2020	・・ O-RING	1	SN:26316011--
39	DK026508-1140	・・ GASKET	2	SN:26316011--
40	DK154322-0600	・・ CAP	1	SN:26316011--
41	DK154035-2900	・・ NUT{CAP}	1	SN:26316011--
42	DK154062-3900	・・ ADAPTER	1	
43	DK154062-4020	・・ CAP	1	

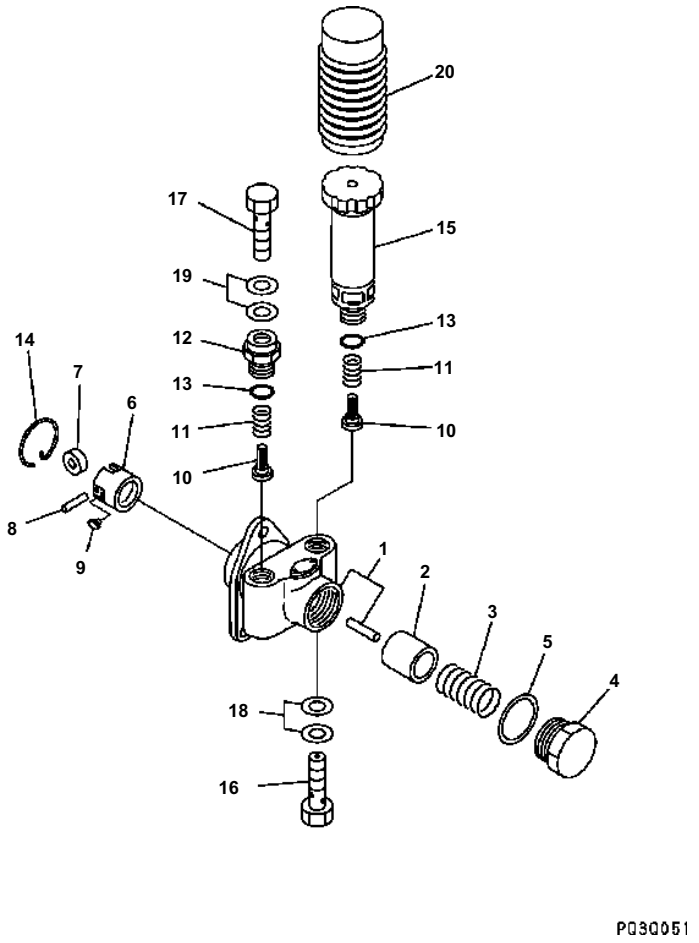

Engine SAA6D102E-2 S/N 26340280-UP

FUEL INJECTION PUMP (FEED PUMP) (INNER PARTS) (#26316011-)

Item	Part No.	Description	Qty	Options
	(6738-71-1170)	INJECTION PUMP ASS'Y	1	SN:26316011--
		THIS ASSEMBLY CONSISTS OF ALL PARTS SHOWN IN FIGSA401P-02H8 TO A401P-07H8		SN:26316011--
	DK105220-5960	· FEED PUMP ASS'Y	1	SN:26316011--
1	DK152003-1020	· HOUSING	1	SN:26316011--
2	DK152100-1120	· PISTON	1	SN:26316011--
3	DK152102-1600	· SPRING	1	SN:26316011--
4	DK152105-1600	· PLUG	1	SN:26316011--
5	DK029332-6030	· GASKET	1	SN:26316011--
6	DK152111-2820	· TAPPET ASS'Y	1	SN:26316011--
7	DK152112-0100	· · ROLLER	1	SN:26316011--
8	DK152113-0700	· · PIN	1	SN:26316011--
9	DK152114-0400	· · GUIDE	2	SN:26316011--
10	DK152115-0500	· VALVE	2	SN:26316011--
11	DK152116-0200	· SPRING	2	SN:26316011--
12	DK152118-0900	· ADAPTER	1	SN:26316011--
13	DK029631-6060	· O-RING	2	SN:26316011--
14	DK152121-0200	· RING{SNAP}	1	SN:26316011--
15	DK152200-5420	· PUMP{PRIMING}	1	SN:26316011--
16	DK152300-5920	· BOLT{JOINT}	1	SN:26316011--
17	DK029731-4680	· BOLT{JOINT}	1	SN:26316011--
18	DK029341-4130	· GASKET	2	SN:26316011--
19	DK029341-4130	· GASKET	2	SN:26316011--
20	DK152320-0100	· COVER	1	

Ref. A401P-07H8 Page 030560

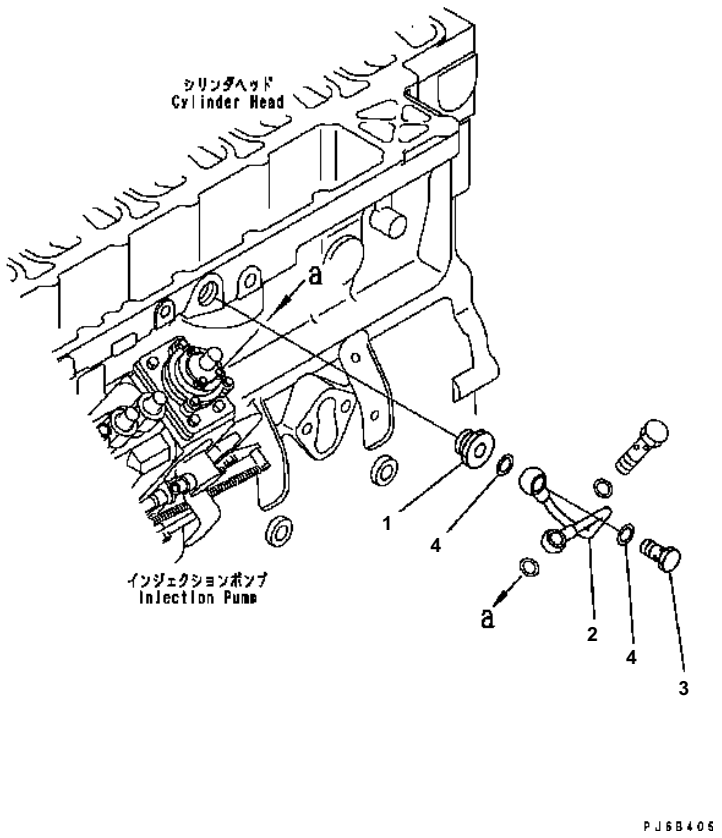

Engine SAA6D102E-2 S/N 26340280-UP

BOOST TUBE

Item	Part No.	Description	Qty	Options
1	6735-71-5460	NIPPLE	1	SN:26274903--
2	6738-71-5450	TUBE	1	SN:26274903--
3	6732-71-6510	BOLT{JOINT}	1	SN:26274903--
4	07005-01212	GASKET\((K1)\)	2	SN:26274903--

Ref. A401R-01B2 Page 030570

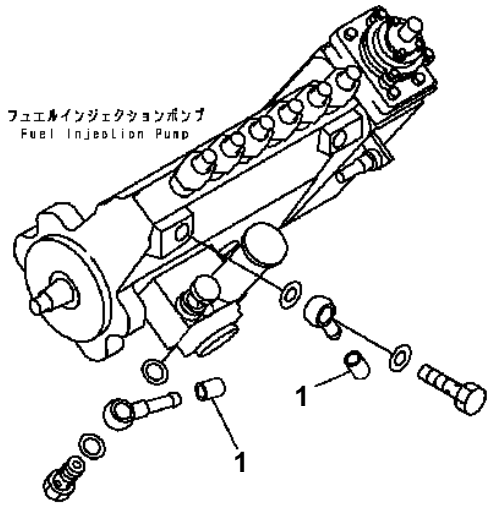

PJ68431

Engine SAA6D102E-2 S/N 26340280-UP

FUEL INLET AND OUTLET JOINT CAP

Item	Part No.	Description	Qty	Options
1	6732-71-5740	CAP{(FOR SHIPPING)}	2	SN:26274903--

Ref. A4010-01B0Z Page 030580

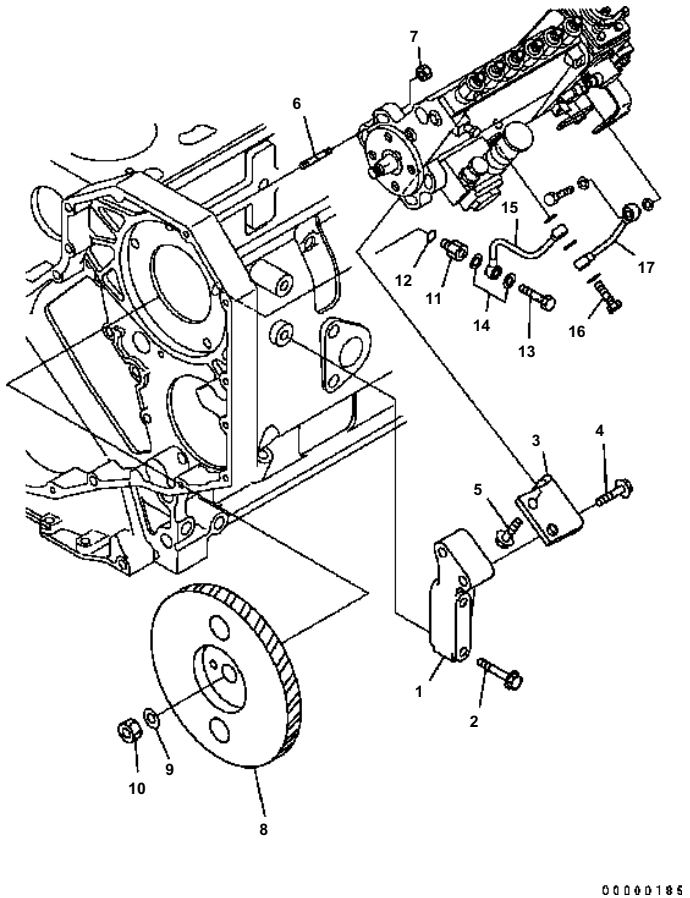

Engine SAA6D102E-2 S/N 26340280-UP

FUEL INJECTION PUMP MOUNTING (#26302312-)

Item	Part No.	Description	Qty	Options
1	6738-71-3620	BRACKET	1	SN:26302312--
2	6732-61-3110	BOLT	2	SN:26302312--
3	6738-71-3610	BRACKET	1	SN:26302312--
4	6735-71-3220	BOLT	2	SN:26302312--
5	6734-71-5610	BOLT	2	SN:26302312--
6	6738-71-3120	STUD	4	SN:26302312--
7	6736-81-6170	NUT	4	SN:26302312--
8	6738-71-3100	GEAR ASS'Y	1	SN:26302312--
9	6130-32-1361	WASHER	1	SN:26302312--
10	01582-01411	NUT	1	SN:26302312--
11	6732-71-5450	NIPPLE	1	SN:26302312--
12	6215-81-9710	O-RING	1	SN:26302312--
13	07206-30710	BOLT{JOINT}	1	SN:26302312--
14	07005-01012	GASKET\((K2)\)	2	SN:26302312--
15	6735-71-5411	TUBE{OIL}	1	SN:26302312--
16	6735-71-5420	BOLT{JOINT}	1	SN:26302312--
17	6735-71-5430	TUBE	1	SN:26302312--

Ref. A408P-01B0 Page 030590

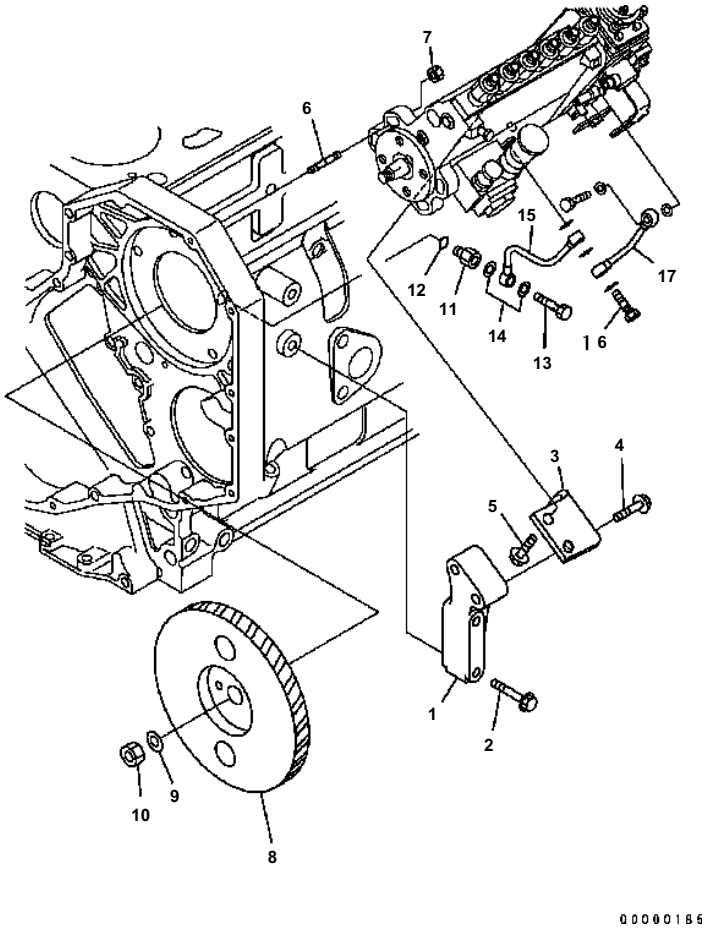

Engine SAA6D102E-2 S/N 26340280-UP

FUEL INJECTION PUMP MOUNTING (FOR TACHOMETER) (#26315342-)

Item	Part No.	Description	Qty	Options
1	6738-71-3620	BRACKET	1	SN:26315342--
2	6732-61-3110	BOLT	2	SN:26315342--
3	6738-71-3610	BRACKET	1	SN:26315342--
4	6735-71-3220	BOLT	2	SN:26315342--
5	6734-71-5610	BOLT	2	SN:26315342--
6	6738-71-3120	STUD	4	SN:26315342--
7	6736-81-6170	NUT	4	SN:26315342--
8	6738-71-3100	GEAR ASS'Y	1	SN:26315342--
	6738-71-3110	· GEAR	1	SN:26315342--
	6738-71-3810	· DAMPER	1	SN:26315342--
9	6130-32-1361	WASHER	1	SN:26315342--
10	6732-71-3690	NUT	1	SN:26315342--
11	6732-71-5450	NIPPLE	1	SN:26315342--
12	6215-81-9710	O-RING	1	SN:26315342--
13	07206-30710	BOLT{JOINT}	1	SN:26315342--
14	07005-01012	GASKET\((K2)\)	5	SN:26315342--
15	6735-71-5411	TUBE{OIL}	1	SN:26315342--
16	6735-71-5420	BOLT{JOINT}	1	SN:26315342--
17	6735-71-5430	TUBE	1	SN:26315342--

Ref. A408P-01B1 Page 030600

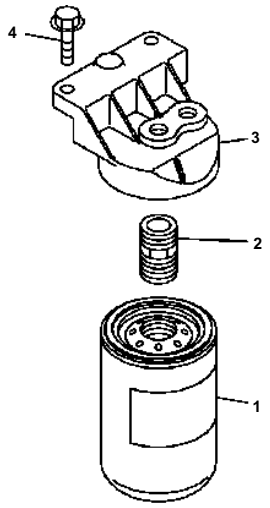

PMD1084

Engine SAA6D102E-2 S/N 26340280-UP

FUEL FILTER (#26302312-)

Item	Part No.	Description	Qty	Options
1	6732-71-6112	CARTRIDGE{FUEL}	1	SN:26306697--
	6732-71-6330	HEAD ASS'Y	1	SN:26319075--
2	6732-71-6340	· ADAPTER	1	SN:26319075--
3	6732-71-6220	· HEAD	1	SN:26319075--
4	6732-61-6140	BOLT	2	SN:26302312--

Ref. A411P-01A0 Page 030610

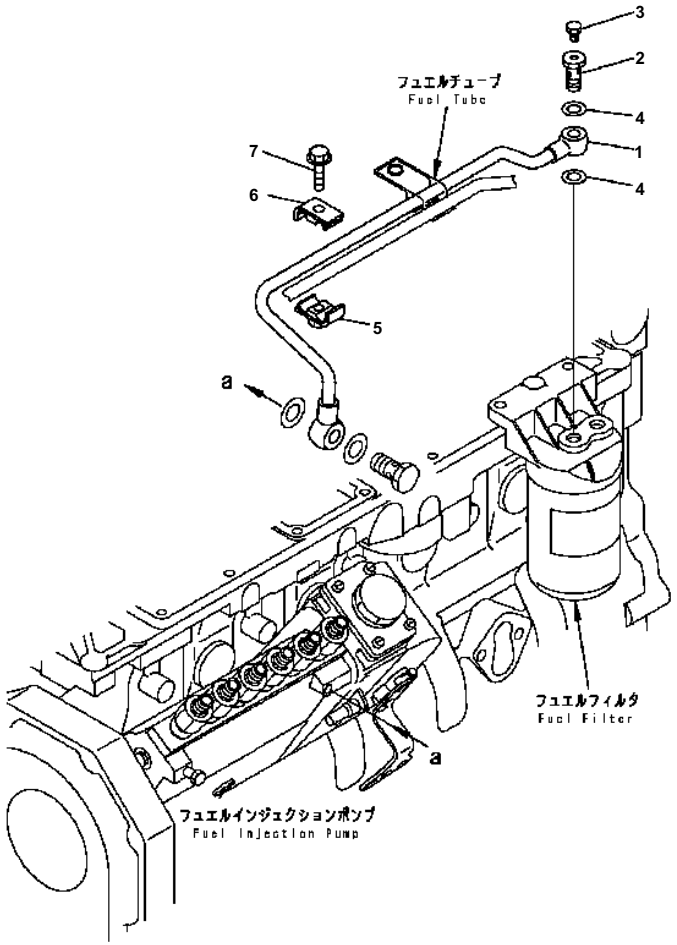

Engine SAA6D102E-2 S/N 26340280-UP

FUEL FILTER PIPING (#36302312-)

Item	Part No.	Description	Qty	Options
1	6735-71-5160	TUBE	1	SN:26302312--
	6735-71-6510	BOLT ASS'Y	1	SN:26302312--
2	6735-71-6530	.BOLT{JOINT}	1	SN:26302312--
3	6735-71-6750	.BOLT	1	SN:26306697--
4	07005-01212	GASKET	2	SN:26302312--
5	6735-71-5170	CLAMP	1	SN:26302312--
6	6735-71-5180	CLAMP	1	SN:26302312--
7	6735-71-5190	BOLT	1	SN:26302312--

Ref. A411R-01A7 Page 030620

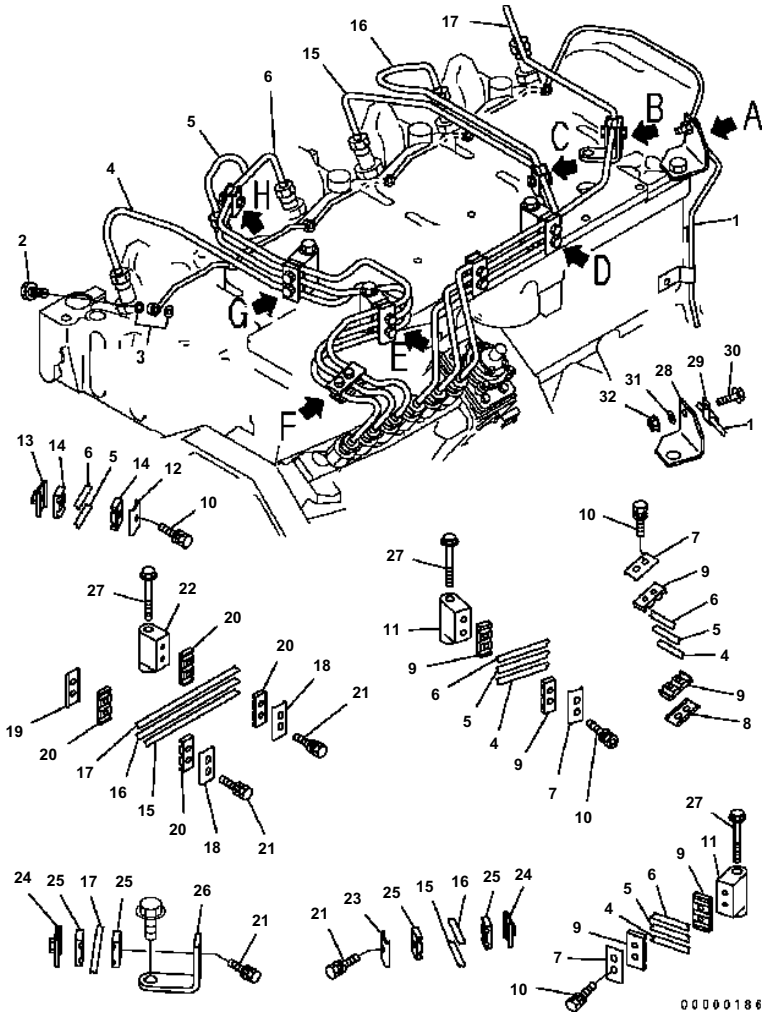

Engine SAA6D102E-2 S/N 26340280-UP

FUEL PIPING (#26302312-)

Item	Part No.	Description	Qty	Options
1	6738-71-5520	MANIFOLD	1	SN:26302312--
2	6732-71-6240	BOLT{JOINT}	6	SN:26302312--
3	6732-71-6260	GASKET\((K1)\)	12	SN:26302312--
4	6738-71-5110	TUBE{NO.1}	1	SN:26302312--
5	6738-71-5120	TUBE{NO.2}	1	SN:26302312--
6	6738-71-5130	TUBE{NO.3}	1	SN:26302312--
7	6734-71-5710	BRACKET	3	SN:26302312--
8	6735-71-5830	BRACKET	1	SN:26302312--
9	6734-71-5720	ISOLATOR	6	SN:26302312--
10	6734-71-5520	BOLT	7	SN:26302312--
11	6734-71-5741	BRACKET	2	SN:26302312--
12	6735-71-5820	BRACKET	1	SN:26302312--
13	6735-71-5840	BRACKET	1	SN:26302312--
14	6735-71-5860	ISOLATOR	2	SN:26302312--
15	6735-71-5643	TUBE{NO.4}	1	SN:26302312--
16	6735-71-5653	TUBE{NO.5}	1	SN:26302312--
17	6735-71-5663	TUBE{NO.6}	1	SN:26302312--
18	6734-71-5710	BRACKET	2	SN:26302312--
19	6735-71-5830	BRACKET	1	SN:26302312--
20	6734-71-5720	ISOLATOR	4	SN:26302312--
21	6734-71-5520	BOLT	6	SN:26302312--
22	6734-71-5741	BRACKET	1	SN:26302312--
23	6735-71-5820	BRACKET	1	SN:26302312--
24	6735-71-5840	BRACKET	2	SN:26302312--
25	6735-71-5860	ISOLATOR	4	SN:26302312--
26	6732-71-5760	BRACKET	1	SN:26302312--
27	6734-11-5210	BOLT	3	SN:26302312--
28	6738-71-5530	BRACKET	1	SN:26302312--
29	04434-50508	CLIP	1	SN:26302312--
30	6732-21-5160	BOLT	1	SN:26302312--
31	01643-30823	WASHER	1	SN:26302312--
32	6732-71-3210	NUT	1	SN:26302312--

Ref. A411S-01C0 Page 030630

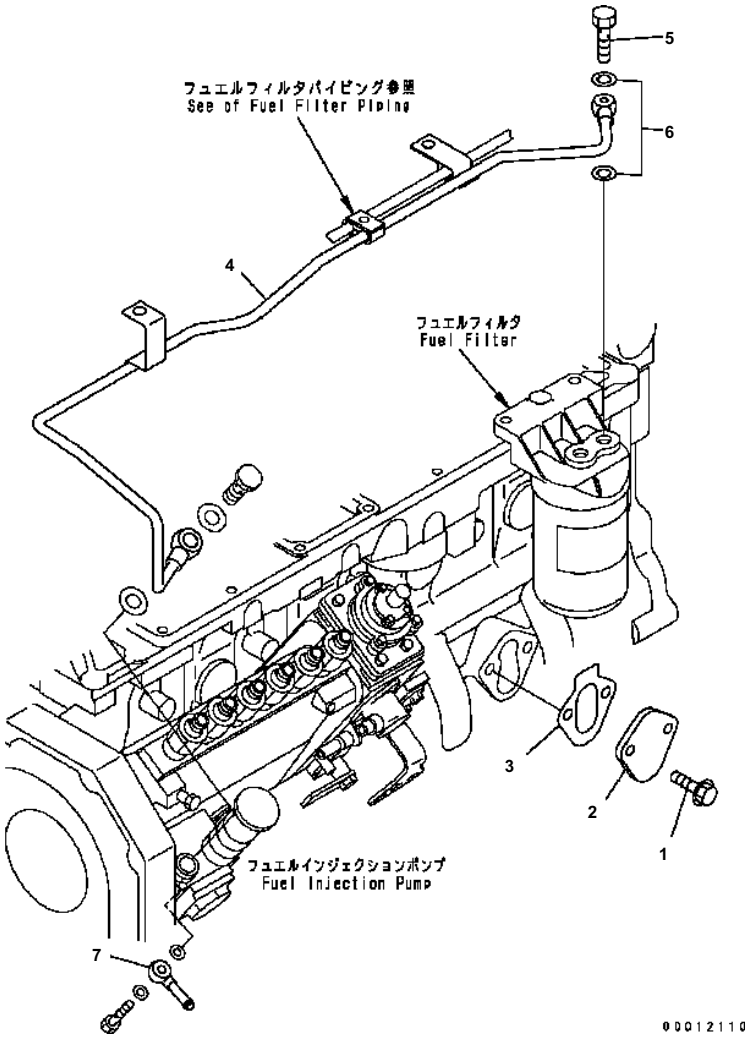

Engine SAA6D102E-2 S/N 26340280-UP

CYLINDER BLOCK BLIND COVER AND PIPING (#26302312-)

Item	Part No.	Description	Qty	Options
1	6732-71-3220	BOLT	2	SN:26302312--
2	6736-71-5811	PLATE	1	SN:26302312--
3	6735-61-6411	GASKET\((K2)\)	1	SN:26302312--
4	6735-71-5371	TUBE	1	SN:26302312--
5	6732-71-6510	BOLT{JOINT}	1	SN:26302312--
6	07005-01212	GASKET	2	SN:26302312--
7	6141-71-1710	JOINT	1	SN:26302312--

Ref. A417P-01B4 Page 030640

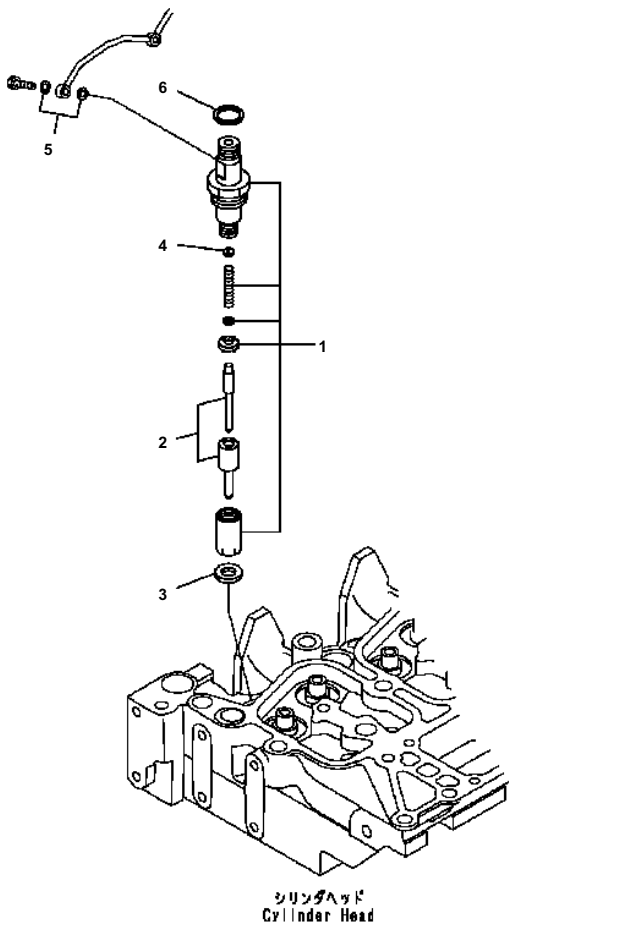

Engine SAA6D102E-2 S/N 26340280-UP

INJECTION NOZZLE (#26316011-)

Item	Part No.	Description	Qty	Options
	6736-13-3090	KIT{NOZZLE HOLDER}	6	SN:26316011--
1	☆	・ INJECTOR	1	SN:26316011--
2	6738-11-3120	・・ NOZZLE	1	SN:26316011--
3	6732-71-6260	・・ WASHER	1	SN:26316011--
4	6734-11-3610	・・ SHIM¤ 100MM	1	SN:26316011--
	6734-11-3620	・・ SHIM¤ 104MM	1	SN:26316011--
	6734-11-3630	・・ SHIM¤ 108MM	1	SN:26316011--
	6734-11-3640	・・ SHIM¤ 110MM	1	SN:26316011--
	6734-11-3650	・・ SHIM¤ 114MM	1	SN:26316011--
	6734-11-3660	・・ SHIM¤ 118MM	1	SN:26316011--
	6734-11-3670	・・ SHIM¤ 120MM	1	SN:26316011--
	6734-11-3680	・・ SHIM¤ 124MM	1	SN:26316011--
	6734-11-3690	・・ SHIM¤ 128MM	1	SN:26316011--
	6734-11-3710	・・ SHIM¤ 130MM	1	SN:26316011--
	6734-11-3720	・・ SHIM¤ 134MM	1	SN:26316011--
	6734-11-3730	・・ SHIM¤ 138MM	1	SN:26316011--
	6734-11-3740	・・ SHIM¤ 140MM	1	SN:26316011--
	6734-11-3750	・・ SHIM¤ 144MM	1	SN:26316011--
	6734-11-3760	・・ SHIM¤ 148MM	1	SN:26316011--
	6734-11-3770	・・ SHIM¤ 150MM	1	SN:26316011--
	6734-11-3780	・・ SHIM¤ 154MM	1	SN:26316011--
	6734-11-3790	・・ SHIM¤ 158MM	1	SN:26316011--
	6734-11-3810	・・ SHIM¤ 160MM	1	SN:26316011--
	6734-11-3820	・・ SHIM¤ 164MM	1	SN:26316011--
	6734-11-3830	・・ SHIM¤ 168MM	1	SN:26316011--
	6734-11-3840	・・ SHIM¤ 170MM	1	SN:26316011--
	6734-11-3850	・・ SHIM¤ 174MM	1	SN:26316011--
	6734-11-3860	・・ SHIM¤ 178MM	1	SN:26316011--
	6734-11-3870	・・ SHIM¤ 180MM	1	SN:26316011--
	6734-11-3880	・・ SHIM¤ 184MM	1	SN:26316011--
	6734-11-3890	・・ SHIM¤ 188MM	1	SN:26316011--
	6734-11-3910	・・ SHIM¤ 190MM	1	SN:26316011--
	6734-11-3920	・・ SHIM¤ 194MM	1	SN:26316011--
	6734-11-3930	・・ SHIM¤ 198MM	1	SN:26316011--
5	6732-71-6230	・ SEAL	2	SN:26316011--
6	6732-11-3850	・ O-RING	1	SN:26316011--

Ref. A4219-01B1 Page 030650

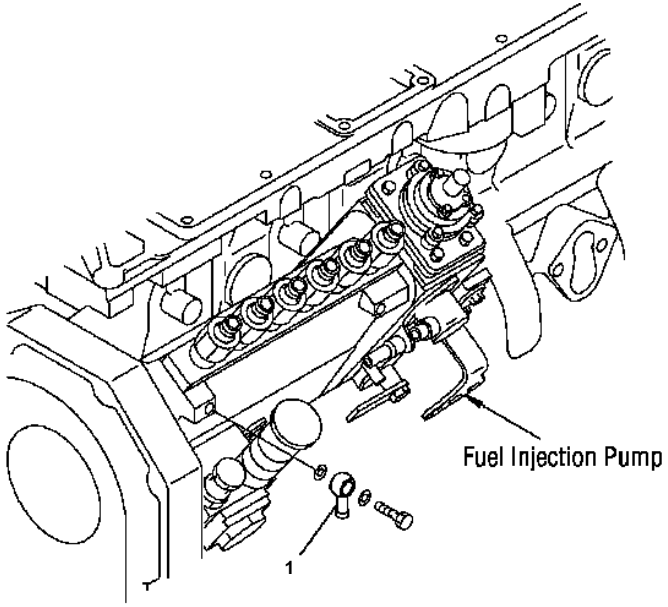

00012111

Engine SAA6D102E-2 S/N 26340280-UP

FUEL JOINT

Item	Part No.	Description	Qty	Options
1	6144-71-5750	JOINT	1	SN:26274903--

Ref. A423V-01A0Z Page 030660

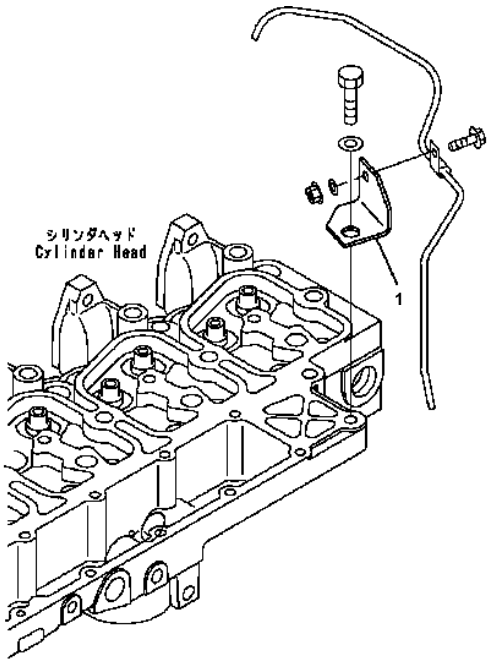

00093299

Engine SAA6D102E-2 S/N 26340280-UP

FUEL RETURN RELATED (#26302312-)

Item	Part No.	Description	Qty	Options
1	6738-71-5530	BRACKET	1	SN:26302312--

Ref. A4230-01A8 Page 030670

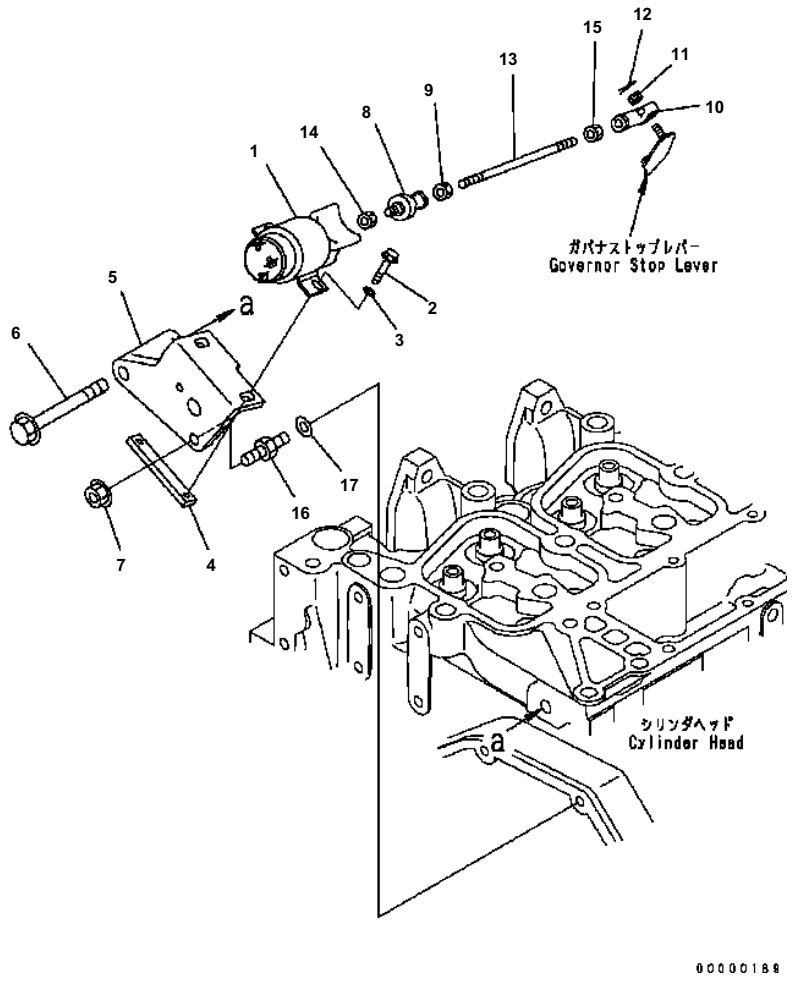

Engine SAA6D102E-2 S/N 26340280-UP

STOP SOLENOID (#26302312-)

Item	Part No.	Description	Qty	Options
1	600-815-9260	SOLENOID ASS'Y	1	SN:26302312--
2	01435-00620	BOLT	2	SN:26302312--
3	01640-20610	WASHER	2	SN:26302312--
4	6732-81-9520	PLATE	1	SN:26302312--
5	6732-81-9511	BRACKET	1	SN:26302312--
6	01435-01070	BOLT	2	SN:26302312--
7	01584-00806	NUT	1	SN:26302312--
8	6204-81-9640	JOINT	1	SN:26302312--
9	01580-00605	NUT	1	SN:26302312--
10	04250-60639	END{ROD}	1	SN:26302312--
11	01590-10607	NUT	1	SN:26302312--
12	04050-11212	PIN{COTTER}	1	SN:26302312--
13	04248-50625	ROD	1	SN:26302312--
14	01580-00605	NUT	1	SN:26302312--
15	01508-40603	NUT{L.H. THREAD}	1	SN:26302312--
16	6732-21-3990	STUD	1	SN:26302312--
17	01640-20816	WASHER	1	SN:26302312--

Ref. A4510-01A5 Page 030680

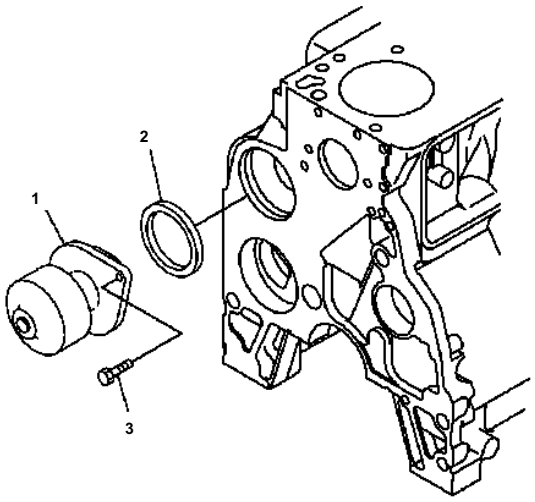

PJ6B451

Engine SAA6D102E-2 S/N 26340280-UP

WATER PUMP (#26302312-)

Item	Part No.	Description	Qty	Options
1	6735-61-1101	WATER PUMP ASS'Y	1	SN:26323434--
2	6736-61-1520	SEAL\((K2)\)	1	SN:26302312--
3	6732-41-1260	BOLT	2	SN:26302312--

Ref. A501P-01A3 Page 030690

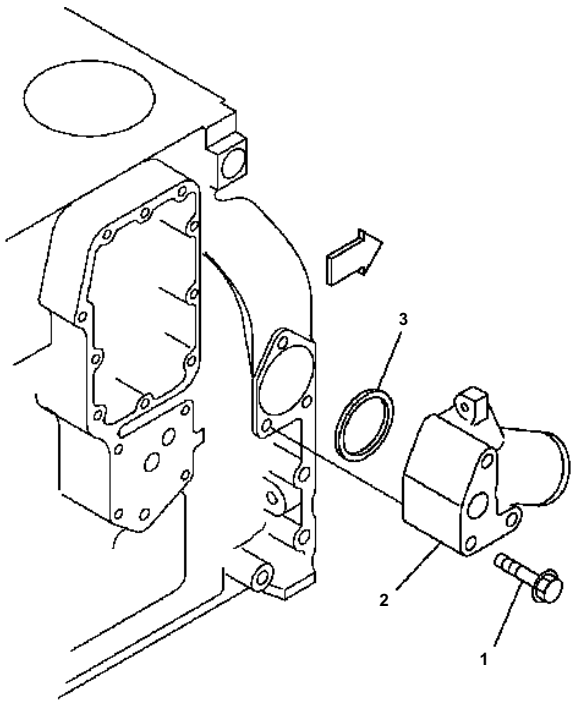

PM36293

Engine SAA6D102E-2 S/N 26340280-UP

WATER CONNECTOR (#26300902-)

Item	Part No.	Description	Qty	Options
1	6732-61-6120	BOLT	3	SN:26300902--
2	6731-61-6260	CONNECTOR	1	SN:26300902--
3	6732-61-6130	SEAL\((K2)\)	1	SN:26300902--

Ref. A501R-01A0 Page 030700

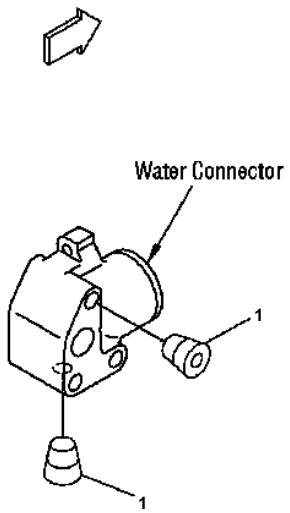

PJ60416

Engine SAA6D102E-2 S/N 26340280-UP

WATER CONNECTOR PLUG (#26277757-)

Item	Part No.	Description	Qty	Options
1	6732-21-1980	PLUG	2	SN:26320326--

Ref. A501S-01A0 Page 030710

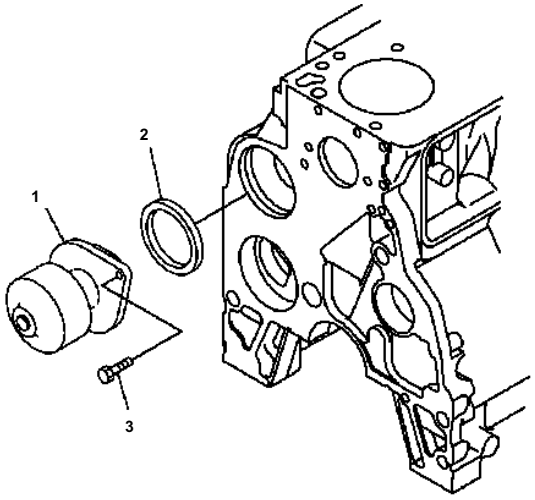

PJ6B451

Engine SAA6D102E-2 S/N 26340280-UP

WATER PUMP

Item	Part No.	Description	Qty	Options
	6731-62-1110	KIT{WATER PUMP}	1	SN:26340280--
1	6735-61-1101	· WATER PUMP ASS'Y	1	SN:26340280--
2	6736-61-1520	· SEAL\((K2)\)	1	SN:26274903--
3	6732-41-1260	BOLT	2	SN:26274903--

Ref. A5019-01A0 Page 030720

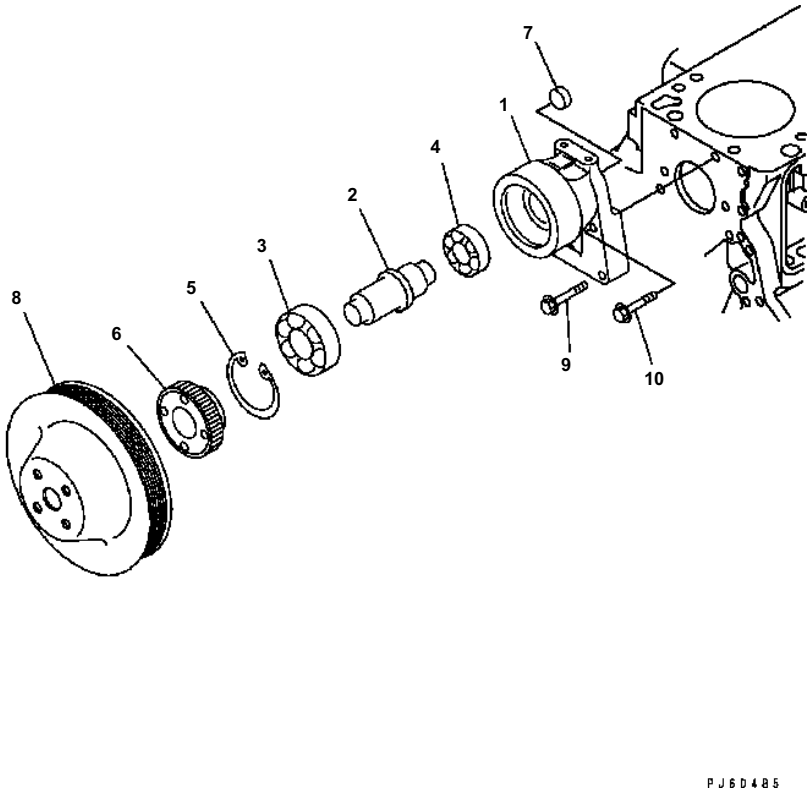

Engine SAA6D102E-2 S/N 26340280-UP

FAN DRIVE PULLEY (#26302312-)

Item	Part No.	Description	Qty	Options
	6732-61-3503	SUPPORT ASS'Y	1	SN:26302312--
1	(☆6732-61-3513)	・ SUPPORT	1	SN:26302312--
2	6732-61-3533	・ SHAFT	1	SN:26302312--
3	06347-06207	・ BEARING	1	SN:26302312--
4	06330-06205	・ BEARING	1	SN:26302312--
5	6162-63-1440	・ RING{SNAP}	1	SN:26302312--
6	6732-61-3542	・ BOSS	1	SN:26302312--
7	07046-22216	・ PLUG	1	SN:26302312--
8	6732-61-3750	PULLEY	1	SN:26302312--
9	6732-61-3170	BOLT	2	SN:26302312--
10	6732-21-6630	BOLT	2	SN:26302312--

Ref. A502P-01D2 Page 030730

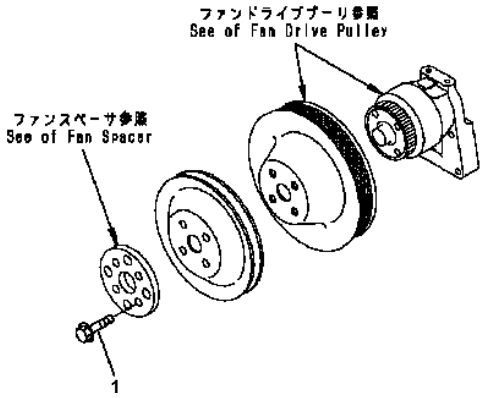

00000190

Engine SAA6D102E-2 S/N 26340280-UP

COLLING FAN BOLT (#26302312-)

Item	Part No.	Description	Qty	Options
1	6735-71-3220	BOLT	4	SN:26302312--

Ref. A502R-01A1 Page 030740

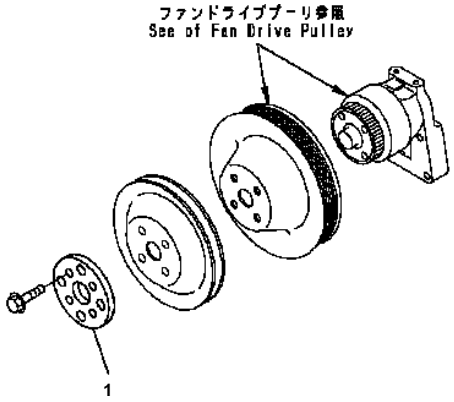

00000193

Engine SAA6D102E-2 S/N 26340280-UP

FAN PILOT SPACE (#26302312-)

Item	Part No.	Description	Qty	Options
1	6732-61-3160	SPACER	1	SN:26302312--

Ref. A504P-01A3 Page 030750

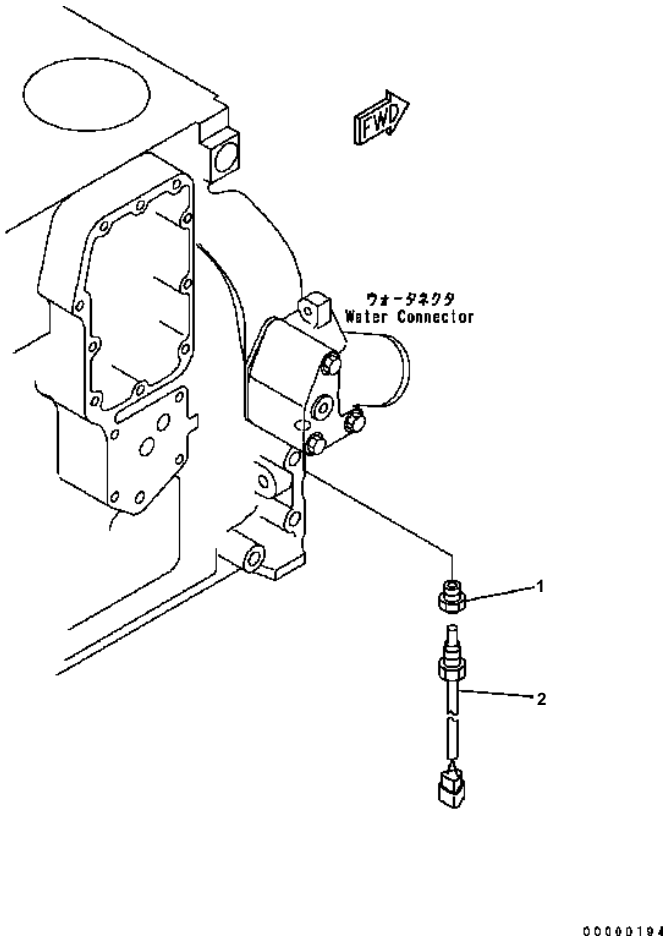

Engine SAA6D102E-2 S/N 26340280-UP

WATER TEMPERATURE SENSOR (#26302312-)

Item	Part No.	Description	Qty	Options
1	565-06-13212	ADAPTER	1	SN:26302312--
2	7861-93-3520	SENSOR	1	SN:26302312--

Ref. A5090-01A2 Page 030760

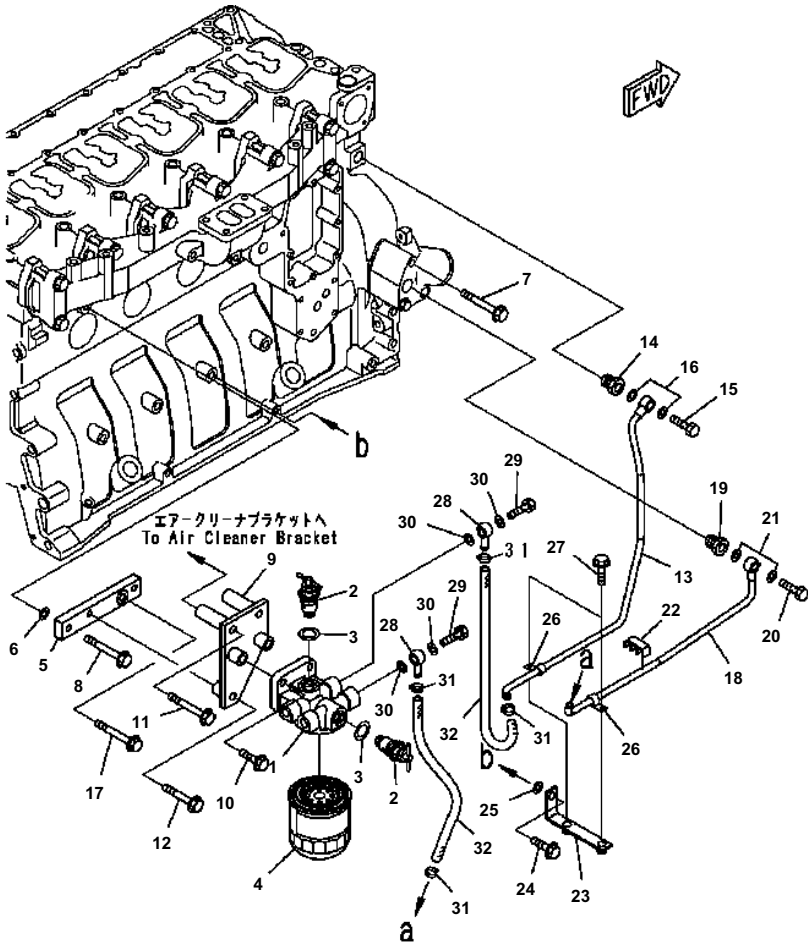

Engine SAA6D102E-2 S/N 26340280-UP

CORROSION RESISTOR (#26321894-)

Item	Part No.	Description	Qty	Options
	6738-61-8100	CORROSION ASS'Y	1	SN:26321894--
	6732-61-8300	・ HEAD ASS'Y	1	SN:26321894--
1	600-411-2410	・・ HEAD	1	SN:26321894--
2	600-411-2120	・・ VALVE ASS'Y	2	SN:26321894--
3	600-411-2130	・・ GASKET {CORROSION}	2	SN:26321894--
4	600-411-1191	・ CARTRIDGE	1	SN:26321894--
5	6738-11-5680	PLATE	1	SN:26321894--
6	01643-31032	WASHER	2	SN:26321894--
7	01435-01080	BOLT	1	SN:26321894--
8	01435-01085	BOLT	1	SN:26321894--
9	418-01-31240	BRACKET	1	SN:26321894--
10	01435-01030	BOLT	2	SN:26321894--
11	01435-01085	BOLT	2	SN:26321894--
12	01435-01050	BOLT	1	SN:26321894--
13	419-01-31311	TUBE	1	SN:26331373--
14	6735-61-8140	NIPPLE	1	SN:26331373--
15	07206-31014	BOLT	1	SN:26321894--
16	07005-01412	GASKET	2	SN:26321894--
17	01435-01080	BOLT	1	SN:26321894--
18	419-01-B3120	TUBE	1	SN:30389806--
	419-01-31320	TUBE	1	SN:26321894--30389805
19	418-07-B3480	NIPPLE	1	SN:30388286--
	6151-71-5910	NIPPLE	1	SN:26321894--30388285
20	07206-31014	BOLT {JOINT}	1	SN:26321894--
21	07005-01412	GASKET	2	SN:26321894--
22	6202-72-5530	CLAMP	1	SN:26321894--
23	419-01-31330	BRACKET	1	SN:26321894--
24	01435-01225	BOLT	1	SN:26321894--
25	01643-31232	WASHER	1	SN:26321894--
26	04434-51010	CLIP	2	SN:26321894--
27	01435-01016	BOLT	2	SN:26321894--
28	6144-71-5750	JOINT	2	SN:26321894--
29	07206-31014	BOLT {JOINT}	2	SN:26321894--
30	07005-01412	GASKET	4	SN:26321894--
31	07281-00197	CLAMP	4	SN:26321894--
32	07260-20945	HOSE	2	SN:26321894--

Ref. A5210-01B5 Page 030770

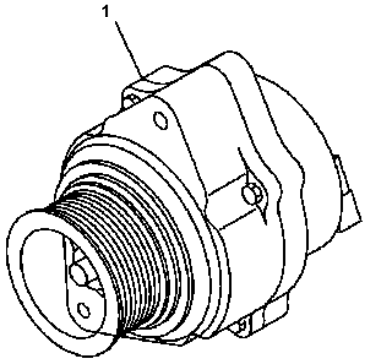

PND1097

Engine SAA6D102E-2 S/N 26340280-UP

ALTERNATOR (60A) (#26302312-)

Item	Part No.	Description	Qty	Options
1	(600-861-6420)	ALTERNATOR A. (60A){(SEE FIG.A601P-02B1)}	1	SN:26302312--

Ref. A601P-01B1 Page 030780

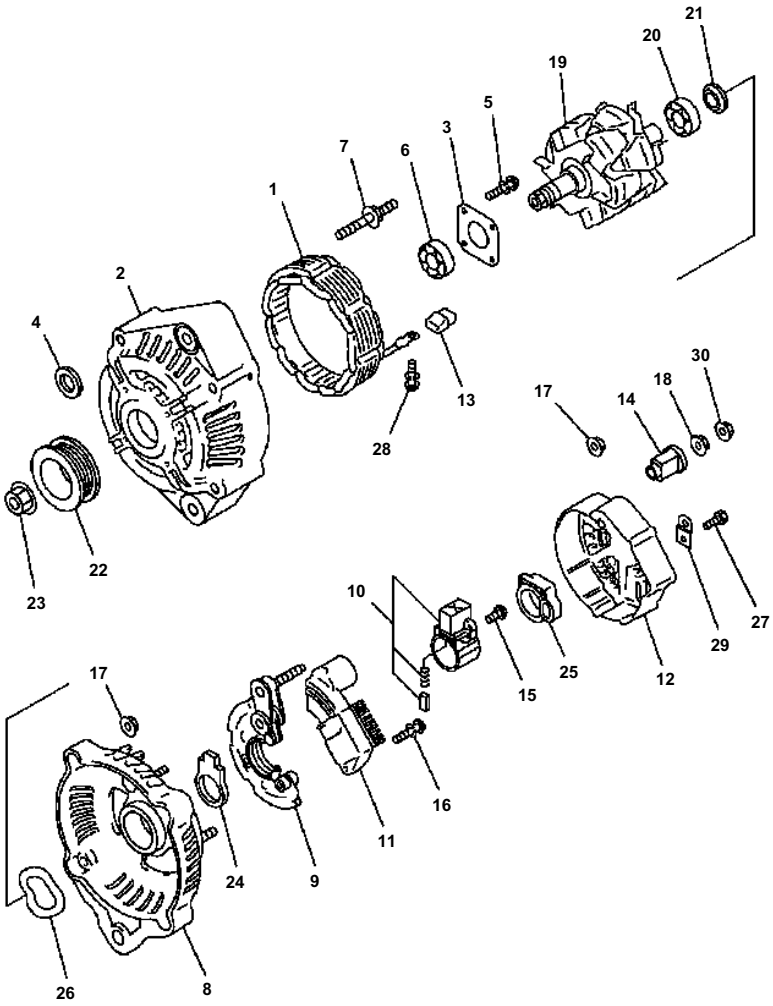

Engine SAA6D102E-2 S/N 26340280-UP

ALTERNATOR (60A) (INNER PARTS) (#26302312-)

Item	Part No.	Description	Qty	Options
	600-861-6420	ALTERNATOR A (60A)	1	SN:26302312--
	ND121400-0800	· FRAME ASS'Y	1	SN:26302312--
1	ND021100-4210	· · STATOR ASS'Y	1	SN:26302312--
2	ND021401-4980	· · FRAME	1	SN:26302312--
3	ND021411-0570	· · PLATE	1	SN:26302312--
4	ND021045-0530	· · COLLAR	1	SN:26302312--
5	ND949006-5590	· · SCREW	4	SN:26302312--
6	ND949100-5010	· · BEARING{BALL}	1	SN:26302312--
7	ND949043-2000	· · BOLT{STUD}	4	SN:26302312--
8	ND021501-8050	· FRAME{REAR}	1	SN:26302312--
9	ND021580-4820	· HOLDER	1	SN:26302312--
10	ND021620-2720	· BRUSH HOLDER ASS'Y	1	SN:26302312--
11	ND126000-2320	· REGULATOR ASS'Y	1	SN:26302312--
12	ND021551-2480	· COVER	1	SN:26302312--
13	ND021605-1970	· BUSHING	4	SN:26302312--
14	ND021605-2481	· BUSHING	1	SN:26302312--
15	ND949006-5460	· SCREW	3	SN:26302312--
16	ND91310-04251	· SCREW	2	SN:26302312--
	ND949007-5110	· SCREW	2	SN:26302312--
17	ND949056-2481	· NUT	7	SN:26302312--
18	ND949056-3080	· NUT	1	SN:26302312--
19	ND021200-8380	· ROTOR ASS'Y	1	SN:26302312--
20	ND949100-2790	· · BEARING{BALL}	1	SN:26302312--
21	ND021506-0070	· · COVER	1	SN:26302312--
22	ND021041-8620	· PULLEY	1	SN:26302312--
23	ND949056-2520	· NUT	1	SN:26302312--
24	ND021626-0190	· SEAL	1	SN:26302312--
25	ND021626-0250	· SEAL	1	SN:26302312--
26	ND021542-0160	· WASHER	1	SN:26302312--
27	ND949006-6401	· SCREW	1	SN:26302312--
28	ND949007-6280	· SCREW	4	SN:26302312--
29	ND021602-5230	· PLATE	1	SN:26302312--
30	ND92150-06061	· NUT	1	SN:26302312--

Ref. A601P-02B1 Page 030790

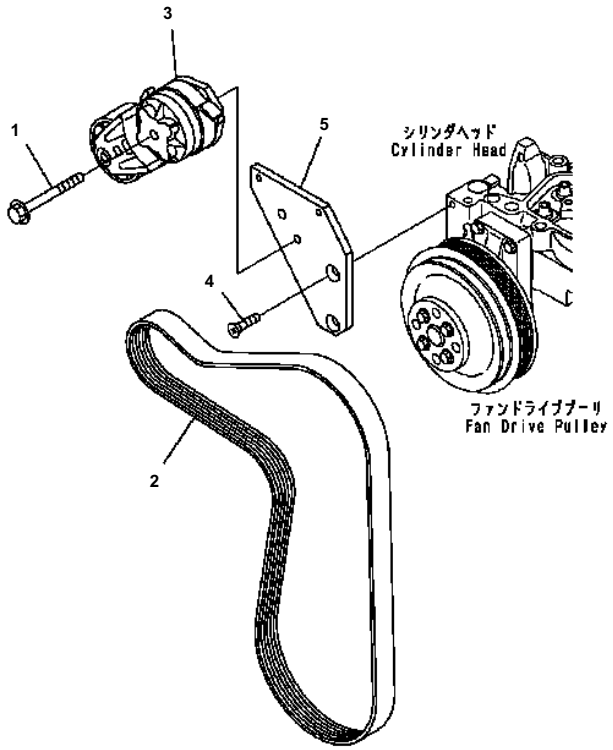

Engine SAA6D102E-2 S/N 26340280-UP

BELT TENSIONER (FOR 35, 60A ALTERNATOR) (#26302312-)

Item	Part No.	Description	Qty	Options
1	6732-61-4120	BOLT	1	SN:26302312--
2	6732-81-6170	BELT	1	SN:26302312--
3	6736-61-4150	TENSIONER{BELT}	1	SN:26339177--
4	6732-61-4220	SCREW	2	SN:26302312--
5	6738-61-3911	PLATE	1	SN:26302312--

Ref. A601S-01F3 Page 030800

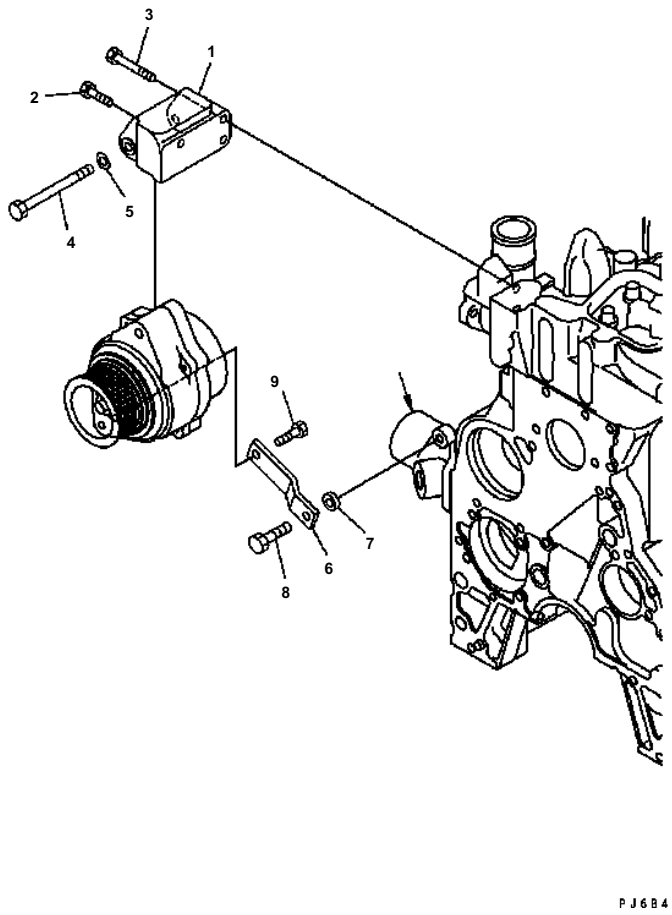

Engine SAA6D102E-2 S/N 26340280-UP

ALTERNATOR MOUNTING (FOR 35A, 60A ALTERNATOR)

Item	Part No.	Description	Qty	Options
1	6754-81-6110	SUPPORT ASS'Y	1	SN:26365525--
2	6732-21-5160	BOLT	1	SN:26274903--
3	6736-21-3210	BOLT	2	SN:26274903--
4	01018-31095	BOLT	1	SN:26274903--
5	01641-01016	WASHER	1	SN:26274903--
6	6732-81-6560	PLATE	1	SN:26274903--
7	6732-81-6690	SPACER	1	SN:26274903--
8	6732-21-5160	BOLT	1	SN:26274903--
9	6732-21-6630	BOLT	1	SN:26274903--

Ref. A601T-01B1 Page 030810

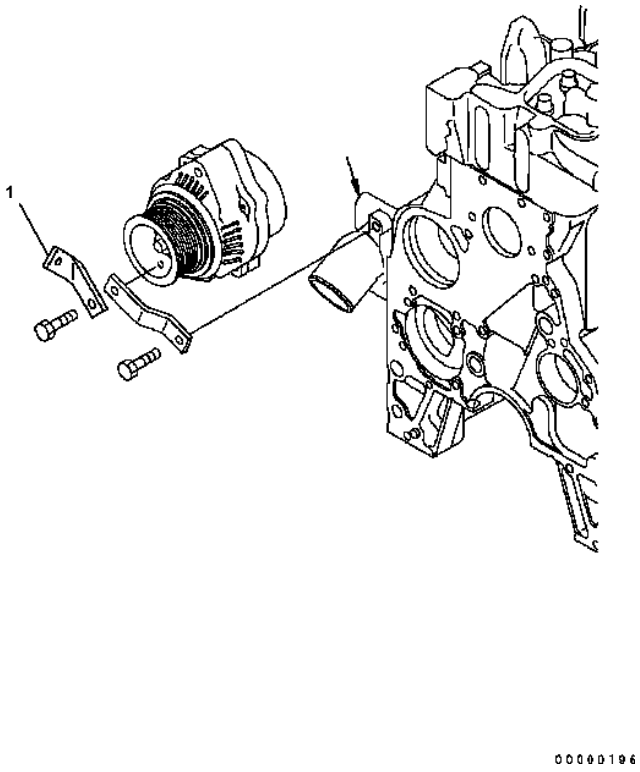

Engine SAA6D102E-2 S/N 26340280-UP

BELT GUARD (#26302312-)

Item	Part No.	Description	Qty	Options
1	6738-81-6120	PLATE	1	SN:26302312--

Ref. A601V-01A0 Page 030820

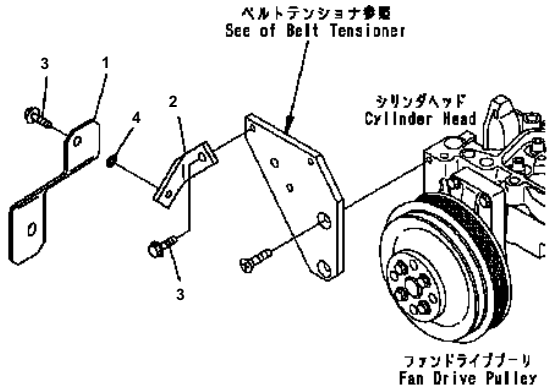

00000192

Engine SAA6D102E-2 S/N 26340280-UP

ALTERNATOR COVER (FOR 60A ALTERNATOR) (#26302312-)

Item	Part No.	Description	Qty	Options
1	6738-81-6110	COVER	1	SN:26302312--
2	6738-81-6130	PLATE	1	SN:26302312--
3	01435-00812	BOLT	2	SN:26302312--
4	01640-20816	WASHER	1	SN:26302312--

Ref. A6010-01B1 Page 030830

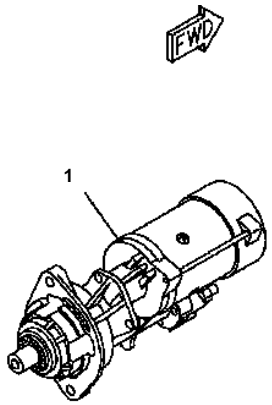

PMD0858

Engine SAA6D102E-2 S/N 26340280-UP

STARTING MOTOR (4.5KM) (WITH PROTECT COVER) (#26302312-)

Item	Part No.	Description	Qty	Options
1	(600-863-4210)	STARTING MOTOR ASS'Y	1	SN:26302312--

Ref. A621P-01A4 Page 030840

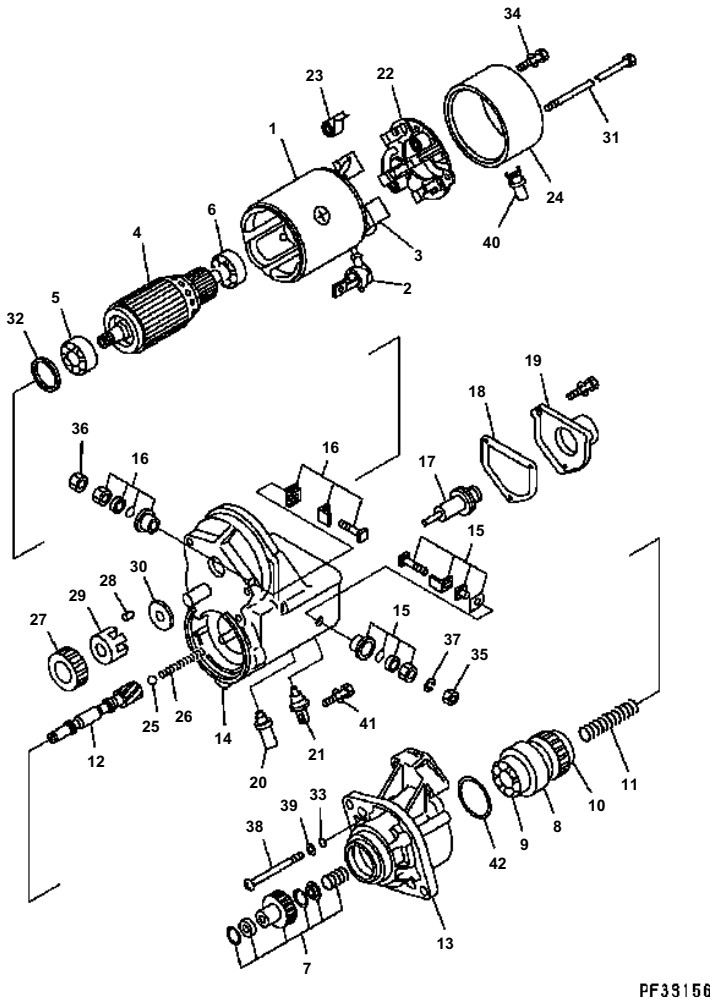

Engine SAA6D102E-2 S/N 26340280-UP

STARTING MOTOR (45KM) (WITH PROTECT COVER) (INNER PARTS) (#26302312-)

Item	Part No.	Description	Qty	Options
	600-863-4210	STARTING MOTOR ASS'Y{(45KW)}	1	SN:26302312--
1	ND028100-2882	· YOKE ASS'Y	1	SN:26302312--
2	ND028062-0130	· · CAP	1	SN:26302312--
3	ND028099-3570	· · STARTER KIT	2	SN:26302312--
4	ND028200-1590	· ARMATURE ASS'Y	1	SN:26302312--
5	ND949100-1930	· · BEARING{BALL}	1	SN:26302312--
6	ND949100-1750	· · BEARING{BALL}	1	SN:26302312--
	ND028300-6551	· CLUTCH ASS'Y	1	SN:26302312--
7	ND028099-3270	· · STARTER KIT	1	SN:26302312--
8	ND028300-6751	· · CLUTCH ASS'Y	1	SN:26302312--
9	ND949100-4500	· · · BEARING{BALL¤ FRONT}	1	SN:26302312--
10	ND949100-1920	· · · BEARING{BALL¤ REAR}	1	SN:26302312--
11	ND949170-4040	· · SPRING	1	SN:26302312--
12	ND028381-0071	· · SHAFT	1	SN:26302312--
13	ND228401-0633	· HOUSING ASS'Y	1	SN:26302312--
14	ND153400-8530	· MAGNETIC SWITCH A	1	SN:26302312--
15	ND028099-5620	· · STARTER KIT	1	SN:26302312--
16	ND028099-3160	· · STARTER KIT	1	SN:26302312--
17	ND053660-7170	· · PLUNGER	1	SN:26302312--
18	ND053404-0240	· · GASKET	1	SN:26302312--
19	ND053505-0290	· · COVER	1	SN:26302312--
20	ND053480-7560	· · BOLT ASS'Y	1	SN:26302312--
21	ND028065-0250	· · BUSHING	1	SN:26302312--
22	ND028510-5390	· BRUSH HOLDER ASS'Y	1	SN:26302312--
23	ND949173-0571	· · SPRING	4	SN:26302312--
24	ND028501-8091	· FRAME	1	SN:26302312--
25	ND128961-0010	· BALL	1	SN:26302312--
26	ND949170-4070	· SPRING	1	SN:26302312--
27	ND028371-1500	· PINION	1	SN:26302312--
28	ND028306-0070	· ROLLER	5	SN:26302312--
29	ND028063-0030	· RETAINER	1	SN:26302312--
30	ND028327-0171	· RETAINER	1	SN:26302312--
31	ND128950-0520	· BOLT	2	SN:26302312--
32	ND949020-0600	· WASHER{FELT}	1	SN:26302312--
33	ND90801-10050	· O-RING	3	SN:26302312--
34	ND949007-6530	· SCREW	2	SN:26302312--
35	ND90170-10061	· NUT	1	SN:26302312--
36	ND949056-4480	· NUT	1	SN:26302312--
37	ND90258-10001	· WASHER	1	SN:26302312--
38	ND949006-4720	· SCREW	3	SN:26302312--

Ref. A621P-02A4 Page 030850

Engine SAA6D102E-2 S/N 26340280-UP

STARTING MOTOR (45KM) (WITH PROTECT COVER) (INNER PARTS) (#26302312-)

Item	Part No.	Description	Qty	Options
39	ND90200-06241	· WASHER	3	SN:26302312--
40	ND028062-5790	· COVER	1	SN:26302312--
41	ND949007-6850	· SCREW	1	SN:26302312--
42	ND028901-5190	· SEAL	1	SN:26302312--

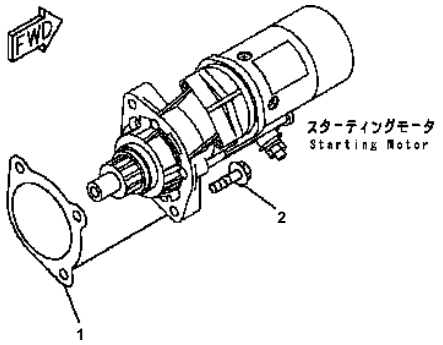

PMD1104

Engine SAA6D102E-2 S/N 26340280-UP

STARTING MOTOR MOUNTING (4.5KM)

Item	Part No.	Description	Qty	Options
1	6732-81-6811	GASKET\((K2)\)	1	SN:26274903--
2	01435-01035	BOLT	2	SN:26274903--

Ref. A621S-01A7Z Page 030860

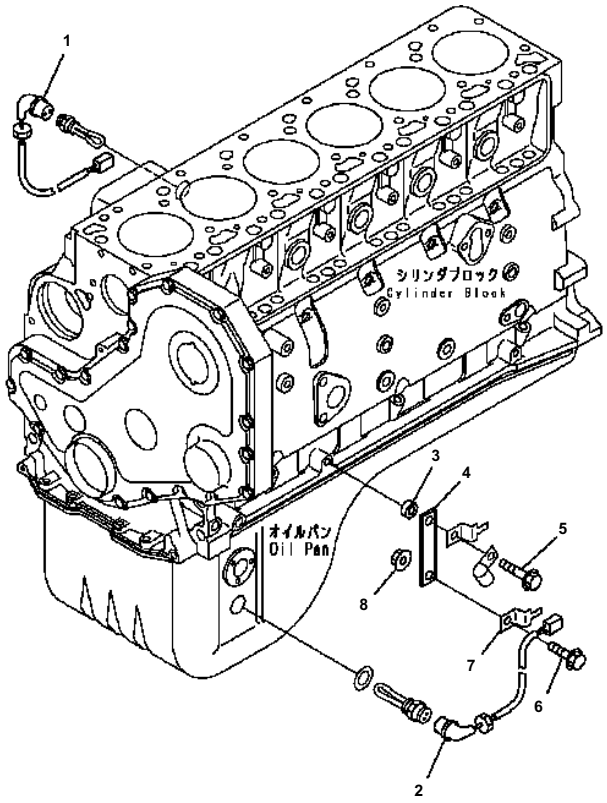

00026553

Engine SAA6D102E-2 S/N 26340280-UP

HEATER RELATED PARTS (COLD TERRAIN SPEC.) (#26339177-)

Item	Part No.	Description	Qty	Options
1	6735-81-5230	WIRING HARNESS	1	SN:26339177--
2	6735-81-5230	WIRING HARNESS	1	SN:26339177--
3	6130-12-1961	SPACER	1	SN:26339177--
4	6212-11-4780	PLATE	1	SN:26339177--
5	01435-00825	BOLT	1	SN:26339177--
6	01435-00816	BOLT	1	SN:26339177--
7	08053-01510	CLIP	1	SN:26339177--
8	01584-00806	NUT	1	SN:26339177--

Ref. A6510-01A0 Page 030870

リペア パーツ
REPAIR PARTS 詳細については次のページを参照して下さい。
See subsequent pages for details.

PNDQ861

Engine SAA6D102E-2 S/N 26340280-UP

REPAIR PARTS (1/4) (CYLINDER HEAD)

Item	Part No.	Description	Qty	Options
1	6736-19-1310	GUIDE¤ 60.50MM	6	SN:26274903--
2	6736-19-1410	GUIDE¤ 51.75MM	6	SN:26274903--
3	6736-18-1310	GUIDE	12	SN:26274903--
		OVERSIZE PARTS		
4	6735-11-1870	GASKET¤ 0.25MM	1	SN:26274903--
5	6735-11-1840	GASKET¤ 0.50MM	1	SN:26274903--

Ref. A8110-01A9 Page 030880

リペア パーツ
REPAIR PARTS 詳細については次のページを参照して下さい。
See subsequent pages for details.

PMD0861

Engine SAA6D102E-2 S/N 26340280-UP

REPAIR PARTS (2/4) (CYLINDER BLOCK)

Item	Part No.	Description	Qty	Options
		OVERSIZE PARTS		
1	6736-29-1410	BUSHING{CAM¤ NO.1}	1	SN:26274903--
2	6736-29-1420	BUSHING{CAM¤ NO.2¤3¤4¤5¤6¤7}	1	SN:26274903--
		STANDARD		
3	6736-29-2110	LINER{SALVAGE}	6	SN:26274903--

Ref. A8110-02A9 Page 030890

リペア パーツ
REPAIR PARTS 詳細については次のページを参照して下さい。
See subsequent pages for details.

PNDQ861

Engine SAA6D102E-2 S/N 26340280-UP

REPAIR PARTS (3/4) (CRANKSHAFT)

Item	Part No.	Description	Qty	Options
1	6736-39-1220	SLEEVE{WEAR}	1	SN:26274903--
2	6736-39-1130	SLEEVE{WET}	1	SN:26274903--
		UNDERSIZE 0.25MM		
	6735-29-8100	MAIN METAL ASS'Y	6	SN:26274903--
3	(☆6735-29-8110)	・METAL{UPPER}	1	SN:26274903--
4	(☆6735-29-8210)	・METAL{LOWER}	1	SN:26274903--
		UNDERSIZE 0.50MM		
	6735-28-8100	MAIN METAL ASS'Y	6	SN:26274903--
3	(☆6735-28-8110)	・METAL{UPPER}	1	SN:26274903--
4	(☆6735-28-8210)	・METAL{LOWER}	1	SN:26274903--
		UNDERSIZE 0.75MM		
	6735-27-8100	MAIN METAL ASS'Y	6	SN:26274903--
3	(☆6735-27-8110)	・METAL{UPPER}	1	SN:26274903--
4	(☆6735-27-8210)	・METAL{LOWER}	1	SN:26274903--
		UNDERSIZE 1.00MM		
	6735-26-8100	MAIN METAL ASS'Y	6	SN:26274903--
3	(☆6735-26-8110)	・METAL{UPPER}	1	SN:26274903--
4	(☆6735-26-8210)	・METAL{LOWER}	1	SN:26274903--
		OVERSIZE 0.25MM		
	6736-29-8610	THRUST METAL ASS'Y	1	SN:26274903--
5	(☆6736-29-8140)	・METAL{THRUST}	1	SN:26274903--
6	(☆6735-29-8210)	・METAL{LOWER}	1	SN:26274903--
		OVERSIZE 0.50MM		
	6735-28-8200	THRUST METAL ASS'Y	1	SN:26274903--
5	(☆6736-28-8120)	・METAL{THRUST}	1	SN:26274903--
6	(☆6735-28-8210)	・METAL{LOWER}	1	SN:26274903--
		OVERSIZE 0.75MM		
	6736-28-8620	THRUST METAL ASS'Y	1	SN:26274903--
5	(☆6736-27-8140)	・METAL{THRUST}	1	SN:26274903--
6	(☆6735-27-8210)	・METAL{LOWER}	1	SN:26274903--
		OVERSIZE 1.00MM		
	6736-27-8620	THRUST METAL ASS'Y	1	SN:26274903--
5	(☆6736-26-8140)	・METAL{THRUST}	1	SN:26274903--
6	(☆6735-26-8210)	・METAL{LOWER}	1	SN:26274903--
		OVERSIZE 0.5MM/0.5MM		
	6736-29-8700	THRUST METAL ASS'Y	1	SN:26274903--
5	(☆6736-29-8730)	・METAL{THRUST 05MM/05MM}	1	SN:26274903--
6	(☆6735-28-8210)	・METAL{LOWER}	1	SN:26274903--
		OVERSIZE 1.0MM/1.0MM		
	6736-28-8700	THRUST METAL ASS'Y	1	SN:26274903--
5	(☆6736-28-8720)	・METAL{THRUST 1.0MM/1.0MM}	1	SN:26274903--

Ref. A8110-03A9 Page 030900

Engine SAA6D102E-2 S/N 26340280-UP

REPAIR PARTS (3/4) (CRANKSHAFT)

Item	Part No.	Description	Qty	Options
6	(☆6735-26-8210)	・ METAL{LOWER}	1	SN:26274903--

リペア パーツ
REPAIR PARTS 詳細については次のページを参照して下さい。
See subsequent pages for details.

PMD08861

Engine SAA6D102E-2 S/N 26340280-UP

REPAIR PARTS (4/4) (PISTON)

Item	Part No.	Description	Qty	Options
		OVERSIZE PARTS		
1	6736-39-3400	METAL¤ 025MM	12	SN:26274903--
	6736-38-3400	METAL¤ 050MM	12	SN:26274903--
	6736-37-3400	METAL¤ 075MM	12	SN:26274903--
	6736-36-3400	METAL¤ 100MM	12	SN:26274903--
		OVERSIZE 0.5MM		
	6738-39-2031	PISTON RING ASS'Y	6	SN:26292269--
2	(☆6738-39-2311)	・ RING{TOP}	1	SN:26292269--
	6738-38-2031	PISTON RING ASS'Y	6	SN:26292269--
2	(☆6738-38-2311)	・ RING{TOP}	1	SN:26292269--
3	(☆6738-39-2320)	・ RING{SECOND}	1	SN:26274903--
	(☆6738-38-2320)	・ RING{SECOND}	1	SN:26274903--
4	(☆6732-39-2350)	・ RING{OIL}	1	SN:26274903--
		OVERSIZE 1.0MM		
4	(☆6732-38-2350)	・ RING{OIL}	1	SN:26274903--
		OVERSIZE PARTS		
5	6738-39-2111	PISTON¤ 05MM	6	SN:26292269--
6	6738-38-2111	PISTON¤ 10MM	6	SN:26292269--

Ref. A8110-04A9 Page 030910

KIT 詳細については次のページを参照して下さい。
See subsequent pages for details.

K-1 6738-K1-1200 シリンダ ヘッド ガスケット キット
CYLINDER HEAD GASKET KIT

このガスケットキットは、キット区分ごとの基本セットです。
部品明細書中、キットの記号が付いていない消耗部品は、お手数ですが単品にて手配下さい。

This kit basis to the gasket kit.
Thers not kit mark parts articles of consumption single order.

00000214

Engine SAA6D102E-2 S/N 26340280-UP

CYLINDER HEAD GASKET KIT (#26302312-)

Item	Part No.	Description	Qty	Options
1	6738-K1-1200	GASKET KIT{CYLINDER HEAD}	1	SN:26302312--
	6732-11-4811	・ GASKET{AIR INTAKE HEATER}	2	SN:26302312--
	07005-01212	・ GASKET{AIR TUBE}	2	SN:26302312--
	07005-01012	・ GASKET{AIR TUBE}	2	SN:26302312--
	07005-01212	・ GASKET{FUEL TUBE (FILTER)}	4	SN:26302312--
	07005-01412	・ GASKET{FUEL TUBE (INJECTION PUMP)}	8	SN:26302312--
	6732-71-6260	・ GASKET{INJECTOR - SPILL}	12	SN:26302312--
	6738-11-4370	・ O-RING{TURBOCHARGER CONNECTOR}	1	SN:26302312--
	6735-11-4812	・ GASKET{INTAKE MANIFOLD COVER}	1	SN:26302312--
	6732-11-3850	・ SEAL{INJECTOR}	6	SN:26302312--
	6736-11-3420	・ SEAL{INJECTOR SHIM}	6	SN:26302312--
	6732-81-8830	・ GASKET{TURBOCHARGER GASKET}	1	SN:26302312--
	6732-41-4540	・ SEAL{VALVE STEM}	12	SN:26302312--
	6735-11-1821	・ GASKET{CYLINDER HEAD}	1	SN:26302312--
	6736-11-5820	・ GASKET{EXHAUST MANIFOLD}	6	SN:26302312--
	6732-61-6250	・ SEAL{THERMOSTAT}	1	SN:26302312--
	6732-61-6240	・ GASKET{THERMOSTAT}	1	SN:26302312--
	6207-51-7690	・ GASKET{TURBOCHARGER OIL DRAIN}	1	SN:26302312--
	6736-51-8710	・ O-RING{TURBOCHARGER OIL SUPPLY NIPPLE}	2	SN:26302312--
	6732-81-8860	・ O-RING{TURBOCHARGER OIL SUPPLY TUBE}	1	SN:26302312--
	6732-11-8181	・ GASKET{HEAD COVER}	6	SN:26302312--
	6732-11-8210	・ GASKET{CAMFOLLOWER COVER BOLT}	6	SN:26302312--
	6732-81-8220	・ CLAMP{TURBOCHARGER OUTLET PIPE}	1	SN:26302312--

Ref. A8126-01A1 Page 030920

KIT 詳細については次のページを参照して下さい。
See subsequent pages for details.

K-2 6738-K2-1200 シリンダ ブロック ガスケット キット
CYLINDER BLOCK GASKET KIT

このガスケットキットは、キット区分ごとの基本セットです。
部品明細書中、キットの記号が付いていない消耗部品は、お手数ですが単品にて手配下さい。

This kit basis to the gasket kit.
Thers not kit mark parts articles of consumption single order.

00000215

Engine SAA6D102E-2 S/N 26340280-UP

CYLINDER BLOCK GASKET KIT (#26302312-)

Item	Part No.	Description	Qty	Options
2	6738-K2-1200	GASKET KIT{CYLINDER BLOCK}	1	SN:26302312--
	6735-21-1960	・ O-RING{SPEED SENSOR}	1	SN:26302312--
	6215-81-9710	・ O-RING{M10 PLUG}	3	SN:26302312--
	6735-21-1930	・ O-RING{M14 PLUG}	1	SN:26302312--
	6731-21-1190	・ NOZZLE{COOLING NOZZLE}	6	SN:26302312--
	6732-21-3811	・ GASKET{GEAR CASE}	1	SN:26302312--
	6732-21-3870	・ O-RING{GEAR CASE}	1	SN:26302312--
	6732-21-3880	・ GASKET{GEAR HOUSING}	1	SN:26302312--
	6731-21-4220	・ SEAL{FRONT SEAL KIT}	1	SN:26302312--
	6736-21-3450	・ GASKET{FRONT COVER}	1	SN:26302312--
	6732-11-8210	・ GASKET{PUSH ROD COVER BOLT}	6	SN:26302312--
	6738-21-6180	・ O-RING{PUSH ROD COVER}	1	SN:26302312--
	6738-21-6650	・ GASKET{PUSH ROD COVER}	1	SN:26302312--
	6738-21-6660	・ GASKET{PUSH ROD COVER BOLT}	8	SN:26302312--
	07000-72110	・ O-RING{PTO COVER}	1	SN:26302312--
	6732-21-3220	・ SEAL{FRONT COVER}	1	SN:26302312--
	6735-21-4191	・ GASKET{REAR COVER}	1	SN:26302312--
	6735-K1-3001	・ SEAL{REAR SEAL KIT (SINGLE)}	1	SN:26302312--
	6732-21-4171	・ GASKET{REAR COVER}	1	SN:26302312--
	6732-21-4161	・ O-RING{BEARING CAP}	1	SN:26302312--
	07005-01012	・ GASKET{INJECTION PUMP OIL PIPING}	7	SN:26302312--
	6735-61-6411	・ GASKET	1	SN:26302312--
	6732-51-4420	・ O-RING{OIL PRESSURE PLUG}	1	SN:26302312--
	6732-51-4432	・ GASKET{OIL PRESSURE PLUG}	1	SN:26302312--
	6732-61-2311	・ GASKET{OIL COOLER CORE}	1	SN:26302312--
	6733-21-5520	・ GASKET{SUCTION TUBE}	1	SN:26302312--
	07005-02216	・ GASKET{OIL PAN DRAIN}	2	SN:26302312--
	6732-81-6811	・ GASKET{STARTER}	1	SN:26302312--
	6731-51-8150	・ O-RING{TURBOCHARGER DRAIN}	1	SN:26302312--
	6732-61-6130	・ SEAL{WATER INLET CONNECTION}	1	SN:26302312--
	6736-61-1520	・ SEAL{WATER PUMP}	1	SN:26302312--
	6136-21-5870	・ GASKET{OIL LEVEL SENSOR}	1	SN:26302312--
	6736-21-3360	・ SEAL{OIL FILTER}	1	SN:26302312--

Ref. A8126-02A1 Page 030930

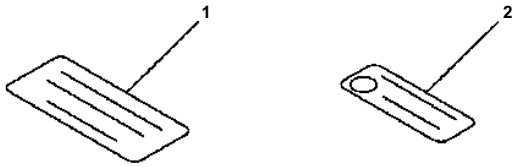

00026179

Engine SAA6D102E-2 S/N 26340280-UP

CAUTION PLATE (JAPANESE-ENGLISH) (#26331373-)

Item	Part No.	Description	Qty	Options
1	6738-81-2511	PLATE	1	SN:26331373--
2	600-021-1930	PLATE	1	SN:26331373--

Ref. A9810-01G0 Page 030940

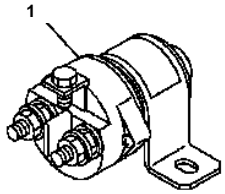

PWD0811

Engine SAA6D102E-2 S/N 26340280-UP

HEATER SWITCH (#26302312-)

Item	Part No.	Description	Qty	Options
1	600-815-2170	SWITCH	1	SN:26302312--

Ref. B9999-Z1E7 Page 030950

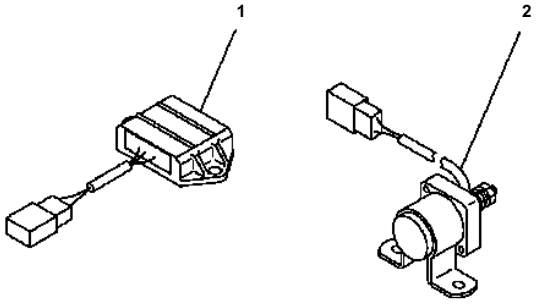

PJ6F105

Engine SAA6D102E-2 S/N 26340280-UP

GLOW TIMER (#26302312-)

Item	Part No.	Description	Qty	Options
1	600-815-9270	TIMER	1	SN:26302312--
2	600-815-7870	RELAY{GLOW}	1	SN:26302312--

Ref. B9999-01P9 Page 030960

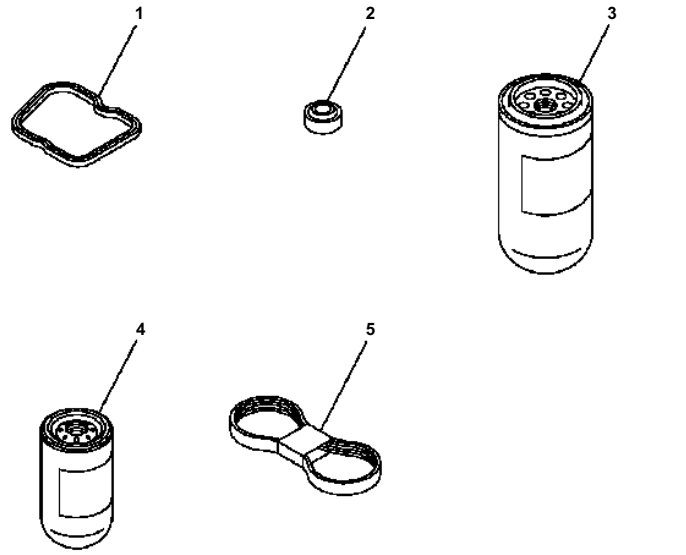

Engine SAA6D102E-2 S/N 26340280-UP

SPARE PARTS (#26302312-)

Item	Part No.	Description	Qty	Options
1	6732-11-8181	GASKET	6	SN:26302312--
2	6732-11-8210	GASKET	6	SN:26302312--
3	6736-51-5142	CARTRIDGE	1	SN:26302312--
4	6732-71-6112	CARTRIDGE{FUEL}	1	SN:26306697--
5	6732-81-6170	BELT	1	SN:26302312--

Ref. B9999-01R0 Page 030970

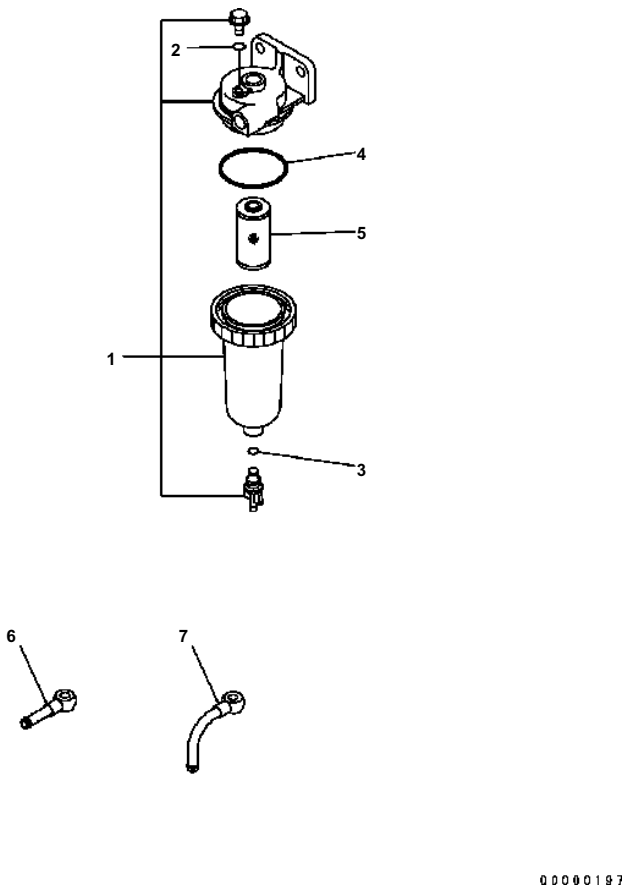

Engine SAA6D102E-2 S/N 26340280-UP

WATER SEPARATOR (#26302312-)

Item	Part No.	Description	Qty	Options
1	6738-71-9110	WATER SEPARATOR	1	SN:26302312--
2	07000-11006	・ .O-RING	1	SN:26302312--
3	07000-11007	・ .O-RING	1	SN:26302312--
4	07000-12065	・ .O-RING	1	SN:26302312--
5	22U-04-21260	・ .ELEMENT	1	SN:26302312--
6	6141-71-1710	JOINT	1	SN:26302312--
7	6144-71-5760	JOINT	1	SN:26302312--

Ref. B9999-01R1 Page 030980

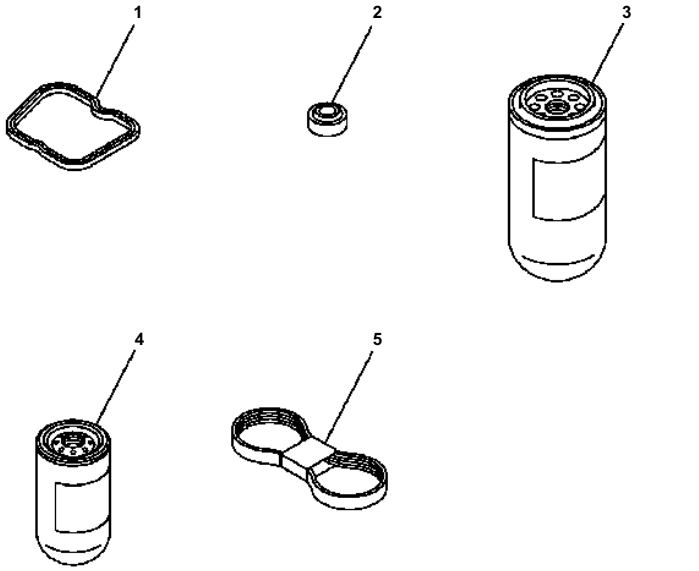

Engine SAA6D102E-2 S/N 26340280-UP

SPARE PARTS (FOR 35A, 60A ALTERNATOR) (#26333506-)

Item	Part No.	Description	Qty	Options
1	6732-11-8181	GASKET	6	SN:26333506--
2	6732-11-8210	GASKET	6	SN:26333506--
3	6736-51-5142	CARTRIDGE	1	SN:26333506--
4	6732-71-6112	CARTRIDGE{FUEL}	1	SN:26333506--
5	6734-81-6410	BELT	1	SN:26333506--

Ref. B9999-01T5 Page 030990

ENGINE RELATED PARTS

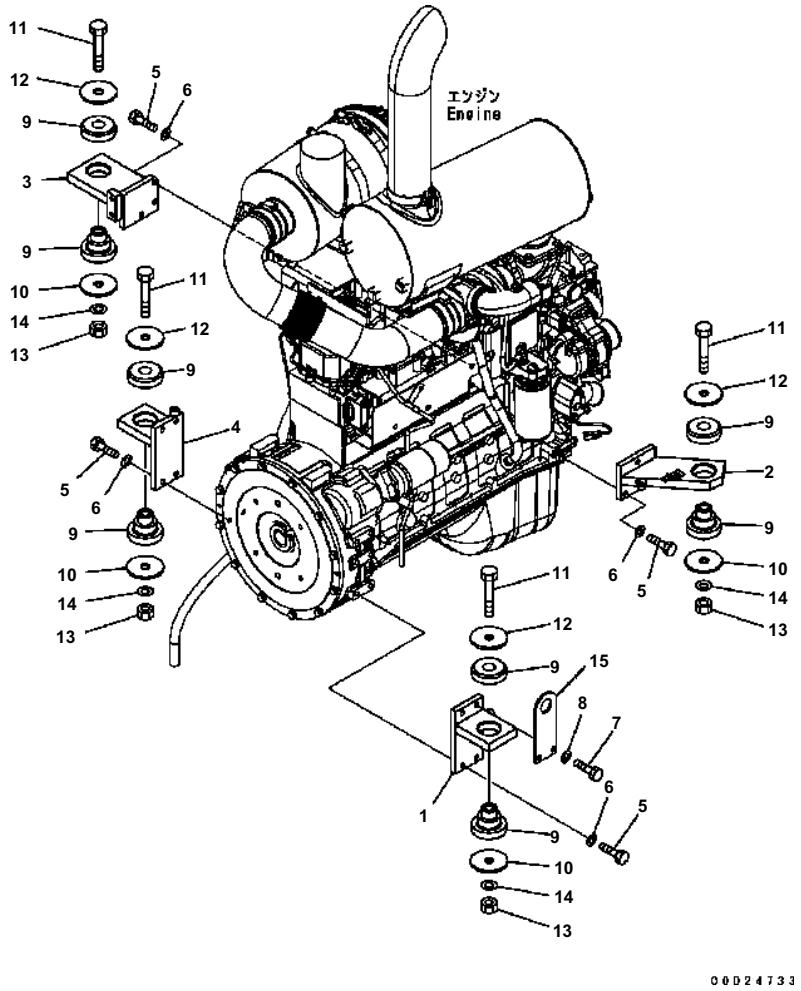

WA200-5 S/N B10001-UP

ENGINE MOUNT

Item	Part No.	Description	Qty	Options
1	418-01-32113	BRACKET	1	SN:B10001--
2	418-01-31123	BRACKET	1	SN:B10001--
3	418-01-31133	BRACKET	1	SN:B10001--
4	418-01-31143	BRACKET	1	SN:B10001--
5	01010-81240	BOLT	12	SN:B10001--
6	01643-31232	WASHER	12	SN:B10001--
7	01010-81250	BOLT	2	SN:B10001--
8	01643-31232	WASHER	2	SN:B10001--
9	418-01-11112	CUSHION	4	SN:B10001--
	418-01-11121	・ CUSHION	1	SN:B10001--
	418-01-11131	・ CUSHION	1	SN:B10001--
10	419-01-11162	WASHER	4	SN:B10001--
11	01011-82220	BOLT	4	SN:B10001--
12	419-01-11162	WASHER	4	SN:B10001--
13	01580-02218	NUT	4	SN:B10001--
14	01643-32260	WASHER	4	SN:B10001--
15	6732-21-1920	REAR HANGER	1	SN:B10001--

Ref. B0100-01A0 Page 030010

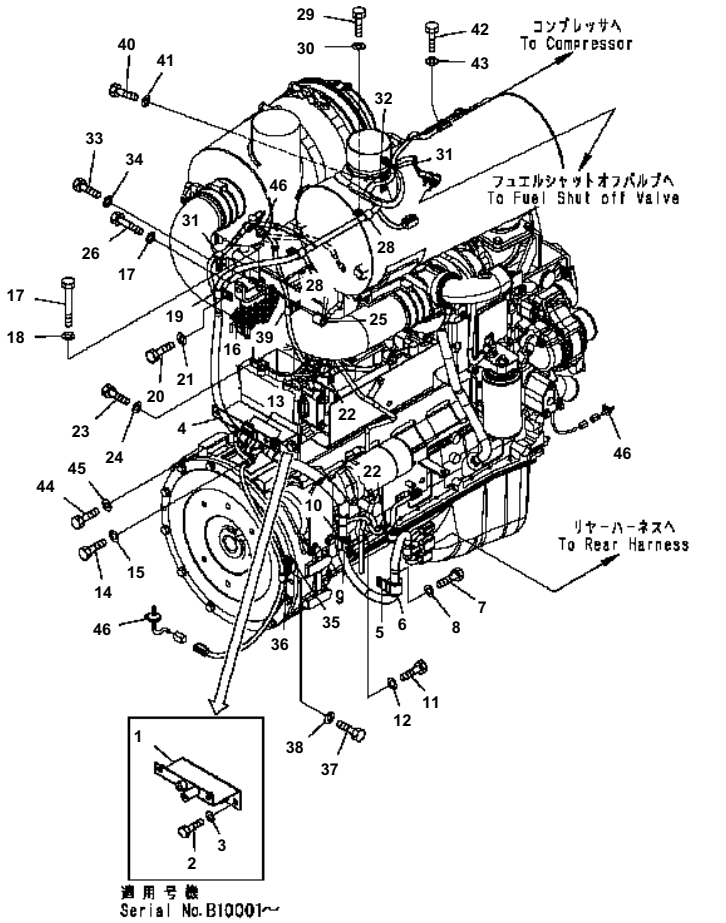

WA200-5 S/N B10001-UP

ENGINE HARNESS (1/2)

Item	Part No.	Description	Qty	Options
1	418-07-32113	BRACKET	1	SN:B10001--
2	01010-81220	BOLT	2	SN:B10001--
3	01643-31232	WASHER	2	SN:B10001--
4	418-06-32356	WIRING HARNESS	1	SN:B10001--
5	04434-52712	CLIP	1	SN:B10001--
6	07095-20420	CUSHION	1	SN:B10001--
7	01010-81020	BOLT	1	SN:B10001--
8	01643-31032	WASHER	1	SN:B10001--
9	04434-52712	CLIP	1	SN:B10001--
10	07095-20420	CUSHION	1	SN:B10001--
11	01010-81020	BOLT	1	SN:B10001--
12	01643-31032	WASHER	1	SN:B10001--
13	04434-51912	CLIP	2	SN:B10001--
14	01010-81020	BOLT	2	SN:B10001--
15	01643-31032	WASHER	2	SN:B10001--
16	426-07-11130	PLATE	1	SN:B10001--
17	01011-81215	BOLT	1	SN:B10001--
18	01643-31232	WASHER	1	SN:B10001--
19	04434-51412	CLIP	1	SN:B10001--
20	01010-81020	BOLT	1	SN:B10001--
21	01643-31032	WASHER	1	SN:B10001--
22	04434-51012	CLIP	2	SN:B10001--
23	01010-81020	BOLT	1	SN:B10001--
24	01643-31032	WASHER	1	SN:B10001--
25	195-33-11220	SPACER	1	SN:B10001--
26	01050-51245	BOLT	1	SN:B10001--
27	01643-31232	WASHER	1	SN:B10001--
28	04434-51412	CLIP	2	SN:B10001--
29	01010-81020	BOLT	2	SN:B10001--
30	01643-31032	WASHER	2	SN:B10001--
31	04434-51012	CLIP	2	SN:B10001--
32	04434-51412	CLIP	1	SN:B10001--
33	01010-81020	BOLT	2	SN:B10001--
34	01643-31032	WASHER	2	SN:B10001--
35	42A-942-1270	PLATE	1	SN:B10001--
36	04434-51012	CLIP	1	SN:B10001--
37	01010-81020	BOLT	1	SN:B10001--
38	01643-31032	WASHER	1	SN:B10001--
39	04434-51012	CLIP	1	SN:B10001--
40	01010-81020	BOLT	1	SN:B10001--

Ref. B0110-01A0 Page 030020

WA200-5 S/N B10001-UP

ENGINE HARNESS (1/2)

Item	Part No.	Description	Qty	Options
41	01643-31032	WASHER	1	SN:B10001--
42	01010-81020	BOLT	1	SN:B10001--
43	01643-31032	WASHER	1	SN:B10001--
44	01010-81016	BOLT	1	SN:B10001--
45	01643-31032	WASHER	1	SN:B10001--
46	08034-40521	BAND	3	SN:B10001--

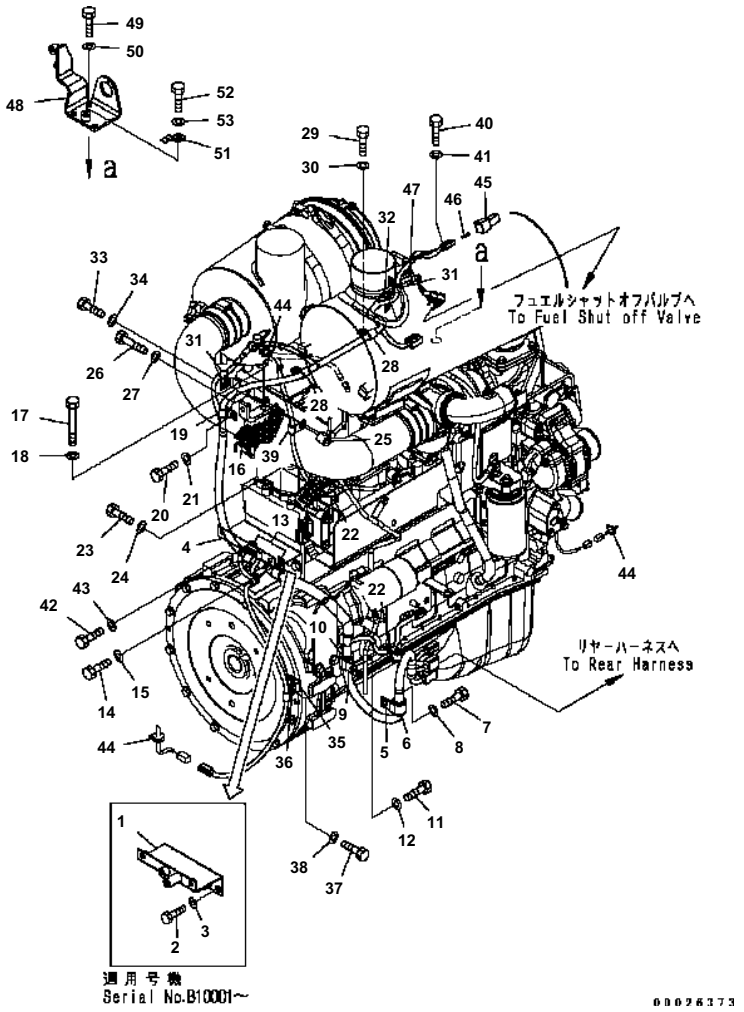

WA200-5 S/N B10001-UP

ENGINE HARNESS (1/2) (FOR HEATER)

Item	Part No.	Description	Qty	Options
1	418-07-32113	BRACKET	1	SN:B10001--
2	01010-81220	BOLT	2	SN:B10001--
3	01643-31232	WASHER	2	SN:B10001--
4	418-06-32356	WIRING HARNESS	1	SN:B10001--
5	04434-52712	CLIP	1	SN:B10001--
6	07095-20420	CUSHION	1	SN:B10001--
7	01010-81020	BOLT	1	SN:B10001--
8	01643-31032	WASHER	1	SN:B10001--
9	04434-52712	CLIP	1	SN:B10001--
10	07095-20420	CUSHION	1	SN:B10001--
11	01010-81020	BOLT	1	SN:B10001--
12	01643-31032	WASHER	1	SN:B10001--
13	04434-51912	CLIP	2	SN:B10001--
14	01010-81020	BOLT	2	SN:B10001--
15	01643-31032	WASHER	2	SN:B10001--
16	426-07-11130	PLATE	1	SN:B10001--
17	01011-81215	BOLT	1	SN:B10001--
18	01643-31232	WASHER	1	SN:B10001--
19	04434-51412	CLIP	1	SN:B10001--
20	01010-81020	BOLT	1	SN:B10001--
21	01643-31032	WASHER	1	SN:B10001--
22	04434-51012	CLIP	2	SN:B10001--
23	01010-81020	BOLT	1	SN:B10001--
24	01643-31032	WASHER	1	SN:B10001--
26	01050-51245	BOLT	1	SN:B10001--
27	01643-31232	WASHER	1	SN:B10001--
28	04434-51412	CLIP	2	SN:B10001--
29	01010-81020	BOLT	2	SN:B10001--
30	01643-31032	WASHER	2	SN:B10001--
31	04434-51012	CLIP	2	SN:B10001--
32	04434-51412	CLIP	1	SN:B10001--
33	01010-81020	BOLT	2	SN:B10001--
34	01643-31032	WASHER	2	SN:B10001--
35	42A-942-1270	PLATE	1	SN:B10001--
36	04434-51012	CLIP	1	SN:B10001--
37	01010-81020	BOLT	1	SN:B10001--
38	01643-31032	WASHER	1	SN:B10001--
39	04434-51912	CLIP	1	SN:B10001--
40	01010-81020	BOLT	1	SN:B10001--
41	01643-31032	WASHER	1	SN:B10001--

Ref. B0110-01A1 Page 030030

ENGINE HARNESS (1/2) (FOR HEATER)

Item	Part No.	Description	Qty	Options
42	01010-81016	BOLT	1	SN:B10001--
43	01643-31032	WASHER	1	SN:B10001--
44	08034-40521	BAND	3	SN:B10001--
45	08192-22100	CONNECTOR	1	SN:B10001--
46	08191-00770	PLUG	2	SN:B10001--
47	08034-20519	BAND	3	SN:B10001--
48	418-Z21-3150	BRACKET	1	SN:B10001--
49	01010-81025	BOLT	1	SN:B10001--
50	01643-31032	WASHER	1	SN:B10001--
51	08053-01510	CLIP	1	SN:B10001--
52	01010-81016	BOLT	1	SN:B10001--
53	01643-31032	WASHER	1	SN:B10001--

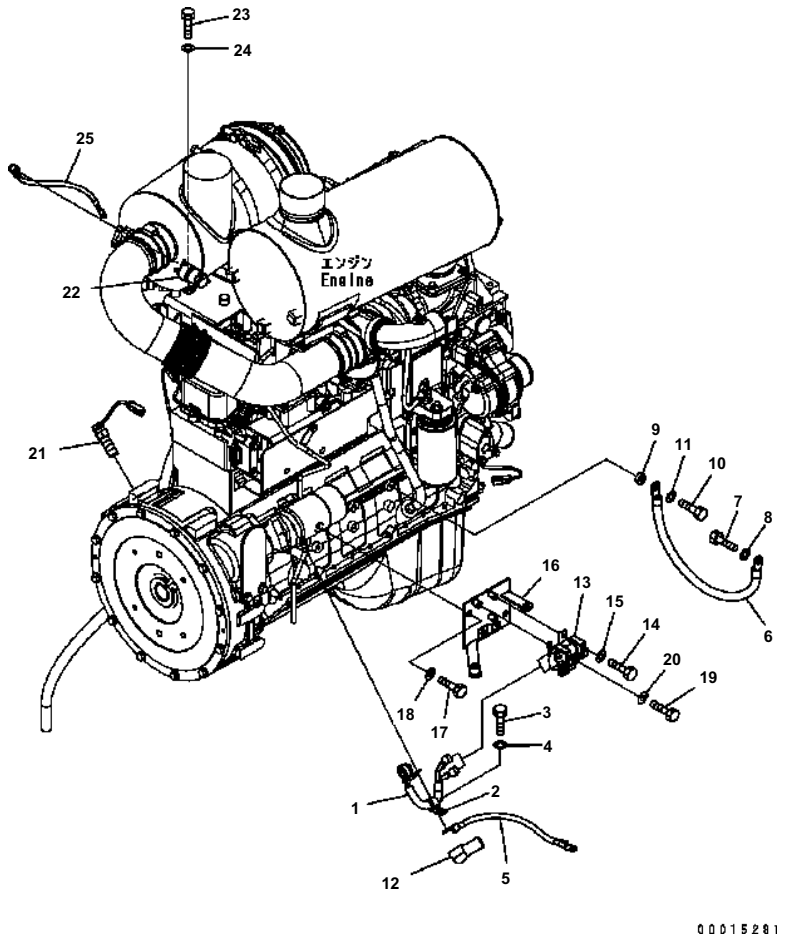

WA200-5 S/N B10001-UP

ENGINE HARNESS (2/2) (STARTER HARNESS AND SENSOR)

Item	Part No.	Description	Qty	Options
1	418-06-32274	WIRE	1	SN:B10001--
2	04434-51912	CLIP	1	SN:B10001--
3	01010-81020	BOLT	1	SN:B10001--
4	01643-31032	WASHER	1	SN:B10001--
5	08028-CB040	CABLE	1	SN:B10001--
6	418-06-32290	CABLE	1	SN:B10001--
7	01010-81020	BOLT	1	SN:B10001--
8	01643-31032	WASHER	1	SN:B10001--
9	6131-22-3750	BOSS	1	SN:B10001--
10	01010-81240	BOLT	1	SN:B10001--
11	01643-31232	WASHER	1	SN:B10001--
12	11Y-06-11630	CAP	1	SN:B10001--
13	11Y-06-11391	SWITCH	1	SN:B10001--
14	01010-80612	BOLT	2	SN:B10001--
15	01643-30623	WASHER	2	SN:B10001--
16	418-06-31284	BRACKET	1	SN:B10001--
17	01010-81220	BOLT	2	SN:B10001--
18	01643-31232	WASHER	2	SN:B10001--
19	01010-80816	BOLT	1	SN:B10001--
20	01643-30823	WASHER	1	SN:B10001--
21	7861-93-2330	SENSOR	1	SN:B10001--
22	600-815-2170	SWITCH {HEATER}	1	SN:B10001--
23	01010-80616	BOLT	2	SN:B10001--
24	01643-30623	WASHER	2	SN:B10001--
25	418-06-32281	WIRE	1	SN:B10001--

Ref. B0110-02A0 Page 030040

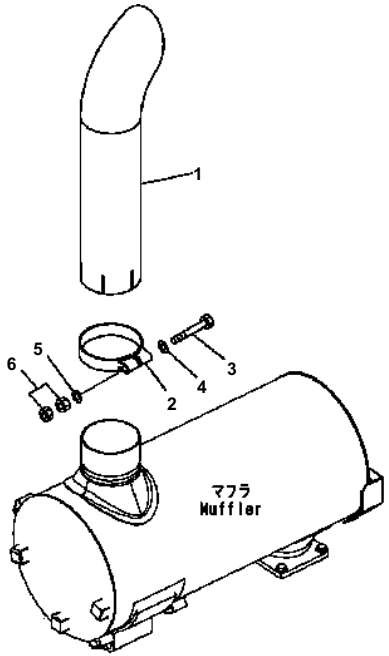

00007735

WA200-5 S/N B10001-UP

EXHAUST PIPE

Item	Part No.	Description	Qty	Options
1	419-02-31130	PIPE	1	SN:B10001--
2	419-02-31120	CLAMP	1	SN:B10001--
3	01010-81080	BOLT	1	SN:B10001--
4	01643-31032	WASHER	1	SN:B10001--
5	01643-31032	WASHER	1	SN:B10001--
6	01580-11008	NUT	2	SN:B10001--

Ref. B0300-01A0 Page 030050

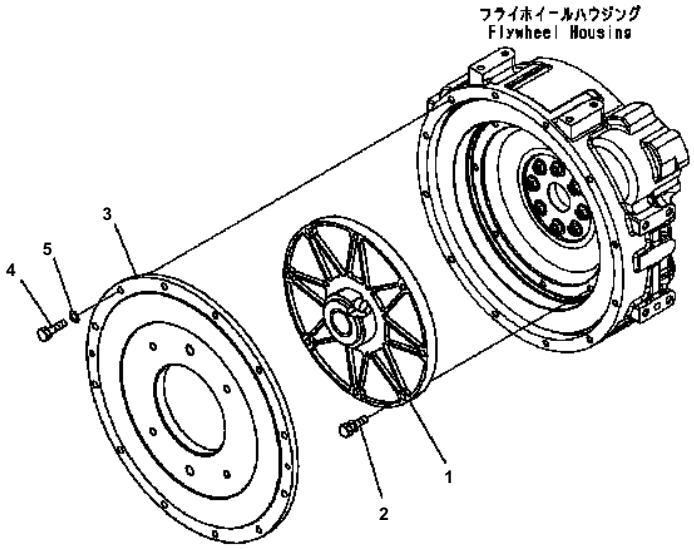

00D00005

WA200-5 S/N B10001-UP

DAMPER

Item	Part No.	Description	Qty	Options
1	418-12-31110	COUPLING	1	SN:B10001--
2	11Y-12-11130	BOLT	8	SN:B10001--
3	418-12-31121	COVER	1	SN:B10001--
4	01010-81045	BOLT	12	SN:B10001--
5	01643-31032	WASHER	12	SN:B10001--

Ref. B0600-01A0 Page 030060

COOLING SYSTEM

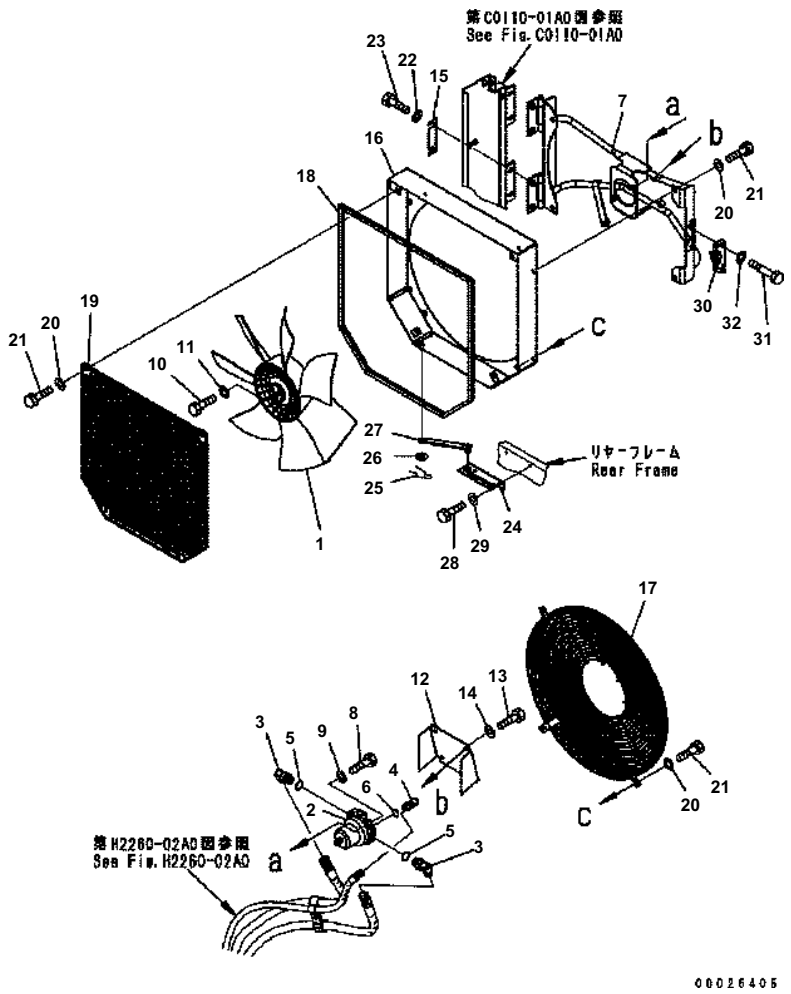

WA200-5 S/N B10001-UP

FAN DRIVE

Item	Part No.	Description	Qty	Options
1	419-03-33211	FAN ASS'Y	1	SN:B10001--
2	418-03-33241	FAN MOTOR	1	SN:B10001--
3	418-62-35111	ELBOW	2	SN:B10001--
4	21W-62-43980	ELBOW	1	SN:B10001--
5	07000-12018	O-RING	2	SN:B10001--
6	07000-12011	O-RING	1	SN:B10001--
7	418-03-33255	BRACKET	1	SN:B10001--
8	01010-81035	BOLT	2	SN:B10001--
9	01643-31032	WASHER	2	SN:B10001--
10	01010-80825	BOLT	1	SN:B10001--
11	01643-30823	WASHER	1	SN:B10001--
12	418-03-33264	COVER	1	SN:B10001--
13	01010-81020	BOLT	4	SN:B10001--
14	01643-31032	WASHER	4	SN:B10001--
15	418-03-33190	SHIM	3	SN:B10001--
16	418-03-33118	SHROUD	1	SN:B10001--
17	418-03-33123	GUARD {FAN}	1	SN:B10001--
18	418-03-33131	SEAL	1	SN:B10001--
19	418-03-33142	GUARD {FAN}	1	SN:B10001--
20	01643-31032	WASHER	12	SN:B10001--
21	01010-81020	BOLT	12	SN:B10001--
22	01643-31232	WASHER	4	SN:B10001--
23	01010-81230	BOLT	4	SN:B10001--
24	418-03-33161	PLATE	1	SN:B10001--
25	04052-11038	PIN {SNAP}	1	SN:B10001--
26	01640-21016	WASHER	1	SN:B10001--
27	418-03-33173	STOPPER	1	SN:B10001--
28	01010-81025	BOLT	2	SN:B10001--
29	01643-31032	WASHER	2	SN:B10001--
30	418-03-33280	LOCK	1	SN:B10001--
31	01010-80635	BOLT	4	SN:B10001--
32	01643-30623	WASHER	4	SN:B10001--

Ref. C0110-01A0 Page 060010

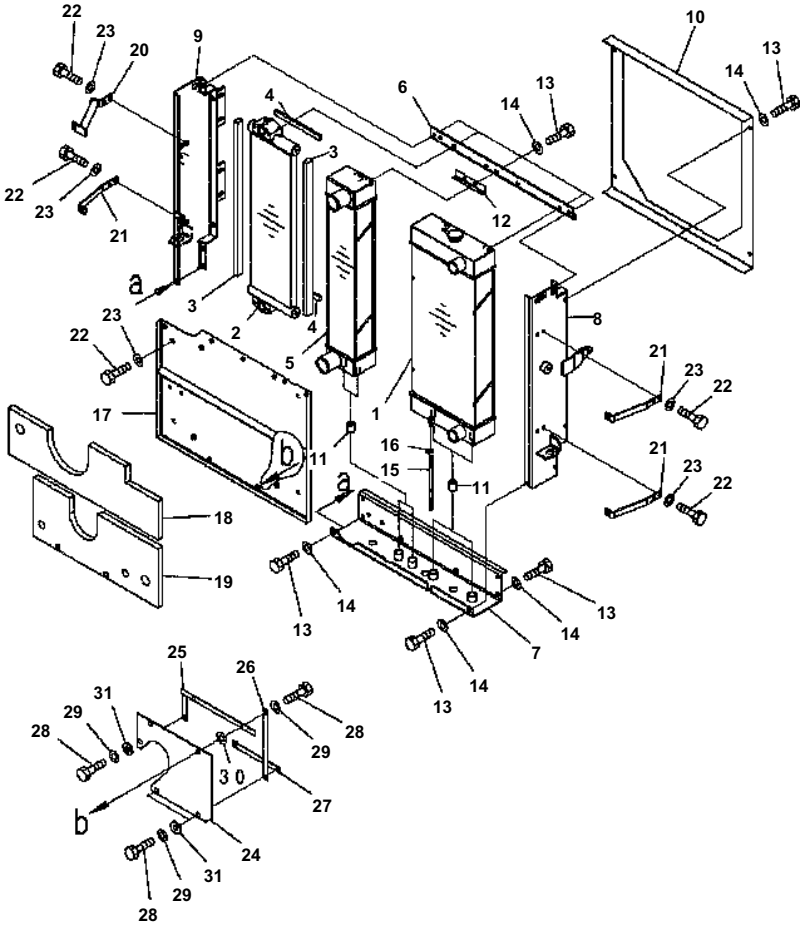

WA200-5 S/N B10001-UP

RADIATOR

Item	Part No.	Description	Qty	Options
	418-03-31106	RADIATOR ASS'Y	1	SN:B10001--
1	418-03-31113	· RADIATOR	1	SN:B10001--
	416-03-11170	· · CAP	1	SN:B10001--
2	418-03-31122	· OIL COOLER	1	SN:B10001--
3	TR1192-8673411	· · PACKING	2	SN:B10001--
4	TR1192-8673420	· · PACKING	2	SN:B10001--
5	418-03-31132	· AFTER COOLER	1	SN:B10001--
6	418-03-31413	· PLATE	1	SN:B10001--
7	418-03-31425	· FRAME	1	SN:B10001--
8	418-03-31434	· FRAME	1	SN:B10001--
9	418-03-31443	· FRAME	1	SN:B10001--
10	418-03-31453	· SHROUD	1	SN:B10001--
11	418-03-31480	· CUSHION	4	SN:B10001--
12	418-03-31491	· PLATE	1	SN:B10001--
13	01010-81020	· BOLT	20	SN:B10001--
14	01643-31032	· WASHER	20	SN:B10001--
15	418-03-31570	· HOSE	1	SN:B10001--
16	20Y-03-11330	· CLIP	1	SN:B10001--
17	417-03-31160	BUFFLE	1	SN:B10001--
18	418-03-31373	SHEET	1	SN:B10001--
19	417-03-31380	SHEET	1	SN:B10001--
21	418-03-31232	BRACKET	3	SN:B10001--
22	01010-81020	BOLT	4	SN:B10001--
23	01643-31032	WASHER	4	SN:B10001--
24	418-03-31622	SHEET	1	SN:B10001--
25	418-03-31631	BRACKET	1	SN:B10001--
26	418-03-31641	PLATE	1	SN:B10001--
27	418-03-31651	PLATE	1	SN:B10001--
28	01010-80825	BOLT	5	SN:B10001--
29	01643-30823	WASHER	5	SN:B10001--
30	203-54-56970	WASHER	3	SN:B10001--
31	417-03-31120	COLLAR	3	SN:B10001--

Ref. C0110-02A0 Page 060020

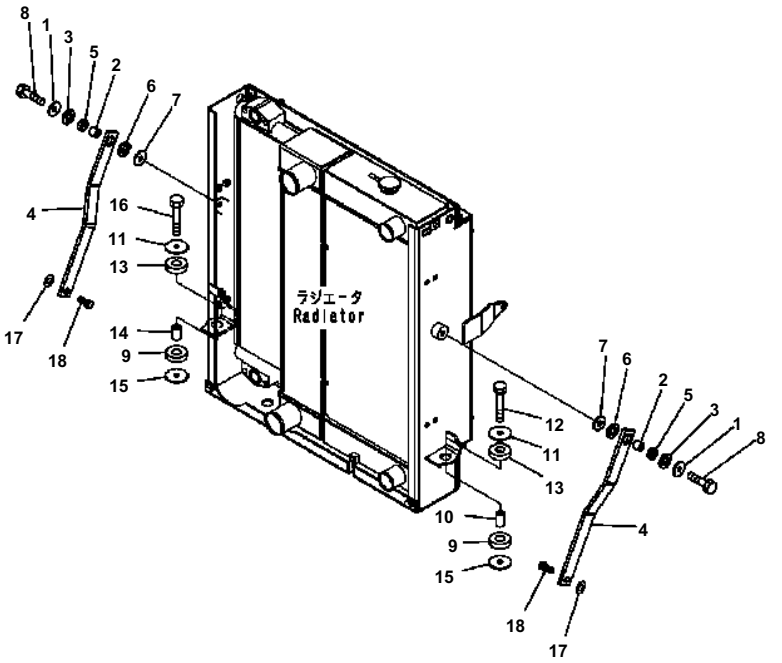

WA200-5 S/N B10001-UP

RADIATOR MOUNT

Item	Part No.	Description	Qty	Options
1	419-43-17920	WASHER	2	SN:B10001--
2	416-03-11270	SPACER	2	SN:B10001--
3	416-03-11260	CUSHION	2	SN:B10001--
4	418-03-31182	PLATE	2	SN:B10001--
5	416-03-11250	CUSHION	2	SN:B10001--
6	416-03-11260	CUSHION	2	SN:B10001--
7	419-43-17920	WASHER	2	SN:B10001--
8	01010-81245	BOLT	2	SN:B10001--
9	418-03-11390	CUSHION	2	SN:B10001--
10	415-03-11210	SPACER	1	SN:B10001--
11	416-03-11210	WASHER	2	SN:B10001--
12	01010-81265	BOLT	1	SN:B10001--
13	418-03-11390	CUSHION	2	SN:B10001--
14	415-03-11210	SPACER	1	SN:B10001--
15	416-03-11210	WASHER	2	SN:B10001--
16	01010-81265	BOLT	1	SN:B10001--
17	01643-31232	WASHER	2	SN:B10001--
18	416-03-11281	BOLT	2	SN:B10001--

Ref. C0110-03A0 Page 060030

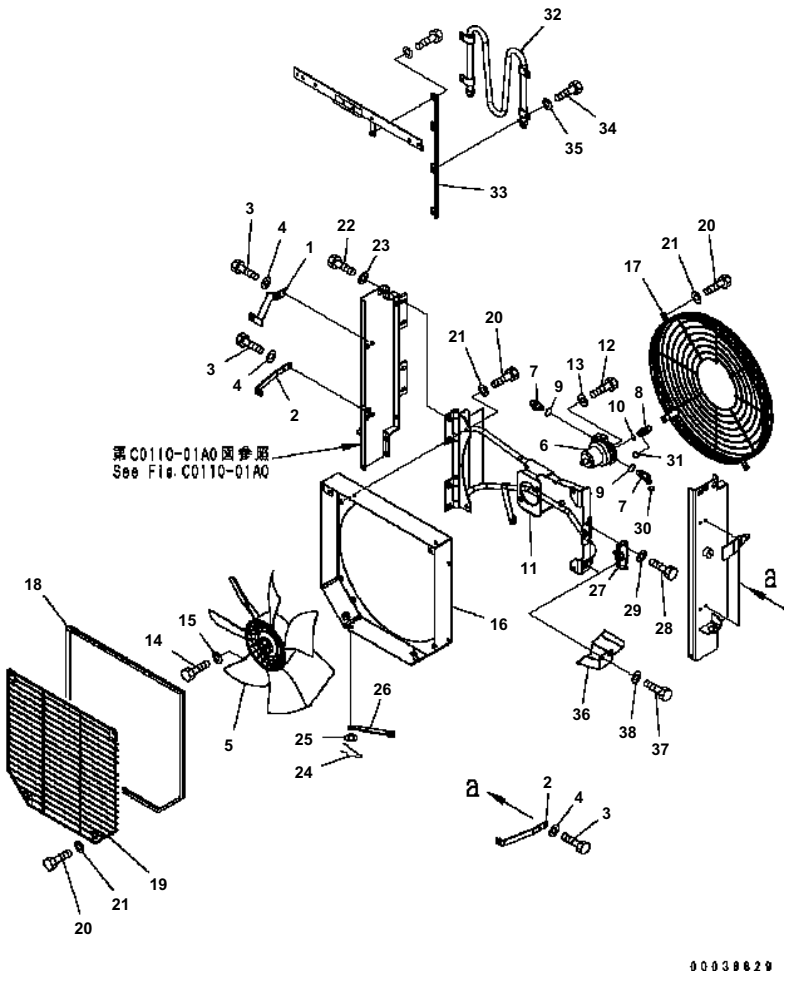

WA200-5 S/N B10001-UP

RADIATOR (RADIATOR BUFFLE AND FAN DRIVE)

Item	Part No.	Description	Qty	Options
1	418-03-31174	GRIP	1	SN:B10001--
2	418-03-31232	BRACKET	3	SN:B10001--
3	01010-81020	BOLT	8	SN:B10001--
4	01643-31032	WASHER	8	SN:B10001--
5	419-03-33211	FAN ASS'Y	1	SN:B10001--
6	418-03-33241	FAN MOTOR	1	SN:B10001--
7	418-62-35111	ELBOW	2	SN:B10001--
8	21W-62-43980	ELBOW	1	SN:B10001--
9	07000-12018	O-RING	2	SN:B10001--
10	07000-12011	O-RING	1	SN:B10001--
11	418-03-33255	BRACKET	1	SN:B10001--
12	01010-81035	BOLT	2	SN:B10001--
13	01643-31032	WASHER	2	SN:B10001--
14	01010-80825	BOLT	1	SN:B10001--
15	01643-30823	WASHER	1	SN:B10001--
16	418-03-33118	SHROUD	1	SN:B10001--
17	418-03-33123	GUARD	1	SN:B10001--
18	418-03-33131	SEAL	1	SN:B10001--
19	418-03-33142	GUARD	1	SN:B10001--
20	01010-81020	BOLT	12	SN:B10001--
21	01643-31032	WASHER	12	SN:B10001--
22	01010-81230	BOLT	4	SN:B10001--
23	01643-31232	WASHER	4	SN:B10001--
24	04052-11038	PIN	1	SN:B10001--
25	01640-21016	WASHER	1	SN:B10001--
26	418-03-33173	STOPPER	1	SN:B10001--
27	418-03-33280	LOCK	1	SN:B10001--
28	01010-80635	BOLT	4	SN:B10001--
29	01643-30623	WASHER	4	SN:B10001--
30	02896-11012	O-RING	1	SN:B10001--
31	02896-11008	O-RING	1	SN:B10001--
32	417-14-31121	TUBE	1	SN:B10001--
33	417-14-31131	BRACKET	1	SN:B10001--
34	01010-81025	BOLT	4	SN:B10001--
35	01643-31032	WASHER	4	SN:B10001--
36	416-Z03-3140	COVER	1	SN:B10001--
37	01010-81020	BOLT	2	SN:B10001--
38	01643-31032	WASHER	2	SN:B10001--

Ref. C0110-04A0 Page 060040

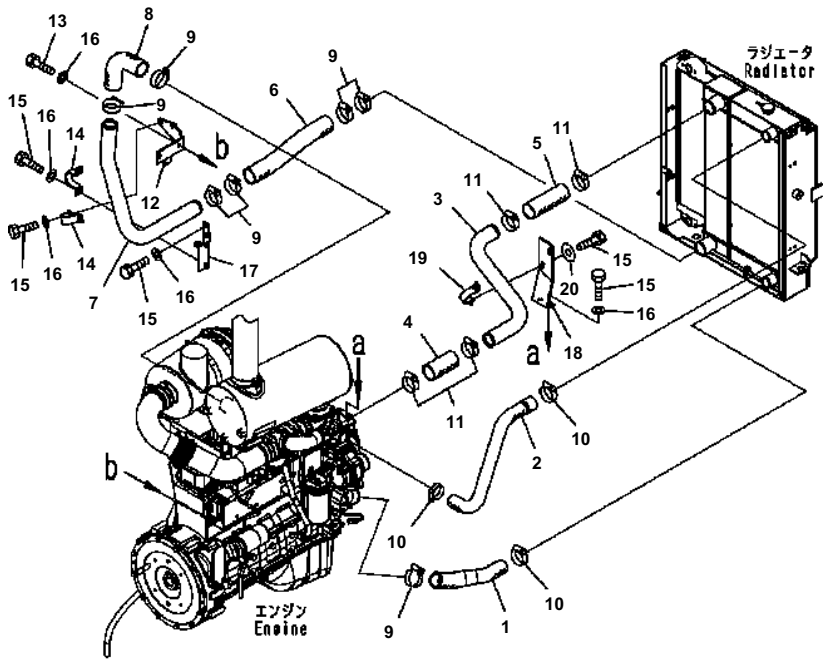

WA200-5 S/N B10001-UP

COOLING LINE

Item	Part No.	Description	Qty	Options
1	417-03-32111	HOSE	1	SN:B10001--
2	417-03-32121	HOSE	1	SN:B10001--
3	417-03-32150	HOSE	1	SN:B10001--
4	418-03-32180	HOSE	1	SN:B10001--
5	418-03-32250	HOSE	1	SN:B10001--
6	417-03-32141	HOSE	1	SN:B10001--
7	418-03-32153	PIPE	1	SN:B10001--
8	418-03-32160	HOSE	1	SN:B10001--
9	07289-00070	CLAMP	7	SN:B10001--
10	07289-00055	CLAMP	3	SN:B10001--
11	07299-00070	CLAMP	4	SN:B10001--
12	418-03-31294	BRACKET	1	SN:B10001--
13	01010-81225	BOLT	2	SN:B10001--
14	418-03-31251	PLATE	1	SN:B10001--
15	01010-81225	BOLT	10	SN:B10001--
16	01643-31232	WASHER	10	SN:B10001--
17	418-03-31222	BRACKET	1	SN:B10001--
18	417-03-32191	BRACKET	1	SN:B10001--
19	418-03-32261	PLATE	1	SN:B10001--
20	124-54-26540	WASHER	2	SN:B10001--

Ref. C0120-01A0 Page 060050

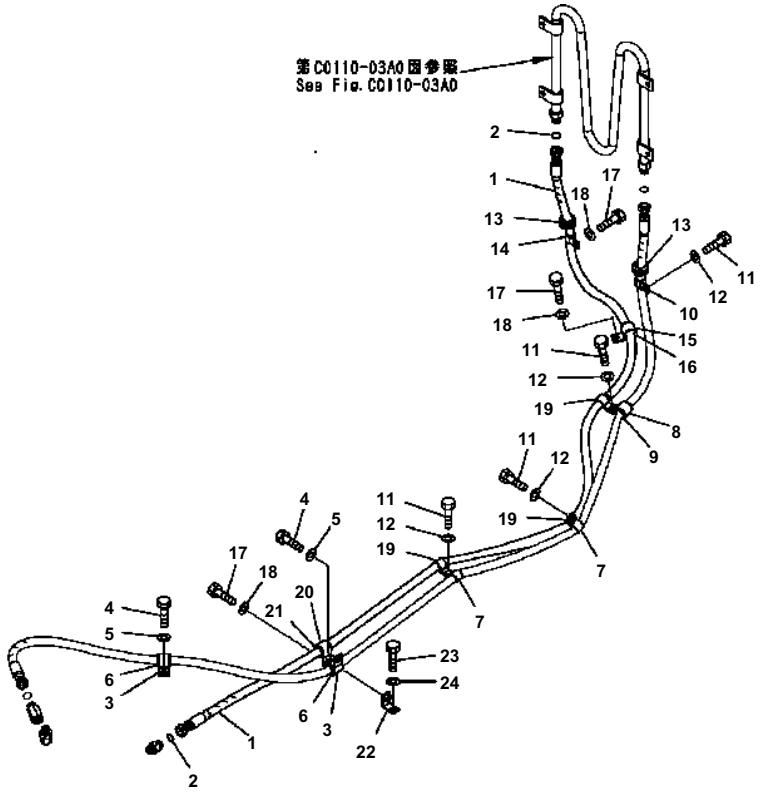

WA200-5 S/N B10001-UP

TRANSFER OIL COOLER

Item	Part No.	Description	Qty	Options
1	417-14-31221	HOSE	1	SN:B10001--
2	02896-21012	O-RING	2	SN:B10001--
3	04434-52712	CLIP	2	SN:B10001--
4	01010-81020	BOLT	2	SN:B10001--
5	01643-31032	WASHER	2	SN:B10001--
6	07095-20420	CUSHION	2	SN:B10001--
7	04434-51912	CLIP	2	SN:B10001--
8	04434-52712	CLIP	1	SN:B10001--
9	07095-20420	CUSHION	1	SN:B10001--
10	04434-51912	CLIP	1	SN:B10001--
11	01010-81020	BOLT	4	SN:B10001--
12	01643-31032	WASHER	4	SN:B10001--
13	418-06-12430	GROMMET	2	SN:B10001--
14	04434-51912	CLIP	1	SN:B10001--
15	04434-52712	CLIP	1	SN:B10001--
16	07095-20420	CUSHION	1	SN:B10001--
17	01010-81020	BOLT	3	SN:B10001--
18	01643-31032	WASHER	3	SN:B10001--
19	04434-51912	CLIP	3	SN:B10001--
20	04434-52712	CLIP	1	SN:B10001--
21	07095-20420	CUSHION	1	SN:B10001--
22	42A-16-11210	PLATE	1	SN:B10001--
23	01010-81020	BOLT	1	SN:B10001--
24	01643-31032	WASHER	1	SN:B10001--

Ref. C0400-01A0A Page 060060

FUEL TANK AND RELATED PARTS

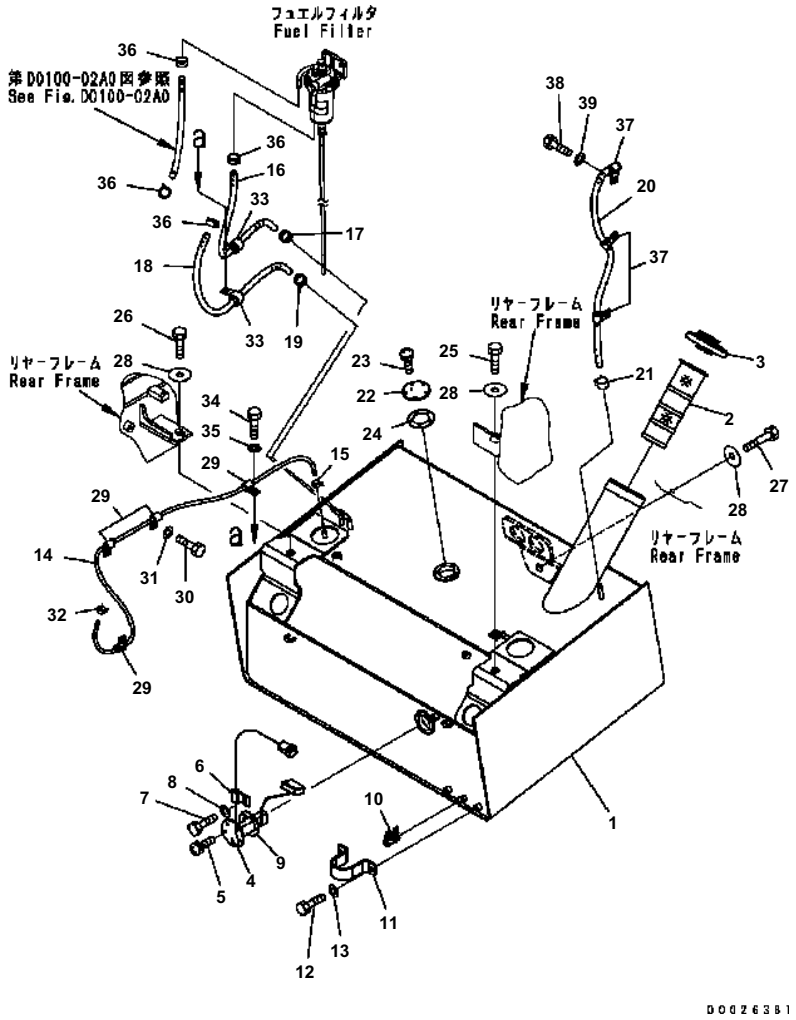

WA200-5 S/N B10001-UP

FUEL TANK

Item	Part No.	Description	Qty	Options
1	417-04-31115	FUEL TANK	1	SN:B10135--
	417-04-31114	FUEL TANK	1	SN:B10001--B10134
2	17M-04-41190	STRAINER	1	SN:B10001--
3	423-04-11362	CAP	1	SN:B10001--
	417-04-21230	・ PACKING	1	SN:B10001--
4	418-04-31133	SENSOR {FUEL}	1	SN:B10001--
5	01023-10510	SCREW	5	SN:B10001--
6	04434-50610	CLIP	2	SN:B10001--
7	01010-80812	BOLT	2	SN:B10001--
8	01643-30823	WASHER	2	SN:B10001--
9	418-04-31220	PACKING	1	SN:B10001--
10	363-04-11130	VALVE	1	SN:B10001--
11	417-04-10140	COVER	1	SN:B10001--
12	01010-80816	BOLT	2	SN:B10001--
13	01643-30823	WASHER	2	SN:B10001--
14	417-04-31330	HOSE ASS'Y	1	SN:B10001--
15	07285-00080	CLIP	1	SN:B10001--
16	418-04-31312	HOSE ASS'Y	1	SN:B10001--
17	11Y-09-11140	CLIP	1	SN:B10001--
18	418-04-31322	HOSE ASS'Y	1	SN:B10001--
19	11Y-09-11140	CLIP	1	SN:B10001--
20	07270-21090	TUBE	1	SN:B10001--
21	07285-00130	CLIP	1	SN:B10001--
22	418-04-31210	COVER	1	SN:B10001--
23	01023-10510	SCREW	5	SN:B10001--
24	418-04-31220	PACKING	1	SN:B10001--
25	01010-81635	BOLT	1	SN:B10001--
26	01010-81635	BOLT	1	SN:B10001--
27	01010-81665	BOLT	1	SN:B10001--
28	421-70-11280	WASHER	3	SN:B10001--
29	04434-51410	CLIP	4	SN:B10001--
30	01010-81020	BOLT	3	SN:B10001--
31	01643-31032	WASHER	3	SN:B10001--
32	07285-00080	CLIP	1	SN:B10001--
33	04434-52310	CLIP	2	SN:B10001--
34	01010-81020	BOLT	1	SN:B10001--
35	01643-31032	WASHER	1	SN:B10001--
36	11Y-09-11140	CLIP	1	SN:B10001--
37	04434-51510	CLIP	3	SN:B10001--
38	01010-81020	BOLT	3	SN:B10001--

Ref. D0100-01A0 Page 090010

WA200-5 S/N B10001-UP

FUEL TANK

Item	Part No.	Description	Qty	Options
39	01643-31032	WASHER	3	SN:B10001--

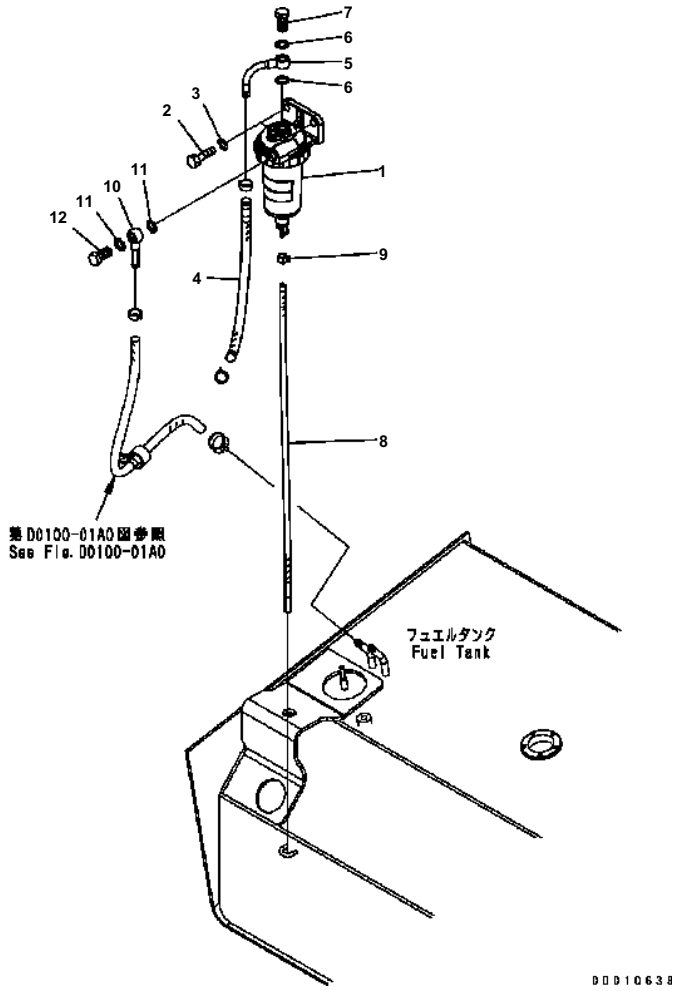

WA200-5 S/N B10001-UP

WATER SEPARATOR

Item	Part No.	Description	Qty	Options
1	6738-71-9110	WATER SEPARATOR	1	SN:B10001--
2	01010-81030	BOLT	2	SN:B10001--
3	01643-31032	WASHER	2	SN:B10001--
4	418-04-31341	HOSE ASS'Y	1	SN:B10001--
5	6144-71-5760	JOINT	1	SN:B10001--
6	07005-01412	GASKET	2	SN:B10001--
7	07206-31014	BOLT	1	SN:B10001--
8	07270-20760	TUBE	1	SN:B10001--
9	07285-00100	CLIP	1	SN:B10001--
10	6204-73-5750	JOINT	1	SN:B10001--
11	07005-01412	GASKET	2	SN:B10001--
12	07206-31014	BOLT	1	SN:B10001--

Ref. D0100-02A0 Page 090020

ELECTRICAL SYSTEM

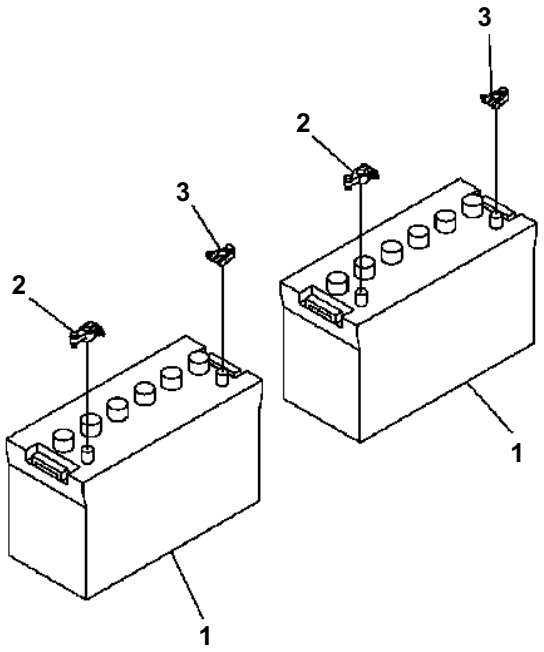

PAA7358

WA200-5 S/N B10001-UP

BATTERY

Item	Part No.	Description	Qty	Options
1	124-06-61540	BATTERY	1	SN:B10049--
	□124-06-51160	BATTERY	1	SN:B10001--B10048
2	08000-00000	TERMINAL	2	SN:B10001--
3	08000-00001	TERMINAL	8	SN:B10001--

Ref. E0110-01A0 Page 120010

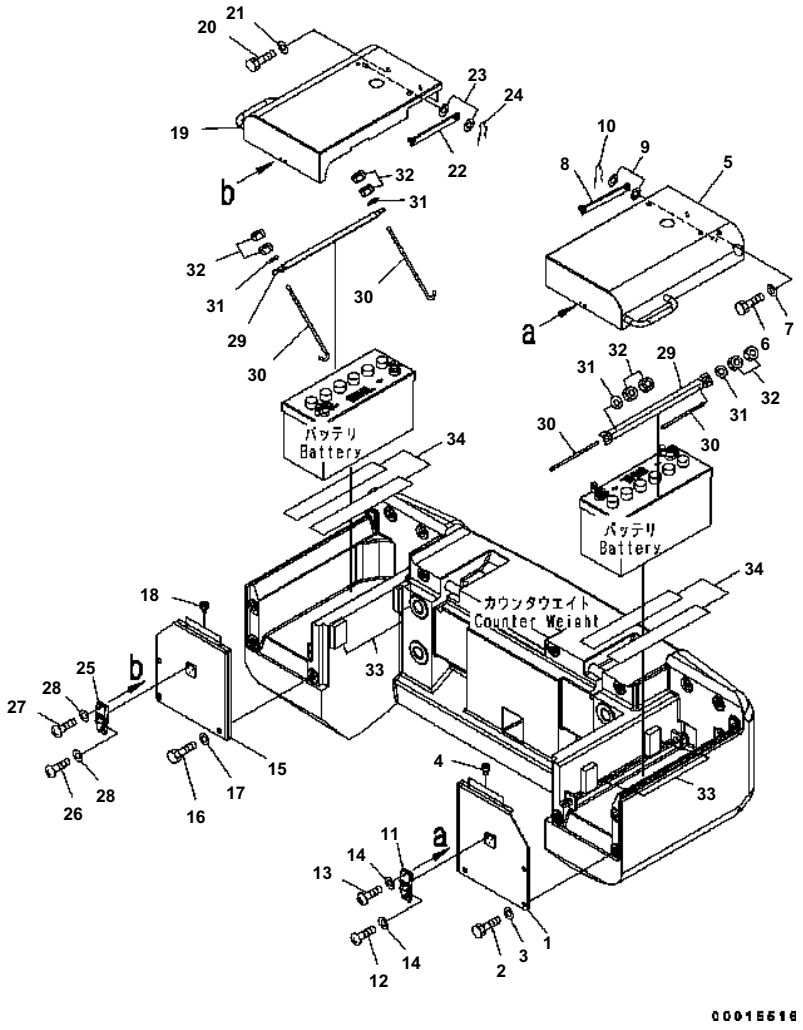

WA200-5 S/N B10001-UP

BATTERY BOX

Item	Part No.	Description	Qty	Options
1	418-06-31115	COVER {L.H.}	1	SN:B10001--
2	01010-81020	BOLT	3	SN:B10001--
3	01643-31032	WASHER	3	SN:B10001--
4	415-54-11980	CUSHION	2	SN:B10001--
5	418-06-31522	COVER	1	SN:B10001--
6	01010-81020	BOLT	2	SN:B10001--
7	01643-31032	WASHER	2	SN:B10001--
8	421-06-24230	BAR	1	SN:B10001--
9	01641-20812	WASHER	2	SN:B10001--
10	04052-10833	PIN {SNAP}	1	SN:B10001--
11	421-09-12322	HOLDER	1	SN:B10001--
12	01220-40408	SCREW	3	SN:B10001--
13	01220-40410	SCREW	2	SN:B10001--
14	01641-20405	WASHER	5	SN:B10001--
15	418-06-31125	COVER {R.H.}	1	SN:B10001--
16	01010-81020	BOLT	3	SN:B10001--
17	01643-31032	WASHER	3	SN:B10001--
18	415-54-11980	CUSHION	2	SN:B10001--
19	418-06-31532	COVER	1	SN:B10001--
20	01010-81020	BOLT	2	SN:B10001--
21	01643-31032	WASHER	2	SN:B10001--
22	421-06-24230	BAR	1	SN:B10001--
23	01641-20812	WASHER	2	SN:B10001--
24	04052-10833	PIN {SNAP}	1	SN:B10001--
25	421-09-12322	HOLDER	1	SN:B10001--
26	01220-40408	SCREW	3	SN:B10001--
27	01220-40410	SCREW	2	SN:B10001--
28	01641-20405	WASHER	5	SN:B10001--
29	418-06-31510	HOLDER	2	SN:B10001--
30	417-06-11123	ROD	4	SN:B10001--
31	01643-30823	WASHER	4	SN:B10001--
32	01580-10806	NUT	8	SN:B10001--
33	419-06-31370	RUBBER	4	SN:B10001--
34	08007-03538	CUSHION	4	SN:B10089--

Ref. E0120-01A1 Page 120020

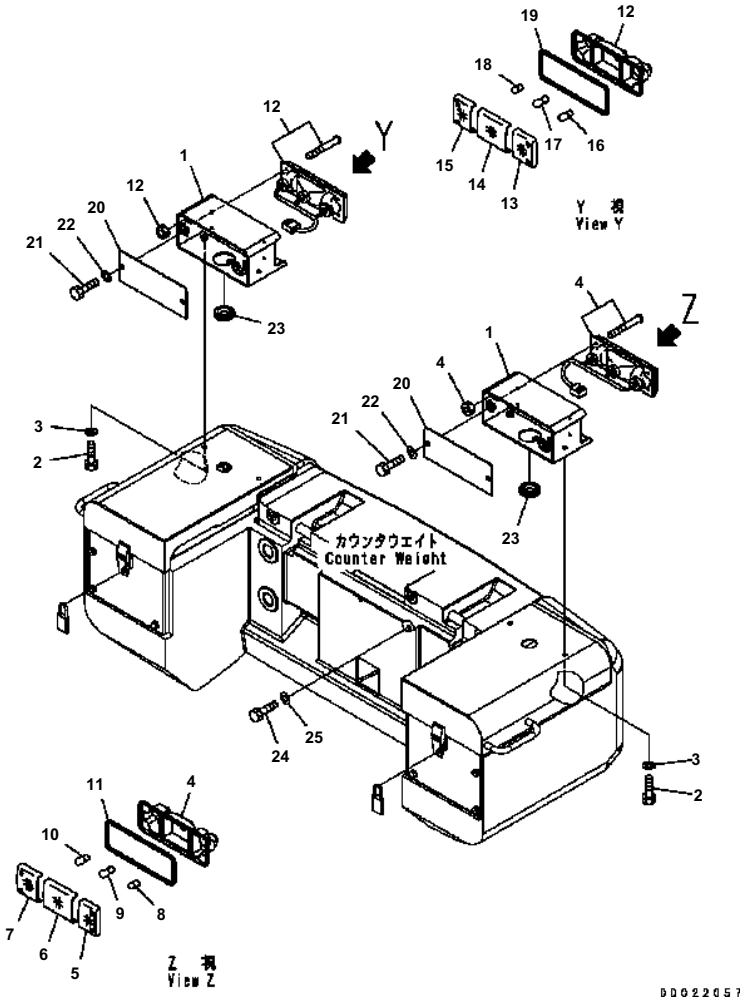

WA200-5 S/N B10001-UP

REAR COMBINATION LAMP

Item	Part No.	Description	Qty	Options
1	418-06-31541	BRACKET	2	SN:B10001--
2	01010-D1020	BOLT	4	SN:B10001--
3	01643-71032	WASHER	4	SN:B10001--
4	418-06-33230	LAMP ASS'Y	1	SN:B10001--
5	23A-06-21410	・ LENS	1	SN:B10001--
6	23A-06-21420	・ LENS	1	SN:B10001--
7	23A-06-21430	・ LENS	1	SN:B10001--
8	08105-12420	・ BULB¤ 25W	1	SN:B10001--
9	08104-12420	・ BULB¤ 25/10W	1	SN:B10001--
10	08110-12410	・ BULB¤ 12W	1	SN:B10001--
11	23A-06-21440	・ GASKET	1	SN:B10001--
12	418-06-33260	LAMP ASS'Y	1	SN:B10001--
13	23A-06-21510	・ LENS	1	SN:B10001--
14	23A-06-21520	・ LENS	1	SN:B10001--
15	23A-06-21530	・ LENS	1	SN:B10001--
16	08105-12420	・ BULB¤ 25W	1	SN:B10001--
17	08104-12420	・ BULB¤ 25/10W	1	SN:B10001--
18	08110-12410	・ BULB¤ 12W	1	SN:B10001--
19	23A-06-21440	・ GASKET	1	SN:B10001--
20	419-06-23420	PLATE	2	SN:B10001--
21	01010-D1020	BOLT	4	SN:B10001--
22	01643-71032	WASHER	4	SN:B10001--
23	08037-03614	GROMMET	2	SN:B10001--
24	01010-D1020	BOLT	2	SN:B10001--
25	01643-71032	WASHER	2	SN:B10001--

Ref. E0120-02A1 Page 120030

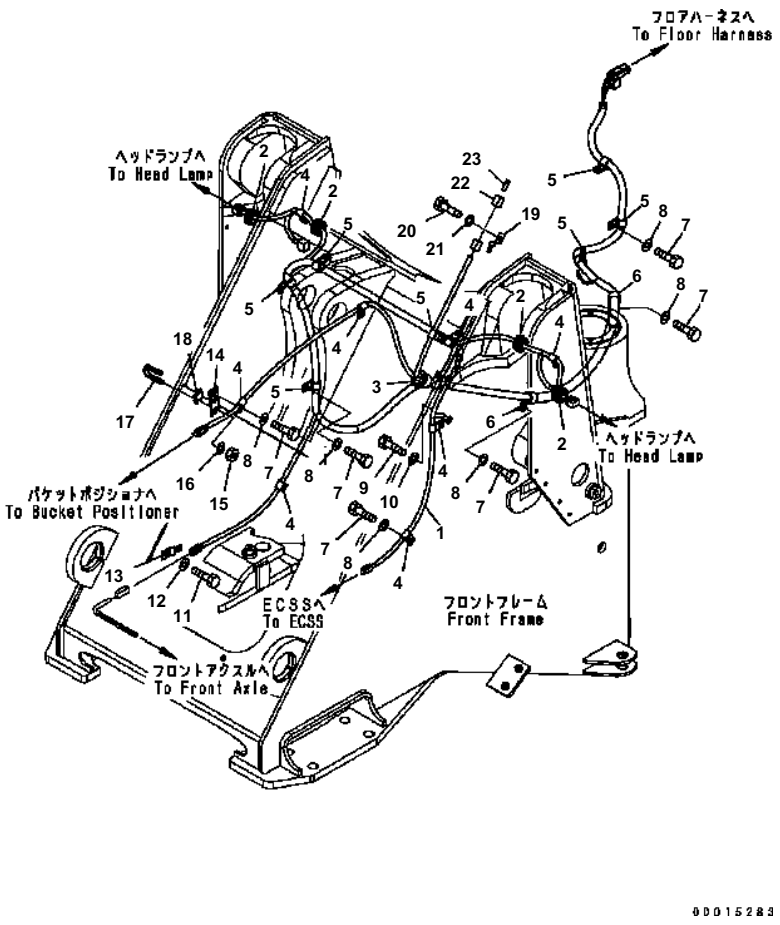

WA200-5 S/N B10001-UP

FRONT HARNESS

Item	Part No.	Description	Qty	Options
1	417-06-32144	WIRING HARNESS	1	SN:B10001--
2	418-06-12430	GROMMET	4	SN:B10001--
3	426-09-11210	GROMMET	1	SN:B10001--
4	04434-51012	CLIP	8	SN:B10001--
5	04434-51712	CLIP	8	SN:B10001--
6	04434-52312	CLIP	2	SN:B10001--
7	01010-81020	BOLT	16	SN:B10001--
8	01643-31032	WASHER	16	SN:B10001--
9	01010-81016	BOLT	2	SN:B10001--
10	01643-31032	WASHER	2	SN:B10001--
11	01010-81020	BOLT	1	SN:B10001--
12	01643-31032	WASHER	1	SN:B10001--
13	08193-21012	CLIP	1	SN:B10001--
14	417-06-32280	BRACKET	1	SN:B10001--
15	01597-01009	NUT	2	SN:B10001--
16	01643-31032	WASHER	2	SN:B10001--
17	07283-32738	CLIP	1	SN:B10001--
18	07283-52737	SEAT	1	SN:B10001--
19	08193-21012	CLIP	1	SN:B10001--
20	01010-81020	BOLT	1	SN:B10001--
21	01643-31032	WASHER	1	SN:B10001--
22	08192-23100	CONNECTOR	1	SN:B10001--
23	08191-00770	PLUG	3	SN:B10001--

Ref. E0200-01A4 Page 120040

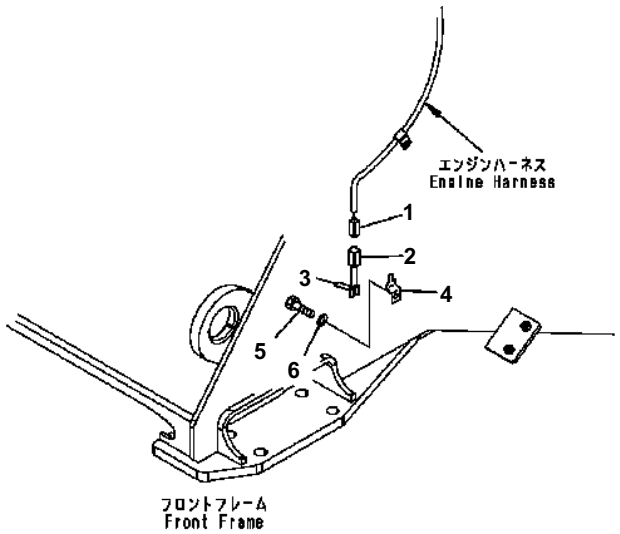

WA200-5 S/N B10001-UP

FRONT HARNESS (E.C.S.S. LESS)

Item	Part No.	Description	Qty	Options
1	08192-12300	WEDGE	1	SN:B10001--
2	08192-22100	CONNECTOR	1	SN:B10001--
3	08191-00770	PLUG	2	SN:B10001--
4	08193-21012	CLIP	1	SN:B10001--
5	01010-81220	BOLT	1	SN:B10001--
6	01643-31232	WASHER	1	SN:B10001--

Ref. E0200-03A1 Page 120050

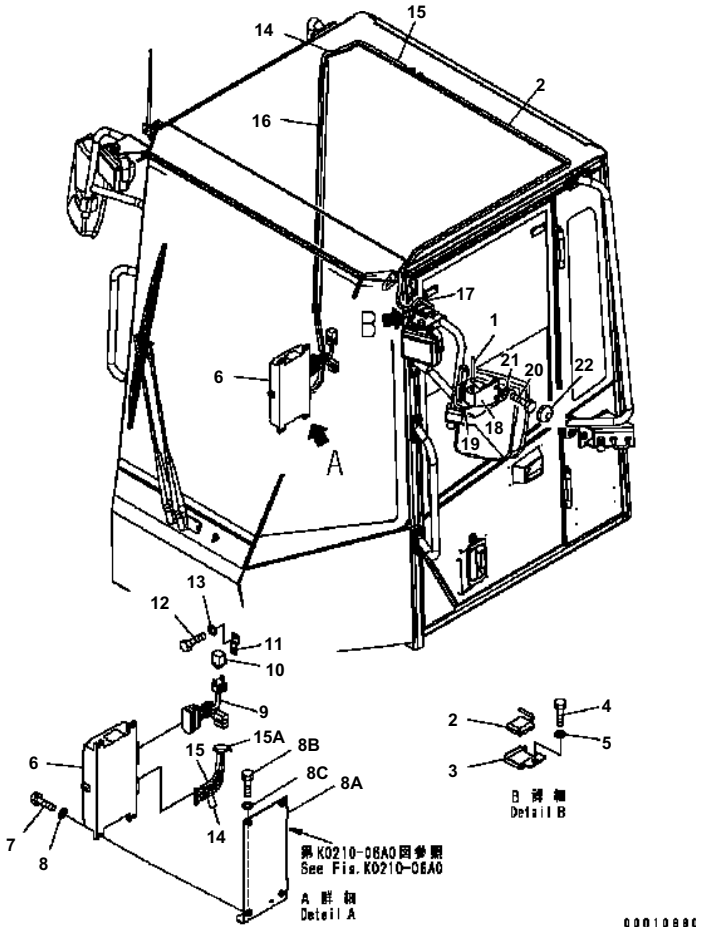

WA200-5 S/N B10001-UP

KOMTRAX

Item	Part No.	Description	Qty	Options
1	8A13-10-2100	ANTENNA {FILM}	1	SN:B10001--
2	8A13-10-1310	ANTENNA {GPS}	1	SN:B10232--
	8A13-10-2310	ANTENNA {GPS}	1	SN:B10001--B10231
3	418-925-3490	BRACKET	1	SN:B10001--
4	01010-80816	BOLT	1	SN:B10001--
5	01643-30823	WASHER	1	SN:B10001--
6	7826-20-7033	CONTROLLER	1	SN:B10234--
	7826-20-7032	CONTROLLER	1	SN:B10052--B10233
	7826-20-7031	CONTROLLER	1	SN:B10001--B10051
7	01010-80825	BOLT	4	SN:B10001--
8	01643-30823	WASHER	4	SN:B10001--
8A	419-54-32681	BRACKET	1	SN:B10001--
8B	01010-80816	BOLT	4	SN:B10001--
8C	01643-30823	WASHER	4	SN:B10001--
9	419-06-31392	WIRING HARNESS	1	SN:B10001--
10	569-06-61960	RELAY	1	SN:B10001--
11	287-06-16420	BRACKET	1	SN:B10001--
12	01010-80610	BOLT	1	SN:B10001--
13	01643-30623	WASHER	1	SN:B10001--
14	7826-20-9311	CABLE	1	SN:B10327--
	7826-20-9310	CABLE	1	SN:B10001--B10326
15	8A13-10-1410	CABLE	1	SN:B10001--
15A	08059-00310	CLIP	2	SN:B10001--
16	21J-54-14782	DUCT	1	SN:B10001--
17	08034-40521	BAND	3	SN:B10001--
18	421-925-3180	COVER	1	SN:B10001--
19	08017-30710	CONDUIT	1	SN:B10001--
20	01435-01020	BOLT	2	SN:B10001--
21	01643-31032	WASHER	2	SN:B10001--
22	363-54-31450	CAP	2	SN:B10001--

Ref. E0201-01A0 Page 120051

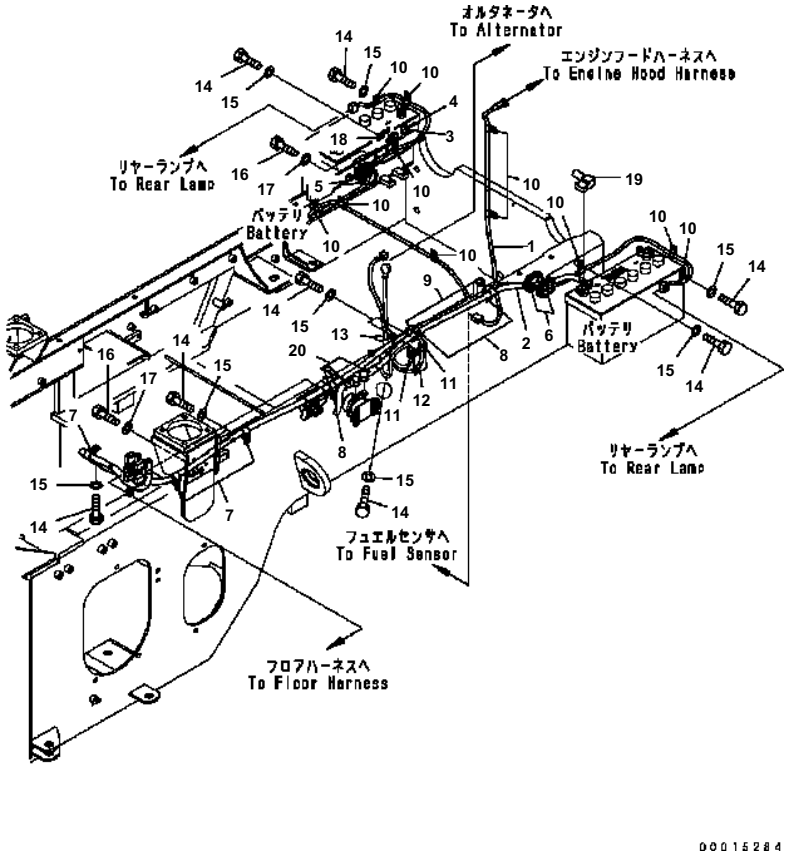

WA200-5 S/N B10001-UP

REAR HARNESS (1/4) (MAIN HARNESS)

Item	Part No.	Description	Qty	Options
1	418-06-32347	WIRING HARNESS	1	SN:B10001--
2	418-06-B1130	CABLE	1	SN:B10001--
3	08192-22100	CONNECTOR	1	SN:B10001--
4	08191-00770	PLUG	2	SN:B10001--
5	08037-03620	GROMMET	2	SN:B10001--
6	426-09-11230	GROMMET	2	SN:B10001--
7	04434-52312	CLIP	3	SN:B10001--
8	04434-51912	CLIP	3	SN:B10001--
9	04434-51712	CLIP	2	SN:B10001--
10	04434-51012	CLIP	11	SN:B10001--
11	04434-51712	CLIP	2	SN:B10001--
12	07095-20211	CUSHION	2	SN:B10001--
13	04434-51012	CLIP	2	SN:B10001--
14	01010-81020	BOLT	17	SN:B10001--
15	01643-31032	WASHER	17	SN:B10001--
16	01010-81016	BOLT	2	SN:B10001--
17	01643-31032	WASHER	2	SN:B10001--
18	08193-21012	CLIP	1	SN:B10001--
19	14X-06-12280	COVER	1	SN:B10001--
20	08038-06031	CAP	2	SN:B10001--

Ref. E0202-01A2 Page 120060

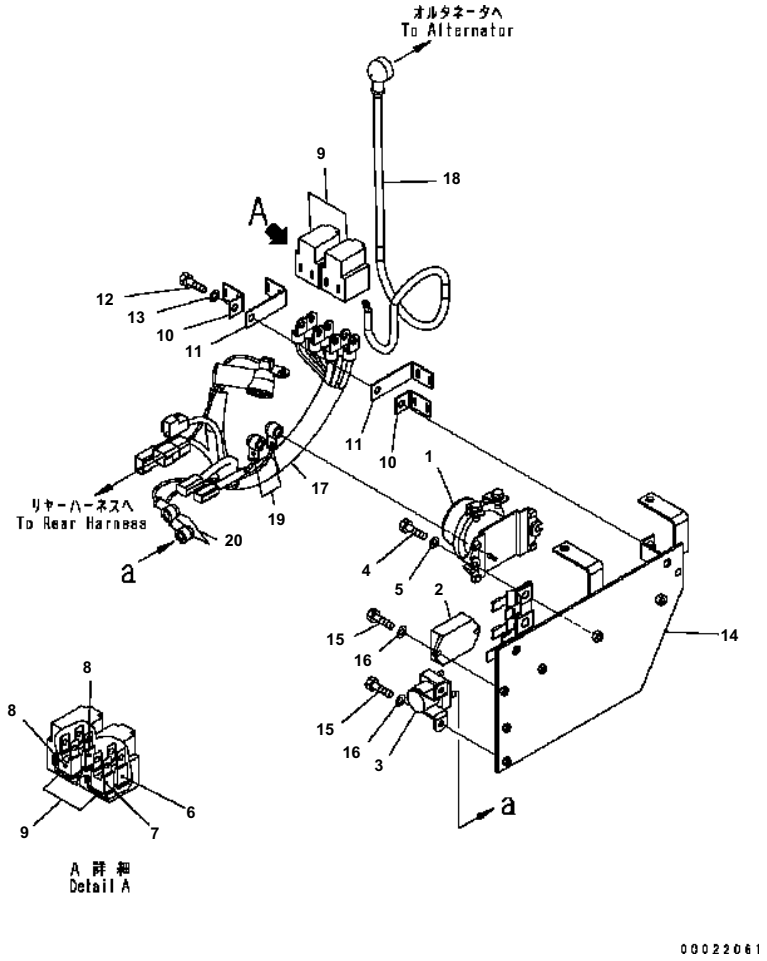

WA200-5 S/N B10001-UP

REAR HARNESS (2/4) (RELAY FUSE AND SUB HARNESS)

Item	Part No.	Description	Qty	Options
1	08088-30000	SWITCH	1	SN:B10001--
2	600-815-9270	TIMER	1	SN:B10001--
3	600-815-7870	RELAY	1	SN:B10001--
4	01010-80830	BOLT	2	SN:B10001--
5	01643-30823	WASHER	2	SN:B10001--
6	421-06-22830	FUSE¤ 120A	1	SN:B10001--
7	421-06-22820	FUSE¤ 80A	1	SN:B10001--
8	421-06-22840	FUSE¤ 30A	2	SN:B10001--
9	421-06-22880	HOLDER	2	SN:B10001--
10	421-06-22910	BRACKET	2	SN:B10001--
11	421-06-22920	BRACKET	2	SN:B10001--
12	01010-80820	BOLT	1	SN:B10001--
13	01643-30823	WASHER	1	SN:B10001--
14	418-06-32414	BRACKET	1	SN:B10001--
15	01010-80616	BOLT	4	SN:B10001--
16	01643-30623	WASHER	4	SN:B10001--
17	419-06-32332	WIRING HARNESS	1	SN:B10001--
18	418-06-32261	WIRE	1	SN:B10001--
19	08038-00519	CAP	2	SN:B10001--
20	08038-00518	CAP	2	SN:B10001--

Ref. E0202-02A0 Page 120070

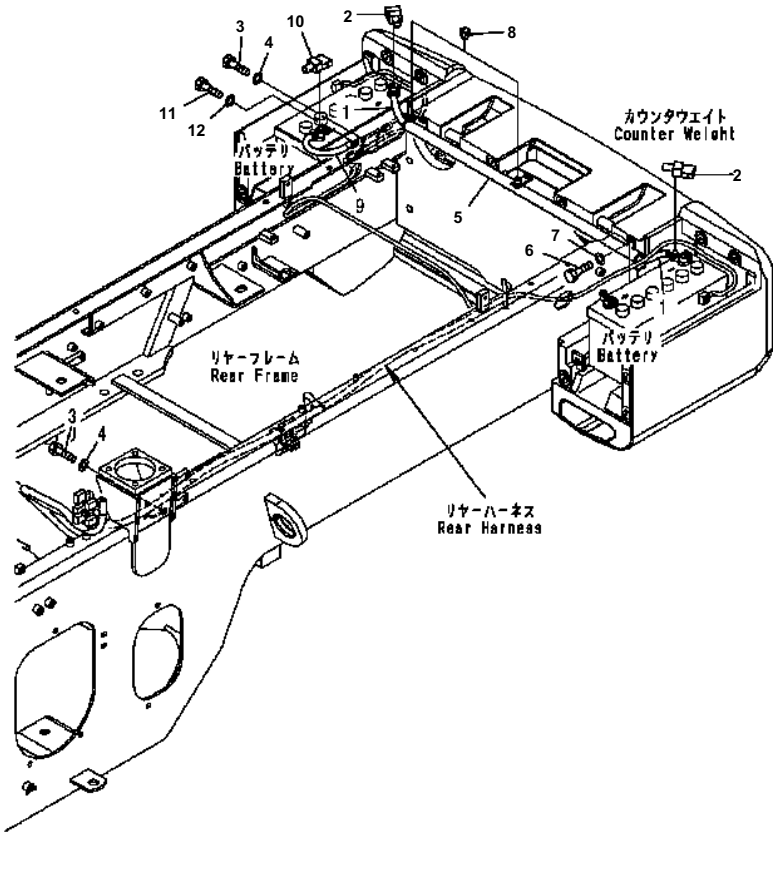

WA200-5 S/N B10001-UP

REAR HARNESS (3/4) (BATTERY CABLE)

Item	Part No.	Description	Qty	Options
1	418-06-B1110	CABLE	1	SN:B10001--
2	14X-06-12280	CAP	2	SN:B10056--
	08038-42009	CAP	2	SN:B10001--B10055
3	01010-81020	BOLT	2	SN:B10001--
4	01643-31032	WASHER	2	SN:B10001--
5	418-06-31422	PIPE	1	SN:B10001--
6	01010-81020	BOLT	2	SN:B10001--
7	01643-31032	WASHER	2	SN:B10001--
8	07049-00811	PLUG	2	SN:B10001--
9	418-06-B1120	CABLE	1	SN:B10001--
10	08038-22009	CAP	1	SN:B10001--
11	01010-81020	BOLT	1	SN:B10001--
12	01643-31032	WASHER	1	SN:B10001--

Ref. E0202-03A2 Page 120080

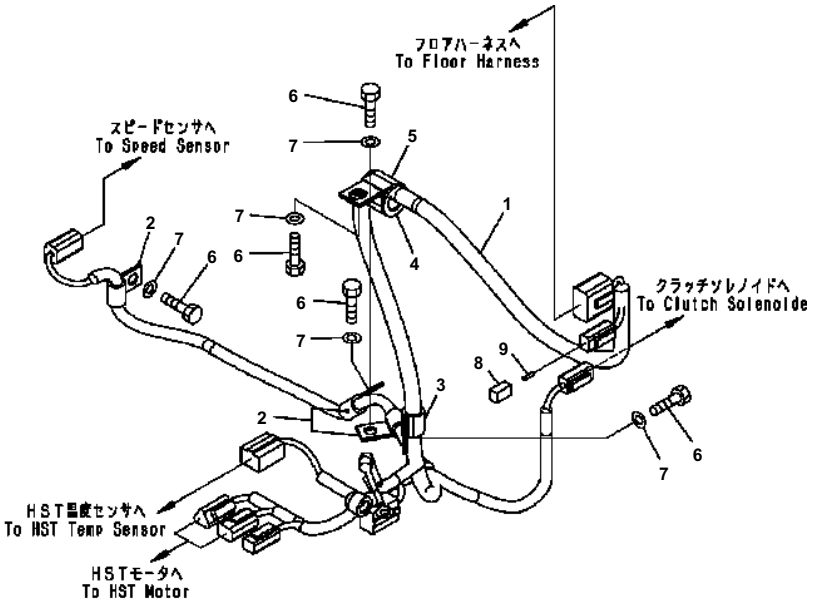

WA200-5 S/N B10001-UP

REAR HARNESS (4/4) (HST HARNESS)

Item	Part No.	Description	Qty	Options
1	417-06-32362	WIRING HARNESS	1	SN:B10001--
2	04434-51412	CLIP	3	SN:B10001--
3	04434-51912	CLIP	1	SN:B10001--
4	07095-20318	CUSHION	1	SN:B10001--
5	04434-52512	CLIP	1	SN:B10001--
6	01010-81020	BOLT	5	SN:B10001--
7	01643-31032	WASHER	5	SN:B10001--
8	08192-24200	CONNECTOR	1	SN:B10001--
9	08191-00770	PLUG	4	SN:B10001--

Ref. E0202-04A0 Page 120090

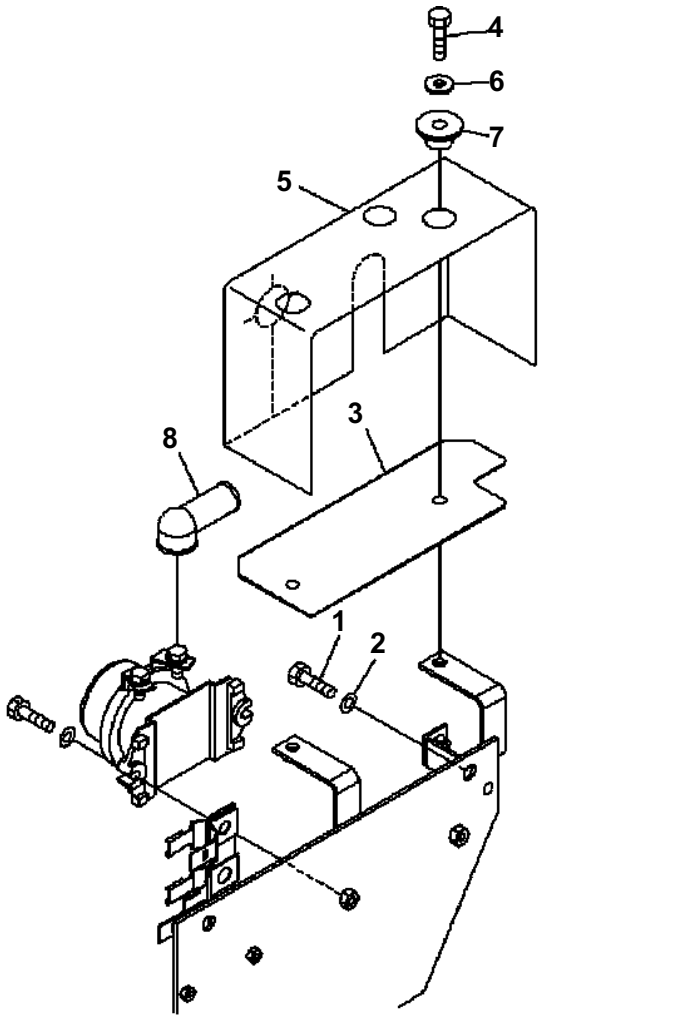

WA200-5 S/N B10001-UP

REAR HARNESS (SWITCH MOUNT PARTS)

Item	Part No.	Description	Qty	Options
1	01010-81025	BOLT	2	SN:B10001--
2	01643-31032	WASHER	2	SN:B10001--
3	418-06-31591	COVER	1	SN:B10001--
4	01010-80825	BOLT	2	SN:B10332--
	01010-80816	BOLT	2	SN:B10001--B10331
5	418-06-31790	SHEET	2	SN:B10332--
6	154-61-16570	WASHER	2	SN:B10332--
	01643-30823	WASHER	2	SN:B10001--B10331
7	203-54-55660	COLLAR	2	SN:B10332--
8	08038-06031	CAP	1	SN:B10001--

Ref. E0202-05A0 Page 120100

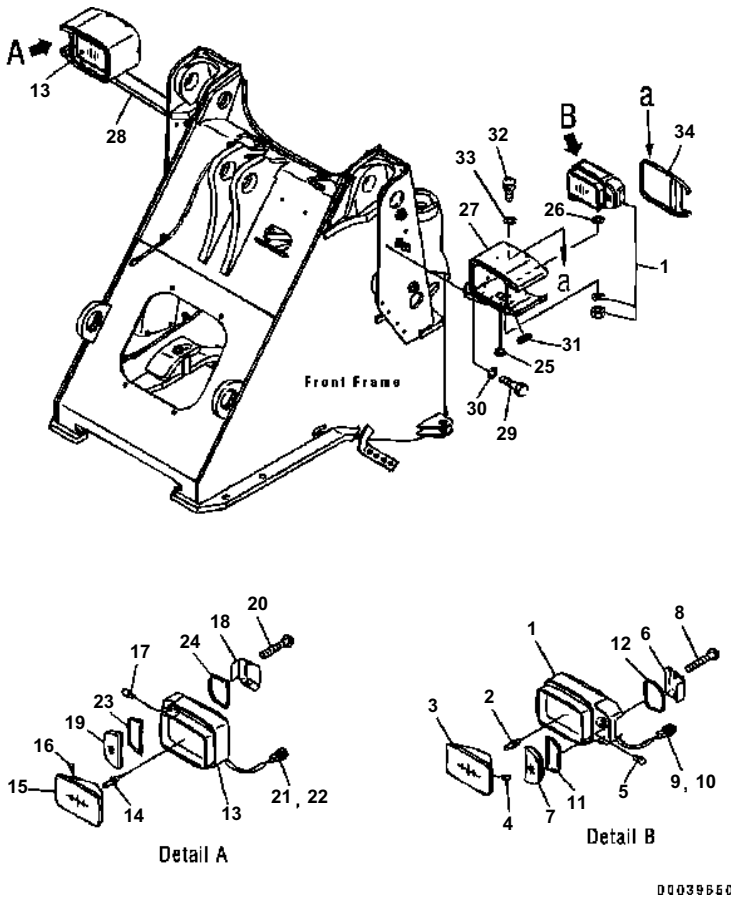

WA200-5 S/N B10001-UP

FRONT LIGHT

Item	Part No.	Description	Qty	Options
1	418-06-33212	LAMP {HEAD¤ LH}	1	SN:B10001--
2	424-06-23230	· BULB¤ 75/70W	1	SN:B10001--
3	418-06-33410	· LAMP	1	SN:B10001--
4	418-06-33420	· BULB¤ 24V	1	SN:B10001--
5	418-06-33430	· BULB¤ 24V	1	SN:B10001--
6	418-06-33441	· LENS	1	SN:B10001--
7	418-06-33451	· LENS	1	SN:B10001--
8	418-06-33460	· SCREW	1	SN:B10001--
9	08055-10612	· BODY	1	SN:B10001--
10	08055-10630	· HOLDER	1	SN:B10001--
11	418-06-33470	· GASKET	1	SN:B10001--
12	418-06-33480	· GASKET	1	SN:B10001--
13	418-06-33222	LAMP {HEAD¤ RH}	1	SN:B10001--
14	424-06-23230	· BULB¤ 75/70W	1	SN:B10001--
15	418-06-33410	· LAMP	1	SN:B10001--
16	418-06-33420	· BULB¤ 24V	1	SN:B10001--
17	418-06-33430	· BULB¤ 24V	1	SN:B10001--
18	418-06-33441	· LENS	1	SN:B10001--
19	418-06-33451	· LENS	1	SN:B10001--
20	418-06-33460	· SCREW	1	SN:B10001--
21	08055-10612	· BODY	1	SN:B10001--
22	08055-10630	· HOLDER	1	SN:B10001--
23	418-06-33470	· GASKET	1	SN:B10001--
24	418-06-33480	· GASKET	1	SN:B10001--
25	207-54-16860	GROMMET	2	SN:B10001--
26	209-09-11340	WASHER	2	SN:B10001--
27	418-06-33115	SUPPORT {LH}	1	SN:B10001--
28	418-06-33125	SUPPORT {RH}	1	SN:B10001--
29	01010-81025	BOLT	6	SN:B10001--
30	01643-31032	WASHER	6	SN:B10001--
31	09415-03614	CAP	2	SN:B10001--
32	01010-80612	BOLT	8	SN:B10032--
	□01023-10612	SCREW	8	SN:B10001--B10031
33	01643-30623	WASHER	8	SN:B10032--
34	418-06-33191	PLATE	2	SN:B10001--

Ref. E0300-01A0 Page 120110

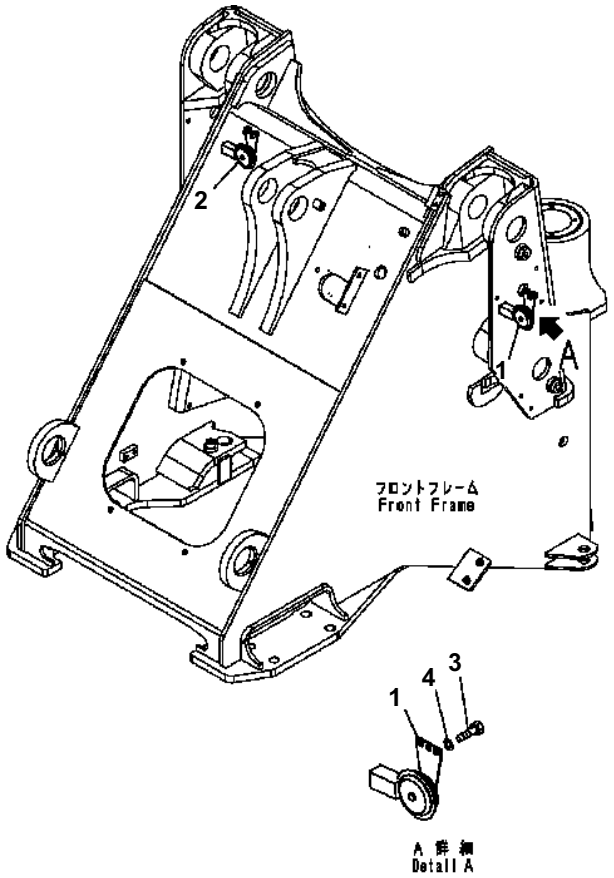

WA200-5 S/N B10001-UP

HORN

Item	Part No.	Description	Qty	Options
1	08160-72400	HORN	1	SN:B10001--
2	08160-72420	HORN	1	SN:B10001--
3	01010-80816	BOLT	4	SN:B10001--
4	01643-30823	WASHER	4	SN:B10001--

Ref. E0410-01A0 Page 120120

TRANSMISSION

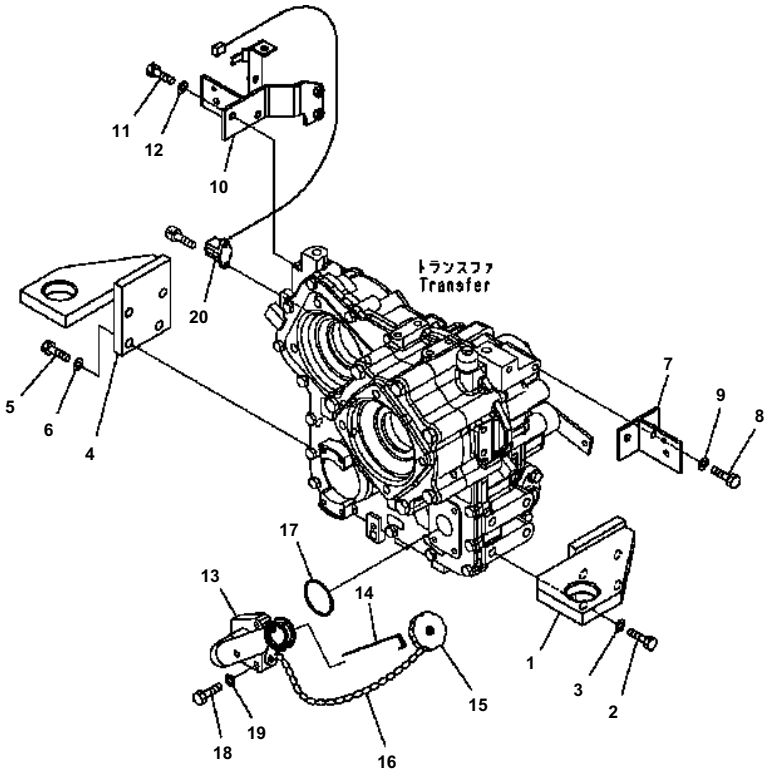

WA200-5 S/N B10001-UP

TRANSFER MOUNT

Item	Part No.	Description	Qty	Options
1	418-14-31113	BRACKET {L.H.}	1	SN:B10001--
2	01010-81650	BOLT	4	SN:B10001--
3	01643-31645	WASHER	4	SN:B10001--
4	418-14-31143	BRACKET {R.H.}	1	SN:B10001--
5	01010-81650	BOLT	4	SN:B10001--
6	01643-31645	WASHER	4	SN:B10001--
7	418-14-31152	BRACKET {REAR¤ L.H}	1	SN:B10320--
	418-14-31151	BRACKET {REAR¤ L.H.}	1	SN:B10001--B10319
8	01010-81230	BOLT	2	SN:B10001--
9	01643-31232	WASHER	2	SN:B10001--
10	418-14-31126	BRACKET {REAR¤ R.H.}	1	SN:B10320--
	418-14-31125	BRACKET {REAR¤ R.H.}	1	SN:B10001--B10319
11	01010-81230	BOLT	2	SN:B10001--
12	01643-31232	WASHER	2	SN:B10001--
13	417-17-34260	TUBE {FILLER}	1	SN:B10001--
14	418-18-32122	GAUGE	1	SN:B10001--
15	6136-21-7120	CAP ASS'Y	1	SN:B10001--
	6136-21-7180	· GASKET	1	SN:B10001--
16	6136-21-7190	CHAIN	1	SN:B10001--
17	07000-A2065	O-RING	1	SN:B10001--
18	01010-81045	BOLT	3	SN:B10001--
19	01643-31032	WASHER	3	SN:B10001--
20	418-18-31502	SENSOR	1	SN:B10001--

Ref. F2420-01A0 Page 150010

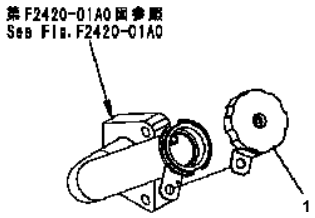

D0D25302

WA200-5 S/N B10001-UP

TRANSFER CAP

Item	Part No.	Description	Qty	Options
1	417-979-2110	CAP	1	SN:B10001--
	6136-21-7180	・ GASKET	1	SN:B10001--

Ref. F2420-02A3 Page 150020

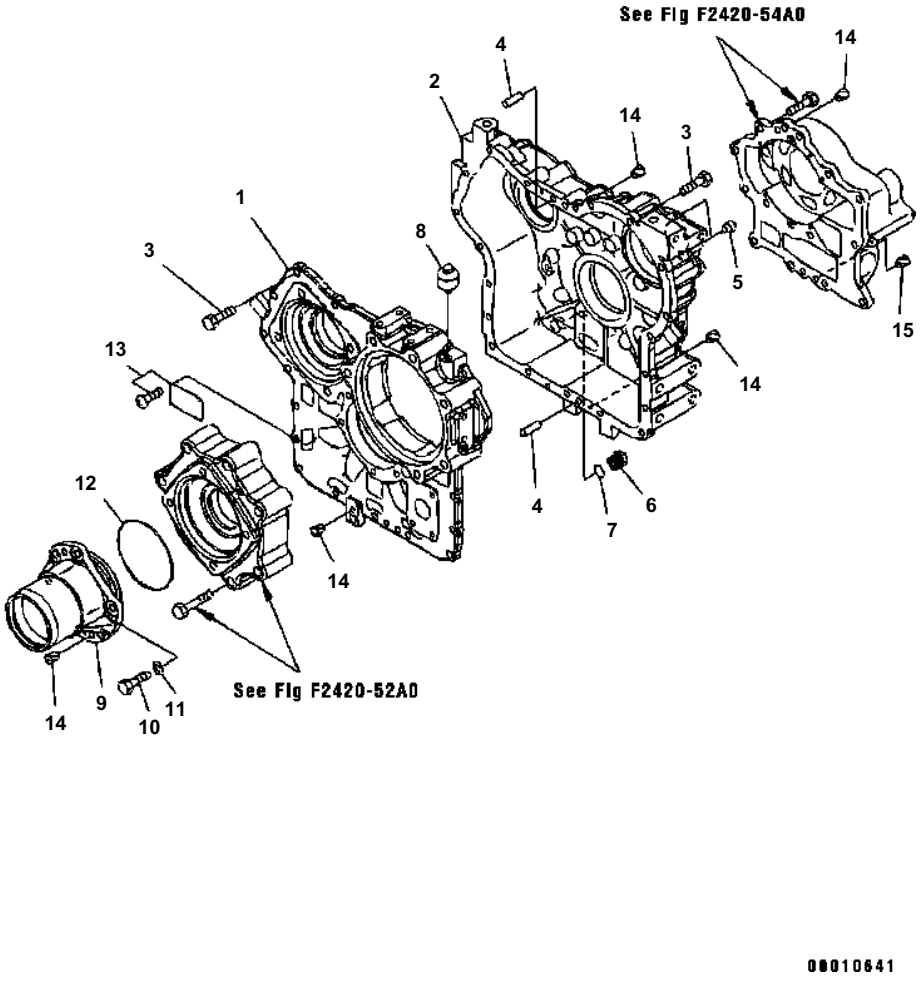

WA200-5 S/N B10001-UP

TRANSFER (1/4) (CLUTCH HOUSING)

Item	Part No.	Description	Qty	Options
	417-17-31004	TRANSFER ASS'Y	1	SN:B10320--
	417-17-31002	TRANSFER ASS'Y	1	SN:B10001--B10319
THESE ASSEMBLIES CONSIST OF ALL PARTS SHOWN IN FIGS.F2420-51A0 TO F2420-54A0.				
	417-17-31104	· CASE ASS'Y	1	SN:B10320--
	417-17-31102	· CASE ASS'Y	1	SN:B10001--B10319
1	417-17-31112	· · CASE {FRONT}	1	SN:B10001--
2	418-17-31122	· · CASE {REAR}	1	SN:B10001--
3	01010-81235	· BOLT	20	SN:B10001--
4	04020-01228	· PIN	2	SN:B10001--
5	07043-A0211	· PLUG	2	SN:B10001--
6	07044-12412	· PLUG	1	SN:B10001--
7	07002-12434	· O-RING	1	SN:B10001--
8	07030-00252	· BREATHER	1	SN:B10001--
9	417-17-31131	· CAGE	1	SN:B10001--
10	01010-81235	· BOLT	6	SN:B10001--
11	01643-31232	· WASHER	6	SN:B10001--
12	07000-75130	· O-RING	1	SN:B10001--
13	09608-05080	· PLATE¤ NAME	1	SN:B10001--
	04418-13060	· SCREW	4	SN:B10001--
14	07049-01215	· PLUG	9	SN:B10001--
15	07049-01620	· PLUG	1	SN:B10001--

Ref. F2420-51A0 Page 150030

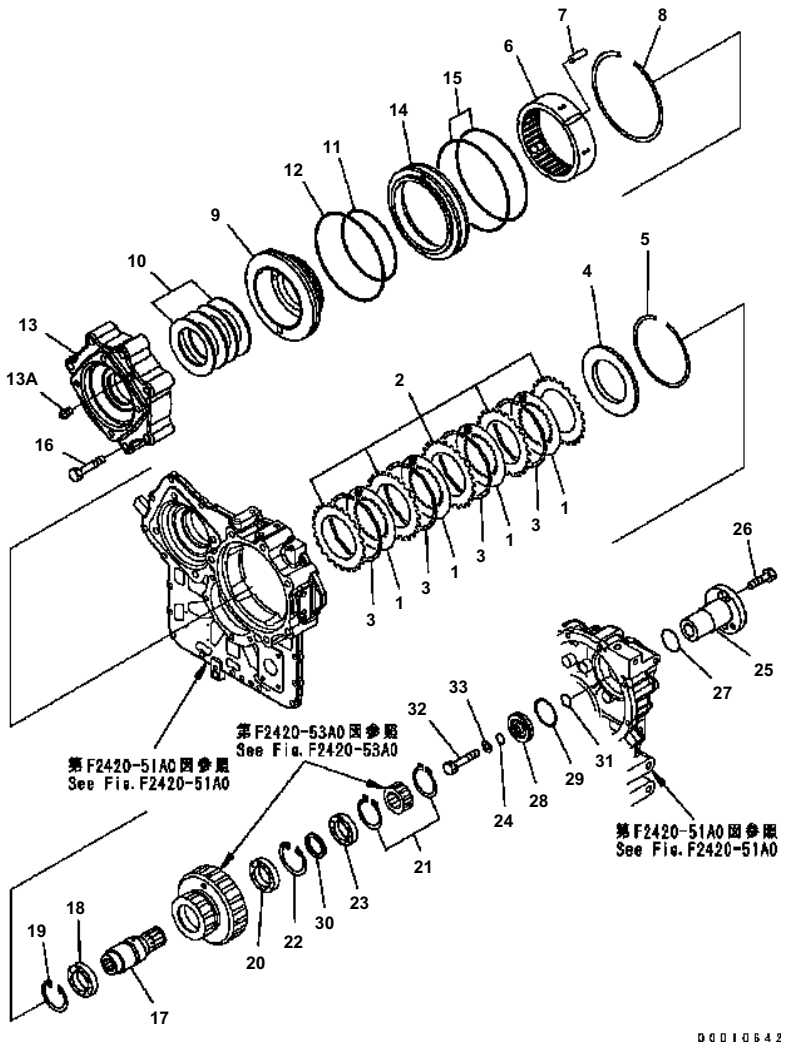

WA200-5 S/N B10001-UP

TRANSFER (2/4) (CLUTCH HOUSING)

Item	Part No.	Description	Qty	Options
	(417-17-31004)	TRANSFER ASS'Y	1	SN:B10320--
	(417-17-31002)	TRANSFER ASS'Y	1	SN:B10001--B10319
THESE ASSEMBLIES CONSIST OF ALL PARTS SHOWN IN FIGSF2420-51A0 TO F2420-54A0				
1	418-17-39710	· DISC	4	SN:B10001--
2	714-16-19730	· PLATE	5	SN:B10001--
3	56D-15-12710	· SPRING	4	SN:B10001--
4	714-12-12610	· PLATE	1	SN:B10001--
5	419-15-12140	· RING	1	SN:B10001--
6	417-17-32621	· HOUSING	1	SN:B10001--
7	04020-01228	· PIN	3	SN:B10001--
8	04071-00200	· RING	1	SN:B10001--
9	418-17-32713	· PISTON	1	SN:B10001--
10	417-17-32700	· SPRING ASS'Y	1	SN:B10001--
11	07000-A6165	· O-RING	1	SN:B10001--
12	07000-A6210	· O-RING	1	SN:B10001--
13	417-17-35140	· CAGE	1	SN:B10001--
14	418-17-31163	· SPACER	1	SN:B10001--
15	07000-A5220	· O-RING	2	SN:B10001--
16	01010-61695	· BOLT	6	SN:B10001--
17	418-17-32112	· SHAFT	1	SN:B10001--
18	06040-06010	· BEARING	1	SN:B10001--
19	04065-08025	· RING	1	SN:B10001--
20	06040-06010	· BEARING	1	SN:B10001--
21	04064-04518	· RING	2	SN:B10001--
22	04065-08025	· RING	1	SN:B10001--
23	06043-06009	· BEARING	1	SN:B10001--
24	07018-00251	· RING	1	SN:B10001--
25	418-17-32811	· SHAFT	1	SN:B10001--
26	01010-81235	· BOLT	3	SN:B10001--
27	07000-A2055	· O-RING	1	SN:B10001--
28	418-17-32821	· HOLDER	1	SN:B10001--
29	07018-00703	· RING	1	SN:B10001--
30	418-17-32561	· SPACER	1	SN:B10001--
31	07000-73025	· O-RING	1	SN:B10001--
32	01010-81275	· BOLT	1	SN:B10001--
33	01643-51232	· WASHER	1	SN:B10001--

Ref. F2420-52A0 Page 150040

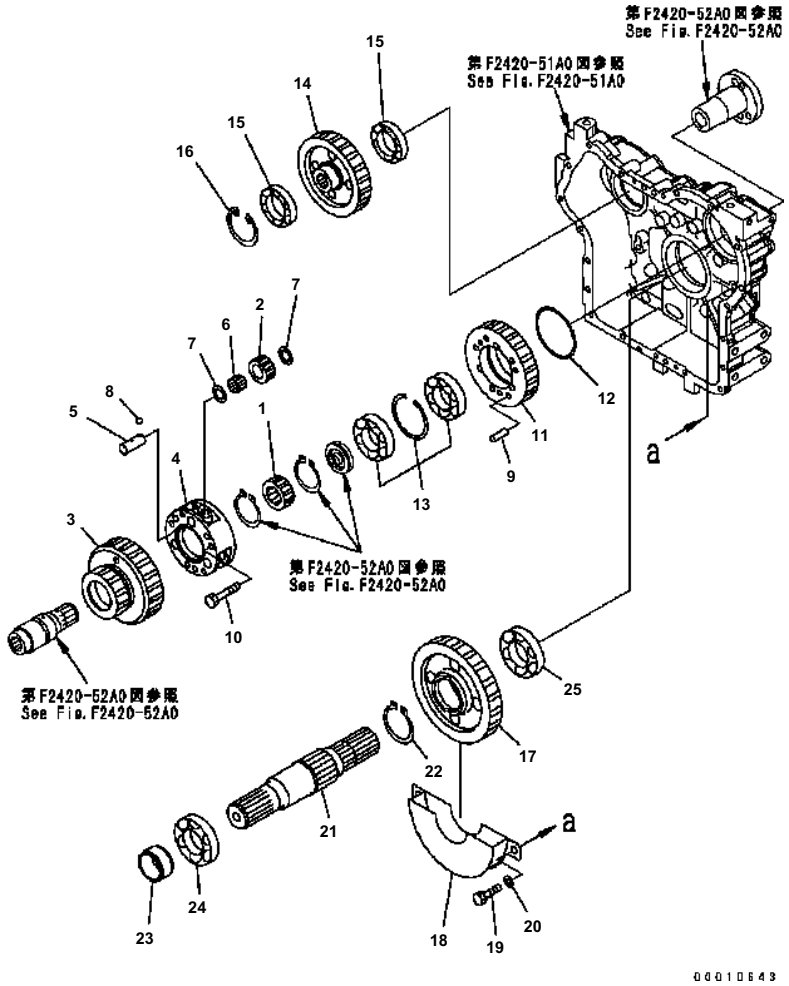

WA200-5 S/N B10001-UP

TRANSFER (3/4) (GEAR)

Item	Part No.	Description	Qty	Options
	(417-17-31004)	TRANSFER ASS'Y	1	SN:B10320--
	(417-17-31002)	TRANSFER ASS'Y	1	SN:B10001--B10319
THESE ASSEMBLIES CONSIST OF ALL PARTS SHOWN IN FIGSF2420-51A0 TO F2420-54A0				
1	418-17-32211	· GEAR	1	SN:B10001--
2	418-17-32411	· GEAR	3	SN:B10001--
3	418-17-32611	· GEAR {RING}	1	SN:B10001--
4	418-17-32312	· CARRIER	1	SN:B10001--
5	418-17-32511	· SHAFT	3	SN:B10001--
6	418-17-39311	· BEARING {NEEDLE}	3	SN:B10001--
7	418-17-32570	· THRUST WASHER	6	SN:B10001--
8	04260-00635	· BALL	3	SN:B10001--
9	04020-01228	· PIN	2	SN:B10001--
10	01252-31260	· BOLT	6	SN:B10001--
11	417-17-33212	· GEAR	1	SN:B10001--
12	14Y-22-13270	· RING	1	SN:B10001--
13	418-17-39321	· BEARING	1	SN:B10001--
14	417-17-33220	· GEAR	1	SN:B10001--
15	06040-06011	· BEARING	2	SN:B10001--
16	04065-09030	· RING {SNAP}	1	SN:B10001--
17	417-17-33231	· GEAR {OUTPUT}	1	SN:B10001--
18	417-17-33410	· BUFFLE	1	SN:B10001--
19	01010-81225	· BOLT	2	SN:B10320--
	01010-81225	· BOLT	1	SN:B10001--B10319
20	01643-31232	· WASHER	2	SN:B10320--
	01643-31232	· WASHER	1	SN:B10001--B10319
21	417-17-32120	· SHAFT	1	SN:B10001--
22	04064-07525	· RING	1	SN:B10001--
23	417-17-32132	· SPACER	1	SN:B10001--
24	418-17-39330	· BEARING	1	SN:B10001--
25	418-17-39340	· BEARING	1	SN:B10001--

Ref. F2420-53A0 Page 150050

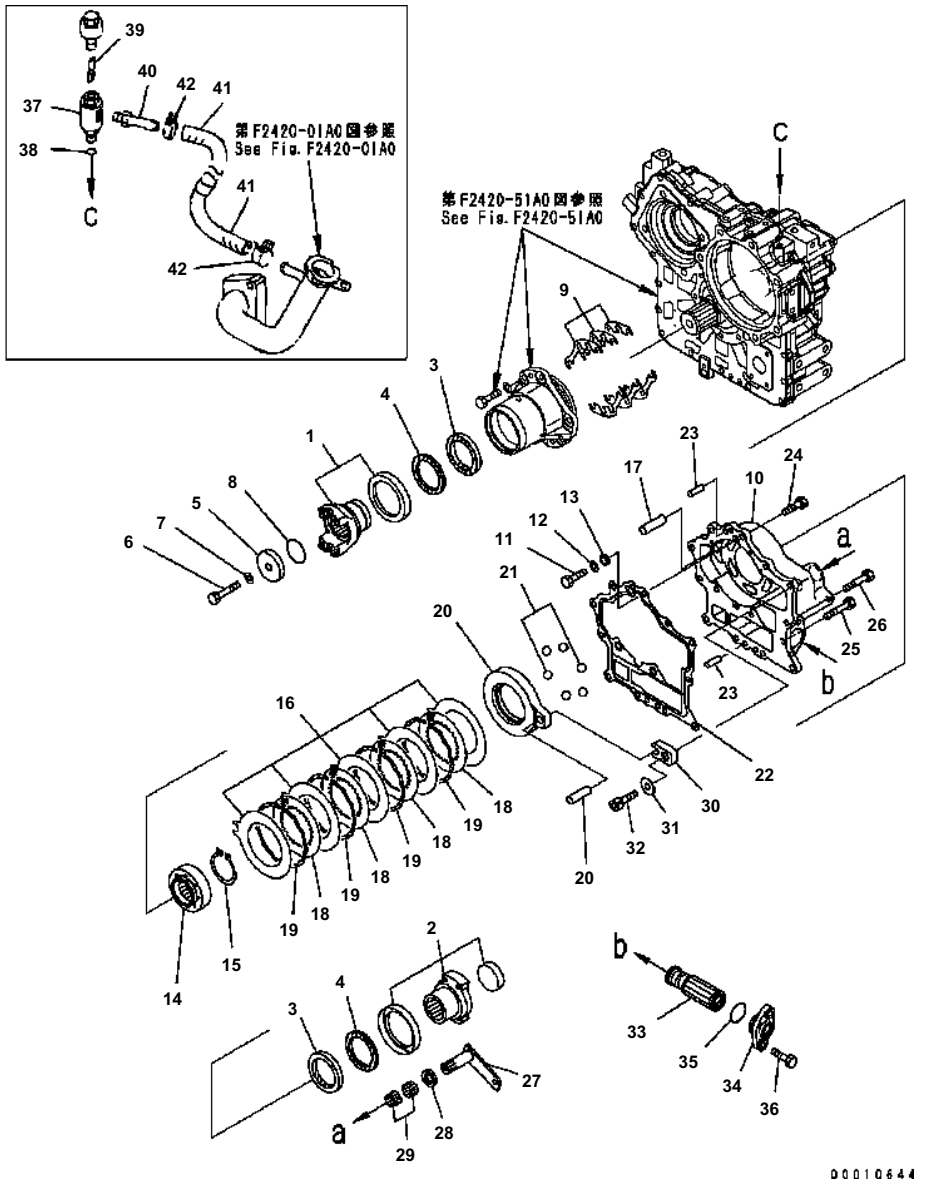

WA200-5 S/N B10001-UP

TRANSFER (4/4) (OUTPUT) (B10001-B10319)

Item	Part No.	Description	Qty	Options
	(417-17-31002)	TRANSFER ASS'Y	1	SN:B10001--B10319
THESE ASSEMBLIES CONSIST OF ALL PARTS SHOWN IN FIGSF2420-51A0 TO F2420-54A0				
1	417-17-33310	· COUPLING COMPLETE	1	SN:B10001--@
	(☆417-17-33510)	· · COUPLING	1	SN:B10001--@
	(☆418-17-33530)	· · COVER	1	SN:B10001--@
2	418-17-33320	· COUPLING COMPLETE	1	SN:B10001--@
	(☆418-17-33520)	· · COUPLING	1	SN:B10001--@
	(☆418-17-33541)	· · · COUPLING	1	SN:B10001--@
	(☆419-15-13591)	· · · COVER	1	SN:B10001--@
	(☆418-17-33530)	· · COVER	1	SN:B10001--@
3	07012-50075	· SEAL	2	SN:B10001--@
4	419-15-13660	· SEAL	2	SN:B10001--@
5	423-22-11240	· HOLDER	1	SN:B10001--@
6	01010-61680	· BOLT	1	SN:B10001--@
7	01643-31645	· WASHER	1	SN:B10001--@
8	07000-72055	· O-RING	1	SN:B10001--@
9	418-17-33420	· SHIM¤ 005MM	6	SN:B10001--@
	418-17-33430	· SHIM¤ 020MM	6	SN:B10001--@
	418-17-33440	· SHIM¤ 050MM	4	SN:B10001--@
10	418-17-38115	· HOUSING	1	SN:B10001--B10319
11	01010-80812	· BOLT	1	SN:B10001--B10319
12	01643-30823	· WASHER	1	SN:B10001--B10319
13	418-17-38160	· SPACER	2	SN:B10001--@
14	418-17-38210	· HUB	1	SN:B10001--@
15	04064-06020	· RING	1	SN:B10001--@
16	418-17-38221	· PLATE	5	SN:B10001--@
17	418-17-38170	· PIN	1	SN:B10001--@
18	418-17-39710	· DISC	4	SN:B10001--@
19	56D-15-12710	· SPRING	4	SN:B10001--@
20	418-17-38521	· PISTON ASS'Y	1	SN:B10001--B10319
21	714-11-18340	· BALL	6	SN:B10001--@
22	418-17-38134	· GASKET	1	SN:B10001--@
23	04020-01228	· PIN	2	SN:B10001--@
24	01010-81235	· BOLT	8	SN:B10001--@
25	01010-81285	· BOLT	4	SN:B10001--@
26	01011-81255	· BOLT	1	SN:B10001--@
27	418-17-38142	· LEVER	1	SN:B10001--@
28	714-11-19810	· SEAL	1	SN:B10001--@
29	06120-02520	· BEARING	2	SN:B10001--@

Ref. F2420-54A0 Page 150060

WA200-5 S/N B10001-UP

TRANSFER (4/4) (OUTPUT) (B10001-B10319)

Item	Part No.	Description	Qty	Options
30	418-17-38150	· LEVER	1	SN:B10001--@
31	714-09-16282	· WASHER	1	SN:B10001--@
32	01252-30816	· BOLT	1	SN:B10001--@
33	124-15-51740	· MAGNET ASS'Y	1	SN:B10001--@
34	418-17-38120	· COVER	1	SN:B10001--@
35	07000-73042	· O-RING	1	SN:B10001--@
36	01010-81235	· BOLT	2	SN:B10001--@
37	417-17-34290	· JOINT	1	SN:B10001--B10319
38	07002-61623	· O-RING	1	SN:B10001--B10319
39	124-15-41690	· PIN	1	SN:B10001--B10319
40	417-17-34281	· JOINT	1	SN:B10001--B10319
41	07260-21440	· HOSE	1	SN:B10001--B10319
42	09479-02400	· CLAMP	2	SN:B10001--B10319

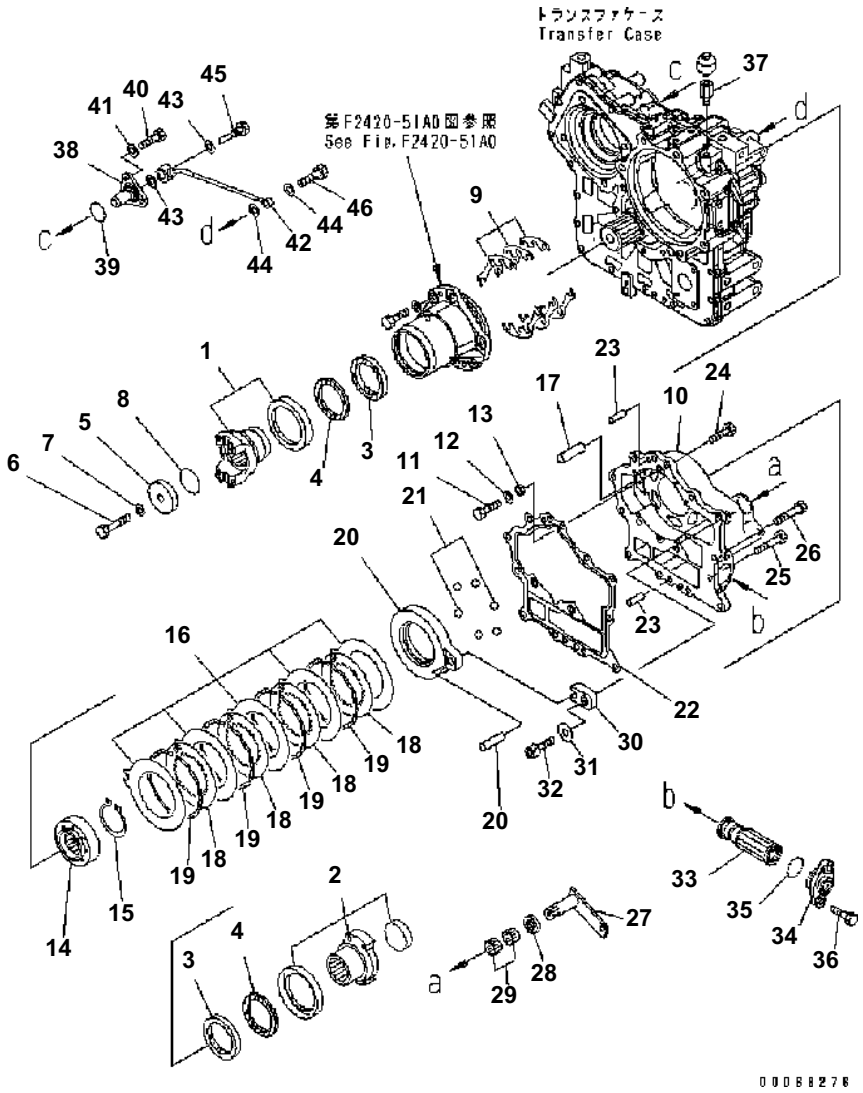

WA200-5 S/N B10001-UP

TRANSFER (4/4) (OUTPUT) (B10320)

Item	Part No.	Description	Qty	Options
	(417-17-31004)	TRANSFER ASS'Y	1	SN:B10320--
THESE ASSEMBLIES CONSIST OF ALL PARTS SHOWN IN FIGSF2420-51A0 TO F2420-54A0				
1	417-17-33310	・ COUPLING COMPLETE	1	SN:B10001--
	(☆417-17-33510)	・・ COUPLING	1	SN:B10001--
	(☆418-17-33530)	・・ COVER	1	SN:B10001--
2	418-17-33320	・ COUPLING COMPLETE	1	SN:B10001--
	(☆418-17-33520)	・・ COUPLING	1	SN:B10001--
	(☆418-17-33541)	・・・ COUPLING	1	SN:B10001--
	(☆419-15-13591)	・・・ COVER	1	SN:B10001--
	(☆418-17-33530)	・・ COVER	1	SN:B10001--
3	07012-50075	・ SEAL	2	SN:B10001--
4	419-15-13660	・ SEAL	2	SN:B10001--
5	423-22-11240	・ HOLDER	1	SN:B10001--
6	01010-61680	・ BOLT	1	SN:B10001--
7	01643-31645	・ WASHER	1	SN:B10001--
8	07000-72055	・ O-RING	1	SN:B10001--
9	418-17-33420	・ SHIM¤ 005MM	6	SN:B10001--
	418-17-33430	・ SHIM¤ 020MM	6	SN:B10001--
	418-17-33440	・ SHIM¤ 050MM	4	SN:B10001--
10	418-17-38116	・ HOUSING	1	SN:B10320--
11	01010-80816	・ BOLT	2	SN:B10320--
12	01643-30823	・ WASHER	2	SN:B10320--
13	418-17-38160	・ SPACER	2	SN:B10001--
14	418-17-38210	・ HUB	1	SN:B10001--
15	04064-06020	・ RING	1	SN:B10001--
16	418-17-38221	・ PLATE	5	SN:B10001--
17	418-17-38170	・ PIN	1	SN:B10001--
18	418-17-39710	・ DISC	4	SN:B10001--
19	56D-15-12710	・ SPRING	4	SN:B10001--
20	418-17-38522	・ PISTON ASS'Y	1	SN:B10320--
21	714-11-18340	・ BALL	6	SN:B10001--
22	418-17-38134	・ GASKET	1	SN:B10001--
23	04020-01228	・ PIN	2	SN:B10001--
24	01010-81235	・ BOLT	8	SN:B10001--
25	01010-81285	・ BOLT	4	SN:B10001--
26	01011-81255	・ BOLT	1	SN:B10001--
27	418-17-38142	・ LEVER	1	SN:B10001--
28	714-11-19810	・ SEAL	1	SN:B10001--
29	06120-02520	・ BEARING	2	SN:B10001--

Ref. F2420-54A0A Page 150061

WA200-5 S/N B10001-UP

TRANSFER (4/4) (OUTPUT) (B10320)

Item	Part No.	Description	Qty	Options
30	418-17-38150	· LEVER	1	SN:B10001--
31	714-09-16282	· WASHER	1	SN:B10001--
32	01252-30816	· BOLT	1	SN:B10001--
33	124-15-51740	· MAGNET ASS'Y	1	SN:B10001--
34	418-17-38120	· COVER	1	SN:B10001--
35	07000-73042	· O-RING	1	SN:B10001--
36	01010-81235	· BOLT	2	SN:B10001--
37	170-21-11190	· NIPPLE	1	SN:B10320--
38	418-17-34410	· FLANGE	1	SN:B10320--
39	07000-72040	· O-RING	1	SN:B10320--
40	01010-81030	· BOLT	3	SN:B10320--
41	01643-31032	· WASHER	3	SN:B10320--
42	418-17-34420	· TUBE	1	SN:B10320--
43	07005-02012	· GASKET	2	SN:B10320--
44	07005-01212	· GASKET	2	SN:B10320--
45	418-17-34440	· JOINT	1	SN:B10320--
46	07206-30812	· BOLT	1	SN:B10320--

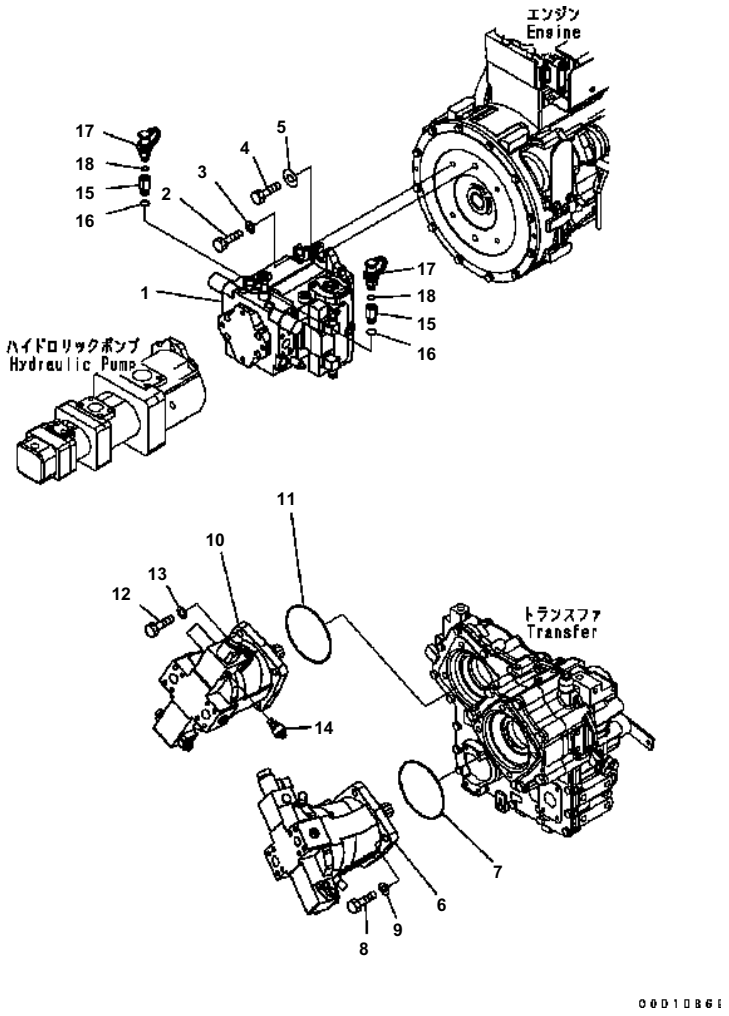

WA200-5 S/N B10001-UP

HST PUMP

Item	Part No.	Description	Qty	Options
1	(417-18-31101)	PUMP {VARIABLE}	1	SN:B10001--
2	01010-81240	BOLT	4	SN:B10001--
3	175-54-34170	WASHER	4	SN:B10001--
4	01010-81645	BOLT	2	SN:B10001--
5	418-18-31160	WASHER	2	SN:B10001--
6	(417-18-31201)	MOTOR {VARIABLE}	1	SN:B10001--
7	07000-A2145	O-RING	1	SN:B10001--
8	01010-81250	BOLT	4	SN:B10001--
9	01643-31232	WASHER	4	SN:B10001--
10	(417-18-31301)	MOTOR {VARIABLE}	1	SN:B10001--
11	07000-A2145	O-RING	1	SN:B10001--
12	01010-81250	BOLT	4	SN:B10001--
13	01643-31232	WASHER	4	SN:B10001--
14	418-06-36210	SENSOR	1	SN:B10001--
	07000-12011	・ O-RING	1	SN:B10001--
15	419-62-31710	JOINT	2	SN:B10001--
16	07000-12011	O-RING	2	SN:B10001--
17	799-101-5220	NIPPLE	2	SN:B10001--
18	07002-11023	O-RING	2	SN:B10001--

Ref. F2430-01A0 Page 150070

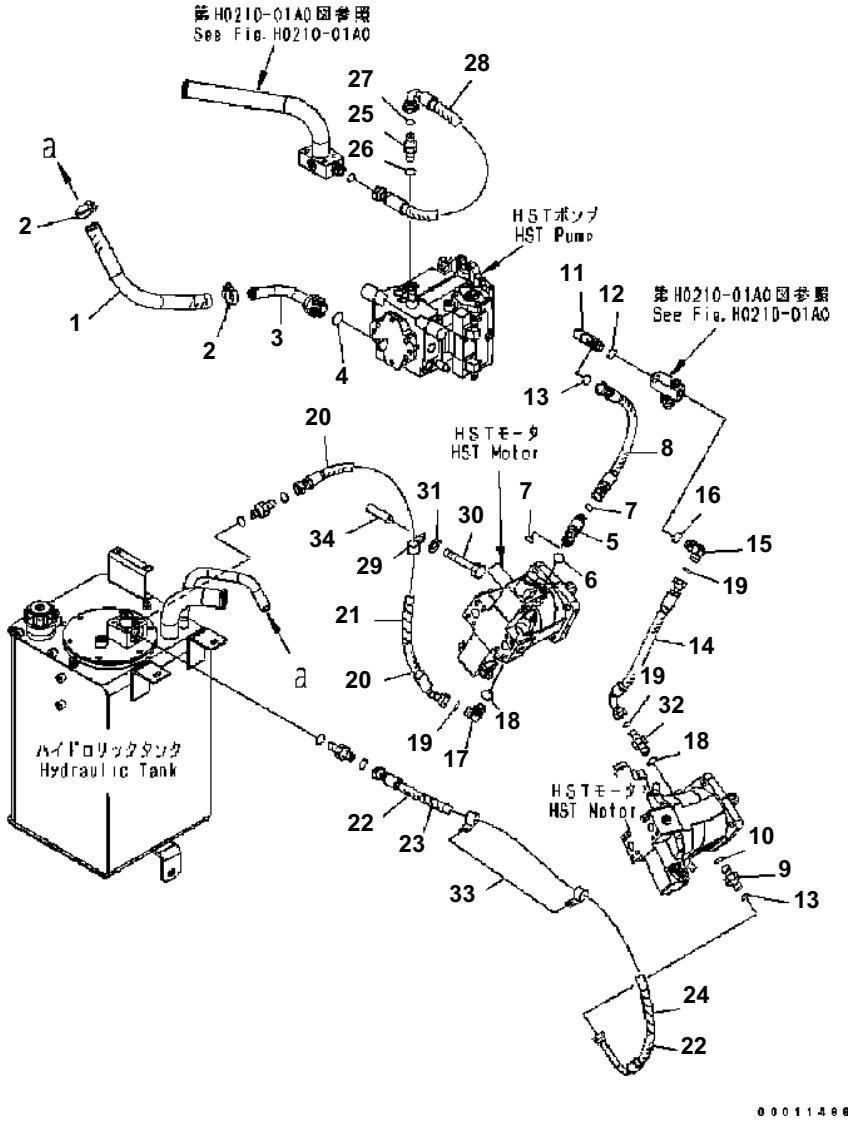

WA200-5 S/N B10001-UP

HST OIL LINE (CHARGE LINE)

Item	Part No.	Description	Qty	Options
1	07260-02650	HOSE	1	SN:B10001--@
2	07289-00045	CLAMP	2	SN:B10001--@
3	418-18-32311	ELBOW	1	SN:B10001--@
4	07000-13038	O-RING	1	SN:B10001--@
5	418-18-32321	TEE	1	SN:B10001--@
6	07000-12018	O-RING	1	SN:B10001--@
7	02896-11015	O-RING	2	SN:B10001--@
8	418-18-32361	HOSE	1	SN:B10001--@
9	417-18-32190	NIPPLE	1	SN:B10001--@
10	07000-12018	O-RING	1	SN:B10001--@
11	02782-10520	ELBOW	1	SN:B10001--@
12	07002-12434	O-RING	1	SN:B10001--B10235
13	02896-11015	O-RING	2	SN:B10001--@
14	417-18-32220	HOSE ASS'Y	1	SN:B10001--@
15	02782-10518	ELBOW	1	SN:B10001--@
16	07002-12034	O-RING	1	SN:B10001--@
17	418-18-32342	ELBOW	1	SN:B10001--@
18	07000-12018	O-RING	2	SN:B10001--@
19	02896-11015	O-RING	3	SN:B10001--@
20	417-18-32270	HOSE ASS'Y	1	SN:B10001--@
21	08210-01803	・ SPIRAL TUBE	1	SN:B10001--@
22	418-18-32264	HOSE ASS'Y	1	SN:B10001--@
23	08210-01802	・ SPIRAL TUBE	1	SN:B10001--@
24	08210-01803	・ SPIRAL TUBE	1	SN:B10001--@
25	418-18-32350	ELBOW	1	SN:B10001--B10235
26	07000-13024	O-RING	1	SN:B10001--@
27	02896-11018	O-RING	1	SN:B10001--B10235
28	418-18-32381	HOSE	1	SN:B10001--B10235
29	04434-52310	CLIP	1	SN:B10001--@
30	01011-81005	BOLT	1	SN:B10001--@
31	01643-31032	WASHER	1	SN:B10001--@
32	417-18-32190	NIPPLE	1	SN:B10001--@
33	04434-52310	CLIP	2	SN:B10001--@
34	6150-71-7130	COLLAR	1	SN:B10001--@

Ref. F2760-01A0 Page 150080

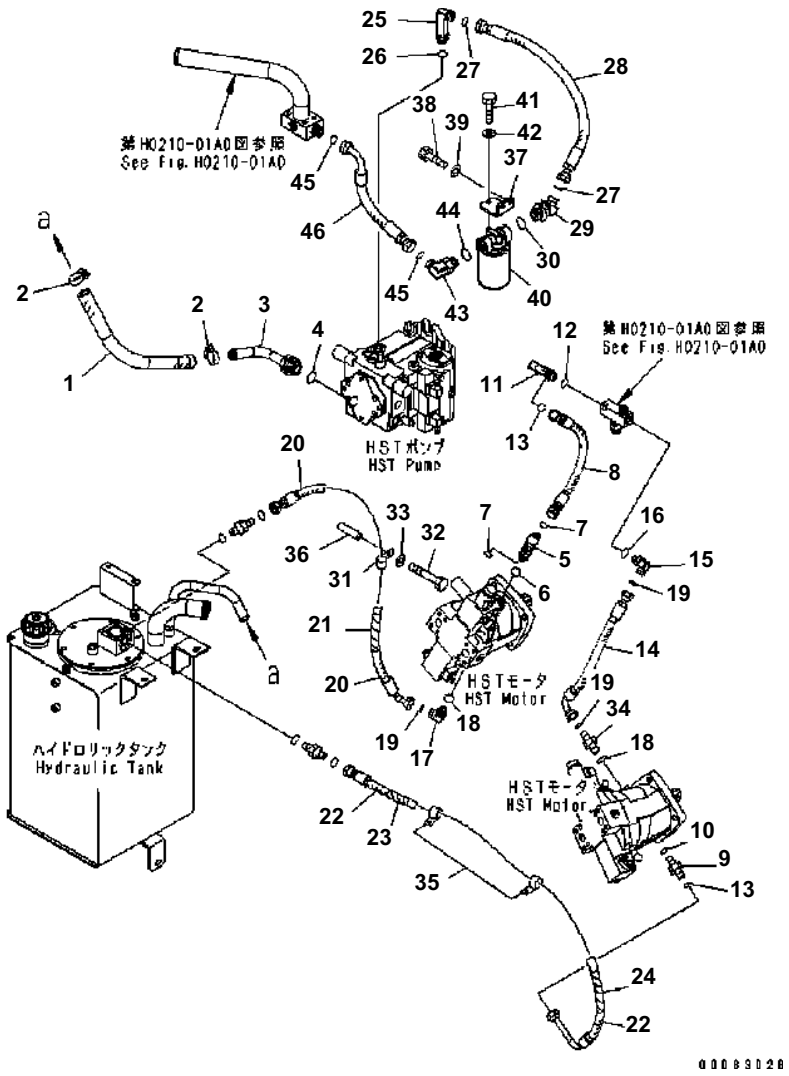

WA200-5 S/N B10001-UP

HST OIL LINE (CHARGE LINE)

Item	Part No.	Description	Qty	Options
1	07260-02650	HOSE	1	SN:B10001--
2	07289-00045	CLAMP	2	SN:B10001--
3	418-18-32311	ELBOW	1	SN:B10001--
4	07000-13038	O-RING	1	SN:B10001--
5	418-18-32321	TEE	1	SN:B10001--
6	07000-12018	O-RING	1	SN:B10001--
7	02896-11015	O-RING	2	SN:B10001--
8	418-18-32361	HOSE	1	SN:B10001--
9	417-18-32190	NIPPLE	1	SN:B10001--
10	07000-12018	O-RING	1	SN:B10001--
11	02782-10520	ELBOW	1	SN:B10001--
12	07002-12034	O-RING	1	SN:B10001--
13	02896-11015	O-RING	2	SN:B10001--
14	417-18-32220	HOSE ASS'Y	1	SN:B10001--
15	02782-10518	ELBOW	1	SN:B10001--
16	07002-12034	O-RING	1	SN:B10001--
17	418-18-32342	ELBOW	1	SN:B10001--
18	07000-12018	O-RING	2	SN:B10001--
19	02896-11015	O-RING	3	SN:B10001--
20	417-18-32270	HOSE ASS'Y	1	SN:B10001--
21	08210-01803	・ SPIRAL TUBE	1	SN:B10001--
22	418-18-32264	HOSE ASS'Y	1	SN:B10001--
23	08210-01802	・ SPIRAL TUBE	1	SN:B10001--
24	08210-01803	・ SPIRAL TUBE	1	SN:B10001--
25	417-18-32330	ELBOW	1	SN:B10236--
26	07000-13024	O-RING	1	SN:B10001--
27	02896-11018	O-RING	2	SN:B10236--
28	02762-006A6	HOSE	1	SN:B10236--
29	416-62-33470	ELBOW	1	SN:B10236--
30	07002-13334	O-RING	1	SN:B10236--
31	04434-52310	CLIP	1	SN:B10001--
32	01011-81005	BOLT	1	SN:B10001--
33	01643-31032	WASHER	1	SN:B10001--
34	417-18-32190	NIPPLE	1	SN:B10001--
35	04434-52310	CLIP	2	SN:B10001--
36	6150-71-7130	COLLAR	1	SN:B10001--
37	417-18-34120	PLATE	1	SN:B10236--
38	01010-81020	BOLT	2	SN:B10236--
39	01643-31032	WASHER	2	SN:B10236--
40	417-18-34110	FILTER ASS'Y	1	SN:B10236--

Ref. F2760-01A1 Page 150081

WA200-5 S/N B10001-UP

HST OIL LINE (CHARGE LINE)

Item	Part No.	Description	Qty	Options
	417-18-34130	· CARTRIDGE	1	SN:B10236--
41	01010-81020	BOLT	2	SN:B10236--
42	01643-31032	WASHER	2	SN:B10236--
43	02782-10632	ELBOW	1	SN:B10236--
44	07002-13334	O-RING	1	SN:B10236--
45	02896-11018	O-RING	2	SN:B10236--
46	417-18-32390	HOSE	1	SN:B10236--

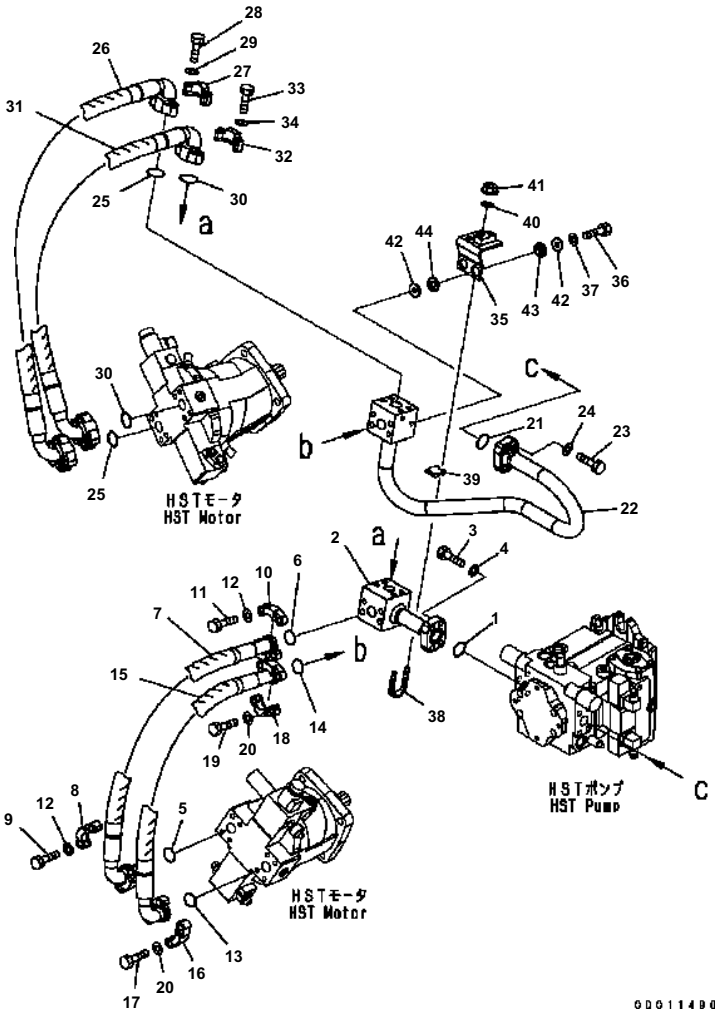

WA200-5 S/N B10001-UP

HST OIL LINE (MAIN LINE)

Item	Part No.	Description	Qty	Options
1	07000-13035	O-RING	1	SN:B10001--
2	418-18-32160	TUBE	1	SN:B10001--
3	07372-21240	BOLT	4	SN:B10001--
4	01643-51232	WASHER	4	SN:B10001--
5	415-18-21310	O-RING	1	SN:B10001--
6	07000-13032	O-RING	1	SN:B10001--
7	417-18-32111	HOSE	1	SN:B10001--
8	415-18-11230	FLANGE	2	SN:B10001--
9	07372-21245	BOLT	4	SN:B10001--
	20K-970-1150	BOLT {(FOR EMERGENCY STEERING)}	4	SN:B10001--
10	209-62-64232	FLANGE	2	SN:B10001--
11	07372-21240	BOLT	4	SN:B10001--
12	01643-51232	WASHER	8	SN:B10001--
13	415-18-21310	O-RING	1	SN:B10001--
14	07000-13032	O-RING	1	SN:B10001--
15	417-18-32121	HOSE	1	SN:B10001--
16	415-18-11230	FLANGE	2	SN:B10001--
17	07372-21245	BOLT	4	SN:B10001--
18	209-62-64232	FLANGE	2	SN:B10001--
19	07372-21240	BOLT	4	SN:B10001--
20	01643-51232	WASHER	8	SN:B10001--
21	07000-13035	O-RING	1	SN:B10001--
22	417-18-32291	TUBE	1	SN:B10001--
23	07372-21240	BOLT	4	SN:B10001--
24	01643-51232	WASHER	4	SN:B10001--
25	415-18-21310	O-RING	2	SN:B10001--
26	417-18-32130	HOSE	1	SN:B10001--
27	415-18-11230	FLANGE	4	SN:B10001--
28	07372-21245	BOLT	8	SN:B10001--
29	01643-51232	WASHER	8	SN:B10001--
30	415-18-21310	O-RING	2	SN:B10001--
31	417-18-32140	HOSE	1	SN:B10001--
32	415-18-11230	FLANGE	4	SN:B10001--
33	07372-21245	BOLT	8	SN:B10001--
34	01643-51232	WASHER	8	SN:B10001--
35	417-18-32320	PLATE	1	SN:B10001--
36	01010-81035	BOLT	2	SN:B10001--
37	01643-31032	WASHER	2	SN:B10001--
38	07283-33450	CLIP	1	SN:B10001--
39	07283-53444	SEAT	1	SN:B10001--

Ref. F2760-02A0 Page 150090

WA200-5 S/N B10001-UP

HST OIL LINE (MAIN LINE)

Item	Part No.	Description	Qty	Options
40	01643-31032	WASHER	2	SN:B10001--
41	01597-01009	NUT	2	SN:B10001--
42	144-854-1890	WASHER	4	SN:B10001--
43	421-62-18550	CUSHION	2	SN:B10001--
44	421-62-23710	CUSHION	2	SN:B10001--

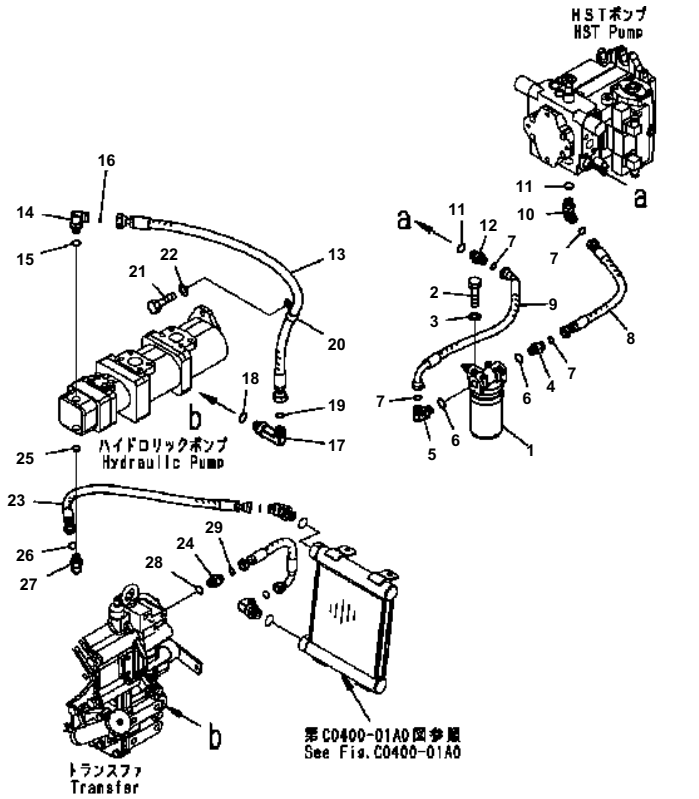

WA200-5 S/N B10001-UP

HST OIL LINE (FILTER AND TRANSFER LINE)

Item	Part No.	Description	Qty	Options
1	418-18-34110	FILTER ASS'Y	1	SN:B10001--
	418-18-34160	・ CARTRIDGE	1	SN:B10001--
2	01010-80825	BOLT	4	SN:B10001--
3	01643-30823	WASHER	4	SN:B10001--
4	02781-00422	UNION	1	SN:B10001--
5	02782-10422	ELBOW	1	SN:B10001--
6	07002-12034	O-RING	2	SN:B10001--
7	02896-11012	O-RING	4	SN:B10001--
8	418-18-32371	HOSE ASS'Y	1	SN:B10001--
9	417-18-31160	HOSE	1	SN:B10001--
10	418-62-35111	ELBOW	1	SN:B10001--
11	07000-12018	O-RING	2	SN:B10001--
12	417-18-31120	NIPPLE	1	SN:B10001--
13	02762-00510	HOSE	1	SN:B10001--
14	02782-10516	ELBOW	1	SN:B10001--
15	07002-22034	O-RING	1	SN:B10001--
16	02896-21015	O-RING	1	SN:B10001--
17	02782-10524	ELBOW	1	SN:B10001--
18	07002-22434	O-RING	1	SN:B10001--
19	02896-21015	O-RING	1	SN:B10001--
20	04434-52312	CLIP	1	SN:B10001--
21	01010-81225	BOLT	1	SN:B10001--
22	01643-31232	WASHER	1	SN:B10001--
23	417-14-31231	HOSE	1	SN:B10001--
24	02781-00422	UNION	1	SN:B10001--
25	07002-21823	O-RING	1	SN:B10001--
26	02896-21012	O-RING	1	SN:B10001--
27	02782-10420	ELBOW	1	SN:B10001--
28	07002-12034	O-RING	1	SN:B10001--
29	02896-21012	O-RING	1	SN:B10001--

Ref. F2760-03A0 Page 150100

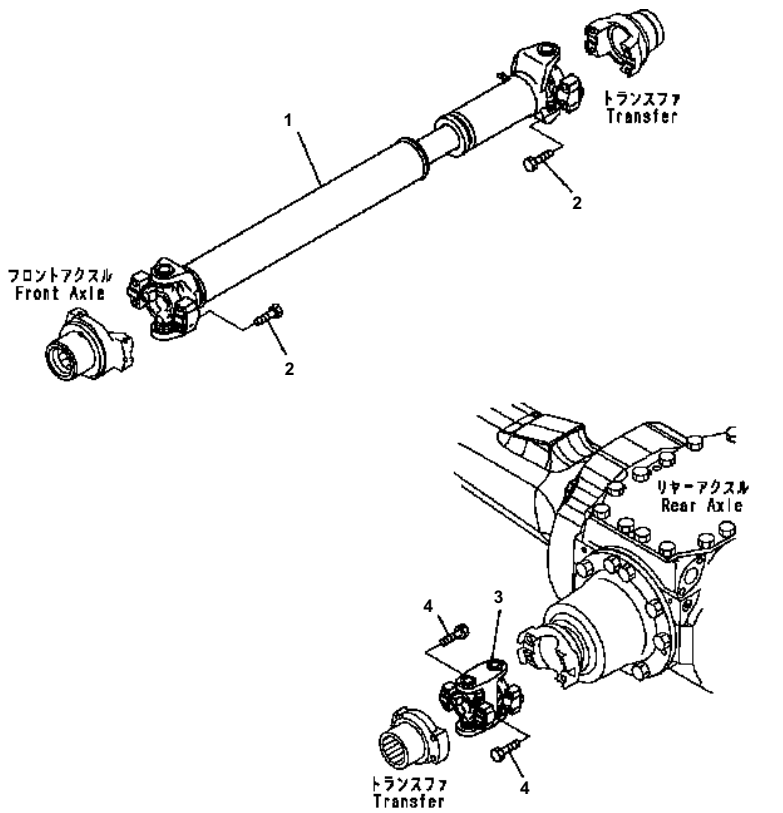

WA200-5 S/N B10001-UP

DRIVE SHAFT

Item	Part No.	Description	Qty	Options
1	418-20-32150	DRIVE SHAFT ASS'Y	1	SN:B10001--
2	01050-61045	BOLT	8	SN:B10001--
3	418-20-34150	DRIVE SHAFT ASS'Y	1	SN:B10001--
4	01050-61045	BOLT	8	SN:B10001--

Ref. F4200-01A0 Page 150110

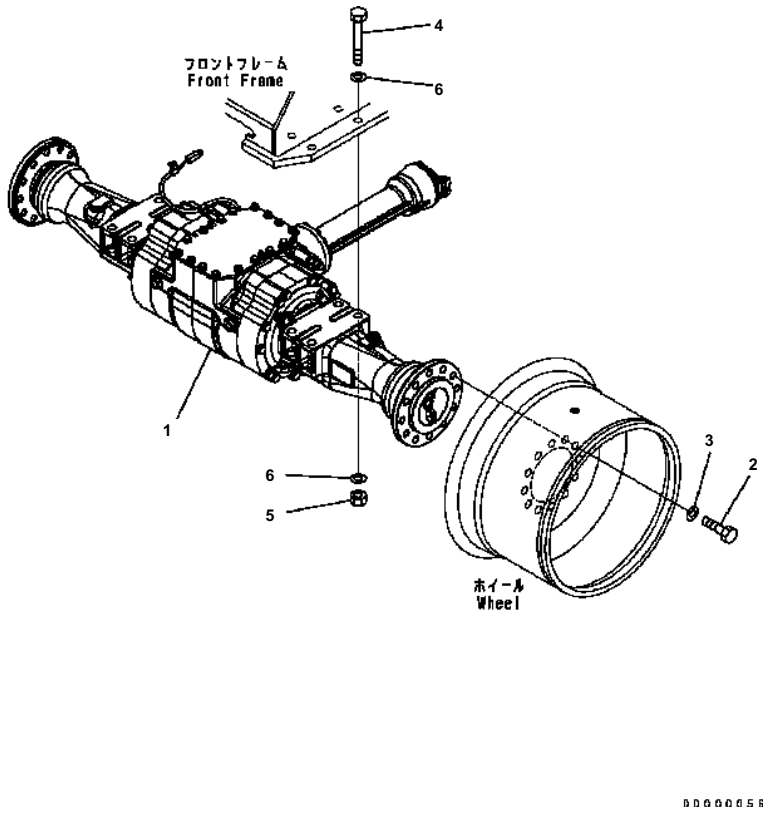

WA200-5 S/N B10001-UP

FRONT AXLE MOUNTING

Item	Part No.	Description	Qty	Options
1	418-22-30100	AXLE ASS'Y {FRONT}	1	SN:B10001--
2	419-22-12870	BOLT	24	SN:B10001--
3	01643-32460	WASHER	24	SN:B10001--
4	01011-82475	BOLT	8	SN:B10001--
5	01580-02419	NUT	8	SN:B10001--
6	01643-32460	WASHER	16	SN:B10001--

Ref. F4400-01A0 Page 150120

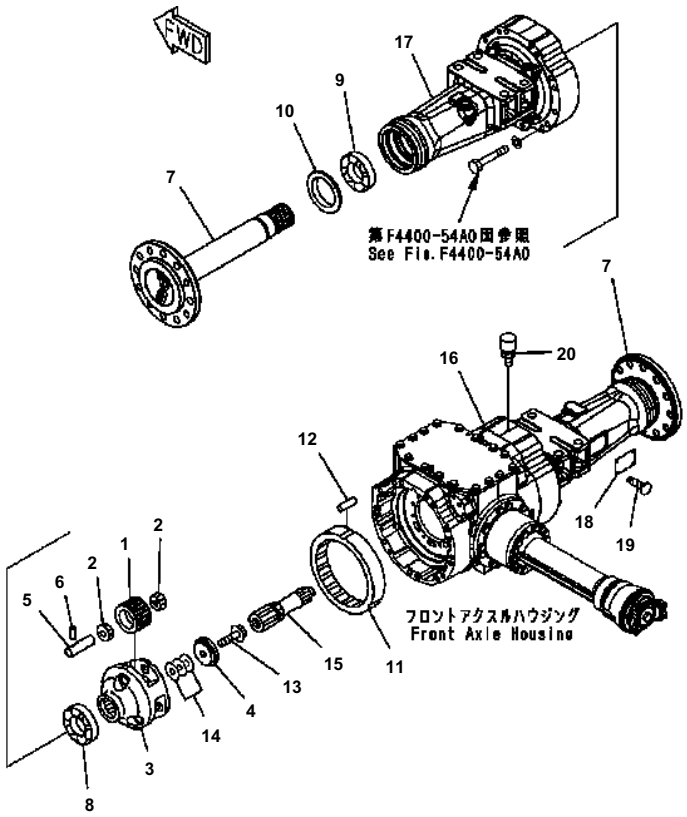

WA200-5 S/N B10001-UP

FRONT AXLE (FINAL DRIVE AND HOUSING)

Item	Part No.	Description	Qty	Options
	(418-22-30100)	AXLE ASS'Y {FRONT}	1	SN:B10001--
THESE ASSEMBLIES CONSIST OF ALL PARTS SHOWN IN FIGSF4400-51A0 TO F4400-54A0				
1	418-22-32531	· GEAR	6	SN:B10001--
2	417-22-22810	· BEARING {CONE}	12	SN:B10001--
3	418-22-32611	· CARRIER	2	SN:B10001--
4	418-22-32810	· HOLDER	2	SN:B10001--
5	419-22-12510	· SHAFT	6	SN:B10001--
6	419-22-12570	· PIN	6	SN:B10001--
7	418-23-32960	· SHAFT	2	SN:B10001--
8	418-22-12840	· BEARING	2	SN:B10001--
9	418-22-12850	· BEARING	2	SN:B10001--
10	418-22-12460	· SEAL	2	SN:B10001--
11	418-22-32541	· GEAR	2	SN:B10001--
12	417-22-12580	· PIN	6	SN:B10001--
13	01438-02000	· BOLT	2	SN:B10001--
14	418-22-21460	· SHIM¤ 005MM	4	SN:B10001--
	418-22-21470	· SHIM¤ 02MM	4	SN:B10001--
	418-22-21480	· SHIM¤ 05MM	4	SN:B10001--
15	418-22-32421	· SHAFT	2	SN:B10001--
16	418-22-33710	· HOUSING {RH}	1	SN:B10001--
17	418-22-33720	· HOUSING {LH}	1	SN:B10001--
18	815-02-10110	· PLATE¤ NAME	1	SN:B10001--
19	04418-13060	· SCREW	4	SN:B10001--
20	07030-01030	· BREATHER	1	SN:B10001--

Ref. F4400-51A0 Page 150130

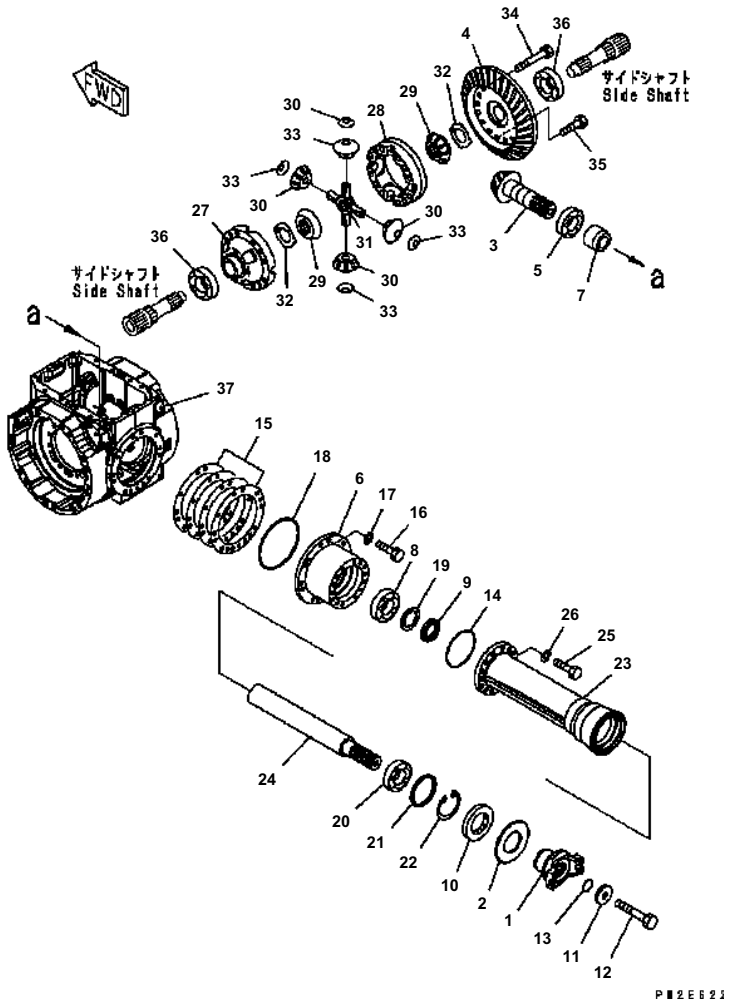

WA200-5 S/N B10001-UP

FRONT AXLE (DIFFERENTIAL)

Item	Part No.	Description	Qty	Options
	(418-22-30100)	AXLE ASS'Y	1	SN:B10001--
THIS ASSEMBLY CONSISTS OF ALL PARTS SHOWN IN FIGS.F4400-51A0 TO F4400-54A0.				
1	418-23-31231	・ COUPLING	1	SN:B10001--
2	418-22-21310	・ PROTECTOR	1	SN:B10001--
	418-22-31201	・ PINION	1	SN:B10001--
3	418-22-31211	・・ PINION	1	SN:B10001--
4	418-22-31220	・・ GEAR {BEVEL}	1	SN:B10001--
5	418-22-11810	・ BEARING	1	SN:B10001--
6	418-22-31141	・ CAGE	1	SN:B10001--
7	418-22-31861	・ SPACER	1	SN:B10001--
8	419-22-11820	・ BEARING	1	SN:B10001--
9	418-22-31990	・ NUT	1	SN:B10001--
10	418-22-21330	・ SEAL {OIL}	1	SN:B10001--
11	417-15-13770	・ HOLDER	1	SN:B10001--
12	01011-61615	・ BOLT	1	SN:B10001--
13	07000-13042	・ O-RING	1	SN:B10001--
14	07000-15115	・ O-RING	1	SN:B10001--
15	417-22-11361	・ SHIM¤ 0.05MM	2	SN:B10001--
	417-22-11371	・ SHIM¤ 0.2MM	2	SN:B10001--
	417-22-11381	・ SHIM¤ 0.3MM	2	SN:B10001--
	417-22-11391	・ SHIM¤ 0.8MM	1	SN:B10001--
16	01010-61235	・ BOLT	13	SN:B10001--
17	01643-31232	・ WASHER	13	SN:B10001--
18	07000-15160	・ O-RING	1	SN:B10001--
19	418-22-31980	・ HOLDER	1	SN:B10001--
20	06301-06310	・ BEARING	1	SN:B10001--
21	418-22-31970	・ RING	1	SN:B10001--
22	04065-01104	・ RING {SNAP}	1	SN:B10001--
23	418-22-31851	・ CAGE	1	SN:B10001--
24	418-22-31921	・ SHAFT	1	SN:B10001--
25	01010-61240	・ BOLT	14	SN:B10001--
26	01643-31232	・ WASHER	14	SN:B10001--
	418-22-31502	・ CASE ASS'Y	1	SN:B10001--
27	418-22-31512	・・ CASE	1	SN:B10001--
28	418-22-31521	・・ CASE	1	SN:B10001--
29	418-22-31430	・ GEAR	2	SN:B10001--
30	419-22-11421	・ PINION	4	SN:B10001--
31	418-22-31410	・ SPIDER	1	SN:B10001--
32	418-22-31460	・ WASHER	2	SN:B10001--

Ref. F4400-52A0 Page 150140

WA200-5 S/N B10001-UP

FRONT AXLE (DIFFERENTIAL)

Item	Part No.	Description	Qty	Options
33	418-22-31550	· WASHER	4	SN:B10001--
34	01010-61695	· BOLT	12	SN:B10001--
35	01010-61645	· BOLT	4	SN:B10001--
36	417-22-12840	· BEARING	2	SN:B10001--
37	418-22-33121	· HOUSING	1	SN:B10001--

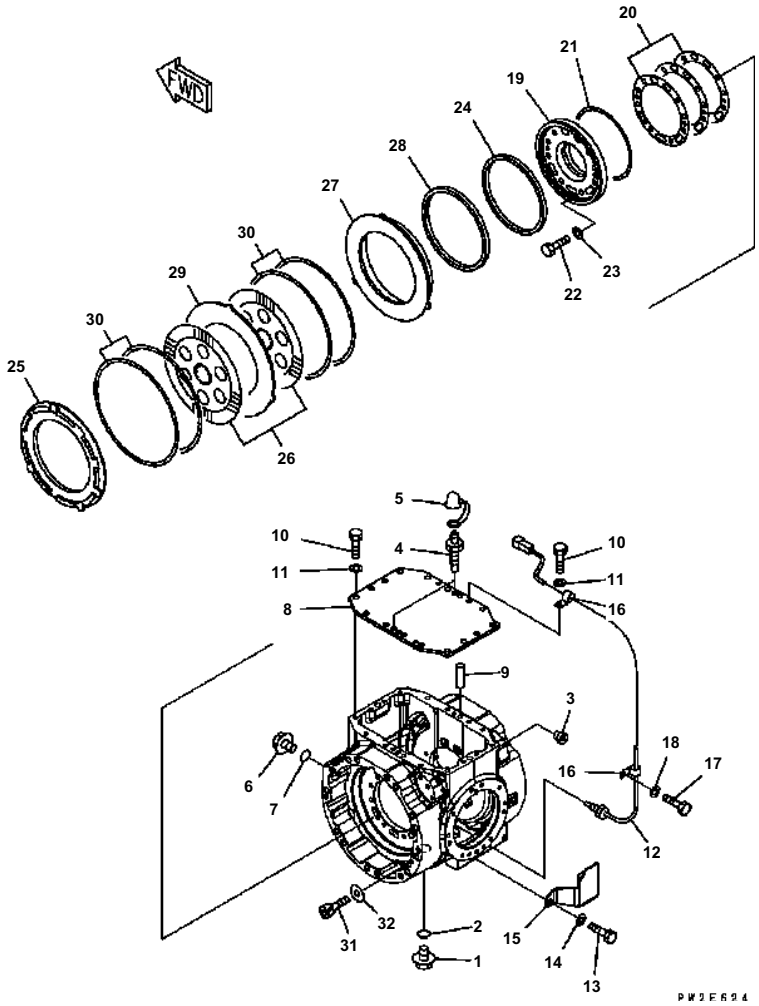

WA200-5 S/N B10001-UP

FRONT AXLE (COVER AND BRAKE)

Item	Part No.	Description	Qty	Options
	(418-22-30100)	AXLE ASS'Y {FRONT}	1	SN:B10001--
THIS ASSEMBLY CONSISTS OF ALL PARTS SHOWN IN FIGSF4400-51A0 TO F4400-54A0				
1	07044-13620	· PLUG	1	SN:B10001--
2	07002-13634	· O-RING	1	SN:B10001--
3	07043-70211	· PLUG	2	SN:B10001--
4	419-33-11460	· BLEEDER	2	SN:B10001--
5	566-32-11620	· CAP	2	SN:B10001--
6	07041-13612	· PLUG	2	SN:B10001--
7	07002-13634	· O-RING	2	SN:B10001--
8	418-22-33130	· COVER	1	SN:B10001--
9	04020-01228	· PIN	2	SN:B10001--
10	01010-61230	· BOLT	16	SN:B10001--
11	01643-31232	· WASHER	16	SN:B10001--
12	426-06-31120	· SENSOR {TEMPERATURE}	1	SN:B10001--
13	01010-61225	· BOLT	2	SN:B10001--
14	01643-31232	· WASHER	2	SN:B10001--
15	418-22-33511	· COVER	1	SN:B10001--
16	04434-51012	· CLIP	2	SN:B10001--
17	01010-61225	· BOLT	1	SN:B10001--
18	01643-31232	· WASHER	1	SN:B10001--
19	418-22-31162	· CARRIER	2	SN:B10001--
20	418-22-31710	· SHIM¤ 005MM	6	SN:B10001--
	418-22-31720	· SHIM¤ 02MM	4	SN:B10001--
	418-22-31730	· SHIM¤ 03MM	4	SN:B10001--
	418-22-31740	· SHIM¤ 08MM	2	SN:B10001--
21	418-33-21430	· RING	2	SN:B10001--
22	01010-61230	· BOLT	16	SN:B10001--
23	01643-51232	· WASHER	16	SN:B10001--
24	418-33-31440	· SEAL	2	SN:B10001--
25	418-33-31360	· PLATE	2	SN:B10001--
26	418-33-31261	· DISK	4	SN:B10001--
27	418-33-31121	· PISTON	2	SN:B10001--
28	418-33-31410	· SEAL	2	SN:B10001--
29	418-33-31250	· PLATE	2	SN:B10001--
30	418-33-31610	· SPRING	8	SN:B10001--
31	01252-60816	· BOLT	4	SN:B10001--
32	154-61-16570	· WASHER	4	SN:B10001--

Ref. F4400-53A0 Page 150150

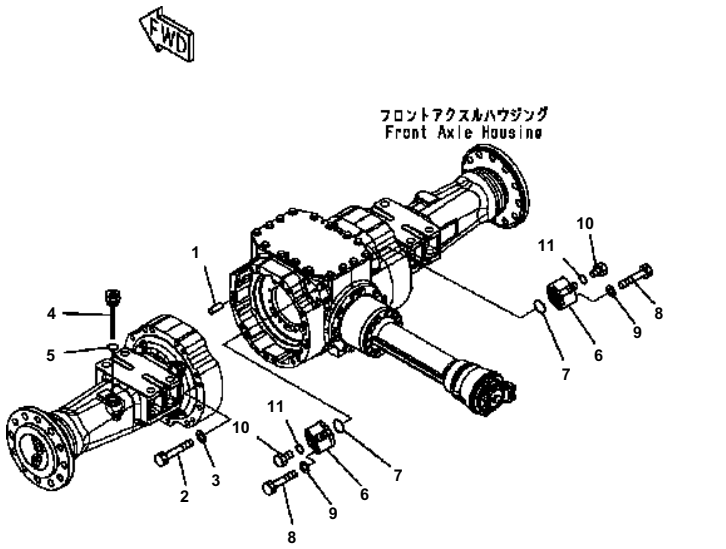

WA200-5 S/N B10001-UP

FRONT AXLE (MOUNTING PARTS AND VALVE)

Item	Part No.	Description	Qty	Options
	(418-22-30100)	AXLE ASS'Y	1	SN:B10001--
THESE ASSEMBLIES CONSIST OF ALL PARTS SHOWN IN FIGSF4400-51A0 TO F4400-54A0				
1	04020-01228	PIN {DOWEL}	4	SN:B10001--
2	01011-61620	BOLT	30	SN:B10001--
3	01643-31645	WASHER	30	SN:B10001--
4	417-22-23250	PLUG	1	SN:B10001--
5	07002-13034	O-RING	1	SN:B10001--
6	418-43-37302	VALVE	2	SN:B10001--
7	07000-12040	O-RING	2	SN:B10001--
8	01010-61290	BOLT	4	SN:B10001--
9	01643-31232	WASHER	4	SN:B10001--
10	07040-11409	PLUG	2	SN:B10001--
11	07002-11423	O-RING	2	SN:B10001--

Ref. F4400-54A0 Page 150160

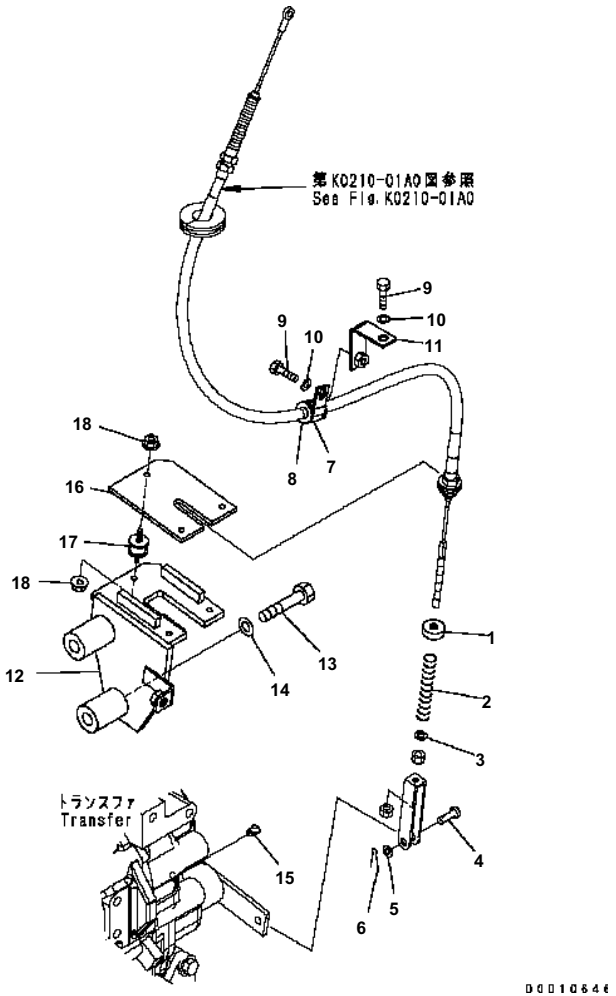

WA200-5 S/N B10001-UP

PARKING BRAKE CONTROL

Item	Part No.	Description	Qty	Options
1	417-43-18380	GUIDE	1	SN:B10001--
2	416-22-26260	SPRING	1	SN:B10001--
3	01641-20812	WASHER	1	SN:B10001--
4	04205-11028	PIN	1	SN:B10001--
5	01641-21016	WASHER	1	SN:B10001--
6	04050-13020	PIN	1	SN:B10001--
7	04434-51912	CLIP	1	SN:B10001--
8	07095-20213	CUSHION	1	SN:B10001--
9	01010-81020	BOLT	2	SN:B10001--
10	01643-31032	WASHER	2	SN:B10001--
11	42A-16-11231	PLATE	1	SN:B10001--
12	418-22-36183	BRACKET	1	SN:B10001--
13	01010-81695	BOLT	2	SN:B10001--
14	01643-31645	WASHER	2	SN:B10001--
15	07049-01620	PLUG	2	SN:B10001--
16	418-22-36192	PLATE	1	SN:B10001--
17	424-43-11240	CUSHION	3	SN:B10001--
18	01584-00605	NUT	6	SN:B10001--

Ref. F4460-01A0 Page 150170

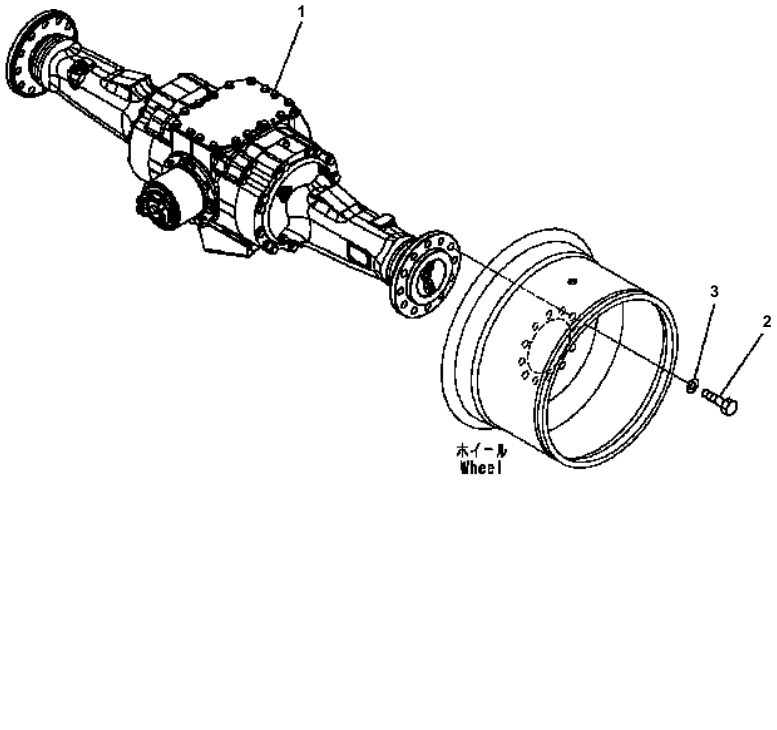

WA200-5 S/N B10001-UP

REAR AXLE MOUNTING

Item	Part No.	Description	Qty	Options
1	(418-23-30001)	AXLE ASS'Y {REAR}	1	SN:B10001--
2	419-22-12870	BOLT	24	SN:B10001--
3	01643-32460	WASHER	24	SN:B10001--

Ref. F4500-01A0 Page 150180

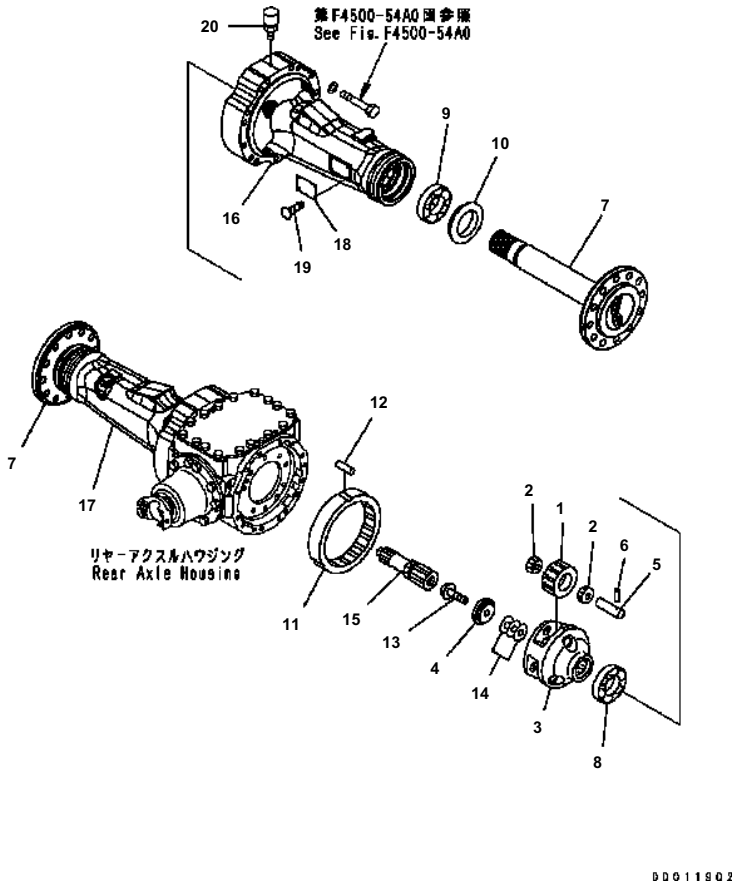

WA200-5 S/N B10001-UP

REAR AXLE (FINAL DRIVE AND HOUSING)

Item	Part No.	Description	Qty	Options
	(418-23-30001)	AXLE ASS'Y {REAR}	1	SN:B10001--
THIS ASSEMBLY CONSISTS OF ALL PARTS SHOWN IN FIGSF4500-51A0 TO F4500-54A0				
1	418-22-22532	· GEAR	6	SN:B10001--
2	417-22-22810	· BEARING {CONE}	12	SN:B10001--
3	418-23-32611	· CARRIER	2	SN:B10001--
4	418-22-32810	· HOLDER	2	SN:B10001--
5	419-22-12510	· SHAFT	6	SN:B10001--
6	419-22-12570	· PIN	6	SN:B10001--
7	418-23-32960	· SHAFT	2	SN:B10001--
8	418-22-12840	· BEARING	2	SN:B10001--
9	418-22-12850	· BEARING	2	SN:B10001--
10	418-22-12460	· SEAL	2	SN:B10001--
11	418-22-12541	· GEAR	2	SN:B10001--
12	417-22-12580	· PIN	6	SN:B10001--
13	01438-02000	· BOLT	2	SN:B10001--
14	418-22-21460	· SHIM¤ 005MM	4	SN:B10001--
	418-22-21470	· SHIM¤ 02MM	4	SN:B10001--
	418-22-21480	· SHIM¤ 05MM	4	SN:B10001--
15	418-23-32421	· SHAFT	2	SN:B10001--
16	418-23-33810	· HOUSING {LH}	1	SN:B10001--
17	418-23-33820	· HOUSING {RH}	1	SN:B10001--
18	815-02-10110	· PLATE¤ NAME {(LIMITED SUPPLY)}	1	SN:B10001--
19	04418-13060	· SCREW	4	SN:B10001--
20	07030-01030	· BREATHER	1	SN:B10001--

Ref. F4500-51A0 Page 150190

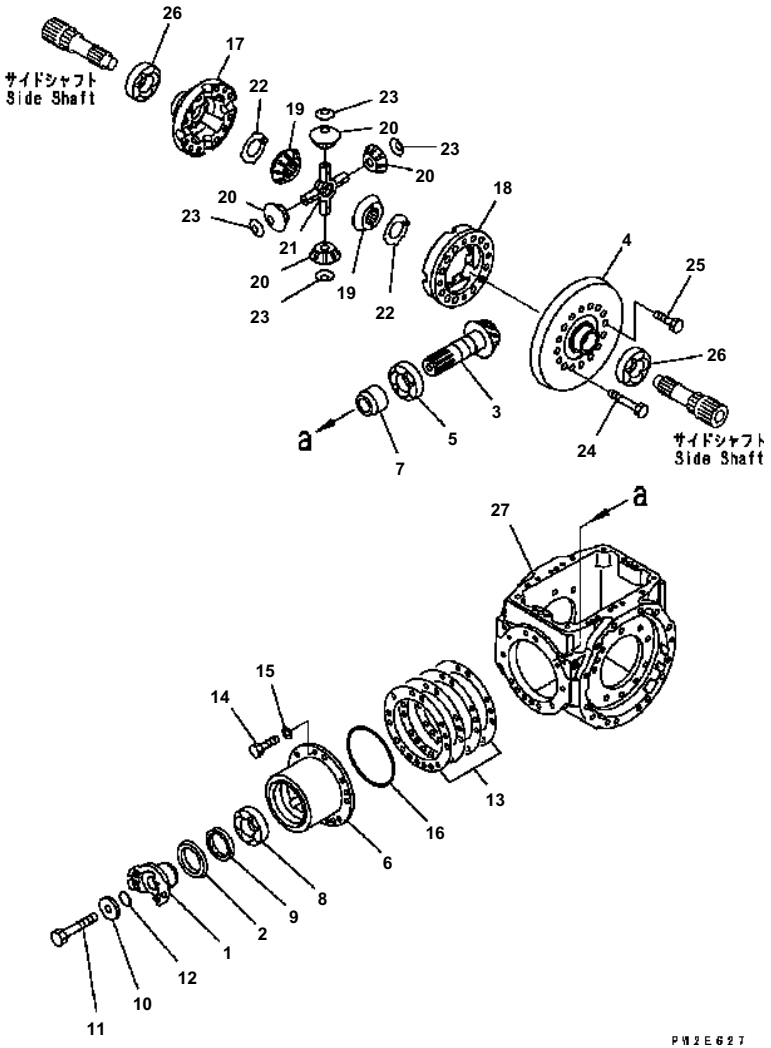

WA200-5 S/N B10001-UP

REAR AXLE (DIFFERENTIAL)

Item	Part No.	Description	Qty	Options
	(418-23-30001)	AXLE ASS'Y {REAR}	1	SN:B10001--
THIS ASSEMBLY CONSISTS OF ALL PARTS SHOWN IN FIGSF4500-51A0 TO F4500-54A0				
1	418-23-31231	・ COUPLING	1	SN:B10001--
2	418-22-21310	・ PROTECTOR	1	SN:B10001--
	418-23-31201	・ PINION ASS'Y	1	SN:B10001--
3	418-23-31211	・・ PINION	1	SN:B10001--
4	418-23-31220	・・ GEAR {BEVEL}	1	SN:B10001--
5	418-22-11810	・ BEARING	1	SN:B10001--
6	418-23-31131	・ CAGE	1	SN:B10001--
7	418-22-31861	・ SPACER	1	SN:B10001--
8	419-22-11820	・ BEARING	1	SN:B10001--
9	418-22-21330	・ SEAL {OIL}	1	SN:B10001--
10	417-15-13770	・ HOLDER	1	SN:B10001--
11	01011-61615	・ BOLT	1	SN:B10001--
12	07000-13042	・ O-RING	1	SN:B10001--
13	417-22-11361	・ SHIM¤ 005MM	2	SN:B10001--
	417-22-11371	・ SHIM¤ 02MM	2	SN:B10001--
	417-22-11381	・ SHIM¤ 03MM	2	SN:B10001--
	417-22-11391	・ SHIM¤ 08MM	1	SN:B10001--
14	01010-61235	・ BOLT	13	SN:B10001--
15	01643-31232	・ WASHER	13	SN:B10001--
16	07000-15160	・ O-RING	1	SN:B10001--
	418-23-31501	・ CASE ASS'Y	1	SN:B10001--
17	418-23-31511	・・ CASE	1	SN:B10001--
18	418-23-31521	・・ CASE	1	SN:B10001--
19	417-22-11432	・ GEAR	2	SN:B10001--
20	417-22-11420	・ PINION	4	SN:B10001--
21	418-23-31410	・ SPIDER	1	SN:B10001--
22	418-23-31460	・ WASHER	2	SN:B10001--
23	418-23-31550	・ WASHER	4	SN:B10001--
24	01010-61695	・ BOLT	12	SN:B10001--
25	01010-61645	・ BOLT	4	SN:B10001--
26	417-22-12840	・ BEARING	2	SN:B10001--
27	418-23-33111	・ HOUSING	1	SN:B10001--

Ref. F4500-52A0 Page 150200

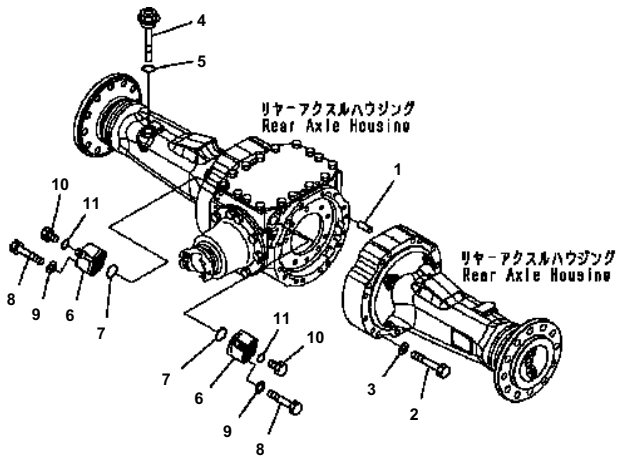

WA200-5 S/N B10001-UP

REAR AXLE (COVER AND BRAKE)

Item	Part No.	Description	Qty	Options
	(418-23-30001)	AXLE ASS'Y {REAR}	1	SN:B10001--
THESE ASSEMBLIES CONSISTS OF ALL PARTS SHOWN IN FIGSF4500-51A0 TO F4500-54A0				
1	07044-13620	PLUG	1	SN:B10001--
2	07002-13634	O-RING	1	SN:B10001--
3	07043-70211	PLUG	2	SN:B10001--
4	419-33-11460	BLEEDER	2	SN:B10001--
5	566-32-11620	CAP	2	SN:B10001--
6	07041-13612	PLUG	2	SN:B10001--
7	07002-13634	O-RING	2	SN:B10001--
8	418-23-33120	COVER	1	SN:B10001--
9	04020-01228	PIN {DOWEL}	2	SN:B10001--
10	01010-61230	BOLT	16	SN:B10001--
11	01643-31232	WASHER	16	SN:B10001--
12	418-22-31162	CARRIER	2	SN:B10001--
13	418-22-31710	SHIM¤ 005MM	6	SN:B10001--
	418-22-31720	SHIM¤ 02MM	4	SN:B10001--
	418-22-31730	SHIM¤ 03MM	4	SN:B10001--
	418-22-31740	SHIM¤ 08MM	2	SN:B10001--
14	418-33-21430	RING	2	SN:B10001--
15	01010-61230	BOLT	16	SN:B10001--
16	01643-51232	WASHER	16	SN:B10001--
17	418-33-31440	SEAL	2	SN:B10001--
18	418-33-31360	PLATE	2	SN:B10001--
19	418-33-31261	DISK	4	SN:B10001--
20	418-33-31121	PISTON	2	SN:B10001--
21	418-33-31410	SEAL	2	SN:B10001--
22	418-33-31250	PLATE	2	SN:B10001--
23	418-33-31610	SPRING	8	SN:B10001--
24	01252-60816	BOLT	4	SN:B10001--
25	154-61-16570	WASHER	4	SN:B10001--

Ref. F4500-53A0 Page 150210

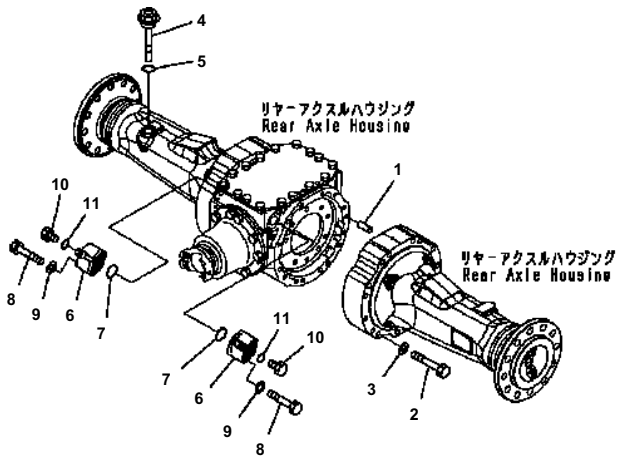

DDD11903

WA200-5 S/N B10001-UP

REAR AXLE (MOUNTING PARTS AND VALVE)

Item	Part No.	Description	Qty	Options
	(418-23-30001)	AXLE ASS'Y {REAR}	1	SN:B10001--
THESE ASSEMBLIES CONSISTS OF ALL PARTS SHOWN IN FIGSF4500-51A0 TO F4500-54A0				
1	04020-01228	PIN {DOWEL}	4	SN:B10001--
2	01011-61620	BOLT	30	SN:B10001--
3	01643-31645	WASHER	30	SN:B10001--
4	417-22-23250	PLUG	1	SN:B10001--
5	07002-13034	O-RING	1	SN:B10001--
6	418-43-37302	VALVE	2	SN:B10001--
7	07000-12040	O-RING	2	SN:B10001--
8	01010-61290	BOLT	4	SN:B10001--
9	01643-31232	WASHER	4	SN:B10001--
10	07040-11409	PLUG	2	SN:B10001--
11	07002-11423	O-RING	2	SN:B10001--

Ref. F4500-54A0 Page 150220

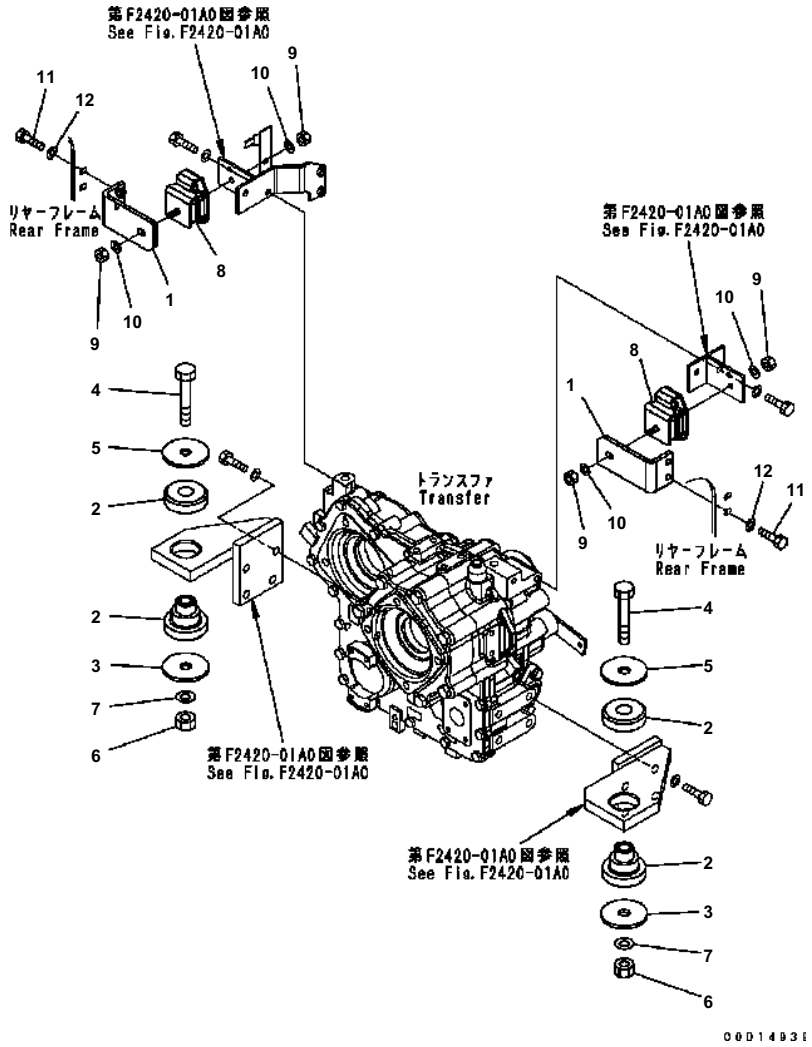

WA200-5 S/N B10001-UP

TRANSFER MOUNT

Item	Part No.	Description	Qty	Options
1	418-14-31133	PLATE	2	SN:B10320--
	418-14-31132	PLATE	2	SN:B10001--B10319
2	418-01-11112	CUSHION	2	SN:B10001--
	418-01-11121	・ CUSHION	1	SN:B10001--
	☆	・ CUSHION	1	SN:B10001--
3	419-01-11162	WASHER	2	SN:B10001--
4	01011-82220	BOLT	2	SN:B10001--
5	419-01-11162	WASHER	2	SN:B10001--
6	01580-02218	NUT	2	SN:B10001--
7	01643-32260	WASHER	2	SN:B10001--
8	20S-01-71331	CUSHION	2	SN:B10001--
9	01580-11008	NUT	4	SN:B10001--
10	01643-31032	WASHER	4	SN:B10001--
11	01010-81035	BOLT	4	SN:B10320--
12	01643-31032	WASHER	4	SN:B10320--
	01010-81030	BOLT	4	SN:B10001--B10319
	01643-31032	WASHER	4	SN:B10001--B10319

Ref. F4810-01A0 Page 150230

HYDRAULIC SYSTEM

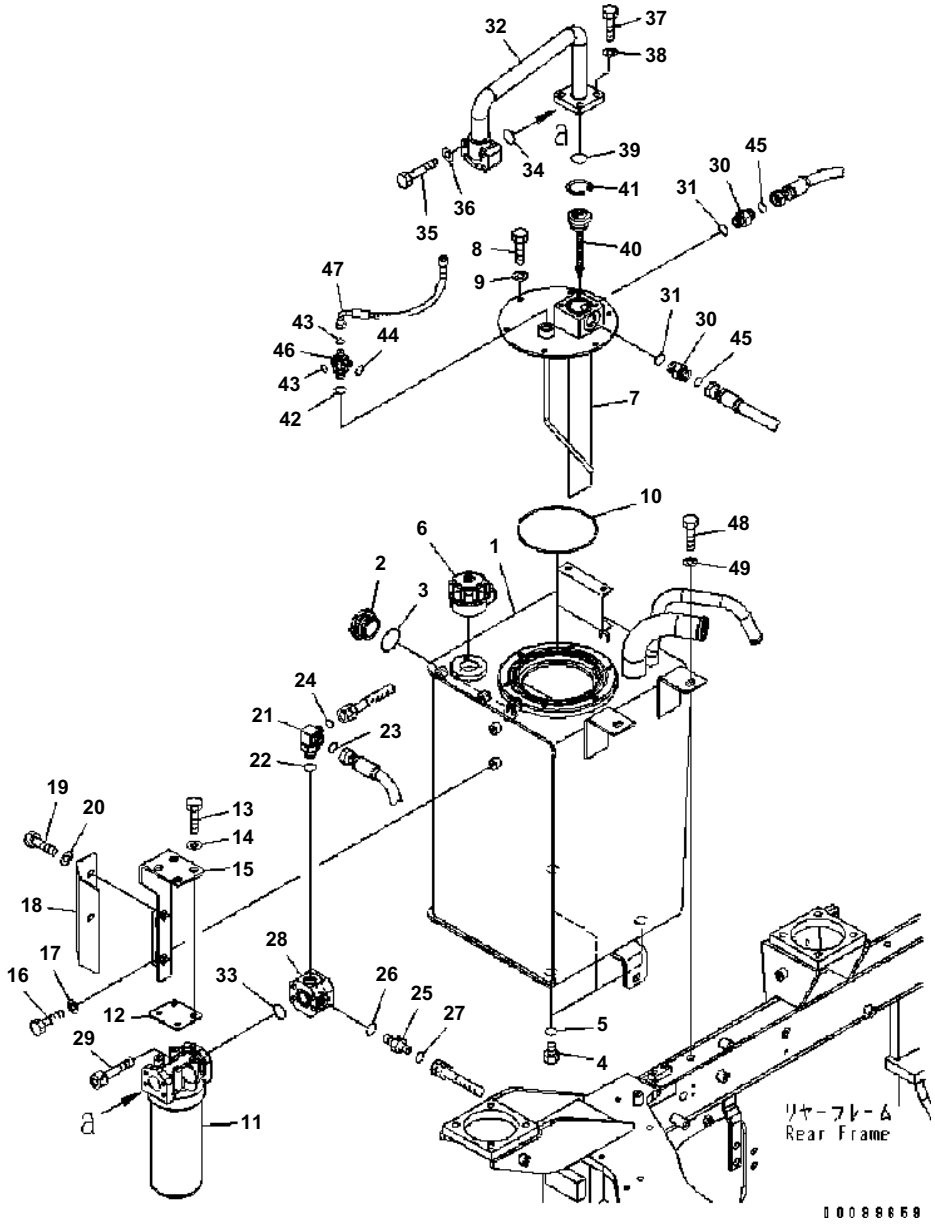

WA200-5 S/N B10001-UP

HYDRAULIC TANK

Item	Part No.	Description	Qty	Options
1	417-60-35221	HYDRAULIC TANK	1	SN:B10001--
2	421-60-11622	GAUGE {SIGHT}	1	SN:B10001--
3	07002-15234	O-RING	1	SN:B10001--
4	07040-12412	PLUG	3	SN:B10001--
5	07002-12434	O-RING	3	SN:B10001--
6	418-60-35120	BREATHER	1	SN:B10001--
	417-60-15380	· ELEMENT	1	SN:B10001--
7	417-60-35160	COVER ASS'Y	1	SN:B10001--
8	01010-81025	BOLT	6	SN:B10001--
9	01643-31032	WASHER	6	SN:B10001--
10	07000-15200	O-RING	1	SN:B10001--
11	419-60-35142	FILTER ASS'Y	1	SN:B10001--
	419-60-35152	· CARTRIDGE	1	SN:B10001--
12	418-60-35190	PLATE	1	SN:B10001--
13	01010-81035	BOLT	4	SN:B10001--
14	203-54-56970	WASHER	4	SN:B10001--
15	418-60-35152	PLATE	1	SN:B10001--
16	01010-81020	BOLT	2	SN:B10001--
17	203-54-56970	WASHER	2	SN:B10001--
18	418-60-35210	COVER	1	SN:B10001--
19	01010-81020	BOLT	2	SN:B10001--
20	01643-31032	WASHER	2	SN:B10001--
21	417-62-33250	ELBOW	1	SN:B10001--
22	07002-12434	O-RING	1	SN:B10001--
23	02896-11012	O-RING	1	SN:B10001--
24	02896-11009	O-RING	1	SN:B10001--
25	02781-00210	UNION	1	SN:B10001--
26	07002-11423	O-RING	1	SN:B10001--
27	02896-11008	O-RING	1	SN:B10001--
28	418-62-31362	FLANGE	1	SN:B10001--
29	01252-71055	BOLT	4	SN:B10001--
30	02781-00522	UNION	2	SN:B10001--
31	07002-12434	O-RING	2	SN:B10001--
32	418-62-33540	TUBE	1	SN:B10001--
33	07000-13038	O-RING	1	SN:B10001--
34	07000-13035	O-RING	1	SN:B10001--
35	01010-81065	BOLT	4	SN:B10001--
36	01643-51032	WASHER	4	SN:B10001--
37	01010-81035	BOLT	4	SN:B10001--
38	01643-31032	WASHER	4	SN:B10001--

Ref. H0110-01A0A Page 180010

WA200-5 S/N B10001-UP

HYDRAULIC TANK

Item	Part No.	Description	Qty	Options
39	07000-13050	O-RING	1	SN:B10001--
40	418-62-31620	VALVE ASS'Y	1	SN:B10001--
41	04065-04218	RING	1	SN:B10001--
42	07002-12034	O-RING	1	SN:B10001--
43	02896-11008	O-RING	2	SN:B10001--
44	02896-11009	O-RING	1	SN:B10001--
45	02896-11015	O-RING	2	SN:B10001--
46	418-62-34271	TEE	1	SN:B10001--
47	418-62-34192	HOSE	1	SN:B10001--
48	01010-81235	BOLT	3	SN:B10001--
49	01643-31232	WASHER	3	SN:B10001--

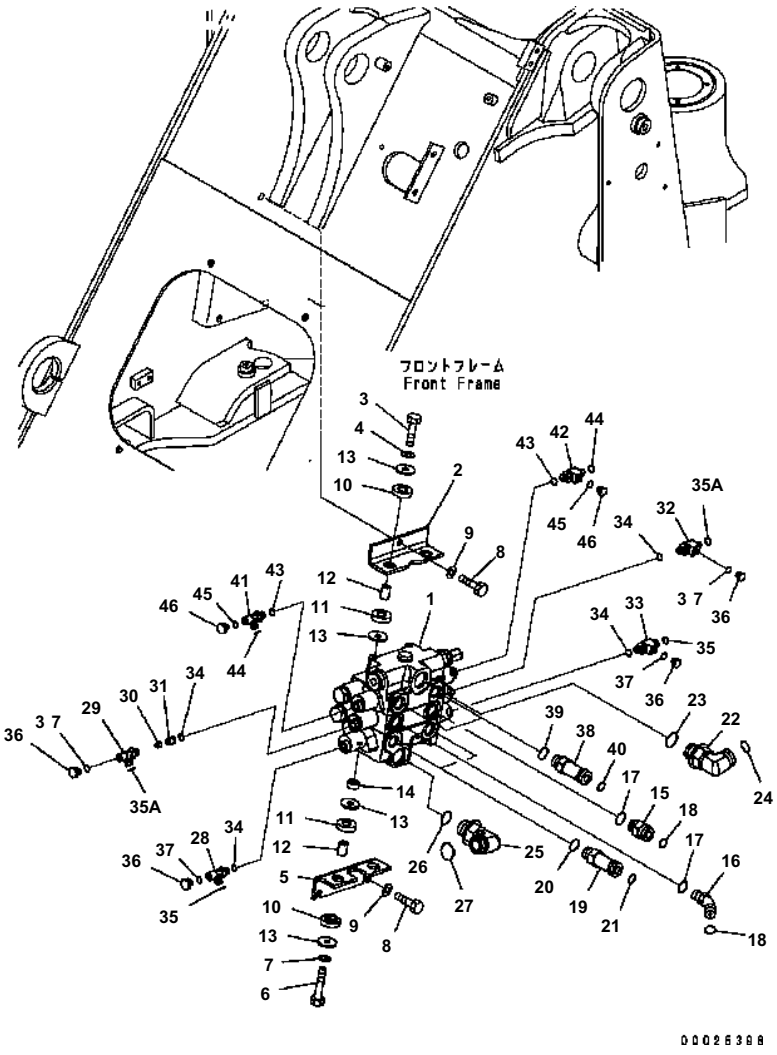

WA200-5 S/N B10001-UP

MAIN VALVE (FOR 3-SPOOL VALVE)

Item	Part No.	Description	Qty	Options
1	(709-82-12400)	CONTROL VALVE	1	SN:B10226--
	(709-83-12400)	CONTROL VALVE	1	SN:B10001--B10225
2	417-64-31120	BRACKET	1	SN:B10001--
3	01010-81050	BOLT	2	SN:B10001--
4	01643-31032	WASHER	2	SN:B10001--
5	417-64-31110	BRACKET	1	SN:B10001--
6	01010-81060	BOLT	2	SN:B10001--
7	01643-31032	WASHER	2	SN:B10001--
8	01010-81235	BOLT	3	SN:B10001--
9	01643-31232	WASHER	3	SN:B10001--
10	419-43-17930	CUSHION	4	SN:B10001--
11	415-64-13130	CUSHION	4	SN:B10001--
12	417-54-13470	SPACER	4	SN:B10001--
13	415-64-13120	WASHER	8	SN:B10001--
14	198-43-15310	COLLAR¤ 10MM	2	SN:B10001--
15	02781-00628	UNION	1	SN:B10001--
16	02783-10628	ELBOW	1	SN:B10001--
17	07002-12434	O-RING	2	SN:B10001--B10225
18	02896-11018	O-RING	2	SN:B10001--
19	418-62-33640	UNION	2	SN:B10001--
20	07002-12434	O-RING	2	SN:B10001--
21	02896-11018	O-RING	2	SN:B10001--
22	21W-62-42640	ELBOW	1	SN:B10001--
23	07002-13334	O-RING	1	SN:B10001--
24	11Y-62-11980	O-RING	1	SN:B10001--
25	21W-62-42640	ELBOW	1	SN:B10001--
26	07002-13334	O-RING	1	SN:B10001--
27	11Y-62-11980	O-RING	1	SN:B10001--
28	02782-50210	ELBOW	1	SN:B10001--
	418-62-34421	VALVE ASS'Y	1	SN:B10001--
29	418-62-34490	· ELBOW	1	SN:B10001--
30	418-62-34440	· POPPET	1	SN:B10001--
31	21Y-62-11591	· PLUG	1	SN:B10001--
32	418-62-34470	TEE	1	SN:B10001--
33	418-62-34130	TEE	1	SN:B10001--
34	07002-11423	O-RING	4	SN:B10001--
35	02896-11008	O-RING	2	SN:B10001--
35A	02896-11009	O-RING	2	SN:B10001--
36	07040-11007	PLUG	4	SN:B10001--
37	07002-11023	O-RING	4	SN:B10001--

Ref. H0120-01A2 Page 180020

WA200-5 S/N B10001-UP

MAIN VALVE (FOR 3-SPOOL VALVE)

Item	Part No.	Description	Qty	Options
38	418-62-33640	UNION	2	SN:B10001--
39	07002-12434	O-RING	2	SN:B10001--
40	02896-11018	O-RING	2	SN:B10001--
41	02782-50210	ELBOW	1	SN:B10001--
42	418-62-34130	TEE	1	SN:B10001--
43	07002-11423	O-RING	2	SN:B10001--B10225
44	02896-11008	O-RING	2	SN:B10001--
45	07002-11023	O-RING	2	SN:B10001--
46	07040-11007	PLUG	2	SN:B10001--

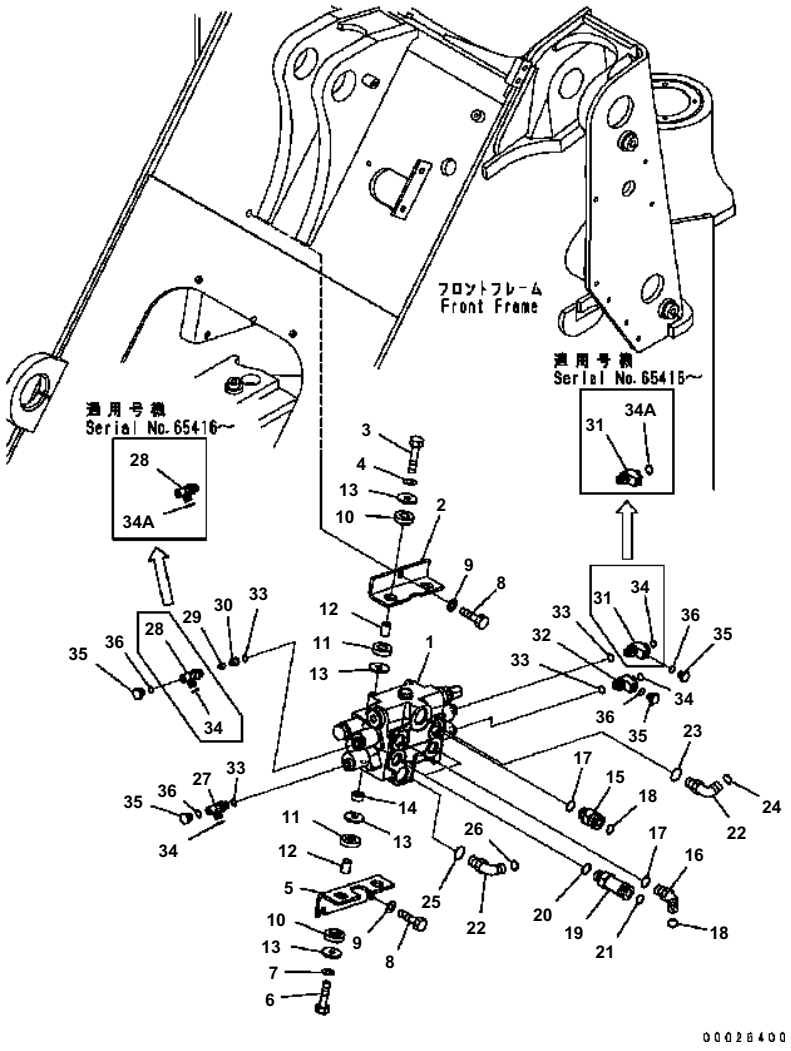

WA200-5 S/N B10001-UP

MAIN VALVE

Item	Part No.	Description	Qty	Options
1	(709-82-12400)	CONTROL VALVE	1	SN:B10001--
2	417-64-31120	BRACKET	1	SN:B10001--
3	01010-81050	BOLT	2	SN:B10001--
4	01643-31032	WASHER	2	SN:B10001--
5	417-64-31110	BRACKET	1	SN:B10001--
6	01010-81060	BOLT	2	SN:B10001--
7	01643-31032	WASHER	2	SN:B10001--
8	01010-81235	BOLT	3	SN:B10001--
9	01643-31232	WASHER	3	SN:B10001--
10	419-43-17930	CUSHION	4	SN:B10001--
11	415-64-13130	CUSHION	4	SN:B10001--
12	417-54-13470	SPACER	4	SN:B10001--
13	415-64-13120	WASHER	8	SN:B10001--
14	198-43-15310	COLLAR¤ 10MM	2	SN:B10001--
15	02781-00628	UNION	1	SN:B10001--
16	02783-10628	ELBOW	1	SN:B10001--
17	07002-12434	O-RING	2	SN:B10001--
18	02896-11018	O-RING	2	SN:B10001--
19	418-62-33640	UNION	2	SN:B10001--
20	07002-12434	O-RING	2	SN:B10001--
21	02896-11018	O-RING	2	SN:B10001--
22	21W-62-42640	ELBOW	2	SN:B10001--
23	07002-13334	O-RING	1	SN:B10001--
24	11Y-62-11980	O-RING	1	SN:B10001--
25	07002-13334	O-RING	1	SN:B10001--
26	11Y-62-11980	O-RING	1	SN:B10001--
27	21W-62-42640	ELBOW	1	SN:B10001--
	418-62-34421	VALVE ASS'Y	1	SN:B10001--
28	418-62-34490	・ ELBOW	1	SN:B10001--
29	418-62-34440	・ POPPET	1	SN:B10001--
30	21Y-62-11591	・ PLUG	1	SN:B10001--
31	418-62-34470	TEE	1	SN:B10001--
32	418-62-34130	TEE	1	SN:B10001--
33	07002-11423	O-RING	4	SN:B10001--
34	02896-11008	O-RING	2	SN:B10001--
34A	02896-11009	O-RING	2	SN:B10001--
35	07040-11007	PLUG	4	SN:B10001--
36	07002-01023	O-RING	4	SN:B10001--

Ref. H0120-01A4 Page 180030

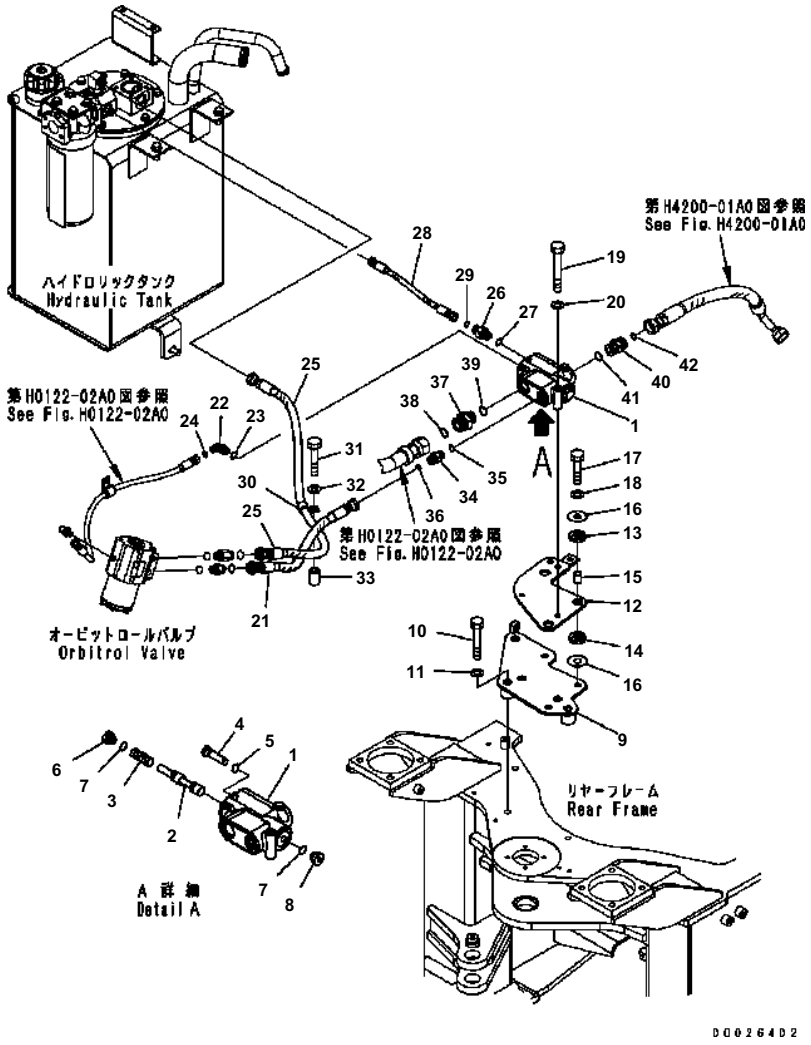

WA200-5 S/N B10001-UP

STEERING VALVE

Item	Part No.	Description	Qty	Options
	417-64-25020	PRIORITY VALVE ASS'Y	1	SN:B10001--
1	(☆416-64-15210)	・ HOUSING	1	SN:B10001--
2	417-64-25310	・ SPOOL	1	SN:B10001--
3	416-64-15230	・ SPRING	1	SN:B10001--
4	417-64-25330	・ VALVE ASS'Y	1	SN:B10001--
5	417-64-25320	・ O-RING	1	SN:B10001--
6	416-64-15250	・ PLUG	1	SN:B10001--
7	416-64-15260	・ O-RING	2	SN:B10001--
8	416-64-15270	・ PLUG	1	SN:B10001--
9	418-64-35513	BRACKET	1	SN:B10001--
10	01010-81665	BOLT	3	SN:B10001--
11	01643-31645	WASHER	3	SN:B10001--
12	418-64-35524	BRACKET	1	SN:B10001--
13	417-62-31170	CUSHION	3	SN:B10001--
14	417-62-31180	CUSHION	3	SN:B10001--
15	417-62-14130	SPACER	3	SN:B10001--
16	419-43-17920	WASHER	6	SN:B10001--
17	01010-81255	BOLT	3	SN:B10001--
18	01643-31232	WASHER	3	SN:B10001--
19	01010-80885	BOLT	2	SN:B10001--
20	01643-30823	WASHER	2	SN:B10001--
21	02765-B0405	HOSE	1	SN:B10001--
22	418-62-32162	ELBOW	1	SN:B10001--
23	416-62-11480	O-RING	1	SN:B10001--
24	02896-11008	O-RING	1	SN:B10001--
25	417-62-31191	HOSE	1	SN:B10001--
26	418-62-32110	NIPPLE	1	SN:B10001--
27	416-62-11480	O-RING	1	SN:B10001--
28	02760-00203	HOSE	1	SN:B10001--
29	02896-11008	O-RING	1	SN:B10001--
30	04434-51812	CLIP	1	SN:B10001--
31	01010-81060	BOLT	1	SN:B10001--
32	01643-31032	WASHER	1	SN:B10001--
33	205-03-71330	COLLAR	1	SN:B10001--
34	417-62-31120	NIPPLE	1	SN:B10001--
35	415-62-11560	O-RING	1	SN:B10001--
36	02896-11012	O-RING	1	SN:B10001--
37	417-62-31670	UNION	1	SN:B10001--
38	11Y-62-11980	O-RING	1	SN:B10001--
39	416-62-13450	O-RING	1	SN:B10001--

Ref. H0122-01A0 Page 180040

WA200-5 S/N B10001-UP

STEERING VALVE

Item	Part No.	Description	Qty	Options
40	417-62-31610	NIPPLE	1	SN:B10001--
41	416-62-13450	O-RING	1	SN:B10001--
42	02896-11018	O-RING	1	SN:B10001--

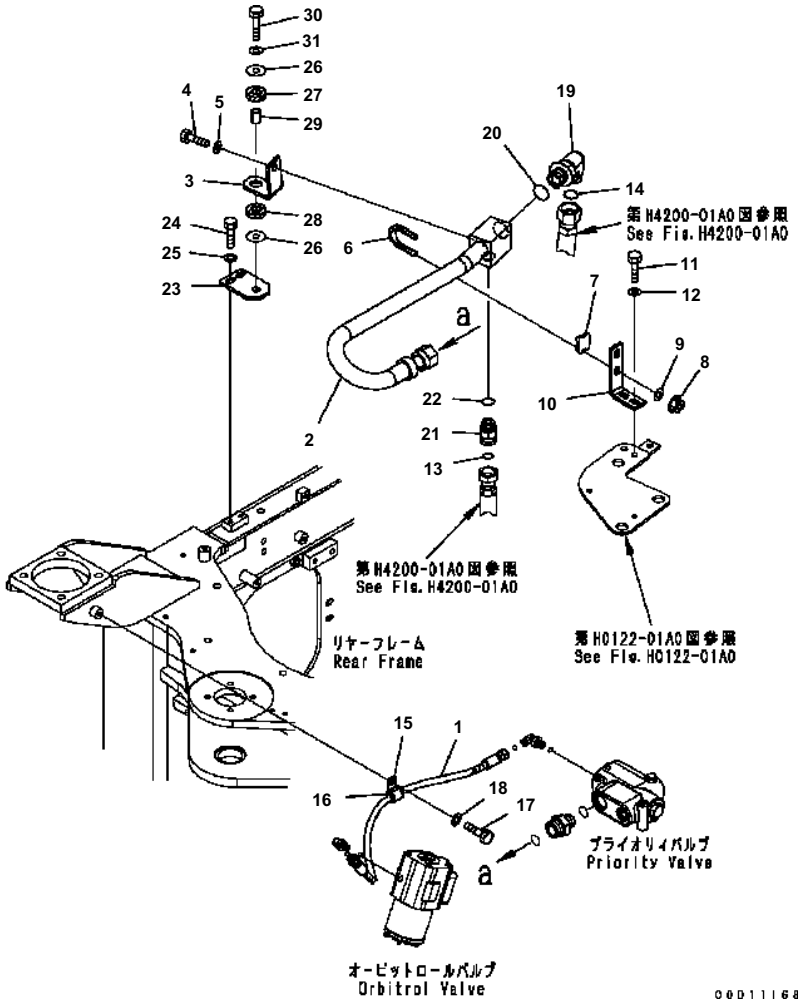

WA200-5 S/N B10001-UP

STEERING VALVE (PIPING) (PRIORITY VALVE TO STEERING VALVE)

Item	Part No.	Description	Qty	Options
1	417-62-31720	HOSE	1	SN:B10001--
2	418-62-31525	TUBE	1	SN:B10001--
3	417-62-31240	PLATE	1	SN:B10001--
4	01010-81225	BOLT	1	SN:B10001--
5	01643-31232	WASHER	1	SN:B10001--
6	07283-23450	CLIP	1	SN:B10001--
7	07283-53444	SEAT	1	SN:B10001--
8	01597-01009	NUT	2	SN:B10001--
9	01643-31032	WASHER	2	SN:B10001--
10	418-64-35530	PLATE	1	SN:B10001--
11	01010-81025	BOLT	2	SN:B10001--
12	01643-31032	WASHER	2	SN:B10001--
13	02896-11018	O-RING	1	SN:B10001--
14	11Y-62-11980	O-RING	1	SN:B10001--
15	04434-51710	CLIP	1	SN:B10001--
16	07095-20211	CUSHION	1	SN:B10001--
17	01010-81020	BOLT	1	SN:B10001--
18	01643-31032	WASHER	1	SN:B10001--
19	21W-62-42640	ELBOW	1	SN:B10001--
20	07002-13334	O-RING	1	SN:B10001--
21	02781-00628	UNION	1	SN:B10001--
22	07002-12434	O-RING	1	SN:B10001--
23	418-64-35550	PLATE	1	SN:B10001--
24	01010-81025	BOLT	2	SN:B10001--
25	01643-31032	WASHER	2	SN:B10001--
26	419-43-17920	WASHER	2	SN:B10001--
27	417-62-31170	CUSHION	1	SN:B10001--
28	417-62-31180	CUSHION	1	SN:B10001--
29	417-62-14130	SPACER	1	SN:B10001--
30	01010-81255	BOLT	1	SN:B10001--
31	01643-31232	WASHER	1	SN:B10001--

Ref. H0122-02A0 Page 180050

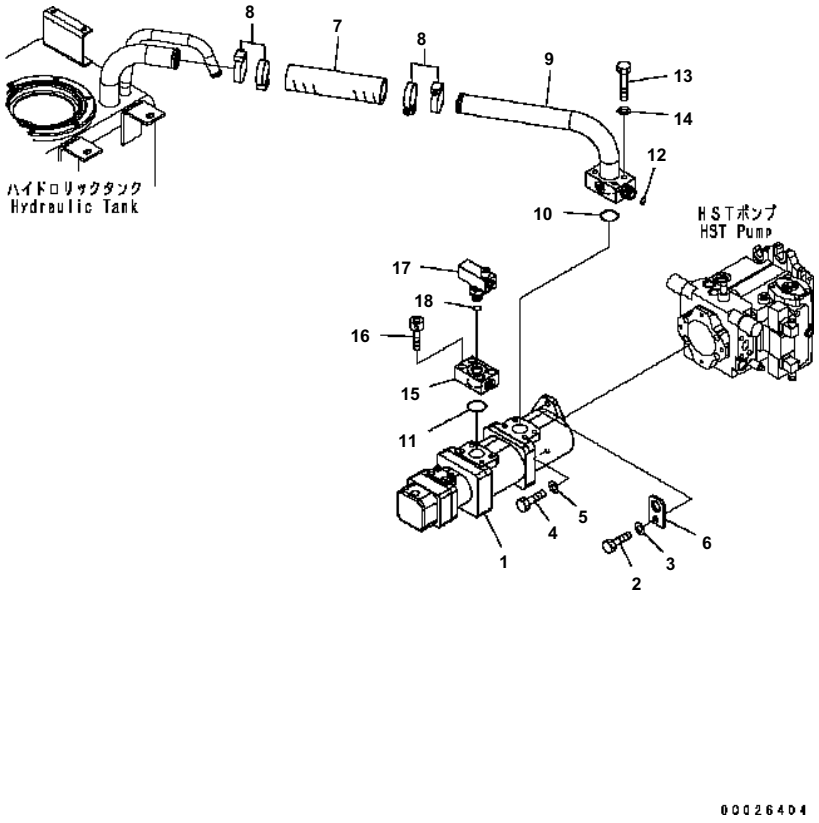

WA200-5 S/N B10001-UP

HYDRAULIC PUMP

Item	Part No.	Description	Qty	Options
1	(705-56-26081)	PUMP ASS'Y	1	SN:B10247--
	(705-56-26080)	PUMP ASS'Y	1	SN:B10001--B10246
2	01010-81240	BOLT	1	SN:B10001--
3	01643-31232	WASHER	1	SN:B10001--
4	01010-81235	BOLT	1	SN:B10001--
5	01643-31232	WASHER	1	SN:B10001--
6	417-18-32161	PLATE	1	SN:B10001--
7	07260-04725	HOSE	1	SN:B10001--
8	07289-00070	CLAMP	4	SN:B10001--
9	417-62-33112	TUBE	1	SN:B10001--
10	07000-12045	O-RING	1	SN:B10001--
11	07000-13048	O-RING	1	SN:B10001--
12	02896-11018	O-RING	1	SN:B10001--
13	01010-81265	BOLT	4	SN:B10001--
14	01643-51232	WASHER	4	SN:B10001--
15	418-62-33442	FLANGE	1	SN:B10001--
16	01252-71245	BOLT	4	SN:B10001--
17	418-62-33490	TEE	1	SN:B10001--
18	07002-12434	O-RING	1	SN:B10001--

Ref. H0210-01A0 Page 180060

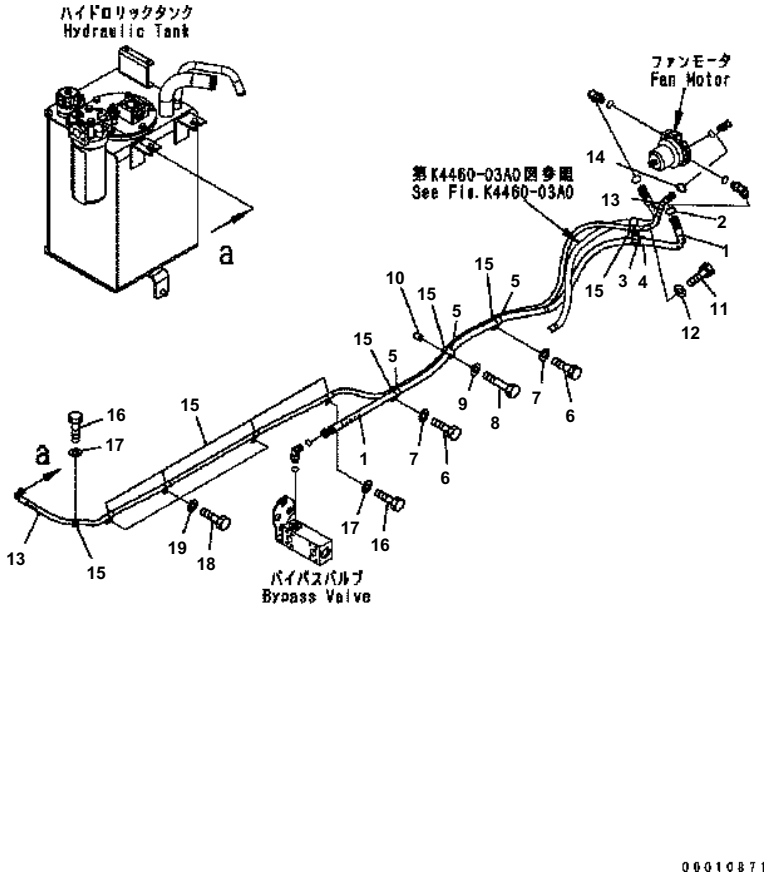

WA200-5 S/N B10001-UP

FAN DRIVE PIPING

Item	Part No.	Description	Qty	Options
1	417-03-33321	HOSE	1	SN:B10001--
2	08210-01803	O-RING	1	SN:B10001--
3	04434-52511	CLIP	1	SN:B10001--
4	07095-20318	CUSHION	1	SN:B10001--
5	04434-51912	CLIP	3	SN:B10001--
6	01010-81020	BOLT	2	SN:B10001--
7	01643-31032	WASHER	2	SN:B10001--
8	01010-81050	BOLT	1	SN:B10001--
9	01643-31032	WASHER	1	SN:B10001--
10	6134-12-5120	SPACER	1	SN:B10001--
11	01010-81030	BOLT	1	SN:B10001--
12	01643-31032	WASHER	1	SN:B10001--
13	417-03-33331	HOSE	1	SN:B10001--
14	08210-01203	O-RING	1	SN:B10001--
15	04434-51210	CLIP	9	SN:B10001--
16	01010-81020	BOLT	2	SN:B10001--
17	01643-31032	WASHER	2	SN:B10001--
18	01010-81025	BOLT	3	SN:B10001--
19	01643-31032	WASHER	3	SN:B10001--

Ref. H2260-01A0 Page 180070

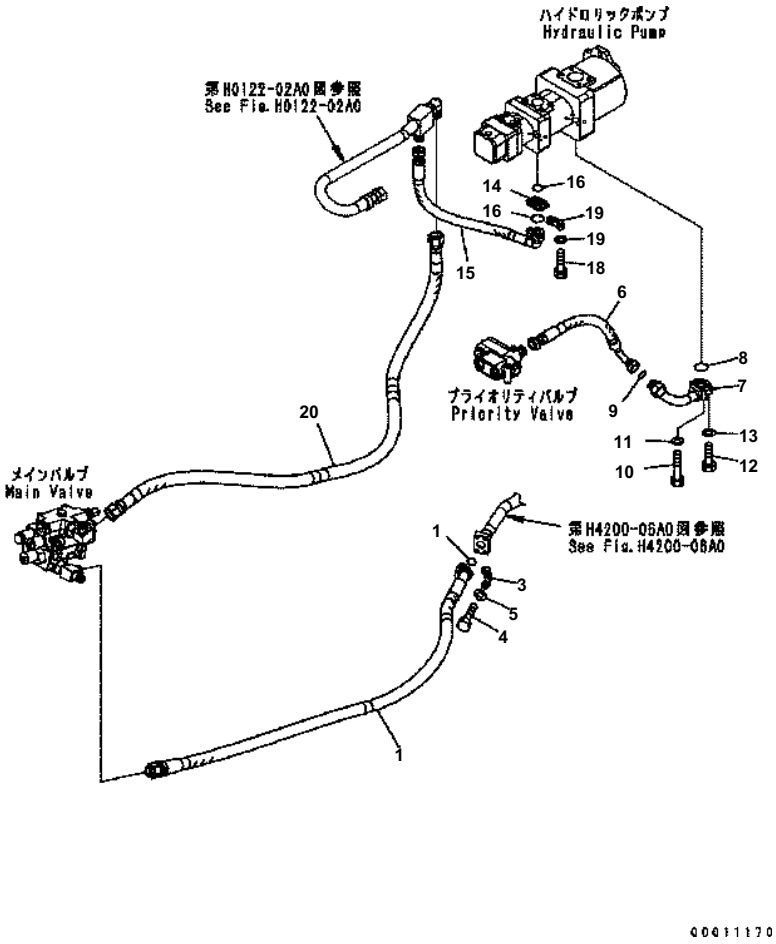

WA200-5 S/N B10001-UP

HYDRAULIC PIPING (DRAIN LINE HOSE)

Item	Part No.	Description	Qty	Options
1	417-62-31622	HOSE	1	SN:B10001--
2	07000-13032	O-RING	1	SN:B10001--
3	07371-31049	FLANGE	2	SN:B10001--
4	07372-21035	BOLT	4	SN:B10001--
5	01643-51032	WASHER	4	SN:B10001--
6	418-62-31874	HOSE	1	SN:B10001--
7	417-62-33270	TUBE	1	SN:B10001--
8	07000-13030	O-RING	1	SN:B10001--
9	02896-11018	O-RING	1	SN:B10001--
10	01010-80855	BOLT	2	SN:B10001--
11	01643-30823	WASHER	2	SN:B10001--
12	01010-80840	BOLT	2	SN:B10001--
13	01643-30823	WASHER	2	SN:B10001--
14	07373-30600	SPACER	1	SN:B10001--
15	417-62-31510	HOSE	1	SN:B10001--
16	07000-13025	O-RING	2	SN:B10001--
17	07371-30638	FLANGE	2	SN:B10001--
18	01010-80840	BOLT	4	SN:B10001--
19	01643-50823	WASHER	4	SN:B10001--
20	417-62-31652	HOSE	1	SN:B10001--

Ref. H4200-01A0 Page 180080

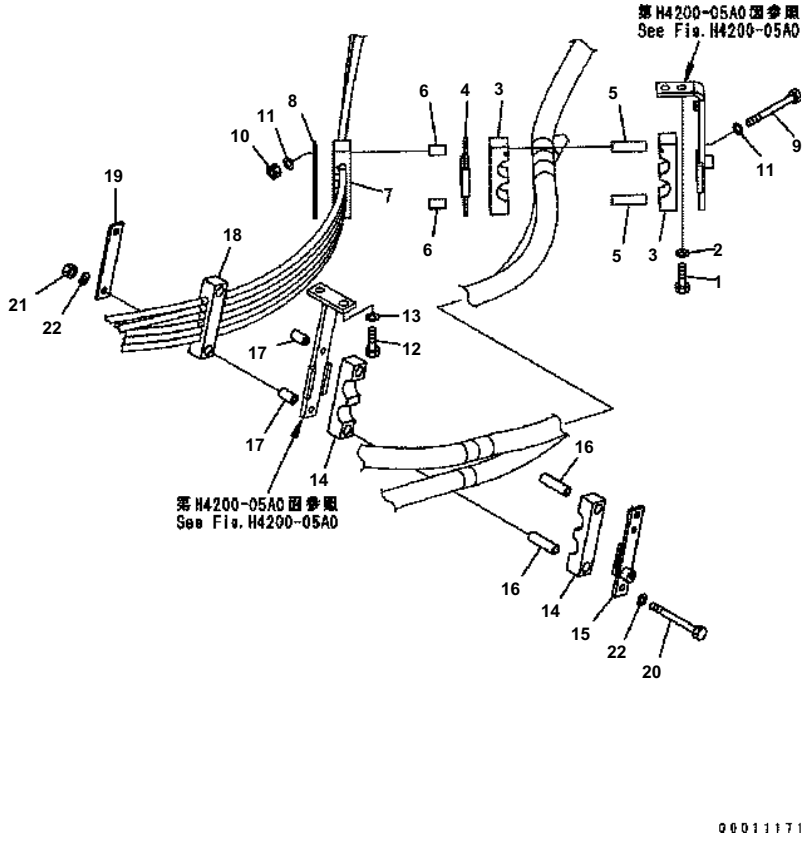

WA200-5 S/N B10001-UP

HYDRAULIC PIPING (P.P.C. PIPING MOUNT)

Item	Part No.	Description	Qty	Options
1	01010-81250	BOLT	2	SN:B10001--
2	01643-31232	WASHER	2	SN:B10001--
3	418-62-33353	CLAMP	2	SN:B10001--
4	418-62-23780	PLATE	1	SN:B10001--
5	417-62-23690	SPACER	2	SN:B10001--
6	418-62-23790	SPACER	2	SN:B10001--
7	418-62-34480	RUBBER	1	SN:B10001--
8	418-62-23810	PLATE	1	SN:B10001--
9	01011-81030	BOLT	2	SN:B10001--
10	01580-11008	NUT	2	SN:B10001--
11	01643-31032	WASHER	4	SN:B10001--
12	01010-81235	BOLT	2	SN:B10001--
13	01643-31232	WASHER	2	SN:B10001--
14	418-62-33353	CLAMP	2	SN:B10001--
15	418-62-33422	PLATE	1	SN:B10001--
16	417-62-23690	SPACER	2	SN:B10001--
17	418-62-23790	SPACER	2	SN:B10001--
18	418-62-34480	RUBBER	1	SN:B10001--
19	418-62-23810	PLATE	1	SN:B10001--
20	01011-81030	BOLT	2	SN:B10001--
21	01580-11008	NUT	2	SN:B10001--
22	01643-31032	WASHER	4	SN:B10001--

Ref. H4200-02A0 Page 180090

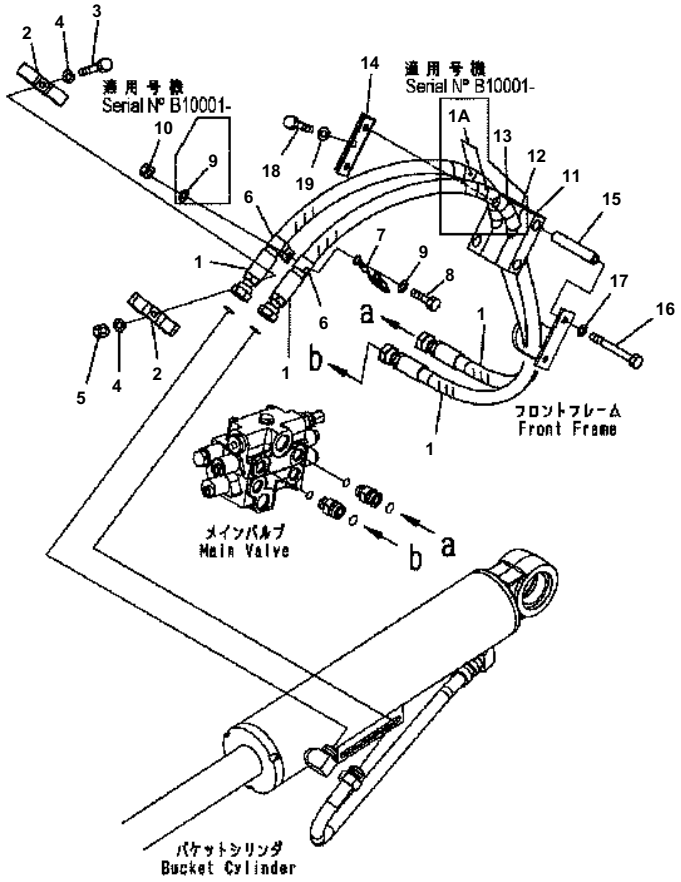

WA200-5 S/N B10001-UP

HYDRAULIC PIPING (DUMP CYLINDER PIPING)

Item	Part No.	Description	Qty	Options
1	417-62-33162	HOSE	2	SN:B10001--
1A	08210-01802	・ SPIRAL TUBE	1	SN:B10001--
2	417-62-13470	CLAMP	2	SN:B10001--
3	01010-81055	BOLT	1	SN:B10001--
4	01643-51032	WASHER	2	SN:B10001--
5	01580-11008	NUT	1	SN:B10001--
6	04434-52712	CLIP	2	SN:B10001--
7	419-62-13460	WIRE	1	SN:B10001--
8	01010-81230	BOLT	2	SN:B10001--
9	01643-31232	WASHER	2	SN:B10001--
10	01580-11210	NUT	2	SN:B10001--
11	416-62-33840	STRIP	1	SN:B10001--
12	416-62-33850	STRIP	1	SN:B10001--
13	416-62-33860	STRIP	1	SN:B10001--
14	417-62-33510	PLATE	1	SN:B10001--
15	195-01-16261	COLLAR	2	SN:B10001--
16	01011-81045	BOLT	2	SN:B10001--
17	01643-31032	WASHER	2	SN:B10001--
18	01010-81025	BOLT	1	SN:B10001--
19	01643-31032	WASHER	1	SN:B10001--

Ref. H4200-03A0 Page 180100

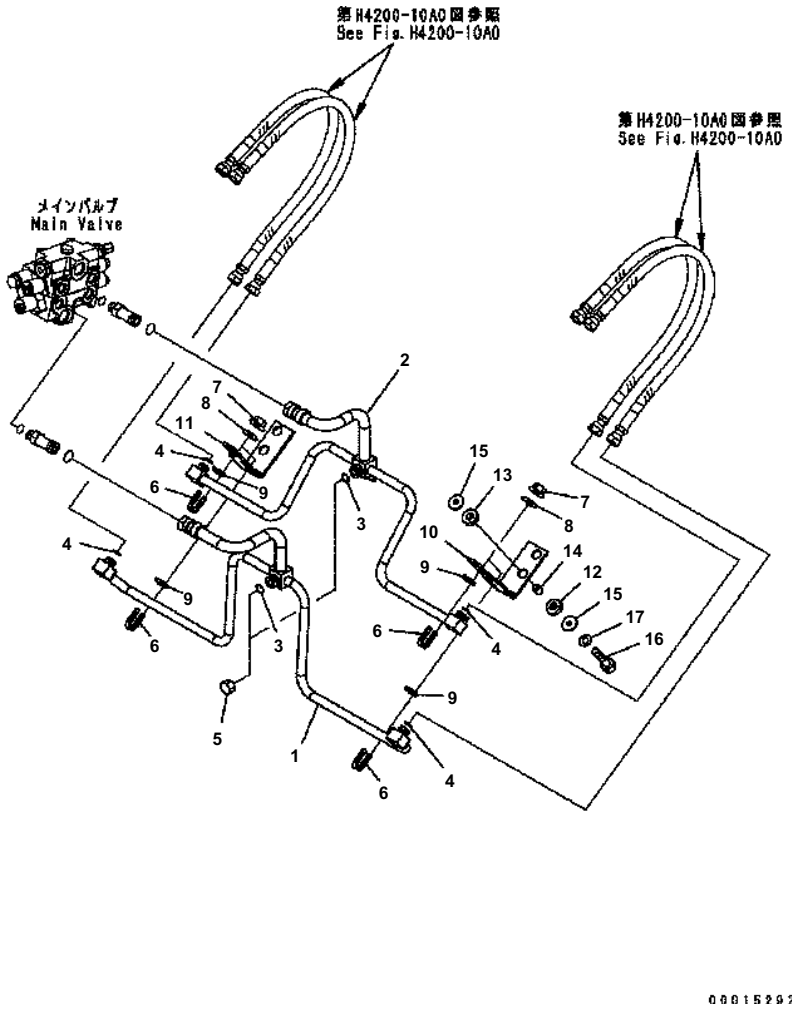

WA200-5 S/N B10001-UP

HYDRAULIC PIPING (LIFT CYLINDER LINE)

Item	Part No.	Description	Qty	Options
1	417-62-33172	TUBE	1	SN:B10001--
2	417-62-33181	TUBE	1	SN:B10001--
3	02789-00628	O-RING	2	SN:B10001--
4	02896-11015	O-RING	4	SN:B10001--
5	02789-10628	PLUG	2	SN:B10001--
6	07283-32236	CLIP	4	SN:B10001--
7	01597-01009	NUT	8	SN:B10001--
8	01643-31032	WASHER	8	SN:B10001--
9	07283-52232	SEAT	4	SN:B10001--
10	417-62-33280	BRACKET {L.H.}	1	SN:B10001--
11	417-62-33290	BRACKET {R.H.}	1	SN:B10001--
12	415-64-13130	CUSHION	4	SN:B10001--
13	419-43-17930	CUSHION	4	SN:B10001--
14	417-54-13470	SPACER	4	SN:B10001--
15	415-64-13120	WASHER	8	SN:B10001--
16	01010-81060	BOLT	4	SN:B10001--
17	01643-31032	WASHER	4	SN:B10001--

Ref. H4200-04A2 Page 180110

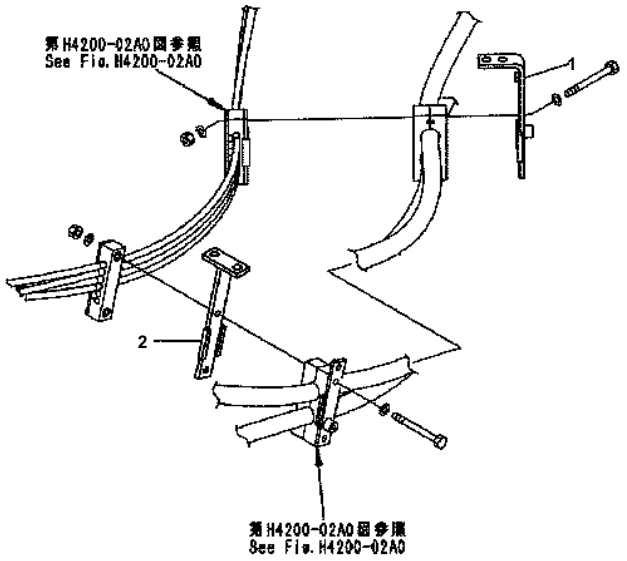

00000084

WA200-5 S/N B10001-UP

HYDRAULIC PIPING (PLATE)

Item	Part No.	Description	Qty	Options
1	417-62-33650	BRACKET	1	SN:B10001--
2	418-62-31551	BRACKET	1	SN:B10001--

Ref. H4200-05A0 Page 180120

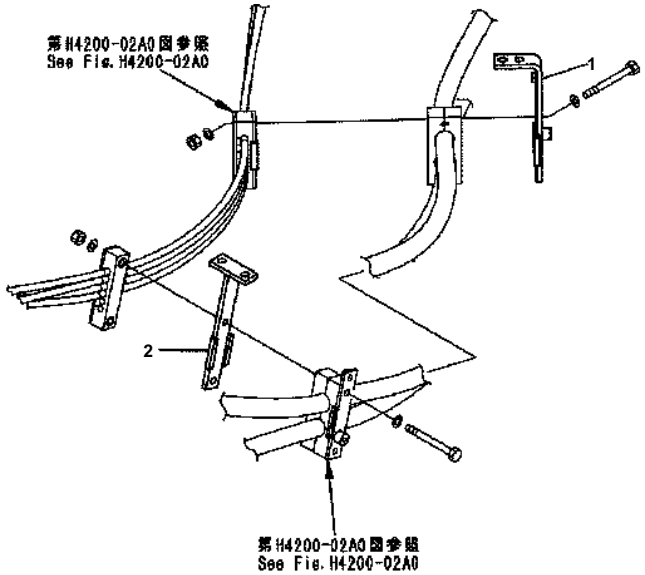

00000085

WA200-5 S/N B10001-UP

HYDRAULIC PIPING

Item	Part No.	Description	Qty	Options
1	418-62-31563	BRACKET	1	SN:B10001--
2	418-62-31551	BRACKET	1	SN:B10001--

Ref. H4200-05A6 Page 180130

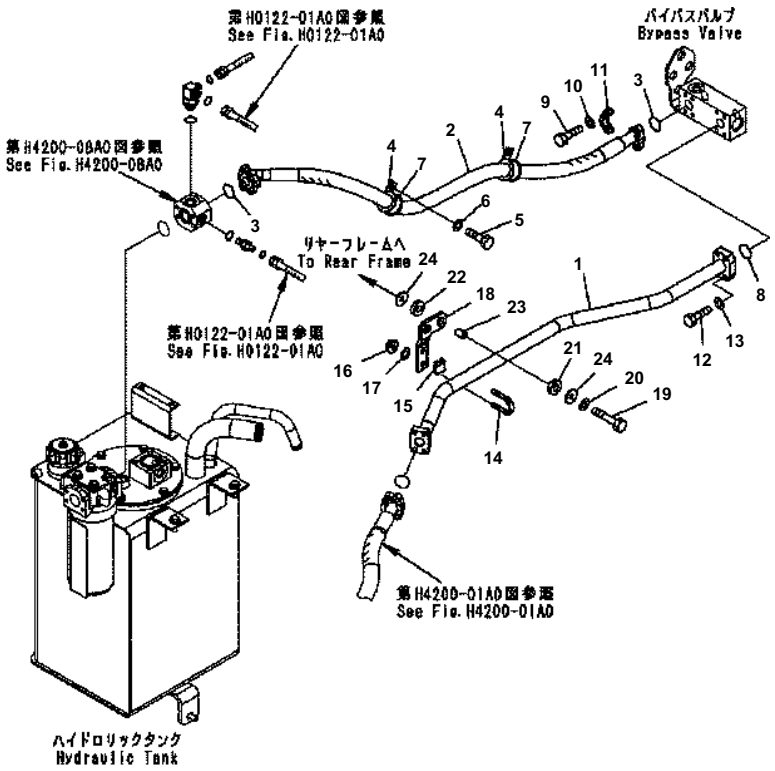

WA200-5 S/N B10001-UP

HYDRAULIC PIPING (RETURN LINE)

Item	Part No.	Description	Qty	Options
1	417-62-31344	TUBE	1	SN:B10001--
2	417-62-31480	HOSE	1	SN:B10001--
3	07000-13032	O-RING	2	SN:B10001--
4	419-09-11150	CLIP	2	SN:B10001--
5	01010-81020	BOLT	2	SN:B10001--
6	01643-31032	WASHER	2	SN:B10001--
7	418-62-32180	RUBBER	2	SN:B10001--
8	07000-13038	O-RING	1	SN:B10001--
9	07372-21035	BOLT	8	SN:B10001--
10	01643-51032	WASHER	8	SN:B10001--
11	07371-31049	FLANGE	4	SN:B10001--
12	07372-21040	BOLT	4	SN:B10001--
13	01643-51032	WASHER	4	SN:B10001--
14	07283-33450	CLIP	1	SN:B10001--
15	07283-53444	SEAT	1	SN:B10001--
16	01597-01009	NUT	2	SN:B10001--
17	01643-31032	WASHER	2	SN:B10001--
18	417-62-31161	PLATE	1	SN:B10001--
19	01010-81255	BOLT	2	SN:B10001--
20	01643-31232	WASHER	2	SN:B10001--
21	417-62-31170	CUSHION	2	SN:B10001--
22	417-62-31180	CUSHION	2	SN:B10001--
23	417-62-14130	SPACER	2	SN:B10001--
24	419-43-17920	WASHER	4	SN:B10001--

Ref. H4200-06A0 Page 180140

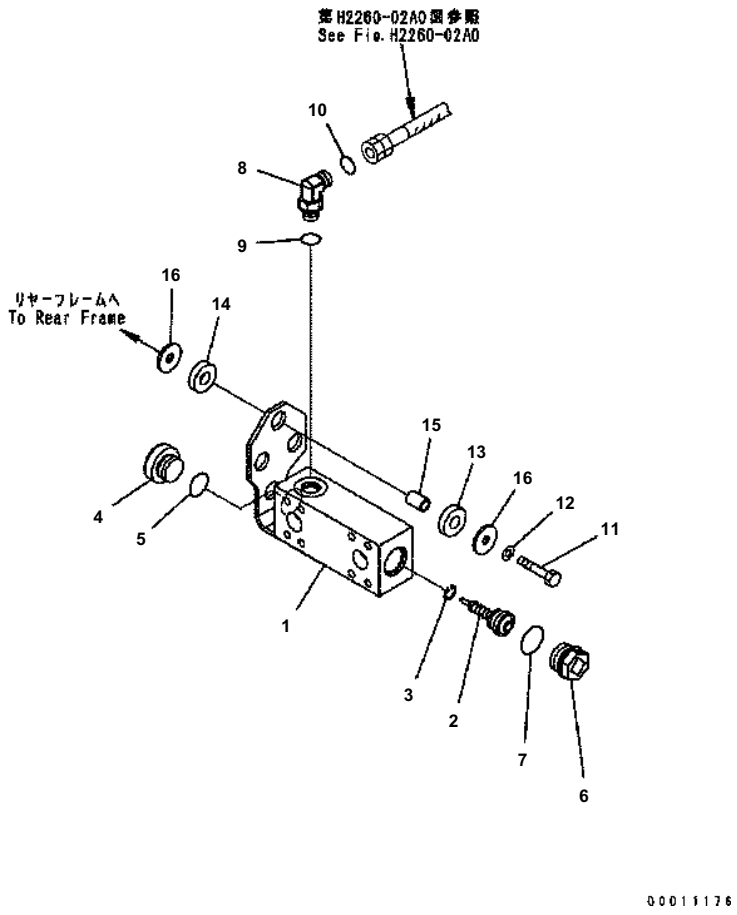

WA200-5 S/N B10001-UP

HYDRAULIC PIPING (VALVE)

Item	Part No.	Description	Qty	Options
1	417-62-31790	BLOCK	1	SN:B10001--
2	418-62-31611	VALVE ASS'Y	1	SN:B10001--
3	04065-03212	RING	1	SN:B10001--
4	07040-13316	PLUG	1	SN:B10001--
5	07002-13334	O-RING	1	SN:B10001--
6	07041-13612	PLUG	1	SN:B10001--
7	07002-13634	O-RING	1	SN:B10001--
8	02782-10422	ELBOW	1	SN:B10001--
9	07002-12034	O-RING	1	SN:B10001--
10	02896-11012	O-RING	1	SN:B10001--
11	01010-81050	BOLT	3	SN:B10001--
12	01643-31032	WASHER	3	SN:B10001--
13	417-62-31170	CUSHION	3	SN:B10001--
14	417-62-31180	CUSHION	3	SN:B10001--
15	417-62-14130	SPACER	3	SN:B10001--
16	415-64-13120	WASHER	6	SN:B10001--

Ref. H4200-07A0 Page 180150

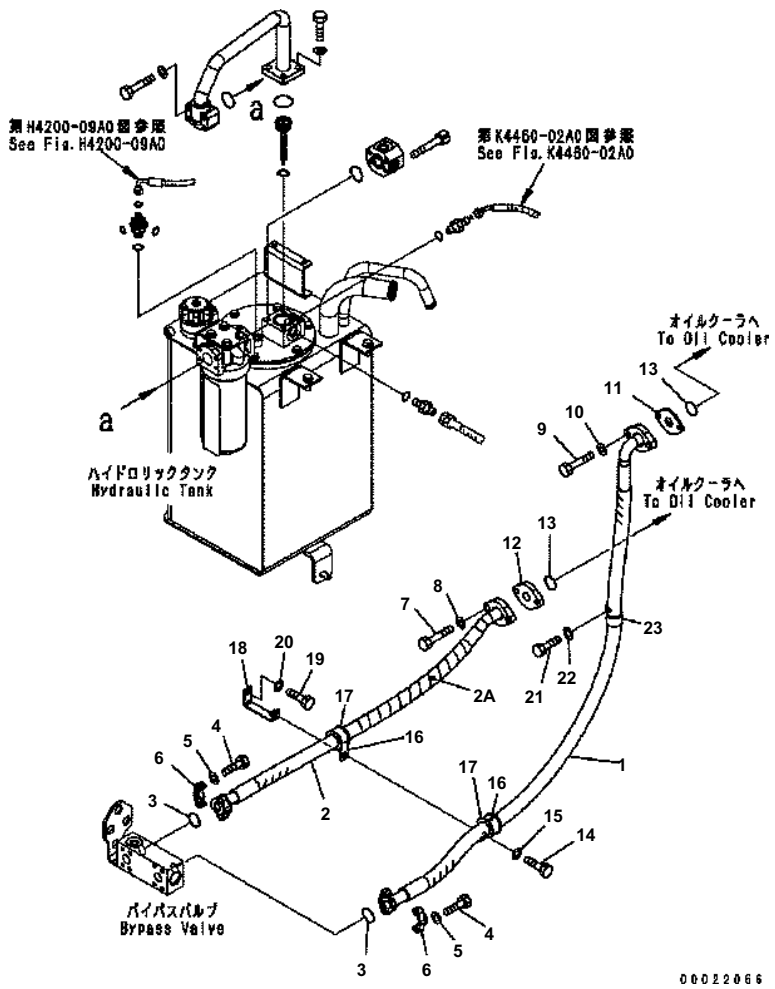

WA200-5 S/N B10001-UP

HYDRAULIC PIPING (RETURN LINE) (OIL COOLER)

Item	Part No.	Description	Qty	Options
1	417-62-31680	HOSE	1	SN:B10001--
2	417-62-31690	HOSE	1	SN:B10001--
2A	08210-02904	・ SPIRAL TUBE	1	SN:B10001--
3	07000-13032	O-RING	4	SN:B10001--
4	07372-21035	BOLT	8	SN:B10001--
5	01643-51032	WASHER	8	SN:B10001--
6	07371-31049	FLANGE	4	SN:B10001--
7	01010-81055	BOLT	2	SN:B10001--
8	01643-31032	WASHER	2	SN:B10001--
9	01010-81045	BOLT	2	SN:B10001--
10	01643-31032	WASHER	2	SN:B10001--
11	418-62-33550	FLANGE	1	SN:B10001--
12	417-62-33520	FLANGE	1	SN:B10001--
13	07000-13035	O-RING	2	SN:B10001--
14	01010-81030	BOLT	1	SN:B10001--
15	01643-31032	WASHER	1	SN:B10001--
16	419-09-11150	CLIP	2	SN:B10001--
17	418-62-32180	RUBBER	2	SN:B10001--
18	417-62-31710	BRACKET	1	SN:B10001--
19	01010-81020	BOLT	1	SN:B10001--
20	01643-31032	WASHER	1	SN:B10001--
21	01010-81020	BOLT	1	SN:B10001--
22	01643-31032	WASHER	1	SN:B10001--
23	281-01-13180	CLIP	1	SN:B10001--

Ref. H4200-08A0 Page 180160

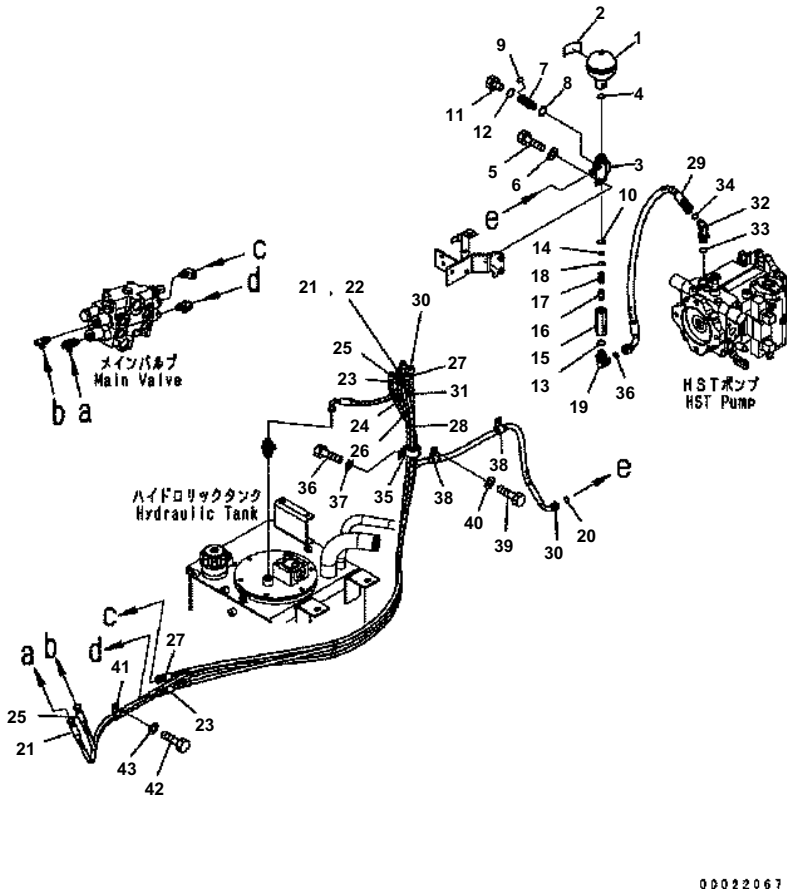

WA200-5 S/N B10001-UP

HYDRAULIC PIPING (ACCUMULATOR)

Item	Part No.	Description	Qty	Options
1	20Y-60-11410	ACCUMULATOR	1	SN:B10001--
2	09659-A057B	PLATE¤ SAFETY	1	SN:B10001--
3	418-62-34232	TEE	1	SN:B10001--
4	07002-12034	O-RING	1	SN:B10001--
5	01010-81025	BOLT	2	SN:B10001--
6	01643-31032	WASHER	2	SN:B10001--
7	02782-50210	ELBOW	1	SN:B10001--
8	07002-11423	O-RING	1	SN:B10001--
9	02896-11008	O-RING	1	SN:B10001--
10	07002-12034	O-RING	1	SN:B10001--
11	07040-11007	PLUG	1	SN:B10001--
12	07002-11023	O-RING	1	SN:B10001--
	418-62-31491	VALVE ASS'Y	1	SN:B10001--
13	07002-12034	・ O-RING	1	SN:B10001--
	205-60-64300	・ CHECK VALVE ASS'Y	1	SN:B10001--
14	04065-01410	・・ RING	1	SN:B10001--
15	205-60-64290	・・ BODY	1	SN:B10001--
16	205-60-51390	・・ POPPET	1	SN:B10001--
17	205-60-51410	・・ SPRING	1	SN:B10001--
18	205-60-51420	・・ SEAT	1	SN:B10001--
19	02782-10422	・ ELBOW	1	SN:B10001--
20	02896-11009	O-RING	1	SN:B10001--
21	417-62-34113	HOSE {YELLOW}	1	SN:B10001--
	21U-62-34710	・ BAND¤ YELLOW	2	SN:B10001--
22	08210-01207	・ SPIRAL TUBE	1	SN:B10001--
23	417-62-34122	HOSE {ORANGE}	1	SN:B10001--
	21U-62-34740	・ BAND¤ ORANGE	2	SN:B10001--
24	08210-01207	・ SPIRAL TUBE	1	SN:B10001--
25	417-62-34133	HOSE {RED}	1	SN:B10001--
	21U-62-34760	・ BAND¤ RED	2	SN:B10001--
26	08210-01207	・ SPIRAL TUBE	1	SN:B10001--
27	417-62-34143	HOSE {BLUE}	1	SN:B10001--
	21U-62-34750	・ BAND¤ BLUE	2	SN:B10001--
28	08210-01207	・ SPIRAL TUBE	1	SN:B10001--
29	02763-004A7	HOSE	1	SN:B10001--
30	417-62-34211	HOSE {BLUE-BLACK}	1	SN:B10001--
	21U-62-34750	・ BAND¤ BLUE	2	SN:B10001--
	21U-62-34760	・ BAND¤ RED	2	SN:B10001--
31	08210-01205	・ SPIRAL TUBE	1	SN:B10001--
32	418-62-35130	ELBOW	1	SN:B10001--

Ref. H4200-09A0 Page 180170

WA200-5 S/N B10001-UP

HYDRAULIC PIPING (ACCUMULATOR)

Item	Part No.	Description	Qty	Options
33	07000-12018	O-RING	1	SN:B10001--
34	02896-11012	O-RING	2	SN:B10001--
35	419-09-11150	CLIP	1	SN:B10001--
36	01010-81025	BOLT	1	SN:B10001--
37	01643-31032	WASHER	1	SN:B10001--
38	04434-51610	CLIP	2	SN:B10001--
39	01010-81025	BOLT	2	SN:B10001--
40	01643-31032	WASHER	2	SN:B10001--
41	04435-51510	CLIP	1	SN:B10001--
42	01010-81020	BOLT	1	SN:B10001--
43	01643-31032	WASHER	1	SN:B10001--

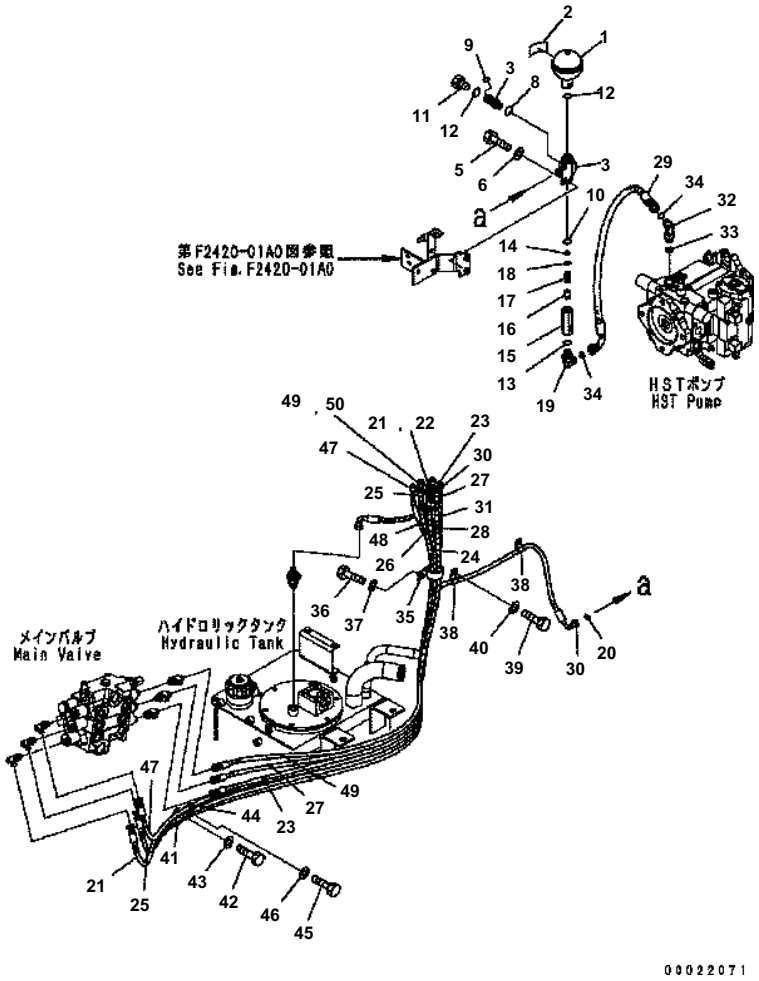

WA200-5 S/N B10001-UP

HYDRAULIC PIPING (ACCUMULATOR) (FOR 3-SPOOL VALVE)

Item	Part No.	Description	Qty	Options
1	20Y-60-11410	ACCUMULATOR	1	SN:B10001--
2	09659-A057B	PLATE¤ SAFETY	1	SN:B10001--
3	418-62-34232	TEE	1	SN:B10001--
4	07002-12034	O-RING	1	SN:B10001--
5	01010-81025	BOLT	2	SN:B10001--
6	01643-31032	WASHER	2	SN:B10001--
7	02782-50210	ELBOW	1	SN:B10001--
8	07002-11423	O-RING	1	SN:B10001--
9	02896-11008	O-RING	1	SN:B10001--
10	07002-12034	O-RING	1	SN:B10001--
11	07040-11007	PLUG	1	SN:B10001--
12	07002-11023	O-RING	1	SN:B10001--
	418-62-31491	VALVE ASS'Y	1	SN:B10001--
13	07002-12034	· O-RING	1	SN:B10001--
	205-60-64300	· CHECK VALVE ASS'Y	1	SN:B10001--
14	04065-01410	· · RING	1	SN:B10001--
15	205-60-64290	· · BODY	1	SN:B10001--
16	205-60-51390	· · POPPET	1	SN:B10001--
17	205-60-51410	· · SPRING	1	SN:B10001--
18	205-60-51420	· · SEAT	1	SN:B10001--
19	02782-10422	· ELBOW	1	SN:B10001--
20	02896-11009	O-RING	1	SN:B10001--
21	417-62-34113	HOSE {YELLOW}	1	SN:B10001--
	21U-62-34710	· BAND¤ YELLOW	2	SN:B10001--
22	08210-01207	· SPIRAL TUBE	1	SN:B10001--
23	417-62-34122	HOSE {ORANGE}	1	SN:B10001--
	21U-62-34740	· BAND¤ ORANGE	2	SN:B10001--
24	08210-01207	· SPIRAL TUBE	1	SN:B10001--
25	417-62-34133	HOSE{RED}	1	SN:B10001--
	21U-62-34760	· BAND¤ RED	2	SN:B10001--
26	08210-01207	· SPIRAL TUBE	1	SN:B10001--
27	417-62-34143	HOSE {BLUE}	1	SN:B10001--
	21U-62-34750	· BAND¤ BLUE	2	SN:B10001--
28	08210-01207	· SPIRAL TUBE	1	SN:B10001--
29	02763-004A7	HOSE	1	SN:B10001--
30	417-62-34211	HOSE{BLUE-BLACK}	1	SN:B10001--
	21U-62-34750	· BAND¤ BLUE	2	SN:B10001--
	21U-62-34760	· BAND¤ RED	2	SN:B10001--
31	08210-01205	· SPIRAL TUBE	1	SN:B10001--

Ref. H4200-09A2 Page 180180

WA200-5 S/N B10001-UP

HYDRAULIC PIPING (ACCUMULATOR) (FOR 3-SPOOL VALVE)

Item	Part No.	Description	Qty	Options
32	418-62-35130	ELBOW	1	SN:B10001--
33	07000-12018	O-RING	1	SN:B10001--
34	02896-11012	O-RING	2	SN:B10001--
35	419-09-11150	CLIP	1	SN:B10001--
36	01010-81025	BOLT	1	SN:B10001--
37	01643-31032	WASHER	1	SN:B10001--
38	04434-51610	CLIP	2	SN:B10001--
39	01010-81025	BOLT	2	SN:B10001--
40	01643-31032	WASHER	2	SN:B10001--
41	04435-51510	CLIP	1	SN:B10001--
42	01010-81020	BOLT	1	SN:B10001--
43	01643-31032	WASHER	1	SN:B10001--
44	04435-51210	CLIP	1	SN:B10001--
45	01010-81020	BOLT	1	SN:B10001--
46	01643-31032	WASHER	1	SN:B10001--
47	417-877-3361	HOSE {GREEN}	1	SN:B10001--
	21U-62-34730	· BAND¤ GREEN	2	SN:B10001--
48	08210-01207	· SPIRAL TUBE	1	SN:B10001--
49	417-877-3351	HOSE {WHITE}	1	SN:B10001--
	21U-62-34730	· BAND¤ GREEN	2	SN:B10001--
50	08210-01207	· SPIRAL TUBE	1	SN:B10001--

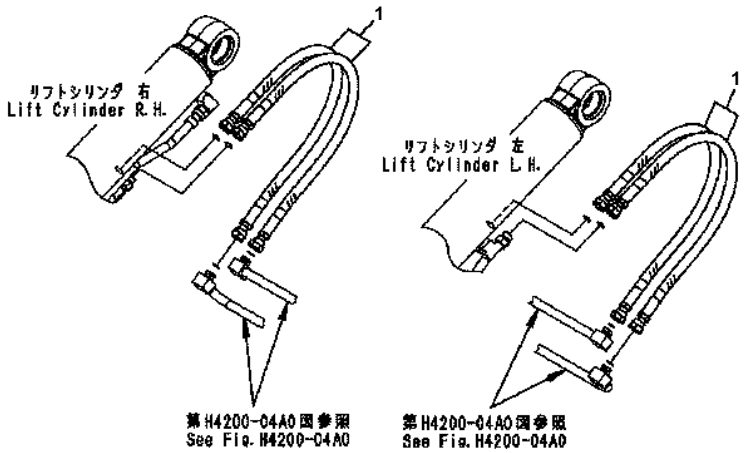

00015294

WA200-5 S/N B10001-UP

HYDRAULIC PIPING (LIFT CYLINDER HOSE)

Item	Part No.	Description	Qty	Options
1	02753-00510	HOSE	4	SN:B10001--

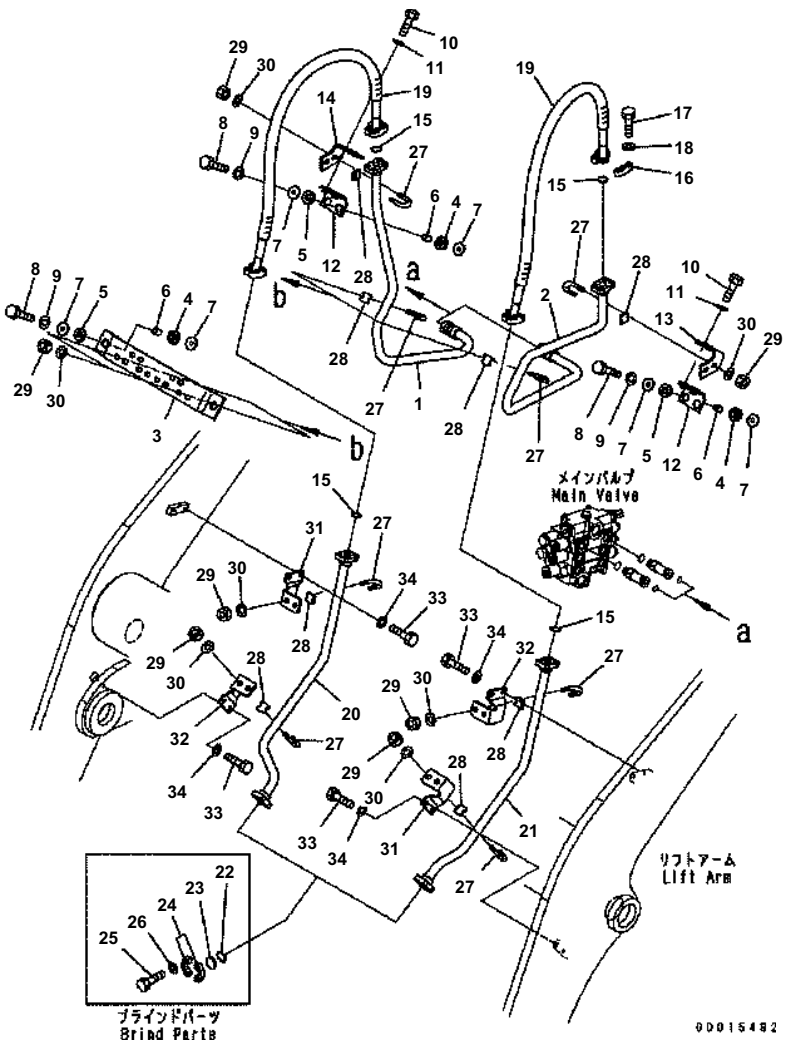

WA200-5 S/N B10001-UP

HYDRAULIC PIPING (PIPING)

Item	Part No.	Description	Qty	Options
1	417-877-3323	TUBE {R.H.}	1	SN:B10001--
2	417-877-3313	TUBE {L.H.}	1	SN:B10001--
3	417-V89-3190	BRACKET	1	SN:B10001--
4	419-43-17930	CUSHION	6	SN:B10001--
5	415-64-13130	CUSHION	6	SN:B10001--
6	417-54-13470	SPACER	6	SN:B10001--
7	415-64-13120	WASHER	12	SN:B10001--
8	01010-81050	BOLT	6	SN:B10001--
9	01643-31032	WASHER	6	SN:B10001--
10	01010-81030	BOLT	4	SN:B10001--
11	01643-31032	WASHER	4	SN:B10001--
12	417-V89-3211	BRACKET	2	SN:B10001--
13	417-877-3510	BRACKET	1	SN:B10001--
14	417-877-3520	BRACKET	1	SN:B10001--
15	07000-13025	O-RING	4	SN:B10001--
16	07371-30640	FLANGE	8	SN:B10001--
17	07372-21035	BOLT	16	SN:B10001--
18	01643-51032	WASHER	16	SN:B10001--
19	07125-00613	HOSE	2	SN:B10001--
20	417-877-3341	TUBE {R.H.}	1	SN:B10001--
21	417-877-3331	TUBE {L.H.}	1	SN:B10001--
22	07000-13025	O-RING	2	SN:B10001--
23	07378-10600	HEAD	2	SN:B10001--
24	07371-30640	FLANGE	4	SN:B10001--
25	07372-21035	BOLT	8	SN:B10001--
26	01643-51032	WASHER	8	SN:B10001--
27	07283-32746	CLIP	8	SN:B10001--
28	07283-52737	SEAT	8	SN:B10001--
29	01597-01009	NUT	16	SN:B10001--
30	01643-31032	WASHER	16	SN:B10001--
31	417-877-3630	BRACKET {L.H.}	2	SN:B10001--
32	417-877-3640	BRACKET {R.H.}	2	SN:B10001--
33	01010-81020	BOLT	8	SN:B10001--
34	01643-31032	WASHER	8	SN:B10001--

Ref. H4200-13A2 Page 180200

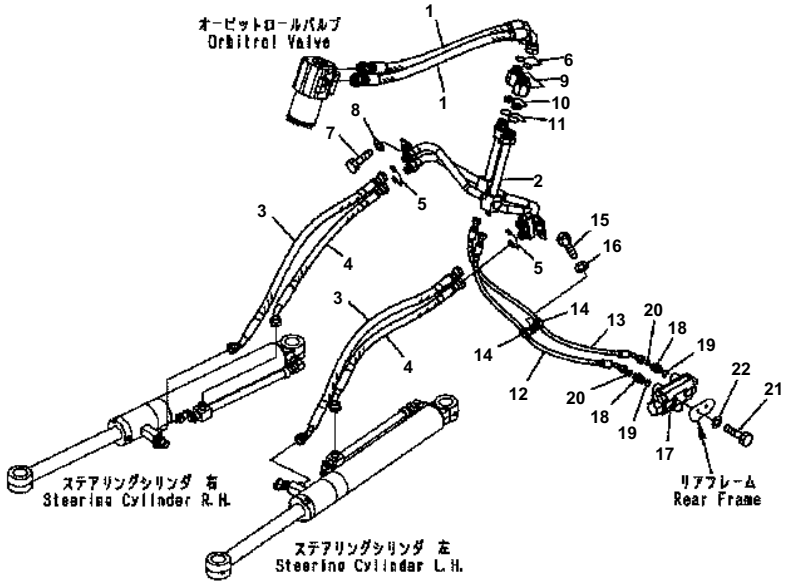

WA200-5 S/N B10001-UP

STEERING LINE

Item	Part No.	Description	Qty	Options
1	02766-B04A6	HOSE	2	SN:B10001--
2	417-62-31910	TUBE	1	SN:65004--
3	417-62-31351	HOSE	2	SN:B10001--
4	417-62-31361	HOSE	2	SN:B10001--
5	02896-11012	O-RING	4	SN:B10001--
6	02896-11012	O-RING	2	SN:B10001--
7	01010-81030	BOLT	2	SN:B10001--
8	01643-31032	WASHER	2	SN:B10001--
9	417-62-31130	BODY	2	SN:B10001--
10	418-62-21280	POPPET	2	SN:B10001--
11	07002-13034	O-RING	2	SN:B10001--
12	02766-00207	HOSE	1	SN:B10001--
13	02766-00208	HOSE¤ 800MM	1	SN:B10001--
14	04434-51310	CLIP	2	SN:B10001--
15	01010-81020	BOLT	1	SN:B10001--
16	01643-31032	WASHER	1	SN:B10001--
17	(418-64-25400)	VALVE ASS'Y {CUSHION}	1	SN:B10001--
18	421-62-31110	UNION	2	SN:B10001--
19	07000-12014	O-RING	2	SN:B10001--
20	02896-11008	O-RING	4	SN:B10001--
21	01010-80820	BOLT	2	SN:B10001--
22	01643-30823	WASHER	2	SN:B10001--

Ref. H4410-01A0 Page 180210

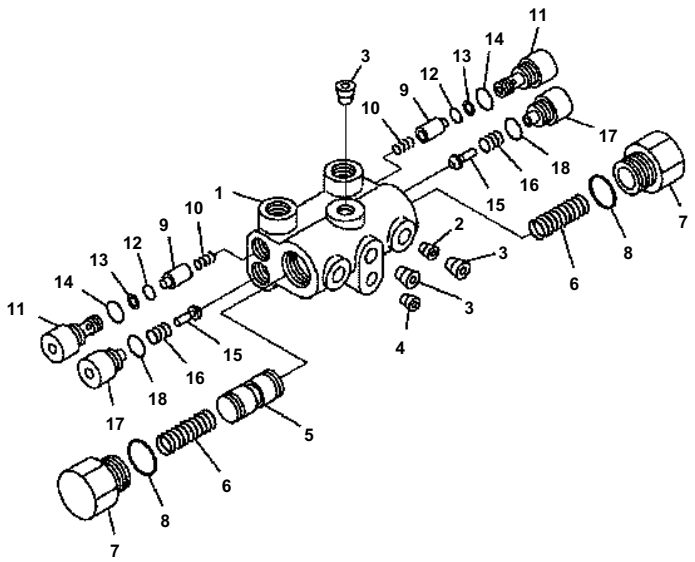

WA200-5 S/N B10001-UP

STEERING LINE (CUSHION VALVE)

Item	Part No.	Description	Qty	Options
	418-64-25400	VALVE ASS'Y	1	SN:B10001--
1	418-64-15820	· HOUSING	1	SN:B10001--
2	418-64-25410	· ORIFICE	2	SN:B10001--
3	418-64-15910	· PLUG	4	SN:B10001--
4	418-64-15950	· PLUG	1	SN:B10001--
5	418-64-15890	· SPOOL	1	SN:B10001--
6	418-64-15880	· SPRING	2	SN:B10001--
7	418-64-15870	· PLUG	2	SN:B10001--
8	☆	· O-RING (KIT)	2	SN:B10001--
9	418-64-15830	· POPPET	2	SN:B10001--
10	418-64-15840	· SPRING	2	SN:B10001--
11	418-64-15850	· VALVE	2	SN:B10001--
12	☆	· O-RING (KIT)	2	SN:B10001--
13	☆	· RING {BACK-UP} (KIT)	2	SN:B10001--
14	☆	· O-RING (KIT)	2	SN:B10001--
15	418-64-15940	· POPPET	2	SN:B10001--
16	418-64-15930	· SPRING	2	SN:B10001--
17	418-64-15920	· PLUG	2	SN:B10001--
18	☆	· O-RING (KIT)	2	SN:B10001--
		SERVICE KIT	1	SN:B10001--
K	418-64-15810	· SEAL KIT	1	SN:B10001--

Ref. H4410-51A0 Page 180220

MAIN FRAME AND RELATED PARTS

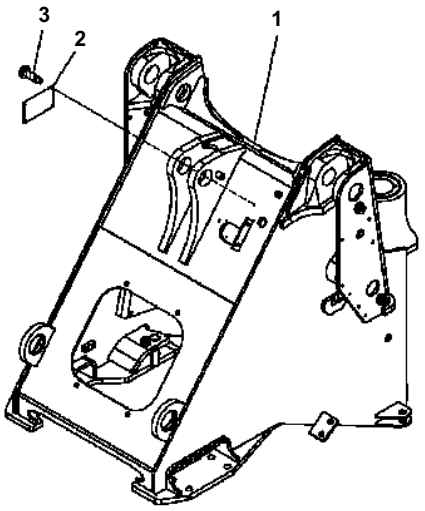

00D10548

WA200-5 S/N B10001-UP

FRONT FRAME (EXCEPT JAPAN) (#B10001-B10134)

Item	Part No.	Description	Qty	Options
1	417-46-31201	SEAT ASS'Y {FRONT}	1	SN:B10078--B10134
	417-46-31200	SEAT ASS'Y {FRONT}	1	SN:B10001--B10077
2	(☆09602-10001)	PLATE¤ NAME	1	SN:B10001--B10134
3	04418-13060	SCREW	4	SN:B10001--B10134

Ref. J4110-01A1 Page 210010

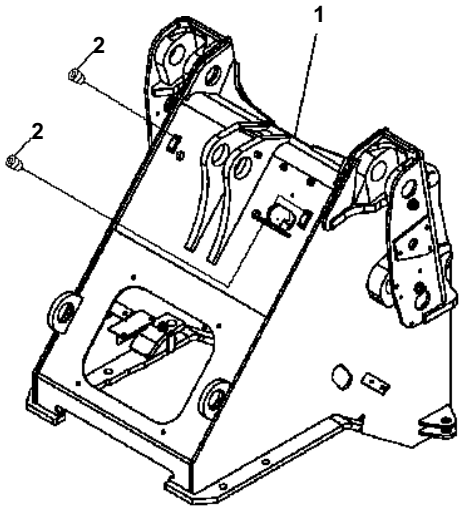

00007805

WA200-5 S/N B10001-UP

FRONT FRAME (EXCEPT JAPAN) (FOR 3-SPOOL VALVE OR FOR E.C.S.S) (#B10135-)

Item	Part No.	Description	Qty	Options
1	417-877-3391	FRAME {FRONT}	1	SN:B10135--
2	07049-01012	PLUG	4	SN:B10135--

Ref. J4110-01A2 Page 210020

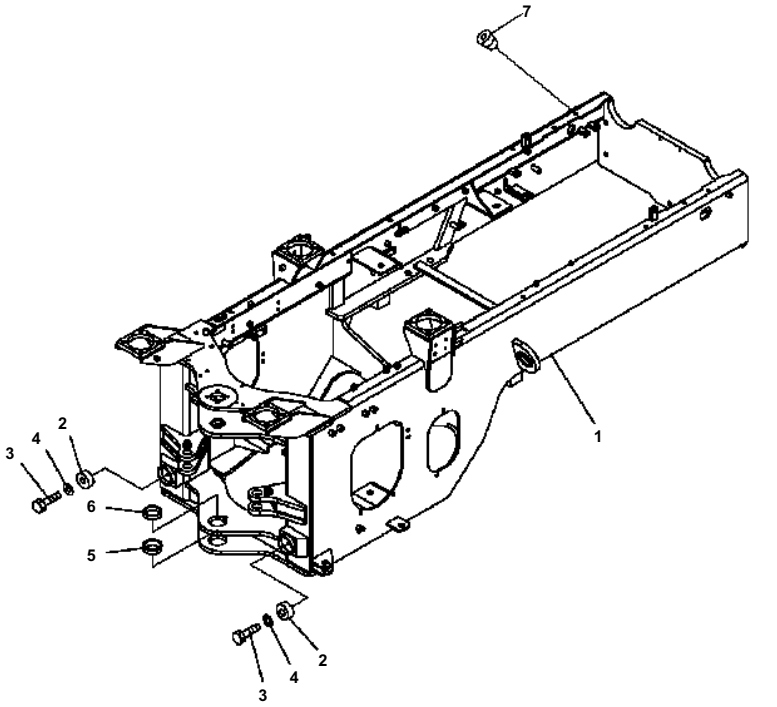

WA200-5 S/N B10001-UP

REAR FRAME

Item	Part No.	Description	Qty	Options
1	417-46-32104	FRAME ASS'Y {REAR FRAME}	1	SN:B10001--
2	416-46-11210	BUMPER	2	SN:B10001--
3	01010-81225	BOLT	2	SN:B10001--
4	01643-31232	WASHER	2	SN:B10001--
5	417-46-22210	BUSHING	1	SN:B10001--
6	417-46-22220	BUSHING	1	SN:B10001--
7	07049-01215	PLUG	4	SN:B10236--

Ref. J4120-01A0 Page 210030

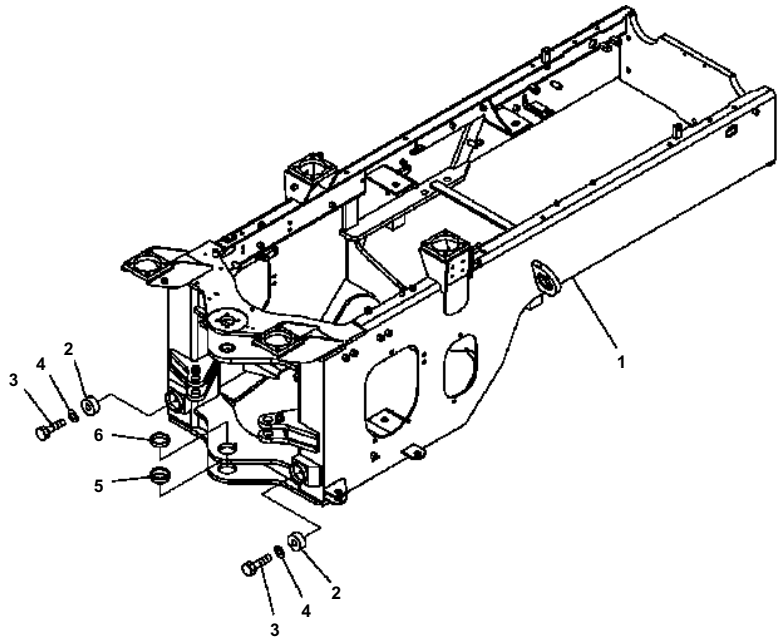

WA200-5 S/N B10001-UP

REAR FRAME (FOR ADDITIONAL COUNTER WEIGHT) (#B10001-B10152)

Item	Part No.	Description	Qty	Options
1	417-975-3212	FRAME ASS'Y {REAR FRAME}	1	SN:B10001--B10152
2	416-46-11210	BUMPER	2	SN:B10001--B10152
3	01010-81225	BOLT	2	SN:B10001--B10152
4	01643-31232	WASHER	2	SN:B10001--B10152
5	417-46-22210	BUSHING	1	SN:B10001--B10152
6	417-46-22220	BUSHING	1	SN:B10001--B10152

Ref. J4120-01A1 Page 210040

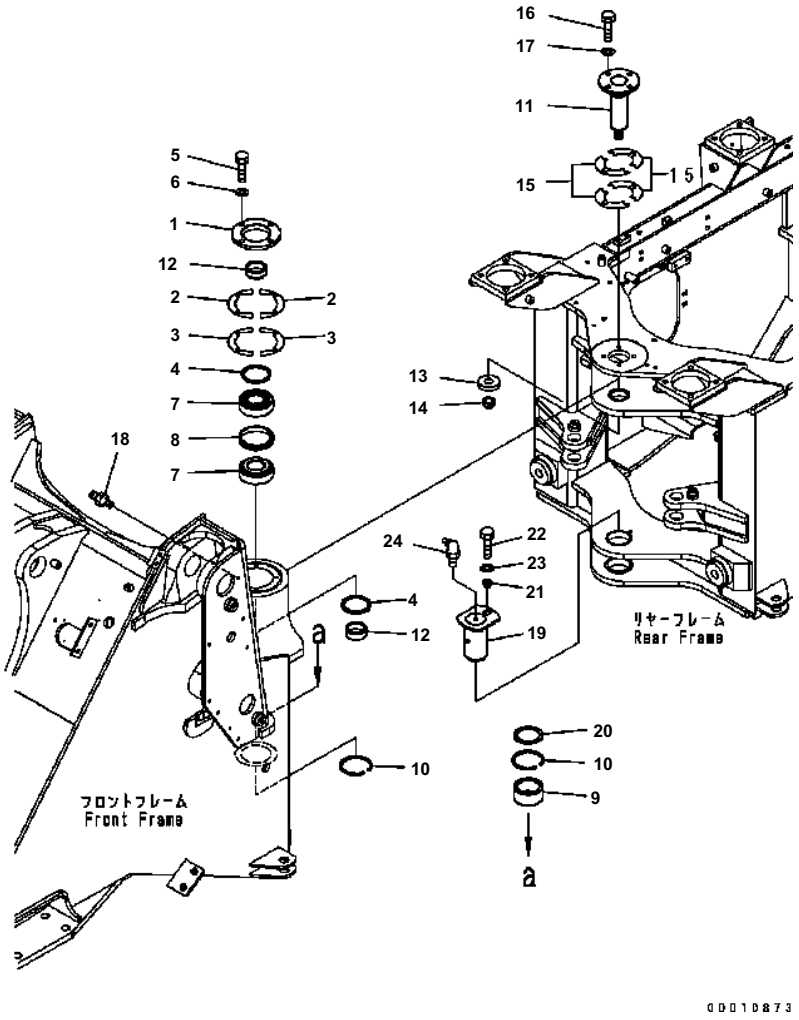

WA200-5 S/N B10001-UP

HINGE PIN

Item	Part No.	Description	Qty	Options
1	417-46-11220	RETAINER	1	SN:B10001--
2	417-46-11330	SHIM¤ 0.5MM	6	SN:B10001--
3	417-46-11340	SHIM¤ 0.1MM	6	SN:B10001--
4	417-46-11230	SEAL {DUST}	2	SN:B10001--
5	01010-81030	BOLT	4	SN:B10001--
6	01643-31032	WASHER	4	SN:B10001--
7	417-46-11120	BEARING	2	SN:B10001--
8	417-46-11210	SPACER	1	SN:B10001--
9	417-46-33110	BEARING	1	SN:B10001--
10	417-46-11260	RING	2	SN:B10001--
11	417-46-11151	PIN	1	SN:B10001--
12	417-46-11180	SPACER	2	SN:B10001--
13	417-46-11160	WASHER	1	SN:B10001--
14	01597-02419	NUT	1	SN:B10001--
15	417-46-11190	SHIM¤ 0.4MM	10	SN:B10001--
16	01010-81230	BOLT	4	SN:B10001--
17	01643-31232	WASHER	4	SN:B10001--
18	07020-00000	FITTING	1	SN:B10001--
19	417-46-11240	PIN	1	SN:B10001--
20	417-46-11270	WASHER	1	SN:B10001--
21	424-46-11130	BUSHING	1	SN:B10001--
22	01010-81230	BOLT	1	SN:B10001--
23	01643-31232	WASHER	1	SN:B10001--
24	07020-00900	FITTING	1	SN:B10001--

Ref. J4130-01A0 Page 210050

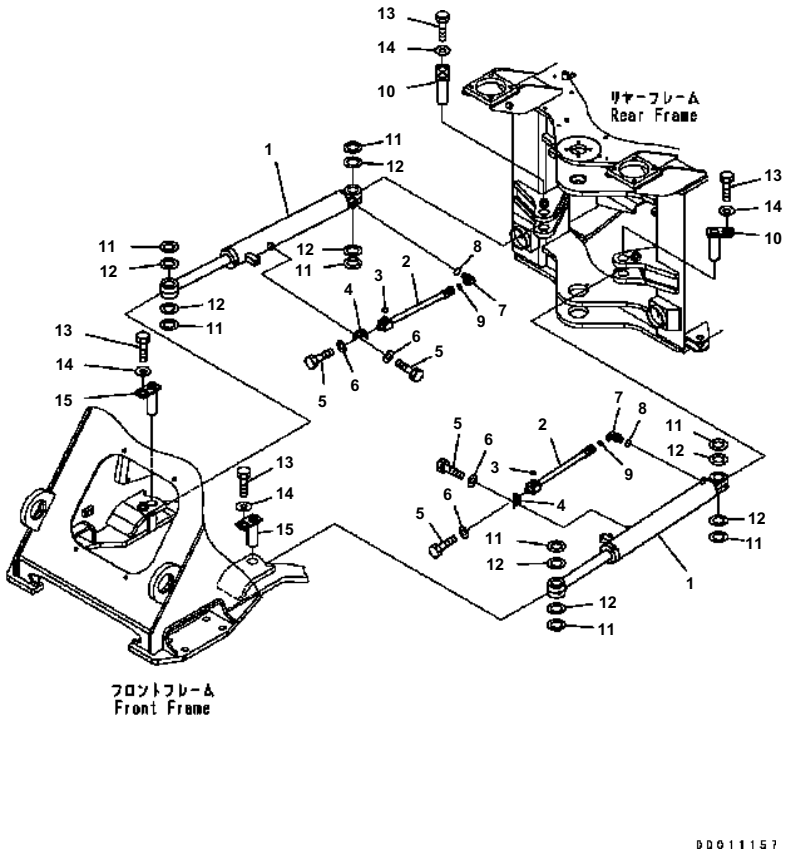

WA200-5 S/N B10001-UP

STEERING CYLINDER

Item	Part No.	Description	Qty	Options
1	(707-00-07H80)	CYLINDER ASS'Y	2	SN:B10001--
2	418-46-34210	TUBE	2	SN:B10001--
3	02896-11012	O-RING	2	SN:B10001--
4	418-46-34220	PLATE	2	SN:B10001--
5	01010-81016	BOLT	4	SN:B10001--
6	01643-31032	WASHER	4	SN:B10001--
7	02782-10422	ELBOW	2	SN:B10001--
8	07002-12034	O-RING	2	SN:B10001--
9	02896-11012	O-RING	2	SN:B10001--
10	419-46-12260	PIN	2	SN:B10001--
11	419-46-12280	SHIM¤ 1.0MM	18	SN:B10001--
12	419-46-12290	SHIM¤ 0.5MM	10	SN:B10001--
13	01010-81220	BOLT	4	SN:B10001--
14	175-54-34170	WASHER	4	SN:B10001--
15	417-46-32260	PIN	2	SN:B10001--

Ref. J4140-01A0 Page 210060

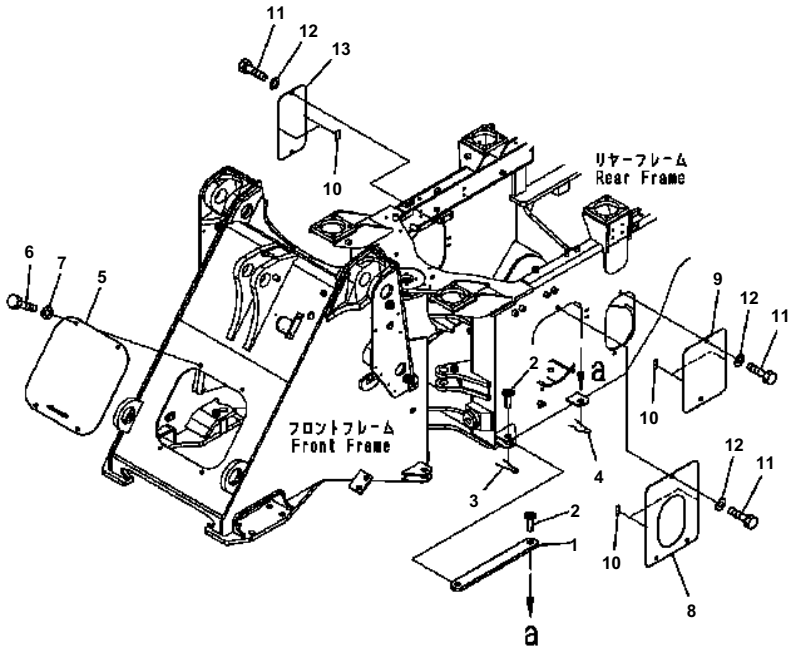

WA200-5 S/N B10001-UP

BAR LOCK AND COVER

Item	Part No.	Description	Qty	Options
1	417-46-24110	BAR	1	SN:B10001--
2	416-46-12230	PIN	2	SN:B10001--
3	04050-18055	PIN	1	SN:B10001--
4	415-46-11360	PIN {SNAP}	1	SN:B10001--
5	417-46-31330	COVER	1	SN:B10001--
6	01010-81230	BOLT	4	SN:B10001--
7	01643-31232	WASHER	4	SN:B10001--
8	417-46-34410	COVER {L.H.}	1	SN:B10001--
9	417-46-34440	COVER {L.H}	1	SN:B10135--
	417-46-34420	COVER {L.H.}	1	SN:B10001--B10134
10	421-09-21420	SHEET	6	SN:B10001--
11	01010-81225	BOLT	7	SN:B10001--
12	01643-31232	WASHER	7	SN:B10001--
13	417-46-34431	COVER {R.H.}	1	SN:B10001--

Ref. J4190-01A0 Page 210070

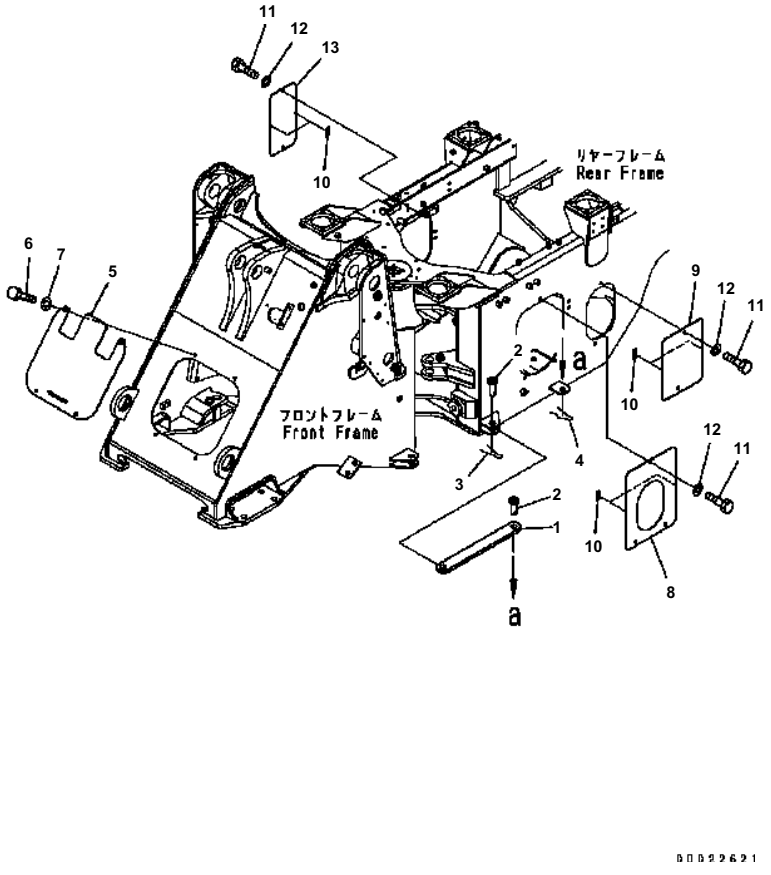

WA200-5 S/N B10001-UP

BAR LOCK AND COVER (FOR 3-SPOOL VALVE)

Item	Part No.	Description	Qty	Options
1	417-46-24110	BAR	1	SN:B10001--
2	416-46-12230	PIN	2	SN:B10001--
3	04050-18055	PIN {COTTER}	1	SN:B10001--
4	415-46-11360	PIN {SNAP}	1	SN:B10001--
5	417-V88-3210	COVER	1	SN:B10001--
6	01010-81230	BOLT	4	SN:B10001--
7	01643-31232	WASHER	4	SN:B10001--
8	417-46-34410	COVER {L.H.}	1	SN:B10001--
9	417-46-34440	COVER {L.H.}	1	SN:B10135--
	417-46-34420	COVER {L.H.}	1	SN:B10001--B10134
10	421-09-21420	SHEET	6	SN:B10001--
11	01010-81225	BOLT	7	SN:B10001--
12	01643-31232	WASHER	7	SN:B10001--
13	417-46-34431	COVER {R.H.}	1	SN:B10001--

Ref. J4190-01A4 Page 210080

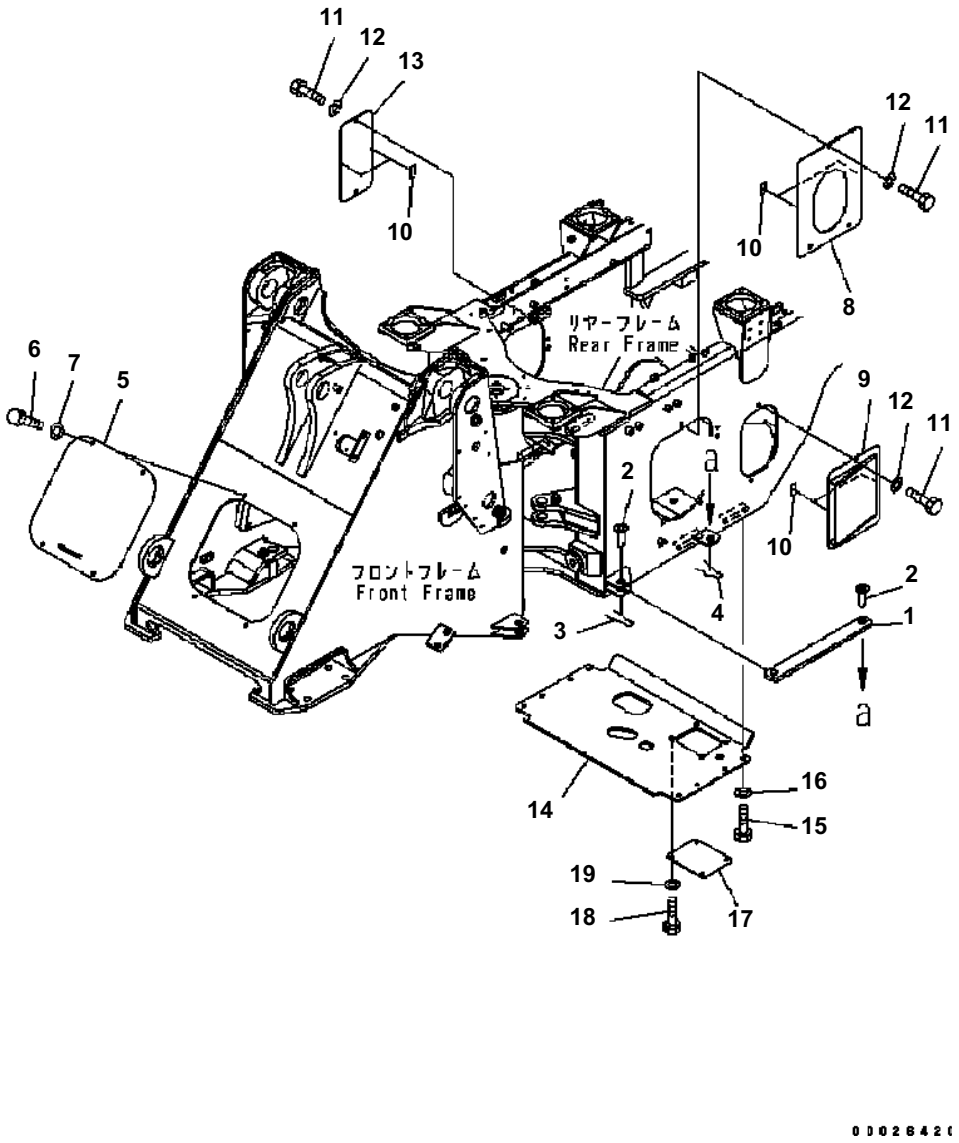

BAR LOCK AND COVER (FOR POWER TRAIN GUARD)

Item	Part No.	Description	Qty	Options
1	417-46-24110	BAR	1	SN:B10001--
2	416-46-12230	PIN	2	SN:B10001--
3	04050-18055	PIN {COTTER}	1	SN:B10001--
4	415-46-11360	PIN {SNAP}	1	SN:B10001--
5	417-46-31330	COVER	1	SN:B10001--
6	01010-81230	BOLT	4	SN:B10001--
7	01643-31232	WASHER	4	SN:B10001--
8	417-46-34410	COVER {L.H.}	1	SN:B10001--
9	417-46-34440	PLATE	1	SN:B10001--
10	421-09-21420	SHEET	6	SN:B10001--
11	01010-81225	BOLT	7	SN:B10001--
12	01643-31232	WASHER	7	SN:B10001--
13	417-46-34431	COVER {R.H.}	1	SN:B10001--
14	418-971-3110	GUARD	1	SN:B10001--
15	01010-81230	BOLT	8	SN:B10001--
16	01643-31232	WASHER	8	SN:B10001--
17	418-971-3120	PLATE	1	SN:B10001--
18	01010-81025	BOLT	4	SN:B10001--
19	01643-31032	WASHER	4	SN:B10001--

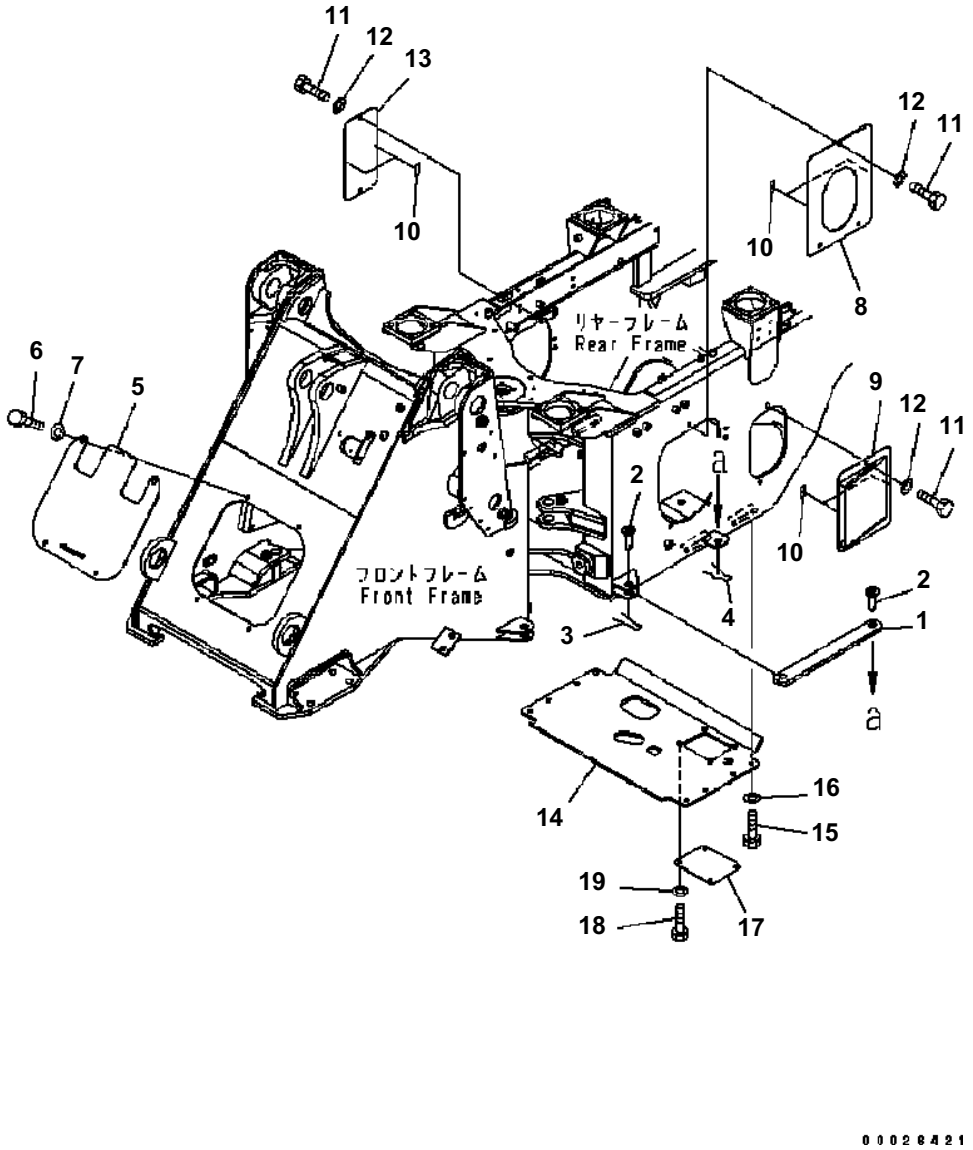

BAR LOCK AND COVER (FOR POWER TRAIN GUARD ¤ 3-SPOOL VALVE)

Item	Part No.	Description	Qty	Options
1	417-46-24110	BAR	1	SN:B10001--
2	416-46-12230	PIN	2	SN:B10001--
3	04050-18055	PIN {COTTER}	1	SN:B10001--
4	415-46-11360	PIN {SNAP}	1	SN:B10001--
5	417-V88-3210	COVER	1	SN:B10001--
6	01010-81225	BOLT	4	SN:B10001--
7	01643-31232	WASHER	4	SN:B10001--
8	417-46-34410	COVER {L.H.}	1	SN:B10001--
9	417-46-34440	PLATE	1	SN:B10001--
10	421-09-21420	SHEET	6	SN:B10001--
11	01010-81225	BOLT	7	SN:B10001--
12	01643-31232	WASHER	7	SN:B10001--
13	417-46-34431	COVER {R.H.}	1	SN:B10001--
14	418-971-3110	GUARD	1	SN:B10001--
15	01010-81230	BOLT	8	SN:B10001--
16	01643-31232	WASHER	8	SN:B10001--
17	418-971-3120	PLATE	1	SN:B10001--
18	01010-81025	BOLT	4	SN:B10001--
19	01643-31032	WASHER	4	SN:B10001--

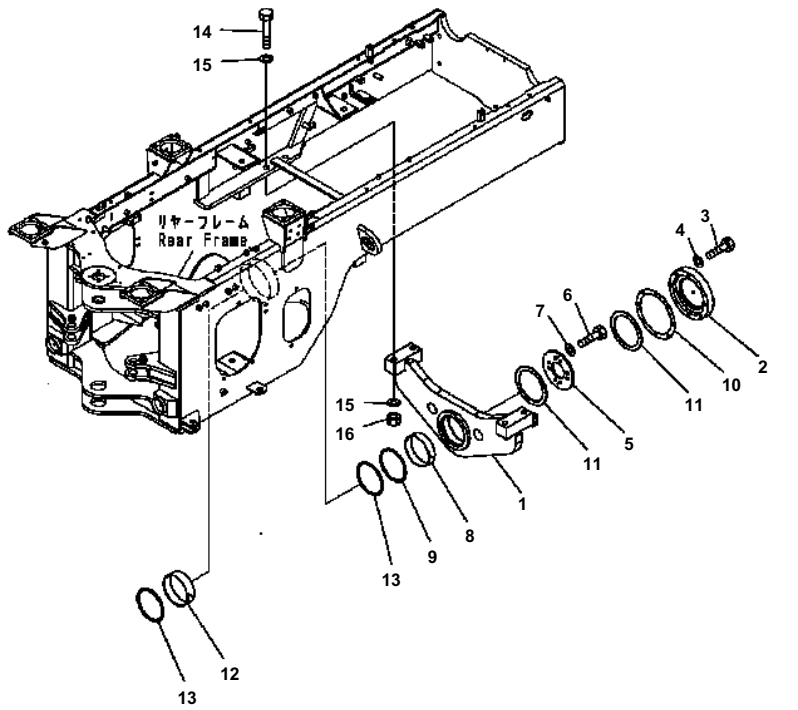

WA200-5 S/N B10001-UP

REAR AXLE SUPPORT

Item	Part No.	Description	Qty	Options
1	418-46-B7111	SUPPORT {REAR}	1	SN:B10001--
2	418-46-12131	COVER	1	SN:B10001--
3	01010-81265	BOLT	8	SN:B10001--
4	01643-31232	WASHER	8	SN:B10001--
5	418-46-12141	PLATE	1	SN:B10001--
6	01010-81250	BOLT	8	SN:B10001--
7	01643-31232	WASHER	8	SN:B10001--
8	418-46-37130	BUSHING	1	SN:B10001--
9	421-46-15132	PACKING	1	SN:B10001--
10	418-46-12160	SHIM¤ 0.2MM	3	SN:B10001--
11	418-46-17120	WASHER	2	SN:B10001--
12	418-46-37120	BUSHING	1	SN:B10001--
13	421-46-15132	PACKING	2	SN:B10001--
14	01011-62440	BOLT	4	SN:B10001--
15	01643-32460	WASHER	8	SN:B10001--
16	01580-02419	NUT	4	SN:B10001--

Ref. J4210-01A0 Page 210090

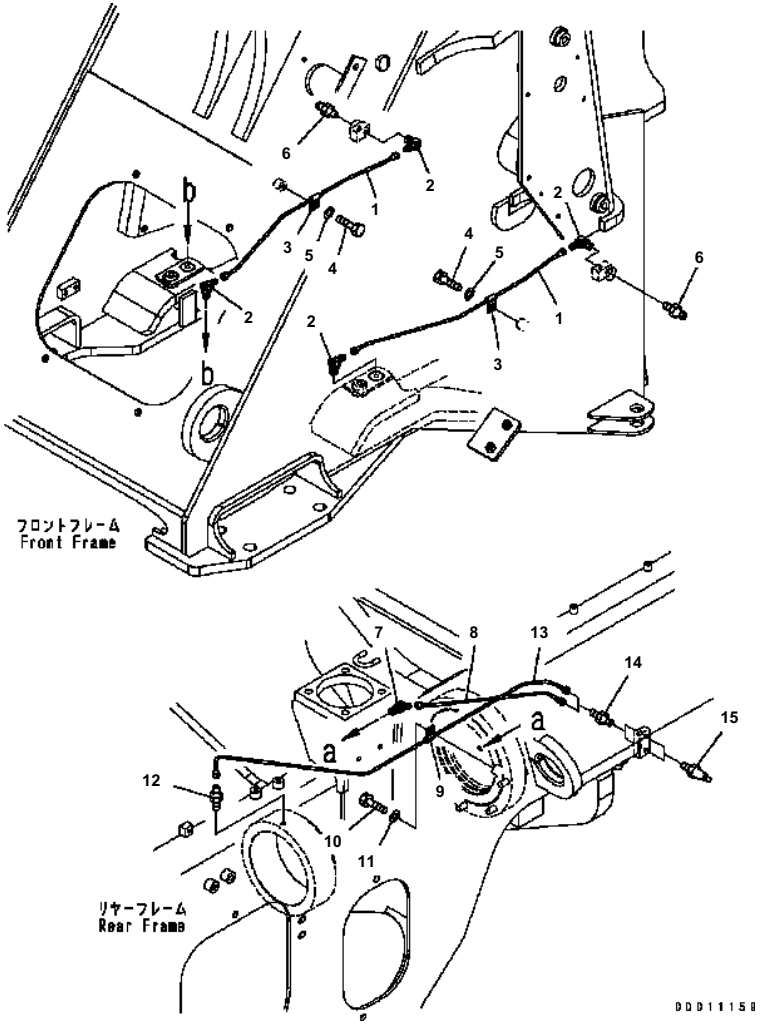

WA200-5 S/N B10001-UP

REMOTE GREASE

Item	Part No.	Description	Qty	Options
1	417-46-36250	TUBE	2	SN:B10001--
2	07217-70510	ELBOW	4	SN:B10001--
3	04434-50510	CLIP	2	SN:B10001--
4	01010-81016	BOLT	2	SN:B10001--
5	01643-31032	WASHER	2	SN:B10001--
6	07020-00000	FITTING	2	SN:B10001--
7	07217-70510	ELBOW	1	SN:B10001--
8	418-46-18114	TUBE	1	SN:B10001--
9	04434-50510	CLIP	1	SN:B10001--
10	01010-81016	BOLT	1	SN:B10001--
11	01643-31032	WASHER	1	SN:B10001--
12	07214-70510	CONNECTOR	1	SN:B10001--
13	417-46-36-113	TUBE	1	SN:B10393--
	417-46-36112	TUBE	1	SN:B10001--B10392
14	07214-70510	CONNECTOR	2	SN:B10001--
15	07020-00675	FITTING	2	SN:B10001--

Ref. J4710-01A0 Page 210100

OPERATOR'S COMPARTMENT AND CONTROL SYSTEM

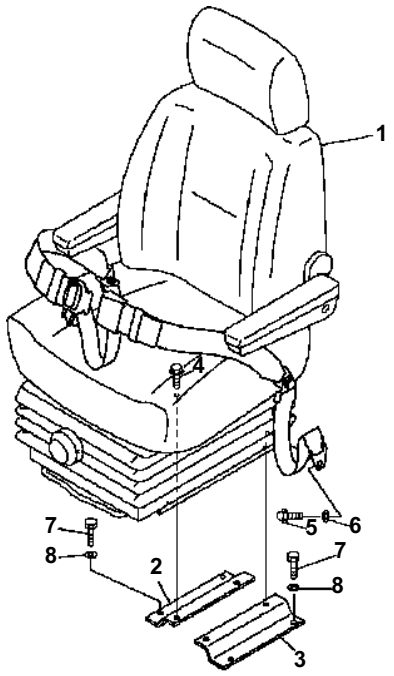

PDE9556

WA200-5 S/N B10001-UP

OPERATOR'S SEAT (SUSPENTION) (FABRIC TYPE) (KAB)

Item	Part No.	Description	Qty	Options
1	418-57-B1220	SEAT ASS'Y	1	SN:B10001--
2	418-57-B1310	BRACKET {R.H.}	1	SN:B10001--
3	418-57-B1320	BRACKET {L.H.}	1	SN:B10001--
4	01435-40820	BOLT	4	SN:B10001--
5	02030-70725	BOLT	2	SN:B10153--
6	01643-51232	WASHER	2	SN:B10153--
7	01010-81230	BOLT	4	SN:B10001--
8	01843-31232	WASHER	4	SN:B10001--

Ref. K0110-01A7 Page 240010

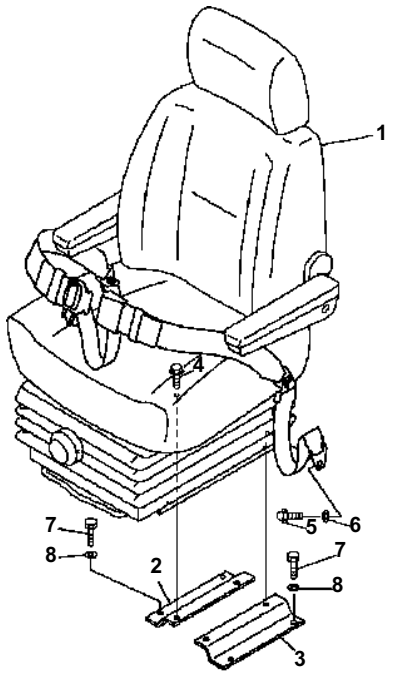

WA200-5 S/N B10001-UP

OPERATOR'S SEAT (SUSPENTION) (VINIL TYPE) (KAB)

Item	Part No.	Description	Qty	Options
1	418-57-B1230	SEAT ASS'Y	1	SN:B10001--
2	418-57-B1310	BRACKET {R.H.}	1	SN:B10001--
3	418-57-B1320	BRACKET {L.H.}	1	SN:B10001--
4	01435-40820	BOLT	4	SN:B10001--
5	02030-70725	BOLT	2	SN:B10153--
6	01643-51232	WASHER	2	SN:B10153--
7	01010-81230	BOLT	4	SN:B10001--
8	01843-31232	WASHER	4	SN:B10001--

Ref. K0110-01A8 Page 240020

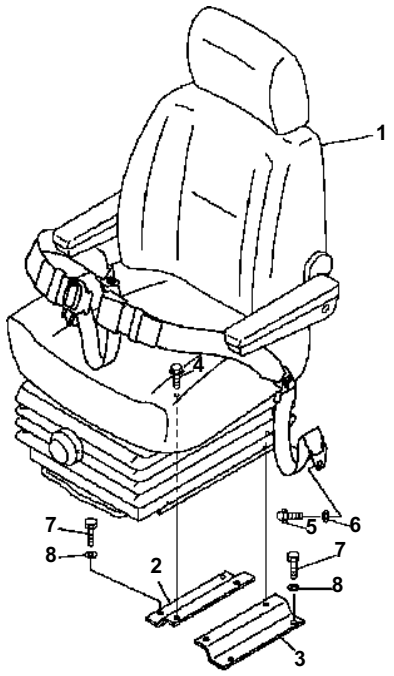

WA200-5 S/N B10001-UP

OPERATOR'S SEAT (SUSPENTION) (FABRIC TYPE) (SEAT BELT W=76)

Item	Part No.	Description	Qty	Options
1	418-57-B1240	SEAT ASS'Y	1	SN:B10153--
2	418-57-B1310	BRACKET {R.H.}	1	SN:B10153--
3	418-57-B1320	BRACKET {L.H.}	1	SN:B10153--
4	01435-40820	BOLT	4	SN:B10153--
5	02030-70725	BOLT	2	SN:B10153--
6	01643-51232	WASHER	2	SN:B10153--
7	01010-81230	BOLT	4	SN:B10153--
8	01843-31232	WASHER	4	SN:B10153--

Ref. K0110-01A9 Page 240021

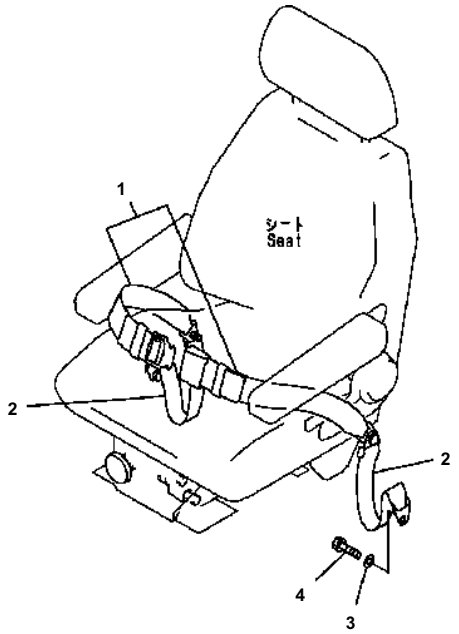

PWE3637

WA200-5 S/N B10001-UP

SEAT BELT (78 MM) (FOR SUSPENTION) (#B10001-B10152)

Item	Part No.	Description	Qty	Options
1	09409-10001	BELT¤ LAP	1	SN:B10001--B10152
	09409-00001	· BOLT	2	SN:B10001--B10152
	01643-51232	· WASHER	2	SN:B10001--B10152
	09409-00003	· NUT	2	SN:B10001--B10152
2	09409-20000	BELT¤ TETHER	2	SN:B10001--B10152
	09409-00001	· BOLT	2	SN:B10001--B10152
	09409-00002	· WASHER	2	SN:B10001--B10152
	09409-00003	· NUT	2	SN:B10001--B10152
3	416-40-11150	WASHER	1	SN:B10001--B10152
4	02030-70719	BOLT	2	SN:B10001--B10152

Ref. K0160-01A4 Page 240030

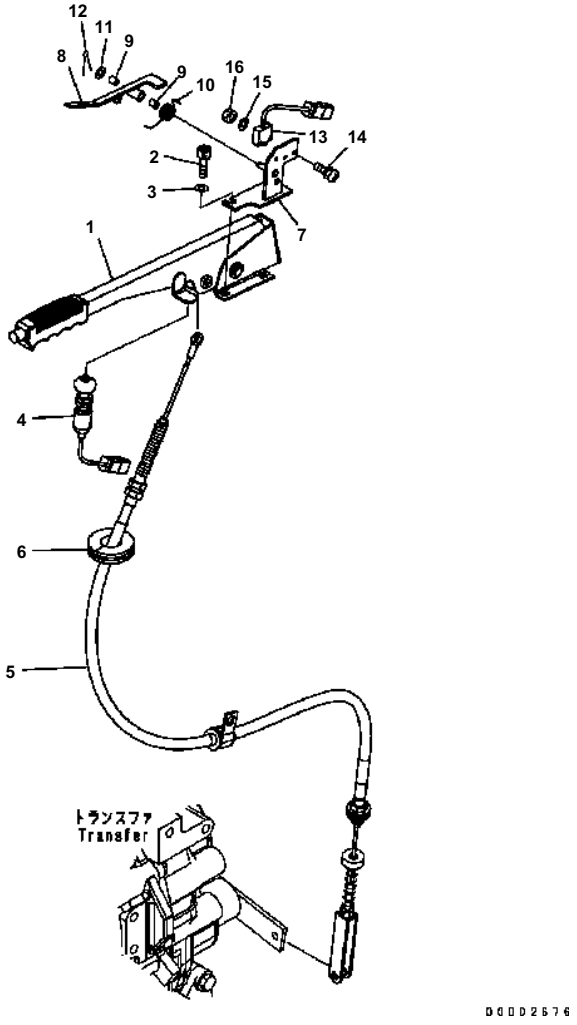

WA200-5 S/N B10001-UP

FLOOR (PARKING BRAKE)

Item	Part No.	Description	Qty	Options
1	418-22-36111	LEVER ASS'Y	1	SN:B10001--
2	01252-80825	BOLT	4	SN:B10001--
3	01643-50823	WASHER	4	SN:B10001--
4	421-S33-3282	SWITCH	1	SN:B10001--
5	418-22-36122	CABLE	1	SN:B10001--
6	416-22-26170	CAP	1	SN:B10001--
7	418-22-36152	PLATE	1	SN:B10119--
	418-22-36151	PLATE	1	SN:B10001--B10118
8	418-22-36174	PLATE	1	SN:B10260--
	418-22-36173	PLATE	1	SN:B10119--B10259
	418-22-36172	PLATE	1	SN:B10001--B10118
9	417-43-17430	BUSHING	2	SN:B10001--
10	417-43-37990	SPRING	1	SN:B10119--
	417-43-17440	SPRING	1	SN:B10001--B10118
11	01641-20608	WASHER	1	SN:B10001--
12	04050-11612	PIN	1	SN:B10001--
13	421-S33-3282	SWITCH	1	SN:B10119--
	418-22-36220	SWITCH	1	SN:B10001--B10118
14	01023-10320	SCREW	2	SN:B10001--B10118
15	01640-20305	WASHER	2	SN:B10001--B10118
16	01580-10302	NUT	2	SN:B10001--B10118

Ref. K0210-01A0 Page 240040

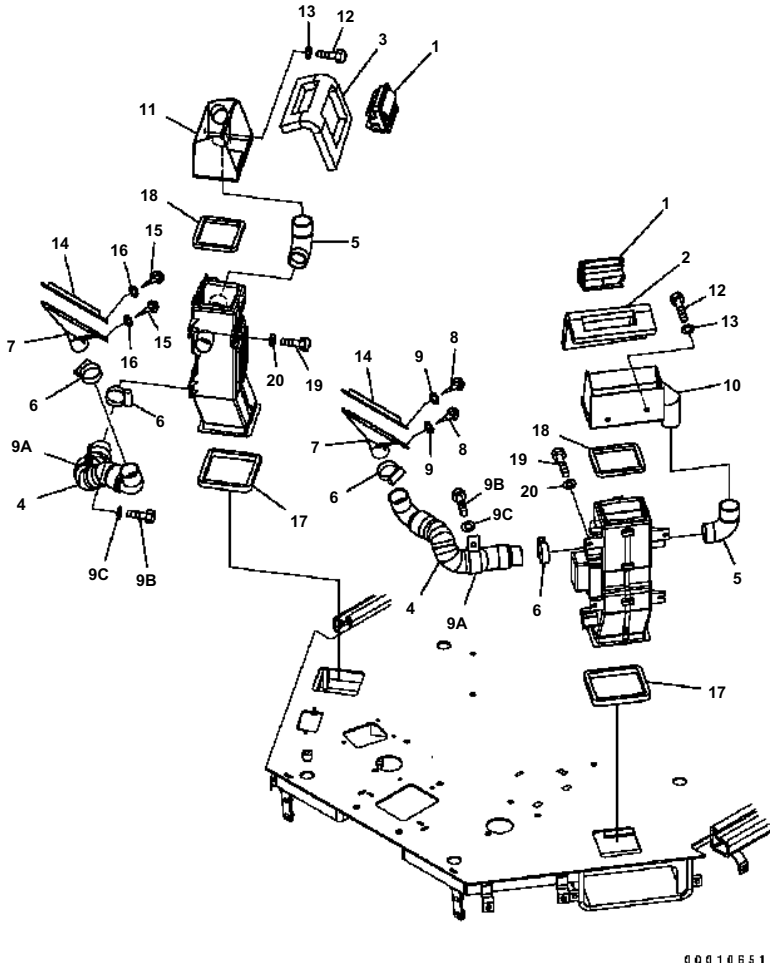

WA200-5 S/N B10001-UP

AIR CONDITIONER DUCT (FRONT DUCT)

Item	Part No.	Description	Qty	Options
1	201-979-7820	GRILLE	2	SN:B10001--
2	418-07-33630	SHEET {L.H.}	1	SN:B10001--
3	418-07-33640	SHEET {R.H.}	1	SN:B10001--
4	42C-07-13131	HOSE	2	SN:B10001--
5	418-07-29450	CONNECTOR	2	SN:B10001--
6	07289-00045	CLAMP	4	SN:B10001--
7	421-07-23990	NOZZLE	2	SN:B10001--
8	01370-00412	SCREW	4	SN:B10001--
9	01611-04045	WASHER	4	SN:B10001--
9A	21K-62-21660	CLIP	2	SN:B10001--
9B	01010-81025	BOLT	2	SN:B10001--
9C	01643-31032	WASHER	2	SN:B10001--
10	418-07-33810	DUCT {L.H.}	1	SN:B10001--
11	418-07-33820	DUCT {R.H.}	1	SN:B10001--
12	01010-80616	BOLT	4	SN:B10001--
13	01643-30623	WASHER	4	SN:B10001--
14	418-07-33130	PLATE	2	SN:B10001--
15	01370-00412	SCREW	4	SN:B10001--
16	01611-04045	WASHER	4	SN:B10001--
17	421-07-23810	SHEET	2	SN:B10001--
18	421-07-23820	SHEET	2	SN:B10001--
19	01010-80616	BOLT	8	SN:B10001--
20	01643-30623	WASHER	8	SN:B10001--

Ref. K0210-02A0 Page 240050

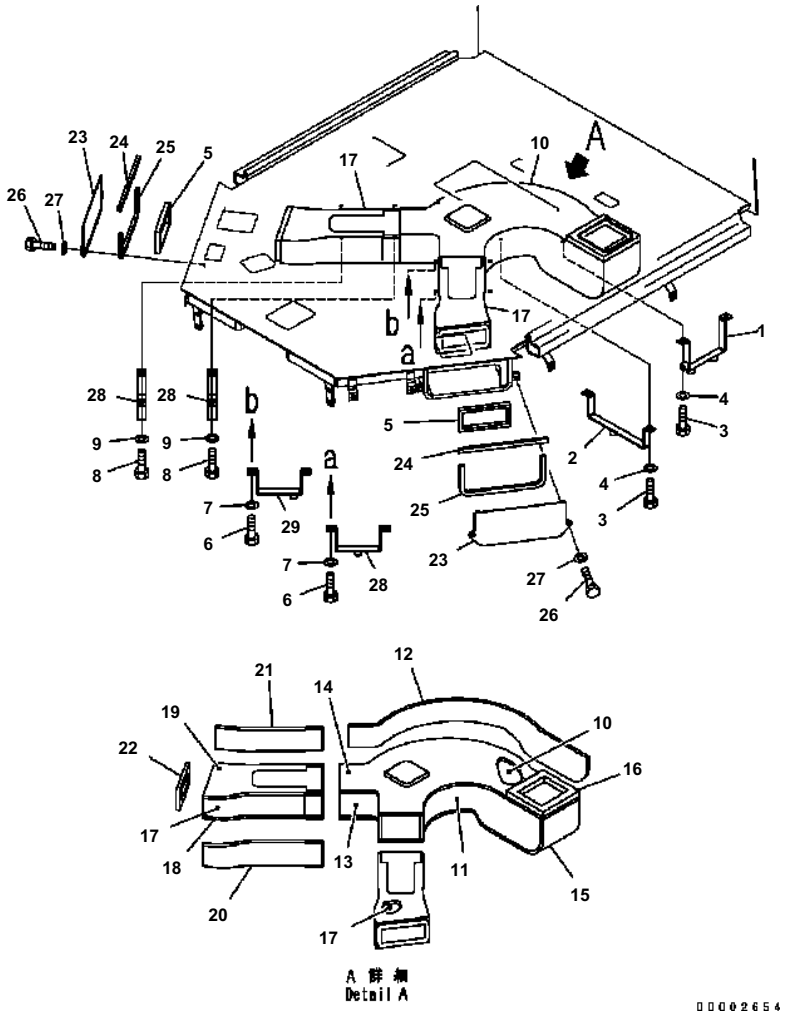

WA200-5 S/N B10001-UP

AIR CONDITIONER DUCT (FLOOR DUCT)

Item	Part No.	Description	Qty	Options
1	418-07-33611	CLAMP	1	SN:B10001--
2	421-07-23660	CLAMP	1	SN:B10001--
3	01010-81020	BOLT	4	SN:B10001--
4	01643-31032	WASHER	4	SN:B10001--
5	421-07-23751	SHEET	2	SN:B10001--
6	01010-81020	BOLT	4	SN:B10001--
7	01643-31032	WASHER	4	SN:B10001--
8	01010-81020	BOLT	4	SN:B10001--
9	01643-31032	WASHER	4	SN:B10001--
	421-07-23600	DUCT ASS'Y	1	SN:B10001--
10	421-07-23610	· DUCT	1	SN:B10001--
11	423-07-23110	· SHEET	1	SN:B10001--
12	423-07-23120	· SHEET	1	SN:B10001--
13	423-07-23130	· SHEET	1	SN:B10001--
14	423-07-23140	· SHEET	1	SN:B10001--
15	423-07-23150	· SHEET	1	SN:B10001--
16	421-07-23771	· SHEET	1	SN:B10001--
	421-07-23620	DUCT ASS'Y	2	SN:B10001--
17	421-07-23640	· DUCT	1	SN:B10001--
18	423-07-23160	· SHEET	1	SN:B10001--
19	423-07-23170	· SHEET	1	SN:B10001--
20	423-07-23180	· SHEET	1	SN:B10001--
21	423-07-23190	· SHEET	1	SN:B10001--
22	423-07-23211	· SHEET	1	SN:B10001--
	418-07-33710	PLATE ASS'Y	2	SN:B10001--
23	418-07-33720	· PLATE	1	SN:B10001--
24	418-07-33730	· FINISHER	1	SN:B10001--
25	418-07-33740	· SHEET	1	SN:B10001--
26	01010-81016	BOLT	4	SN:B10001--
27	01643-31032	WASHER	4	SN:B10001--
28	421-07-23680	CLAMP	3	SN:B10001--
29	418-07-33620	CLAMP	1	SN:B10001--

Ref. K0210-03A0 Page 240060

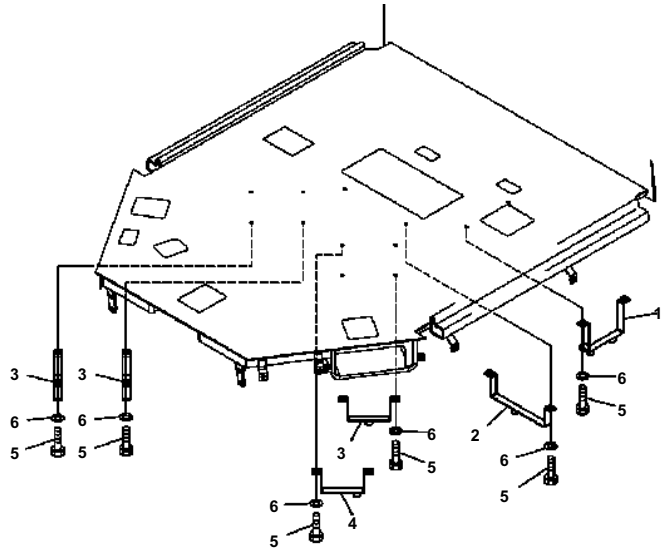

00002702

WA200-5 S/N B10001-UP

AIR CONDITIONER DUCT LESS

Item	Part No.	Description	Qty	Options
1	418-07-33611	CLAMP	1	SN:B10001--
2	421-07-23660	CLAMP	1	SN:B10001--
3	421-07-23680	CLAMP	3	SN:B10001--
4	418-07-33620	CLAMP	1	SN:B10001--
5	01010-81020	BOLT	12	SN:B10001--
6	01643-31032	WASHER	12	SN:B10001--

Ref. K0210-03A5 Page 240070

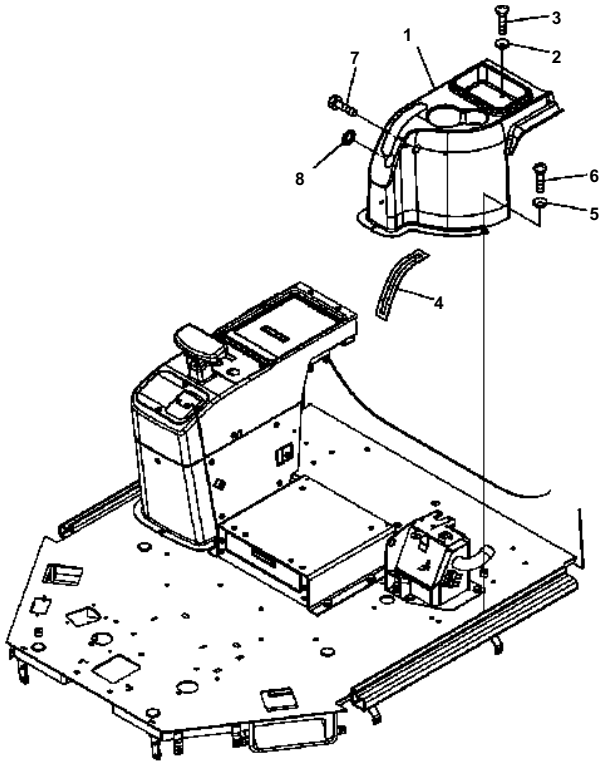

00D02575

WA200-5 S/N B10001-UP

FLOOR (CONSOLE COVER L.H.)

Item	Part No.	Description	Qty	Options
1	418-54-32634	COVER	1	SN:B10001--
2	418-926-3490	WASHER	4	SN:B10001--
3	01225-70616	SCREW	4	SN:B10001--
4	418-54-32680	AWNING	2	SN:B10001--
5	418-926-3490	WASHER	3	SN:B10001--
6	01225-70616	SCREW	3	SN:B10001--
7	02030-70719	BOLT	1	SN:B10001--
8	14X-54-18150	CAP	1	SN:B10001--

Ref. K0210-04A0 Page 240080

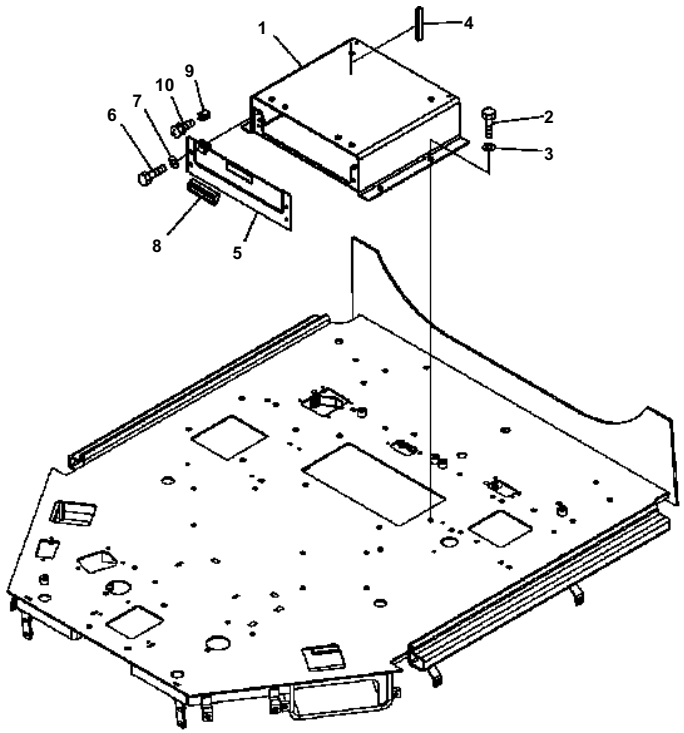

00002655

WA200-5 S/N B10001-UP

FLOOR (FLOOR)

Item	Part No.	Description	Qty	Options
1	418-54-32224	BRACKET ASS'Y	1	SN:B10001--
	418-54-32230	· SHEET	1	SN:B10001--
2	01010-81225	BOLT	4	SN:B10001--
3	01643-31232	WASHER	4	SN:B10001--
4	421-54-22520	FINISHER	1	SN:B10001--
5	418-54-32891	COVER	1	SN:B10001--
6	01010-D0616	BOLT	4	SN:B10001--
7	01643-70623	WASHER	4	SN:B10001--
8	421-54-22750	HANDLE	1	SN:B10001--
9	08052-01311	CLIP	1	SN:B10001--
10	01023-10612	SCREW	1	SN:B10001--

Ref. K0210-05A0 Page 240090

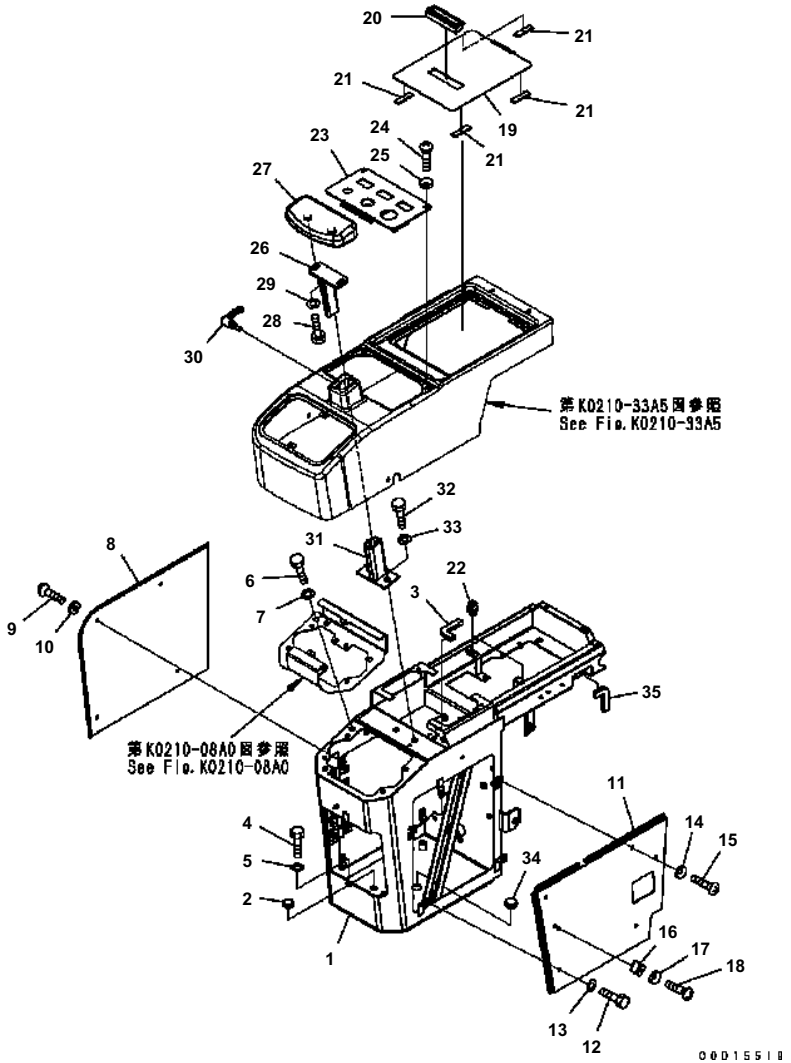

FLOOR (CONSOLE BOX) (R.H.) (EXCEPT JAPAN)

Item	Part No.	Description	Qty	Wt.	Options
1	419-54-32625	BOX	1	0	SN:B10001--
2	09415-01008	CAP	4	0	SN:B10001--
3	421-54-22520	FINISHER	1	0	SN:B10001--
4	01010-81225	BOLT	4	0	SN:B10001--
5	01643-31232	WASHER	4	0	SN:B10001--
6	01010-81020	BOLT	2	0	SN:B10001--
7	01643-31032	WASHER	2	0	SN:B10001--
8	419-54-32672	PLATE	1	0	SN:B10001--
9	01225-70616	SCREW	10	0	SN:B10001--
10	418-926-3490	WASHER	10	0	SN:B10001--
11	418-54-32424	PLATE	1	0	SN:B10001--
12	01010-80616	BOLT	2	0	SN:B10001--
13	01643-30623	WASHER	2	0	SN:B10001--
14	418-926-3490	WASHER	2	0	SN:B10001--
15	01225-70616	SCREW	2	0	SN:B10001--
16	418-43-38311	PLATE	1	0	SN:B10001--
17	418-926-3490	WASHER	2	0	SN:B10001--
18	01225-70616	SCREW	2	0	SN:B10001--
19	418-54-32774	COVER	1	0	SN:B10001--
20	421-54-22750	HANDLE	1	0	SN:B10001--
21	421-09-12780	CUSHION	4	0	SN:B10001--
22	23S-55-51530	CLIP	2	0	SN:B10001--
23	418-54-33520	COVER	1	0	SN:B10001--
24	01225-70616	SCREW	2	0	SN:B10001--
25	418-926-3490	WASHER	2	0	SN:B10001--
26	418-43-31220	BRACKET	1	0	SN:B10001--
27	421-43-31520	REST	1	0	SN:B10001--
28	01010-80616	BOLT	2	0	SN:B10001--
29	01643-30623	WASHER	2	0	SN:B10001--
30	421-43-31551	LEVER	1	0	SN:B10001--
31	418-54-32241	BRACKET	1	0	SN:B10001--
32	01010-81020	BOLT	2	0	SN:B10001--
33	01643-31032	WASHER	2	0	SN:B10001--
34	09415-01610	CAP	1	0	SN:B10001--
35	421-54-22520	FINISHER	1	0	SN:B10001--

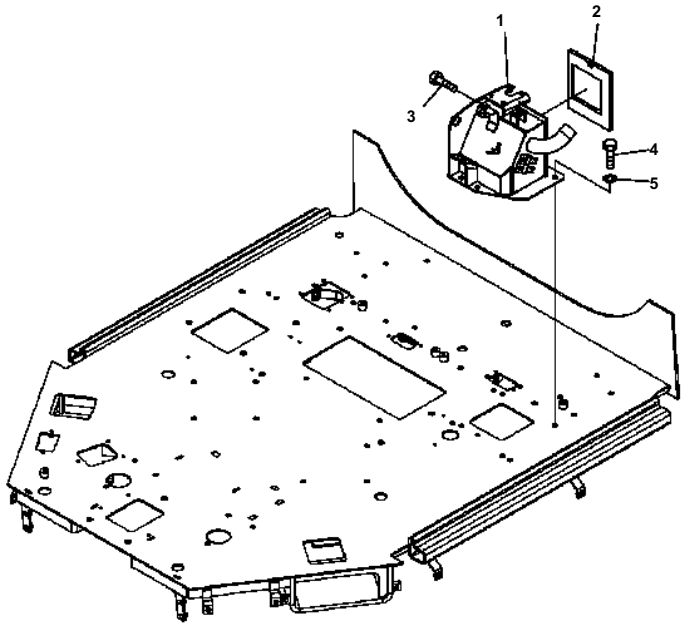

D0002674

WA200-5 S/N B10001-UP

FLOOR (CONSOLE BOX) (L.H.)

Item	Part No.	Description	Qty	Options
1	418-54-32921	BOX	1	SN:B10119--
	418-54-32920	BOX	1	SN:B10001--B10118
2	418-07-33110	SHEET	1	SN:B10001--
3	02030-70719	BOLT	1	SN:B10001--
4	01010-81020	BOLT	4	SN:B10001--
5	01643-31032	WASHER	4	SN:B10001--

Ref. K0210-07A0 Page 240110

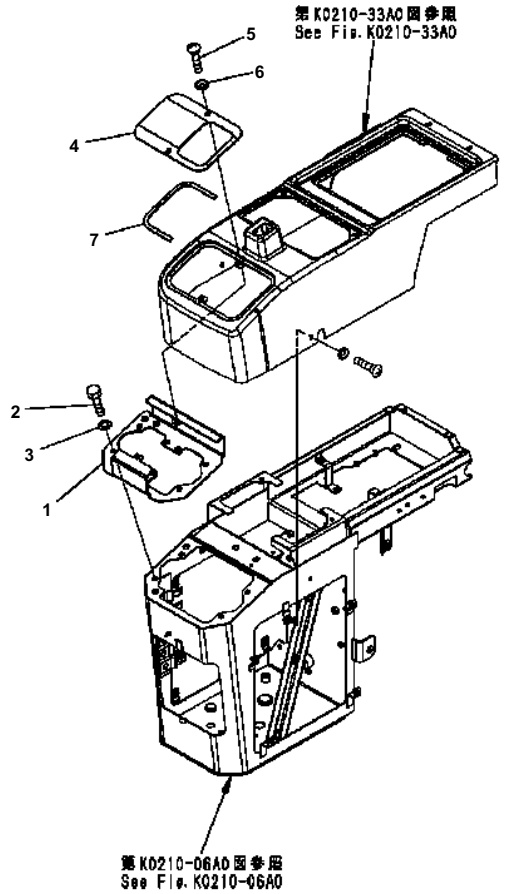

00D10853

WA200-5 S/N B10001-UP

FLOOR (COVER R.H.)

Item	Part No.	Description	Qty	Options
1	418-54-32252	PLATE	1	SN:B10001--
2	01010-80816	BOLT	4	SN:B10001--
3	01643-30823	WASHER	4	SN:B10001--
4	418-54-32263	PLATE	1	SN:B10001--
5	01225-70616	SCREW	2	SN:B10001--
6	418-926-3490	WASHER	2	SN:B10001--
7	418-54-32440	PLATE	1	SN:B10001--

Ref. K0210-08A0 Page 240120

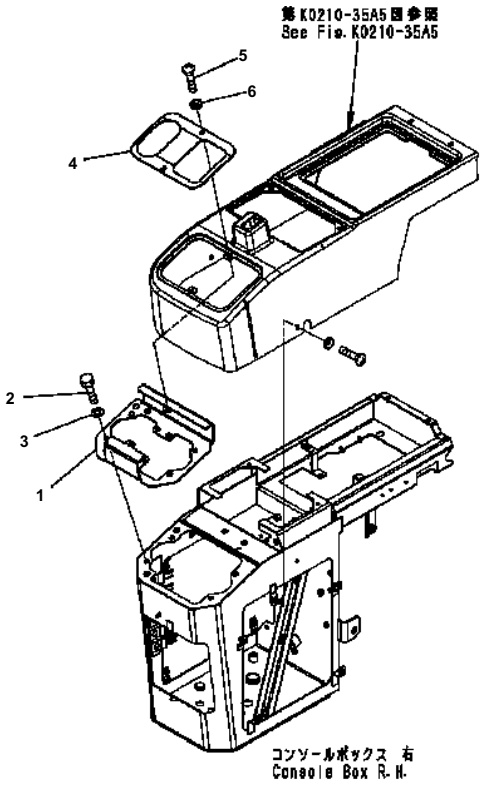

D0015521

WA200-5 S/N B10001-UP

FLOOR (COVER R.H.) (FOR MONO + 1-ATTACHMENT LEVER)

Item	Part No.	Description	Qty	Options
1	418-54-32252	PLATE	1	SN:B10001--
2	01010-80816	BOLT	4	SN:B10001--
3	01643-30823	WASHER	4	SN:B10001--
4	418-U77-3681	COVER	1	SN:B10001--
5	01225-70616	SCREW	2	SN:B10001--
6	418-926-3490	WASHER	2	SN:B10001--

Ref. K0210-08A4 Page 240130

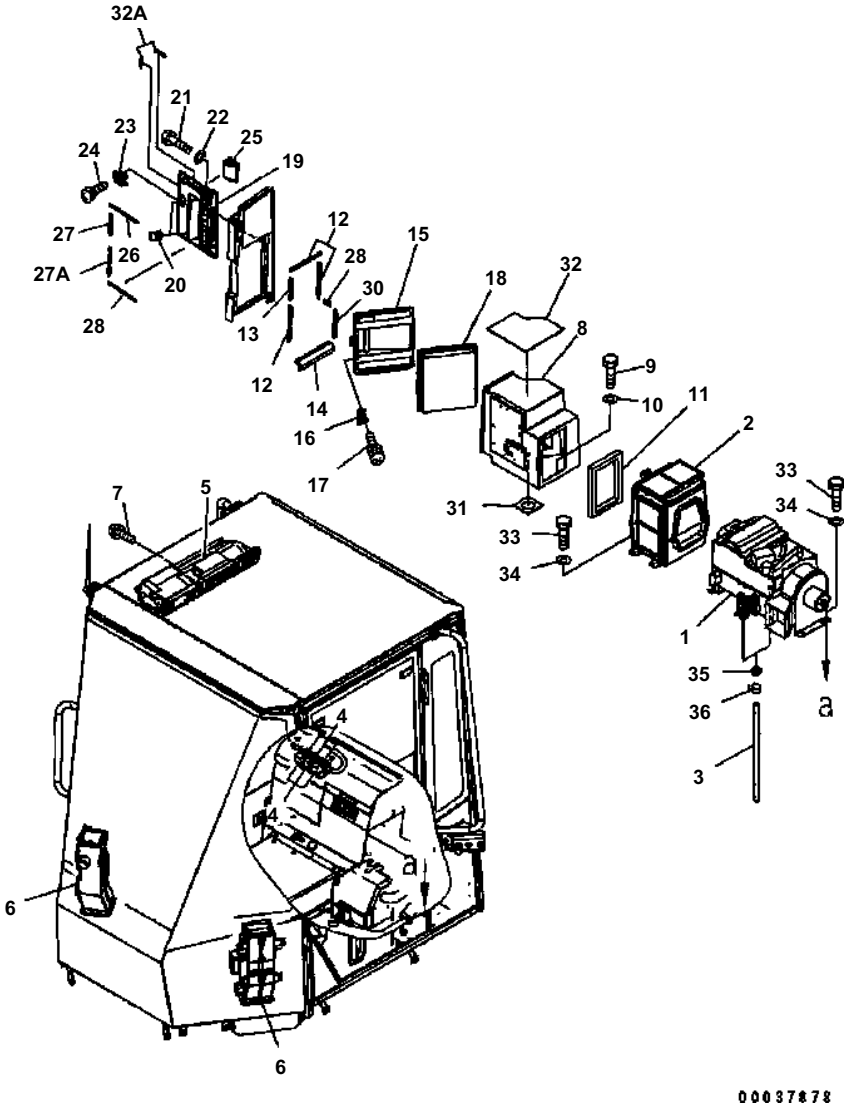

FLOOR (AIR CONDITIONER)

Item	Part No.	Description	Qty	Options
	418-S62-3110	AIR CONDITIONER KIT	1	SN:B10001--
1	425-07-21111	· AIR CONDITIONER U.	1	SN:B10001--
2	421-07-31260	· DAMPER ASS'Y	1	SN:B10001--
3	421-07-21280	· HOSE	2	SN:B10001--
4	20Y-979-6771	· RELAY	6	SN:B10119--
	418-S62-3140	· RELAY	6	SN:B10001--B10118
	421-07-31420	KIT	1	SN:B10001--
5	421-07-31240	· CONTROLLER	1	SN:B10001--
6	425-07-21152	· DUCT ASS'Y	2	SN:B10001--
7	01023-10514	SCREW	4	SN:B10001--
8	418-07-33413	BOX	1	SN:B10001--
9	01010-81025	BOLT	3	SN:B10001--
10	01643-31032	WASHER	3	SN:B10001--
11	423-07-23530	SHEET	1	SN:B10001--
12	418-07-33432	SHEET	3	SN:B10001--
13	418-07-33442	SHEET	1	SN:B10001--
14	418-07-33462	SHEET	1	SN:B10001--
15	418-07-B3470	COVER	1	SN:B10135--
	418-07-33474	COVER	1	SN:B10001--B10134
16	419-926-3620	CLIP	1	SN:B10001--
17	01023-60410	SCREW	2	SN:B10001--
18	427-07-22120	FILTER	1	SN:B10001--
19	418-926-B640	COVER	1	SN:B10099--
	418-926-3672	COVER	1	SN:B10001--B10094
20	20Y-54-52791	STOPPER	2	SN:B10001--
21	01010-80620	BOLT	2	SN:B10001--
22	01643-30623	WASHER	2	SN:B10001--
23	419-926-3630	STOPPER	1	SN:B10001--
24	01023-10412	SCREW	2	SN:B10099--
	01023-10512	SCREW	2	SN:B10001--B10094
25	418-926-3660	HANDLE	1	SN:B10001--
26	418-07-33511	CUSHION	2	SN:B10001--
27	418-07-33560	CUSHION	1	SN:B10001--
27A	418-07-33570	CUSHION	1	SN:B10001--
28	418-07-33540	CUSHION	1	SN:B10001--
29	418-07-33480	FINISHER	1	SN:B10001--
30	418-07-33490	FINISHER	1	SN:B10001--
31	421-07-23420	SHEET	1	SN:B10001--
32	418-54-33550	INSULATOR	1	SN:B10001--
32A	418-07-33550	SEAL	2	SN:B10001--

WA200-5 S/N B10001-UP

FLOOR (AIR CONDITIONER)

Item	Part No.	Description	Qty	Options
33	01010-81025	BOLT	7	SN:B10001--
34	01643-31032	WASHER	7	SN:B10001--
35	421-09-21380	GROMMET	2	SN:B10001--
36	07285-00155	CLIP	2	SN:B10076--
	07285-00150	CLIP	2	SN:B10001--B10075

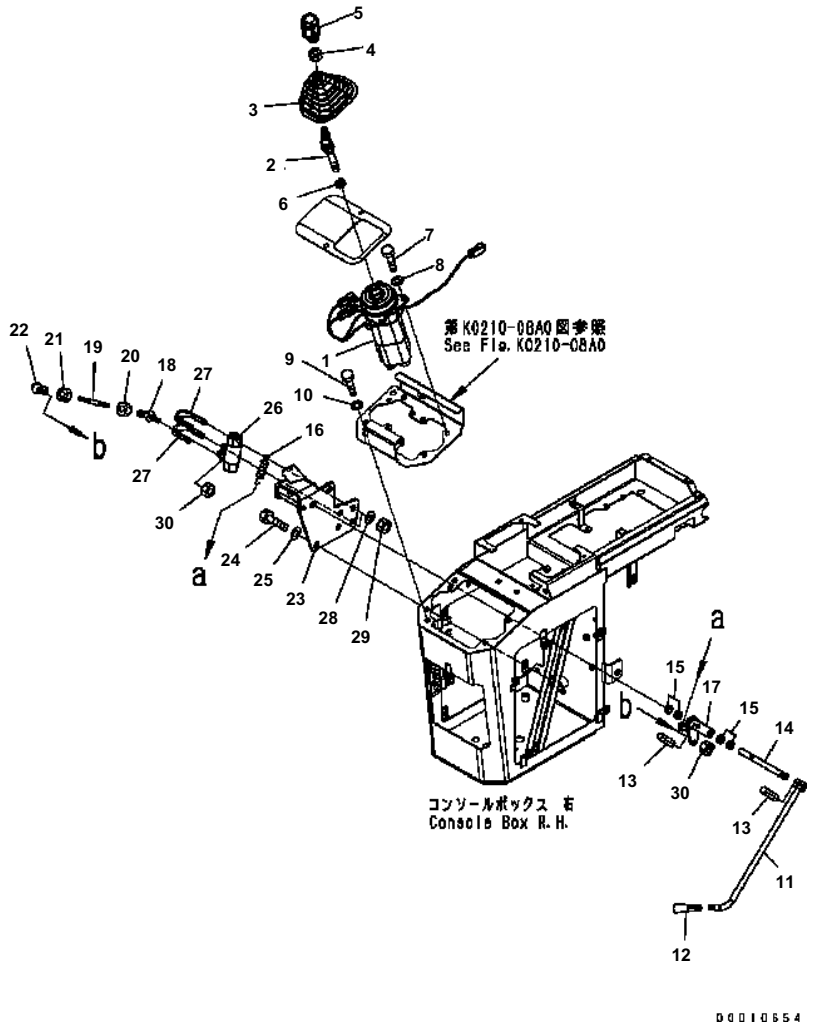

WA200-5 S/N B10001-UP

FLOOR (LOADER CONTROL) (1/2) (P.P.C VALVE AND LEVER) (FOR MONO LEVER)

Item	Part No.	Description	Qty	Options
1	(702-16-03661)	PILOT VALVE	1	SN:B10001--
	416-43-38110	LEVER ASS'Y	1	SN:B10001--
2	416-43-38121	· LEVER	1	SN:B10001--
3	418-43-38190	· BOOT	1	SN:B10001--
4	421-09-21230	· NUT	1	SN:B10001--
5	421-43-28410	· KNOB	1	SN:B10001--
6	01582-11411	NUT	1	SN:B10001--
7	01010-80820	BOLT	4	SN:B10001--
8	01643-30823	WASHER	4	SN:B10001--
9	01010-81016	BOLT	1	SN:B10001--
10	01643-31032	WASHER	1	SN:B10001--
11	418-43-38142	LEVER	1	SN:B10001--
12	09305-00800	KNOB	1	SN:B10001--
13	04025-00520	PIN	2	SN:B10001--
14	418-43-38131	SHAFT	1	SN:B10001--
15	421-09-21220	BUSHING	4	SN:B10001--
16	203-43-21370	SPRING	1	SN:B10001--
17	418-43-38120	LEVER	1	SN:B10001--
18	04256-40615	JOINT	1	SN:B10109--
	04256-40616	JOINT	1	SN:B10001--B10108
19	418-43-28150	ROD	1	SN:B10001--
20	01580-10605	NUT	1	SN:B10001--
21	01508-40603	NUT	1	SN:B10001--
22	04256-50616	JOINT	1	SN:B10001--
23	418-43-38112	BRACKET	1	SN:B10001--
24	01010-81220	BOLT	2	SN:B10001--
25	01643-31232	WASHER	2	SN:B10001--
26	20Y-62-15651	VALVE	1	SN:B10001--
27	07283-33442	CLIP	2	SN:B10001--
28	01643-31032	WASHER	4	SN:B10001--
29	01597-01009	NUT	4	SN:B10001--
30	426-09-11130	NUT	2	SN:B10001--

Ref. K0210-10A0 Page 240150

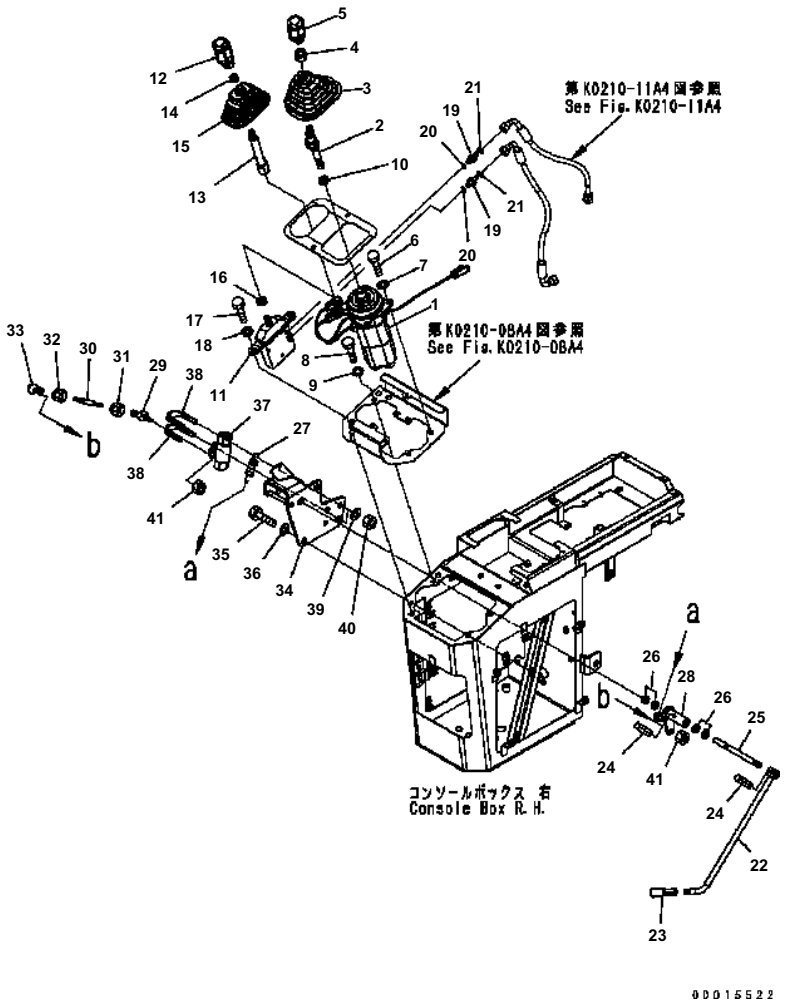

WA200-5 S/N B10001-UP

FLOOR (LOADER CONTROL) (1/2) (P.P.C VALVE AND LEVER) (FOR MONO + 1-ATTACHMENT LEVER)

Item	Part No.	Description	Qty	Options
1	(702-16-03661)	PILOT VALVE	1	SN:B10001--
	416-43-38110	LEVER ASS'Y	1	SN:B10001--
2	416-43-38121	· LEVER	1	SN:B10001--
3	418-43-38190	· BOOT	1	SN:B10001--
4	421-09-21230	· NUT	1	SN:B10001--
5	421-43-28410	· KNOB	1	SN:B10001--
6	01010-80820	BOLT	4	SN:B10001--
7	01643-30823	WASHER	4	SN:B10001--
8	01010-81016	BOLT	1	SN:B10001--
9	01643-31032	WASHER	1	SN:B10001--
10	01582-11411	NUT	1	SN:B10001--
11	(702-16-03370)	PILOT VALVE	1	SN:B10001--
12	421-43-28410	KNOB	1	SN:B10001--
13	418-U77-3761	LEVER	1	SN:B10001--
14	421-09-21230	NUT	1	SN:B10001--
15	421-43-28431	BOOT	1	SN:B10001--
16	01582-11411	NUT	1	SN:B10001--
17	01010-81025	BOLT	2	SN:B10001--
18	01643-31032	WASHER	2	SN:B10001--
19	11Y-62-12140	NIPPLE	2	SN:B10001--
20	07000-12015	O-RING	2	SN:B10056--
	07000-12018	O-RING	2	SN:B10001--B10055
21	02896-11008	O-RING	2	SN:B10001--
22	418-43-38142	LEVER	1	SN:B10001--
23	09305-00800	KNOB	1	SN:B10001--
24	04025-00520	PIN	2	SN:B10001--
25	418-43-38131	SHAFT	1	SN:B10001--
26	421-09-21220	BUSHING	4	SN:B10001--
27	203-43-21370	SPRING	1	SN:B10001--
28	418-43-38120	LEVER	1	SN:B10001--
29	04256-40616	JOINT	1	SN:B10001--
30	418-43-28150	ROD	1	SN:B10001--
31	01580-10605	NUT	1	SN:B10001--
32	01508-40603	NUT	1	SN:B10001--
33	04256-50616	JOINT	1	SN:B10001--
34	418-43-38112	BRACKET	1	SN:B10001--
35	01010-81220	BOLT	2	SN:B10001--
36	01643-31232	WASHER	2	SN:B10001--
37	20Y-62-15651	VALVE	1	SN:B10001--

WA200-5 S/N B10001-UP

FLOOR (LOADER CONTROL) (1/2) (P.P.C VALVE AND LEVER) (FOR MONO + 1-ATTACHMENT LEVER)

Item	Part No.	Description	Qty	Options
38	07283-33442	CLIP	2	SN:B10001--
39	01643-31032	WASHER	4	SN:B10001--
40	01597-01009	NUT	4	SN:B10001--
41	426-09-11130	NUT	2	SN:B10001--

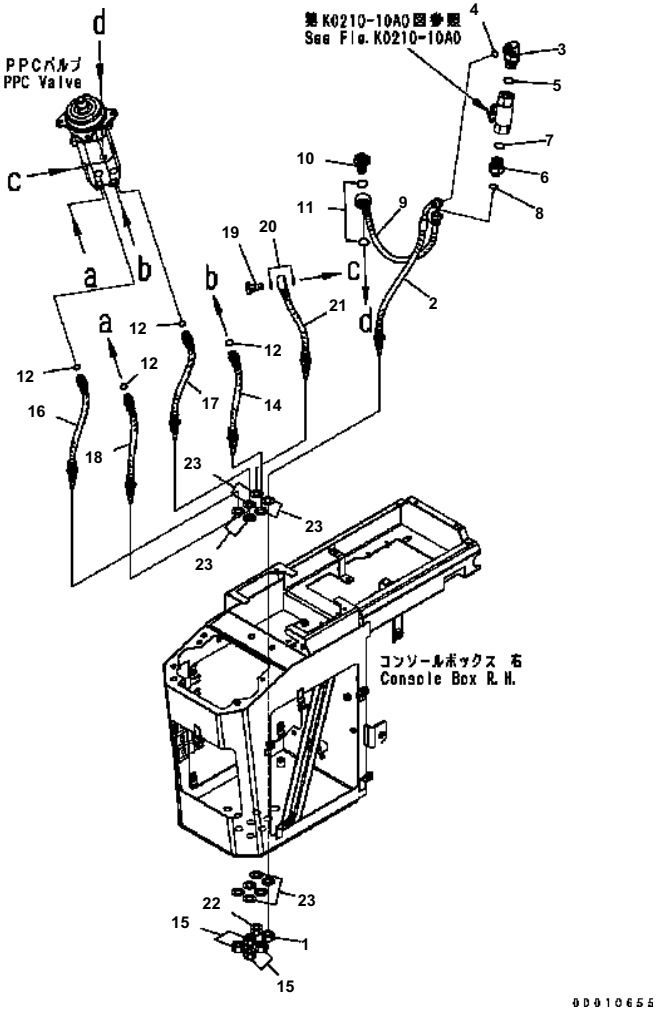

WA200-5 S/N B10001-UP

FLOOR (LOADER CONTROL) (2/2) (HOSE) (FOR MONO LEVER)

Item	Part No.	Description	Qty	Options
1	01583-11408	NUT	1	SN:B10001--
2	418-43-38221	HOSE {RED}	1	SN:B10001--
3	11Y-62-12170	ELBOW	1	SN:B10001--
4	02896-11008	O-RING	1	SN:B10001--
5	07002-02034	O-RING	1	SN:B10001--
6	8255-62-4370	UNION	1	SN:B10001--
7	07002-02034	O-RING	1	SN:B10001--
8	02896-11008	O-RING	1	SN:B10001--
9	418-43-38231	HOSE {RED}	1	SN:B10001--
10	20Y-62-18910	BOLT	1	SN:B10001--
11	07000-02018	O-RING	2	SN:B10001--
12	07002-11423	O-RING	4	SN:B10001--
14	418-43-38243	HOSE {RED}	1	SN:B10001--
15	01583-11408	NUT	4	SN:B10001--
16	418-43-38253	HOSE {BLUE}	1	SN:B10001--
17	418-43-38262	HOSE {YELLOW}	1	SN:B10001--
18	418-43-38272	HOSE {ORANGE}	1	SN:B10001--
19	20Y-62-18890	BOLT	1	SN:B10001--
20	07000-02018	O-RING	2	SN:B10001--
21	418-43-38282	HOSE {BLUE}	1	SN:B10001--
22	01583-11408	NUT	1	SN:B10001--
23	01643-31445	WASHER	12	SN:B10001--

Ref. K0210-11A0 Page 240170

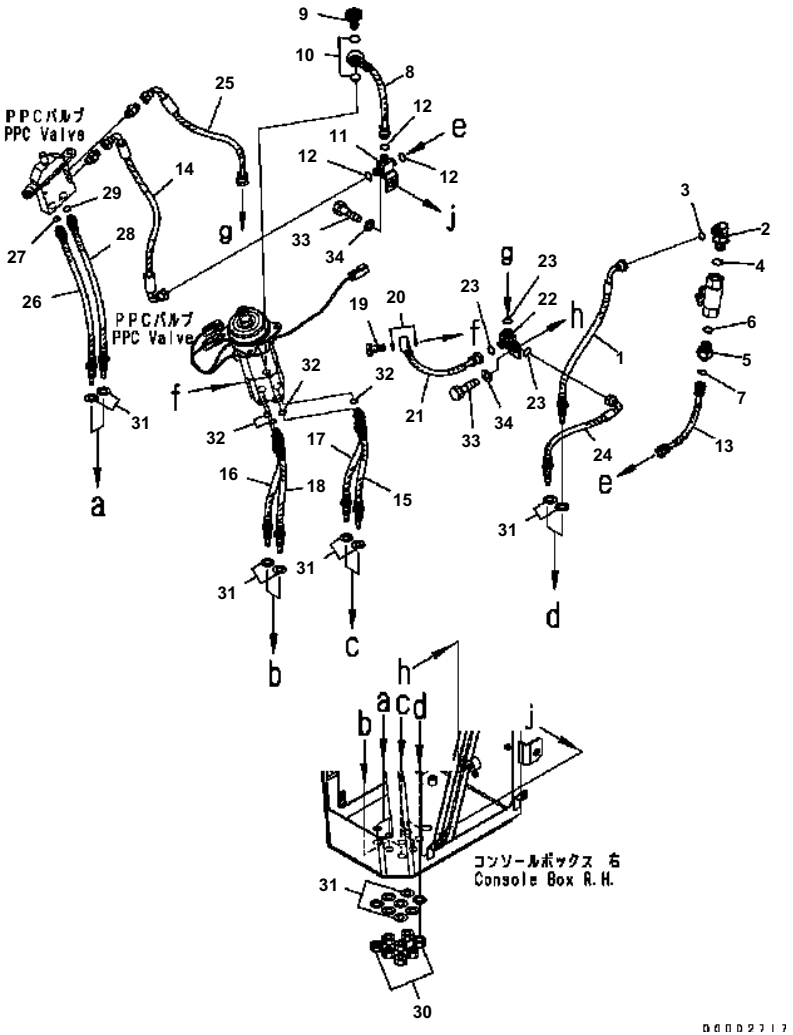

WA200-5 S/N B10001-UP

FLOOR (LOADER CONTROL)

Item	Part No.	Description	Qty	Options
1	418-43-38221	HOSE {RED-BLACK}	1	SN:B10001--
2	11Y-62-12170	ELBOW	1	SN:B10001--
3	02896-11008	O-RING	1	SN:B10001--
4	07002-02034	O-RING	1	SN:B10001--
5	8255-62-4370	UNION	1	SN:B10001--
6	07002-02034	O-RING	1	SN:B10001--
7	02896-11008	O-RING	1	SN:B10001--
8	418-U77-3520	HOSE {RED-BLUE}	1	SN:B10001--
9	20Y-62-18910	BOLT	1	SN:B10001--
10	07000-02018	O-RING	2	SN:B10001--
11	418-U77-3670	BLOCK	1	SN:B10001--
12	02896-11008	O-RING	3	SN:B10001--
13	418-U77-3510	HOSE {RED-BLUE}	1	SN:B10001--
14	418-U77-3531	HOSE {RED-BLUE}	1	SN:B10001--
15	418-43-38243	HOSE {RED}	1	SN:B10001--
16	418-43-38253	HOSE {BLUE}	1	SN:B10001--
17	418-43-38262	HOSE {YELLOW}	1	SN:B10001--
18	418-43-38272	HOSE {ORANGE}	1	SN:B10001--
19	20Y-62-18890	BOLT	1	SN:B10001--
20	07000-02015	O-RING	2	SN:B10001--
21	418-U77-3550	HOSE {BLUE-BLACK}	1	SN:B10001--
22	418-U77-3590	TEE	1	SN:B10001--
23	02896-11008	O-RING	3	SN:B10001--
24	418-U77-3540	HOSE {BLUE-BLACK}	1	SN:B10001--
25	418-U77-3560	HOSE {BLUE-BLACK}	1	SN:B10001--
26	418-U77-3570	HOSE {GREEN}	1	SN:B10001--
27	07000-12011	O-RING	1	SN:B10001--
28	418-U77-3580	HOSE {WHITE-RED}	1	SN:B10001--
29	07000-12011	O-RING	1	SN:B10001--
30	01583-11408	NUT	8	SN:B10001--
31	01643-31445	WASHER	16	SN:B10001--
32	07002-01423	O-RING	4	SN:B10001--
33	01010-81220	BOLT	2	SN:B10001--
34	01643-31232	WASHER	2	SN:B10001--

Ref. K0210-11A4 Page 240180

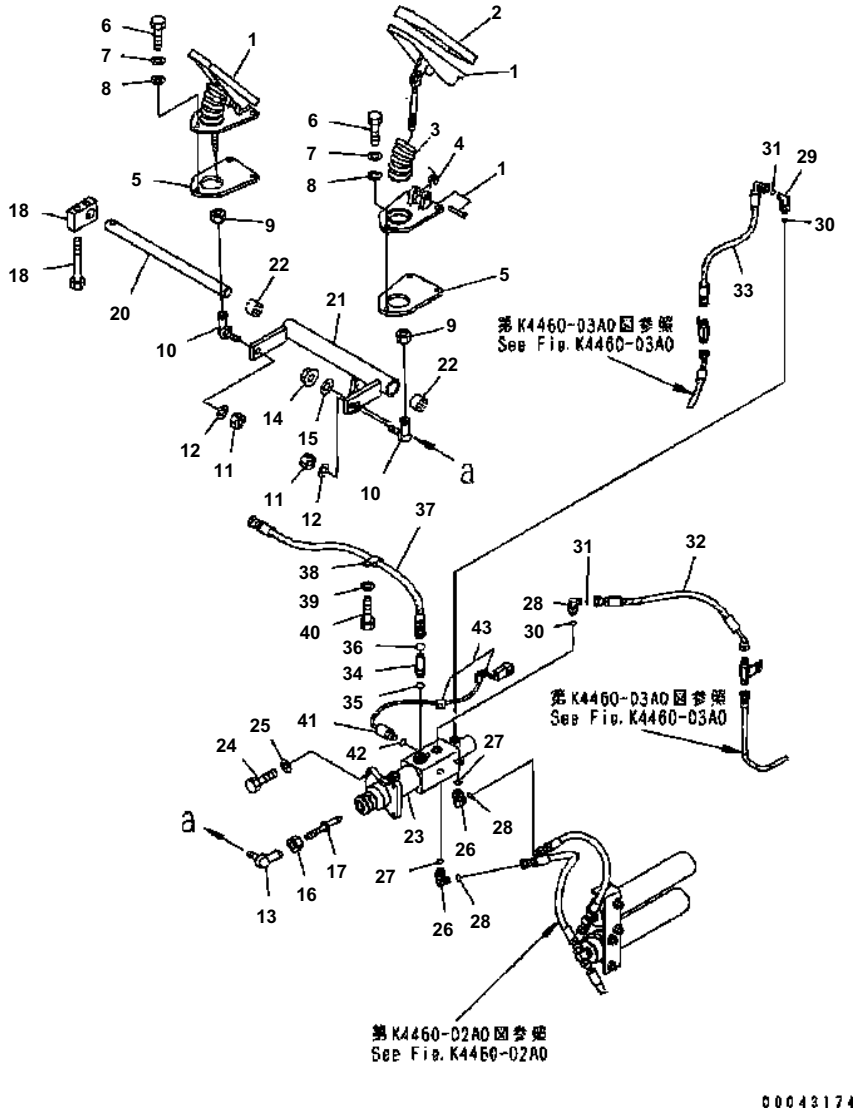

WA200-5 S/N B10001-UP

FLOOR (BRAKE CONTROL) (#B10001-)

Item	Part No.	Description	Qty	Options
1	418-43-37111	PEDAL	2	SN:B10001--
2	363-43-37410	· PAD	1	SN:B10001--
3	417-43-27410	· BOOT	1	SN:B10001--
4	417-43-27420	· SPRING	1	SN:B10001--
5	418-43-37410	PLATE	2	SN:B10001--
6	01252-71040	BOLT	6	SN:B10211--
	01010-81035	BOLT	6	SN:B10001--B10210
7	01643-31032	WASHER	6	SN:B10001--
8	01643-71032	WASHER	6	SN:B10001--
9	01582-11210	NUT	2	SN:B10001--
10	04256-41230	JOINT	2	SN:B10001--
11	01595-01210	NUT	2	SN:B10001--
12	01643-31232	WASHER	2	SN:B10001--
13	04256-41230	JOINT	1	SN:B10001--
14	01595-01210	NUT	1	SN:B10001--
15	01643-31232	WASHER	1	SN:B10001--
16	01582-11210	NUT	1	SN:B10001--
17	418-43-37140	ROD	1	SN:B10001--
18	418-43-37130	PLATE	1	SN:B10001--
19	01010-81265	BOLT	2	SN:B10001--
20	417-43-27120	SHAFT	1	SN:B10001--
21	418-43-37120	LEVER	1	SN:B10001--
22	06124-02520	BEARING	2	SN:B10001--
23	417-43-38110	VALVE ASS'Y{BRAKE}	1	SN:B10001--
24	01010-81035	BOLT	4	SN:B10001--
25	01643-31032	WASHER	4	SN:B10001--
26	21W-62-43980	ELBOW	2	SN:B10001--
27	07000-12011	O-RING	2	SN:B10001--
28	02896-11008	O-RING	2	SN:B10001--
29	418-T80-3281	ELBOW	2	SN:B10001--
30	07000-12011	O-RING	2	SN:B10001--
31	02896-11009	O-RING	2	SN:B10001--
32	02755-00304	HOSE	1	SN:B10001--
33	417-43-38130	HOSE	1	SN:B10001--
34	56B-88-12320	ELBOW	1	SN:B10001--
35	07000-12014	O-RING	1	SN:B10001--
36	02896-11009	O-RING	1	SN:B10001--
37	418-43-31310	HOSE	1	SN:B10001--
	08210-01202	· SPIRAL TUBE	1	SN:B10001--
38	04434-51610	CLIP	1	SN:B10001--

Ref. K0210-12A0A Page 240190

WA200-5 S/N B10001-UP

FLOOR (BRAKE CONTROL) (#B10001-)

Item	Part No.	Description	Qty	Options
39	01643-31032	WASHER	1	SN:B10001--
40	01010-81020	BOLT	1	SN:B10001--
41	418-43-37230	SWITCH	1	SN:B10001--
42	07002-11423	O-RING	1	SN:B10001--
43	04434-50610	CLIP	2	SN:B10001--

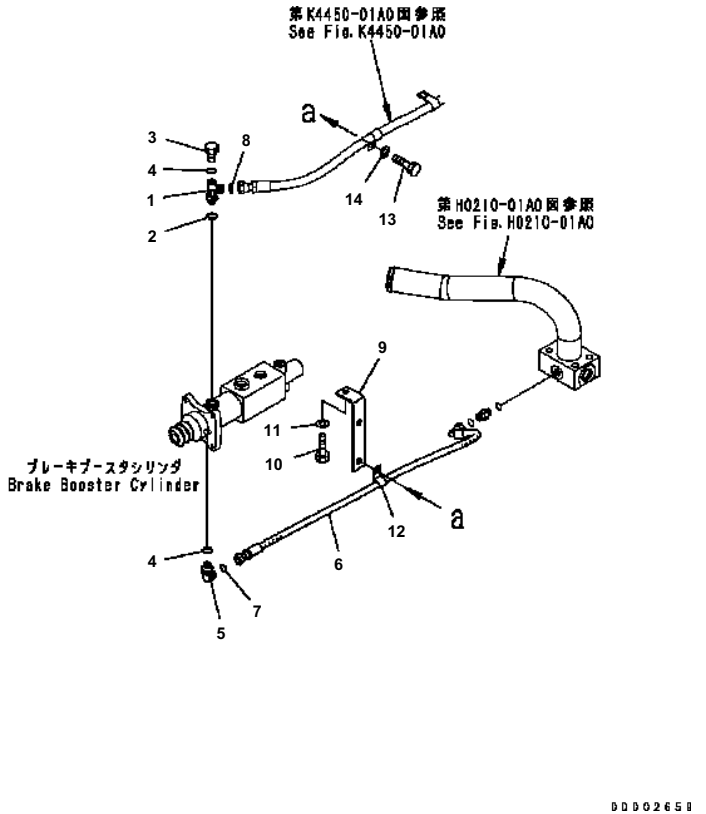

WA200-5 S/N B10001-UP

FLOOR (INCHING BRAKE)

Item	Part No.	Description	Qty	Options
1	419-18-31331	ELBOW	1	SN:B10001--
2	07002-11023	O-RING	1	SN:B10001--
3	07040-11007	PLUG	1	SN:B10001--
4	07000-12011	O-RING	2	SN:B10001--
5	418-T80-3281	ELBOW	1	SN:B10001--
6	417-18-31151	HOSE	1	SN:B10001--
7	02896-11009	O-RING	1	SN:B10001--
8	02896-11009	O-RING	1	SN:B10001--
9	418-18-31131	BRACKET	1	SN:B10001--
10	01010-81020	BOLT	1	SN:B10001--
11	01643-31032	WASHER	1	SN:B10001--
12	04434-51610	CLIP	2	SN:B10001--
13	01010-81020	BOLT	2	SN:B10001--
14	01643-31032	WASHER	2	SN:B10001--

Ref. K0210-13A0 Page 240200

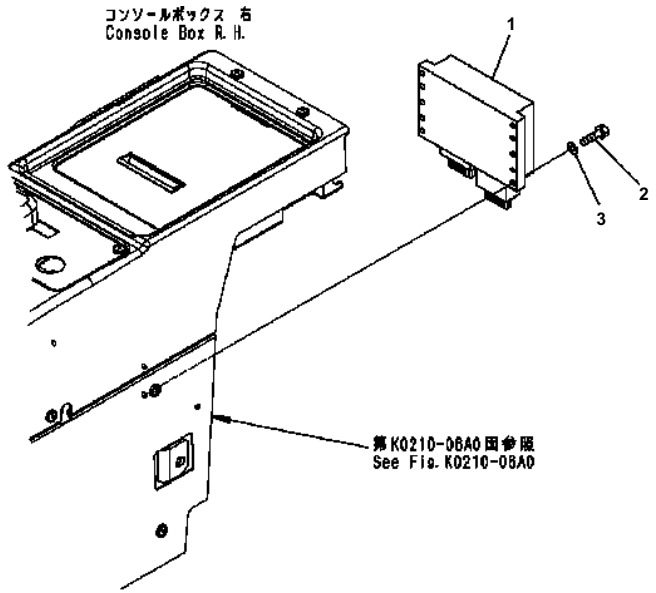

D0010656

WA200-5 S/N B10001-UP

FLOOR (HST CONTROLLER)

Item	Part No.	Description	Qty	Options
1	417-18-31411	CONTROLLER	1	SN:B10001--
2	01010-80625	BOLT	4	SN:B10001--
3	01643-30623	WASHER	4	SN:B10001--

Ref. K0210-14A0 Page 240210

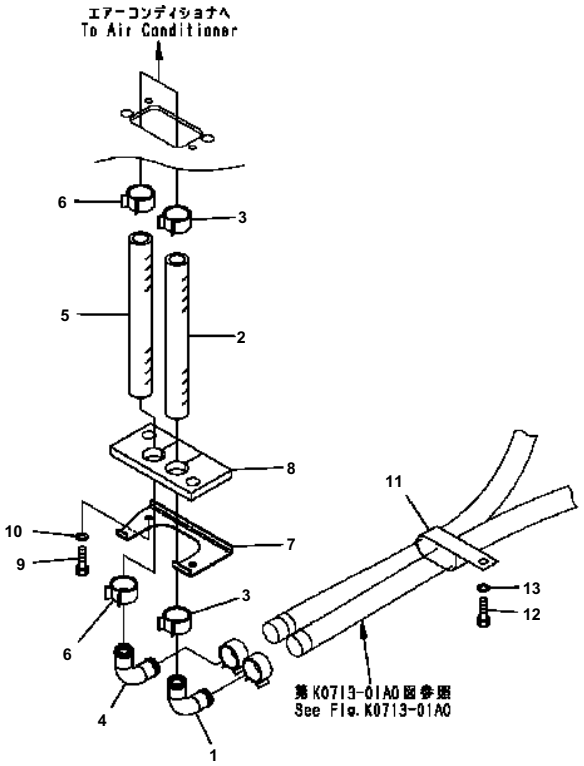

D0D02660

WA200-5 S/N B10001-UP

FLOOR (HEATER PIPING)

Item	Part No.	Description	Qty	Options
1	416-942-1550	ELBOW	1	SN:B10001--
2	09483-10502	HOSE	1	SN:B10001--
3	09479-02400	CLAMP	2	SN:B10001--
4	416-942-1550	ELBOW	1	SN:B10001--
5	09483-10502	HOSE	1	SN:B10001--
6	09479-02400	CLAMP	2	SN:B10001--
7	418-S62-3350	PLATE	1	SN:B10001--
8	418-07-31150	SHEET	1	SN:B10001--
9	01010-80612	BOLT	2	SN:B10001--
10	01643-30623	WASHER	2	SN:B10001--
11	421-07-11550	CLIP	1	SN:B10001--
12	01010-81020	BOLT	1	SN:B10001--
13	01643-31032	WASHER	1	SN:B10001--

Ref. K0210-15A0 Page 240220

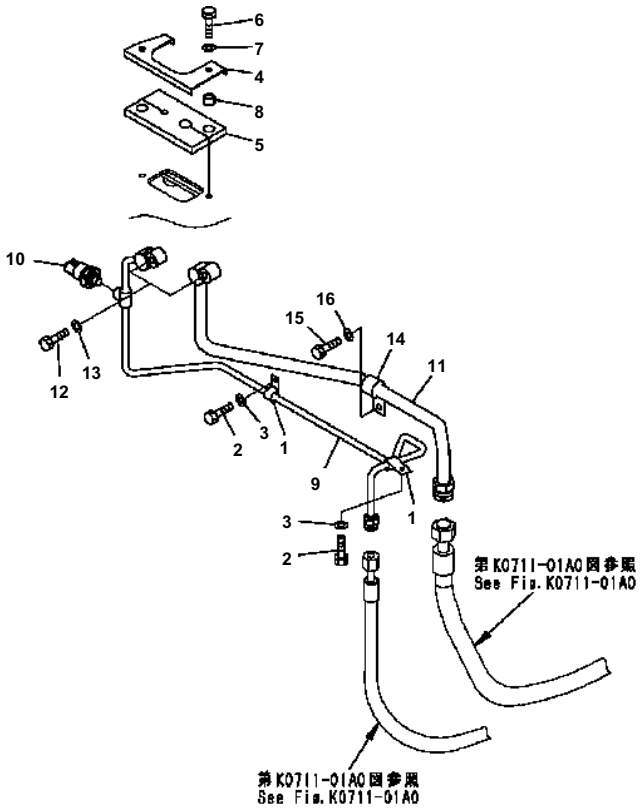

000D2551

WA200-5 S/N B10001-UP

FLOOR (AIR CONDITIONER PIPING)

Item	Part No.	Description	Qty	Options
1	08036-00814	CLIP	2	SN:B10001--
2	01010-81020	BOLT	2	SN:B10001--
3	01643-31032	WASHER	2	SN:B10001--
4	418-S62-3350	PLATE	1	SN:B10001--
5	421-07-23980	SHEET	1	SN:B10001--
6	01010-80630	BOLT	2	SN:B10001--
7	01643-30623	WASHER	2	SN:B10001--
8	421-54-13850	SPACER	2	SN:B10001--
9	418-S62-3211	TUBE	1	SN:B10001--
10	421-07-21810	・ SWITCH	1	SN:B10001--
11	418-S62-3221	TUBE	1	SN:B10001--
12	01010-80630	BOLT	2	SN:B10001--
13	01643-30623	WASHER	2	SN:B10001--
14	04434-51610	CLIP	1	SN:B10001--
15	01010-81020	BOLT	1	SN:B10001--
16	01643-31032	WASHER	1	SN:B10001--

Ref. K0210-16A0 Page 240230

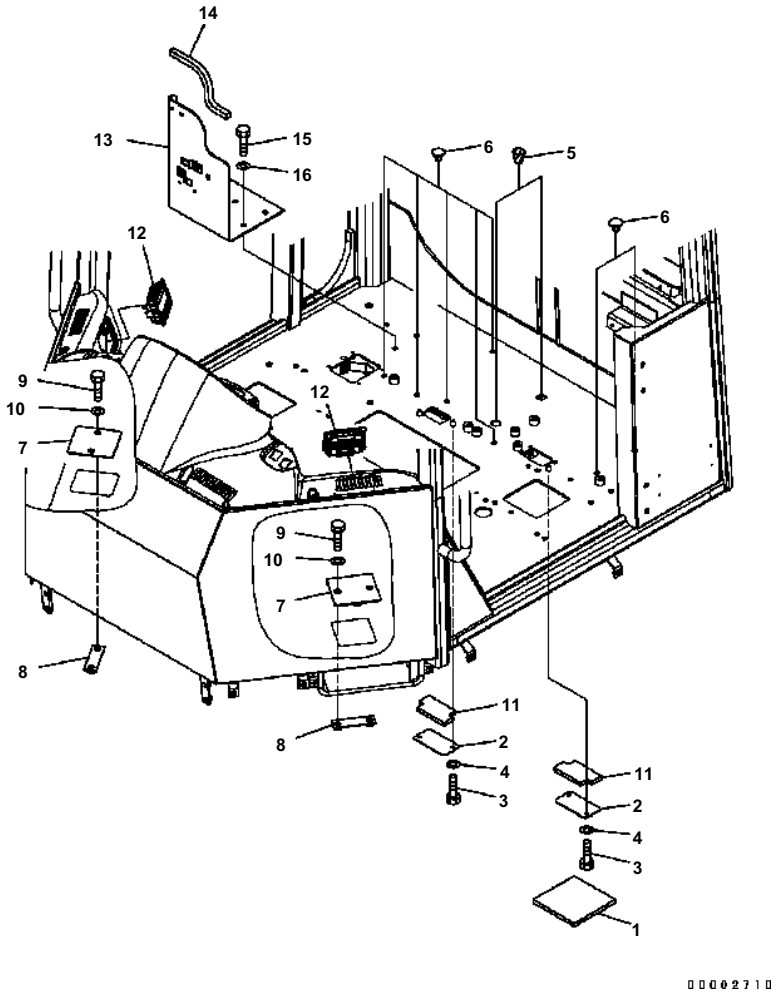

WA200-5 S/N B10001-UP

FLOOR (PLUG) (AIR CONDITIONER LESS) (FOR OPEN CAB)

Item	Part No.	Description	Qty	Options
1	423-950-2120	SHEET	2	SN:B10001--
2	423-950-2130	PLATE	2	SN:B10001--
3	01010-80620	BOLT	4	SN:B10001--
4	01643-30623	WASHER	4	SN:B10001--
5	07049-02734	PLUG	2	SN:B10001--
6	20Y-54-14540	PLUG	7	SN:B10001--
7	418-54-33320	PLATE	2	SN:B10001--
8	418-54-33330	PLATE	4	SN:B10001--
9	01010-81230	BOLT	4	SN:B10001--
10	01643-31232	WASHER	4	SN:B10001--
11	418-54-33390	SEAL	1	SN:B10001--
12	421-925-3460	GRILLE ASS'Y	2	SN:B10001--
13	418-54-33341	BOX	1	SN:B10001--
14	23S-54-53420	FINISHER	1	SN:B10001--
15	01010-81020	BOLT	3	SN:B10001--
16	01643-31032	WASHER	3	SN:B10001--

Ref. K0210-16A9 Page 240240

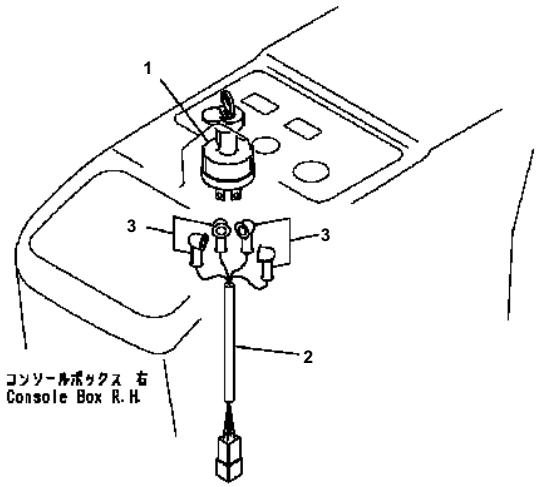

00002584

WA200-5 S/N B10001-UP

FLOOR (ELECTRICAL) (STARTING SWITCH) (EXCEPT JAPAN)

Item	Part No.	Description	Qty	Options
1	08086-20100	SWITCH	1	SN:B10001--
2	418-06-32111	WIRING HARNESS	1	SN:B10001--
3	08038-00518	CAP	4	SN:B10001--

Ref. K0210-17A5 Page 240250

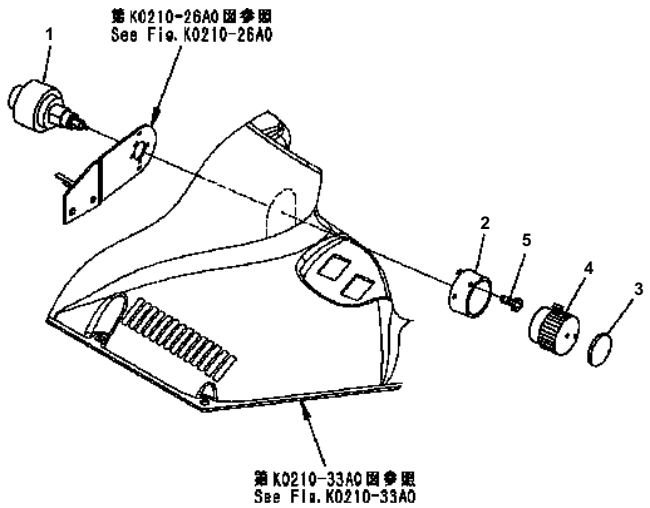

00D10551

WA200-5 S/N B10001-UP

FLOOR (WIPER SWITCH)

Item	Part No.	Description	Qty	Options
	421-06-26110	SWITCH ASS'Y	1	SN:B10001--
1	421-06-26120	· SWITCH	1	SN:B10001--
2	421-06-26130	· COLLAR	1	SN:B10001--
3	421-06-26140	· CAP	1	SN:B10001--
4	421-06-26150	· KNOB	1	SN:B10001--
5	421-06-26160	SCREW	2	SN:B10001--

Ref. K0210-18A0 Page 240260

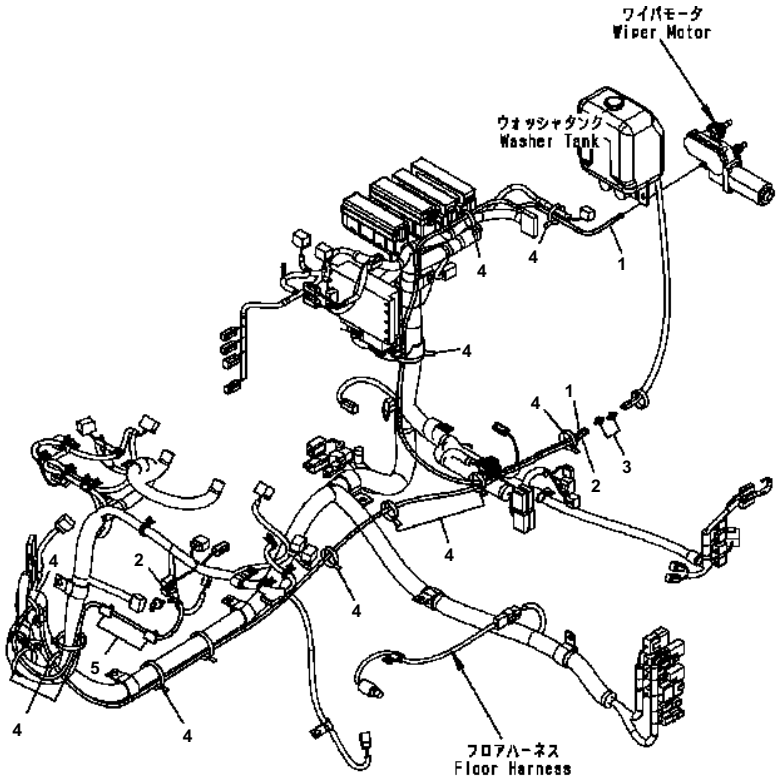

WA200-5 S/N B10001-UP

FLOOR (WASHER HOSE)

Item	Part No.	Description	Qty	Options
1	418-07-36111	HOSE	1	SN:B10001--
2	418-07-36140	HOSE	1	SN:B10001--
3	421-07-15110	JOINT	2	SN:B10001--
4	08034-40521	BAND	12	SN:B10001--
5	421-54-15520	CLIP	2	SN:B10001--

Ref. K0210-19A0 Page 240270

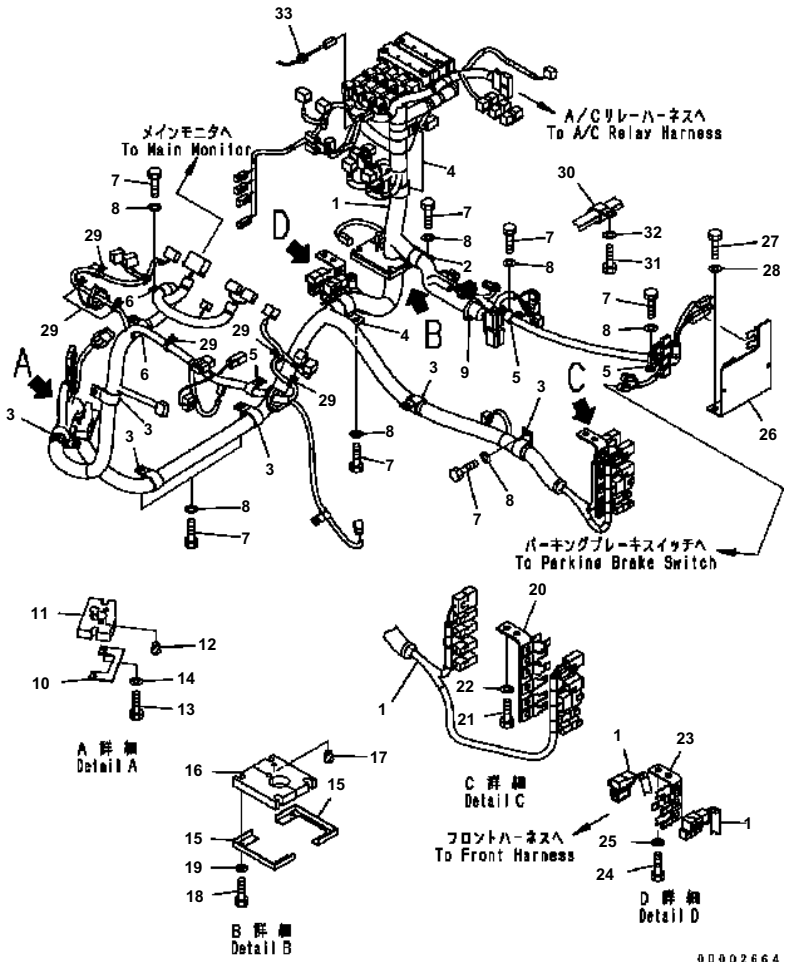

WA200-5 S/N B10001-UP

FLOOR (FLOOR HARNESS) (MAIN HARNESS)

Item	Part No.	Description	Qty	Options
1	418-06-32484	WIRING HARNESS	1	SN:B10119--
	418-06-32483	WIRING HARNESS	1	SN:B10001--B10118
	20Y-06-25240	・ DIODE¤ 1.5A	1	SN:B10001--
	20Y-06-25250	・ DIODE¤ 1.5A	2	SN:B10001--
	20Y-06-25260	・ DIODE¤ 1.5A	1	SN:B10001--
	283-06-16110	・ BOX	2	SN:B10001--
	283-06-16160	・ TERMINAL	60	SN:B10001--
	418-06-35210	・ DIODE¤ 3A	9	SN:B10119--
	418-06-35210	・ DIODE¤ 3A	10	SN:B10001--B10118
	418-06-35220	・ DIODE¤ 1.5A	3	SN:B10119--
	418-06-35220	・ DIODE¤ 1.5A	4	SN:B10001--B10118
2	04434-53212	CLIP	1	SN:B10001--
3	04434-53412	CLIP	6	SN:B10001--
4	23S-62-25850	CLIP	3	SN:B10001--
5	04434-51912	CLIP	3	SN:B10001--
6	04434-52312	CLIP	2	SN:B10001--
7	01010-81016	BOLT	15	SN:B10001--
8	01643-31032	WASHER	15	SN:B10001--
9	08034-20519	BAND	8	SN:B10001--
10	417-06-22410	PLATE	1	SN:B10001--
11	418-06-32452	SHEET	1	SN:B10001--
12	07049-01012	PLUG	1	SN:B10001--
13	01010-80625	BOLT	2	SN:B10001--
14	01643-30623	WASHER	2	SN:B10001--
15	418-06-31610	PLATE	2	SN:B10001--
16	418-06-31640	SHEET	1	SN:B10001--
17	07049-01012	PLUG	1	SN:B10001--
18	01010-80625	BOLT	4	SN:B10094--
19	01643-30623	WASHER	4	SN:B10094--
	01010-80612	BOLT	4	SN:B10001--B10093
	01643-30623	WASHER	4	SN:B10001--B10093
20	419-06-31333	BRACKET	1	SN:B10001--
21	01010-81016	BOLT	2	SN:B10001--
22	01643-31032	WASHER	2	SN:B10001--
23	419-06-31343	BRACKET	1	SN:B10001--
24	01010-81016	BOLT	2	SN:B10001--
25	01643-31032	WASHER	2	SN:B10001--
26	418-06-31381	BRACKET	1	SN:B10001--
27	01010-81025	BOLT	2	SN:B10001--
28	01643-31032	WASHER	2	SN:B10001--

Ref. K0210-20A5 Page 240280

FLOOR (FLOOR HARNESS) (MAIN HARNESS)

Item	Part No.	Description	Qty	Options
29	08059-00310	CLIP	20	SN:B10001--
30	04434-53412	CLIP	1	SN:B10001--
31	01010-81020	BOLT	1	SN:B10001--
32	01643-31032	WASHER	1	SN:B10001--
33	417-06-12560	GROMMET	1	SN:B10001--

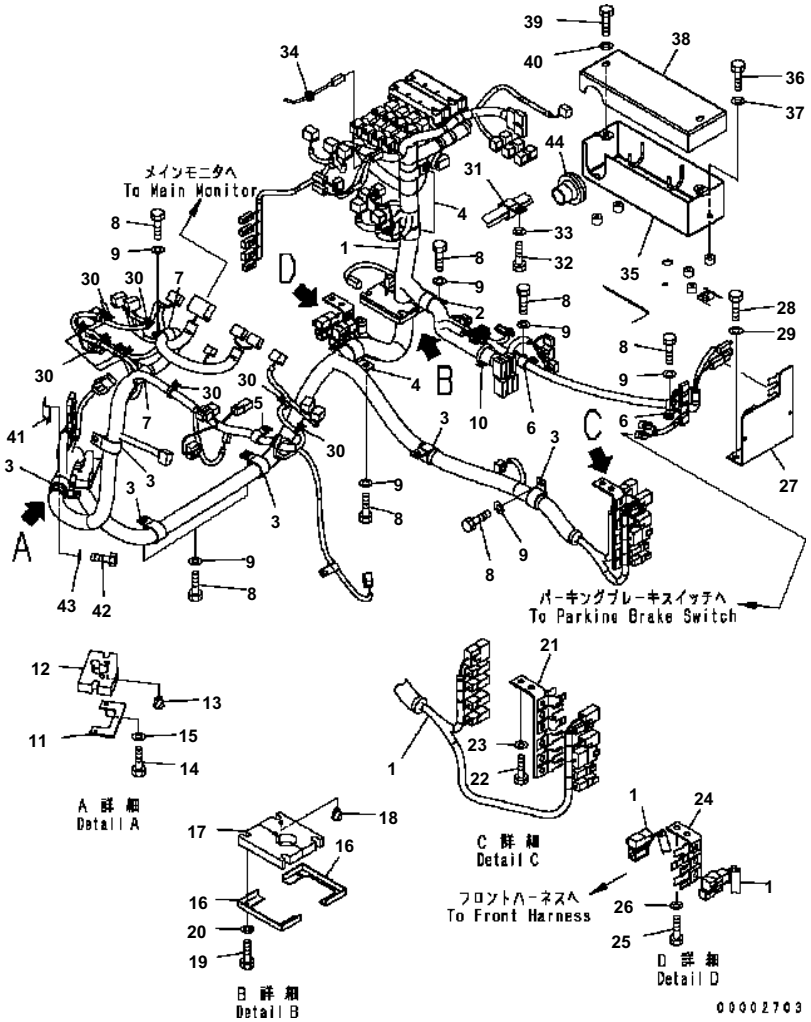

FLOOR (FLOOR HARNESS) (MAIN HARNESS) (FOR OPEN CAB)

Item	Part No.	Description	Qty	Options
1	418-06-32484	WIRING HARNESS	1	SN:B10119--
	418-06-32483	WIRING HARNESS	1	SN:B10001--B10118
	20Y-06-25240	・DIODE¤ 1.5A	1	SN:B10001--
	20Y-06-25250	・DIODE¤ 1.5A	2	SN:B10001--
	20Y-06-25260	・DIODE¤ 1.5A	1	SN:B10001--
	283-06-16110	・BOX	2	SN:B10001--
	283-06-16160	・TERMINAL	60	SN:B10001--
	418-06-35210	・DIODE¤ 3A	9	SN:B10119--
	418-06-35210	・DIODE¤ 3A	10	SN:B10001--B10118
	418-06-35220	・DIODE¤ 1.5A	3	SN:B10119--
	418-06-35220	・DIODE¤ 1.5A	4	SN:B10001--B10118
2	04434-53212	CLIP	1	SN:B10001--
3	04434-53412	CLIP	6	SN:B10001--
4	23S-62-25850	CLIP	3	SN:B10001--
5	04434-51912	CLIP	2	SN:B10001--
6	04434-51912	CLIP	1	SN:B10001--
7	04434-52312	CLIP	2	SN:B10001--
8	01010-81016	BOLT	15	SN:B10001--
9	01643-31032	WASHER	15	SN:B10001--
10	08034-20519	BAND	8	SN:B10001--
11	417-06-22410	PLATE	1	SN:B10001--
12	418-06-32452	SHEET	1	SN:B10001--
13	07049-01012	PLUG	1	SN:B10001--
14	01010-80625	BOLT	2	SN:B10001--
15	01643-30623	WASHER	2	SN:B10001--
16	418-06-31610	PLATE	2	SN:B10001--
17	418-06-31640	SHEET	1	SN:B10001--
18	07049-01012	PLUG	1	SN:B10001--
19	01010-80625	BOLT	4	SN:B10094--
20	01643-30623	WASHER	4	SN:B10094--
	01010-80612	BOLT	4	SN:B10001--B10093
	01643-30623	WASHER	4	SN:B10001--B10093
21	419-06-31333	BRACKET	1	SN:B10001--
22	01010-81016	BOLT	2	SN:B10001--
23	01643-31032	WASHER	2	SN:B10001--
24	419-06-31343	BRACKET	1	SN:B10001--
25	01010-81016	BOLT	2	SN:B10001--
26	01643-31032	WASHER	2	SN:B10001--
27	418-06-31381	BRACKET	1	SN:B10001--

WA200-5 S/N B10001-UP

FLOOR (FLOOR HARNESS) (MAIN HARNESS) (FOR OPEN CAB)

Item	Part No.	Description	Qty	Options
28	01010-81025	BOLT	2	SN:B10001--
29	01643-31032	WASHER	2	SN:B10001--
30	08059-00310	CLIP	18	SN:B10001--
31	04434-53412	CLIP	1	SN:B10001--
32	01010-81020	BOLT	1	SN:B10001--
33	01643-31032	WASHER	1	SN:B10001--
34	417-06-12560	GROMMET	1	SN:B10001--
35	418-54-33350	COVER	1	SN:B10001--
36	01010-81020	BOLT	4	SN:B10001--
37	01643-31032	WASHER	4	SN:B10001--
38	418-54-33360	COVER	1	SN:B10001--
39	01010-81020	BOLT	2	SN:B10001--
40	01643-31032	WASHER	2	SN:B10001--
41	08193-21012	CLIP	1	SN:B10001--
42	01010-81020	BOLT	1	SN:B10001--
43	01643-31032	WASHER	1	SN:B10001--
44	08037-13550	GROMMET	1	SN:B10001--

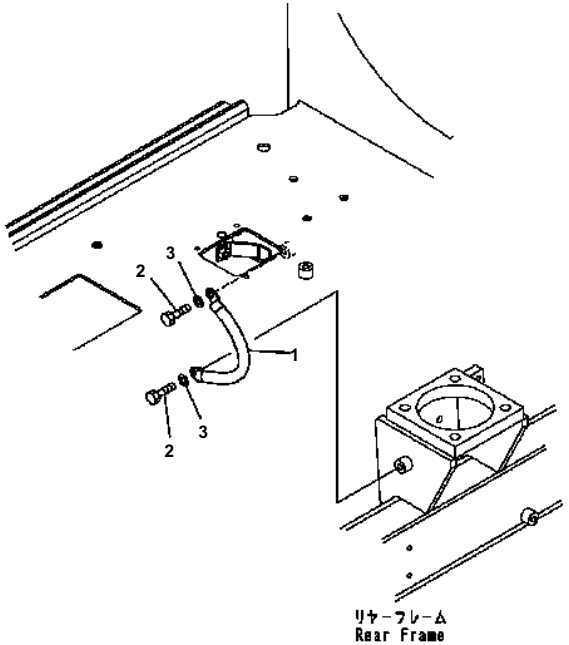

00002565

WA200-5 S/N B10001-UP

FLOOR (EARTH)

Item	Part No.	Description	Qty	Options
1	08028-AB030	CABLE	1	SN:B10001--
2	01010-81016	BOLT	2	SN:B10001--
3	01643-31032	WASHER	2	SN:B10001--

Ref. K0210-21A0 Page 240300

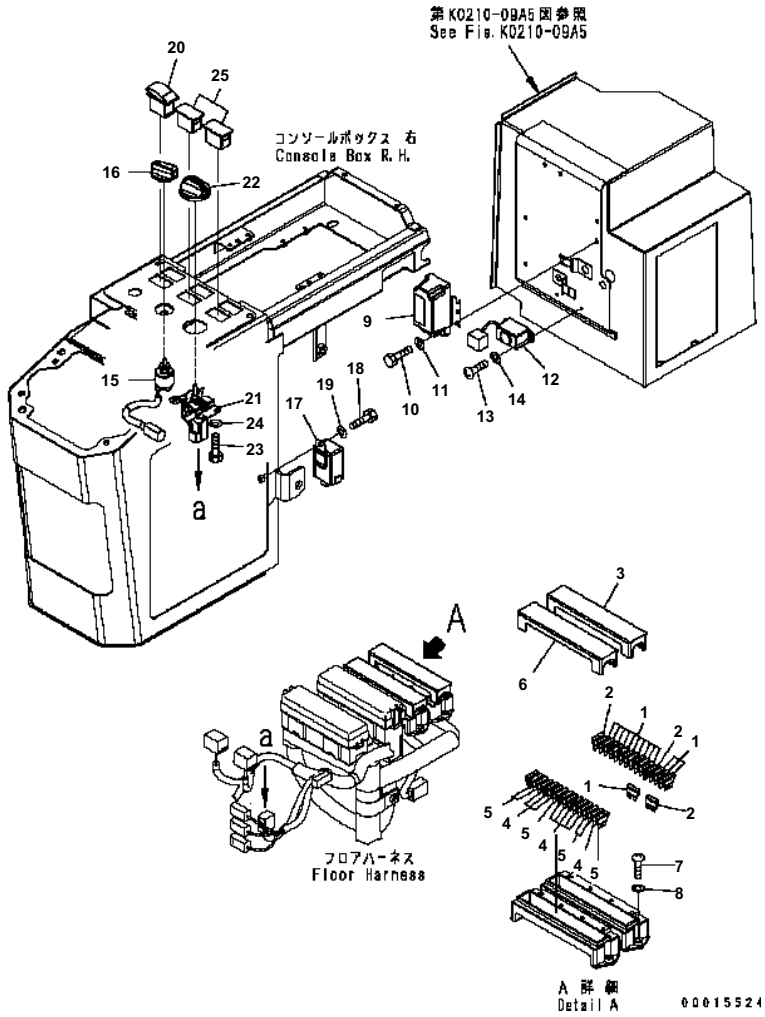

WA200-5 S/N B10001-UP

FLOOR (ELECTRICAL PARTS) (E.C.S.S LESS)

Item	Part No.	Description	Qty	Options
1	283-06-16190	FUSE¤ 10A	14	SN:B10001--
2	22W-06-13160	FUSE¤ 20A	3	SN:B10001--
3	283-06-16120	COVER	1	SN:B10001--
4	283-06-16190	FUSE¤ 10A	9	SN:B10001--
5	22W-06-13160	FUSE¤ 20A	6	SN:B10001--
6	283-06-16120	COVER	1	SN:B10001--
7	01220-40520	SCREW	4	SN:B10001--
8	01641-20508	WASHER	4	SN:B10001--
9	421-06-26220	RELAY	1	SN:B10001--
10	01010-80610	BOLT	2	SN:B10001--
11	01643-30623	WASHER	2	SN:B10001--
12	23S-05-35320	BUZZER	1	SN:B10001--
13	01220-40412	SCREW	2	SN:B10001--
14	01641-20405	WASHER	2	SN:B10001--
15	421-06-36232	SWITCH	1	SN:B10001--
16	421-06-36241	KNOB	1	SN:B10001--
17	416-06-22250	FLASHER	1	SN:B10001--
18	01010-80612	BOLT	2	SN:B10001--
19	01643-30623	WASHER	2	SN:B10001--
20	418-06-36370	SWITCH {TRACTION CONTROL}	1	SN:B10001--
21	22U-06-22420	POTENTIOMETER ASS'Y	1	SN:B10001--
22	22U-06-22470	KNOB	1	SN:B10001--
23	01010-80612	BOLT	2	SN:B10001--
24	01643-30623	WASHER	2	SN:B10001--
25	418-06-36230	PLUG	1	SN:B10001--

Ref. K0210-22A5 Page 240310

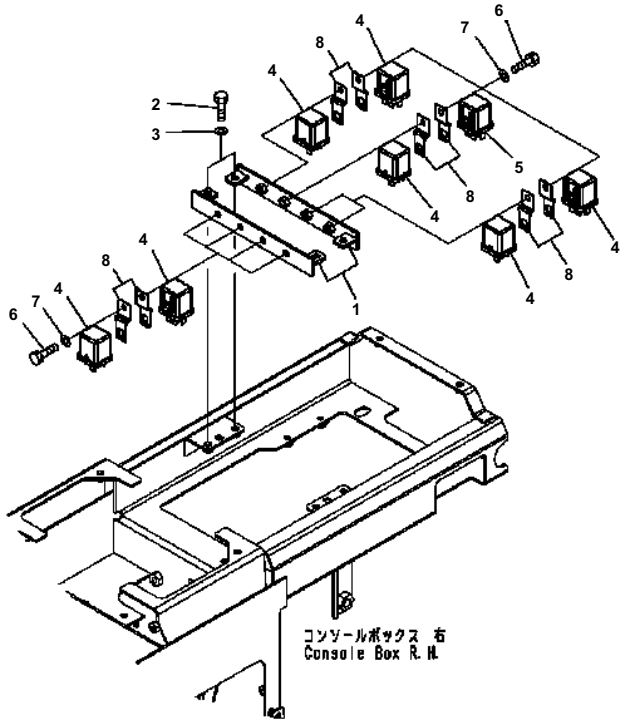

DD002685

WA200-5 S/N B10001-UP

FLOOR (RELAY) (R.H. CONSOLE)

Item	Part No.	Description	Qty	Options
1	418-54-32990	BRACKET	2	SN:B10001--
2	01010-80616	BOLT	4	SN:B10001--
3	01643-30623	WASHER	4	SN:B10001--
4	569-06-61960	RELAY	15	SN:B10001--
5	569-06-61970	RELAY	1	SN:B10001--
6	01010-80616	BOLT	8	SN:B10001--
7	01643-30623	WASHER	8	SN:B10001--
8	287-06-16420	BRACKET	16	SN:B10001--

Ref. K0210-23A0 Page 240320

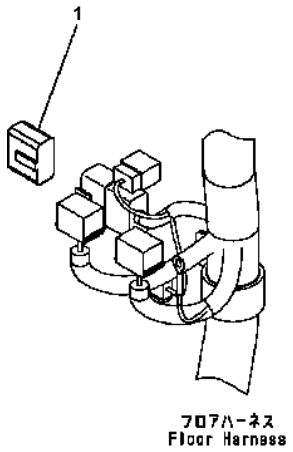

00002566

WA200-5 S/N B10001-UP

FLOOR (WIRING HARNESS) (PLUG)

Item	Part No.	Description	Qty	Options
1	418-06-31490	WIRING HARNESS	1	SN:B10001--

Ref. K0210-25A2 Page 240340

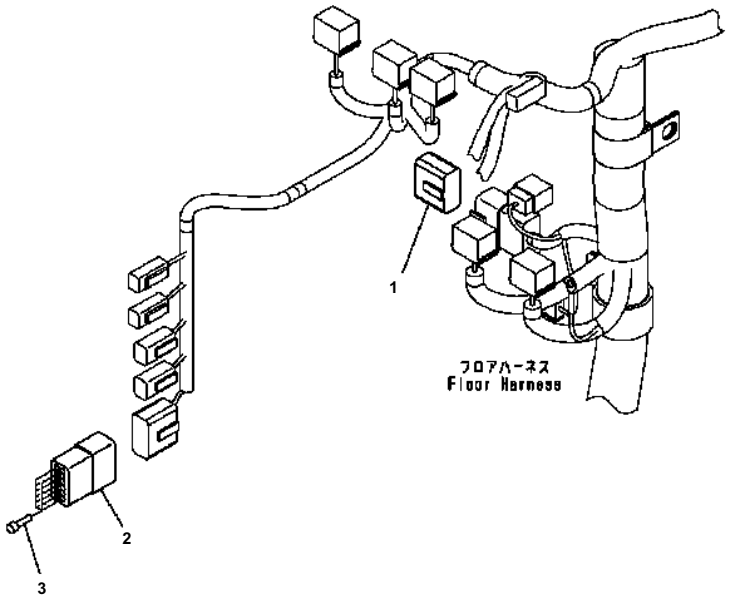

WA200-5 S/N B10001-UP

FLOOR (WIRING HARNESS) (PLUG)

Item	Part No.	Description	Qty	Options
1	418-06-31490	WIRING HARNESS	1	SN:B10001--
2	421-06-31510	CONNECTOR	1	SN:B10001--
3	08191-00770	PLUG	12	SN:B10001--

Ref. K0210-25A5 Page 240350

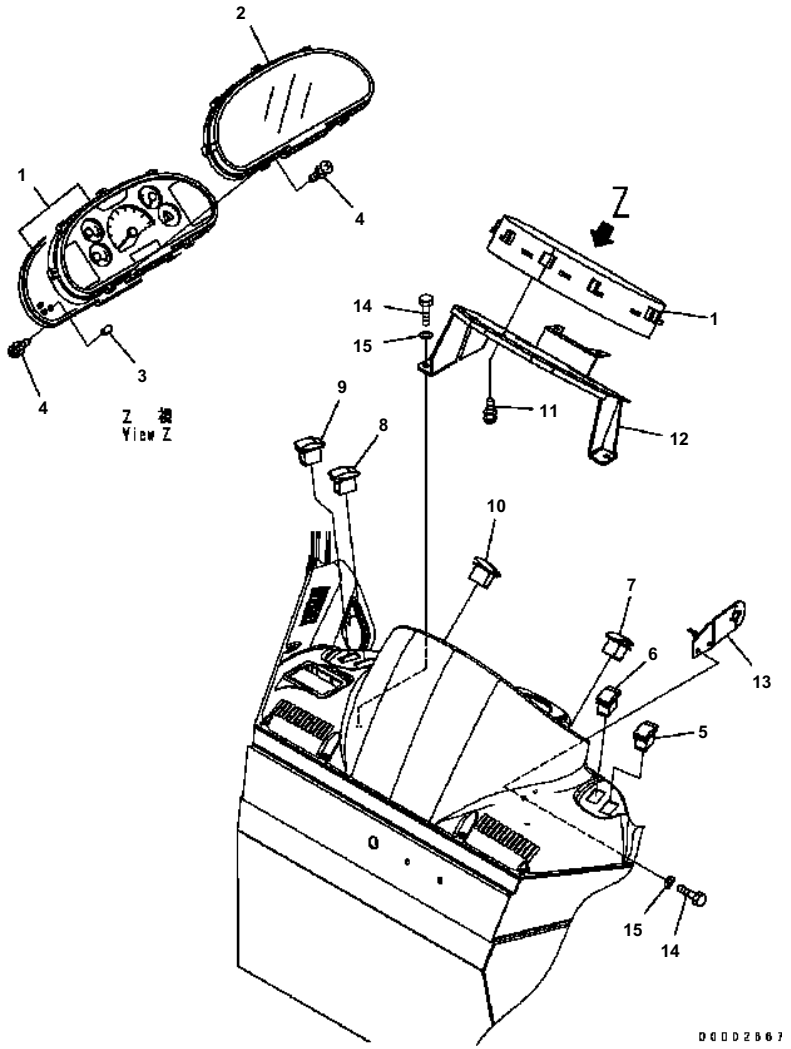

WA200-5 S/N B10001-UP

FLOOR (MAIN MONITOR)

Item	Part No.	Description	Qty	Options
1	418-06-35115	MONITOR	1	SN:B10109--
	418-06-35114	MONITOR	1	SN:B10001--B10108
2	418-06-35140	· GLASS	1	SN:B10001--
3	418-06-35150	· VALVE	20	SN:B10001--
4	418-06-35160	· SCREW	14	SN:B10001--
5	418-06-36310	SWITCH {FRONT WORK LAMP}	1	SN:B10001--
6	418-06-36320	SWITCH {REAR WORK LAMP}	1	SN:B10001--
7	418-06-36330	SWITCH {HAZARD}	1	SN:B10001--
8	418-06-36340	SWITCH {MODE¤ 1}	1	SN:B10001--
9	418-06-36350	SWITCH {MODE¤ 2}	1	SN:B10001--
10	418-06-36230	PLUG	2	SN:B10001--
11	01023-20616	SCREW	6	SN:B10001--
12	418-926-3613	SUPPORT	1	SN:B10001--
13	418-926-3652	BRACKET	1	SN:B10001--
14	01010-80620	BOLT	8	SN:B10001--
15	01643-30623	WASHER	8	SN:B10001--

Ref. K0210-26A2 Page 240360

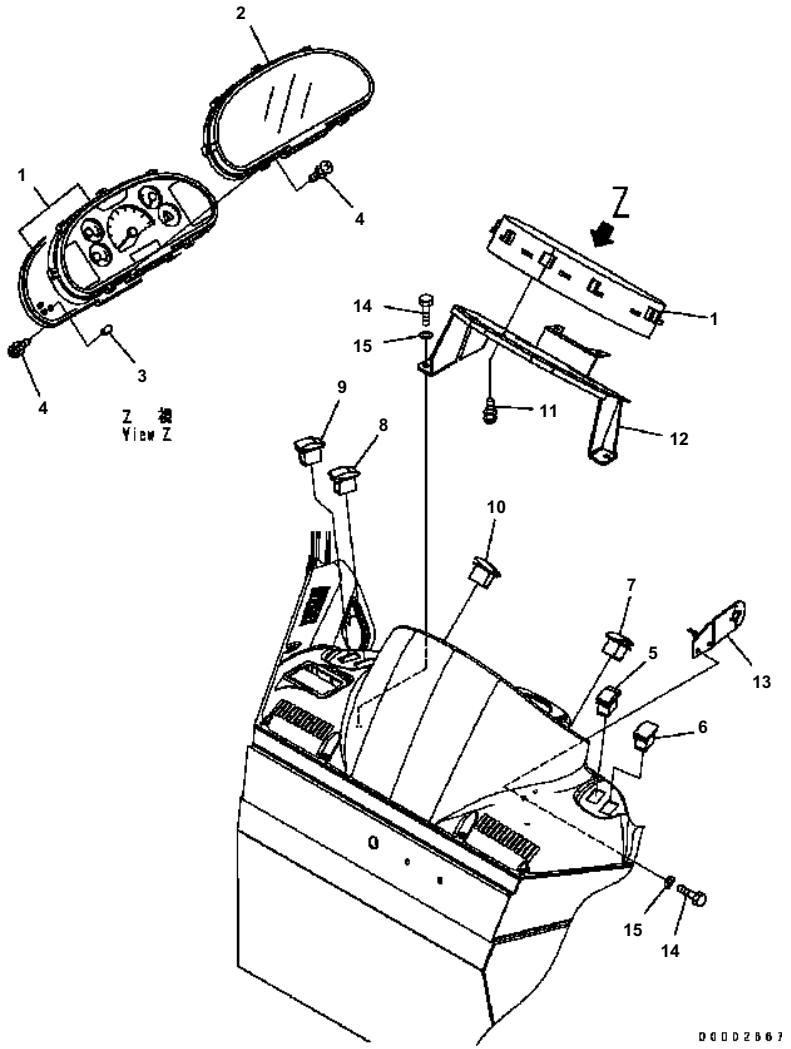

WA200-5 S/N B10001-UP

FLOOR (MAIN MONITOR) (FOR OPEN CAB)

Item	Part No.	Description	Qty	Options
1	418-06-35115	MONITOR	1	SN:B10109--
	418-06-35114	MONITOR	1	SN:B10001--B10108
2	418-06-35140	· GLASS	1	SN:B10001--
3	418-06-35150	· VALVE	20	SN:B10001--
4	418-06-35160	· SCREW	14	SN:B10001--
5	418-06-36320	SWITCH {REAR WORK LAMP}	1	SN:B10001--
6	418-06-36230	COVER	1	SN:B10001--
7	418-06-36330	SWITCH {HAZARD}	1	SN:B10001--
8	418-06-36340	SWITCH {MODE¤ 1}	1	SN:B10001--
9	418-06-36350	SWITCH {MODE¤ 2}	1	SN:B10001--
10	418-06-36230	PLUG	2	SN:B10001--
11	01023-20616	SCREW	6	SN:B10001--
12	418-926-3613	SUPPORT	1	SN:B10001--
13	418-926-3652	BRACKET	1	SN:B10001--
14	01010-80620	BOLT	8	SN:B10001--
15	01643-30623	WASHER	8	SN:B10001--

Ref. K0210-26A9 Page 240370

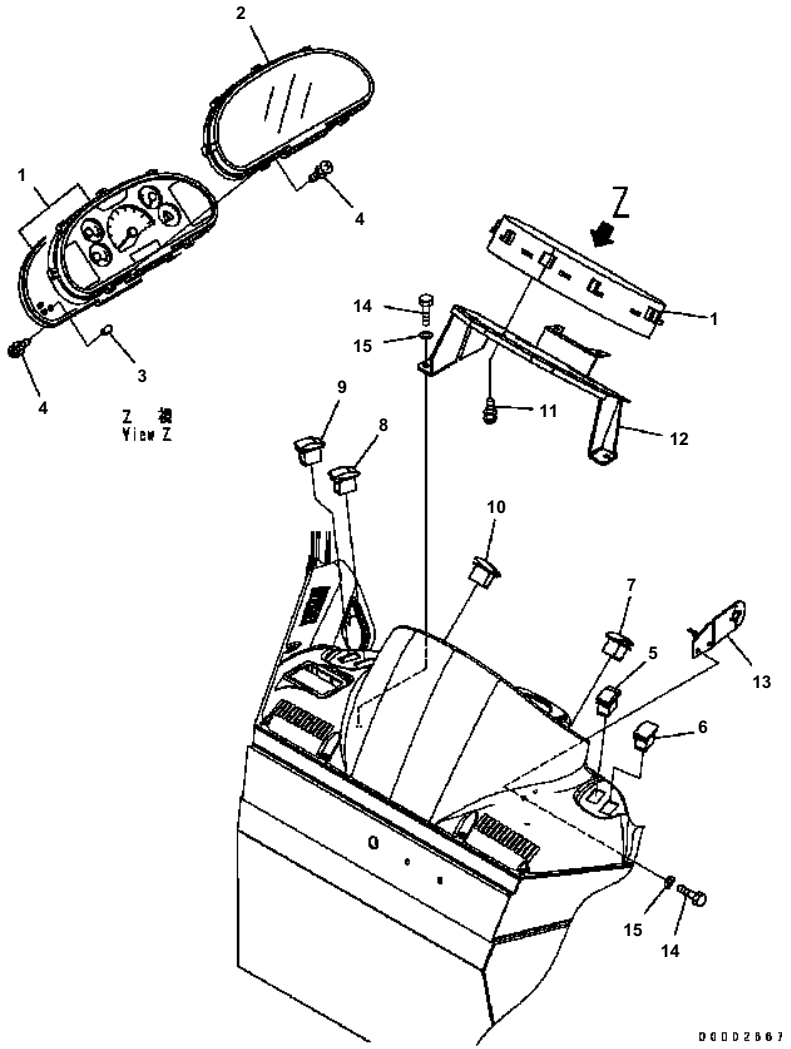

WA200-5 S/N B10001-UP

FLOOR (MAIN MONITOR) (FOR OPEN CAB) (WITH WORK LAMP SWITCH)

Item	Part No.	Description	Qty	Options
1	418-06-35115	MONITOR	1	SN:B10109--
	418-06-35114	MONITOR	1	SN:B10001--B10108
2	418-06-35140	· GLASS	1	SN:B10001--
3	418-06-35150	· VALVE	20	SN:B10001--
4	418-06-35160	· SCREW	14	SN:B10001--
5	418-06-36320	SWITCH {REAR WORK LAMP}	1	SN:B10001--
6	418-06-36310	SWITCH	1	SN:B10001--
7	418-06-36330	SWITCH {HAZARD}	1	SN:B10001--
8	418-06-36340	SWITCH {MODE¤ 1}	1	SN:B10001--
9	418-06-36350	SWITCH {MODE¤ 2}	1	SN:B10001--
10	418-06-36230	PLUG	2	SN:B10001--
11	01023-20616	SCREW	6	SN:B10001--
12	418-926-3613	SUPPORT	1	SN:B10001--
13	418-926-3652	BRACKET	1	SN:B10001--
14	01010-80620	BOLT	8	SN:B10001--
15	01643-30623	WASHER	8	SN:B10001--

Ref. K0210-26B0 Page 240371

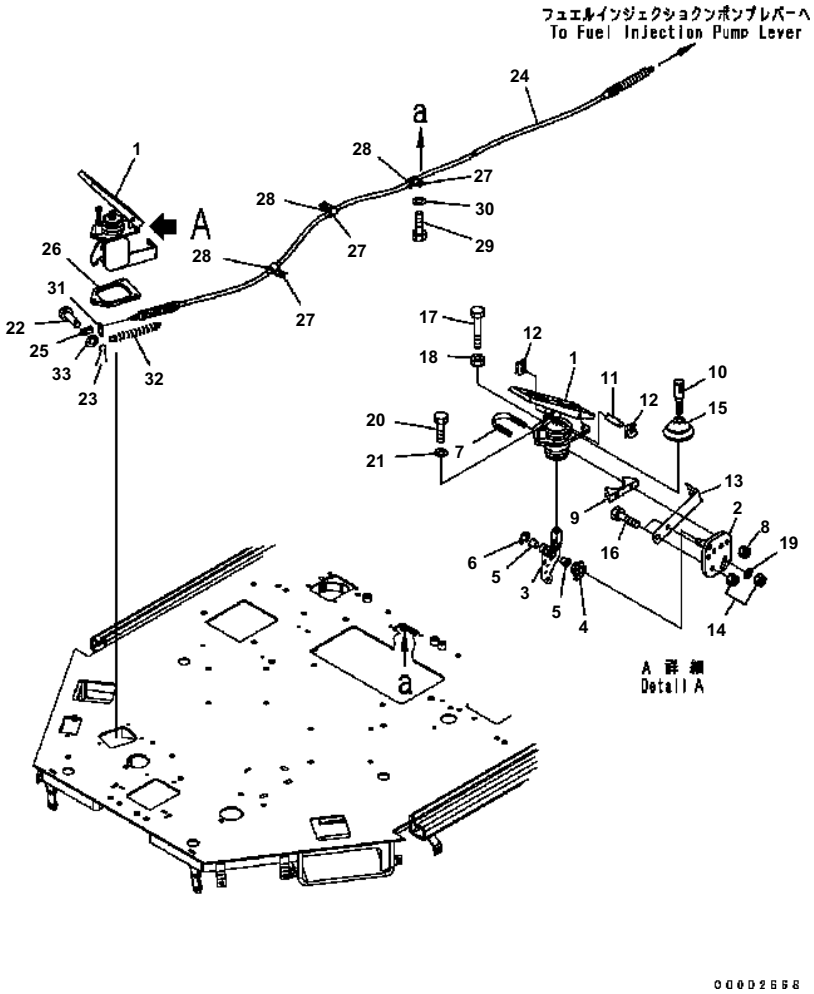

WA200-5 S/N B10001-UP

FLOOR (ENGINE CONTROLLER)

Item	Part No.	Description	Qty	Options
	417-43-31120	PEDAL ASS'Y	1	SN:B10001--
1	417-43-11210	· PEDAL AND BODY A.	1	SN:B10001--
2	417-43-11220	· PLATE	1	SN:B10001--
3	417-43-11230	· LEVER	1	SN:B10001--
4	417-43-11240	· SPRING	1	SN:B10001--
5	417-43-11250	· BEARING	2	SN:B10001--
6	417-43-11260	· CLIP	1	SN:B10001--
7	417-43-11270	· U-BOLT	1	SN:B10001--
8	417-43-11280	· NUT	2	SN:B10001--
9	417-43-11290	· SUPPORT	1	SN:B10001--
10	417-43-11310	· ROD	1	SN:B10001--
11	417-43-11320	· PIN	1	SN:B10001--
12	417-43-11330	· CLIP	2	SN:B10001--
13	417-43-11340	· SUPPORT	1	SN:B10001--
14	417-43-11350	· NUT	2	SN:B10001--
15	417-43-11360	· BOOT	1	SN:B10001--
16	01010-80616	· BOLT	2	SN:B10001--
17	01016-50870	· BOLT	1	SN:B10001--
18	01580-10806	· NUT	1	SN:B10001--
19	01643-30623	· WASHER	1	SN:B10001--
20	01010-D0630	BOLT	3	SN:B10001--
21	01643-70623	WASHER	3	SN:B10001--
22	04205-10620	PIN	1	SN:B10001--
23	04050-11612	PIN	1	SN:B10001--
24	417-43-31111	CABLE ASS'Y	1	SN:B10001--
25	04210-20624	YOKE	1	SN:B10001--
26	421-43-31510	PLATE	1	SN:B10001--
27	04434-52110	CLIP	3	SN:B10001--
28	425-43-11180	GROMMET	3	SN:B10001--
29	01010-81016	BOLT	3	SN:B10001--
30	01643-31032	WASHER	3	SN:B10001--
31	424-43-11170	PLATE	1	SN:B10001--
32	418-43-18240	SPRING	1	SN:B10001--
33	01640-20610	WASHER	1	SN:B10001--

Ref. K0210-27A0 Page 240380

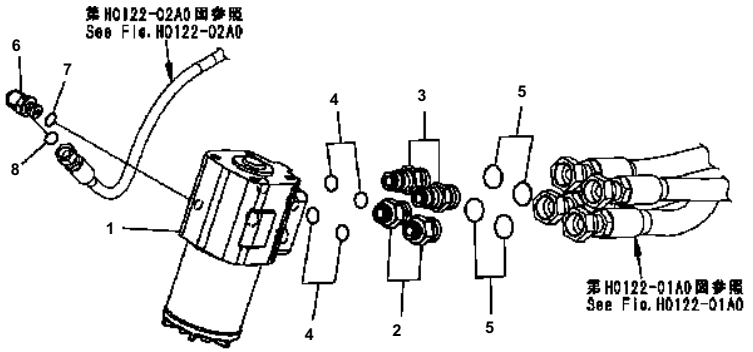

GD002595

WA200-5 S/N B10001-UP

STEERING DEMAND VALVE

Item	Part No.	Description	Qty	Options
1	417-64-35101	VALVE ASS'Y {ORBITROL}	1	SN:B10001--
2	417-62-31120	NIPPLE	2	SN:B10001--
3	417-62-31110	NIPPLE	2	SN:B10001--
4	415-62-11560	O-RING	4	SN:B10001--
5	02896-11012	O-RING	4	SN:B10001--
6	418-62-32162	ELBOW	1	SN:B10001--
7	416-62-11480	O-RING	1	SN:B10001--
8	02896-11008	O-RING	1	SN:B10001--

Ref. K0210-28A0 Page 240390

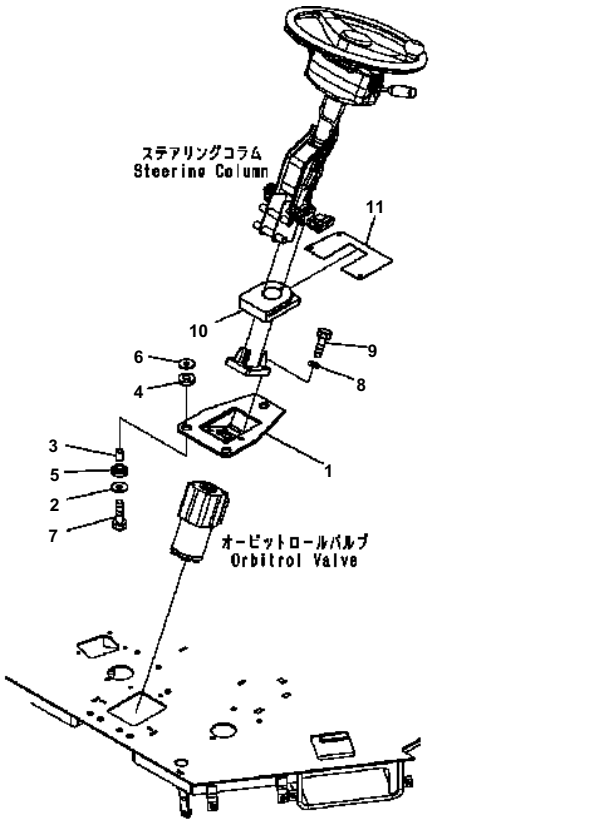

00002561

WA200-5 S/N B10001-UP

STEERING WHEEL (VALVE MOUNT)

Item	Part No.	Description	Qty	Options
1	418-40-32131	BRACKET	1	SN:B10001--
2	419-43-17920	WASHER	3	SN:B10001--
3	417-62-14130	SPACER	3	SN:B10001--
4	417-62-13620	CUSHION	3	SN:B10001--
5	419-43-17930	CUSHION	3	SN:B10001--
6	419-43-17920	WASHER	3	SN:B10001--
7	01010-81255	BOLT	3	SN:B10001--
8	01643-31032	WASHER	4	SN:B10001--
9	01010-81040	BOLT	4	SN:B10001--
10	418-40-32142	SEAL	1	SN:B10001--
11	418-40-32210	PLATE	1	SN:B10001--

Ref. K0210-29A0 Page 240400

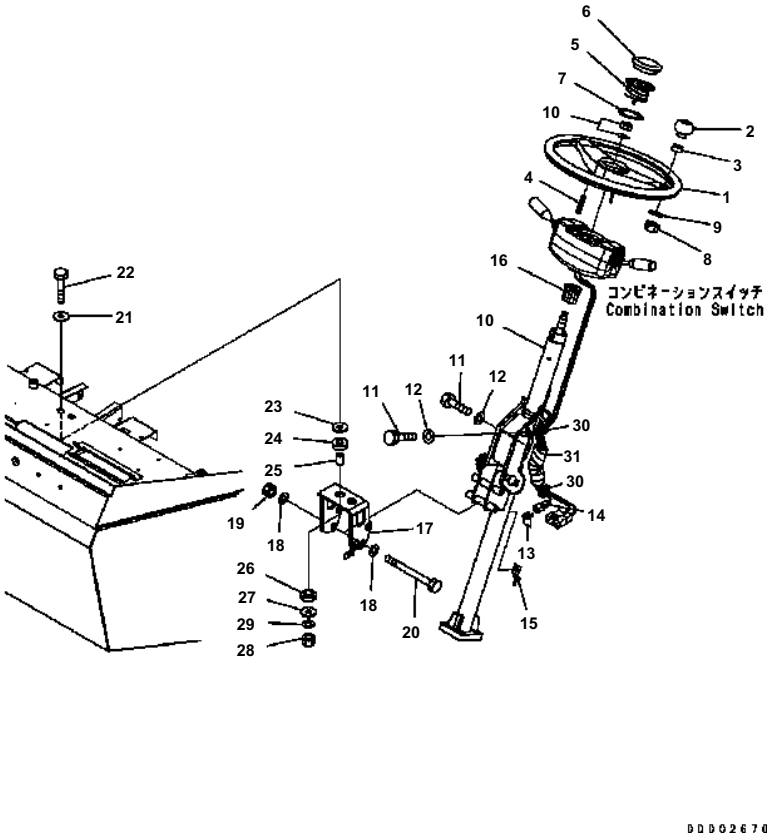

WA200-5 S/N B10001-UP

STEERING WHEEL (COLUMN AND ORBITROL)

Item	Part No.	Description	Qty	Options
	421-40-22110	WHEEL ASS'Y	1	SN:B10001--
1	421-40-22120	· WHEEL	1	SN:B10001--
2	421-40-22140	· KNOB ASS'Y	1	SN:B10001--
3	421-40-22150	· BUSHING	1	SN:B10001--
4	421-40-22160	· PIN	1	SN:B10001--
5	421-40-22170	· CONTACT ASS'Y	1	SN:B10001--
6	421-40-22180	· PAD	1	SN:B10001--
7	421-40-22210	· SPRING LOCK	1	SN:B10001--
8	362-43-15210	· NUT	1	SN:B10001--
9	362-43-15220	· WASHER	1	SN:B10001--
10	418-40-32113	COLUMN ASS'Y	1	SN:B10001--
11	01050-51030	· BOLT	3	SN:B10001--
12	01602-21030	· WASHER	3	SN:B10001--
13	08191-00770	· PLUG	1	SN:B10001--
14	08192-22830	· CONNECTOR	1	SN:B10001--
15	08193-21012	· CLIP	1	SN:B10001--
16	418-40-32180	· BUSHING	1	SN:B10001--
17	418-40-32125	PLATE	1	SN:B10001--
18	01643-31032	WASHER	4	SN:B10001--
19	01596-01009	NUT	2	SN:B10001--
20	01011-81035	BOLT	2	SN:B10001--
21	01643-31032	WASHER	2	SN:B10001--
22	01010-81260	BOLT	2	SN:B10001--
23	419-43-17920	WASHER	2	SN:B10001--
24	417-62-13620	CUSHION	2	SN:B10001--
25	417-62-14130	SPACER	2	SN:B10001--
26	419-43-17930	CUSHION	2	SN:B10001--
27	419-43-17920	WASHER	2	SN:B10001--
28	01580-01210	NUT	2	SN:B10001--
29	01643-31232	WASHER	2	SN:B10001--
30	08034-20536	BAND	2	SN:B10001--
31	08017-30702	CONDUIT	1	SN:B10001--

Ref. K0210-30A0 Page 240410

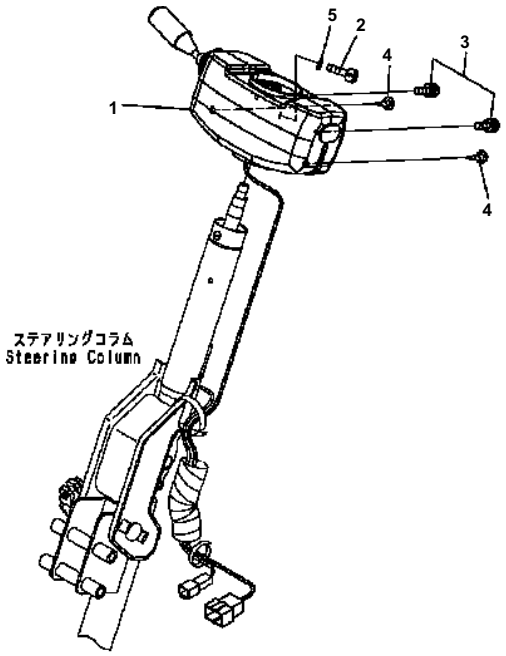

WA200-5 S/N B10001-UP

TRANSMISSION CONTROL

Item	Part No.	Description	Qty	Options
1	418-43-36122	SWITCH	1	SN:B10001--
2	3EB-55-32290	BOLT	1	SN:B10001--
3	01023-70512	SCREW	2	SN:B10001--
4	01370-00516	SCREW	2	SN:B10001--
5	01641-20812	WASHER	1	SN:B10001--

Ref. K0210-31A0 Page 240420

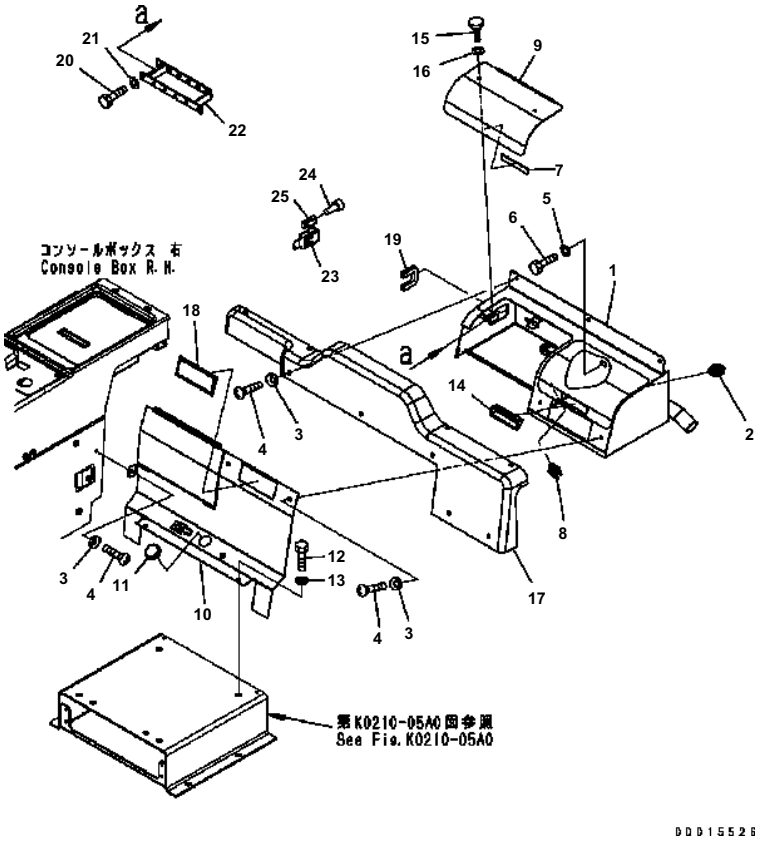

WA200-5 S/N B10001-UP

COOL AND HEAT BOX (AIR CONDITIONER LESS)

Item	Part No.	Description	Qty	Options
1	418-54-32323	CONSOLE BOX	1	SN:B10001--
2	23S-55-51530	CLIP	1	SN:B10001--
3	418-926-3490	WASHER	12	SN:B10001--
4	01225-70616	SCREW	12	SN:B10001--
5	01643-31032	WASHER	4	SN:B10001--
6	01010-81020	BOLT	4	SN:B10001--
7	418-54-22190	CUSHION	1	SN:B10001--
8	23S-55-51530	CLIP	1	SN:B10001--
9	418-54-32341	COVER	1	SN:B10001--
10	418-54-32332	COVER	1	SN:B10001--
11	09415-02512	CAP	2	SN:B10001--
12	01010-80616	BOLT	1	SN:B10001--
13	01643-30623	WASHER	1	SN:B10001--
14	421-54-22750	HANDLE	1	SN:B10001--
15	421-09-21260	SCREW	2	SN:B10001--
16	01023-70316	SCREW	2	SN:B10001--
17	418-54-32725	COVER	1	SN:B10001--
18	424-09-12610	COVER	1	SN:B10001--
19	421-54-22520	FINISHER	1	SN:B10001--
20	01010-80614	BOLT	2	SN:B10001--
21	01643-30623	WASHER	2	SN:B10001--
22	418-54-32931	BRACKET	1	SN:B10001--
23	419-06-31541	WIRING HARNESS	1	SN:B10001--
24	08191-00770	PLUG	6	SN:B10001--
25	08192-22200	CONNECTOR	1	SN:B10001--

Ref. K0210-32A5 Page 240430

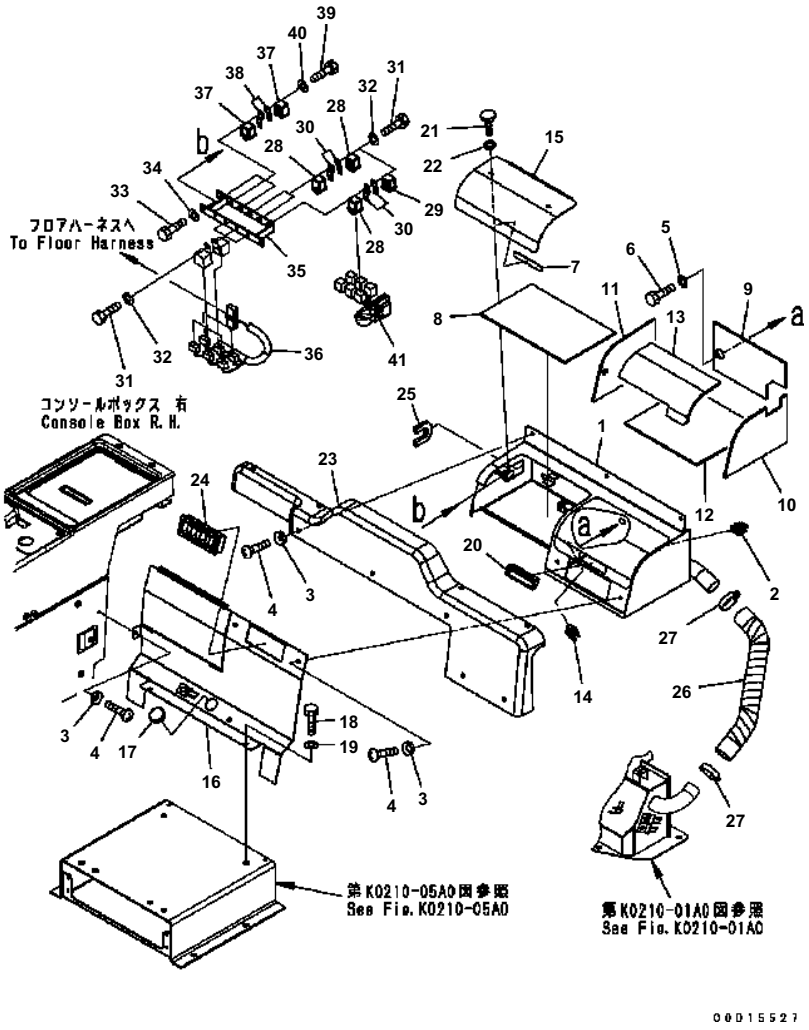

WA200-5 S/N B10001-UP

COOL AND HEAT BOX (FOX AIR CONDITIONER)

Item	Part No.	Description	Qty	Options
1	418-54-32323	CONSOLE BOX	1	SN:B10001--
2	23S-55-51530	CLIP	1	SN:B10001--
3	418-926-3490	WASHER	12	SN:B10001--
4	01225-70616	SCREW	12	SN:B10001--
5	01643-31032	WASHER	4	SN:B10001--
6	01010-81020	BOLT	4	SN:B10001--
7	418-54-22190	CUSHION	1	SN:B10001--
8	418-54-32460	INSULATOR	1	SN:B10001--
9	418-54-32352	INSULATOR	1	SN:B10001--
10	418-54-32362	INSULATOR	1	SN:B10001--
11	418-54-32372	INSULATOR	1	SN:B10001--
12	418-54-32381	INSULATOR	1	SN:B10001--
13	418-54-32392	INSULATOR	1	SN:B10001--
14	23S-55-51530	CLIP	1	SN:B10001--
15	418-54-32341	COVER	1	SN:B10001--
16	418-54-32332	COVER	1	SN:B10001--
17	09415-02512	CAP	2	SN:B10001--
18	01010-80616	BOLT	1	SN:B10001--
19	01643-30623	WASHER	1	SN:B10001--
20	421-54-22750	HANDLE	1	SN:B10001--
21	421-09-21260	SCREW	2	SN:B10001--
22	01640-20610	WASHER	2	SN:B10001--
23	418-54-32725	COVER	1	SN:B10001--
24	421-07-23870	GRILLE	1	SN:B10001--
25	421-54-22520	FINISHER	1	SN:B10001--
26	418-07-38130	HOSE	1	SN:B10001--
27	07281-00489	CLAMP	2	SN:B10001--
28	569-06-61960	RELAY	5	SN:B10001--
29	569-06-61970	RELAY	1	SN:B10001--
30	287-06-16420	BRACKET	6	SN:B10001--
31	01010-80616	BOLT	6	SN:B10001--
32	01643-30623	WASHER	6	SN:B10001--
33	01010-80614	BOLT	2	SN:B10001--
34	01643-30623	WASHER	2	SN:B10001--
35	418-54-32931	BRACKET	1	SN:B10001--
36	418-S61-3114	WIRING HARNESS	1	SN:B10001--
37	569-06-61960	RELAY	6	SN:B10001--
38	287-06-16420	BRACKET	6	SN:B10001--
39	01010-80616	BOLT	3	SN:B10001--
40	01643-30623	WASHER	3	SN:B10001--

Ref. K0210-32A6 Page 240440

WA200-5 S/N B10001-UP

COOL AND HEAT BOX (FOX AIR CONDITIONER)

Item	Part No.	Description	Qty	Options
41	418-06-32710	WIRING HARNESS	1	SN:B10001--

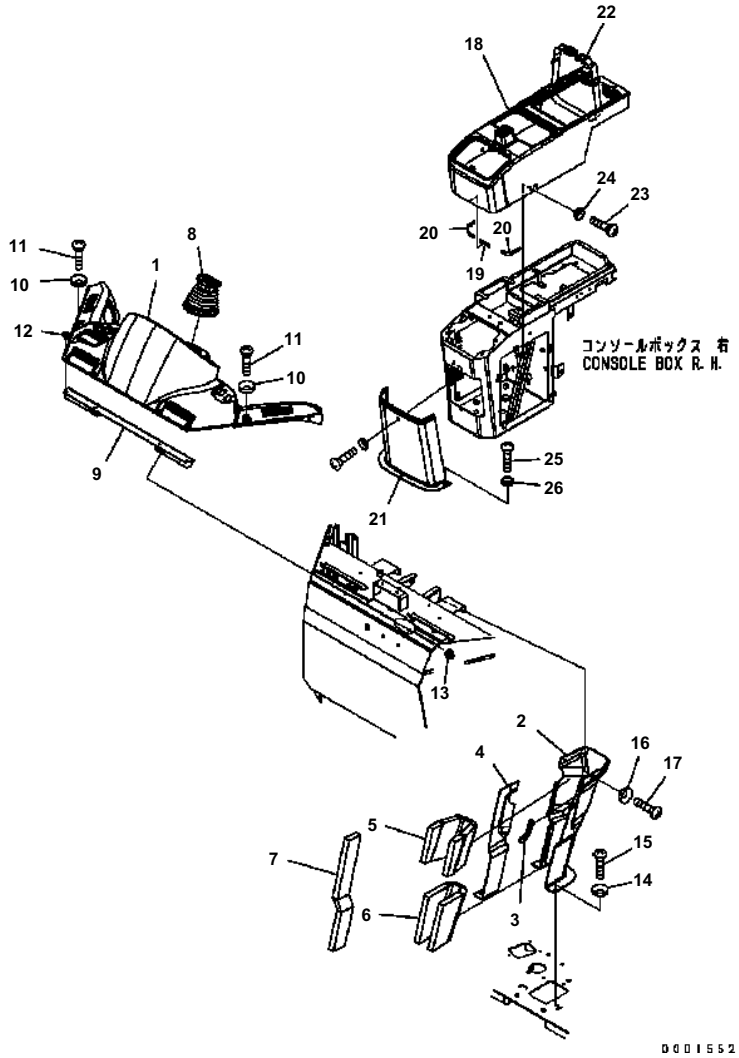

WA200-5 S/N B10001-UP

FLOOR (COVER)

Item	Part No.	Description	Qty	Options
1	418-54-32612	COVER	1	SN:B10001--
2	418-54-32644	COVER	1	SN:B10001--
3	421-54-22520	FINISHER	1	SN:B10001--
4	418-54-32653	COVER	1	SN:B10001--
5	418-54-32582	SHEET	1	SN:B10001--
6	418-54-32593	SHEET	1	SN:B10001--
7	418-54-33142	SHEET	1	SN:B10001--
8	418-40-32160	BOOT	1	SN:B10001--
9	418-54-32713	PLATE	1	SN:B10001--
10	418-926-3490	WASHER	8	SN:B10001--
11	01225-70616	SCREW	8	SN:B10001--
12	418-54-32550	RIVET	4	SN:B10001--
13	418-54-32560	KNOB	2	SN:B10001--
14	418-926-3490	WASHER	3	SN:B10001--
15	01225-70616	SCREW	3	SN:B10001--
16	418-926-3490	WASHER	4	SN:B10001--
17	01225-70616	SCREW	4	SN:B10001--
18	418-54-32625	COVER	1	SN:B10001--
19	421-09-12780	CUSHION	1	SN:B10001--
20	418-54-22190	CUSHION	2	SN:B10001--
21	418-54-32870	COVER	1	SN:B10001--
22	421-54-32790	BAND	1	SN:B10001--
23	01225-70616	SCREW	2	SN:B10001--
24	418-926-3490	WASHER	2	SN:B10001--
25	01225-70616	SCREW	5	SN:B10001--
26	418-926-3490	WASHER	5	SN:B10001--

Ref. K0210-33A5 Page 240450

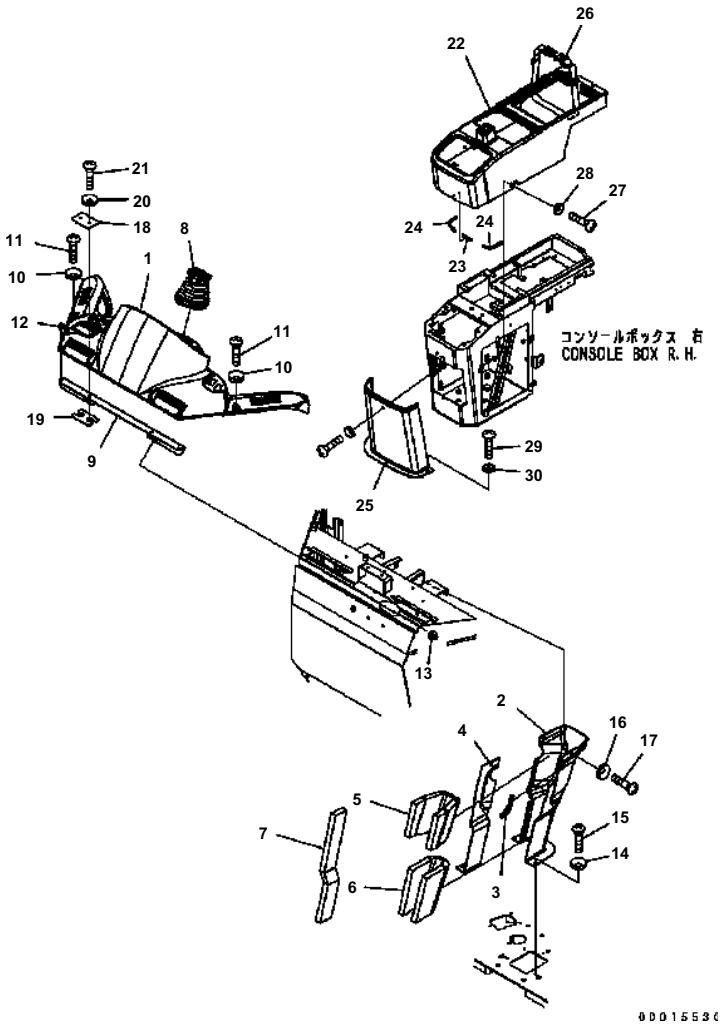

WA200-5 S/N B10001-UP

FLOOR (COVER) (FOR OPEN CAB)

Item	Part No.	Description	Qty	Options
1	418-54-32612	COVER	1	SN:B10001--
2	418-54-32644	COVER	1	SN:B10001--
3	421-54-22520	FINISHER	1	SN:B10001--
4	418-54-32653	COVER	1	SN:B10001--
5	418-54-32582	SHEET	1	SN:B10001--
6	418-54-32593	SHEET	1	SN:B10001--
7	418-54-33142	SHEET	1	SN:B10001--
8	418-40-32160	BOOT	1	SN:B10001--
9	418-54-32713	PLATE	1	SN:B10001--
10	418-926-3490	WASHER	8	SN:B10001--
11	01225-70616	SCREW	8	SN:B10001--
12	418-54-32550	RIVET	4	SN:B10001--
13	418-54-32560	KNOB	2	SN:B10001--
14	418-926-3490	WASHER	3	SN:B10001--
15	01225-70616	SCREW	3	SN:B10001--
16	418-926-3490	WASHER	4	SN:B10001--
17	01225-70616	SCREW	4	SN:B10001--
18	418-922-3610	PLATE	1	SN:B10001--
19	421-922-3620	PLATE	1	SN:B10001--
20	23S-55-51970	WASHER	2	SN:B10001--
21	01225-70620	SCREW	2	SN:B10001--
22	418-54-32625	COVER	1	SN:B10001--
23	421-09-12780	CUSHION	1	SN:B10001--
24	418-54-22190	CUSHION	2	SN:B10001--
25	418-54-32870	COVER	1	SN:B10001--
26	421-54-32790	BAND	1	SN:B10001--
27	01225-70616	SCREW	2	SN:B10001--
28	418-926-3490	WASHER	2	SN:B10001--
29	01225-70616	SCREW	5	SN:B10001--
30	418-926-3490	WASHER	5	SN:B10001--

Ref. K0210-33A9 Page 240460

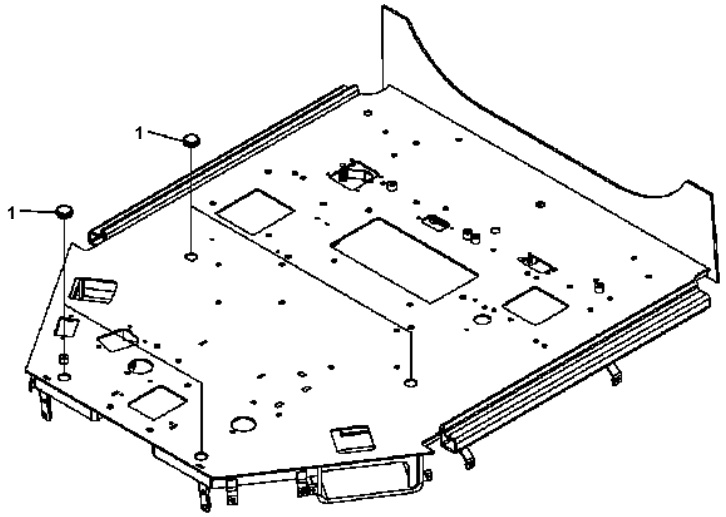

00D02551

WA200-5 S/N B10001-UP

FLOOR (CAP)

Item	Part No.	Description	Qty	Options
1	09415-02512	CAP	4	SN:B10001--

Ref. K0210-34A0 Page 240470

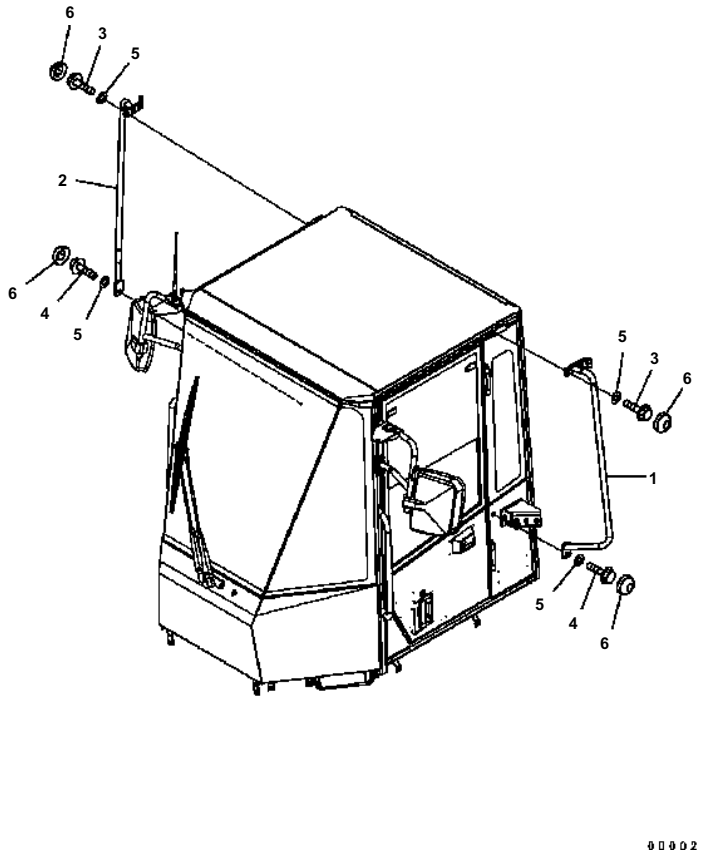

WA200-5 S/N B10001-UP

HAND RAIL

Item	Part No.	Description	Qty	Options
1	418-926-3742	HANDRAIL {L.H.}	1	SN:B10001--
2	418-926-3752	HANDRAIL {R.H.}	1	SN:B10001--
3	01435-01025	BOLT	4	SN:B10001--
4	01435-01030	BOLT	2	SN:B10001--
5	01643-31032	WASHER	6	SN:B10001--
6	363-54-31450	CAP	6	SN:B10001--

Ref. K0210-35A0 Page 240480

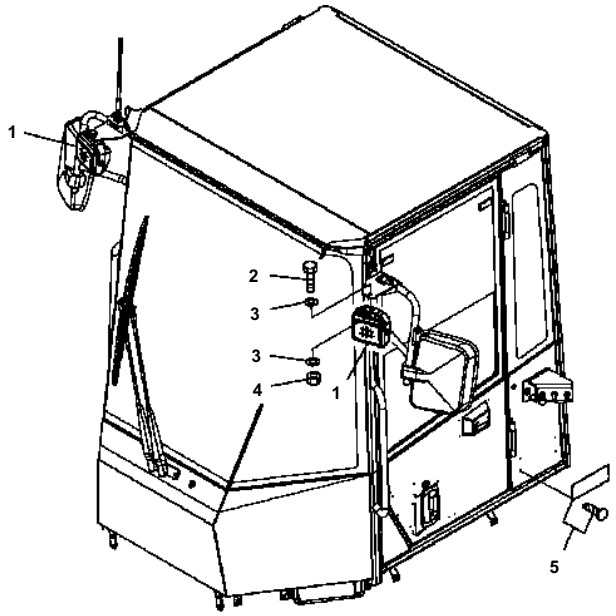

00D02587

WA200-5 S/N B10001-UP

WORKING LAMP AND PLATE

Item	Part No.	Description	Qty	Options
1	426-56-23360	LAMP ASS'Y	2	SN:B10001--
	421-06-23320	· LENS	1	SN:B10001--
	421-06-23330	· BULB¤ 70W	1	SN:B10001--
	08056-00271	· CONNECTOR	1	SN:B10001--
2	01010-81225	BOLT	2	SN:B10001--
3	01643-31232	WASHER	4	SN:B10001--
4	01580-11210	NUT	2	SN:B10001--
5	09620-A2120	PLATE	1	SN:B10001--
	☆	· PLATE¤ NAME	1	SN:B10001--
	04418-13060	· SCREW	4	SN:B10001--B10056
	205-00-72430	· RIVET	4	SN:B10001--

Ref. K0210-36A0 Page 240490

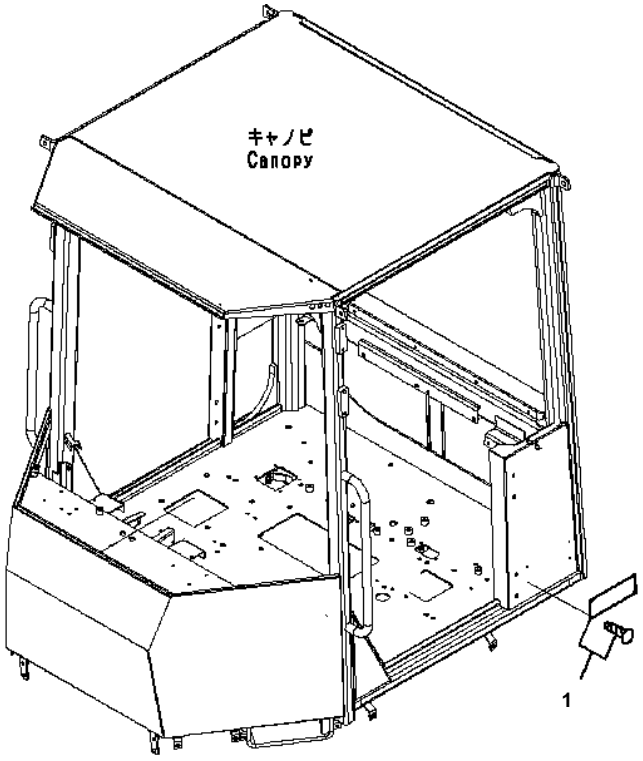

00002714

WA200-5 S/N B10001-UP

PLATE

Item	Part No.	Description	Qty	Options
1	09620-A2120	PLATE	1	SN:B10001--
	☆	・ PLATE¤ NAME	1	SN:B10001--
	04418-13060	・ SCREW	4	SN:B10001--B10056
	205-00-72430	・ RIVET	4	SN:B10001--

Ref. K0210-36A1 Page 240491

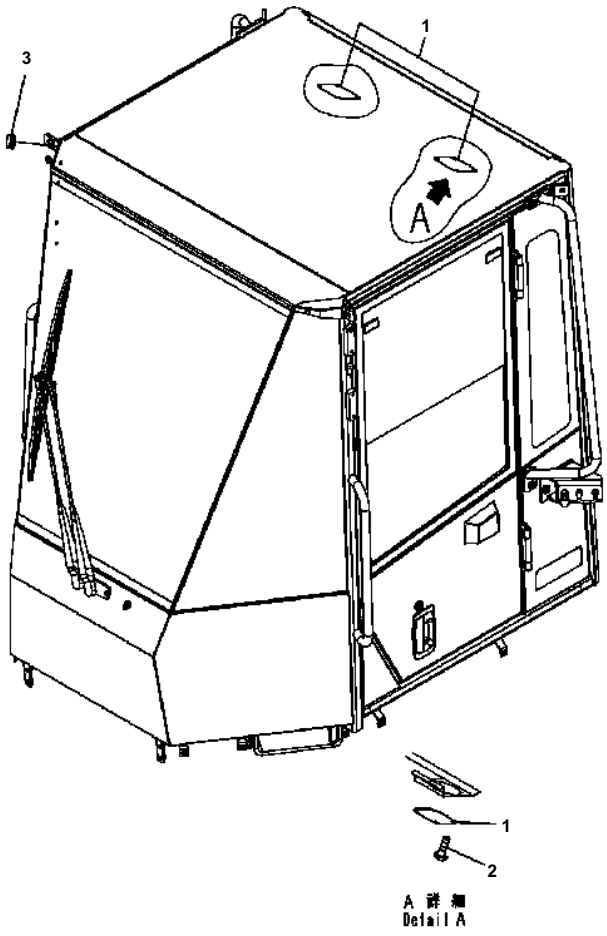

WA200-5 S/N B10001-UP

FLOOR (SPEAKER COVER)

Item	Part No.	Description	Qty	Options
1	421-925-3520	PLATE	2	SN:B10001--
2	01220-40420	SCREW	8	SN:B10001--
3	09415-01008	CAP	1	SN:B10001--

Ref. K0210-46A5 Page 240500

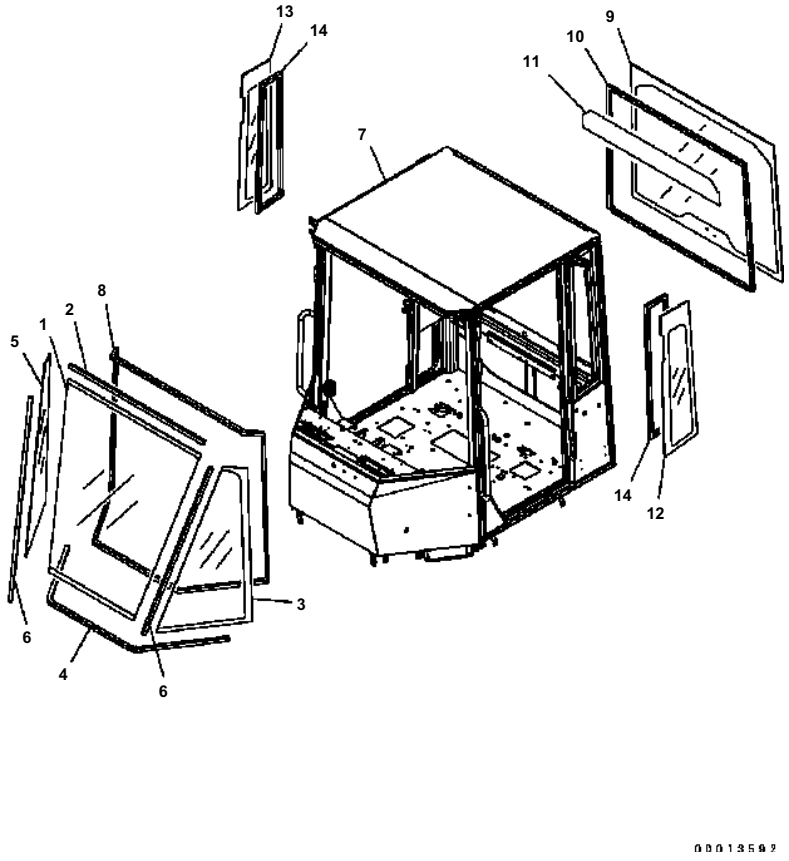

WA200-5 S/N B10001-UP

ROPS CAB (BODY, GLASS)

Item	Part No.	Description	Qty	Options
	418-926-3504	CAB ASS'Y	1	SN:B10001--
THESE ASSEMBLIES CONSIST OF ALL PARTS SHOWN IN FIGS.K0210-51A5 TO K0210-58A5.				
1	418-925-3540	· GLASS	1	SN:B10001--
2	417-926-3550	· WEATHER STRIP	1	SN:B10001--
3	417-926-3520	· GLASS	1	SN:B10001--
4	417-926-3560	· WEATHER STRIP	1	SN:B10001--
5	417-926-3530	· GLASS	1	SN:B10001--
6	417-926-3570	· WEATHER STRIP	2	SN:B10001--
7	☆	· ROPS CAB	1	SN:B10001--
8	418-926-3510	· DAM	1	SN:B10001--
9	416-926-3571	· GLASS	1	SN:B10001--
10	418-926-3530	· DAM	1	SN:B10001--
11	421-926-3790	· PLATE	1	SN:B10001--
12	418-926-3581	· GLASS	1	SN:B10001--
13	418-926-3591	· GLASS	1	SN:B10001--
14	418-926-3520	· DAM	2	SN:B10001--

Ref. K0210-51A5 Page 240510

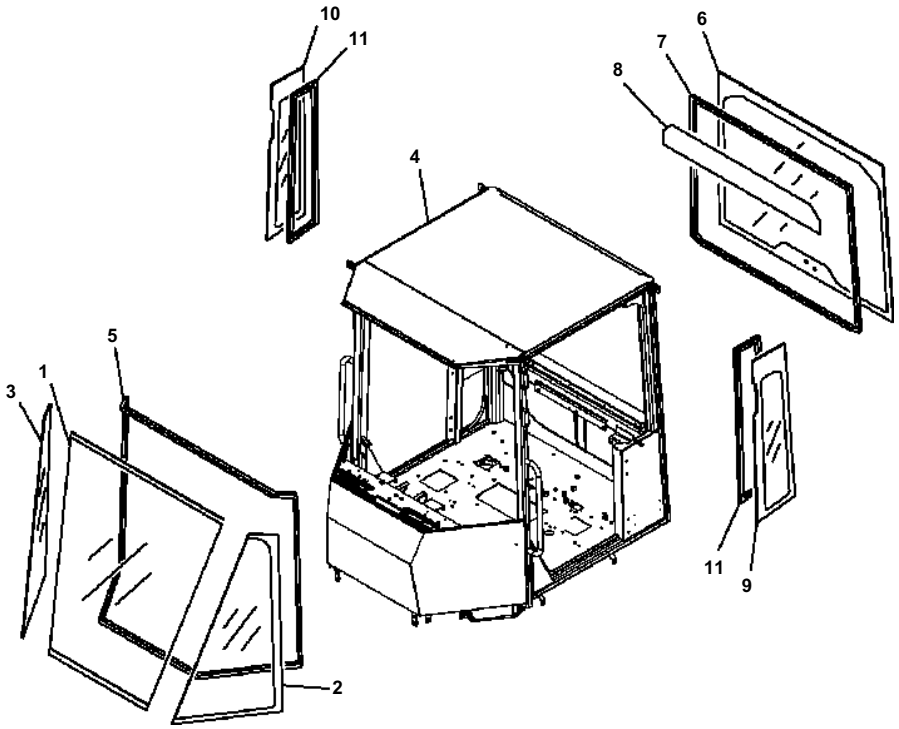

WA200-5 S/N B10001-UP

OPEN CAB (BODY, GLASS)

Item	Part No.	Description	Qty	Options
	418-926-B400	OPEN CAB ASS'Y	1	SN:B10001--
THESE ASSEMBLIES CONSIST OF ALL PARTS SHOWN IN FIGS.K0210-51A5 TO K0210-58A5.				
1	418-925-3540	· GLASS	1	SN:B10001--
2	417-926-3520	· GLASS	1	SN:B10001--
3	417-926-3530	· GLASS	1	SN:B10001--
4	(☆417-926-3811)	· OPEN CAB	1	SN:B10001--
5	418-926-3510	· DAM	1	SN:B10001--
6	416-926-3571	· GLASS	1	SN:B10001--
7	418-926-3530	· DAM	1	SN:B10001--
8	418-926-B630	· PLATE	1	SN:B10106--
	421-926-3790	· PLATE	1	SN:B10001--B10105
9	418-926-3581	· GLASS	1	SN:B10001--
10	418-926-3591	· GLASS	1	SN:B10001--
11	418-926-3520	· DAM	2	SN:B10001--

Ref. K0210-51A6 Page 240520

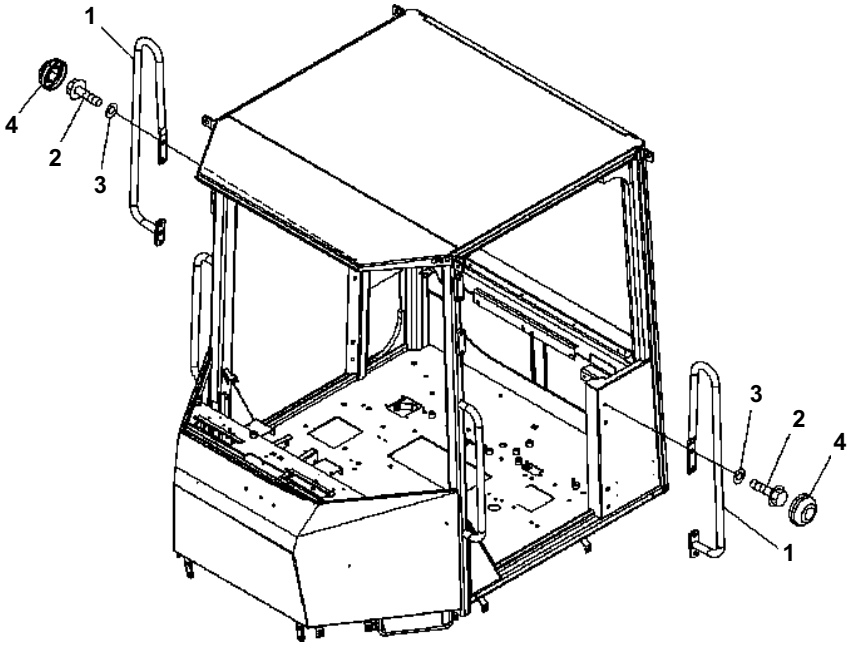

WA200-5 S/N B10001-UP

OPEN CAB

Item	Part No.	Description	Qty	Options
1	421-921-3250	HAND RAIL	2	SN:B10001--
2	01435-01030	BOLT	8	SN:B10001--
3	01643-31032	WASHER	8	SN:B10001--
4	363-54-31450	CAP	8	SN:B10001--
5	09415-01008	CAP	1	SN:B10001--

Ref. K0210-51A9 Page 240530

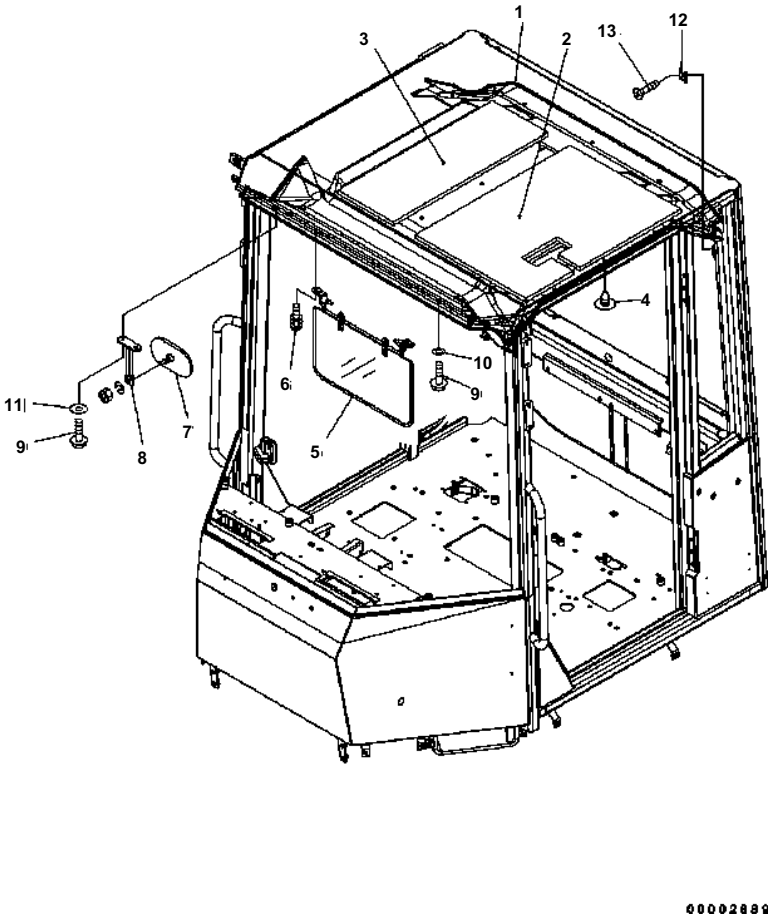

WA200-5 S/N B10001-UP

ROPS CAB (ROOF PAD)

Item	Part No.	Description	Qty	Options
	(418-926-3504)	CAB ASS'Y	1	SN:B10001--@
THESE ASSEMBLIES CONSIST OF ALL PARTS SHOWN IN FIGS.K0210-51A5 TO K0210-58A5.				
1	416-926-3481	· PAD	1	SN:B10001--@
2	416-926-3771	· SHEET	1	SN:B10001--@
3	416-926-3781	· SHEET	1	SN:B10001--@
4	423-56-21910	· BUTTON	13	SN:B10001--@
5	416-56-31120	· SUN VISOR	1	SN:B10001--@
6	01023-70620	· SCREW	4	SN:B10001--@
7	11Y-979-4190	· MIRROR	1	SN:B10001--B10049
8	418-926-3470	· STAY	1	SN:B10001--B10049
9	01435-40620	· BOLT	4	SN:B10001--@
10	01643-70623	· WASHER	2	SN:B10001--B10049
11	22W-70-16120	· WASHER	2	SN:B10001--B10049
12	205-54-51250	· HANGER	1	SN:B10001--@
13	01224-70412	· SCREW	2	SN:B10056--@
	01224-70420	· SCREW	2	SN:B10001--B10055

Ref. K0210-52A5 Page 240540

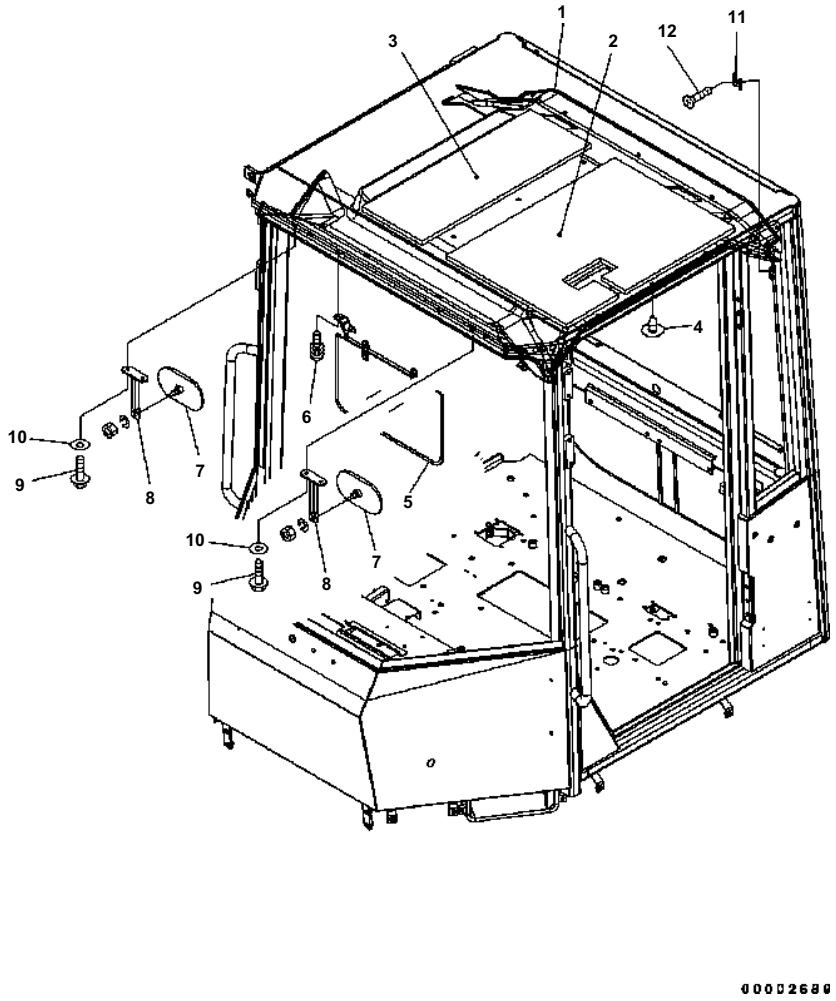

WA200-5 S/N B10001-UP

ROPS CAB (ROOF PAD)

Item	Part No.	Description	Qty	Options
	(418-926-3504)	CAB ASS'Y	1	SN:B10001--
THESE ASSEMBLIES CONSIST OF ALL PARTS SHOWN IN FIGS.K0210-51A5 TO K0210-58A5.				
1	416-926-3481	· PAD	1	SN:B10001--
2	416-926-3771	· SHEET	1	SN:B10001--
3	416-926-3781	· SHEET	1	SN:B10001--
4	423-56-21910	· BUTTON	13	SN:B10001--
5	416-56-31120	· SUN VISOR	1	SN:B10001--
6	01023-70620	· SCREW	4	SN:B10001--
7	11Y-979-4190	· MIRROR	2	SN:B10050--
8	418-926-3470	· STAY	2	SN:B10050--
9	01435-40620	· BOLT	4	SN:B10001--
10	22W-70-16120	· WASHER	4	SN:B10050--
11	205-54-51250	· HANGER	1	SN:B10001--
12	01224-70412	· SCREW	2	SN:B10056--

Ref. K0210-52A5A Page 240541

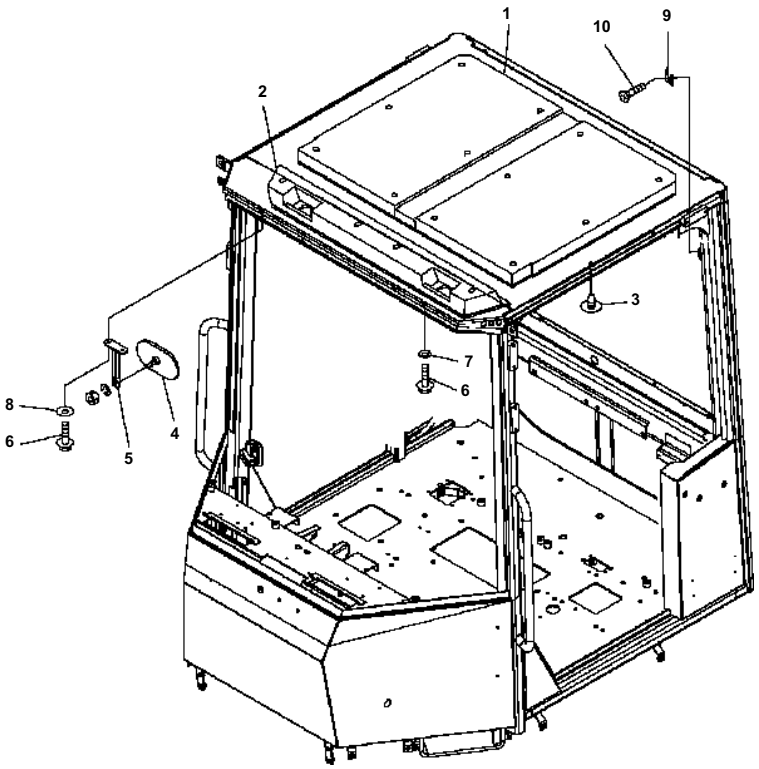

WA200-5 S/N B10001-UP

OPEN CAB (ROOF LINING)

Item	Part No.	Description	Qty	Options
	(418-926-B400)	CAB ASS'Y	1	SN:B10001--
THESE ASSEMBLIES CONSIST OF ALL PARTS SHOWN IN FIGS.K0210-51A5 TO K0210-58A5.				
1	418-926-B490	· ROOF LINING REAR	1	SN:B10001--
2	418-926-B510	· ROOF LINING FRONT	1	SN:B10001--
3	14X-978-1340	· BUTTON	16	SN:B10001--
4	11Y-979-4190	· MIRROR	2	SN:B10001--
5	418-926-3470	· STAY	2	SN:B10001--
6	01435-40620	· BOLT	8	SN:B10001--
7	01643-70623	· WASHER	4	SN:B10001--
8	22W-70-16120	· WASHER	4	SN:B10001--
9	205-54-51250	· HANGER	1	SN:B10001--
10	01224-70412	· SCREW	2	SN:B10056--
	01224-70420	· SCREW	2	SN:B10001--B10055

Ref. K0210-52A6 Page 240550

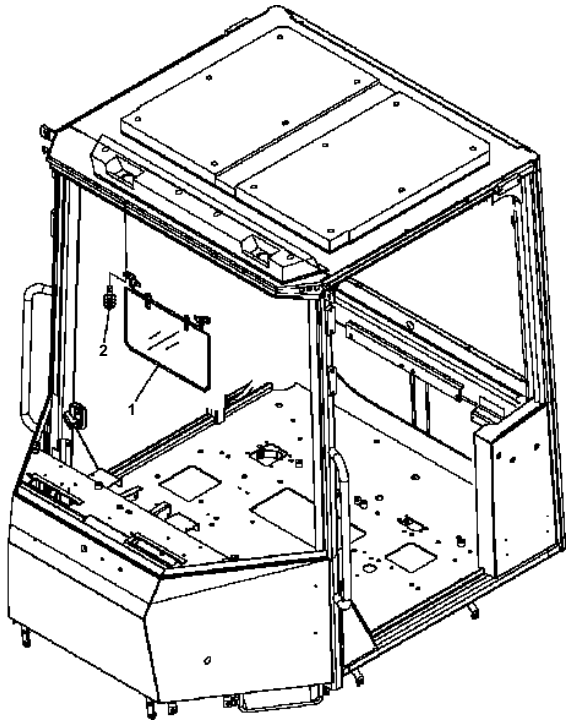

WA200-5 S/N B10001-UP

OPEN CAB (SUN VISOR)

Item	Part No.	Description	Qty	Options
1	416-56-31120	SUN VISOR	1	SN:B10056--
2	01023-70620	SCREW	4	SN:B10056--

Ref. K0210-52A7 Page 240551

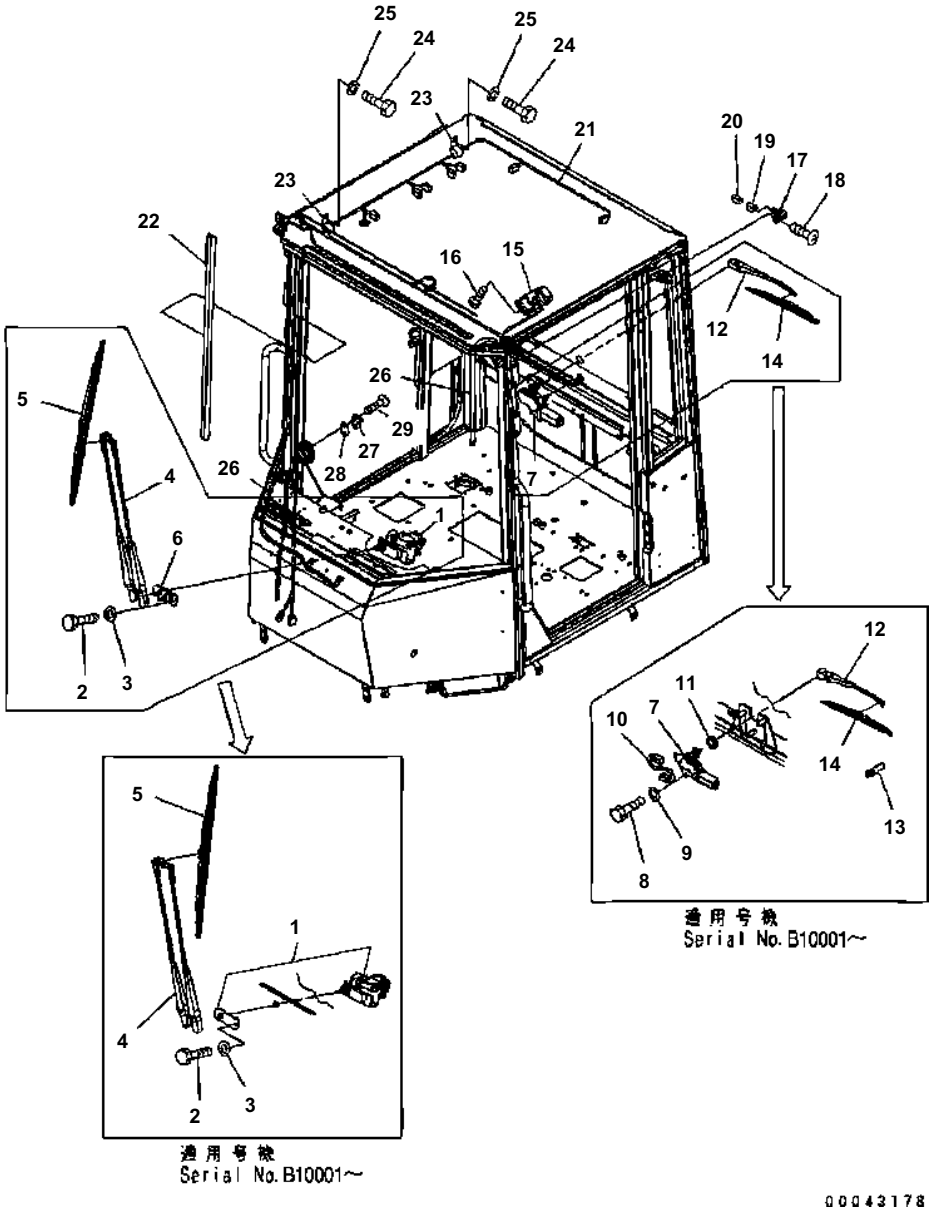

WA200-5 S/N B10001-UP

ROPS CAB (WIPER)

Item	Part No.	Description	Qty	Options
	(418-926-3504)	CAB ASS'Y	1	SN:B10001--
THESE ASSEMBLIES CONSIST OF ALL PARTS SHOWN IN FIGS.K0210-51A5 TO K0210-58A5.				
1	418-926-3932	· WIPER MOTOR	1	SN:B10001--
2	02030-70444	· BOLT	1	SN:B10001--
3	01643-70623	· WASHER	1	SN:B10001--
4	418-923-3941	· ARM	1	SN:B10001--
5	425-54-15250	· BLADE	1	SN:B10001--
7	421-926-3612	· MOTOR ASS'Y	1	SN:B10001--
8	01010-80816	· BOLT	3	SN:B10001--
9	01643-30823	· WASHER	3	SN:B10001--
10	417-926-3760	· WIRING HARNESS	1	SN:B10001--
11	417-926-3650	· SPACER	1	SN:B10001--
12	418-926-3971	· WIPER ARM	1	SN:B10001--
13	22T-55-11630	· NOZZLE ASS'Y	1	SN:B10001--
14	20U-54-24850	· BLADE	1	SN:B10001--
15	421-06-26210	· LAMP ASS'Y	1	SN:B10001--
16	419-923-2130	· SCREW	2	SN:B10001--
17	424-926-3490	· SWITCH	2	SN:B10001--
18	419-923-2130	· SCREW	2	SN:B10001--
19	08056-00111	· CONNECTOR	2	SN:B10001--
20	08056-00130	· HOLDER	2	SN:B10001--
21	418-926-3892	· WIRING HARNESS	1	SN:B10001--
22	417-926-3450	· DUCT	1	SN:B10001--
23	04434-51310	· CLIP	2	SN:B10001--
24	01010-81016	· BOLT	3	SN:B10001--
25	01643-31032	· WASHER	3	SN:B10001--
26	421-54-15440	· HOSE	2	SN:B10001--
27	20Y-54-35470	· STRIKER	2	SN:B10001--
28	20Y-54-35480	· SHIM	2	SN:B10001--
29	01240-01025	· SCREW	4	SN:B10001--

Ref. K0210-53A5 Page 240560

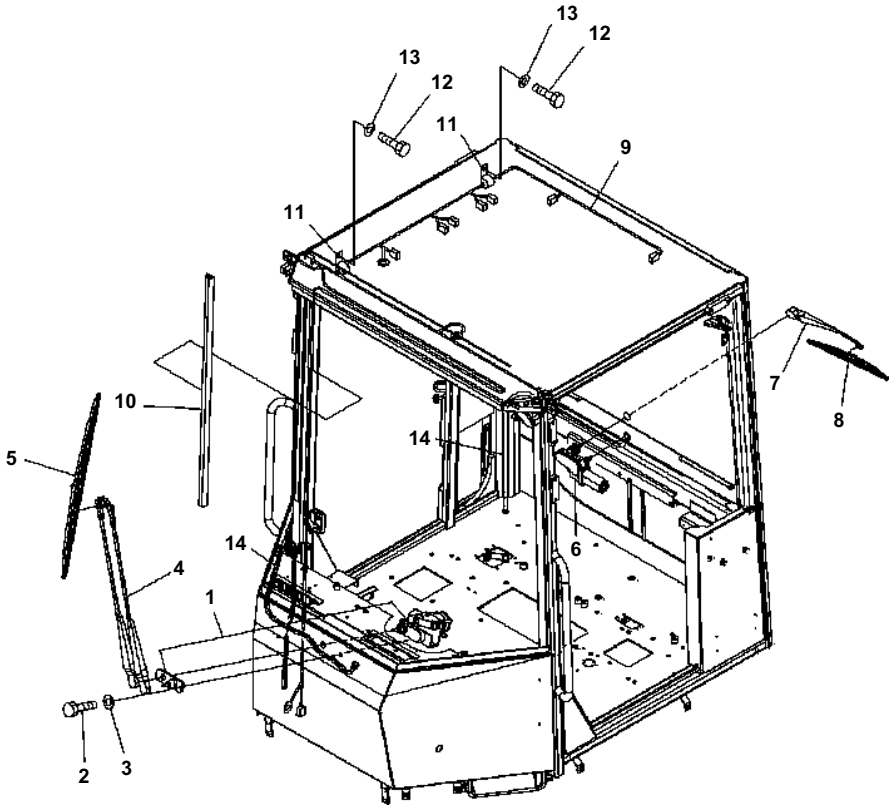

WA200-5 S/N B10001-UP

OPEN CAB (WIPER)

Item	Part No.	Description	Qty	Options
	(418-926-B400)	CAB ASS'Y	1	SN:B10001--
THESE ASSEMBLIES CONSIST OF ALL PARTS SHOWN IN FIGS.K0210-51A5 TO K0210-58A5.				
1	418-926-3932	· WIPER MOTOR	1	SN:B10001--
2	02030-70444	· BOLT	1	SN:B10001--
3	01643-70623	· WASHER	1	SN:B10001--
4	418-923-3941	· ARM	1	SN:B10001--
5	425-54-15250	· BLADE	1	SN:B10001--
6	421-926-3612	· MOTOR ASS'Y	1	SN:B10001--
7	418-926-3971	· WIPER ARM	1	SN:B10001--
8	20U-54-24850	· BLADE	1	SN:B10001--
9	418-926-3892	· WIRING HARNESS	1	SN:B10001--
10	417-926-3450	· DUCT	1	SN:B10001--
11	04434-51310	· CLIP	2	SN:B10001--
12	01010-81016	· BOLT	3	SN:B10001--
13	01643-31032	· WASHER	3	SN:B10001--
14	421-54-15440	· HOSE	2	SN:B10001--

Ref. K0210-53A6 Page 240570

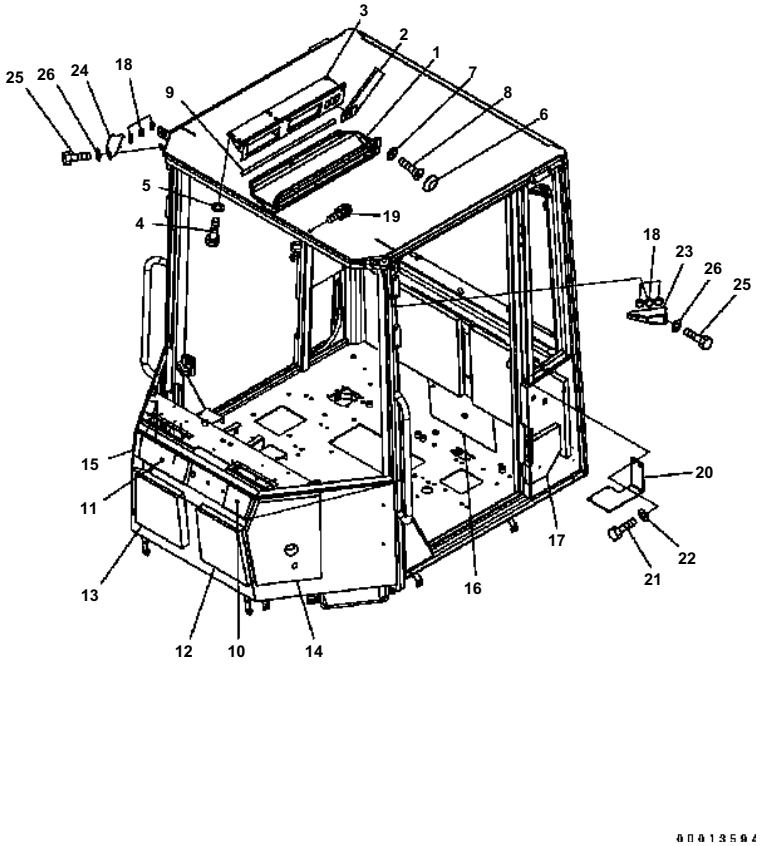

WA200-5 S/N B10001-UP

ROPS CAB (SHEET, COVER)

Item	Part No.	Description	Qty	Options
	(418-926-3504)	CAB ASS'Y	1	SN:B10001--
THESE ASSEMBLIES CONSIST OF ALL PARTS SHOWN IN FIGS.K0210-51A5 TO K0210-58A5.				
1	418-925-3450	· COVER	1	SN:B10001--
2	418-06-36230	· PLUG	3	SN:B10001--
3	418-926-3463	· BRACKET	1	SN:B10001--
4	01010-80616	· BOLT	6	SN:B10001--
5	01643-30623	· WASHER	6	SN:B10001--
6	421-09-31310	· CAP ASS'Y	8	SN:B10001--
7	22W-70-16120	· WASHER	8	SN:B10001--
8	01224-40620	· SCREW	8	SN:B10001--
9	418-925-3461	· FINISHER	1	SN:B10001--
10	416-926-3810	· SHEET	1	SN:B10001--
11	416-926-3820	· SHEET	1	SN:B10001--
12	416-926-3830	· SHEET	1	SN:B10001--
13	416-926-3840	· SHEET	1	SN:B10001--
14	416-926-3850	· SHEET	1	SN:B10001--
15	416-926-3860	· SHEET	1	SN:B10001--
16	416-926-3870	· SHEET	2	SN:B10001--
17	416-926-3880	· SHEET	1	SN:B10001--
18	09415-01008	· CAP	6	SN:B10001--
19	01023-60612	· SCREW	1	SN:B10001--
20	418-926-3H11	· BRACKET	1	SN:B10001--
21	01010-81020	· BOLT	2	SN:B10001--
22	01643-31032	· WASHER	2	SN:B10001--
23	418-925-3350	· COVER	1	SN:B10001--
24	418-925-3360	· COVER	1	SN:B10001--
25	01010-80612	· BOLT	4	SN:B10001--
26	01643-30623	· WASHER	4	SN:B10001--

Ref. K0210-54A5 Page 240580

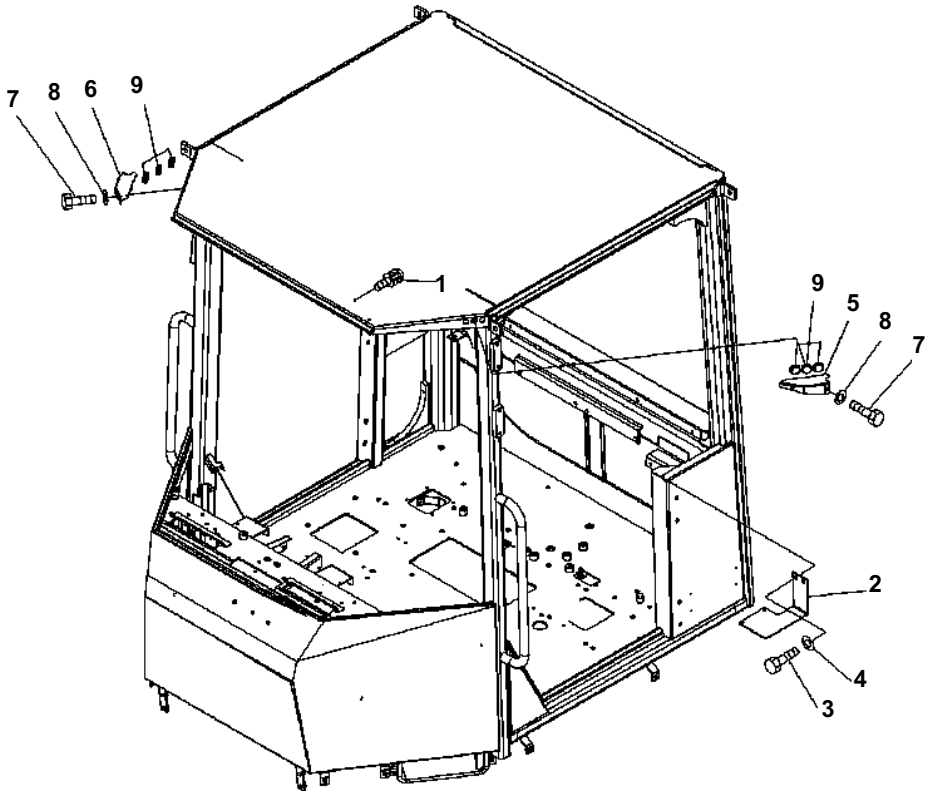

WA200-5 S/N B10001-UP

OPEN CAB (SHEET, COVER)

Item	Part No.	Description	Qty	Options
	(418-926-B400)	CAB ASS'Y	1	SN:B10001--
THESE ASSEMBLIES CONSIST OF ALL PARTS SHOWN IN FIGS.K0210-51A5 TO K0210-58A5.				
1	01023-60612	· SCREW	1	SN:B10001--
2	418-926-3H11	· BRACKET	1	SN:B10001--
3	01010-81020	· BOLT	2	SN:B10001--
4	01643-31032	· WASHER	2	SN:B10001--
5	418-925-3350	· COVER	1	SN:B10001--
6	418-925-3360	· COVER	1	SN:B10001--
7	01010-80612	· BOLT	4	SN:B10001--
8	01643-30623	· WASHER	4	SN:B10001--
9	09415-01008	· CAP	6	SN:B10001--

Ref. K0210-54A6 Page 240590

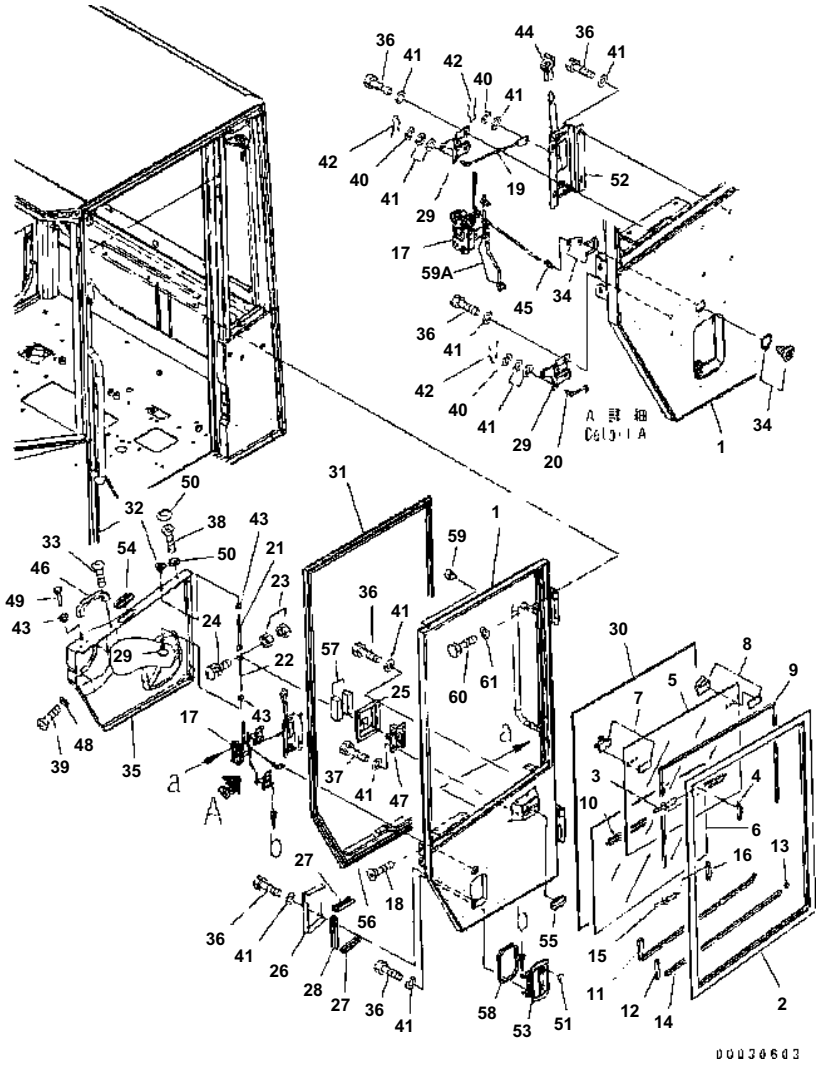

WA200-5 S/N B10001-UP

ROPS CAB (DOOR L.H.)

Item	Part No.	Description	Qty	Options
	(418-926-3504)	CAB ASS'Y	1	SN:B10001--
THESE ASSEMBLIES CONSIST OF ALL PARTS SHOWN IN FIGS.K0210-51A5 TO K0210-58A5.				
	417-926-3105	· DOOR ASS'Y {L.H.}	1	SN:B10001--
1	(☆417-926-3112)	· · DOOR	1	SN:B10001--
	417-926-3132	· · SASH ASS'Y {L.H.}	1	SN:B10001--
2	417-926-3850	· · · FRAME	1	SN:B10001--
3	417-926-3990	· · · · RIVET	8	SN:B10001--
4	421-56-11970	· · · · CATCH	4	SN:B10001--
5	417-926-3870	· · · GLASS	1	SN:B10001--
6	417-926-3880	· · · GLASS	1	SN:B10001--
7	417-926-3890	· · · LOCK	1	SN:B10001--
8	417-926-3830	· · · LOCK ASS'Y	1	SN:B10001--
9	417-926-3840	· · · CHANNEL	1	SN:B10001--
10	417-926-3930	· · · CHANNEL	1	SN:B10001--
11	417-926-3940	· · · RUBBER	1	SN:B10001--
12	417-926-3950	· · · STOPPER	1	SN:B10001--
13	417-926-3960	· · · STOPPER	1	SN:B10001--
14	417-926-3970	· · · STOPPER	1	SN:B10001--
15	417-926-3990	· · · RIVET	4	SN:B10001--
16	421-56-11970	· · · CATCH	2	SN:B10001--
17	417-926-3142	· · LOCK	1	SN:B10001--
18	01224-70616	· · SCREW	3	SN:B10001--
19	417-926-3150	· · ROD	1	SN:B10001--
20	417-926-3160	· · ROD {L.H.}	1	SN:B10001--
21	423-925-4220	· · ROD	1	SN:B10001--
22	423-925-4230	· · ROD	1	SN:B10001--
23	01580-10403	· · NUT	2	SN:B10001--
24	01023-60430	· · SCREW	1	SN:B10001--
25	417-926-3181	· · COVER	1	SN:B10001--
26	417-926-3191	· · COVER	1	SN:B10001--
27	417-926-3410	· · SEAL	2	SN:B10001--
28	417-926-3420	· · SEAL	1	SN:B10001--
29	417-926-3210	· · LINK ASS'Y {L.H.}	2	SN:B10001--
30	417-926-3221	· · DAM	1	SN:B10001--
31	417-926-3231	· · SEAL{L.H.}	1	SN:B10001--
32	417-926-3370	· · KNOB	2	SN:B10001--
33	417-926-3250	· · SCREW	2	SN:B10001--
34	417-926-3260	· · LOCK ASS'Y {L.H.}	1	SN:B10001--
35	418-926-3912	· · COVER {L.H.}	1	SN:B10001--

Ref. K0210-55A5A Page 240600

WA200-5 S/N B10001-UP

ROPS CAB (DOOR L.H.)

Item	Part No.	Description	Qty	Options
36	01010-80616	· · BOLT	14	SN:B10001--
37	01010-80620	· · BOLT	4	SN:B10001--
38	01224-70616	· · SCREW	2	SN:B10001--
39	01225-70616	· · SCREW	5	SN:B10001--
40	01640-20610	· · WASHER	3	SN:B10001--
41	01643-30623	· · WASHER	23	SN:B10001--
42	04052-10633	· · PIN	3	SN:B10001--
43	08037-01008	· · GROMMET	3	SN:B10001--
44	14X-911-1540	· · KNOB	1	SN:B10001--
45	205-54-71830	· · SNAP	1	SN:B10001--
46	205-54-72220	· · HANDLE	1	SN:B10001--
47	417-926-3380	· · LOCK	1	SN:B10001--
48	418-926-3490	· · WASHER	5	SN:B10001--
49	419-54-16880	· · KNOB	1	SN:B10001--
50	421-09-31310	· · CAP ASS'Y	2	SN:B10001--
51	421-56-21720	· · CAP	1	SN:B10001--
52	423-926-3223	· · HANDLE	1	SN:B10001--
53	424-926-3260	· · HANDLE	1	SN:B10001--
54	424-926-3630	· · GROMMET	1	SN:B10001--
55	423-926-3860	· · GROMMET	1	SN:B10001--
56	417-926-3430	· · SHEET	1	SN:B10001--
57	417-926-3440	· · SHEET	2	SN:B10001--
58	417-926-3540	· · SEAL	1	SN:B10001--
59	417-923-3950	· · STOPPER	1	SN:B10001--
59A	22B-54-16340	· · SNAP (ROD)	2	SN:B10032--
60	01010-81016	· BOLT	6	SN:B10001--
61	01643-31032	· WASHER	6	SN:B10001--

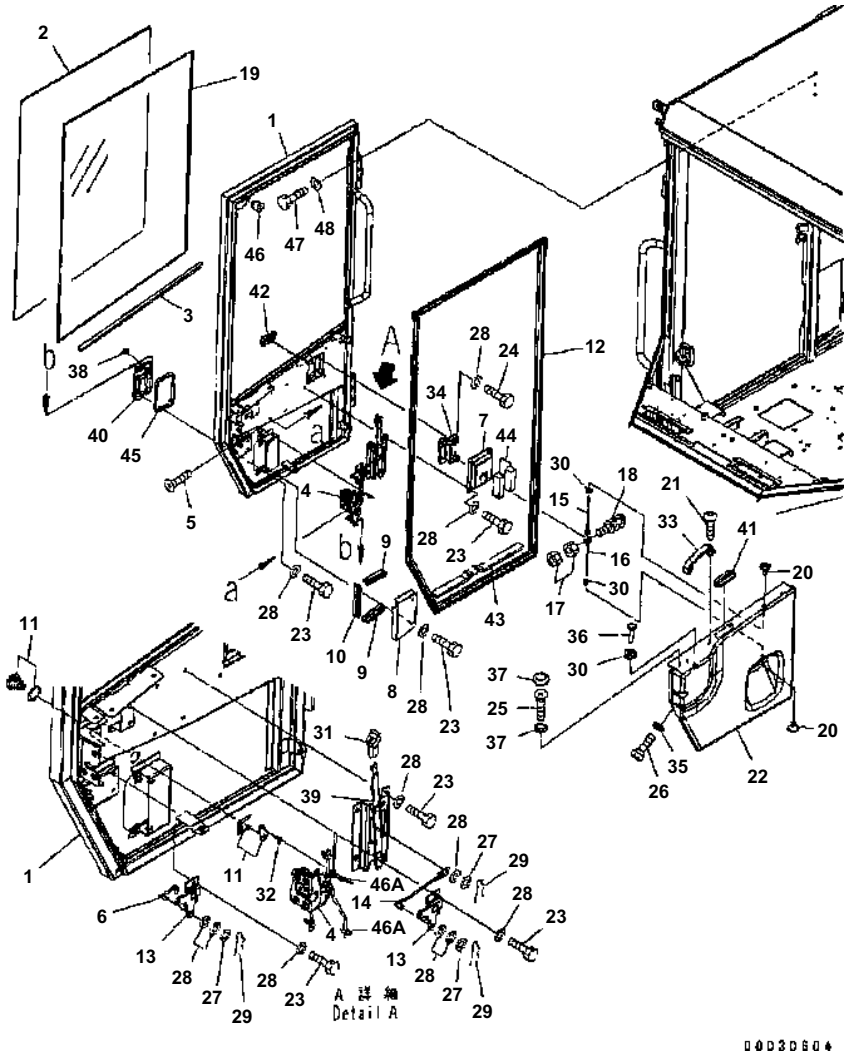

WA200-5 S/N B10001-UP

ROPS CAB (DOOR R.H.)

Item	Part No.	Description	Qty	Options
	(418-926-3504)	CAB ASS'Y	1	SN:B10001--
THESE ASSEMBLIES CONSIST OF ALL PARTS SHOWN IN FIGS.K0210-51A5 TO K0210-58A5.				
	417-926-3204	・DOOR ASS'Y	1	SN:B10001--
1	(☆417-926-3122)	・・DOOR	1	SN:B10001--
2	416-926-3370	・・GLASS	1	SN:B10001--
3	416-926-3380	・・SHEET	1	SN:B10001--
4	417-926-3281	・・LOCK {R.H.}	1	SN:B10001--
5	01224-70616	・・SCREW	3	SN:B10001--
6	417-926-3290	・・ROD {R.H.}	1	SN:B10001--
7	417-926-3181	・・COVER {R.H.}	1	SN:B10001--
8	417-926-3321	・・COVER {R.H.}	1	SN:B10001--
9	417-926-3410	・・SEAL	2	SN:B10001--
10	417-926-3420	・・SEAL	1	SN:B10001--
11	417-926-3330	・・LOCK ASS'Y{R.H.}	1	SN:B10001--
12	417-926-3341	・・SEAL	1	SN:B10001--
13	417-926-3350	・・LINK ASS'Y{R.H.}	2	SN:B10001--
14	417-926-3150	・・ROD	1	SN:B10001--
15	4239254220	・・ROD	1	SN:B10001--
16	423-925-4230	・・ROD	1	SN:B10001--
17	01580-10403	・・NUT	2	SN:B10001--
18	01023-60430	・・SCREW	1	SN:B10001--
19	417-926-3221	・・DAM	1	SN:B10001--
20	417-926-3370	・・KNOB	2	SN:B10001--
21	417-926-3250	・・SCREW	2	SN:B10001--
22	418-926-3923	・・COVER {R.H.}	1	SN:B10001--
23	01010-80616	・・BOLT	14	SN:B10001--
24	01010-80620	・・BOLT	4	SN:B10001--
25	01224-70616	・・SCREW	2	SN:B10001--
26	01225-70616	・・SCREW	5	SN:B10001--
27	01640-20610	・・WASHER	3	SN:B10001--
28	01643-30623	・・WASHER	23	SN:B10001--
29	04052-10633	・・PIN	3	SN:B10001--
30	08037-01008	・・GROMMET	3	SN:B10001--
31	14X-911-1540	・・KNOB	1	SN:B10001--
32	205-54-71830	・・SNAP	1	SN:B10001--
33	205-54-72220	・・HANDLE	1	SN:B10001--
34	417-926-3380	・・LOCK	1	SN:B10001--
35	418-926-3490	・・WASHER	5	SN:B10001--
36	419-54-16880	・・KNOB	1	SN:B10001--

Ref. K0210-56A5A Page 240610

WA200-5 S/N B10001-UP

ROPS CAB (DOOR R.H.)

Item	Part No.	Description	Qty	Options
37	421-09-31310	・・CAP ASS'Y	2	SN:B10001--
38	421-56-21720	・・CAP	1	SN:B10001--
39	423-926-3233	・・HANDLE	1	SN:B10001--
40	424-926-3270	・・HANDLE	1	SN:B10001--
41	424-926-3630	・・GROMMET	1	SN:B10001--
42	423-926-3860	・・GROMMET	1	SN:B10001--
43	417-926-3430	・・SHEET	1	SN:B10001--
44	417-926-3440	・・SHEET	2	SN:B10001--
45	417-926-3540	・・SEAL	1	SN:B10001--
46	417-923-3950	・・STOPPER	1	SN:B10001--
46A	22B-54-16340	・・SNAP (ROD)		SN:B10032--
47	01010-81016	・BOLT	6	SN:B10001--
48	01643-31032	・WASHER	6	SN:B10001--

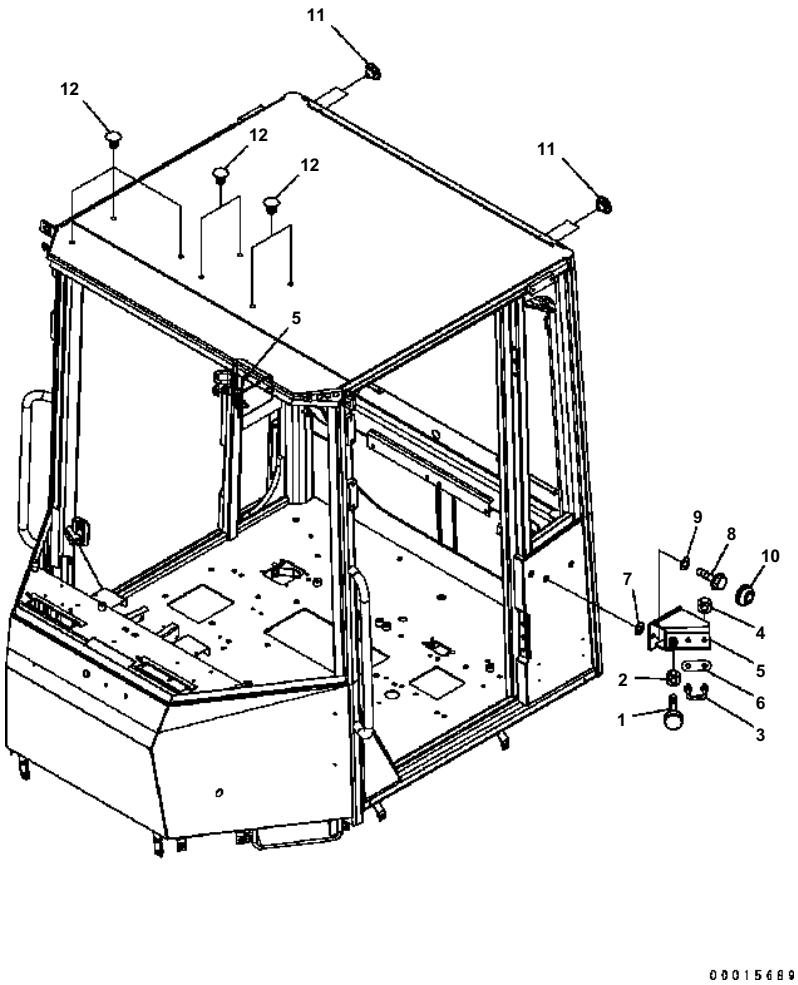

WA200-5 S/N B10001-UP

ROPS CAB (STOPPER)

Item	Part No.	Description	Qty	Options
	(418-926-3504)	CAB ASS'Y	1	SN:B10001--
THESE ASSEMBLIES CONSIST OF ALL PARTS SHOWN IN FIGS.K0210-51A5 TO K0210-58A5.				
1	20T-54-75290	· STOPPER	2	SN:B10001--
2	01580-11008	· NUT	2	SN:B10001--
3	20Y-54-35961	· STRIKER	2	SN:B10001--
4	01580-11008	· NUT	4	SN:B10001--
5	418-926-3760	· BRACKET	2	SN:B10001--
6	20Y-54-35710	· PLATE	2	SN:B10001--
7	07005-01412	· GASKET	6	SN:B10001--
8	01435-01025	· BOLT	4	SN:B10001--
9	01643-31032	· WASHER	4	SN:B10001--
10	363-54-31450	· CAP	4	SN:B10001--
11	426-56-21990	· PLUG	4	SN:B10001--
12	421-09-21210	· BUTTON	7	SN:B10001--

Ref. K0210-57A5 Page 240620

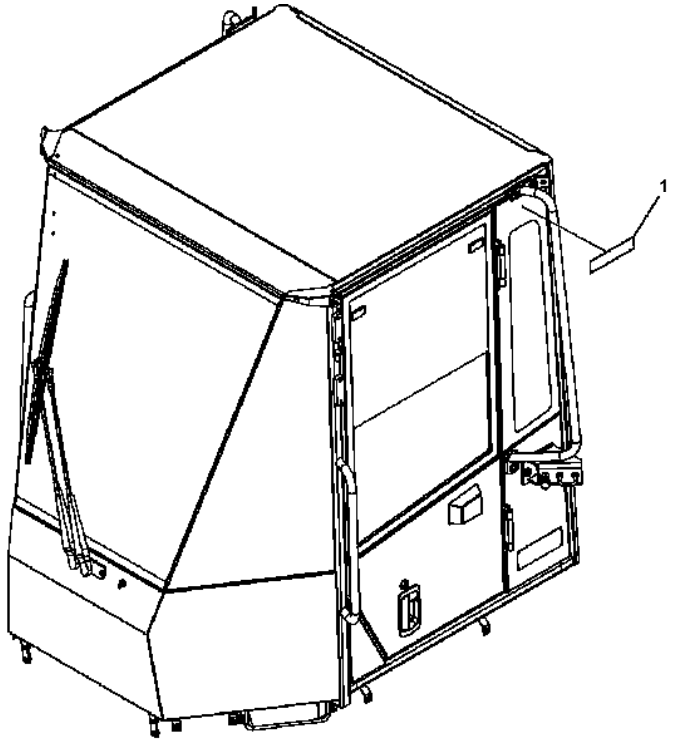

WA200-5 S/N B10001-UP

ROPS CAB (MARK)

Item	Part No.	Description	Qty	Options
	(418-926-3504)	CAB ASS'Y	1	SN:B10001--
THESE ASSEMBLIES CONSIST OF ALL PARTS SHOWN IN FIGS.K0210-51A5 TO K0210-58A5.				
1	418-93-31410	・ MARK {GALEO}	2	SN:B10001--B10379

Ref. K0210-58A5 Page 240630

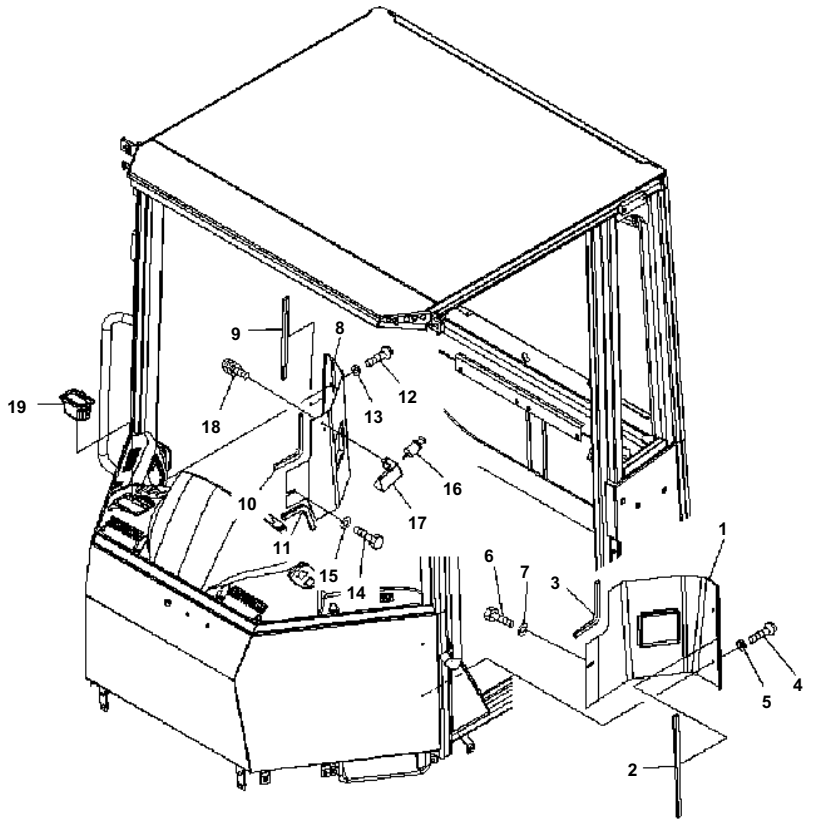

WA200-5 S/N B10001-UP

ROPS CAB (COVER)

Item	Part No.	Description	Qty	Options
1	418-926-3711	COVER {L.H.}	1	SN:B10001--
2	424-926-3240	FINISHER	1	SN:B10001--
3	424-926-3230	FINISHER	1	SN:B10001--
4	01225-70620	SCREW	2	SN:B10001--
5	23S-55-51970	WASHER	2	SN:B10001--
6	01010-80616	BOLT	1	SN:B10001--
7	01643-30623	WASHER	1	SN:B10001--
8	418-926-3722	COVER {R.H.}	1	SN:B10001--
9	424-926-3240	FINISHER	1	SN:B10001--
10	424-926-3230	FINISHER	1	SN:B10001--
11	22T-56-13210	SEAL	1	SN:B10001--
12	01225-70620	SCREW	2	SN:B10001--
13	23S-55-51970	WASHER	2	SN:B10001--
14	01010-80616	BOLT	1	SN:B10001--
15	01643-30623	WASHER	1	SN:B10001--
16	20Y-06-23472	LIGHTER	1	SN:B10001--
17	424-926-3280	BRACKET	1	SN:B10001--
18	421-09-21460	SCREW	2	SN:B10001--
19	20Y-06-21751	ASHTRAY	1	SN:B10001--

Ref. K0210-59A0 Page 240640

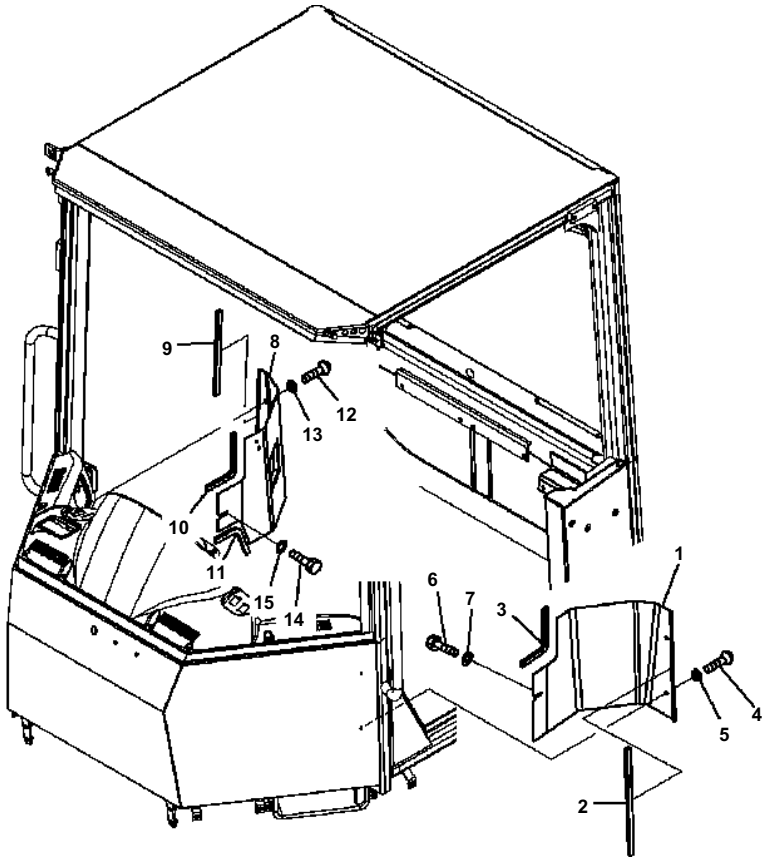

WA200-5 S/N B10001-UP

OPEN CAB (COVER)

Item	Part No.	Description	Qty	Options
1	418-921-3510	COVER {L.H.}	1	SN:B10001--
2	424-926-3240	FINISHER	1	SN:B10001--
3	424-926-3230	FINISHER	1	SN:B10001--
4	01225-70620	SCREW	2	SN:B10001--
5	23S-55-51970	WASHER	2	SN:B10001--
6	01010-80616	BOLT	1	SN:B10001--
7	01643-30623	WASHER	1	SN:B10001--
8	417-926-3520	COVER {R.H.}	1	SN:B10001--
9	424-926-3240	FINISHER	1	SN:B10001--
10	424-926-3230	FINISHER	1	SN:B10001--
11	22T-56-13210	SEAL	1	SN:B10001--
12	01225-70620	SCREW	2	SN:B10001--
13	23S-55-51970	WASHER	2	SN:B10001--
14	01010-80616	BOLT	1	SN:B10001--
15	01643-30623	WASHER	1	SN:B10001--

Ref. K0210-59A5 Page 240650

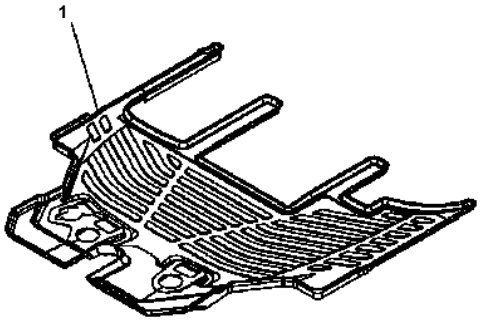

D0D0262E

WA200-5 S/N B10001-UP

FLOOR MAT

Item	Part No.	Description	Qty	Options
1	418-54-32412	MAT	1	SN:B10001--

Ref. K0310-01A0 Page 240660

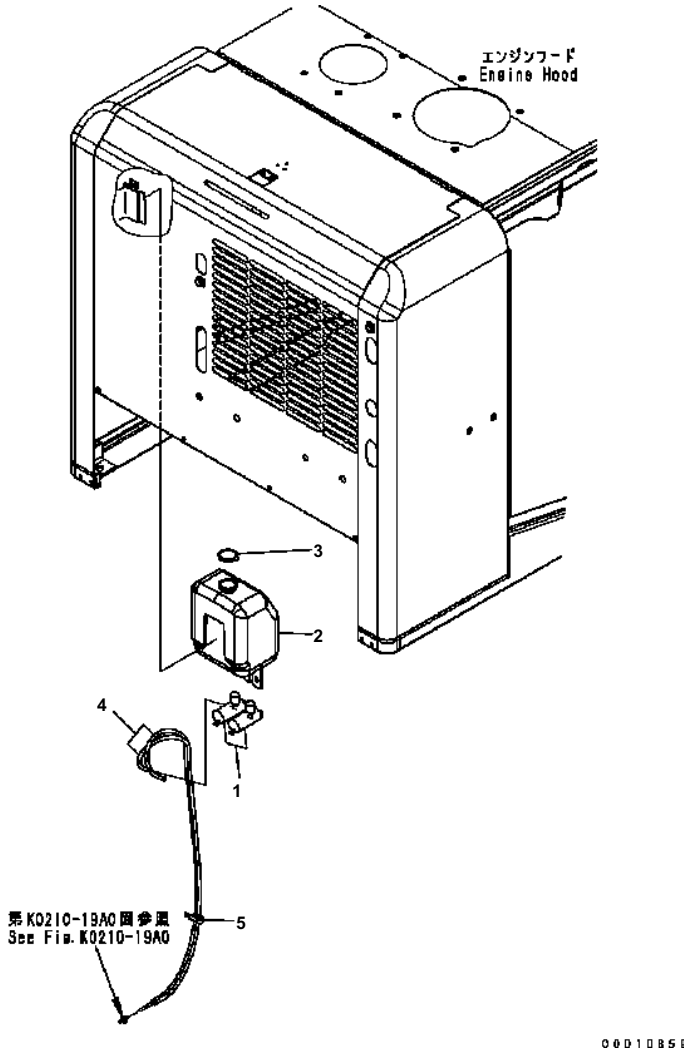

WA200-5 S/N B10001-UP

WINDOW WASHER

Item	Part No.	Description	Qty	Options
	423-947-1101	TANK ASS'Y	1	SN:B10001--
1	423-947-1110	・ PUMP ASS'Y	2	SN:B10001--
2	423-947-1121	・ TANK	1	SN:B10001--
3	423-947-2150	・・ CAP	1	SN:B10001--
4	418-07-36130	HOSE	2	SN:B10001--
5	04435-50812	CLIP	1	SN:B10001--

Ref. K0350-01A0 Page 240670

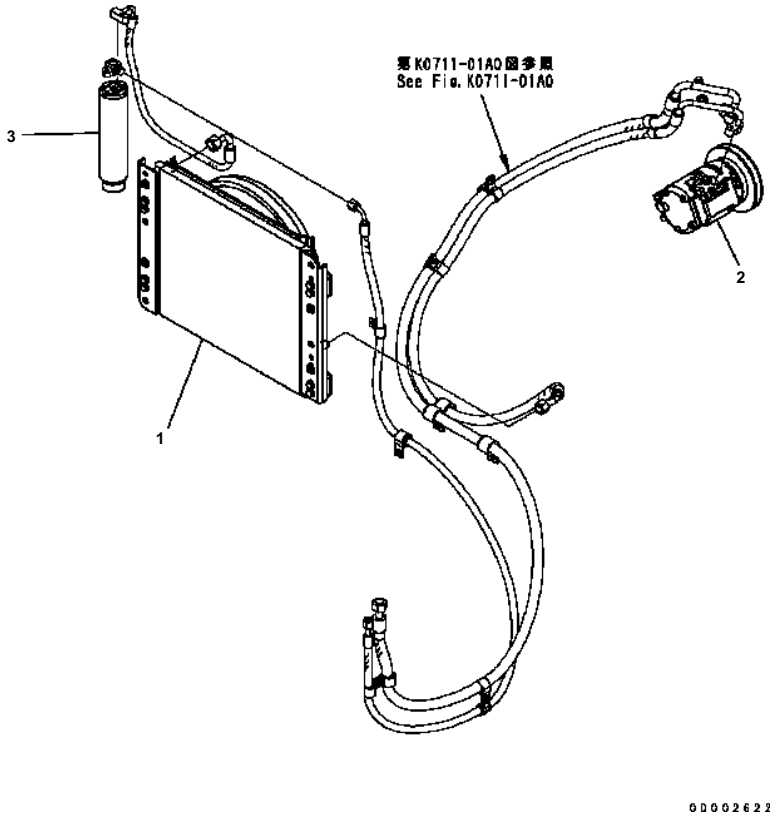

WA200-5 S/N B10001-UP

AIR CONDITIONER

Item	Part No.	Description	Qty	Options
	418-S62-3121	AIR CONDITIONER KIT	1	SN:B10001--
1	418-S62-3150	・ CONDENSER ASS'Y	1	SN:B10001--
	ND263500-0763	・・ MOTOR ASS'Y	1	SN:B10001--
2	418-S62-3160	・ COMPRESSOR ASS'Y	1	SN:B10001--
3	20Y-979-3120	・ TANK	1	SN:B10001--

Ref. K0710-01A0 Page 240680

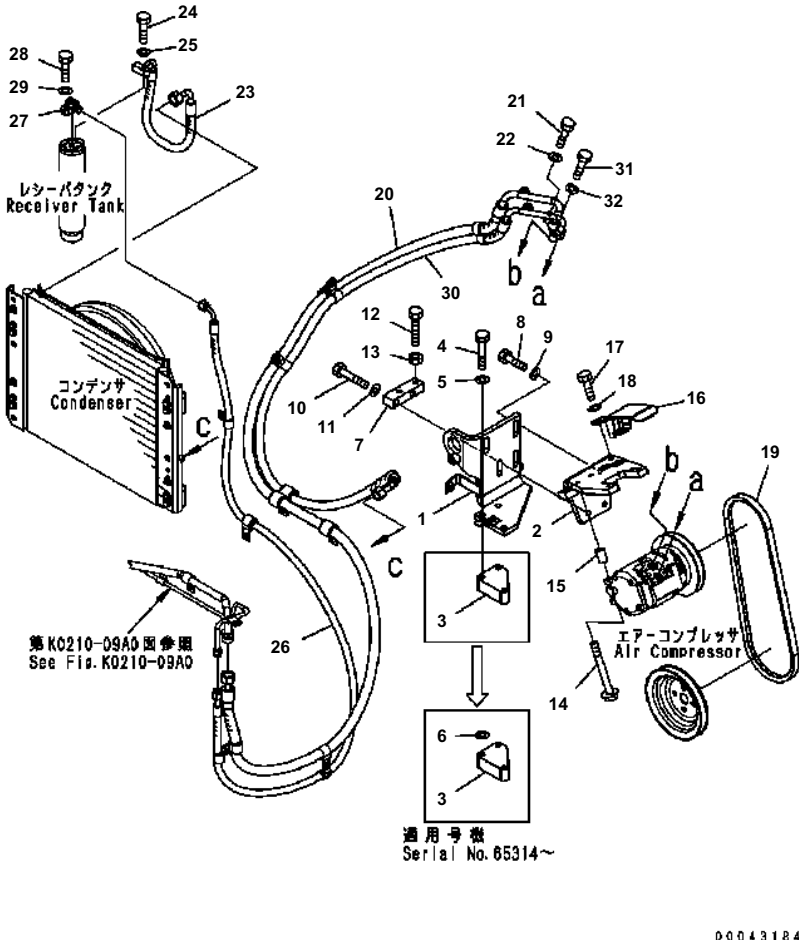

WA200-5 S/N B10001-UP

AIR CONDITIONER (MOUNTING AND PIPING)

Item	Part No.	Description	Qty	Options
1	418-S62-3173	BRACKET	1	SN:B10001--
2	418-S62-3183	BRACKET	1	SN:B10001--
3	11Y-01-11280	SPACER	1	SN:B10001--
4	01010-81080	BOLT	3	SN:B10001--
5	01643-31032	WASHER	3	SN:B10001--
6	01643-31032	WASHER	3	SN:B10001--
7	418-S62-3340	BLOCK	1	SN:B10001--
8	01010-81235	BOLT	2	SN:B10001--
9	01643-31232	WASHER	2	SN:B10001--
10	01010-81265	BOLT	2	SN:B10001--
11	01643-31232	WASHER	2	SN:B10001--
12	01016-51090	BOLT	2	SN:B10001--
13	01580-11008	NUT	2	SN:B10001--
14	6202-81-6810	BOLT	4	SN:B10001--
15	418-S62-3310	SPACER	4	SN:B10001--
16	418-S62-3291	COVER	1	SN:B10001--
17	01010-81020	BOLT	2	SN:B10001--
18	01643-31032	WASHER	2	SN:B10001--
19	04120-21744	V-BELT	1	SN:B10001--
20	418-S62-3242	HOSE	1	SN:B10001--
	20Y-979-3140	· O-RING	2	SN:B10001--
21	01010-80630	BOLT	1	SN:B10001--
22	01643-30623	WASHER	1	SN:B10001--
23	418-S62-3251	HOSE	1	SN:B10001--
24	01010-80625	BOLT	1	SN:B10001--
25	01643-30623	WASHER	1	SN:B10001--
26	418-S62-3261	HOSE	1	SN:B10001--
27	17A-911-1671	JOINT	1	SN:B10001--
28	01010-80625	BOLT	1	SN:B10001--
29	01643-30623	WASHER	1	SN:B10001--
30	418-S62-3232	HOSE	1	SN:B10001--
	20Y-979-3130	· O-RING	2	SN:B10001--
31	01010-80630	BOLT	1	SN:B10001--
32	01643-30623	WASHER	1	SN:B10001--

Ref. K0711-01A0 Page 240690

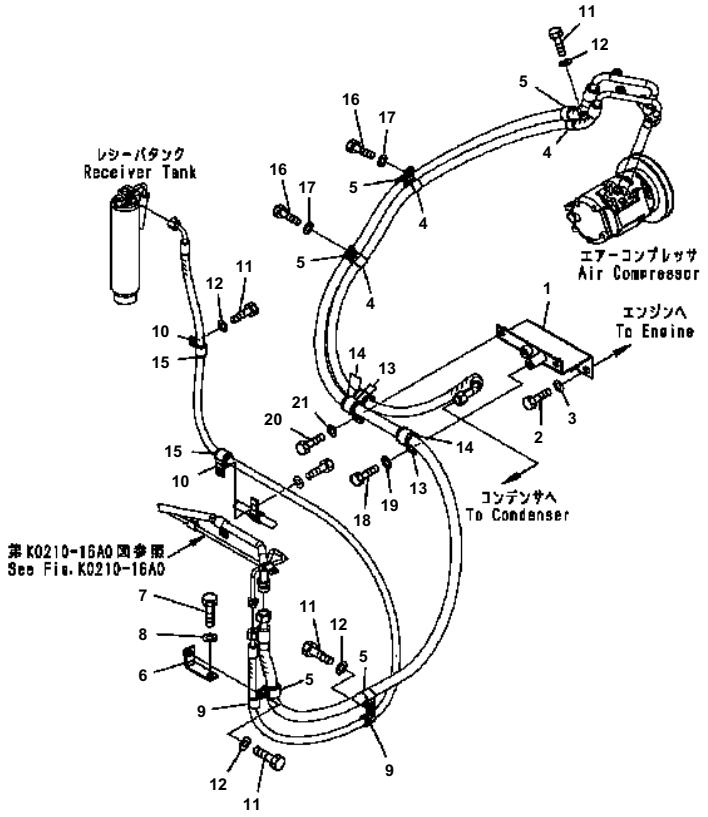

WA200-5 S/N B10001-UP

AIR CONDITIONER (PIPING)

Item	Part No.	Description	Qty	Options
1	418-07-32113	BRACKET	1	SN:B1000165353--
2	01010-81220	BOLT	2	SN:B1000165353--
3	01643-31232	WASHER	2	SN:B1000165353--
4	04434-51912	CLIP	3	SN:B10001--
5	04434-52112	CLIP	4	SN:B10001--
6	417-07-22380	PLATE	1	SN:B10001--
7	01010-81020	BOLT	1	SN:B10001--
8	01643-31032	WASHER	1	SN:B10001--
9	04434-51612	CLIP	2	SN:B10001--
10	04434-52112	CLIP	2	SN:B10001--
11	01010-81025	BOLT	4	SN:B10001--
12	01643-31032	WASHER	4	SN:B10001--
13	04434-52712	CLIP	4	SN:B10001--
14	07095-20420	CUSHION	4	SN:B10001--
15	07095-20314	CUSHION	2	SN:B10001--
16	01010-81025	BOLT	2	SN:B10001--
17	01643-31032	WASHER	2	SN:B10001--
18	01010-81025	BOLT	1	SN:B10001--
19	01643-31032	WASHER	1	SN:B10001--
20	01010-81025	BOLT	1	SN:B10001--
21	01643-31032	WASHER	1	SN:B10001--

Ref. K0711-02A0 Page 240700

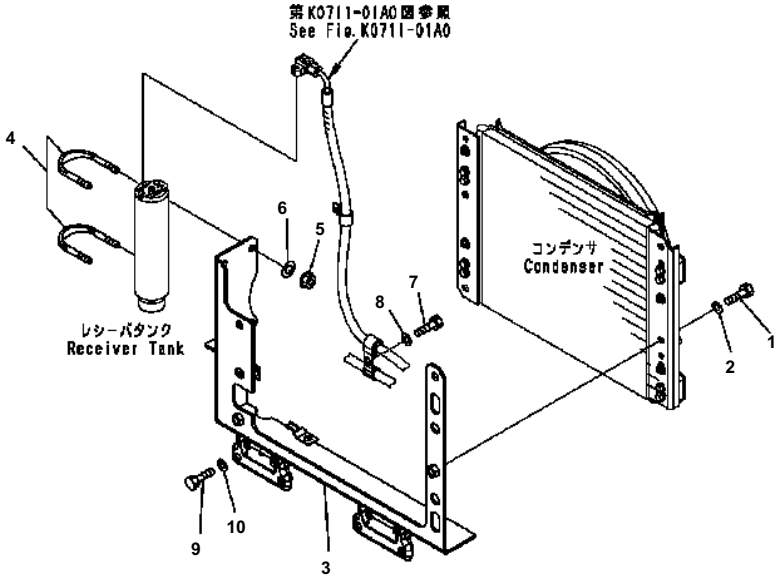

WA200-5 S/N B10001-UP

AIR CONDITIONER (CONDENSER MOUNTING)

Item	Part No.	Description	Qty	Options
1	01010-81225	BOLT	4	SN:B10001--
2	01643-31232	WASHER	4	SN:B10001--
3	418-S62-3322	BRACKET	1	SN:B10001--
4	07283-26155	CLIP	2	SN:B10001--
5	01597-01009	NUT	4	SN:B10001--
6	01643-31032	WASHER	4	SN:B10001--
7	01010-81020	BOLT	2	SN:B1000165313--
8	01643-31032	WASHER	2	SN:B1000165313--
9	01010-81225	BOLT	4	SN:B10001--
10	01643-31232	WASHER	4	SN:B10001--

Ref. K0711-03A0 Page 240710

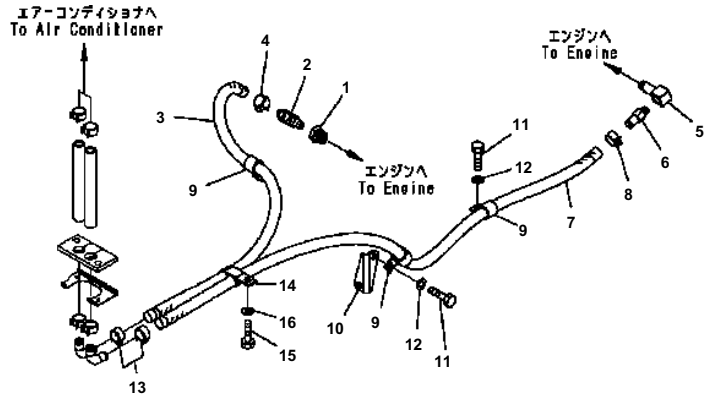

HEATER PIPING

Item	Part No.	Description	Qty	Options
1	124-Z11-1530	ADAPTER	1	SN:B10001--
2	567-07-15222	ELBOW	1	SN:B10416--
	567-07-15221	NIPPLE	1	SN:B10001--B10415
3	09483-10510	HOSE	1	SN:B10001--
4	09479-02400	CLAMP	1	SN:B10001--
5	418-07-25130	ELBOW	1	SN:B10001--B10296
6	416-942-1560	CONNECTOR	1	SN:B10001--
7	09483-10514	HOSE	1	SN:B10001--
8	09479-02400	CLAMP	1	SN:B10001--
9	04434-52312	CLIP	3	SN:B10001--
10	417-07-31160	BRACKET	1	SN:B10001--
11	01010-81020	BOLT	2	SN:B10001--
12	01643-31032	WASHER	2	SN:B10001--
13	09479-02400	CLAMP	2	SN:B10001--
14	421-07-11550	CLIP	1	SN:B10001--
15	01010-81020	BOLT	1	SN:B10001--
16	01643-31032	WASHER	1	SN:B10001--

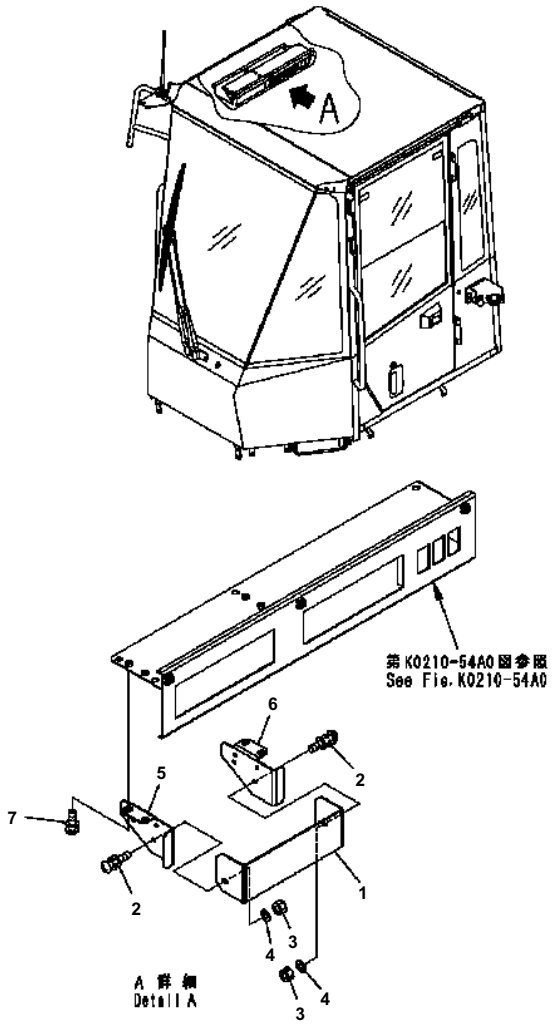

WA200-5 S/N B10001-UP

RADIO LESS (COVER)

Item	Part No.	Description	Qty	Options
1	421-925-3510	COVER	1	SN:B10001--
2	01023-60412	SCREW	2	SN:B10001--
3	01580-10403	NUT	2	SN:B10001--
4	01640-20408	WASHER	2	SN:B10001--
5	418-925-3471	PLATE	1	SN:B10001--
6	418-925-3481	PLATE	1	SN:B10001--
7	01023-10510	SCREW	4	SN:B10001--

Ref. K0810-01A1 Page 240730

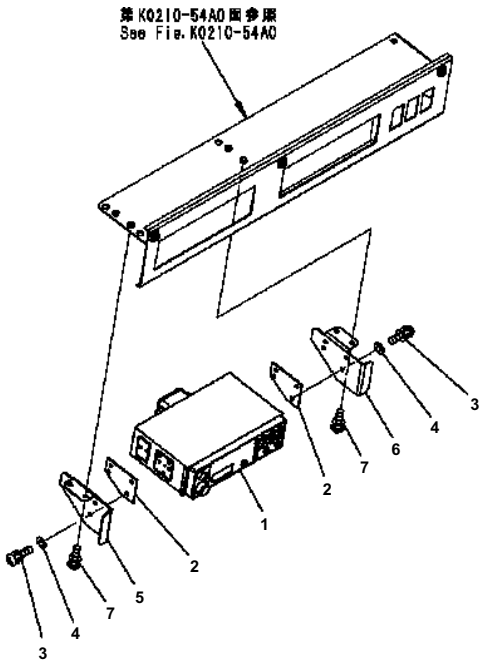

DDDD9987

WA200-5 S/N B10001-UP

RADIO (CASSETTE, AM,FM)

Item	Part No.	Description	Qty	Options
1	425-S67-2160	CASSETTE STEREO	1	SN:B10001--
	425-S67-2180	・ KNOB KIT	1	SN:B10001--
	08040-00300	・ FUSE¤ 3A	1	SN:B10001--
	08040-00100	・ FUSE¤ 1A	1	SN:B10001--
2	421-925-3140	PLATE	2	SN:B10001--
3	01023-60412	SCREW	4	SN:B10001--
4	01601-20410	WASHER	2	SN:B10001--
5	418-925-3471	PLATE	1	SN:B10001--
6	418-925-3481	PLATE	1	SN:B10001--
7	01023-10510	SCREW	4	SN:B10001--

Ref. K0810-01A2 Page 240740

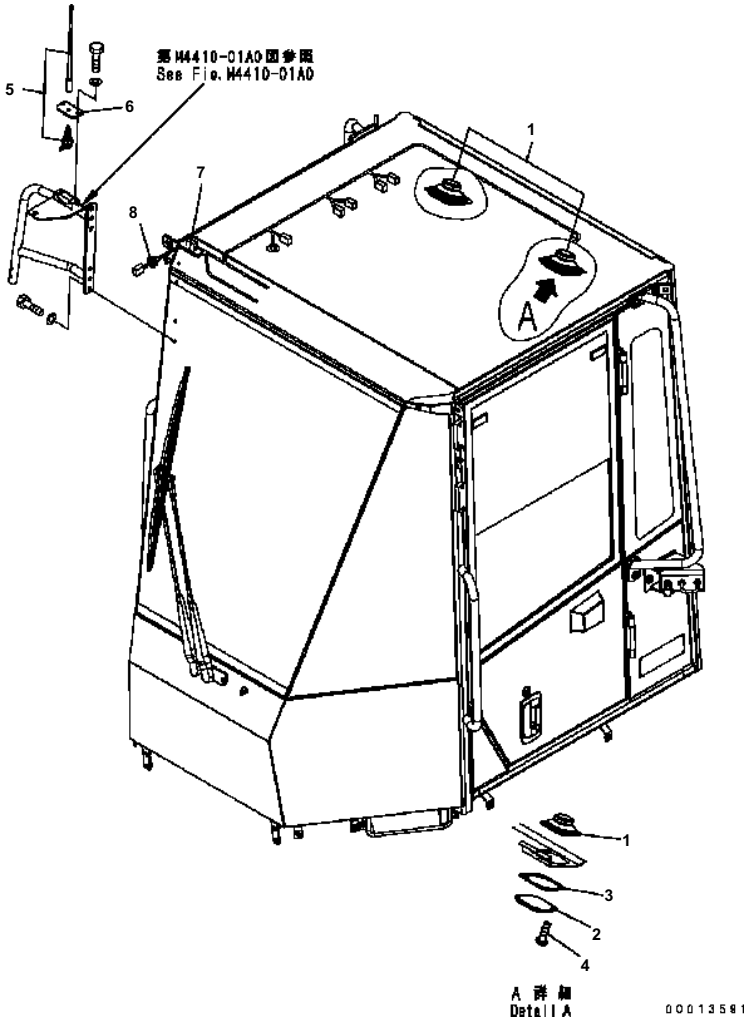

WA200-5 S/N B10001-UP

FLOOR (ANTENNA, SPEAKER)

Item	Part No.	Description	Qty	Options
1	11Y-979-1950	SPEAKER	2	SN:B10001--
2	418-967-2150	COVER	2	SN:B10001--
3	418-967-2230	PLATE	2	SN:B10001--
4	01220-40420	SCREW	8	SN:B10001--
5	198-Z11-4610	RUBBER ANTENNA	1	SN:B10001--
6	416-926-3493	PLATE	1	SN:B10001--
7	417-926-3460	CONDUIT	1	SN:B10001--
8	08037-10610	GROMMET	1	SN:B10001--

Ref. K0810-01A3 Page 240741

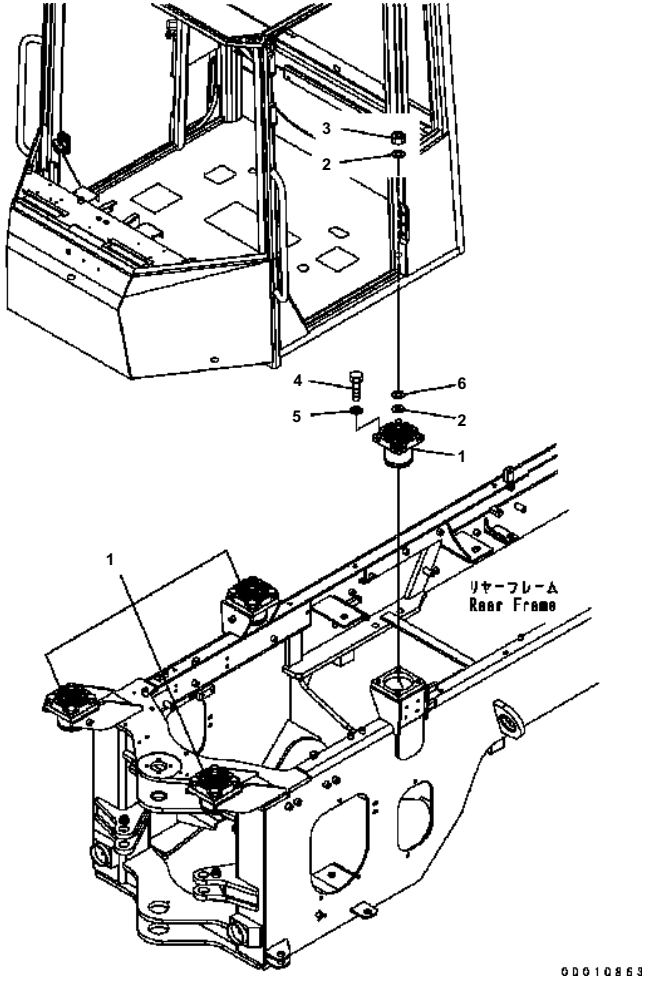

WA200-5 S/N B10001-UP

FLOOR SUPPORT

Item	Part No.	Description	Qty	Options
1	418-54-33110	VISCOUS MOUNT	4	SN:B10001--
2	01643-32460	WASHER	8	SN:B10001--
3	01596-02419	NUT	4	SN:B10001--
4	01010-81845	BOLT	16	SN:B10001--
5	01643-31845	WASHER	16	SN:B10001--
6	561-40-41210	SHIM¤ 1.2MM	4	SN:B10001--

Ref. K4100-01A0 Page 240750

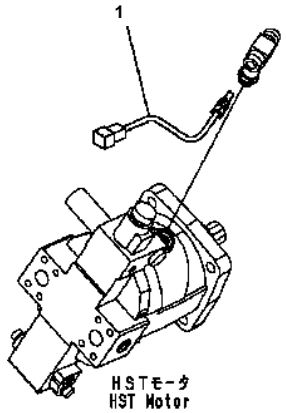

00002528

WA200-5 S/N B10001-UP

GAUGE AND SENSOR

Item	Part No.	Description	Qty	Options
1	7861-92-3320	SENSOR	1	SN:B10001--

Ref. K4220-01A0 Page 240760

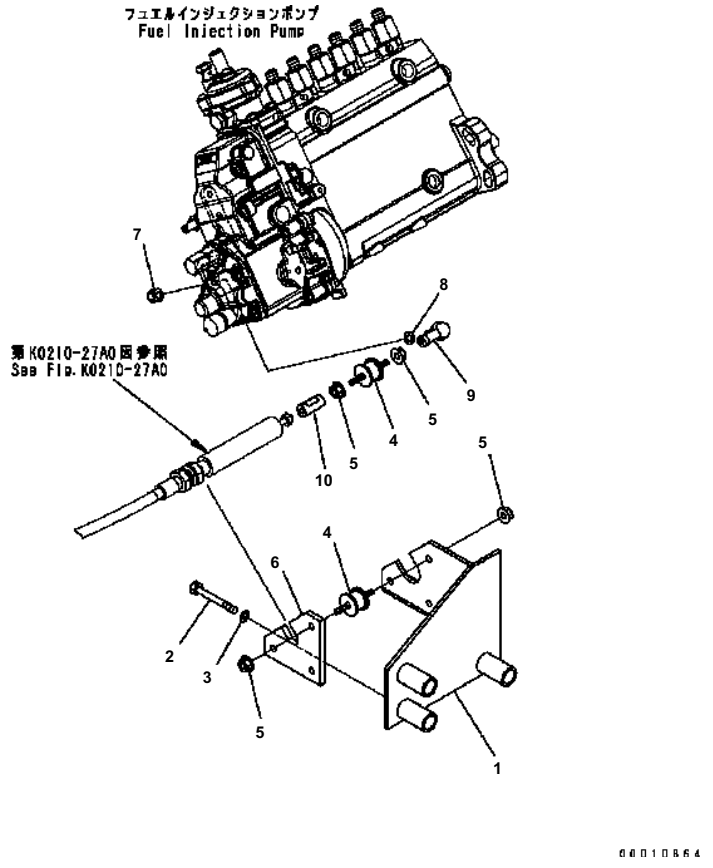

WA200-5 S/N B10001-UP

ENGINE CONTROL

Item	Part No.	Description	Qty	Options
1	418-43-31113	BRACKET	1	SN:B10001--
2	01010-80855	BOLT	3	SN:B10001--
3	01643-30823	WASHER	3	SN:B10001--
4	424-43-11240	CUSHION	4	SN:B10001--
5	01584-00605	NUT	8	SN:B10001--
6	421-43-11261	PLATE	1	SN:B10001--
7	01596-00606	NUT	1	SN:B10001--
8	01643-30623	WASHER	1	SN:B10001--
9	04256-40615	JOINT	1	SN:B10001--
10	421-43-11330	ROD	1	SN:B10001--

Ref. K4410-01A0 Page 240770

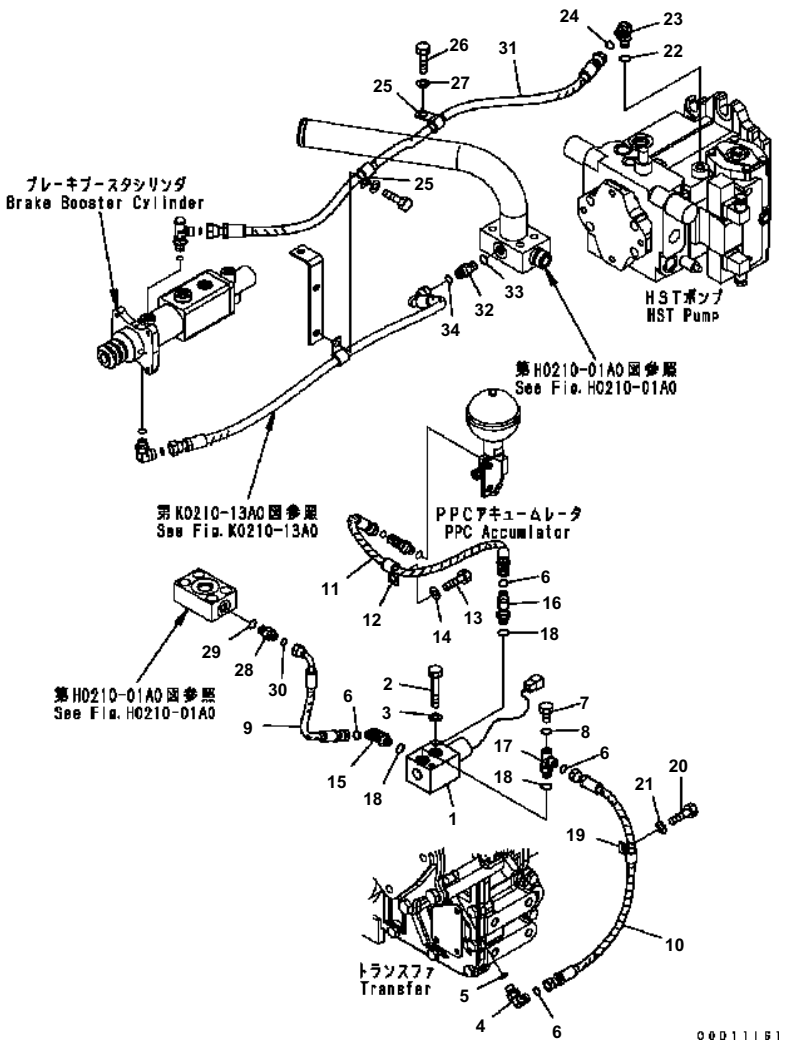

WA200-5 S/N B10001-UP

INCHING CONTROL

Item	Part No.	Description	Qty	Options
1	417-18-31111	SOLENOID VALVE ASS'Y {CLUTCH}	1	SN:B10001--
2	01010-80870	BOLT	2	SN:B10001--
3	01643-30823	WASHER	2	SN:B10001--
4	02782-10210	ELBOW	1	SN:B10001--
5	07002-11423	O-RING	1	SN:B10001--
6	02896-11008	O-RING	4	SN:B10001--
7	07040-11007	PLUG	1	SN:B10001--
8	07002-11023	O-RING	1	SN:B10001--
9	417-18-31380	HOSE	1	SN:B10001--
10	417-18-31170	HOSE	1	SN:B10001--
11	418-18-31341	HOSE¤ 560MM	1	SN:B10001--
12	04434-51312	CLIP	1	SN:B10001--
13	01010-81225	BOLT	1	SN:B10001--
14	01643-31232	WASHER	1	SN:B10001--
15	21W-62-43980	ELBOW	1	SN:B10001--
16	21W-62-43970	ELBOW	1	SN:B10001--
17	418-18-31111	ELBOW	1	SN:B10001--
18	07000-12011	O-RING	3	SN:B10001--
19	04434-51210	CLIP	1	SN:B10001--
20	01010-81020	BOLT	1	SN:B10001--
21	01643-31032	WASHER	1	SN:B10001--
22	07000-12011	O-RING	1	SN:B10001--
23	418-T80-3281	ELBOW	1	SN:B10001--
24	02896-11009	O-RING	1	SN:B10001--
25	04434-51610	CLIP	2	SN:B10001--
26	01010-81020	BOLT	1	SN:B10001--
27	01643-31032	WASHER	1	SN:B10001--
28	02781-00210	UNION	1	SN:B10001--
29	07002-11423	O-RING	1	SN:B10001--
30	02896-11008	O-RING	1	SN:B10001--
31	417-18-31140	HOSE	1	SN:B10001--
32	02781-0031D	UNION	1	SN:B10001--
33	07002-11423	O-RING	1	SN:B10001--
34	02896-11009	O-RING	1	SN:B10001--

Ref. K4450-01A0 Page 240780

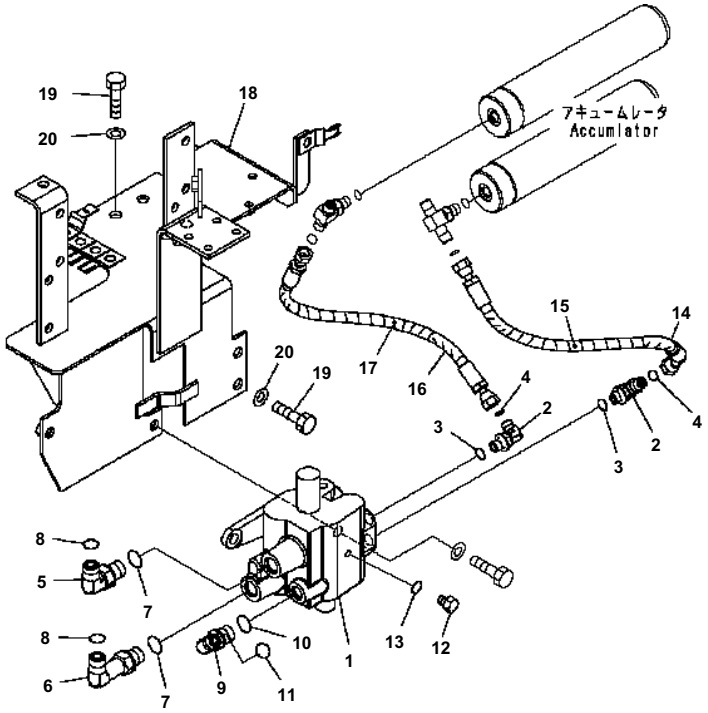

WA200-5 S/N B10001-UP

BRAKE CONTROL (CHARGE VALVE)

Item	Part No.	Description	Qty	Options
1	(417-43-37201)	CHARGE VALVE	1	SN:B10001--
2	21W-62-43980	ELBOW	2	SN:B10001--
3	07000-12011	O-RING	2	SN:B10001--
4	02896-11008	O-RING	2	SN:B10001--
5	418-62-35111	ELBOW	1	SN:B10001--
6	418-62-35120	ELBOW	1	SN:B10001--
7	07000-12018	O-RING	2	SN:B10001--
8	02896-11012	O-RING	2	SN:B10001--
9	56B-88-12320	ELBOW	1	SN:B10001--
10	07000-12014	O-RING	1	SN:B10001--
11	02896-11009	O-RING	1	SN:B10001--
12	07040-11007	PLUG	1	SN:B10001--
13	07002-11023	O-RING	1	SN:B10001--
14	418-43-37251	HOSE	1	SN:B10001--
15	08210-01203	・ SPIRAL TUBE	1	SN:B10001--
16	418-43-37262	HOSE	1	SN:B10001--
17	08210-01202	・ SPIRAL TUBE	1	SN:B10001--
18	417-43-37942	BRACKET	1	SN:B10001--
19	01010-81225	BOLT	6	SN:B10001--
20	01643-31232	WASHER	6	SN:B10001--

Ref. K4460-01A0 Page 240790

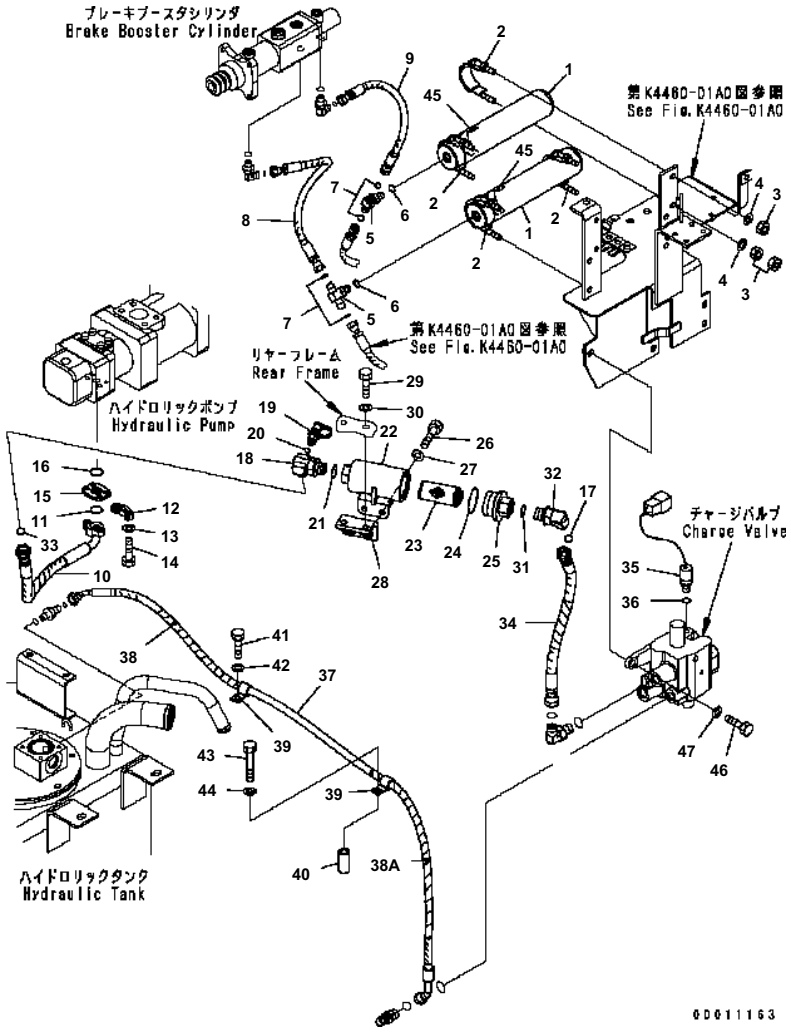

WA200-5 S/N B10001-UP

BRAKE CONTROL (ACCUMULATOR)

Item	Part No.	Description	Qty	Options
1	418-43-37401	ACCUMULATOR	2	SN:B10001--
2	417-43-37140	CLIP	4	SN:B10001--
3	01582-11008	NUT	12	SN:B10001--
4	01643-31032	WASHER	8	SN:B10001--
5	417-43-37410	TEE	2	SN:B10001--
6	07000-12011	O-RING	2	SN:B10001--
7	02896-11008	O-RING	4	SN:B10001--
8	02753-00205	HOSE	1	SN:B10001--
9	02765-B02A3	HOSE	1	SN:B10001--
10	417-43-37132	HOSE	1	SN:B10001--
11	07000-12021	O-RING	1	SN:B10001--
12	07371-30400	FLANGE	2	SN:B10001--
13	01643-50823	WASHER	4	SN:B10001--
14	01010-80845	BOLT	4	SN:B10001--
15	07373-20400	SPACER	1	SN:B10001--
16	07000-12021	O-RING	1	SN:B10001--
17	02896-11012	O-RING	1	SN:B10001--
18	416-43-37690	ELBOW	1	SN:B10001--
19	799-101-5220	NIPPLE	1	SN:B10001--
20	07002-11023	O-RING	1	SN:B10001--
21	07002-12434	O-RING	1	SN:B10001--
22	421-43-22562	CASE	1	SN:B10001--
23	421-43-27920	ELEMENT	1	SN:B10001--
24	07002-15234	O-RING	1	SN:B10001--
25	421-43-22571	CAP	1	SN:B10001--
26	01010-81030	BOLT	2	
27	01643-31032	WASHER	2	
28	417-43-37970	BRACKET	1	SN:B10001--
29	01010-81045	BOLT	2	SN:B10001--
30	01643-31032	WASHER	2	SN:B10001--
31	07002-12434	O-RING	1	SN:B10001--
32	11Y-62-12630	ELBOW	1	SN:B10001--
33	02896-11012	O-RING	1	SN:B10001--
34	417-43-37961	HOSE	1	SN:B10001--
35	421-43-22912	SWITCH {PRESSURE}	1	SN:B10001--
36	07002-11423	O-RING	1	SN:B10001--
37	418-43-37383	HOSE	1	SN:B10001--
38	08210-01803	・ SPIRAL TUBE	1	SN:B10001--
38A	08210-01804	・ SPIRAL TUBE	1	SN:B10001--
39	04434-51610	CLIP	2	SN:B10001--

Ref. K4460-02A0 Page 240800

WA200-5 S/N B10001-UP

BRAKE CONTROL (ACCUMULATOR)

Item	Part No.	Description	Qty	Options
40	195-979-5190	COLLAR	1	SN:B10001--
41	01010-81030	BOLT	1	SN:B10001--
42	01643-31032	WASHER	1	SN:B10001--
43	01010-81075	BOLT	1	SN:B10001--
44	01643-31032	WASHER	1	SN:B10001--
45	09659-A057B	PLATE¤ SAFETY	2	SN:B10161--
	09659-A057A	PLATE¤ SAFETY	2	SN:B10001--B10160
46	01010-81230	BOLT	2	SN:B10001--
47	01643-31232	WASHER	2	SN:B10001--

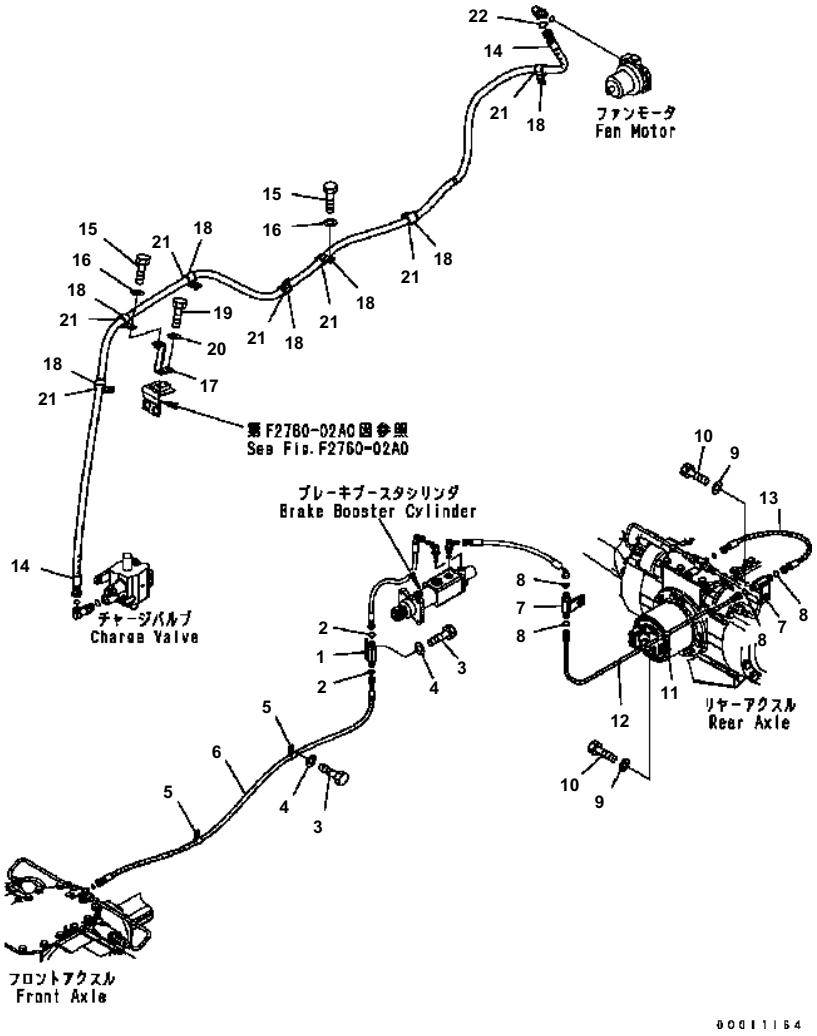

WA200-5 S/N B10001-UP

BRAKE CONTROL (BRAKE PIPING, FAN MOTOR LINE)

Item	Part No.	Description	Qty	Options
1	417-43-37980	JOINT	1	SN:B10001--
2	02896-11009	O-RING	2	SN:B10001--
3	01010-81020	BOLT	3	SN:B10001--
4	01643-31032	WASHER	3	SN:B10001--
5	04434-51210	CLIP	2	SN:B10001--
6	417-43-37191	HOSE	1	SN:B10001--
7	416-43-37420	JOINT	2	SN:B10001--
8	02896-11009	O-RING	4	SN:B10001--
9	01643-31032	WASHER	3	SN:B10001--
10	01010-81020	BOLT	3	SN:B10001--
11	04434-51510	CLIP	1	SN:B10001--
12	417-43-37172	TUBE	1	SN:B10001--
13	418-43-37371	HOSE	1	SN:B10001--
14	418-03-33314	HOSE	1	SN:B10001--
15	01010-81020	BOLT	6	SN:B10001--
16	01643-31032	WASHER	6	SN:B10001--
17	418-03-33340	BRACKET	1	SN:B10001--
18	04434-52711	CLIP	7	SN:B10001--
19	01010-81020	BOLT	2	SN:B10001--
20	01643-31032	WASHER	2	SN:B10001--
21	07095-20420	CUSHION	7	SN:B10001--
22	02896-11012	O-RING	1	SN:B10001--

Ref. K4460-03A0 Page 240810

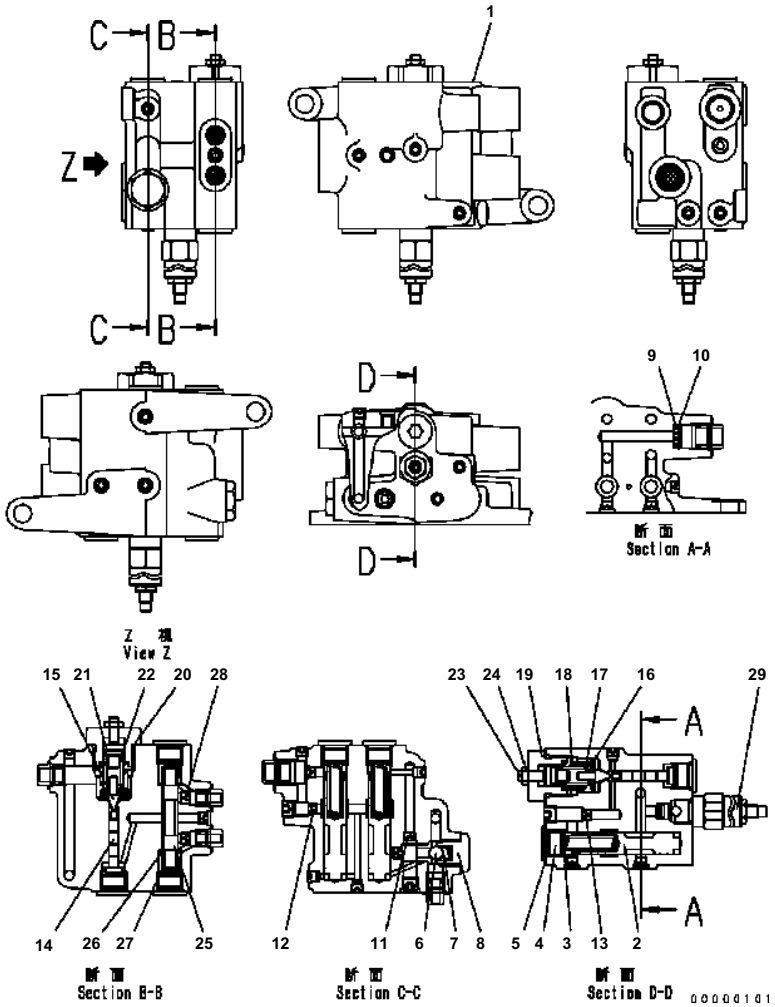

WA200-5 S/N B10001-UP

CHARGE VALVE (BRAKE) (INNER PARTS)

Item	Part No.	Description	Qty	Options
1	417-43-37201	CHARGE VALVE	1	SN:B10001--
2	☆	· SPOOL	2	SN:B10001--
3	417-43-37530	· SPRING	2	SN:B10001--
4	417-43-37540	· PLUG	5	SN:B10001--
5	417-43-37550	· O-RING	6	SN:B10001--
6	417-43-37560	· PLUG	1	SN:B10001--
7	417-43-37570	· SPRING	1	SN:B10001--
8	417-43-37580	· PLUG	1	SN:B10001--
9	417-43-37591	· FILTER	1	SN:B10001--
10	417-43-37610	· O-RING	1	SN:B10001--
11	417-43-37620	· ORIFICE	1	SN:B10001--
12	417-43-37950	· ORIFICE	1	SN:B10001--
13	417-43-37640	· ORIFICE	1	SN:B10001--
14	417-43-37650	· PLUNGER	1	SN:B10001--
15	417-43-37660	· VALVE	1	SN:B10001--
16	417-43-37670	· SPRING	1	SN:B10001--
17	417-43-37680	· SPRING	1	SN:B10001--
18	417-43-37690	· SPRING	1	SN:B10001--
19	417-43-37710	· PLUG	1	SN:B10001--
20	417-43-37720	· O-RING	1	SN:B10001--
21	417-43-37730	· SEAT	1	SN:B10001--
22	417-43-37740	· O-RING	1	SN:B10001--
23	417-43-37750	· SCREW	1	SN:B10001--
24	417-43-37760	· NUT	1	SN:B10001--
25	☆	· SPOOL	1	SN:B10001--
26	417-43-37780	· WASHER	2	SN:B10001--
27	417-43-37790	· SPRING	2	SN:B10001--
28	417-43-37810	· ORIFICE	3	SN:B10001--
29	417-43-37820	· RELIEF VALVE	1	SN:B10001--

Ref. K4460-51A0 Page 240820

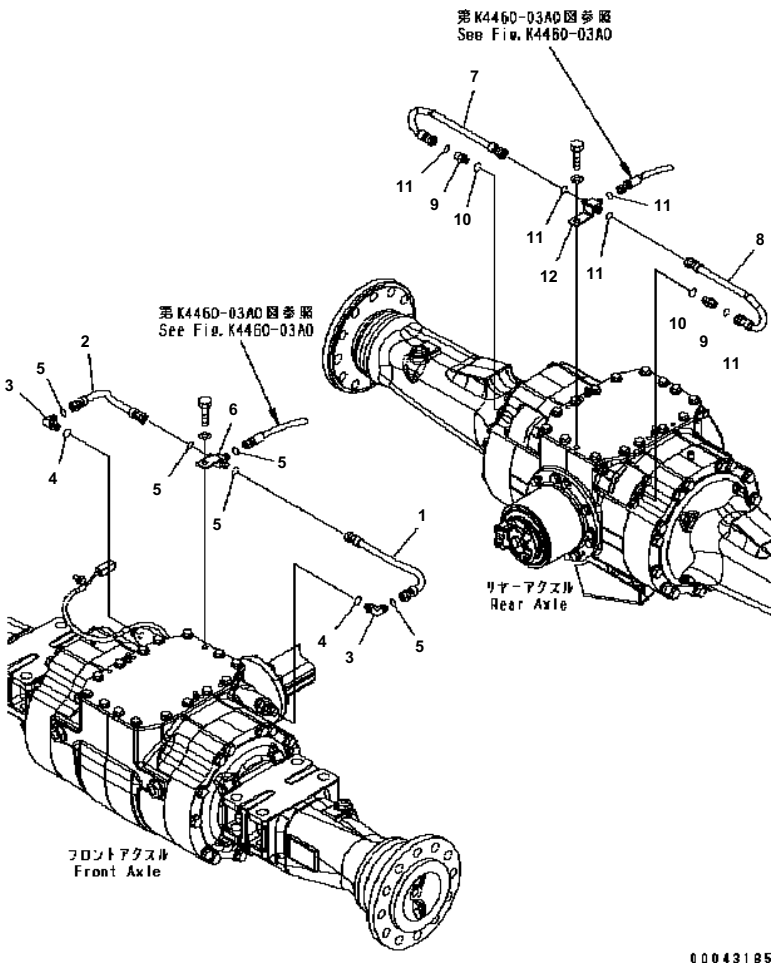

WA200-5 S/N B10001-UP

BRAKE PIPING

Item	Part No.	Description	Qty	Options
1	418-43-37523	TUBE	1	SN:B10001--
2	418-43-37543	TUBE	1	SN:B10001--
3	02782-10311	ELBOW	2	SN:B10001--
4	07002-11423	O-RING	2	SN:B10001--
5	02896-11009	O-RING	5	SN:B10001--
6	416-43-37430	TEE	1	SN:B10001--
7	418-43-37490	TUBE	1	SN:B10001--
8	418-43-37480	TUBE	1	SN:B10001--
9	02781-00311	UNION	2	SN:B10001--
10	07002-11423	O-RING	2	SN:B10001--
11	02896-11009	O-RING	5	SN:B10001--
12	416-43-37440	TEE	1	SN:B10001--

Ref. K4470-01A0 Page 240830

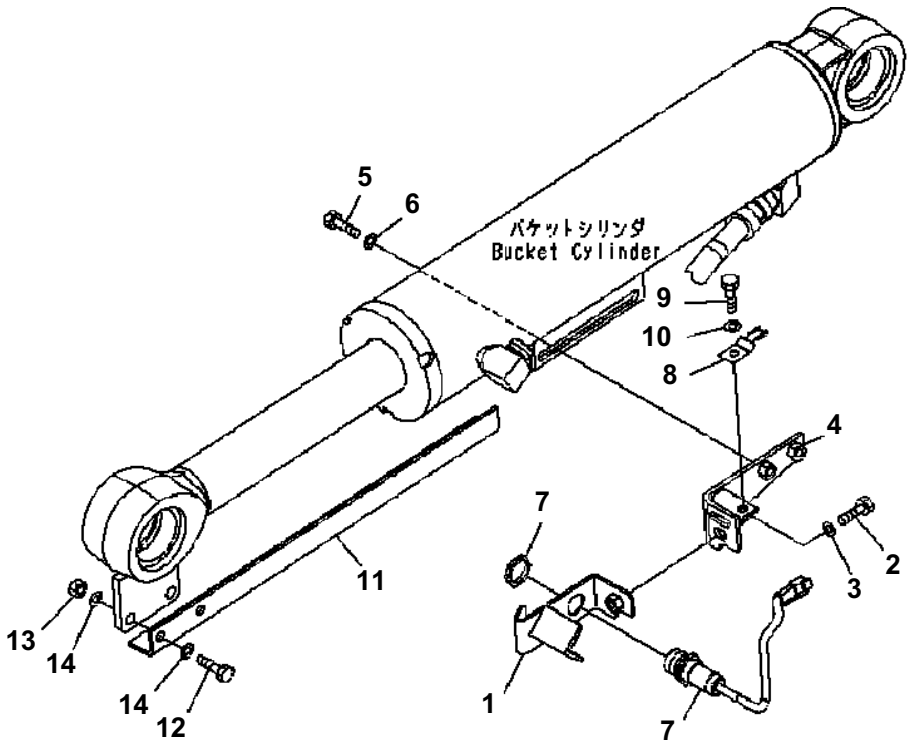

WA200-5 S/N B10001-UP

BUCKET POSITIONER

Item	Part No.	Description	Qty	Options
1	417-43-39123	BRACKET	1	SN:B10001--
2	01010-81225	BOLT	1	SN:B10001--
3	01643-31232	WASHER	1	SN:B10001--
4	417-43-39161	BRACKET	1	SN:B10001--
5	01010-81230	BOLT	2	SN:B10001--
6	130-43-64260	COLLAR	2	SN:B10001--
7	56B-06-15610	SWITCH	1	SN:B10001--
8	08193-20010	CLIP	1	SN:B10001--
9	01010-81016	BOLT	1	SN:B10001--
10	01643-31032	WASHER	1	SN:B10001--
11	417-44-31110	PLATE	1	SN:B10001--
12	01010-81235	BOLT	2	SN:B10001--
13	01580-11210	NUT	2	SN:B10001--
14	01643-31232	WASHER	4	SN:B10001--

Ref. K4504-01A0 Page 240840

GUARD

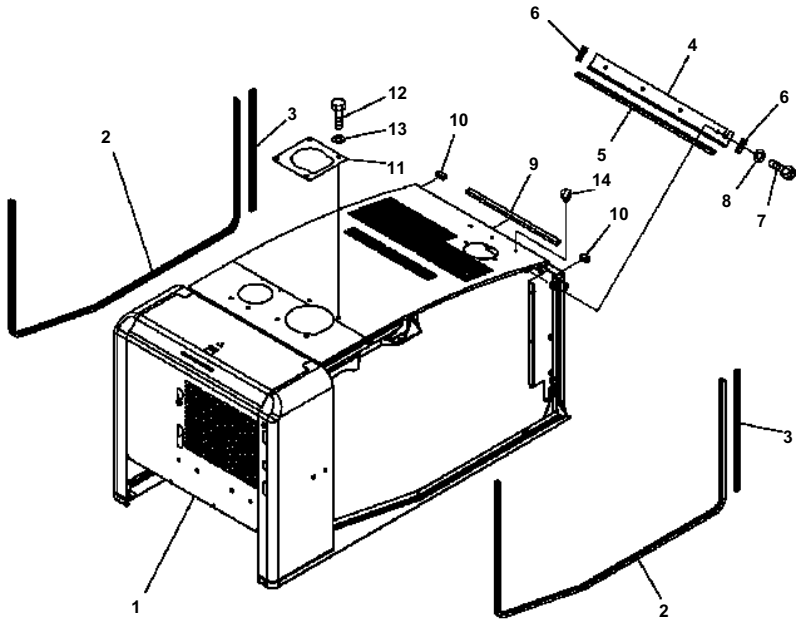

WA200-5 S/N B10001-UP

HOOD

Item	Part No.	Description	Qty	Options
1	417-54-B3112	HOOD	1	SN:B10260--
	417-54-B3111	HOOD	1	SN:B10161--B10259
	417-54-B3110	HOOD	1	SN:B10001--B10160
2	418-54-32480	SEAL	2	SN:B10001--
3	418-54-32490	SEAL	2	SN:B10001--
4	418-54-31362	PLATE	1	SN:B10001--
5	418-54-33260	SEAL	1	SN:B10001--
6	415-54-31210	SEAL	2	SN:B10001--
7	01010-80816	BOLT	4	SN:B10001--
8	01643-30823	WASHER	4	SN:B10001--
9	418-54-31990	SHEET	1	SN:B10001--
10	418-54-33250	SHEET	2	SN:B10001--
11	417-54-31482	COVER	1	SN:B10001--
12	01010-81220	BOLT	4	SN:B10001--
13	130-43-64260	WASHER	4	SN:B10001--
14	07049-01012	PLUG	4	SN:B10236--

Ref. M4100-01A0 Page 270010

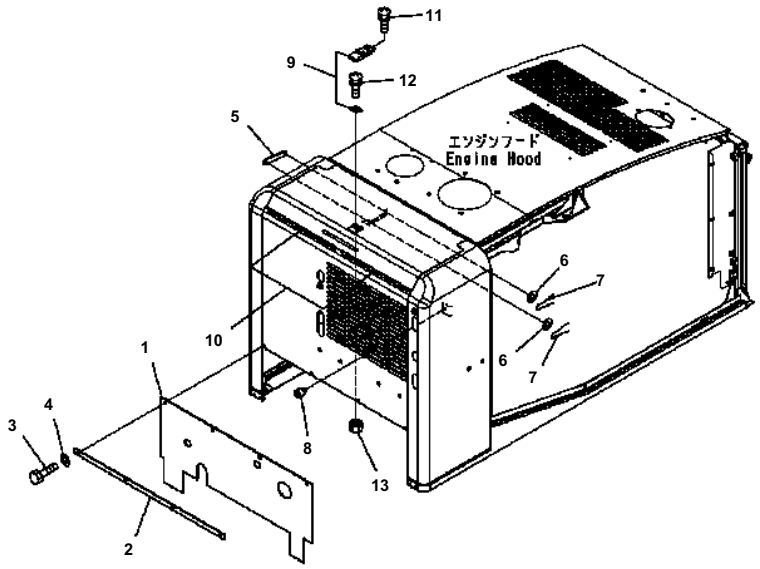

WA200-5 S/N B10001-UP

HOOD (BULK HEAD)

Item	Part No.	Description	Qty	Options
1	418-54-31594	SHEET	1	SN:B10001--
2	417-54-21431	PLATE	1	SN:B10286--
	417-54-21430	PLATE	1	SN:B10001--B10285
3	01010-80820	BOLT	4	SN:B10001--
4	01643-30823	WASHER	4	SN:B10001--
5	418-54-31832	PLATE	1	SN:B10001--
6	01643-30623	WASHER	2	SN:B10001--
7	04050-11612	PIN	2	SN:B10001--
8	415-54-11980	CUSHION	1	SN:B10001--
9	421-09-12322	HOLDER	1	SN:B10001--
10	418-54-33130	SEAL	2	SN:B10001--
11	01023-10414	SCREW	3	SN:B10001--
12	01023-10420	SCREW	2	SN:B10001--
13	01580-60403	NUT	5	SN:B10001--

Ref. M4100-02A0 Page 270020

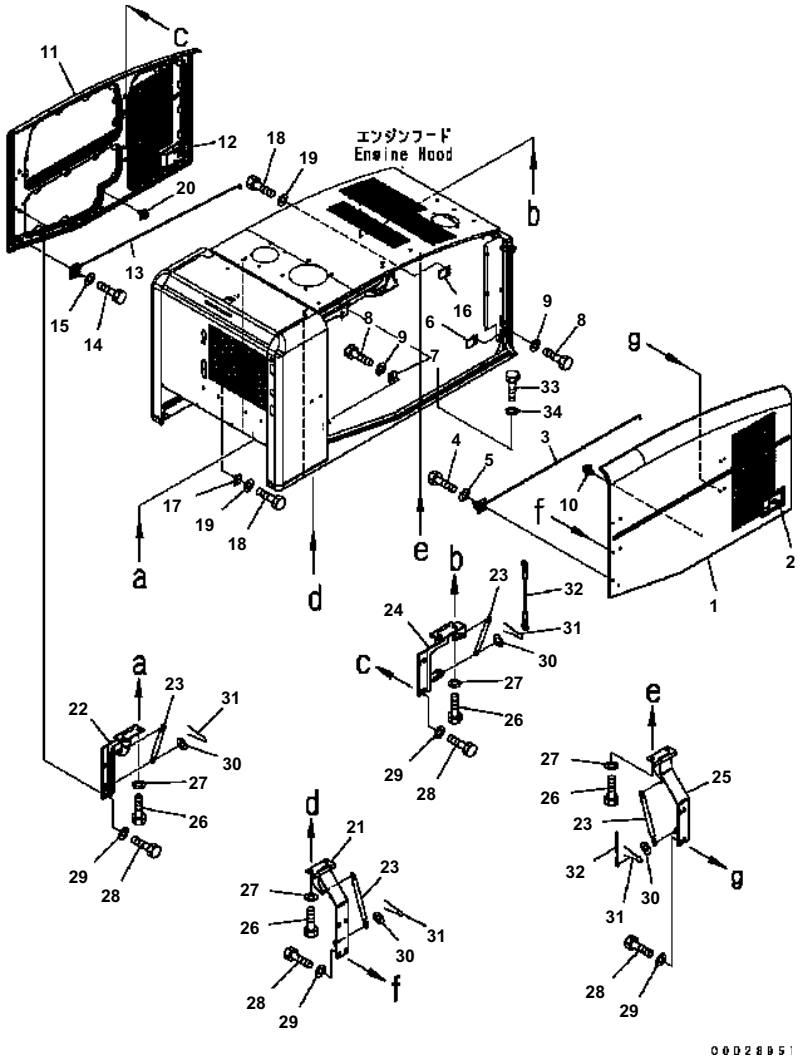

WA200-5 S/N B10001-UP

HOOD (DOOR)

Item	Part No.	Description	Qty	Options
1	419-54-B4131	DOOR {L.H.}	1	SN:B10260--
	419-54-B4130	DOOR {L.H.}	1	SN:B10001--B10259
2	421-54-31740	・ LOCK ASS'Y (WELDED)	1	SN:B10001--
	418-54-31493	LATCH ASS'Y	1	SN:B10001--
3	418-54-B2510	ROD {L.H.}	1	SN:B10211--
4	01010-81020	BOLT	2	SN:B10001--
5	01643-31032	WASHER	2	SN:B10001--
6	418-54-31181	PLATE	1	SN:B10001--
7	418-54-31192	PLATE	1	SN:B10001--
8	01010-81025	BOLT	4	SN:B10001--
9	01643-31032	WASHER	4	SN:B10001--
10	418-54-34270	HOLDER	1	SN:B10001--
11	419-54-B4141	DOOR {R.H.}	1	SN:B10260--
	419-54-B4140	DOOR {R.H.}	1	SN:B10001--B10259
12	421-54-31740	・ LOCK ASS'Y (WELDED)	1	SN:B10001--
	418-54-31353	LATCH ASS'Y	1	SN:B10001--
13	418-54-B2520	ROD {R.H.}	1	SN:B10211--
14	01010-81020	BOLT	2	SN:B10001--
15	01643-31032	WASHER	2	SN:B10001--
16	418-54-31181	PLATE	1	SN:B10001--
17	418-54-31192	PLATE	1	SN:B10001--
18	01010-81025	BOLT	4	SN:B10001--
19	01643-31032	WASHER	4	SN:B10001--
20	418-54-34270	HOLDER	1	SN:B10001--
21	418-54-34730	HINGE	1	SN:B10001--
22	418-54-34740	HINGE	1	SN:B10001--
23	418-54-31960	GAS SPRING	4	SN:B10001--
24	418-54-31671	HINGE	1	SN:B10001--
25	418-54-31681	HINGE	1	SN:B10001--
26	01010-81225	BOLT	8	SN:B10001--
27	01643-31232	WASHER	8	SN:B10001--
28	01010-81020	BOLT	16	SN:B10001--
29	01643-31032	WASHER	16	SN:B10001--
30	01640-20816	WASHER	8	SN:B10001--
31	04050-12015	PIN	8	SN:B10001--
32	418-54-21390	WIRE	2	SN:B10001--
33	01010-81230	BOLT	2	SN:B10001--
34	01643-31032	WASHER	2	SN:B10001--

Ref. M4100-03A0 Page 270030

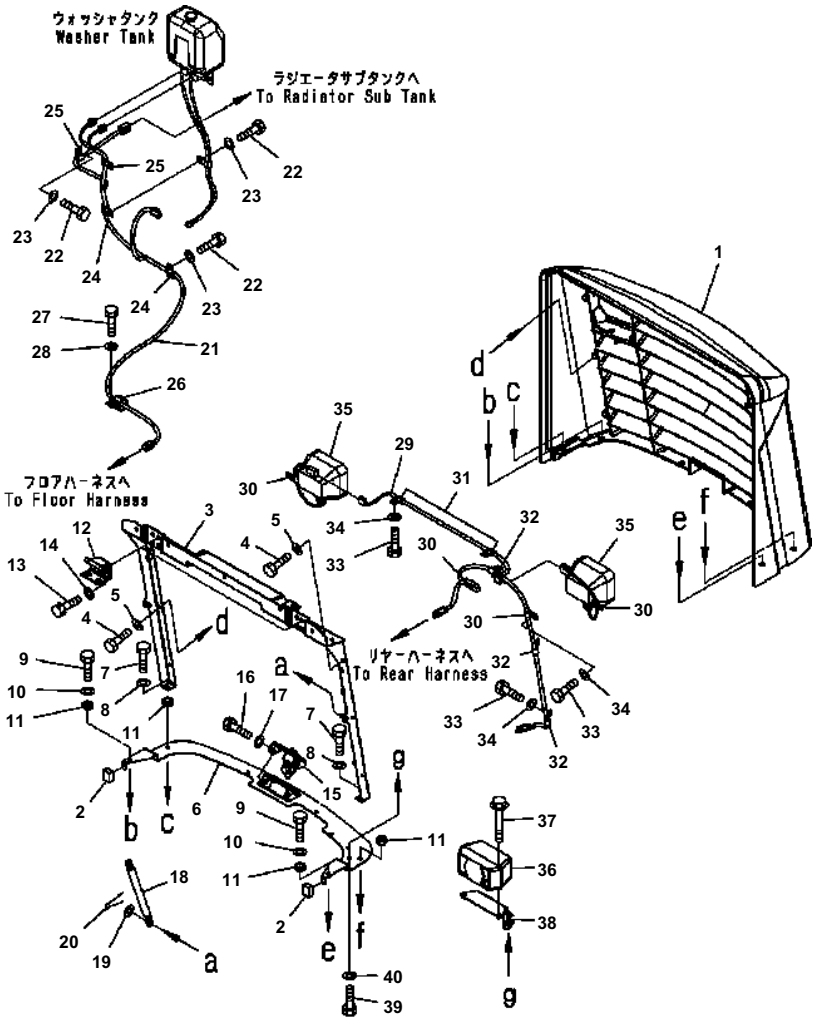

HOOD (RADIATOR GUARD)

Item	Part No.	Description	Qty	Options
1	418-54-31142	GRILLE	1	SN:B10001--
2	418-54-35410	CUSHION	2	SN:B10001--
3	418-54-31155	BRACKET	1	SN:B10001--
4	01010-80820	BOLT	13	SN:B10001--
5	01643-30823	WASHER	13	SN:B10001--
6	418-54-31164	BRACKET	1	SN:B10001--
7	01010-D0820	BOLT	2	SN:B10001--
8	01643-70823	WASHER	2	SN:B10001--
9	01010-D0820	BOLT	4	SN:B10001--
10	418-54-35450	WASHER	4	SN:B10001--
11	418-54-31970	SPACER	6	SN:B10001--
12	418-54-31172	HINGE	2	SN:B10001--
13	01010-81020	BOLT	8	SN:B10001--
14	01643-31032	WASHER	8	SN:B10001--
15	417-54-21562	LOCK ASS'Y	1	SN:B10001--
16	01010-80816	BOLT	2	SN:B10001--
17	01643-30823	WASHER	2	SN:B10001--
18	419-54-31140	GAS SPRING	2	SN:B10001--
19	01640-20816	WASHER	4	SN:B10001--
20	04050-12015	PIN	4	SN:B10001--
21	417-06-32121	WIRING HARNESS	1	SN:B10001--
22	01010-81020	BOLT	4	SN:B10001--
23	01643-31032	WASHER	4	SN:B10001--
24	04434-51412	CLIP	2	SN:B10001--
25	04434-51012	CLIP	2	SN:B10001--
26	04434-53412	CLIP	1	SN:B10001--
27	01010-81020	BOLT	1	SN:B10001--
28	01643-31032	WASHER	1	SN:B10001--
29	418-06-32312	WIRING HARNESS	1	SN:B10001--
30	04434-51010	CLIP	4	SN:B10001--
31	04434-50810	CLIP	2	SN:B10001--
32	417-06-32610	CLIP	3	SN:B10001--
33	01010-80816	BOLT	9	SN:B10001--
34	01643-30823	WASHER	9	SN:B10001--
35	421-06-23350	LAMP ASS'Y	2	SN:B10001--
	421-06-23320	・ LENS	1	SN:B10001--
	421-06-23330	・ BULB¤ 70W	1	SN:B10001--
36	416-06-31410	BUZZER	1	SN:B10246--
	08164-C0000	BUZZER	1	SN:B10001--B10245
37	01435-00895	BOLT	2	SN:B10001--

WA200-5 S/N B10001-UP

HOOD (RADIATOR GUARD)

Item	Part No.	Description	Qty	Options
38	418-54-31980	BRACKET	1	SN:B10001--
39	01010-80820	BOLT	3	SN:B10001--
40	01643-30823	WASHER	3	SN:B10001--

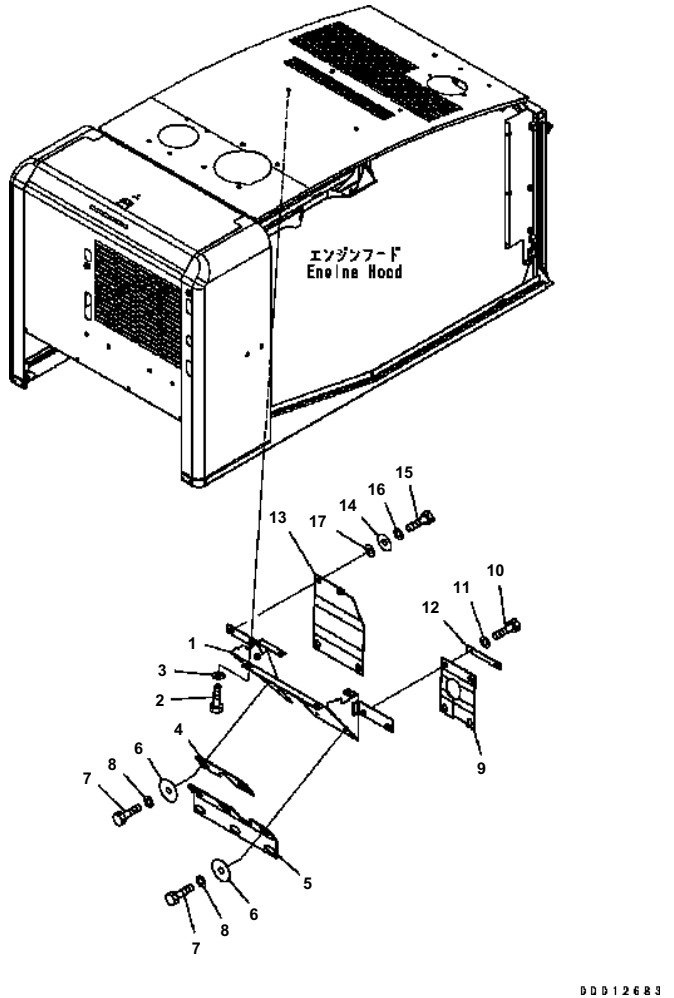

WA200-5 S/N B10001-UP

HOOD (DUCT COVER)

Item	Part No.	Description	Qty	Options
1	417-54-31441	COVER	1	SN:B10001--
2	01010-81016	BOLT	4	SN:B10001--
3	01643-31032	WASHER	4	SN:B10001--
4	418-54-33490	SHEET	1	SN:B10001--
5	418-54-31514	SHEET	1	SN:B10001--
6	418-54-33510	PLATE	5	SN:B10001--
7	01010-80820	BOLT	5	SN:B10001--
8	01643-30823	WASHER	5	SN:B10001--
9	417-54-31430	SHEET	1	SN:B10001--
10	01010-80820	BOLT	2	SN:B10001--
11	01643-30823	WASHER	2	SN:B10001--
12	418-54-31530	PLATE	1	SN:B10001--
13	417-54-31420	SHEET	1	SN:B10001--
14	203-54-56970	WASHER	2	SN:B10001--
15	01010-80820	BOLT	2	SN:B10001--
16	01643-30823	WASHER	2	SN:B10001--
17	01643-50823	WASHER	2	SN:B10001--

Ref. M4100-05A0 Page 270050

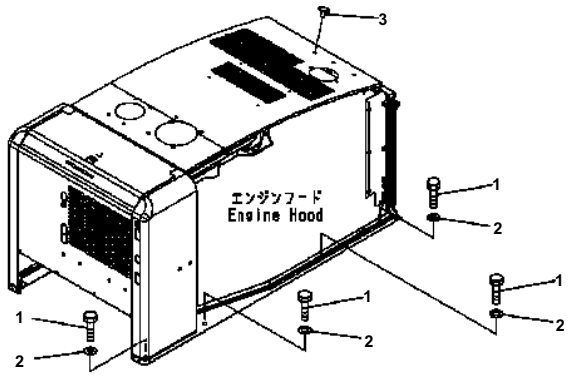

DDD02642

WA200-5 S/N B10001-UP

HOOD MOUNTING

Item	Part No.	Description	Qty	Options
1	01010-81230	BOLT	8	SN:B10001--
2	01643-31232	WASHER	8	SN:B10001--
3	416-54-21710	PLUG	1	SN:B10001--

Ref. M4100-07A0 Page 270060

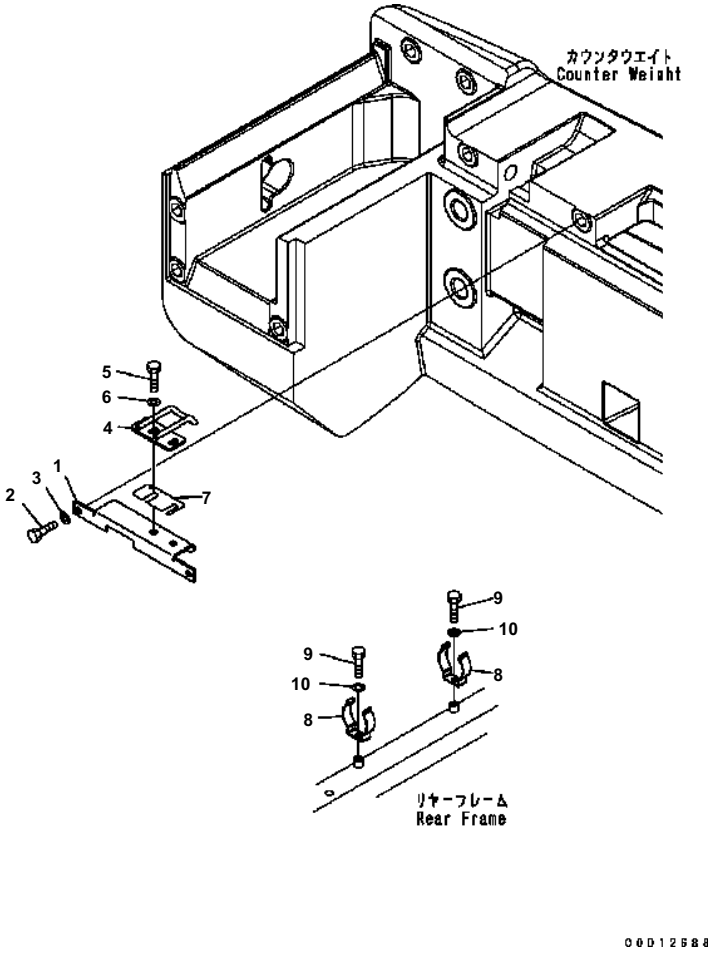

WA200-5 S/N B10001-UP

HOOD (COVER AND STRIKER)

Item	Part No.	Description	Qty	Options
1	418-54-31253	BRACKET	1	SN:B10001--
2	01010-81020	BOLT	2	SN:B10001--
3	01643-31032	WASHER	2	SN:B10001--
4	418-54-31264	STRIKER	1	SN:B10001--
5	01010-81020	BOLT	2	SN:B10001--
6	01643-31032	WASHER	2	SN:B10001--
7	418-54-34151	SHIM	3	SN:B10001--
8	417-54-21460	SPRING	2	SN:B10001--
9	01010-80816	BOLT	2	SN:B10001--
10	01643-30823	WASHER	2	SN:B10001--

Ref. M4100-08A0 Page 270070

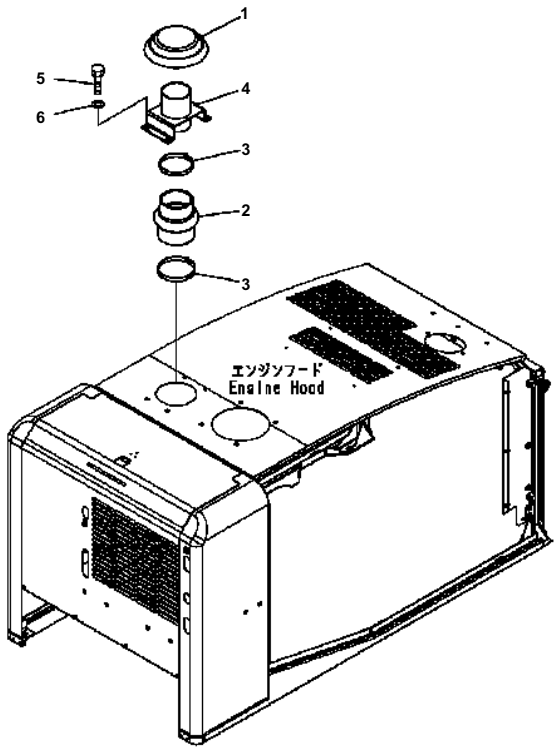

WA200-5 S/N B10001-UP

HOOD (CAP)

Item	Part No.	Description	Qty	Options
1	600-181-3850	CAP	1	SN:B10001--
2	418-54-31330	HOSE	1	SN:B10001--
3	07289-00120	CLAMP	2	SN:B10001--
4	418-54-31340	BRACKET	1	SN:B10001--
5	01010-81020	BOLT	4	SN:B10001--
6	01643-31032	WASHER	4	SN:B10001--

Ref. M4100-09A0 Page 270080

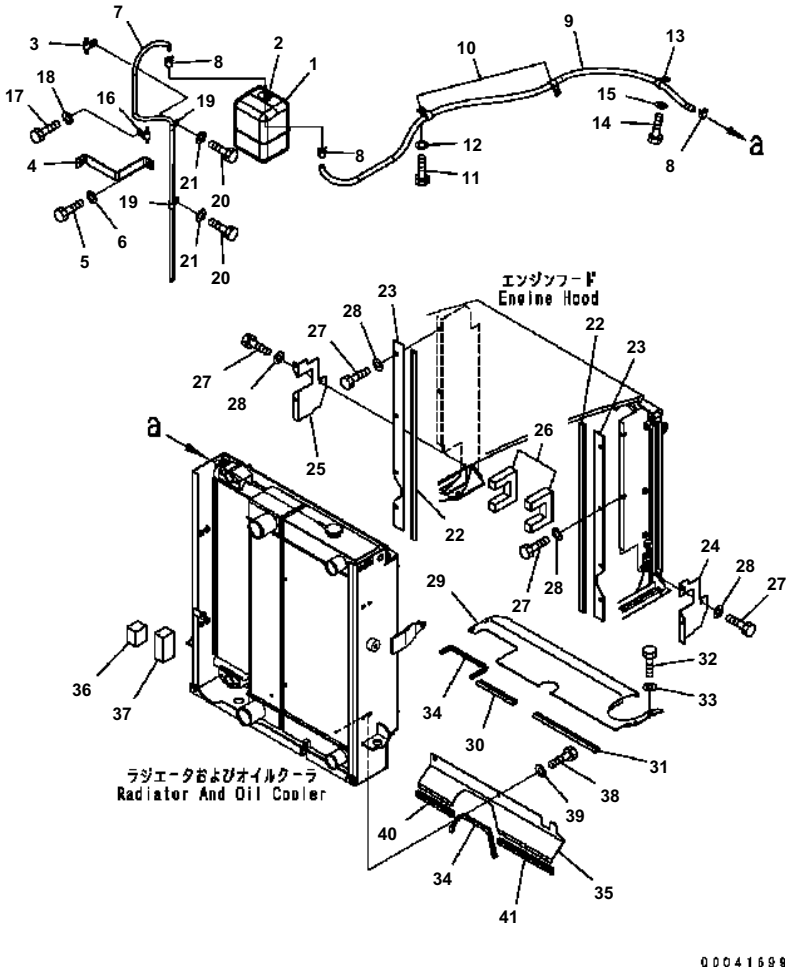

WA200-5 S/N B10001-UP

HOOD (RADIATOR PIPING AND BUFFLE PLATE)

Item	Part No.	Description	Qty	Options
1	20Y-06-15240	TANK ASS'Y	1	SN:B10001--
2	205-03-71532	・ CAP	1	SN:B10001--
	205-03-71540	・・ PACKING	1	SN:B10001--
3	04434-50812	CLIP	1	SN:B10001--
4	418-03-31360	PLATE	1	SN:B10001--
5	01010-81020	BOLT	2	SN:B10001--
6	01643-31032	WASHER	2	SN:B10001--
7	07287-00812	HOSE	1	SN:B10001--
8	07285-00115	CLIP	3	SN:B10001--
9	418-03-31391	HOSE	1	SN:B10001--
10	04434-51710	CLIP	2	SN:B10001--
11	01010-80816	BOLT	2	SN:B10001--
12	01643-30823	WASHER	2	SN:B10001--
13	04434-51210	CLIP	1	SN:B10001--
14	01010-80816	BOLT	1	SN:B10001--
15	01643-30823	WASHER	1	SN:B10001--
16	04434-50812	CLIP	1	SN:B10001--
17	01010-81020	BOLT	1	SN:B10001--
18	01643-31032	WASHER	1	SN:B10001--
19	04434-51810	CLIP	2	SN:B10001--
20	01010-81020	BOLT	2	SN:B10001--
21	01643-31032	WASHER	2	SN:B10001--
22	418-54-21710	SEAL	2	SN:B10001--
23	418-54-B1910	PLATE	2	SN:B10135--
	418-54-31912	PLATE	2	SN:B10001--B10134
24	418-54-B2450	COVER {L.H.}	1	SN:B10178--
	418-54-32451	COVER {L.H.}	1	SN:B10001--B10177
25	418-54-B2470	COVER {R.H.}	1	SN:B10178--
	418-54-32471	COVER {R.H.}	1	SN:B10001--B10177
26	418-54-35331	SHEET	2	SN:B10001--
27	01010-80816	BOLT	10	SN:B10001--
28	01643-30823	WASHER	10	SN:B10001--
29	418-54-31394	PLATE	1	SN:B10001--
30	22T-56-12991	SEAL	1	SN:B10001--
31	23S-54-27790	SEAL	1	SN:B10001--
32	01010-81020	BOLT	4	SN:B10001--
33	01643-31032	WASHER	4	SN:B10001--
34	418-54-33240	FINISHER	2	SN:B10001--
35	417-54-35211	PLATE	1	SN:B10001--
36	418-54-35170	SHEET	1	SN:B10001--

Ref. M4100-10A0A Page 270090

WA200-5 S/N B10001-UP

HOOD (RADIATOR PIPING AND BUFFLE PLATE)

Item	Part No.	Description	Qty	Options
37	418-54-35180	SHEET	1	SN:B10001--
38	01010-81020	BOLT	2	SN:B10001--
39	01643-31032	WASHER	2	SN:B10001--
40	22T-56-12991	SEAL	1	SN:B10001--
41	415-54-31180	SEAL	1	SN:B10001--

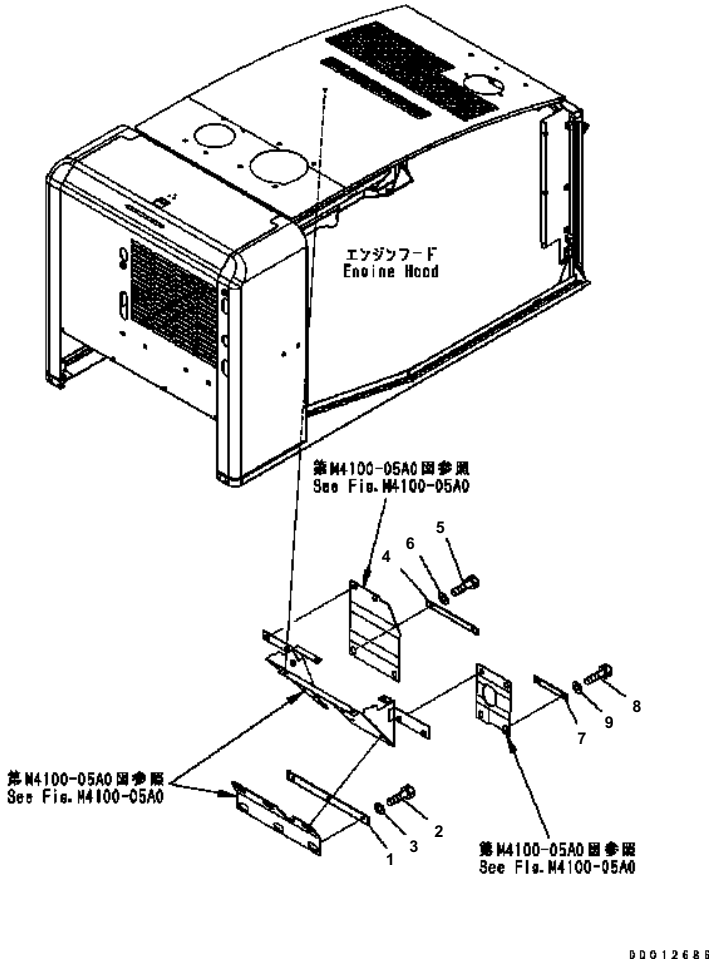

WA200-5 S/N B10001-UP

HOOD (DUCT SHEET)

Item	Part No.	Description	Qty	Options
1	418-54-31523	PLATE	1	SN:B10001--
2	01010-80820	BOLT	3	SN:B10001--
3	01643-30823	WASHER	3	SN:B10001--
4	418-54-33470	PLATE	1	SN:B10001--
5	01010-80820	BOLT	2	SN:B10001--
6	01643-30823	WASHER	2	SN:B10001--
7	418-54-31530	PLATE	1	SN:B10001--
8	01010-80820	BOLT	2	SN:B10001--
9	01643-30823	WASHER	2	SN:B10001--

Ref. M4100-11A0 Page 270100

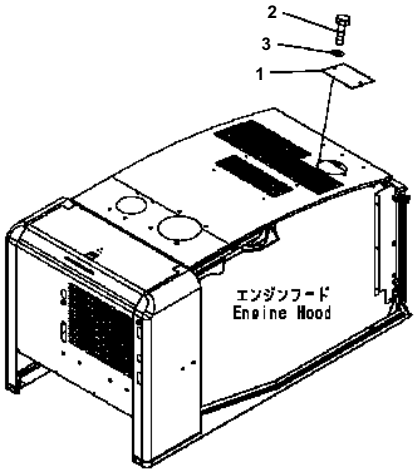

00002547

WA200-5 S/N B10001-UP

HOOD (COVER) (FOR TANK AND MAINTENANCE COVER LOCK)

Item	Part No.	Description	Qty	Options
1	416-Z91-2110	PLATE	1	SN:B10001--
2	01010-80816	BOLT	2	SN:B10001--
3	01643-30823	WASHER	2	SN:B10001--

Ref. M4100-13B2 Page 270110

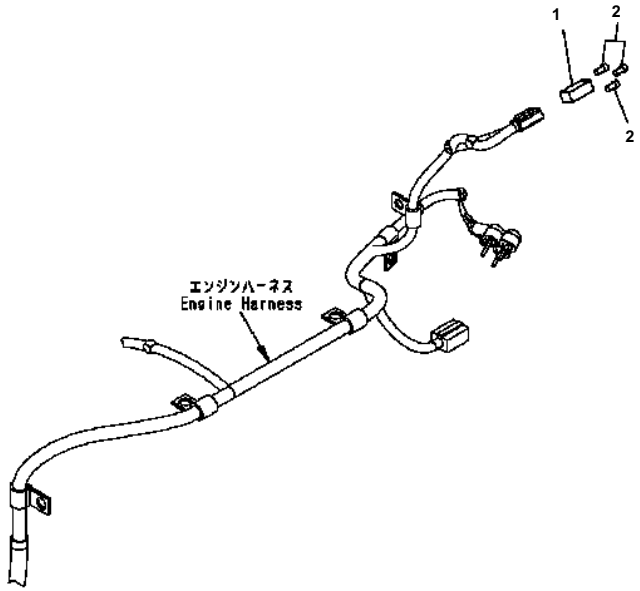

WA200-5 S/N B10001-UP

HOOD (AIR CONDITIONER PLUG)

Item	Part No.	Description	Qty	Options
1	08192-23100	CONNECTOR	1	SN:B10001--
2	08191-00770	PLUG	3	SN:B10001--

Ref. M4100-14B0 Page 270120

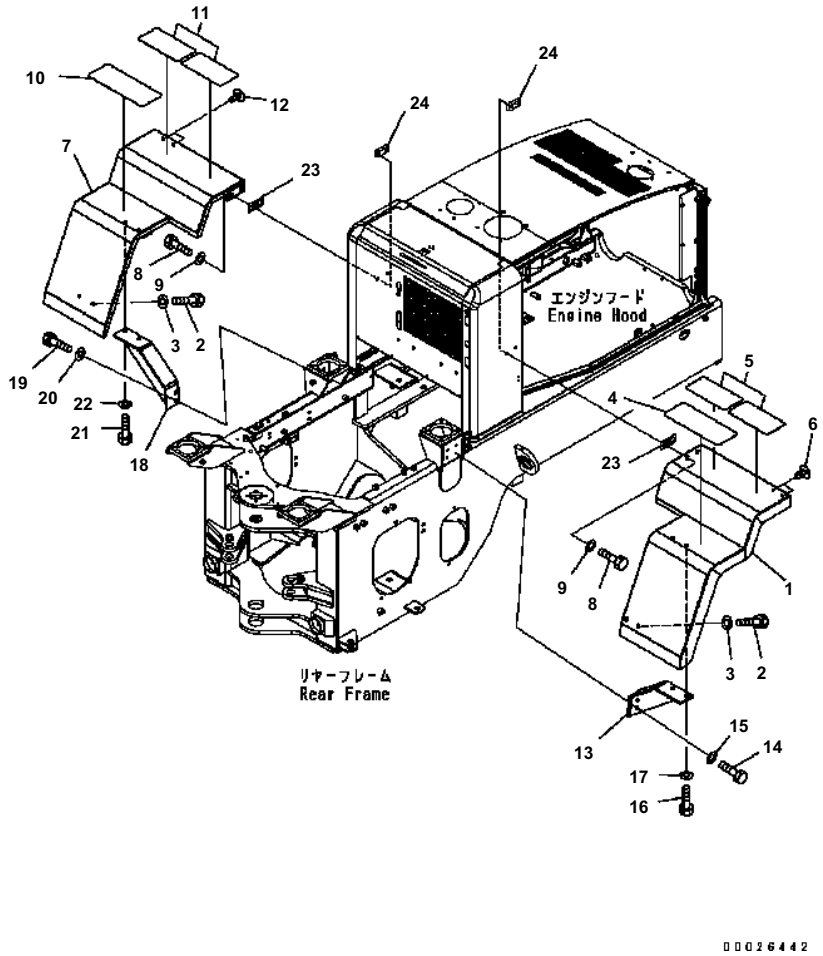

WA200-5 S/N B10001-UP

REAR FENDER

Item	Part No.	Description	Qty	Options
1	417-54-31212	FENDER {L.H.}	1	SN:B10001--
2	01010-81225	BOLT	4	SN:B10001--
3	01643-31232	WASHER	4	SN:B10001--
4	154-54-23260	SEAT	1	SN:B10001--
5	22B-00-11210	SHEET	2	SN:B10001--
6	421-54-21850	PLUG	2	SN:B10001--
7	417-54-31222	FENDER {R.H.}	1	SN:B10001--
8	01010-81225	BOLT	4	SN:B10001--
9	01643-31232	WASHER	4	SN:B10001--
10	154-54-23260	SEAT	1	SN:B10001--
11	22B-00-11210	SHEET	2	SN:B10001--
12	421-54-21850	PLUG	2	SN:B10001--
13	418-54-31231	BRACKET {L.H.}	1	SN:B10161--
	418-54-31230	BRACKET {L.H.}	1	SN:B10001--B10160
14	01010-81225	BOLT	2	SN:B10001--
15	01643-31232	WASHER	4	SN:B10001--
16	01010-81230	BOLT	2	SN:B10001--
17	01643-31232	WASHER	2	SN:B10001--
18	418-54-31241	BRACKET {R.H.}	1	SN:B10161--
	418-54-31240	BRACKET {R.H.}	1	SN:B10001--B10160
19	01010-81230	BOLT	4	SN:B10161--
	01010-81225	BOLT	4	SN:B10001--B10160
20	01643-31232	WASHER	4	SN:B10161--
	01643-31232	WASHER	4	SN:B10001--B10160
21	01010-81230	BOLT	4	SN:B10001--
22	01643-31232	WASHER	4	SN:B10001--
23	419-54-B4110	SHIM	4	SN:B10017--
24	418-54-33570	SEAT	2	SN:B10161--

Ref. M4200-01A0 Page 270130

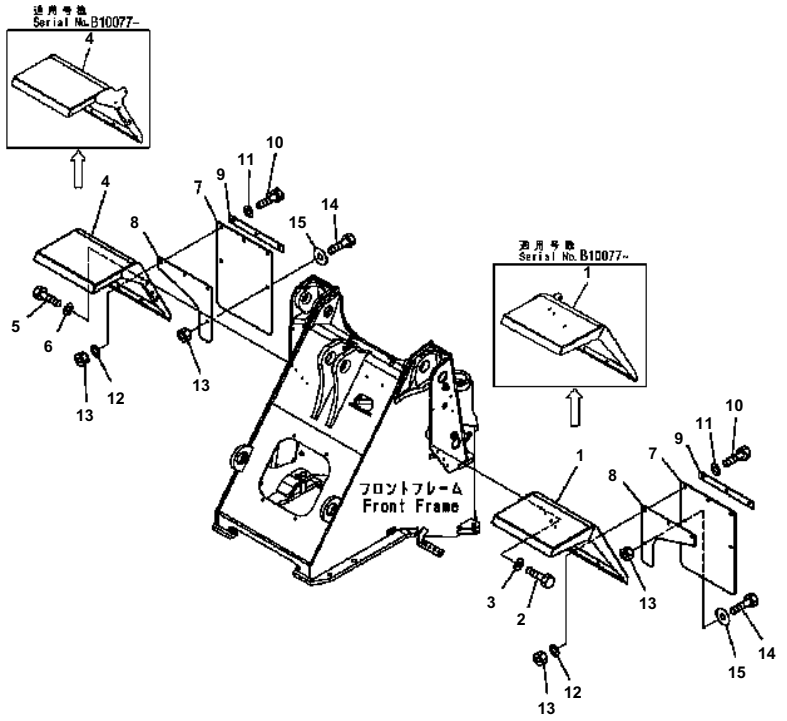

WA200-5 S/N B10001-UP

FRONT FENDER (FULL FENDER)

Item	Part No.	Description	Qty	Options
1	417-54-34132	FENDER {L.H.}	1	SN:B10077--
	417-54-34131	FENDER {L.H.}	1	SN:B10001--B10076
2	01010-81025	BOLT	4	SN:B10001--
3	01643-31032	WASHER	4	SN:B10001--
4	417-54-34142	FENDER {R.H.}	1	SN:B10077--
	417-54-34141	FENDER {R.H.}	1	SN:B10001--B10076
5	01010-81025	BOLT	4	SN:B10001--
6	01643-31032	WASHER	4	SN:B10001--
7	418-54-34660	SHEET	2	SN:B10001--
8	418-54-34670	PLATE	2	SN:B10001--
9	418-54-24570	PLATE	2	SN:B10001--
10	01010-81230	BOLT	6	SN:B10001--
11	01643-31232	WASHER	6	SN:B10001--
12	01643-31232	WASHER	6	SN:B10001--
13	01580-11210	NUT	8	SN:B10211--
	01580-01210	NUT	8	SN:B10001--B10210
14	01010-81225	BOLT	2	SN:B10001--
15	416-03-11210	WASHER	2	SN:B10001--

Ref. M4210-01A1 Page 270140

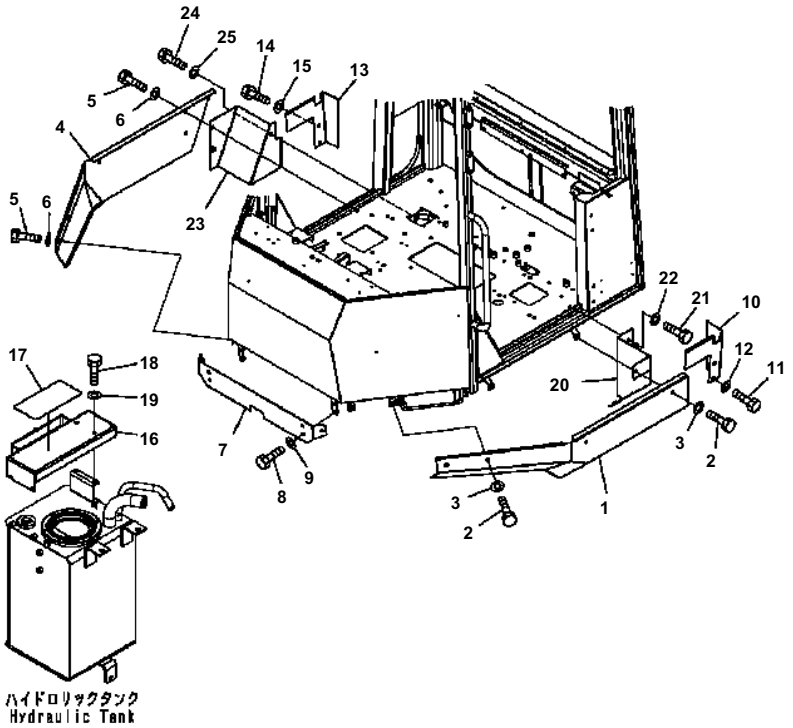

WA200-5 S/N B10001-UP

FLOOR COVER

Item	Part No.	Description	Qty	Options
1	418-54-34324	COVER {L.H.}	1	SN:B10001--
2	01010-81030	BOLT	5	SN:B10001--
3	01643-31032	WASHER	5	SN:B10001--
4	418-54-34335	COVER {R.H.}	1	SN:B10001--
5	01010-81030	BOLT	5	SN:B10001--
6	01643-31032	WASHER	5	SN:B10001--
7	418-54-34314	COVER	1	SN:B10001--
8	01010-81030	BOLT	4	SN:B10001--
9	01643-31032	WASHER	4	SN:B10001--
10	418-54-34354	PLATE {L.H.}	1	SN:B10001--
11	01010-81030	BOLT	2	SN:B10001--
12	01643-31032	WASHER	2	SN:B10001--
13	418-54-34364	PLATE {R.H.}	1	SN:B10001--
14	01010-81030	BOLT	2	SN:B10001--
15	01643-31032	WASHER	2	SN:B10001--
16	417-54-34370	COVER	1	SN:B10001--
17	417-06-11321	PLATE	1	SN:B10001--
18	01010-81020	BOLT	4	SN:B10001--
19	01643-31032	WASHER	4	SN:B10001--
20	418-54-34412	COVER	1	SN:B10001--
21	01010-81030	BOLT	1	SN:B10001--
22	01643-31032	WASHER	1	SN:B10001--
23	418-54-34423	COVER	1	SN:B10001--
24	01010-81030	BOLT	1	SN:B10001--
25	01643-31032	WASHER	1	SN:B10001--

Ref. M4230-01A0 Page 270150

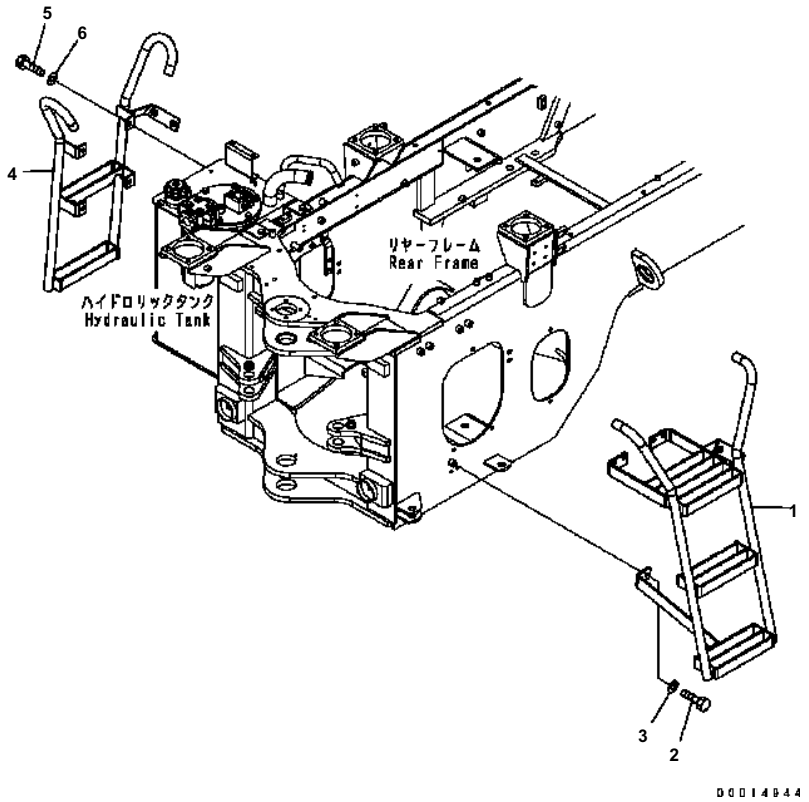

WA200-5 S/N B10001-UP

LADDER

Item	Part No.	Description	Qty	Options
1	418-54-35510	LADDER {L.H.}	1	SN:B10001--
2	01010-81225	BOLT	5	SN:B10001--
3	01643-31232	WASHER	5	SN:B10001--
4	418-54-35520	LADDER {R.H.}	1	SN:B10001--
5	01010-81225	BOLT	4	SN:B10001--
6	01643-31232	WASHER	4	SN:B10001--

Ref. M4310-01A0 Page 270160

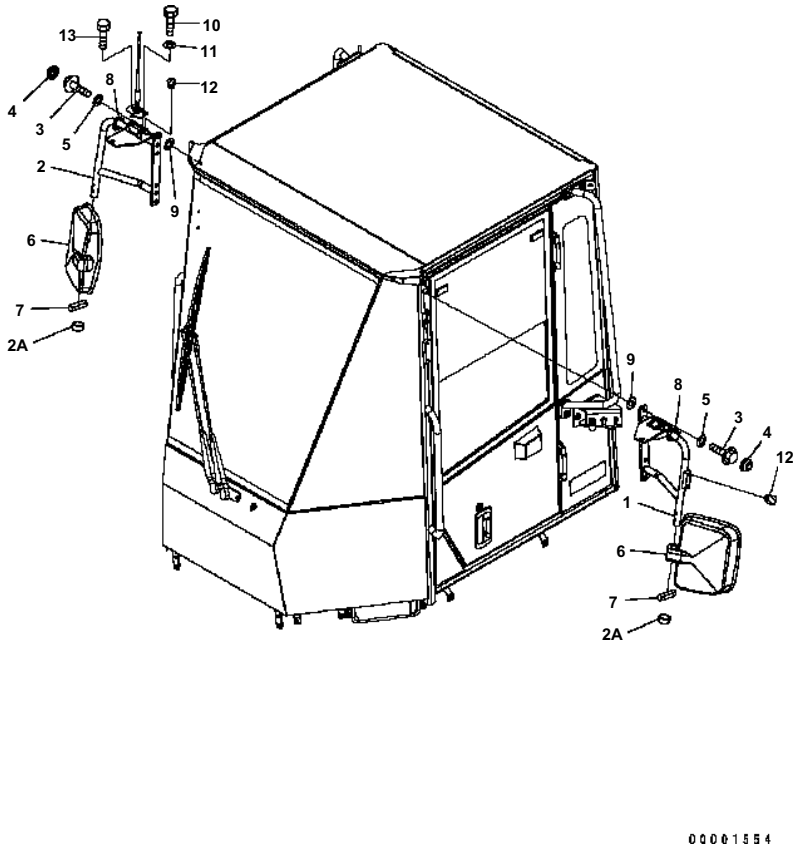

WA200-5 S/N B10001-UP

MIRROR

Item	Part No.	Description	Qty	Options
1	418-54-34851	STAY	1	SN:B10001--
2	418-54-34862	STAY	1	SN:B10001--
2A	22M-54-26180	CAP	2	SN:B10001--
3	01435-01025	BOLT	8	SN:B10001--
4	363-54-31450	CAP	8	SN:B10001--
5	01643-31032	WASHER	8	SN:B10001--
6	421-54-25610	MIRROR	2	SN:B10001--
	421-54-25620	· BUSHING	2	SN:B10001--
	421-54-25630	· HOLDER	1	SN:B10001--
	421-54-25640	· LENS	1	SN:B10001--
	421-54-25650	· FRAME	1	SN:B10001--
	421-54-25660	· SCREW	4	SN:B10001--
7	04025-00632	PIN	2	SN:B10001--
8	08034-40521	BAND	2	SN:B10001--
9	01640-21016	WASHER	8	SN:B10001--
10	01010-80616	BOLT	2	SN:B10001--
11	01643-30623	WASHER	2	SN:B10001--
12	07049-01012	PLUG	4	SN:B10236--
13	01023-70416	SCREW	2	SN:B10001--

Ref. M4410-01A2 Page 270170

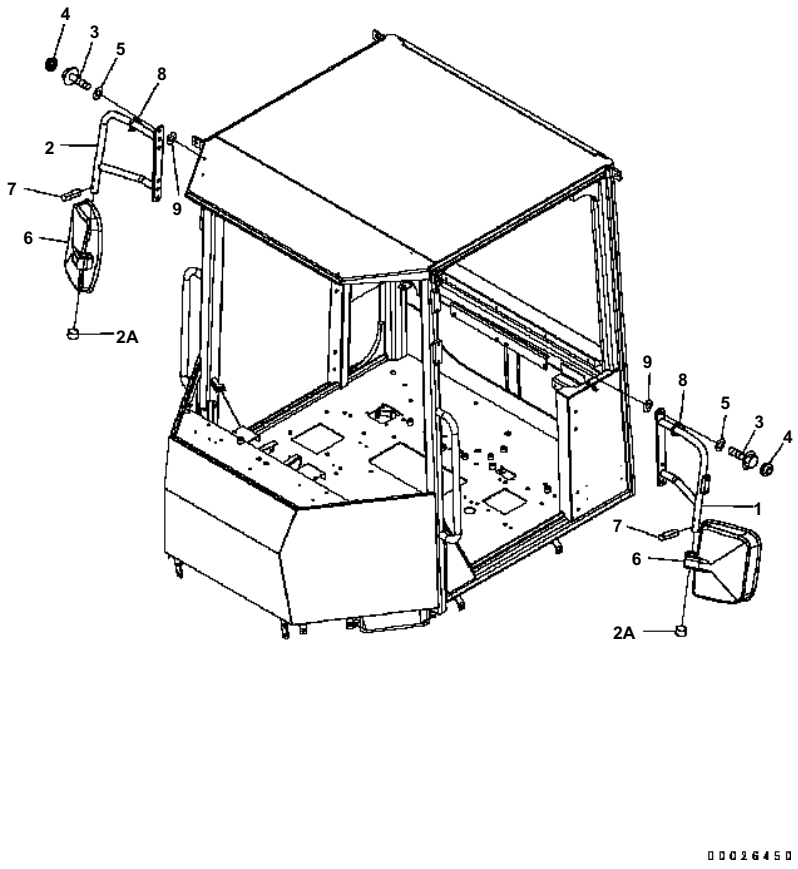

WA200-5 S/N B10001-UP

MIRROR (FOR CANOPY)

Item	Part No.	Description	Qty	Options
1	418-54-35460	STAY {L.H.}	1	SN:B10001--
2	418-54-35470	STAY {R.H.}	1	SN:B10001--
2A	22M-54-26180	CAP	2	SN:B10001--
3	01435-01025	BOLT	8	SN:B10001--
4	363-54-31450	CAP	8	SN:B10001--
5	01643-31032	WASHER	8	SN:B10001--
6	421-54-25610	MIRROR	2	SN:B10001--
	421-54-25620	· BUSHING	2	SN:B10001--
	421-54-25630	· HOLDER	1	SN:B10001--
	421-54-25640	· LENS	1	SN:B10001--
	421-54-25650	· FRAME	1	SN:B10001--
	421-54-25660	· SCREW	4	SN:B10001--
7	04025-00632	PIN	2	SN:B10001--
8	08034-40521	BAND	2	SN:B10001--
9	01640-21016	WASHER	8	SN:B10001--

Ref. M4410-01A3 Page 270180

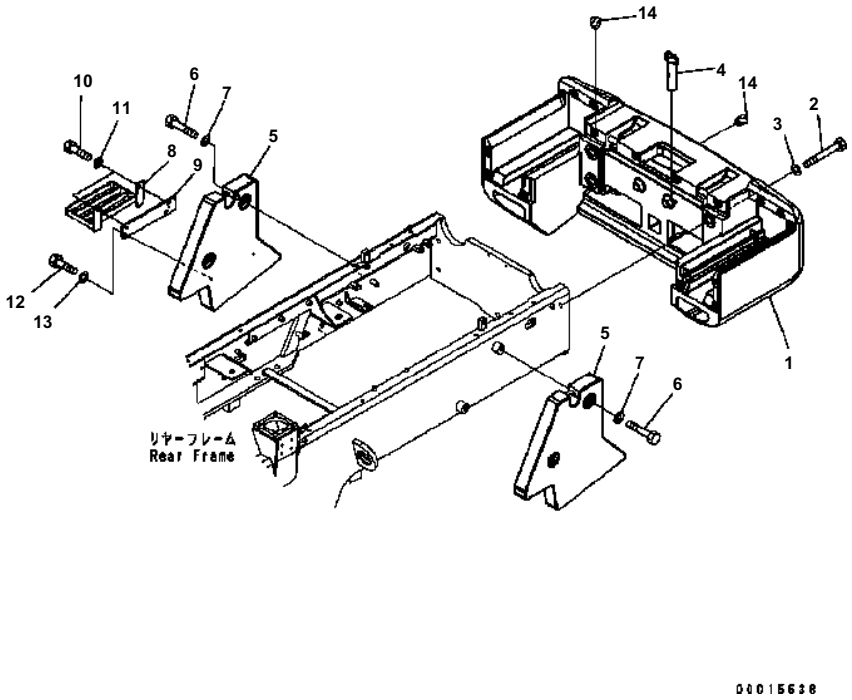

WA200-5 S/N B10001-UP

COUNTER WEIGHT (ADDITIONAL WEIGHT)

Item	Part No.	Description	Qty	Options
1	417-46-35210	COUNTER WEIGHT	1	SN:B10001--
2	01011-62480	BOLT	4	SN:B10001--
3	01643-32460	WASHER	4	SN:B10001--
4	418-46-35140	PIN	1	SN:B10001--
5	418-975-3114	COUNTER WEIGHT	2	SN:B10001--
6	01010-82065	BOLT	4	SN:B10001--
7	01643-32060	WASHER	4	SN:B10001--
8	418-04-31181	STEP	1	SN:B10001--
9	417-975-3270	BRACKET	1	SN:B10001--
10	01010-81225	BOLT	2	SN:B10001--
11	01643-31232	WASHER	2	SN:B10001--
12	01010-81235	BOLT	2	SN:B10001--
13	01643-31232	WASHER	2	SN:B10001--
14	07049-01012	PLUG	4	SN:B10236--

Ref. M4510-01A3 Page 270190

SUSPENSION AND WHEEL RELATED PARTS

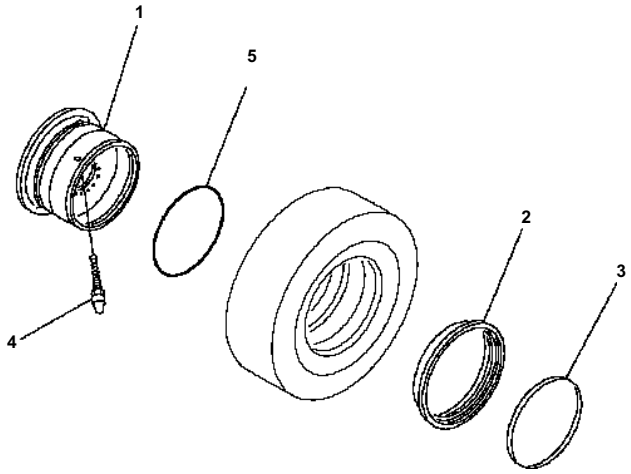

WA200-5 S/N B10001-UP

RIM (FOR 14.0-25 TUBELESS TIRE)

Item	Part No.	Description	Qty	Options
	417-30-B1141	WHEEL ASS'Y	4	SN:B10001--
1	417-30-B1151	· BASE	1	SN:B10001--
2	417-30-B1161	· FLANGE	1	SN:B10001--
3	417-30-B1170	· RING	1	SN:B10001--
4	417-30-B1180	· VALVE	1	SN:B10001--
5	417-30-B1190	· O-RING	1	SN:B10001--

Ref. S0110-01A2 Page 300010

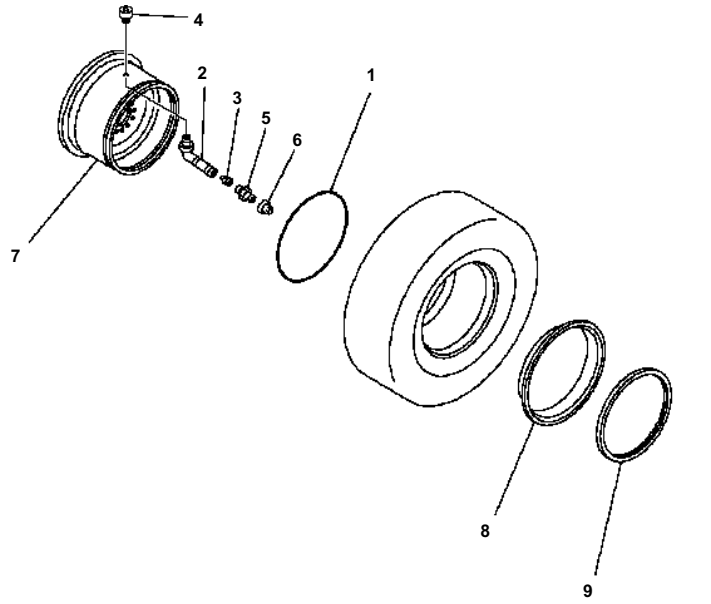

WA200-5 S/N B10001-UP

RIM (FOR 17.5-25 TUBELESS TIRE)

Item	Part No.	Description	Qty	Options
	419-30-B1200	WHEEL ASS'Y	4	SN:B10001--
1	419-30-11630	・ O-RING	1	SN:B10001--
	09280-10040	・ VALVE	1	SN:B10001--
2	09280-10130	・・ STEM	1	SN:B10001--
3	09281-00041	・・ CORE	1	SN:B10001--
4	09283-00000	・・ SEAT	1	SN:B10001--
5	09285-00000	・・ ADAPTER	1	SN:B10001--
6	09282-00017	・・ CAP	1	SN:B10001--
	418-30-31211	・ RIM ASS'Y	1	SN:B10001--
7	418-30-31231	・・ BASE	1	SN:B10001--
8	418-30-31240	・・ FLANGE	1	SN:B10001--
9	418-30-31250	・・ RING	1	SN:B10001--

Ref. S0110-01A3 Page 300020

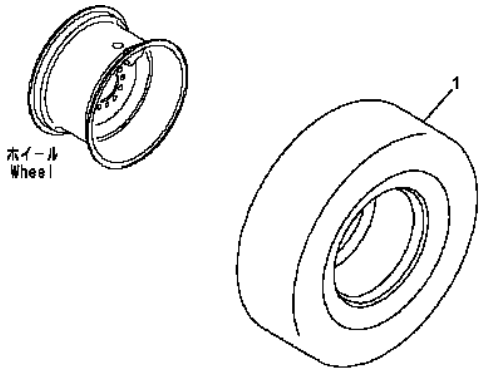

WA200-5 S/N B10001-UP

TIRE (17.25-12PR-L2, TUBELESS TIRE)

Item	Part No.	Description	Qty	Options
1	419-X13-1100	TIRE ASS'Y	4	SN:B10001--

Ref. S0120-01A0 Page 300030

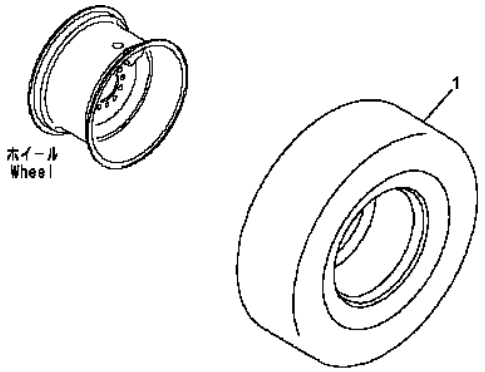

WA200-5 S/N B10001-UP

TIRE (17.5-25-12L3, TUBELESS TIRE)

Item	Part No.	Description	Qty	Options
1	417-30-B1220	TIRE ASS'Y	4	SN:B10001--

Ref. S0120-01A1 Page 300040

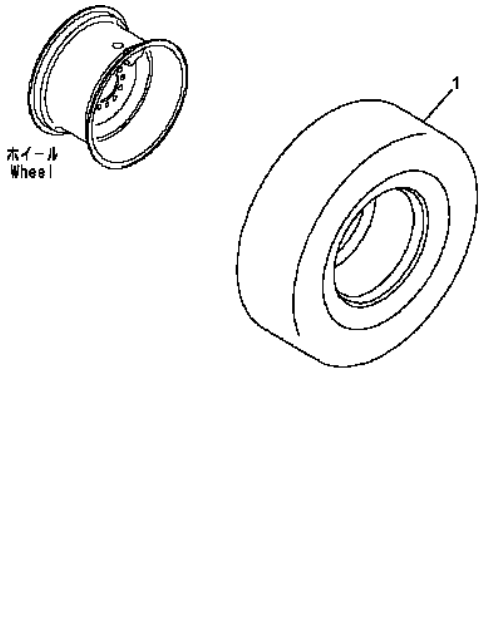

WA200-5 S/N B10001-UP

TIRE (17.5-25-16PR-L3, TUBELESS TIRE)

Item	Part No.	Description	Qty	Options
1	417-30-B1120	TIRE ASS'Y	4	SN:B10001--

Ref. S0120-01A2 Page 300050

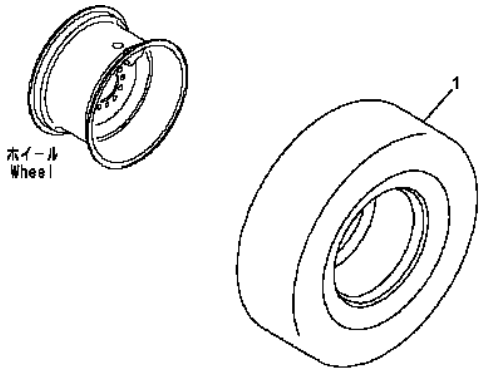

WA200-5 S/N B10001-UP

TIRE (20.5-25-12PR-L3, TUBELESS TIRE)

Item	Part No.	Description	Qty	Options
1	419-X17-1110	TIRE ASS'Y	4	SN:B10001--

Ref. S0120-01A3 Page 300060

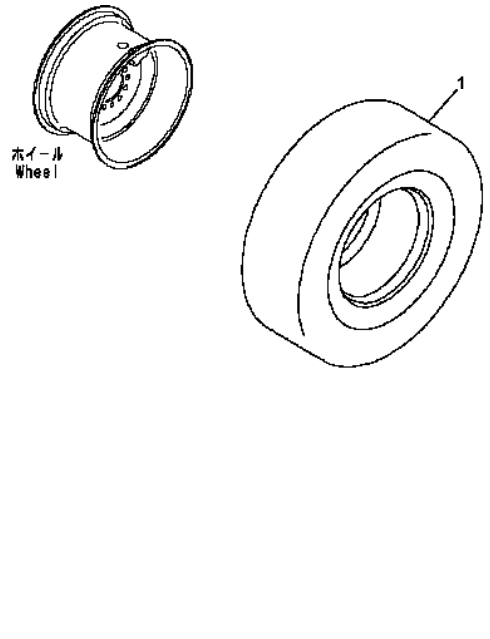

WA200-5 S/N B10001-UP

TIRE (20.5-25-16PR-L3, TUBELESS TIRE)

Item	Part No.	Description	Qty	Options
1	423-X19-1130	TIRE ASS'Y	4	SN:B10001--

Ref. S0120-01A4 Page 300070

WORK EQUIPMENT

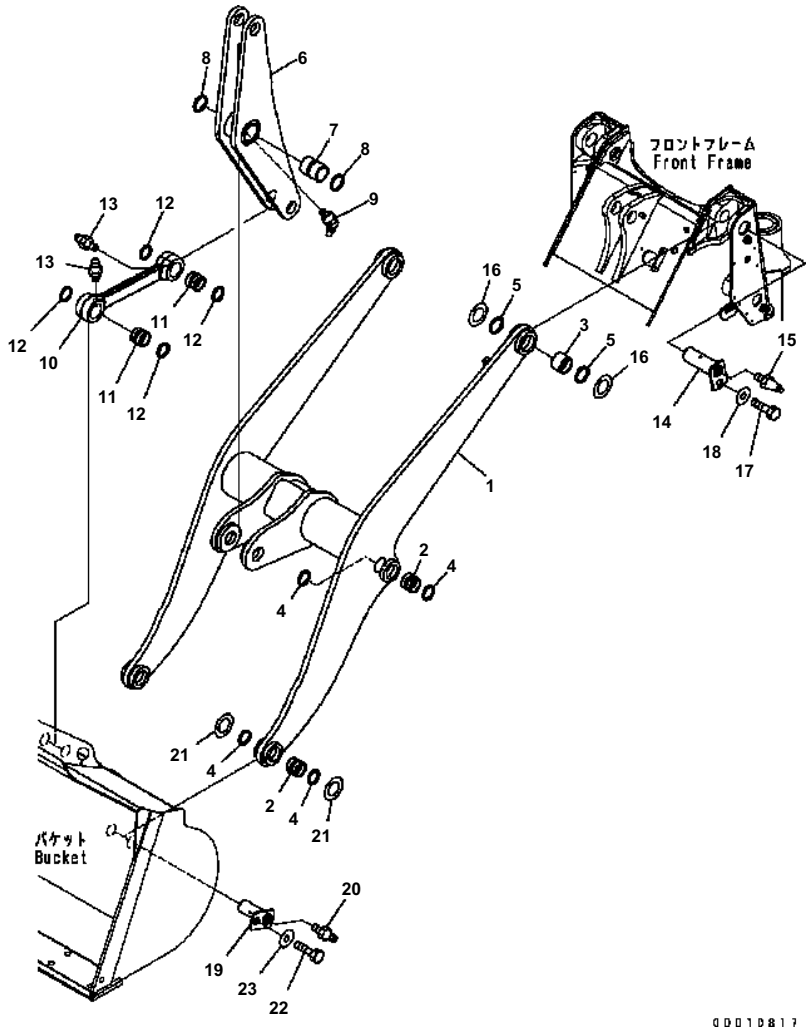

WA200-5 S/N B10001-UP

LIFT ARM AND BELLCRANK (#B10001-B10134)

Item	Part No.	Description	Qty	Options
1	417-70-31101	BOOM ASS'Y	1	SN:B10001--B10134
2	417-70-11860	· BUSHING	4	SN:B10001--B10134
3	419-70-11871	· BUSHING	2	SN:B10001--B10134
4	417-09-11120	· SEAL {DUST}	8	SN:B10001--B10134
5	419-09-11110	· SEAL {DUST}	4	SN:B10001--B10134
	417-70-31201	BELLCRANK ASS'Y	1	SN:B10001--B10134
6	☆	· BELLCRANK ASS'Y	1	SN:B10001--B10134
7	417-70-31820	· BUSHING	1	SN:B10001--B10134
8	419-09-11110	· SEAL {DUST}	2	SN:B10001--B10134
9	07020-00675	· FITTING {GREASE}	1	SN:B10001--B10134
	417-70-31300	LINK ASS'Y	1	SN:B10001--B10134
10	☆	· LINK	1	SN:B10001--B10134
11	417-70-11860	· BUSHING	2	SN:B10001--B10134
12	417-09-11120	· SEAL {DUST}	4	SN:B10001--B10134
13	07020-00000	· FITTING	2	SN:B10001--B10134
14	417-70-31710	PIN	2	SN:B10001--B10134
15	07020-00675	FITTING {GREASE}	2	SN:B10001--B10134
16	419-70-11440	SHIM¤ 1.5MM	2	SN:B10001--B10134
	419-70-11450	SHIM¤ 3.0MM	2	SN:B10001--B10134
17	01010-81625	BOLT	2	SN:B10001--B10134
18	421-70-11280	WASHER	2	SN:B10001--B10134
19	418-70-11910	PIN	2	SN:B10001--B10134
20	07020-00000	FITTING {GREASE}	2	SN:B10001--B10134
21	417-70-11340	SHIM¤ 1.5MM	4	SN:B10001--B10134
22	01010-81625	BOLT	2	SN:B10001--B10134
23	421-70-11280	WASHER	2	SN:B10001--B10134

Ref. T4110-01A0 Page 330010

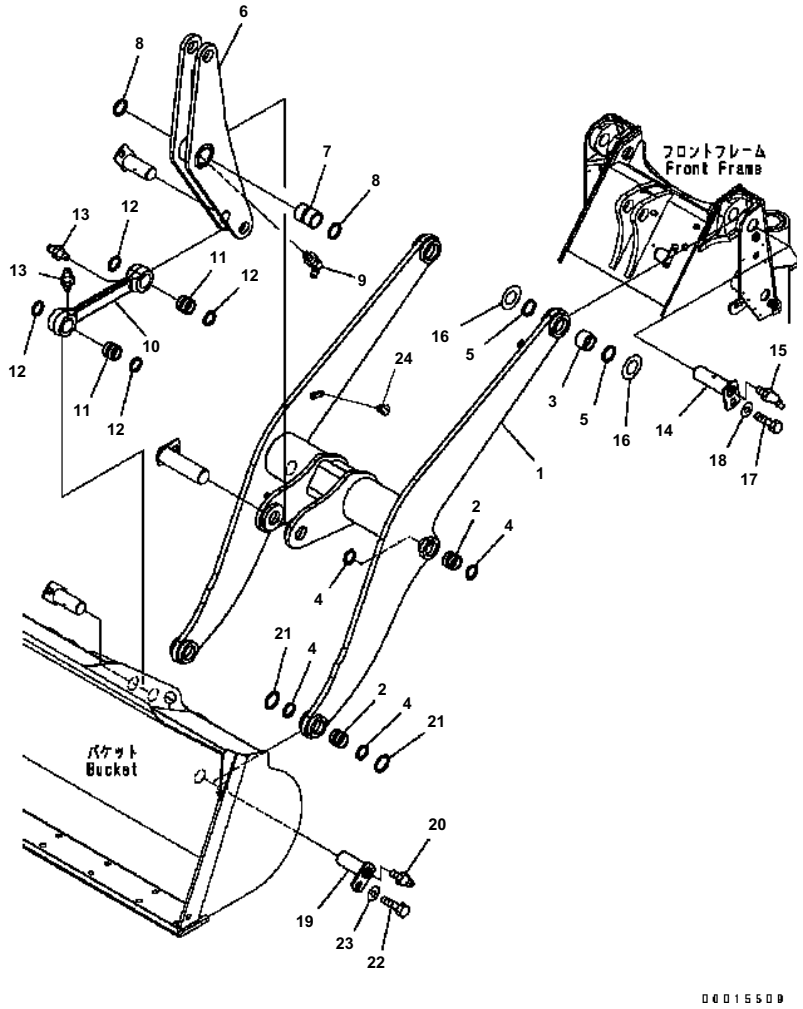

WA200-5 S/N B10001-UP

LIFT ARM AND BELLCRANK (FOR 3-SPOOL VALVE)

Item	Part No.	Description	Qty	Options
	417-70-B3220	BOOM ASS'Y	1	SN:B10228--
	417-70-31400	BOOM ASS'Y	1	SN:B10001--B10227
1	☆	· BOOM ASS'Y	1	SN:B10001--
2	417-70-11860	· BUSHING	4	SN:B10001--
3	419-70-11871	· BUSHING	2	SN:B10001--
4	417-09-11120	· SEAL {DUST}	8	SN:B10001--
5	419-09-11110	· SEAL {DUST}	4	SN:B10001--
	417-70-31201	BELLCRANK ASS'Y	1	SN:B10001--
6	☆	· BELLCRANK ASS'Y	1	SN:B10001--
7	417-70-31820	· BUSHING	1	SN:B10001--
8	419-09-11110	· SEAL {DUST}	2	SN:B10001--
9	07020-00675	· FITTING {GREASE}	1	SN:B10001--
	417-70-31300	LINK ASS'Y	1	SN:B10001--
10	☆	· LINK	1	SN:B10001--
11	417-70-11860	· BUSHING	2	SN:B10001--
12	417-09-11120	· SEAL{DUST}	4	SN:B10001--
13	07020-00000	· FITTING	2	SN:B10001--
14	417-70-31710	PIN	2	SN:B10001--
15	07020-00675	FITTING {GREASE}	2	SN:B10001--
16	419-70-11440	SHIM¤ 1.5MM{1.5MM}	2	SN:B10001--
	419-70-11450	SHIM¤ 3.0MM{3.0MM}	2	SN:B10001--
17	01010-81625	BOLT	2	SN:B10001--
18	421-70-11280	WASHER	2	SN:B10001--
19	418-70-11910	PIN	2	SN:B10001--
20	07020-00000	FITTING{GREASE}	2	SN:B10001--
21	417-70-11340	SHIM¤ 1.5MM{1.5MM}	4	SN:B10001--
22	01010-81625	BOLT	2	SN:B10001--
23	421-70-11280	WASHER	2	SN:B10001--
24	07049-01012	PLUG	8	SN:B10236--

Ref. T4110-01A1 Page 330020

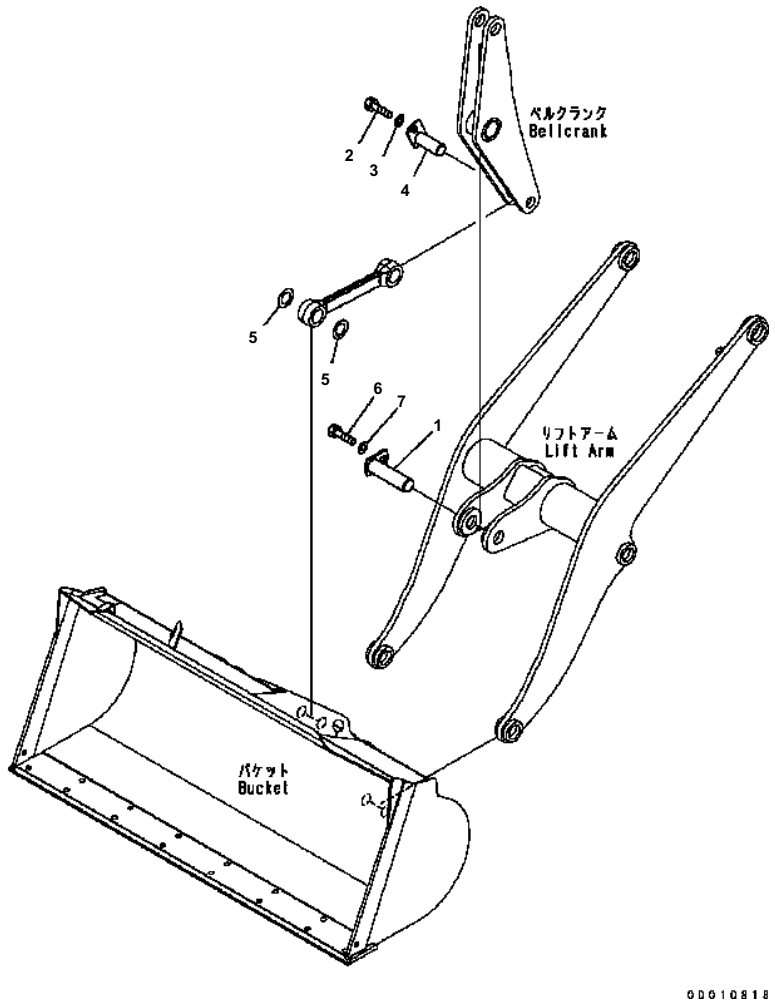

WA200-5 S/N B10001-UP

LIFT ARM AND BELLCRANK (MOUTING PARTS)

Item	Part No.	Description	Qty	Options
1	417-70-31740	PIN	1	SN:B10001--
2	01010-81625	BOLT	1	SN:B10001--
3	421-70-11280	WASHER	1	SN:B10001--
4	418-70-11921	PIN	2	SN:B10001--
5	417-70-11340	SHIM¤ 1.5MM	2	SN:B10001--
6	01010-81625	BOLT	2	SN:B10001--
7	421-70-11280	WASHER	2	SN:B10001--

Ref. T4110-02A0 Page 330030

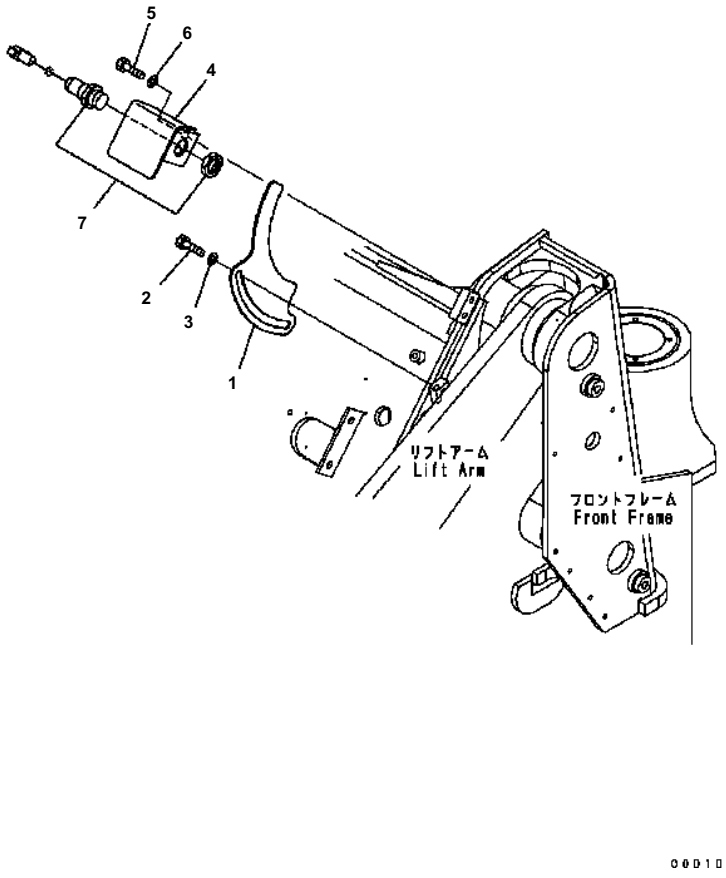

WA200-5 S/N B10001-UP

LIFT ARM AND BELLCRANK (BOOM KICK OUT)

Item	Part No.	Description	Qty	Options
1	417-43-31140	PLATE	1	SN:B10001--
2	01010-81225	BOLT	2	SN:B10001--
3	01643-31232	WASHER	2	SN:B10001--
4	418-43-39140	BRACKET	1	SN:B10001--
5	01010-81230	BOLT	2	SN:B10001--
6	01643-31232	WASHER	2	SN:B10001--
7	56B-06-15610	SWITCH	1	SN:B10001--

Ref. T4110-03A0 Page 330040

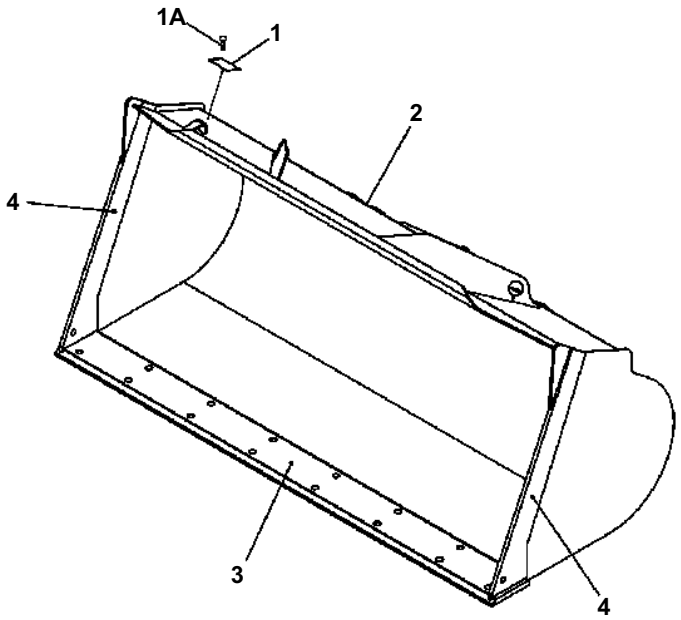

WA200-5 S/N B10001-UP

BUCKET 1.9M2 (WITH B.O.C., 2.0M3)

Item	Part No.	Description	Qty	Options
	417-70-B2100	BUCKET 2.0M	1	SN:B10001--
1	416-70-22190	・ PLATE, NAME	1	SN:B10001--
1A	04418-13060	・ SCREW	4	SN:B10001--
2	417-70-B2110	・ BUCKET	1	SN:B10001--
3	417-70-B1610	・・ EDGE, (WELDED)	1	SN:B10001--
4	417-70-B1470	・・ PLATE, (WELDED)	2	SN:B10001--

Ref. T4120-01A1 Page 330050

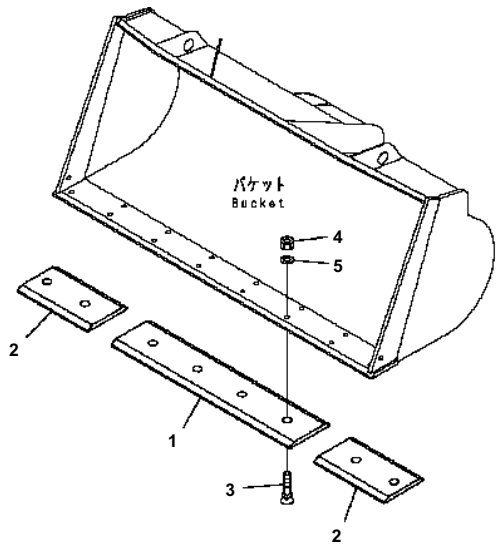

PE48348

WA200-5 S/N B10001-UP

BOLT ON CUTTING EDGE

Item	Part No.	Description	Qty	Options
1	417-70-B3170	EDGE, CENTER	1	SN:B10001--
2	417-70-B3160	EDGE, SIDE	2	SN:B10001--
3	02090-11475	BOLT	8	SN:B10001--
4	02290-11422	NUT	8	SN:B10001--
5	01643-32260	WASHER	8	SN:B10001--

Ref. T4122-21A1 Page 330060

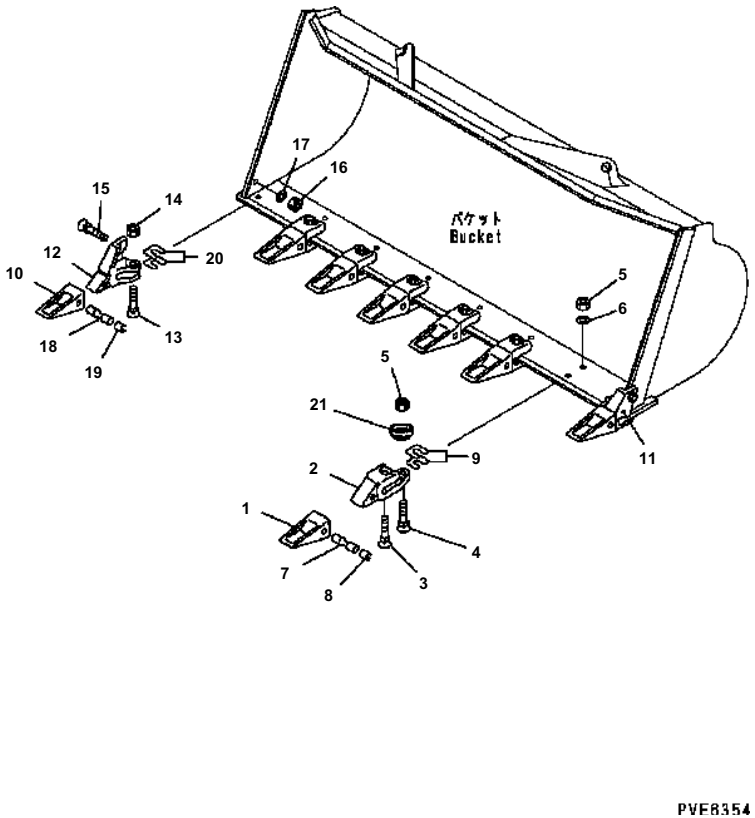

WA200-5 S/N B10001-UP

TOOTH (TIP TOOTH)

Item	Part No.	Description	Qty	Options
1	20X-70-14160	TOOTH	6	SN:B10001--
2	418-847-1120	ADAPTER	6	SN:B10001--
3	423-70-13180	BOLT	12	SN:B10056--
	423-70-13180	BOLT	6	SN:B10001--B10055
4	142-70-12260	BOLT	6	SN:B10001--B10055
5	02290-11422	NUT	12	SN:B10001--
6	01643-32260	WASHER	6	SN:B10001--B10055
7	20X-70-14170	PIN	6	SN:B10001--
8	20X-70-14180	SPRING	6	SN:B10001--
9	419-70-13180	SHIM¤ 1.0MM	6	SN:B10001--
	419-70-13190	SHIM¤ 0.5MM	6	SN:B10001--
10	20X-70-14160	TOOTH	2	SN:B10001--
11	418-847-1160	ADAPTER {L.H.}	1	SN:B10001--
12	418-847-1170	ADAPTER {R.H.}	1	SN:B10001--
13	423-70-13180	BOLT	2	SN:B10001--
14	02290-11422	NUT	2	SN:B10001--
15	418-70-13140	BOLT	2	SN:B10001--
16	02290-11422	NUT	2	SN:B10001--
17	01643-32260	WASHER	2	SN:B10001--
18	20X-70-14170	PIN	2	SN:B10001--
19	20X-70-14180	SPRING	2	SN:B10001--
20	419-70-13180	SHIM¤ 1.0MM	2	SN:B10001--
	419-70-13190	SHIM¤ 0.5MM	2	SN:B10001--
21	417-70-B1640	PROTECTOR	6	SN:B10056--

Ref. T4130-01A1 Page 330070

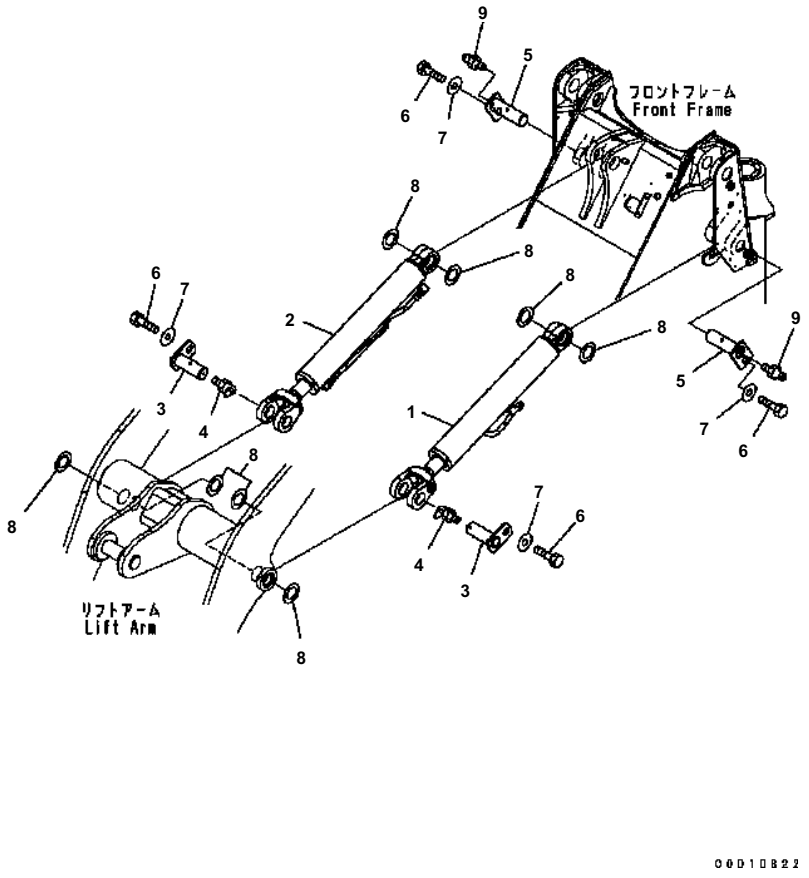

WA200-5 S/N B10001-UP

LIFT CYLINDER

Item	Part No.	Description	Qty	Options
1	(707-00-XZ731)	CYLINDER ASS'Y {L.H.}	1	SN:B10076--
	(707-00-XZ730)	CYLINDER ASS'Y {L.H.}	1	SN:B10001--B10075
2	(707-00-XZ741)	CYLINDER ASS'Y {R.H.}	1	SN:B10076--
	(707-00-XZ740)	CYLINDER ASS'Y {R.H.}	1	SN:B10001--B10075
3	417-63-32220	PIN	2	SN:B10001--
4	07020-00900	FITTING {GREASE}	2	SN:B10001--
5	417-63-32230	PIN	2	SN:B10001--
6	01010-81625	BOLT	4	SN:B10001--
7	421-70-11280	WASHER	4	SN:B10001--
8	417-70-11340	SHIM¤ 1.5MM {1.5MM}	8	SN:B10001--
9	07020-00000	FITTING {GREASE}	2	SN:B10001--

Ref. T4140-01A0 Page 330080

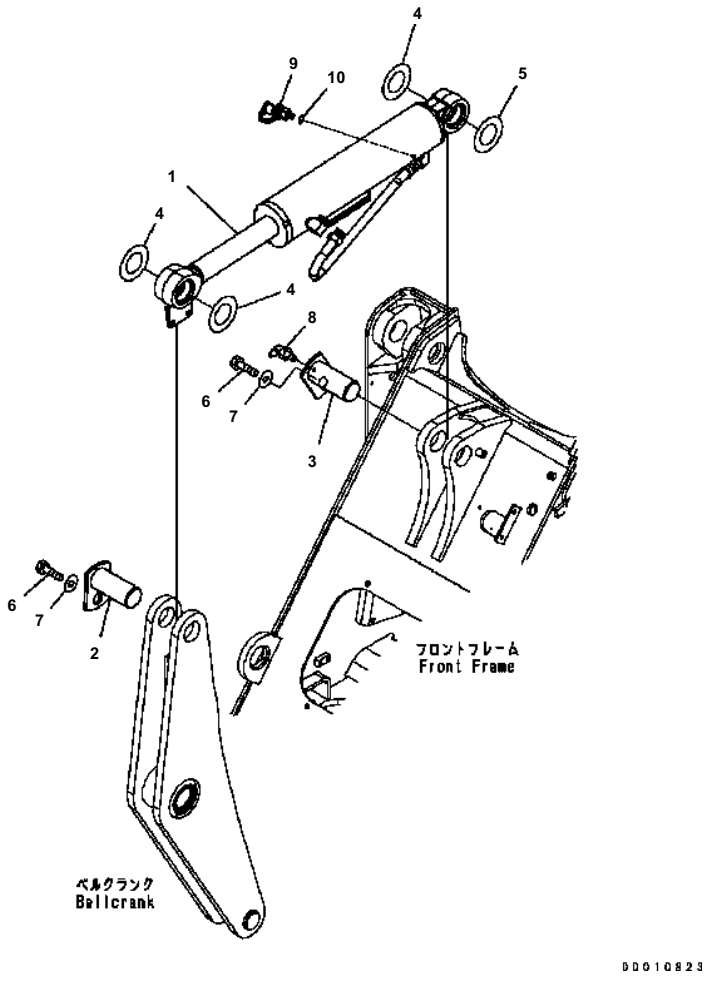

WA200-5 S/N B10001-UP

BUCKET CYLINDER

Item	Part No.	Description	Qty	Options
1	(707-00-XZ750)	CYLINDER ASS'Y	1	SN:B10001--
2	418-70-11941	PIN	1	SN:B10001--
3	417-63-33230	PIN	1	SN:B10001--
4	418-70-11440	SHIM¤ 3.0MM {3.0MM}	3	SN:B10001--
5	418-70-11430	SHIM¤ 1.5MM {1.5MM}	1	SN:B10001--
6	01010-81625	BOLT	2	SN:B10001--
7	421-70-11280	WASHER	2	SN:B10001--
8	07020-00900	FITTING	1	SN:B10001--
9	799-101-5220	NIPPLE	1	SN:B10001--
10	07002-11023	O-RING	1	SN:B10001--

Ref. T4150-01A0 Page 330090

MARKS AND PLATES

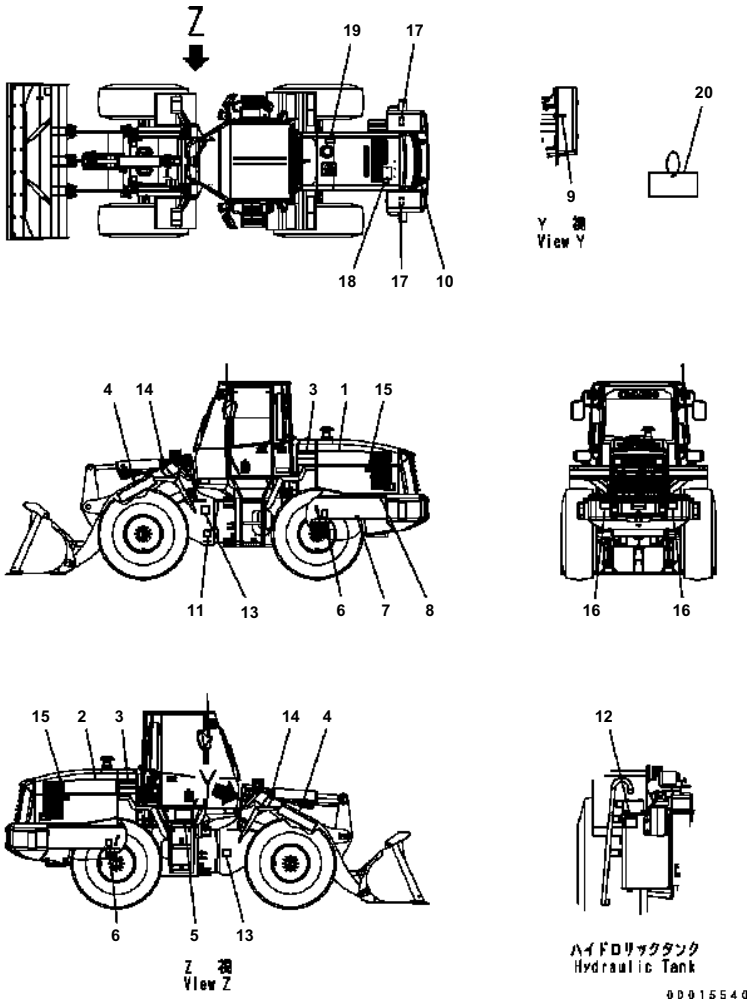

MARK AND PLATES (SPANISH)

Item	Part No.	Description	Qty	Options
1	417-93-B3210	PLATE {WA200}	1	SN:B10236--
	417-93-32210	PLATE {WA200}	1	SN:B10153--B10235
2	417-93-B3220	PLATE {WA200}	1	SN:B10236--
	417-93-32220	PLATE {WA200}	1	SN:B10153--B10235
3	417-93-32230	PLATE	2	SN:B10153--
4	09690-P0800	PLATE¤ MARK {KOMATSU}	2	SN:B10153--
5	417-V00-3121	OIL CHART {STRIPE}	1	SN:B10153--
6	09960-01001	PLATE¤ MARK {LIFTING EYE}	4	SN:B10153--
	417-V00-3110	PLATE	1	SN:B10153--
7	☆	・ PLATE {REAR AXLE}	1	SN:B10153--
8	☆	・ PLATE {RADIATOR DRAIN}	1	SN:B10153--
9	☆	・ PLATE {CYLINDER}	1	SN:B10153--
10	09669-0000E	PLATE¤ CAUTION {DIESEL FUEL}	1	SN:B10153--
11	09161-21000	PLATE {FRAME LOCK}	1	SN:B10153--
12	09653-01001	PLATE¤ SAFETY {HIGH TEMPERATURE}	2	SN:B10153--
13	09162-21000	PLATE {ARTICULATE}	2	SN:B10153--
14	09807-C0883	PLATE¤ SAFETY{WORK MACHINE FALL}	2	SN:B10153--
15	09667-01001	PLATE¤ SAFETY {FAN}	2	SN:B10153--
16	09812-11000	PLATE¤ SAFETY {APPROACH}	2	SN:B10153--
17	09808-01000	PLATE¤ SAFETY {ELECTRIC SHOCK}	2	SN:B10153--
18	09668-01001	PLATE¤ SAFETY {HIGH TEMPERATURE}	1	SN:B10153--
19	09659-51000	PLATE	1	SN:B10153--
20	09963-01001	TAG {TAG}	1	SN:B10153--

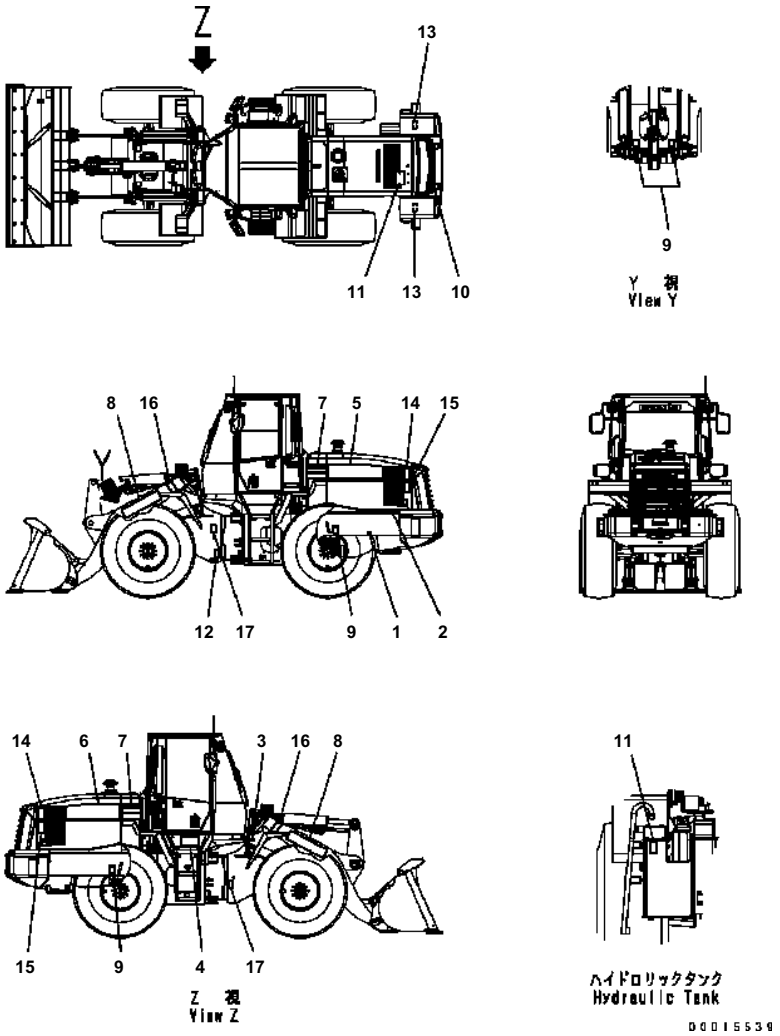

WA200-5 S/N B10001-UP

MARK AND PLATES (PORTUGUESE)

Item	Part No.	Description	Qty	Options
	418-93-B1170	PLATE	1	SN:B10001--
1	☆	· PLATE, REAR AXLE	1	SN:B10001--
2	☆	· PLATE, RADIATOR DRAIN	1	SN:B10001--
3	☆	· PLATE, CYLINDER	1	SN:B10001--
4	418-93-B1111	OIL CHART	1	SN:B10001--
5	417-93-B3210	PLATE, WA200	1	SN:B10001--
6	417-93-B3220	PLATE, WA200	1	SN:B10001--
7	417-93-32230	PLATE	2	SN:B10001--
8	09690-P0800	PLATE, MARK, KOMATSU	2	SN:B10001--
9	09960-01601	PLATE, MARK, LIFTING EYE	4	SN:B10001--
10	09669-0000E	PLATE, CAUTION, DIESEL FUEL	1	SN:B10001--
11	09653-A0641	PLATE, SAFETY, HIGH TEMPERATURE	2	SN:B10001--
12	09161-C0641	PLATE, SAFETY, FRAME LOCK	1	SN:B10001--
13	09808-A1201	PLATE, SAFETY, ELECTRIC SHOCK	2	SN:B10001--
14	09806-C0883	PLATE, SAFETY, APPROACH	2	SN:B10001--
15	09667-A0880	PLATE, SAFETY, FAN	2	SN:B10001--
16	09807-C0883	PLATE, SAFETY, WORK MACHINE FALL	2	SN:B10001--
17	09162-C0641	PLATE, SAFETY, ARTICULATE	2	SN:B10001--

Ref. U0100-01A3 Page 360020

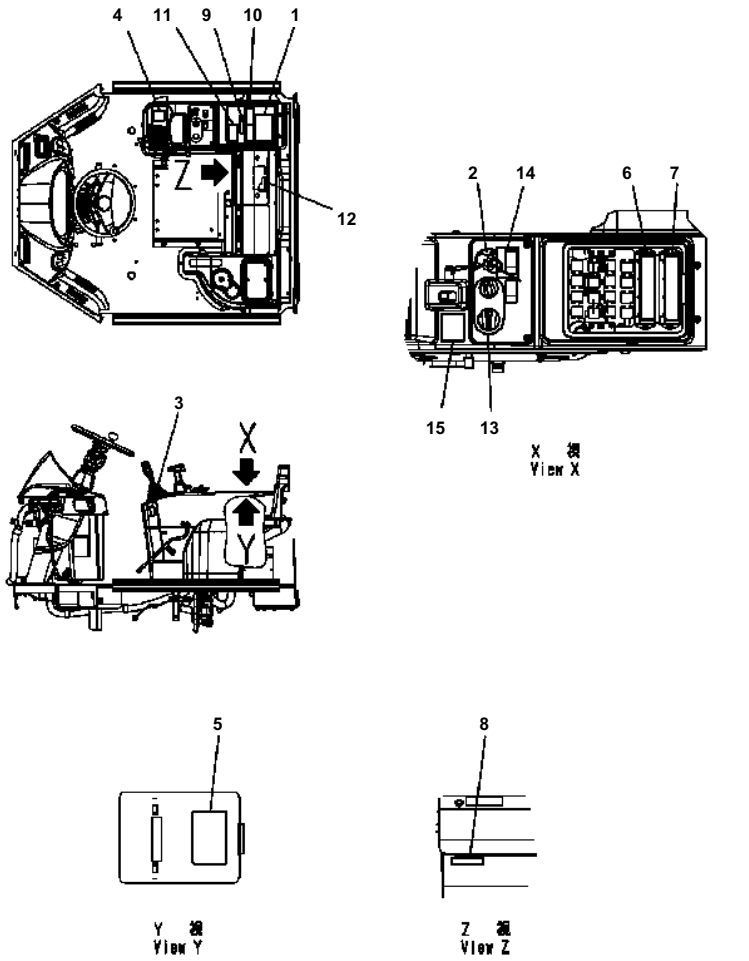

WA200-5 S/N B10001-UP

MARK AND PLATES (FLOOR DECAL) (SPANISH)

Item	Part No.	Description	Qty	Options
	418-V00-3210	PLATE	1	SN:B10001--
1	☆	· PLATE {STARTING}	1	SN:B10001--
2	☆	· PLATE {MAIN SWITCH}	1	SN:B10001--
3	☆	· PLATE {LEVER LOCK}	1	SN:B10001--
4	☆	· PLATE {SHIFT PATTERN}	1	SN:B10001--
5	☆	· PLATE {RELAY}	1	SN:B10001--
6	☆	· PLATE {FUSE}	1	SN:B10001--
7	☆	· PLATE {FUSE}	1	SN:B10001--
8	☆	· PLATE {FILTER}	1	SN:B10001--
9	☆	PLATE¤ SAFETY {READ MANUAL}	1	SN:B10001--
10	☆	PLATE¤ SAFETY {WORK EQUIPMENT LEVER LOCK}	1	SN:B10001--
11	☆	PLATE¤ SAFETY {ELECTRIC SHOCK}	1	SN:B10001--
12	418-V00-3220	PLATE {RELAY}	1	SN:B10001--
13	418-93-B1180	PLATE {HST SPEED CONTROL}	1	SN:B10001--
14	418-93-B1210	DECAL {TRACTION CONTROL}	1	SN:B10001--
15	418-93-B1190	DECAL {F-R SELECTOR SWITCH}	1	SN:B10001--

Ref. U0100-02A1 Page 360030

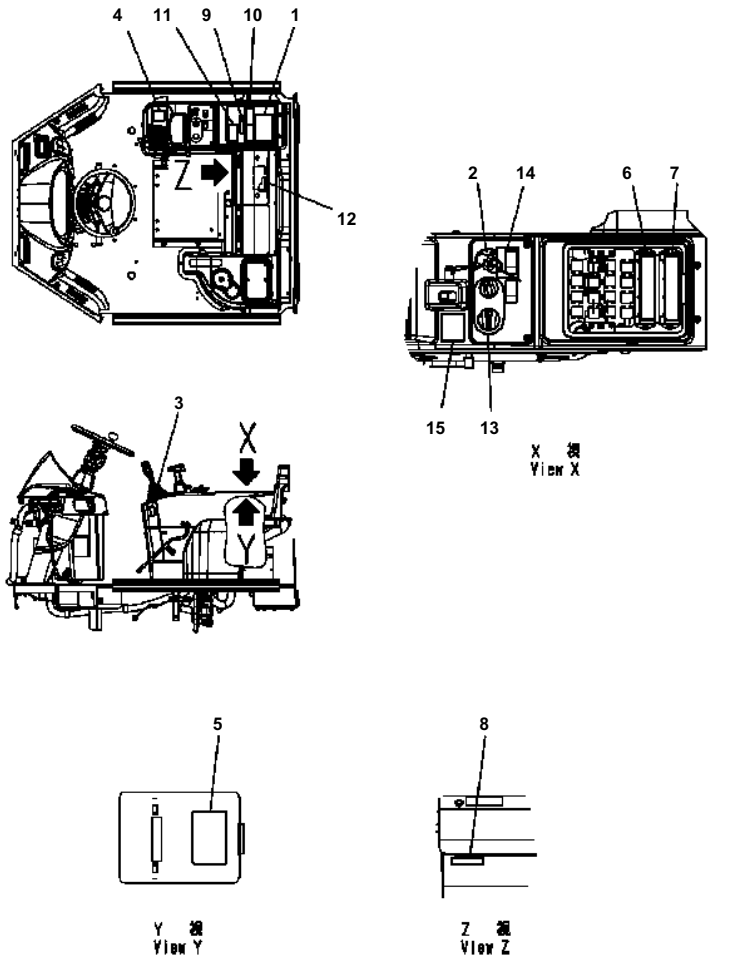

WA200-5 S/N B10001-UP

MARK AND PLATES (FLOOR DECAL) (PORTUGUESE)

Item	Part No.	Description	Qty	Options
	418-93-B1150	PLATE	1	SN:B10001--
1	☆	· PLATE {STARTING}	1	SN:B10001--
2	☆	· PLATE {MAIN SWITCH}	1	SN:B10001--
3	☆	· PLATE {LEVER LOCK}	1	SN:B10001--
4	☆	· PLATE {SHIFT PATTERN}	1	SN:B10001--
5	☆	· PLATE {RELAY}	1	SN:B10001--
6	☆	· PLATE {FUSE}	1	SN:B10001--
7	☆	· PLATE {FUSE}	1	SN:B10001--
8	☆	· PLATE {FILTER}	1	SN:B10001--
9	☆	PLATE¤ SAFETY {READ MANUAL}	1	SN:B10001--
10	☆	PLATE¤ SAFETY {WORK EQUIPMENT LEVER LOCK}	1	SN:B10001--
11	☆	PLATE¤ SAFETY {ELECTRIC SHOCK}	1	SN:B10001--
12	418-93-B1160	PLATE {RELAY}	1	SN:B10001--
13	418-93-B1120	PLATE {HST SPEED CONTROL}	1	SN:B10001--
14	418-93-B1140	PLATE {TRACTION CONTROL}	1	SN:B10001--
15	418-93-B1130	DECAL {F-R SELECTOR SWITCH}	1	SN:B10001--

Ref. U0100-02A2 Page 360050

ACCESSORY

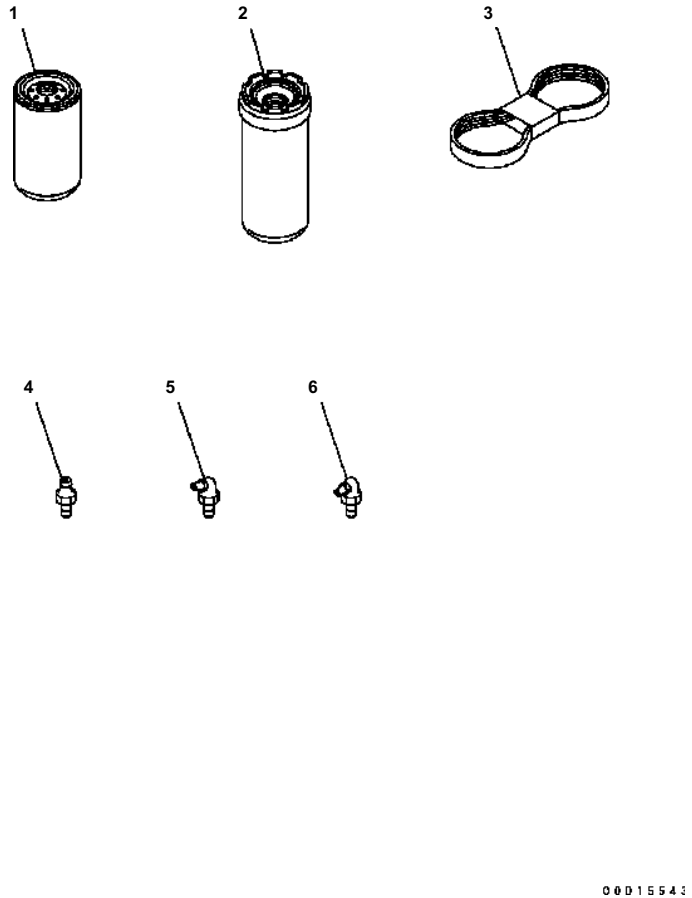

WA200-5 S/N B10001-UP

SPARE PARTS (EXCEPT JAPAN)

Item	Part No.	Description	Qty	Options
1	418-18-34160	CARTRIDGE	1	SN:B10001--
2	419-60-35152	CARTRIDGE	1	SN:B10001--
3	6732-81-6170	BELT	1	SN:B10001--
4	07020-00000	FITTING	4	SN:B10001--
5	07020-00675	FITTING	4	SN:B10001--
6	07020-00900	FITTING	4	SN:B10001--

Ref. V0100-01A1 Page 390010

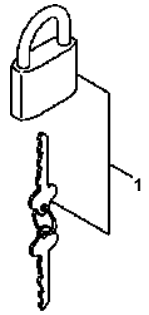

PTE7728

WA200-5 S/N B10001-UP

TOOL (LOCK)

Item	Part No.	Description	Qty	Options
1	09460-00004	LOCK	1	SN:B10001--

Ref. V0300-01A2 Page 390020

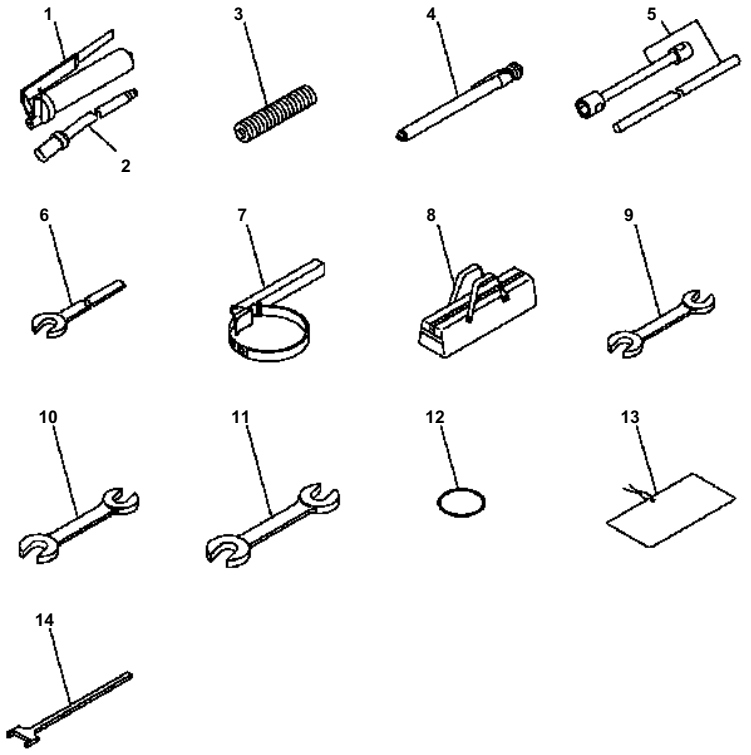

WA200-5 S/N B10001-UP

TOOL (TOOL KIT)

Item	Part No.	Description	Qty	Options
	07952-70004	GREASE PUMP ASS'Y	1	SN:B10001--
1	07950-10450	· PUMP	1	SN:B10001--
2	07951-41017	· NOZZLE	1	SN:B10001--
3	07950-90403	CARTRIDGE	1	SN:B10001--
4	09289-00000	GAUGE	1	SN:B10001--
5	417-98-B1120	WRENCH	1	SN:B10001--
6	09001-03600	WRENCH	1	SN:B10001--
7	09019-08035	WRENCH	1	SN:B10001--
8	09056-04613	BAG	1	SN:B10001--
9	09002-01417	WRENCH¤ 14X17	1	SN:B10001--
10	09002-01922	WRENCH¤ 19X22	1	SN:B10001--
11	09002-03032	WRENCH¤ 30X32	1	SN:B10001--
12	07000-15090	O-RING	1	SN:B10001--
13	09963-03001	TAG	1	SN:B10001--
14	418-98-31110	GAUGE	1	SN:B10001--

Ref. V0300-01A3 Page 390030

SERVICE KIT AND COMPONENT PARTS

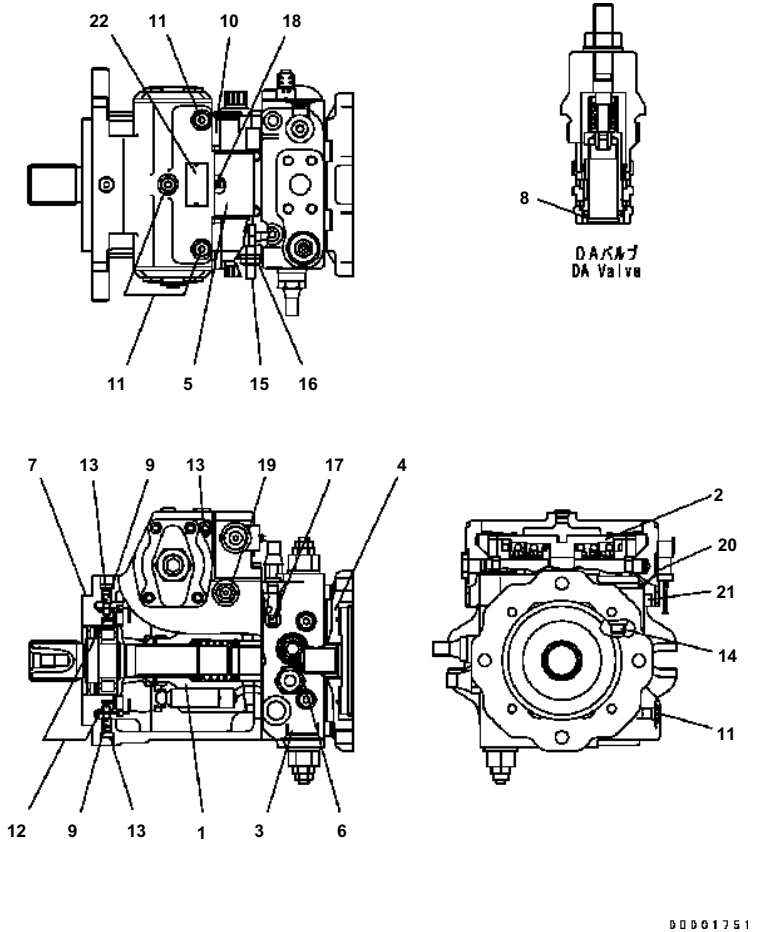

WA200-5 S/N B10001-UP

PUMP (1/14)

Item	Part No.	Description	Qty	Options
PARTS MARKED B1¤ CANNNOT BE SUPPLIED AS AN INDIVIDUAL PART.IT IS SUPPLIED AS A S ET OF OTHER PARTS MARKED B1.				
	417-18-31101	PUMP	1	SN:B10001--
1	(★UC4100516369)	· ROTARY GROUP	1	SN:B10001--
2	(★UC4020162421)	· HD CONTROL	1	SN:B10001--
3	(★UC4100656147)	· COVER	1	SN:B10001--
4	(★UC4706068108)	· GEAR PUMP ASS'Y	1	SN:B10001--
5	(★UC4020482808)	· VALVE	1	SN:B10001--
6	(★UC4720237588)	· DA CARTRIDGE ASS'Y	1	SN:B10001--
7	UC1100679859	· HOUSING (B1)	1	SN:B10001--
8	UC1704080282	· ORIFICE	1	SN:B10001--
9	UC1704497149	· PIN	2	SN:B10001--
10	UC4100104453	· PLUG	1	SN:B10001--
	☆	· · PLUG	1	SN:B10001--
	UC1301205004	· · O-RING	1	SN:B10001--
11	UC4100104426	· PLUG	4	SN:B10001--
	☆	· · PLUG	1	SN:B10001--
	UC1301169009	· · O-RING	1	SN:B10001--
12	UC1701544279	· PIN\(B1\)	2	SN:B10001--
13	UC1701533646	· PLUG	4	SN:B10001--
14	UC1700879134	· PLUG	1	SN:B10001--
15	(★UC1720356169)	· PIN	1	SN:B10001--
16	(★UC1700874056)	· NUT	1	SN:B10001--
17	UC1704267067	· ORIFICE	1	SN:B10001--
18	UC1181066129	· ORIFICE	1	SN:B10001--
19	UC4100695445	· BUSHING ASS'Y	1	SN:B10001--
	☆	· · BUSHING	1	SN:B10001--
	UC1301181009	· · O-RING	1	SN:B10001--
20	UC1100695026	· · BRACKET	1	SN:B10001--
21	UC1301582008	· BOLT	1	SN:B10001--
22	☆	· PLATE ASS'Y	1	SN:B10001--

Ref. Y1610-01A0 Page 420010

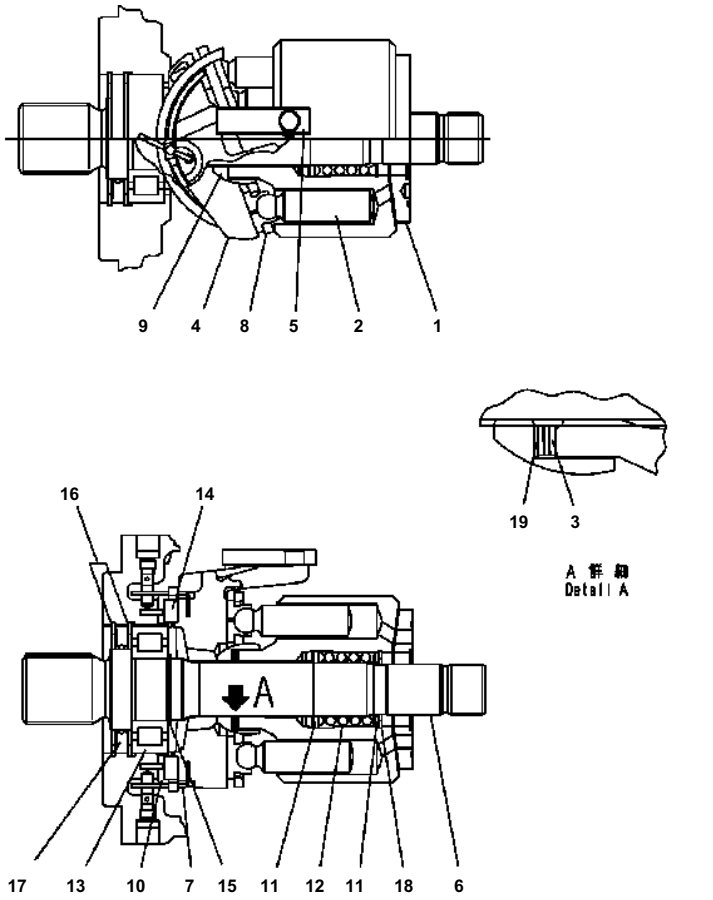

WA200-5 S/N B10001-UP

PUMP (2/14)

Item	Part No.	Description	Qty	Options
	(417-18-31101)	PUMP	1	SN:B10001--
	(★UC4100516369)	· ROTARY GROUP	1	SN:B10001--
1	(★UC4100663833)	· · CYLINDER BLOCK	1	SN:B10001--
2	(★UC4704145157)	· · PISTON	9	SN:B10001--
3	UC1709217287	· · SPRING	1	SN:B10001--
4	UC1709222555	· · HANGER	1	SN:B10001--
5	UC1704498106	· · GUIDE	1	SN:B10001--
6	UC1099215509	· · SHAFT	1	SN:B10001--
7	UC1704179593	· · PIN	2	SN:B10001--
8	(★UC1709217296)	· · RETAINER	1	SN:B10001--
9	(★UC1709217306)	· · GUIDE	1	SN:B10001--
10	UC1020665932	· · BEARING	1	SN:B10001--
11	UC1704498858	· · SHIM	2	SN:B10001--
12	UC1704356497	· · SPRING	1	SN:B10001--
13	UC1701531044	· · BEARING	1	SN:B10001--
14	UC1708301657	· · BEARING	1	SN:B10001--
15	UC1302133001	· · RING	1	SN:B10001--
16	UC1726000019	· · WASHER	2	SN:B10001--
17	UC1026018204	· · RING {SEAL}	1	SN:B10001--
18	UC1700845562	· · WASHER	1	SN:B10001--
19	(★UC1704329835)	· · SHIM	1	SN:B10001--
	(★UC1704329844)	· · SHIM	1	SN:B10001--
	(★UC1704329853)	· · SHIM	1	SN:B10001--
	(★UC1704329862)	· · SHIM	1	SN:B10001--

Ref. Y1610-02A0 Page 420020

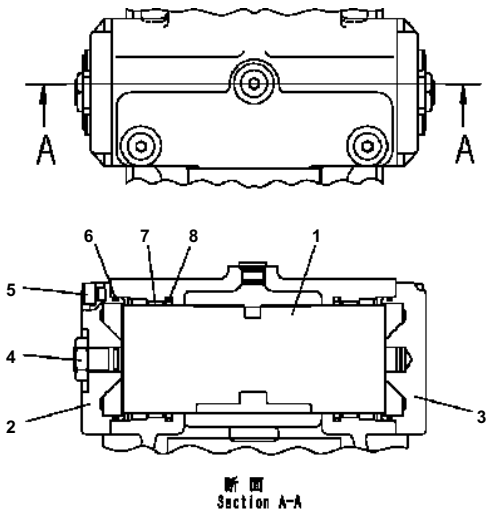

D0D01753

WA200-5 S/N B10001-UP

PUMP (3/14)

Item	Part No.	Description	Qty	Options
	(417-18-31101)	PUMP	1	SN:B10001--
	(★UC4020162421)	· HD CONTROL	1	SN:B10001--
1	(★UC4020255367)	· · PISTON	1	SN:B10001--
2	(★UC1720106212)	· · COVER	1	SN:B10001--
3	UC1720106221	· · COVER	1	SN:B10001--
4	(★UC1701574775)	· · NUT	1	SN:B10001--
5	UC1301586009	· · BOLT	8	SN:B10001--
6	UC1300297002	· · O-RING	2	SN:B10001--
7	UC1726008389	· · RING	2	SN:B10001--
8	UC1726002703	· · RING	2	SN:B10001--

Ref. Y1610-03A0 Page 420030

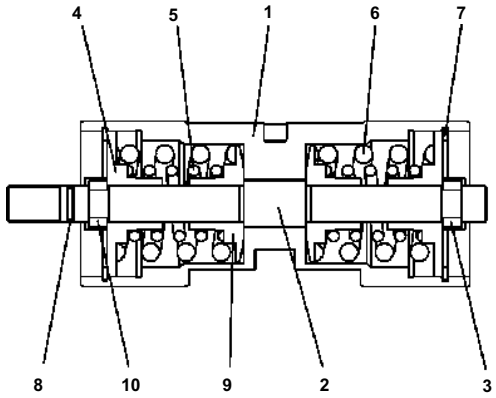

00001754

WA200-5 S/N B10001-UP

PUMP (4/14)

Item	Part No.	Description	Qty	Options
	(417-18-31101)	PUMP	1	SN:B10001--
	(★UC4020255367)	PISTON	1	SN:B10001--
1	(★UC1020155343)	PISTON	1	SN:B10001--
2	(★UC1709221093)	ROD	1	SN:B10001--
3	UC1726007679	RING	2	SN:B10001--
4	UC1720201005	COLLER	2	SN:B10001--
5	UC1709221149	SPRING	2	SN:B10001--
6	UC1709221158	SPRING	2	SN:B10001--
7	(★UC1708303121)	WASHER	2	SN:B10001--
8	UC1300038005	O-RING	1	SN:B10001--
9	UC1709221167	COLLER	2	SN:B10001--
10	(★UC1720204939)	RING	2	SN:B10001--
	(★UC1720204949)	RING	2	SN:B10001--
	(★UC1720204958)	RING	2	SN:B10001--
	(★UC1720204967)	RING	2	SN:B10001--
	(★UC1720204976)	RING	2	SN:B10001--
	(★UC1720204985)	RING	2	SN:B10001--
	(★UC1720207565)	RING	2	SN:B10001--
	(★UC1720297574)	RING	2	SN:B10001--
	(★UC1720431499)	RING	2	SN:B10001--

Ref. Y1610-04A0 Page 420040

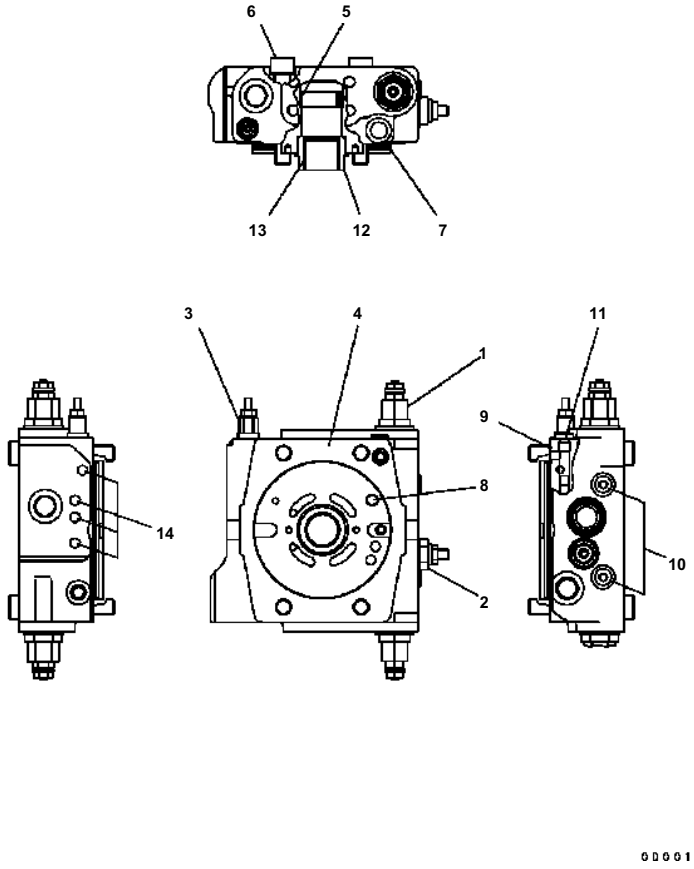

WA200-5 S/N B10001-UP

PUMP (5/14)

Item	Part No.	Description	Qty	Options
PARTS MARKED B4¤ CANNNOT BE SUPPLIED AS AN INDIVIDUAL PART.IT IS SUPPLIED AS A S ET OF OTHER PARTS MARKED B4.				
PARTS MARKED B5¤ CANNNOT BE SUPPLIED AS AN INDIVIDUAL PART.IT IS SUPPLIED AS A S ET OF OTHER PARTS MARKED B5.				
	(417-18-31101)	PUMP	1	SN:B10001--
	UC4100656147	· COVER	1	SN:B10001--
1	(★UC4726018787)	· · RELIEF VALVE	2	SN:B10001--
2	(★UC4704348567)	· · VALVE	1	SN:B10001--
3	(★UC4704373637)	· · CUT-OFF VALVE	1	SN:B10001--
4	UC1100656159	· · COVER (B4)	1	SN:B10001--
5	UC1704491361	· · METAL (B4)	1	SN:B10001--
6	UC1301638009	· · BOLT	4	SN:B10001--
7	UC1303046816	· · O-RING	1	SN:B10001--
8	UC1701539213	· · PLUG (B4)	1	SN:B10001--
9	UC1300038005	· · O-RING	1	SN:B10001--
10	(★UC4100104426)	· · PLUG	2	SN:B10001--
11	UC1701516926	· · PLUG	1	SN:B10001--
12	UC1704405379	· · BUSHING (B5)	1	SN:B10001--
13	UC1704357904	· · METAL (B5)	1	SN:B10001--
14	UC1701538807	· · PLUG (B4)	2	SN:B10001--

Ref. Y1610-05A0 Page 420050

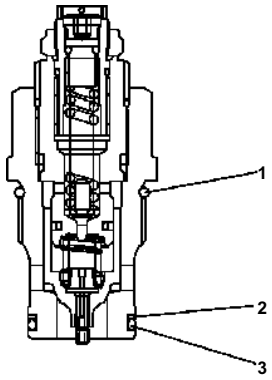

00001751

WA200-5 S/N B10001-UP

PUMP (6/14)

Item	Part No.	Description	Qty	Options
	(417-18-31101)	PUMP	1	SN:B10001--
	UC4726018787	・ RELIEF VALVE	2	SN:B10001--
1	UC1300172004	・・ O-RING	1	SN:B10001--
2	UC1800141454	・・ BACK-UP RING	1	SN:B10001--
3	UC1300188009	・・ O-RING	1	SN:B10001--

Ref. Y1610-06A0 Page 420060

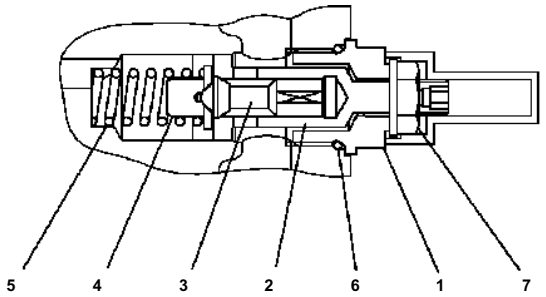

DDD01757

WA200-5 S/N B10001-UP

PUMP (7/14)

Item	Part No.	Description	Qty	Options
	(417-18-31101)	PUMP	1	SN:B10001--
	(★UC4704348567)	・ VALVE	1	SN:B10001--
1	(★UC1704361673)	・・ PLUG	1	SN:B10001--
2	(★UC1704496229)	・・ SCREW	1	SN:B10001--
3	(★UC1704358998)	・・ PISTON	1	SN:B10001--
4	(★UC1720103369)	・・ SPRING SEAT	1	SN:B10001--
5	(★UC1704407659)	・・ SPRING	1	SN:B10001--
6	UC1300170008	・・ O-RING	1	SN:B10001--
7	(★UC1701532717)	・・ NUT	1	SN:B10001--

Ref. Y1610-07A0 Page 420070

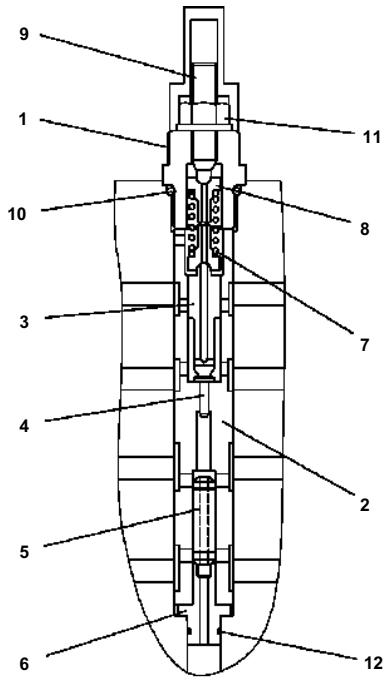

00001758

WA200-5 S/N B10001-UP

PUMP (8/14)

Item	Part No.	Description	Qty	Options
	(417-18-31101)	PUMP	1	SN:B10001--
	UC4704373637	· CUT-OFF VALVE	1	SN:B10001--
1	(★UC1704365693)	· · PLUG	1	SN:B10001--
2	UC1704365538	· · BARREL	1	SN:B10001--
3	(★UC1704321629)	· · POPPET	1	SN:B10001--
4	(★UC1704321639)	· · PISTON	1	SN:B10001--
5	UC1704321648	· · SPOOL	1	SN:B10001--
6	UC1704362841	· · VALVE SEAT{VALVE}	1	SN:B10001--
7	(★UC1720094027)	· · SPRING	1	SN:B10001--
8	(★UC1720430928)	· · SPRING SEAT	2	SN:B10001--
9	(★UC1704321675)	· · SCREW	1	SN:B10001--
10	UC1300142003	· · O-RING	1	SN:B10001--
11	(★UC1701527072)	· · NUT	1	SN:B10001--
12	UC1300022009	· · O-RING	1	SN:B10001--

Ref. Y1610-08A0 Page 420080

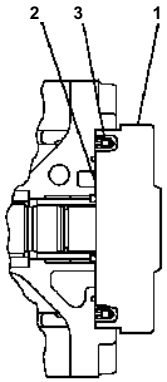

GDG11495

WA200-5 S/N B10001-UP

PUMP (9/14)

Item	Part No.	Description	Qty	Options
	(417-18-31101)	PUMP	1	SN:B10001--
	UC4706068108	・GEAR PUMP ASS'Y	1	SN:B10001--
1	(★UC4020777371)	・・GEAR PUMP	1	SN:B10001--
2	UC4020777894	・・PLATE	1	SN:B10001--
3	UC1026024474	・・ELEMENT	1	SN:B10001--

Ref. Y1610-09A0 Page 420090

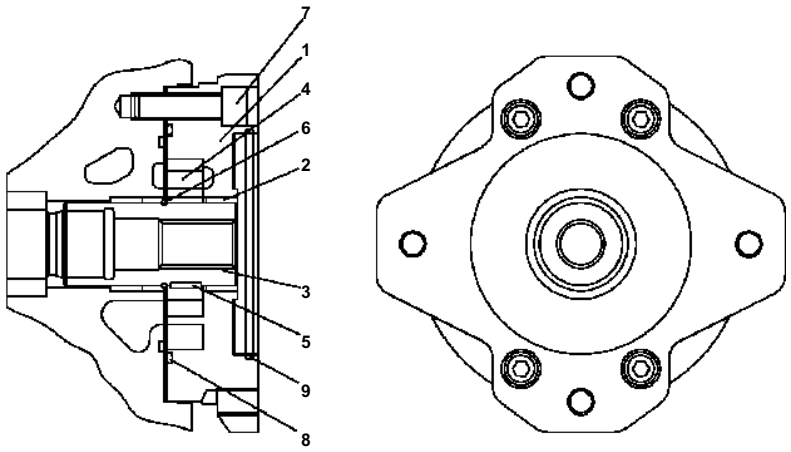

WA200-5 S/N B10001-UP

PUMP (10/14)

Item	Part No.	Description	Qty	Options
PARTS MARKED B6¤ CANNNOT BE SUPPLIED AS AN INDIVIDUAL PART.IT IS SUPPLIED AS A SET OF OTHER PARTS MARKED B6.				
PARTS MARKED B7¤ CANNNOT BE SUPPLIED AS AN INDIVIDUAL PART.IT IS SUPPLIED AS A SET OF OTHER PARTS MARKED B7.				
	(417-18-31101)	PUMP	1	SN:B10001--
	(★UC4020777371)	・GEAR PUMP	1	SN:B10001--
1	UC1020777952	・・FLANGE (B6)	1	SN:B10001--
2	UC1704491361	・・METAL (B6)	1	SN:B10001--
3	UC1720131603	・・DRIVE SHAFT (B7)	1	SN:B10001--
4	UC4020062587	・・GEAR (B6)	1	SN:B10001--
5	UC1720256499	・・KEY (B7)	1	SN:B10001--
6	UC1701569306	・・RING	1	SN:B10001--
7	UC1090830917	・・BOLT	4	SN:B10001--
8	UC1300449001	・・O-RING	1	SN:B10001--
9	UC1300313003	・・O-RING	1	SN:B10001--

Ref. Y1610-10A0 Page 420100

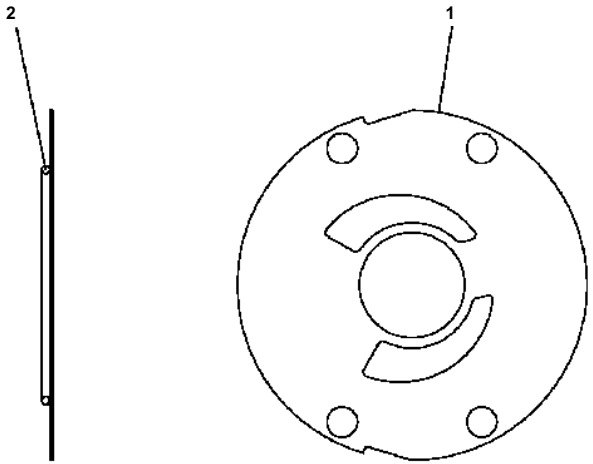

WA200-5 S/N B10001-UP

PUMP (11/14)

Item	Part No.	Description	Qty	Options
	(417-18-31101)	PUMP	1	SN:B10001--
	UC4020777894	・ PLATE	1	SN:B10001--
1	☆	・・ PLATE	1	SN:B10001--
2	UC1300449001	・・ O-RING	1	SN:B10001--

Ref. Y1610-11A0 Page 420110

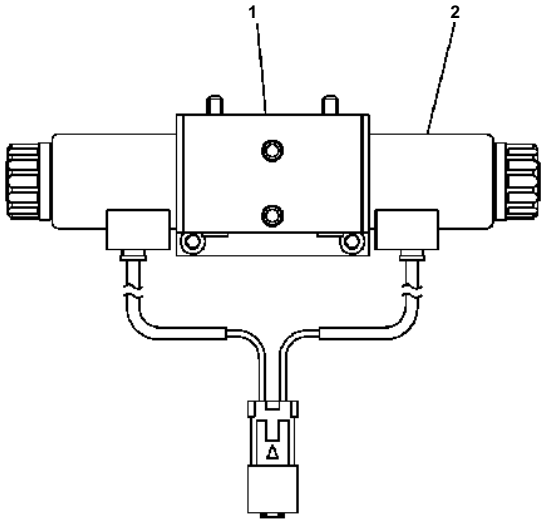

D0002770

WA200-5 S/N B10001-UP

PUMP (12/14)

Item	Part No.	Description	Qty	Options
	(417-18-31101)	PUMP	1	SN:B10001--
	(UC4020482808)	・ VALVE	1	SN:B10001--
1	(★UC4020481906)	・・ VALVE HOUSING ASS'Y	1	SN:B10001--
2	UC1026011625	・・ SOLENOID	1	SN:B10001--

Ref. Y1610-12A0 Page 420120

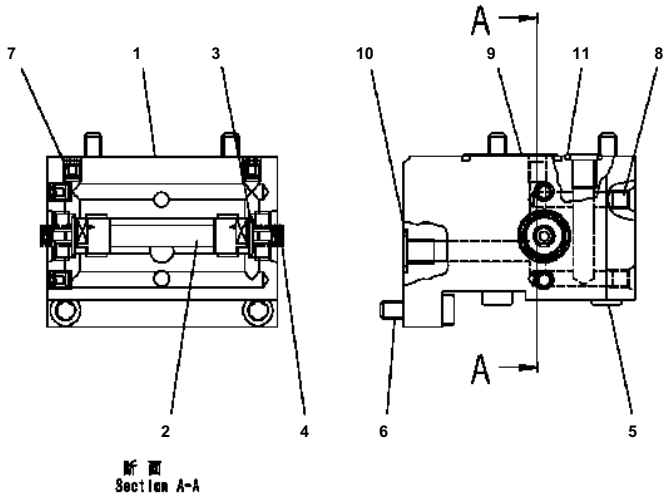

矢 視
Section A-A

WA200-5 S/N B10001-UP

PUMP (13/14)

Item	Part No.	Description	Qty	Options
PARTS MARKED B8¤ CANNNOT BE SUPPLIED AS AN INDIVIDUAL PART.IT IS SUPPLIED AS A S ET OF OTHER PARTS MARKED B8.				
	(417-18-31101)	PUMP	1	SN:B10001--
	UC4020481906	・VALVE HOUSING ASS'Y	1	SN:B10001--
1	UC1020481826	・・HOUSING (B8)	1	SN:B10001--
2	UC1020481871	・・CONTROL PISTON	1	SN:B10001--
3	UC1020347322	・・COLLER	2	SN:B10001--
4	UC1700713621	・・SPRING	2	SN:B10001--
5	UC1090830283	・・BOLT	4	SN:B10001--
6	UC1090830219	・・BOLT	2	SN:B10001--
7	UC1026007057	・・PLUG (B8)	4	SN:B10001--
8	UC1701538797	・・PLUG (B8)	1	SN:B10001--
9	UC1300082002	・・O-RING	1	SN:B10001--
10	UC1300034003	・・O-RING	3	SN:B10001--
11	UC1300030001	・・O-RING	1	SN:B10001--

Ref. Y1610-13A0 Page 420130

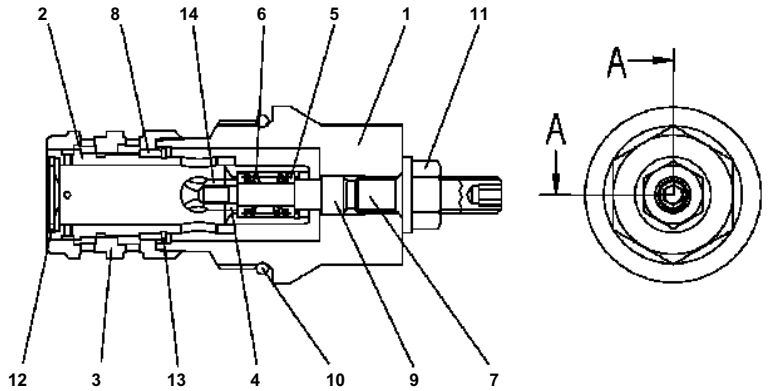

断 面
Section A-A

00002772

WA200-5 S/N B10001-UP

PUMP (14/14)

Item	Part No.	Description	Qty	Options
	(417-18-31101)	PUMP	1	SN:B10001--
	(★UC4720237588)	· DA CARTRIDGE ASS'Y	1	SN:B10001--
1	(★UC1704147211)	· · CASE	1	SN:B10001--
2	(★UC1720370752)	· · PLUNGER	1	SN:B10001--
3	(★UC1709221525)	· · BUSHING	1	SN:B10001--
4	(★UC1704213271)	· · DISTANCE PIECE	1	SN:B10001--
5	(★UC1720237554)	· · SPRING SEAT	2	SN:B10001--
6	(★UC1704086822)	· · SPRING	1	SN:B10001--
7	(★UC1720379108)	· · ROD	1	SN:B10001--
8	(★UC1706501543)	· · RING	1	SN:B10001--
9	(★UC1701564769)	· · WASHER	1	SN:B10001--
10	UC1300186003	· · O-RING	1	SN:B10001--
11	(★UC1701527072)	· · NUT	1	SN:B10001--
12	UC1302151009	· · WASHER	1	SN:B10001--
13	(★UC1701538476)	· WASHER	1	SN:B10001--
14	(★UC1701572879)	· NUT	1	SN:B10001--

Ref. Y1610-14A0 Page 420140

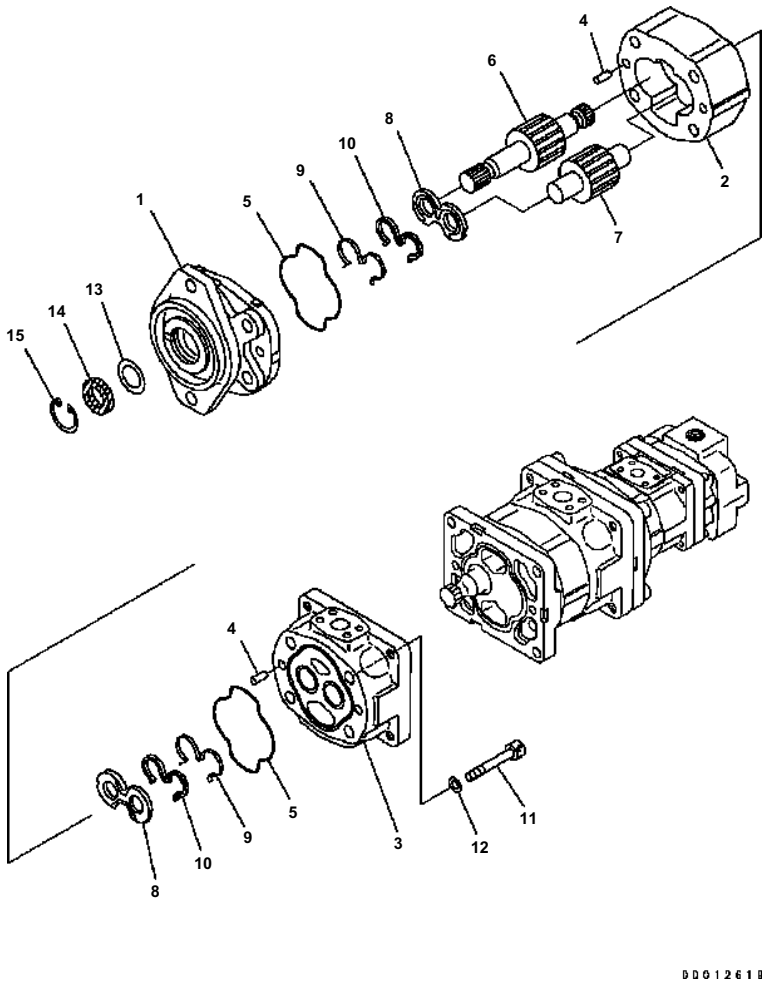

WA200-5 S/N B10001-UP

TORQUE CONVERTER AND P.P.C. PUMP (INNER PARTS) (1/4)

Item	Part No.	Description	Qty	Options
	705-56-26080	PUMP ASS'Y{(SAR50+32+SBR10+12)}	1	SN:B10001--
THIS ASSEMBLY CONSISTS OF ALL PARTS SHOWN IN FIGS.Y1610-31A0 TO Y1610-34A0.				
	705-22-34150	・ PUMP ASS'Y (SAR50)	1	SN:B10001--
1	(★705-18-02820)	・・ BRACKET ASS'Y	1	SN:B10001--
	(★705-17-02353)	・・・ BUSHING {PLANE}	2	SN:B10001--
2	(★705-17-34110)	・・ CASE {GEAR}	1	SN:B10001--
3	(★705-18-02240)	・・ CARRIER ASS'Y	1	SN:B10001--
	(★705-17-02353)	・・・ BUSHING {PLANE}	2	SN:B10001--
4	(★04020-01024)	・・ PIN {DOWEL}	4	SN:B10001--
5	(★705-17-02360)	・・ O-RING	2	SN:B10001--
6	(★705-17-34730)	・・ GEAR {DRIVE}	1	SN:B10001--
7	(★705-17-34511)	・・ GEAR {DRIVEN}	1	SN:B10001--
8	(★705-17-02612)	・・ PLATE {SIDE}	2	SN:B10001--
9	(★705-17-02430)	・・ RING {BACK-UP}	2	SN:B10001--
10	(★705-17-02460)	・・ RING {SEAL}	2	SN:B10001--
11	(★01253-61410)	・・ BOLT	4	SN:B10001--
12	(★705-17-04980)	・・ WASHER	4	SN:B10001--
13	705-17-02870	・・ PLATE	1	SN:B10001--
14	704-17-02830	・・ SEAL {OIL}	1	SN:B10001--
15	04065-04018	・・ RING {SNAP}	1	SN:B10001--

Ref. Y1610-31A0 Page 420150

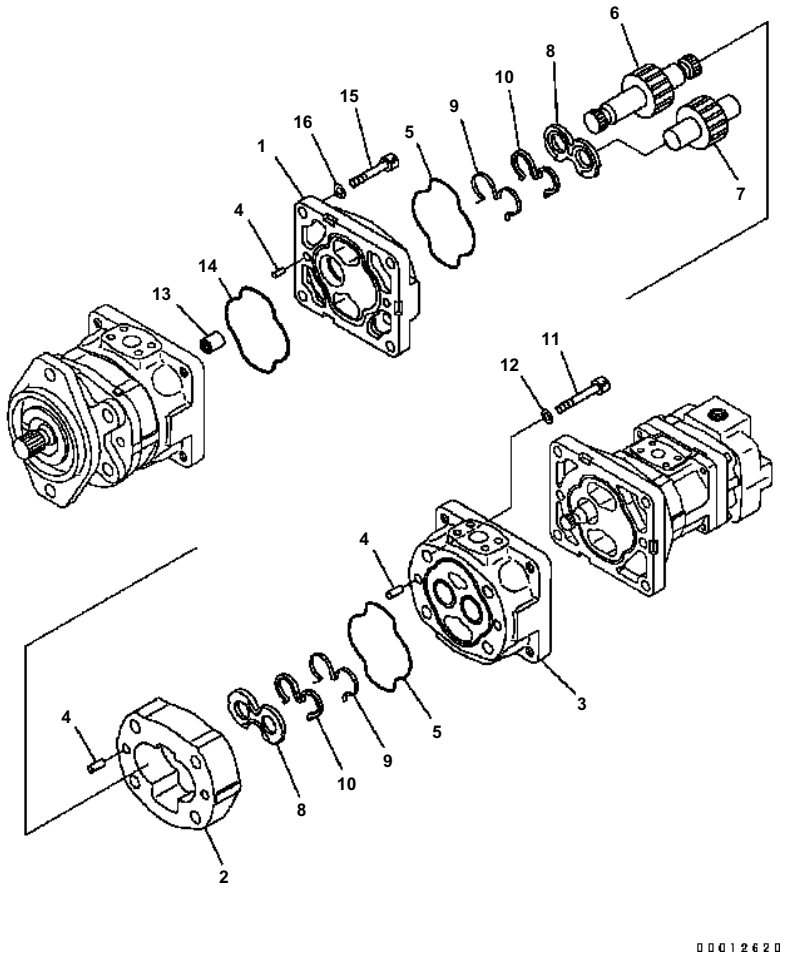

WA200-5 S/N B10001-UP

TORQUE CONVERTER AND P.P.C. PUMP (INNER PARTS) (2/4)

Item	Part No.	Description	Qty	Options
	(705-56-26080)	PUMP ASS'Y (SAR50+32+SBR10+12)	1	SN:B10001--
THIS ASSEMBLY CONSISTS OF ALL PARTS SHOWN IN FIGS.Y1610-31A0 TO Y1610-34A0.				
	705-22-30090	· PUMP ASS'Y (SAR40)	1	SN:B10001--
1	(★705-17-02521)	· · BRACKET ASS'Y	1	SN:B10001--
	(★705-17-02353)	· · · BUSHING {PLANE}	2	SN:B10001--
2	(★705-17-30012)	· · CASE {GEAR}	1	SN:B10001--
3	(★705-17-02221)	· · CARRIER ASS'Y	1	SN:B10001--
	(★705-17-02353)	· · · BUSHING {PLANE}	2	SN:B10001--
4	(★04020-01024)	· · PIN {DOWEL}	6	SN:B10001--
5	(★705-17-02360)	· · O-RING	2	SN:B10001--
6	(★705-19-30760)	· · GEAR {DRIVE}	1	SN:B10001--
7	(★705-17-30512)	· · GEAR {DRIVEN}	1	SN:B10001--
8	(★705-17-02612)	· · PLATE {SIDE}	2	SN:B10001--
9	(★705-17-02430)	· · RING {BACK-UP}	2	SN:B10001--
10	(★705-17-02460)	· · RING {RING}	2	SN:B10001--
11	(★01253-61200)	· · BOLT	4	SN:B10001--
12	(★01643-51232)	· · WASHER	4	SN:B10001--
13	705-17-02330	· COUPLING ASS'Y	1	SN:B10001--
14	705-17-02420	· O-RING	1	SN:B10001--
15	01252-61015	· BOLT	4	SN:B10001--
16	01643-51032	· WASHER	4	SN:B10001--

Ref. Y1610-32A0 Page 420160

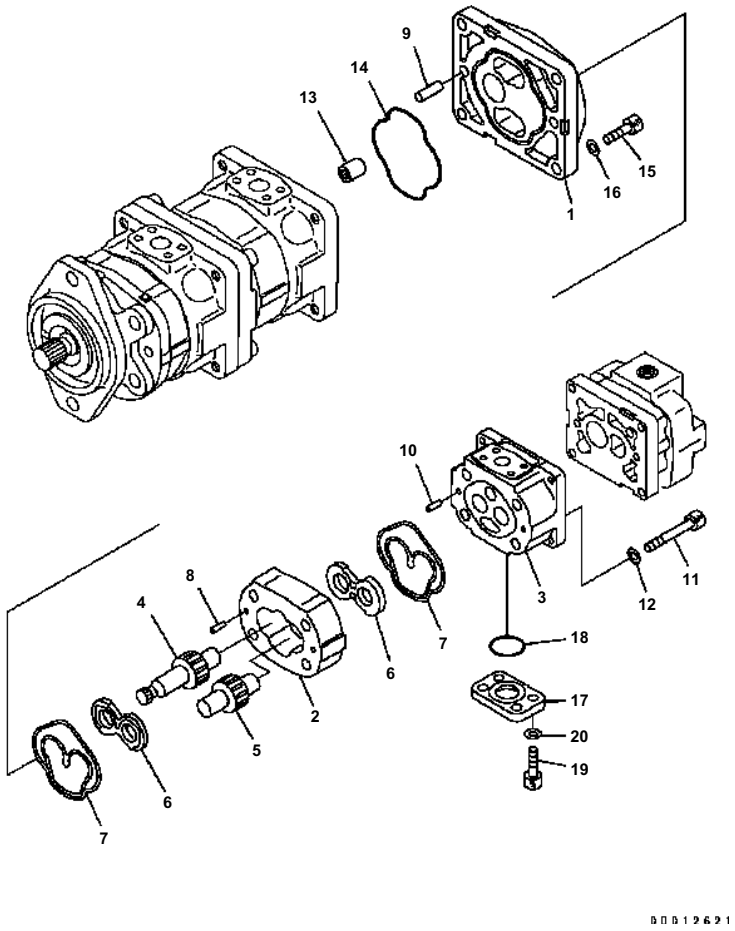

WA200-5 S/N B10001-UP

TORQUE CONVERTER AND P.P.C. PUMP (INNER PARTS) (3/4)

Item	Part No.	Description	Qty	Options
	(705-56-26080)	PUMP ASS'Y{(SAR50+32+SBR10+12)}	1	SN:B10001--
THIS ASSEMBLY CONSISTS OF ALL PARTS SHOWN IN FIGS.Y1610-31A0 TO Y1610-34A0.				
	705-41-04400	· PUMP ASS'Y (SBR10)	1	SN:B10001--
1	(★705-41-83010)	· · BRACKET	1	SN:B10001--
	(★705-40-80610)	· · · BUSHING {PLANE}	1	SN:B10001--
	(★705-40-80620)	· · · BUSHING {PLANE}	1	SN:B10001--
2	(★705-40-22011)	· · CASE {GEAR}	1	SN:B10001--
3	(★705-40-80311)	· · CARRIER	1	SN:B10001--
	(★705-40-80610)	· · · BUSHING {PLANE}	1	SN:B10001--
	(★705-40-80620)	· · · BUSHING {PLANE}	1	SN:B10001--
4	(★705-40-22540)	· · GEAR {DRIVE}	1	SN:B10001--
5	(★705-40-22511)	· · GEAR {DRIVEN}	1	SN:B10001--
6	(★705-40-83720)	· · PLATE {SIDE}	2	SN:B10001--
7	(★705-40-80770)	· · SEAL {OIL}	2	SN:B10001--
8	(★04020-00820)	· · PIN {DOWEL}	4	SN:B10001--
9	(★04020-01024)	· · PIN {DOWEL}	2	SN:B10001--
10	(★705-67-01230)	· · PIN {DOWEL}	2	SN:B10001--
11	(★01252-61270)	· · BOLT	4	SN:B10001--
12	(★01643-51232)	· · WASHER	4	SN:B10001--
13	705-67-01330	· COUPLING ASS'Y	1	SN:B10001--
14	705-17-02420	· O-RING	1	SN:B10001--
15	01252-61035	· BOLT	4	SN:B10001--
16	01643-51032	· WASHER	4	SN:B10001--
17	705-40-80941	· PLATE	1	SN:B10001--
18	07000-E2021	· O-RING	1	SN:B10001--
19	01252-70825	· BOLT	4	SN:B10001--
20	01643-50823	· WASHER	4	SN:B10001--

Ref. Y1610-33A0 Page 420170

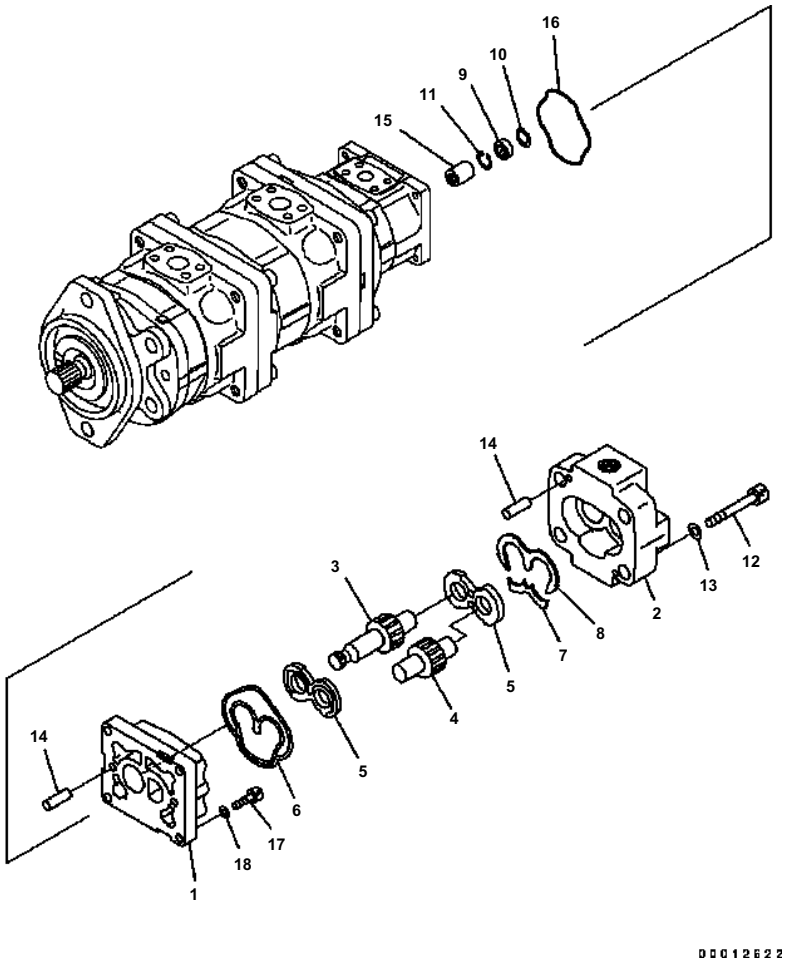

WA200-5 S/N B10001-UP

TORQUE CONVERTER AND P.P.C. PUMP (INNER PARTS) (4/4)

Item	Part No.	Description	Qty	Options
	(705-56-26080)	PUMP ASS'Y (SAR50+32+SBR10+12)	1	SN:B10001--
THIS ASSEMBLY CONSISTS OF ALL PARTS SHOWN IN FIGS.Y1610-31A0 TO Y1610-34A0.				
	705-41-05690	· PUMP ASS'Y (SBR12)	1	SN:B10001--
1	(★705-41-83510)	· · BRACKET	1	SN:B10001--
	(★705-40-83630)	· · · BUSHING {PLANE (DRIVE SIDE)}	1	SN:B10001--
	(★705-40-83640)	· · · BUSHING {PLANE (DRIVEN SIDE)}	1	SN:B10001--
2	(★705-40-24E70)	· · COVER	1	SN:B10001--
	(★705-40-83640)	· · · BUSHING {PLANE (DRIVE SIDE)}	1	SN:B10001--
	(★705-40-83630)	· · · BUSHING {PLANE (DRIVEN SIDE)}	1	SN:B10001--
3	(★705-40-24L50)	· · GEAR {DRIVE}	1	SN:B10001--
4	(★705-40-24H10)	· · GEAR {DRIVEN}	1	SN:B10001--
5	(★705-40-83720)	· · PLATE {SIDE}	2	SN:B10001--
6	(★705-40-80770)	· · SEAL {RING}	1	SN:B10001--
7	(★705-40-80880)	· · PLATE	1	SN:B10001--
8	(★705-40-83760)	· · SEAL	1	SN:B10001--
9	705-40-81820	· · SEAL {OIL}	1	SN:B10001--
10	705-40-81870	· · PLATE	1	SN:B10001--
11	04065-03012	· · RING {SNAP}	1	SN:B10001--
12	01252-71055	· · BOLT	4	SN:B10001--
13	01643-51032	· · WASHER	4	SN:B10001--
14	04020-00514	· · PIN {DOWEL}	4	SN:B10001--
15	705-67-01330	· COUPLING ASS'Y	1	SN:B10001--
16	705-40-80670	· SEAL	1	SN:B10001--
17	01252-70830	· BOLT	4	SN:B10001--
18	01643-50823	· WASHER	4	SN:B10001--

Ref. Y1610-34A0 Page 420180

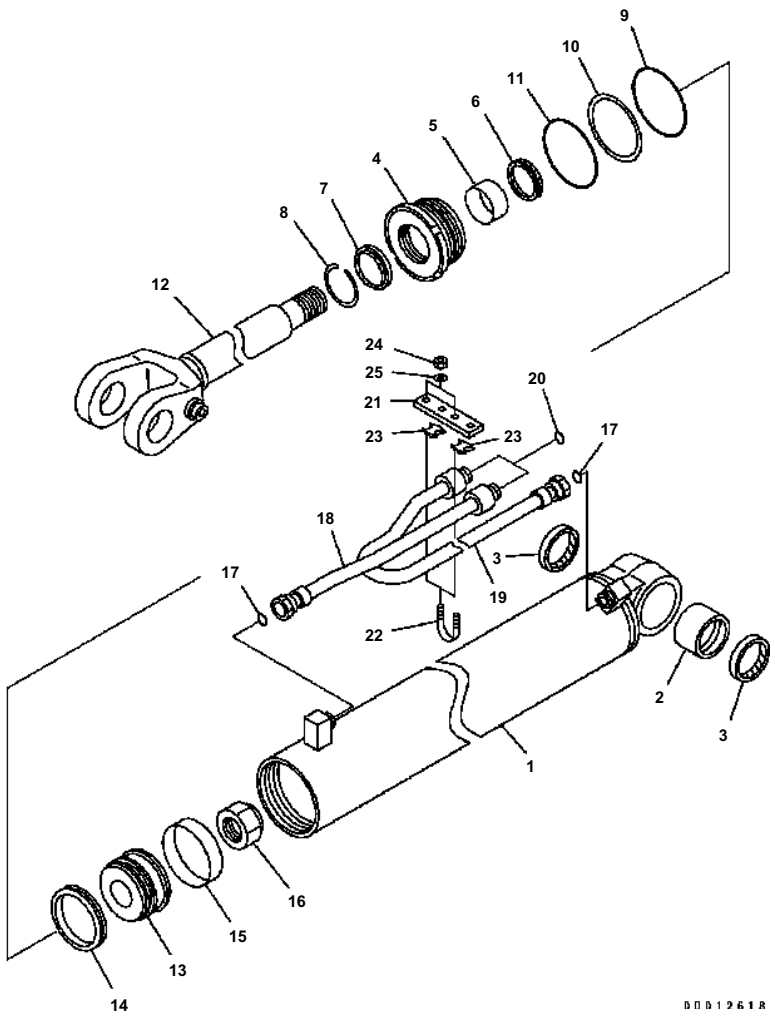

WA200-5 S/N B10001-UP

BOOM CYLINDER (INNER PARTS)

Item	Part No.	Description	Qty	Options
	(⊙707-00-XZ730)	CYLINDER ASS'Y {L.H. (FINAL COATING)}	1	SN:B10001--
	(⊙707-00-XE720)	CYLINDER GROUP {L.H.}	1	SN:B10001--
	(⊙707-00-XZ740)	CYLINDER ASS'Y {R.H. (FINAL COATING)}	1	SN:B10001--
	(⊙707-00-XE730)	CYLINDER GROUP {R.H.}	1	SN:B10001--
	707-00-0E720	CYLINDER ASS'Y {L.H.}	1	SN:B10001--
	707-00-0E730	CYLINDER ASS'Y {R.H.}	1	SN:B10001--
1	721-11-12820	· CYLINDER {L.H.}	1	SN:B10001--
	721-11-12830	· CYLINDER {R.H.}	1	SN:B10001--
2	707-76-65580	· BUSHING	1	SN:B10001--
3	417-09-11120	· SEAL {DUST}	2	SN:B10001--
4	707-29-12380	· HEAD {CYLINDER}	1	SN:B10001--
5	707-52-10660	· BUSHING	1	SN:B10001--
6	707-51-65030	· PACKING {ROD} (KIT)	1	SN:B10001--
7	144-63-92170	· SEAL {DUST} (KIT)	1	SN:B10001--
8	07179-12079	· RING {SNAP}	1	SN:B10001--
9	07000-12115	· O-RING (KIT)	1	SN:B10001--
10	07146-02116	· RING {BACK-UP} (KIT)	1	SN:B10001--
11	07000-12120	· O-RING (KIT)	1	SN:B10001--
12	707-59-65070	· ROD {PISTON}	1	SN:B10001--
13	707-36-12130	· PISTON	1	SN:B10001--
14	707-44-12180	· RING {PISTON} (KIT)	1	SN:B10001--
15	07156-01215	· RING {WEAR} (KIT)	1	SN:B10001--
16	707-67-45010	· NUT {NYLON}	1	SN:B10001--
17	02896-11015	· O-RING (KIT)	2	SN:B10001--
18	707-86-47620	TUBE {L.H.}	1	SN:B10001--
	707-86-47650	TUBE {R.H.}	1	SN:B10001--
19	707-86-47630	TUBE {L.H.}	1	SN:B10001--
	707-86-47640	TUBE {R.H.}	1	SN:B10001--
20	02896-11015	O-RING (KIT)	2	SN:B10001--
21	707-88-86550	PLATE	1	SN:B10001--
22	07283-32244	CLIP	2	SN:B10001--
23	07283-52232	SEAT	2	SN:B10001--
24	01597-01009	NUT	4	SN:B10001--
25	01643-31032	WASHER	4	SN:B10001--
	GSERVICEKIT	SERVICE KIT		
KIT	707-98-42150	SERVICE KIT {LIFT CYLINDER}	2	SN:B10001--

Ref. Y1620-01A0 Page 420190

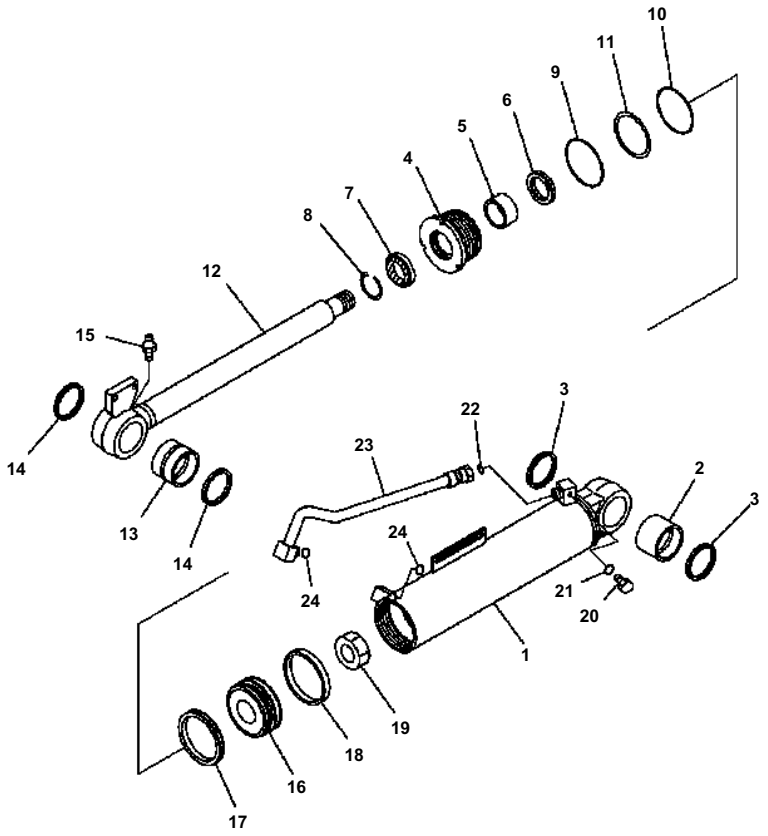

WA200-5 S/N B10001-UP

BUCKET CYLINDER (INNER PARTS)

Item	Part No.	Description	Qty	Options
	707-00-XZ750	CYLINDER ASS'Y	1	SN:B10001--
	707-00-0E740	CYLINDER ASS'Y	1	SN:B10001--
1	707-11-13540	· CYLINDER	1	SN:B10001--
2	707-76-70720	· BUSHING	1	SN:B10001--
3	418-09-11110	· SEAL {DUST} (KIT)	2	SN:B10001--
4	707-29-13240	· HEAD {CYLINDER}	1	SN:B10001--
5	707-52-10660	· BUSHING	1	SN:B10001--
6	707-51-65030	· PACKING {ROD} (KIT)	1	SN:B10001--
7	144-63-92170	· SEAL {DUST} (KIT)	1	SN:B10001--
8	07179-12079	· RING {SNAP}	1	SN:B10001--
9	07000-12130	· O-RING (KIT)	1	SN:B10001--
10	07000-12125	· O-RING (KIT)	1	SN:B10001--
11	07146-02126	· RING {BACK-UP} (KIT)	1	SN:B10001--
12	418-63-33121	· ROD {PISTON}	1	SN:B10001--
13	418-63-33140	· BUSHING	1	SN:B10001--
14	418-09-11110	· SEAL {DUST} (KIT)	2	SN:B10001--
15	07020-00000	· FITTING {GREASE}	1	SN:B10001--
16	707-36-13130	· PISTON	1	SN:B10001--
17	707-44-13180	· RING {PISTON} (KIT)	1	SN:B10001--
18	07156-01315	· RING {WEAR} (KIT)	1	SN:B10001--
19	707-67-48010	· NUT	1	SN:B10001--
20	07040-11007	· PLUG	1	SN:B10001--
21	07002-11023	· O-RING (KIT)	1	SN:B10001--
22	02896-11018	O-RING (KIT)	1	SN:B10001--
23	707-86-66960	TUBE	1	SN:B10001--
24	02896-11018	O-RING (KIT)	2	SN:B10001--
	GSERVICEKIT	SERVICE KIT		
K	707-98-42540	SERVICE KIT	1	SN:B10001--

Ref. Y1620-11A0 Page 420200

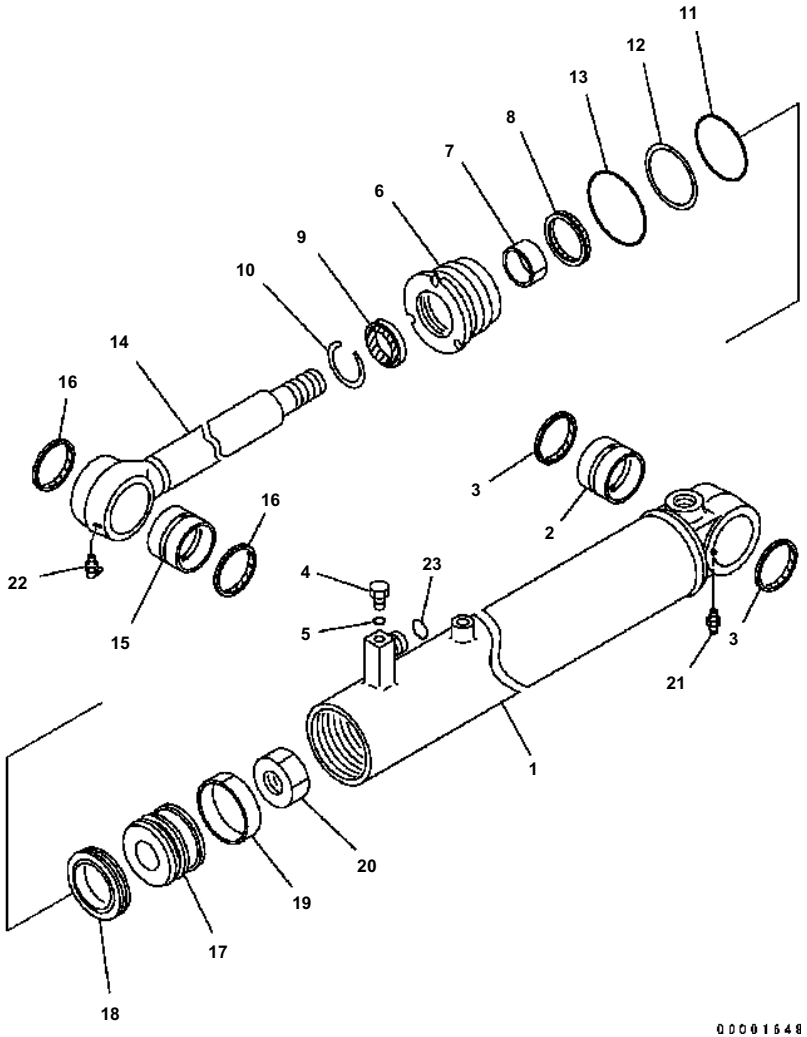

WA200-5 S/N B10001-UP

STEERING CYLINDER (INNER PARTS)

Item	Part No.	Description	Qty	Options
	707-00-07H80	CYLINDER ASS'Y {(FINAL COATING)}	2	SN:B10001--
	707-00-0C190	CYLINDER ASS'Y	2	SN:B10001--
1	707-11-70100	· CYLINDER	1	SN:B10001--
2	707-76-40020	· BUSHING	1	SN:B10001--
3	419-09-11120	· SEAL {DUST} (KIT)	2	SN:B10001--
4	07040-11007	· PLUG	1	SN:B10001--
5	07002-11023	· O-RING (KIT)	1	SN:B10001--
6	707-29-70730	· HEAD	1	SN:B10001--
7	07177-04025	· BUSHING	1	SN:B10001--
8	707-51-40030	· PACKING {ROD} (KIT)	1	SN:B10001--
9	198-63-75190	· SEAL {DUST} (KIT)	1	SN:B10001--
10	07179-12052	· RING {SNAP}	1	SN:B10001--
11	07000-12065	· O-RING (KIT)	1	SN:B10001--
12	07146-02066	· RING {BACK-UP} (KIT)	1	SN:B10001--
13	07000-12070	· O-RING (KIT)	1	SN:B10001--
14	707-58-40A60	· ROD {PISTON}	1	SN:B10001--
15	707-76-40020	· BUSHING	1	SN:B10001--
16	419-09-11120	· SEAL {DUST} (KIT)	2	SN:B10001--
17	707-36-70270	· PISTON	1	SN:B10001--
18	707-44-70110	· RING {PISTON} (KIT)	1	SN:B10001--
19	07156-00710	· RING {WEAR} (KIT)	1	SN:B10001--
20	707-67-30030	· NUT	1	SN:B10001--
21	07020-00000	· FITTING	1	SN:B10001--
22	07020-00675	· FITTING	1	SN:B10001--
23	02896-11012	· O-RING (KIT)	1	SN:B10001--
	GSERVICEKIT	SERVICE KIT		
K	707-99-14760	SERVICE KIT {STEERING CYLINDER}	2	SN:B10001--

Ref. Y1622-01A0 Page 420210

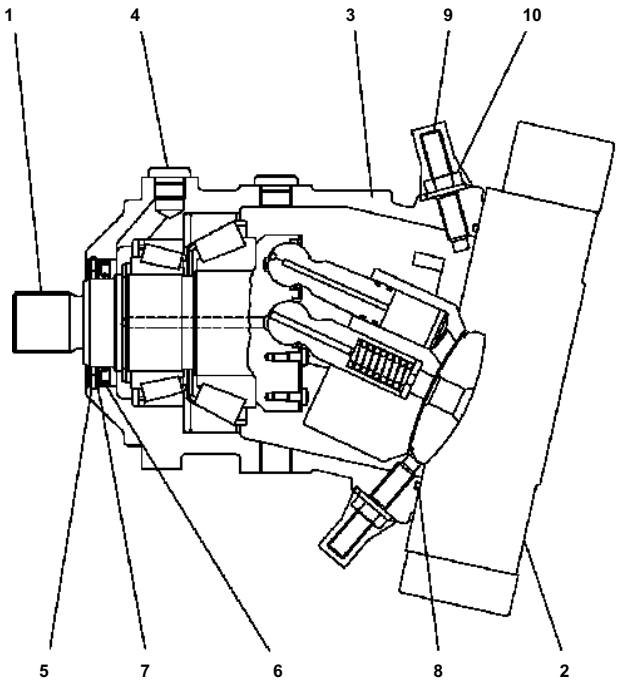

WA200-5 S/N B10001-UP

MOTOR (1/6)

Item	Part No.	Description	Qty	Options
	417-18-31201	MOTOR	1	SN:B10001--
1	(UC4706054228)	· ROTARY GROUP	1	SN:B10001--
2	(UC4020542239)	· CONTROL	1	SN:B10001--
3	(★UC1020675205)	· HOUSING	1	SN:B10001--
4	UC4100105483	· PLUG ASS'Y	1	SN:B10001--
5	UC1700834122	· WASHER	1	SN:B10001--
6	UC1708311782	· OIL SEAL	1	SN:B10001--
7	UC1700871882	· SHIM	1	SN:B10001--
8	UC1300521002	· O-RING	1	SN:B10001--
9	(★C4704468625)	· SCREW	2	SN:B10001--
10	(★UC1701524596)	· NUT	2	SN:B10001--

Ref. Y1651-01A0 Page 420220

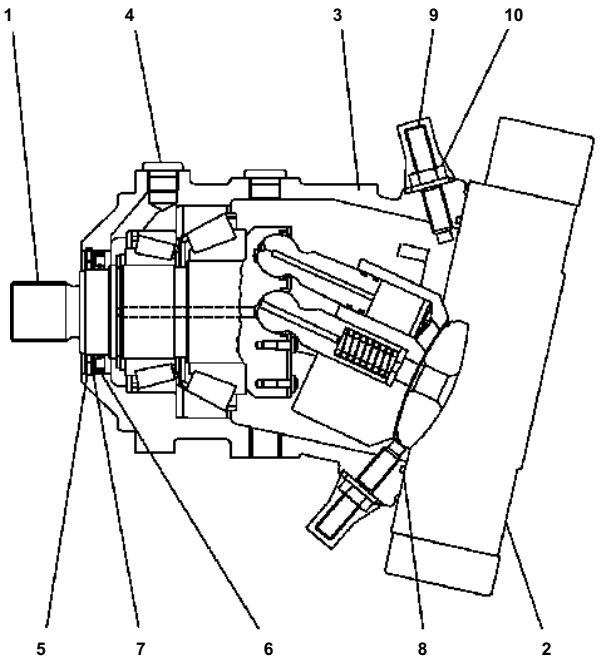

WA200-5 S/N B10001-UP

MOTOR (1/6)

Item	Part No.	Description	Qty	Options
	417-18-31301	MOTOR	1	SN:B10001--
1	(UC4706054228)	· ROTARY GROUP	1	SN:B10001--
2	(UC4020753311)	· CONTROL	1	SN:B10001--
3	(★UC1020675205)	· HOUSING	1	SN:B10001--
4	UC4100105483	· PLUG ASS'Y	1	SN:B10001--
5	UC1700834122	· WASHER	1	SN:B10001--
6	UC1708311782	· OIL SEAL	1	SN:B10001--
7	UC1700871882	· SHIM	1	SN:B10001--
8	UC1300521002	· O-RING	1	SN:B10001--
9	(★UC4704468625)	· SCREW	2	SN:B10001--
10	(★UC1701524596)	· NUT	2	SN:B10001--

Ref. Y1651-01A1 Page 420230

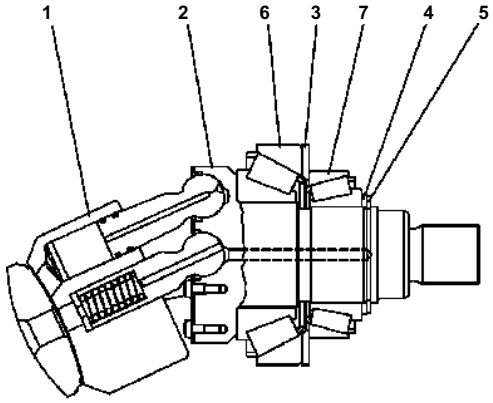

00002774

WA200-5 S/N B10001-UP

MOTOR (2/6)

Item	Part No.	Description	Qty	Options
	UC4706054228	ROTARY GROUP	1	SN:B10001--
1	(★UC4706037791)	· CYLINDER BLOCK	1	SN:B10001--
2	(★UC1706505022)	· SHAFT	1	SN:B10001--
3	(★UC1706514979)	· DISTANCE PIECE	1	SN:B10001--
	(★UC1706515157)	· DISTANCE PIECE	1	SN:B10001--
	(★UC1706515166)	· DISTANCE PIECE	1	SN:B10001--
	(★UC1706515175)	· DISTANCE PIECE	1	SN:B10001--
	(★UC1706515184)	· DISTANCE PIECE	1	SN:B10001--
4	(★UC1709214884)	· SHIM	1	SN:B10001--
	(★UC1709214893)	· SHIM	1	SN:B10001--
	(★UC1709214903)	· SHIM	1	SN:B10001--
	(★UC1709214912)	· SHIM	1	SN:B10001--
	(★UC1709214921)	· SHIM	1	SN:B10001--
	(★UC1709214939)	· SHIM	1	SN:B10001--
	(★UC1709214949)	· SHIM	1	SN:B10001--
	(★UC1709214958)	· SHIM	1	SN:B10001--
5	(★UC1700833651)	· WASHER	1	SN:B10001--
6	(★UC1701543827)	· BEARING	1	SN:B10001--
7	(★UC1701542934)	· BEARING	1	SN:B10001--

Ref. Y1651-02A0 Page 420240

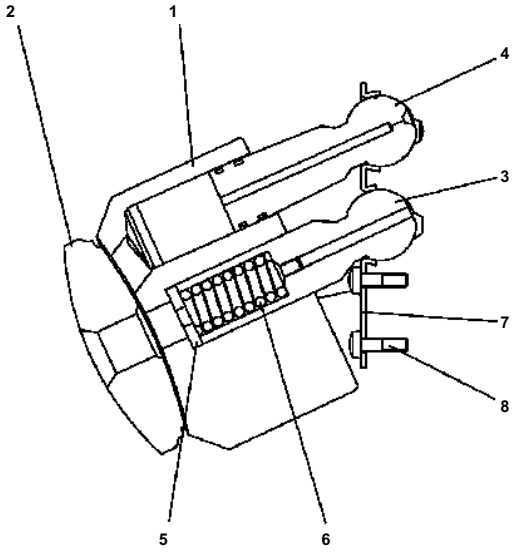

GD014430

WA200-5 S/N B10001-UP

MOTOR (3/6)

Item	Part No.	Description	Qty	Options
	UC4706037791	CYLINDER BLOCK	1	SN:B10001--
1	(★UC1720068844)	· CYLINDER BLOCK	1	SN:B10001--
2	(★UC1709217874)	· PLATE	1	SN:B10001--
3	(★UC1709215089)	· PIN {CENTER}	1	SN:B10001--
4	UC4720219021	· PISTON ASS'Y	1	SN:B10001--
5	(★UC1100590857)	· SHIM	1	SN:B10001--
	(★UC1100590866)	· SHIM	1	SN:B10001--
	(★UC1709215263)	· SHIM	1	SN:B10001--
	(★UC1020273331)	· SHIM	1	SN:B10001--
	(★UC1020273322)	· SHIM	1	SN:B10001--
	(★UC1020273313)	· SHIM	1	SN:B10001--
	(★UC1020273304)	· SHIM	1	SN:B10001--
	(★UC1020273294)	· SHIM	1	SN:B10001--
6	(★UC1709215079)	· SPRING	1	SN:B10001--
7	UC1700628477	· PLATE	1	SN:B10001--
8	UC1704492355	· SCREW	14	SN:B10001--

Ref. Y1651-03A0 Page 420250

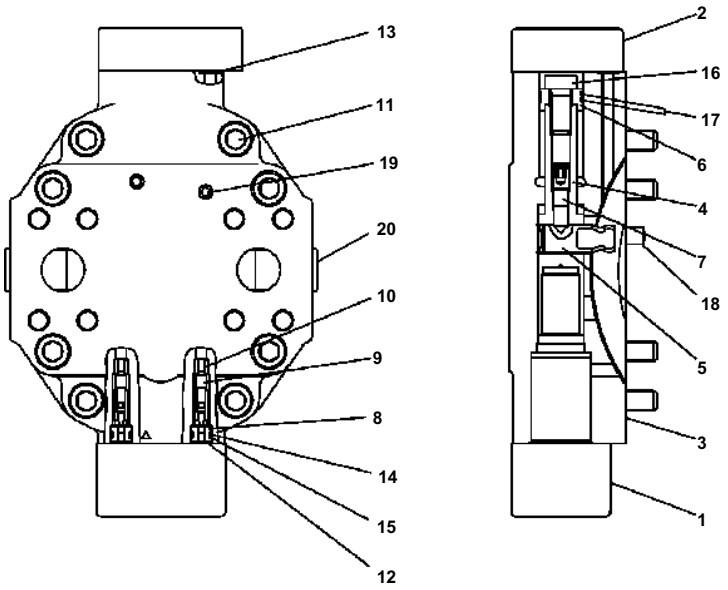

00D02776

WA200-5 S/N B10001-UP

MOTOR (4/6)

Item	Part No.	Description	Qty	Options
	UC4020542239	CONTROL	1	SN:B10001--
1	(UC4020572314)	· CONTROL ASS'Y	1	SN:B10001--
2	(UC4706037232)	· COVER	1	SN:B10001--
3	(★UC1720001272)	· PLATE	1	SN:B10001--
4	(★UC1709214389)	· PISTON	1	SN:B10001--
5	UC1704229496	· ROD	1	SN:B10001--
6	UC1706522018	· BARREL	1	SN:B10001--
7	UC1704449699	· SCREW{HEXAGON}	1	SN:B10001--
8	UC1020753442	· GUIDE	2	SN:B10001--
9	UC1704266624	· POPPET	2	SN:B10001--
10	UC1704127565	· SEAT {VALVE}	2	SN:B10001--
11	UC1301608009	· BOLT {HEXAGON}	8	SN:B10001--
12	UC1300020004	· O-RING	2	SN:B10001--
13	UC1300028008	· O-RING	6	SN:B10001--
14	UC1300032007	· O-RING	2	SN:B10001--
15	UC1026023224	· BACK-UP RING	2	SN:B10001--
16	UC1700832043	· BOLT	1	SN:B10001--
17	UC1708321431	· RING {PISTON}	3	SN:B10001--
18	UC1701526006	· PIN {PARALLEL}	2	SN:B10001--
19	UC1701538797	· PLUG	1	SN:B10001--
20	UC1701566518	· PLUG	2	SN:B10001--

Ref. Y1651-04A0 Page 420260

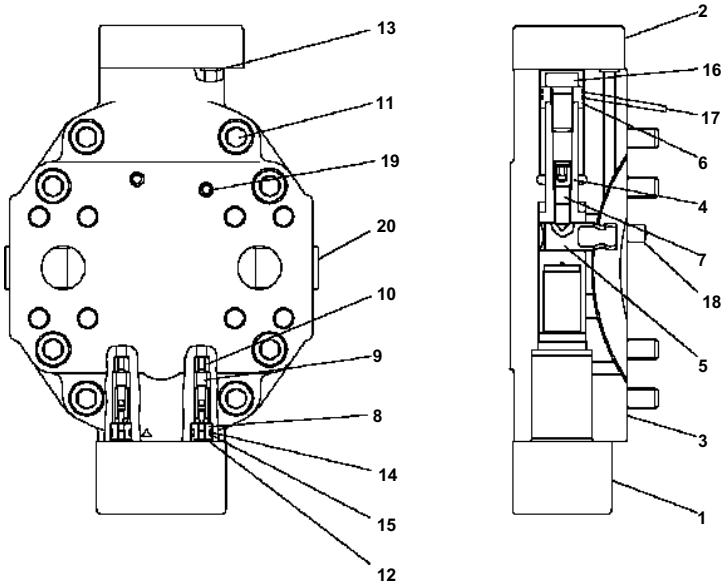

D000277E

WA200-5 S/N B10001-UP

MOTOR (4/6)

Item	Part No.	Description	Qty	Options
	UC4020753311	CONTROL	1	SN:B10001--
1	(UC4020753283)	· CONTROL ASS'Y	1	SN:B10001--
2	(UC4706037627)	· FLASHING VALVE	1	SN:B10001--
3	(★UC1720001272)	· PLATE	1	SN:B10001--
4	(★UC1709214389)	· PISTON	1	SN:B10001--
5	UC1704229496	· ROD	1	SN:B10001--
6	UC1706522018	· BARREL	1	SN:B10001--
7	UC1704449699	· SCREW {HEXAGON}	1	SN:B10001--
8	UC1020753442	· GUIDE {VALVE}	2	SN:B10001--
9	UC1704266624	· POPPET	2	SN:B10001--
10	UC1704127565	· SEAT {VALVE}	2	SN:B10001--
11	UC1301608009	· BOLT {HEXAGON}	8	SN:B10001--
12	UC1300020004	· O-RING	2	SN:B10001--
13	UC1300028008	· O-RING	6	SN:B10001--
14	UC1300032007	· O-RING	2	SN:B10001--
15	UC1026023224	· BACK-UP RING	2	SN:B10001--
16	UC1700832043	· BOLT {HEXAGON}	1	SN:B10001--
17	UC1708321431	· RING {PISTON}	3	SN:B10001--
18	UC1701526006	· PIN {PARALLEL}	2	SN:B10001--
19	UC1701538797	· PLUG	1	SN:B10001--
20	UC1701566518	· PLUG	2	SN:B10001--

Ref. Y1651-04A1 Page 420270

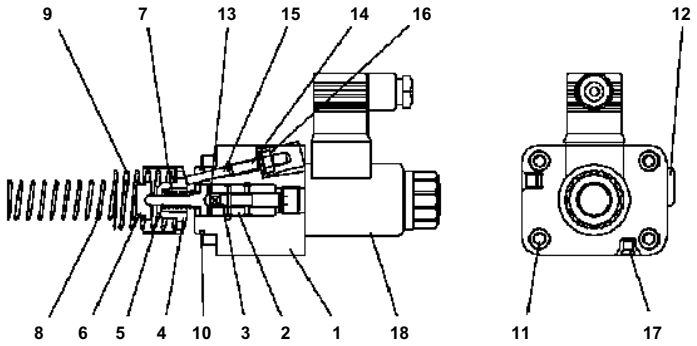

00014441

WA200-5 S/N B10001-UP

MOTOR (5/6)

Item	Part No.	Description	Qty	Options
	UC4020572314	CONTROL ASS'Y	1	SN:B10001--
1	(★UC1020389371)	· HOUSING	1	SN:B10001--
2	(★UC1704122469)	· BUSHING	1	SN:B10001--
3	(★UC1720367765)	· SPOOL	1	SN:B10001--
4	(★UC1706511182)	· SPRING	1	SN:B10001--
5	(★UC1709213515)	· SPRING	1	SN:B10001--
6	(★UC1704123169)	· SPRING	1	SN:B10001--
7	(★UC1709214215)	· SPRING	1	SN:B10001--
8	(★UC1704362685)	· SPRING	1	SN:B10001--
9	(★UC1706511164)	· SPRING	1	SN:B10001--
10	(★UC1300083005)	· O-RING	1	SN:B10001--
11	UC1301544006	· BOLT {HEXAGON}	4	SN:B10001--
12	(★UC1701539305)	· PLUG	1	SN:B10001--
13	(★UC1700833817)	· WASHER	1	SN:B10001--
14	(★UC1302086116)	· SCREW {HEXAGON}	1	SN:B10001--
15	(★UC1700877569)	· PIN	1	SN:B10001--
16	(★UC1701524257)	· NUT {HEXAGON}	1	SN:B10001--
17	(★UC1701538687)	· PLUG	2	SN:B10001--
18	(★UC1026017421)	· SOLENOID	1	SN:B10001--

Ref. Y1651-05A0 Page 420280

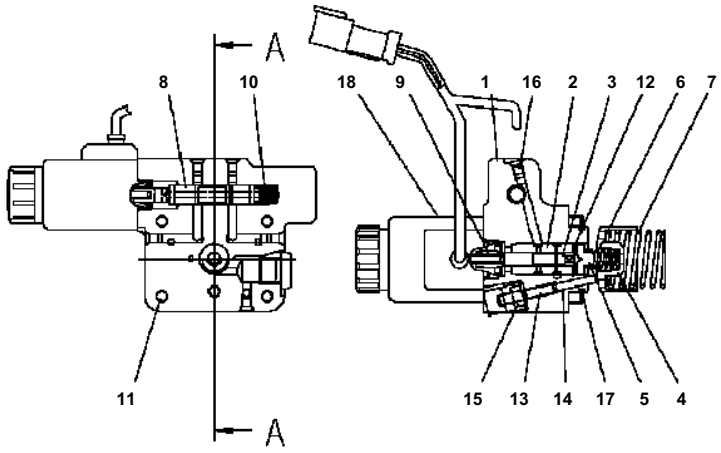

Section A-A

D0014445

WA200-5 S/N B10001-UP

MOTOR (5/6)

Item	Part No.	Description	Qty	Options
	UC4020753283	CONTROL ASS'Y	1	SN:B10001--
1	(★UC1020772296)	· HOUSING {CONTROL}	1	SN:B10001--
2	(★UC1094326623)	· BUSHING {CONTROL}	1	SN:B10001--
3	(★UC1020069563)	· CONTROL PISTON	1	SN:B10001--
4	(★UC1706511182)	· SPRING	1	SN:B10001--
5	(★UC1709213395)	· SPRING	1	SN:B10001--
6	(★UC1709214196)	· SPRING	1	SN:B10001--
7	(★UC1706511164)	· SPRING	1	SN:B10001--
8	(★UC1020451292)	· CONTROL PISTON	1	SN:B10001--
9	(★UC1096501963)	· BUSHING	1	SN:B10001--
10	(★UC1020450648)	· SPRING	1	SN:B10001--
11	UC1301544006	· BOLT {HEXAGON}	4	SN:B10001--
12	(★UC1700833817)	· WASHER	1	SN:B10001--
13	(★UC1302086116)	· SCREW {HEXAGON}	1	SN:B10001--
14	(★UC1700877569)	· PIN {PARALLEL}	1	SN:B10001--
15	(★UC1701524257)	· NUT {HEXAGON}	1	SN:B10001--
16	(★UC1701538687)	· PLUG	5	SN:B10001--
17	UC1300083005	· O-RING	1	SN:B10001--
18	(★UC4020757708)	· SOLENOID	2	SN:B10001--

Ref. Y1651-05A1 Page 420290

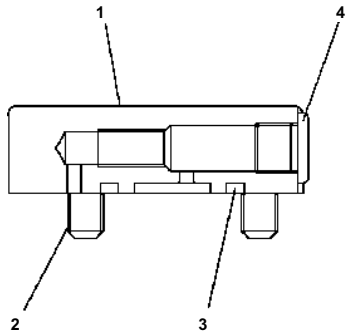

00002779

WA200-5 S/N B10001-UP

MOTOR (6/6)

Item	Part No.	Description	Qty	Options
	UC4706037232	COVER	1	SN:B10001--
1	UC1704459899	· COVER	1	SN:B10001--
2	UC1303012409	· BOLT {HEXAGON}	4	SN:B10001--
3	UC1300372002	· O-RING	1	SN:B10001--
4	UC1701539305	· PLUG	1	SN:B10001--

Ref. Y1651-06A0 Page 420300

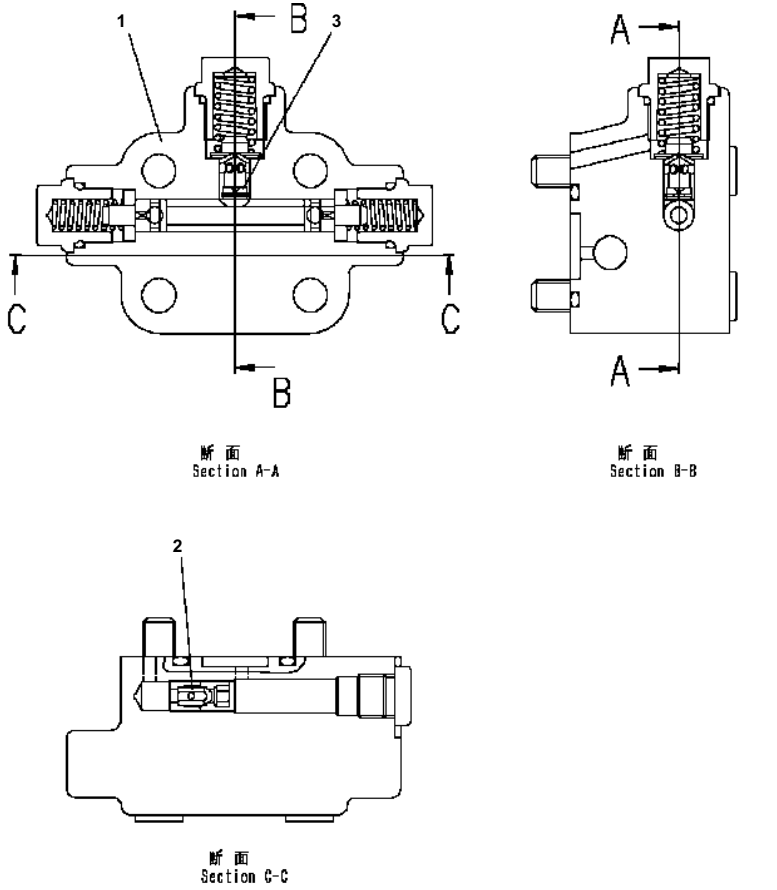

WA200-5 S/N B10001-UP

MOTOR (6/6) (WITH ORIFICE)

Item	Part No.	Description	Qty	Options
	UC4706037627	FLASHING VALVE	1	SN:B10001--
1	(UC4706138362)	· FLASHING VALVE	1	SN:B10001--
2	UC4704466252	· ORIFICE	1	SN:B10001--
3	UC4704475917	· ORIFICE	1	SN:B10001--

Ref. Y1651-06A1 Page 420310

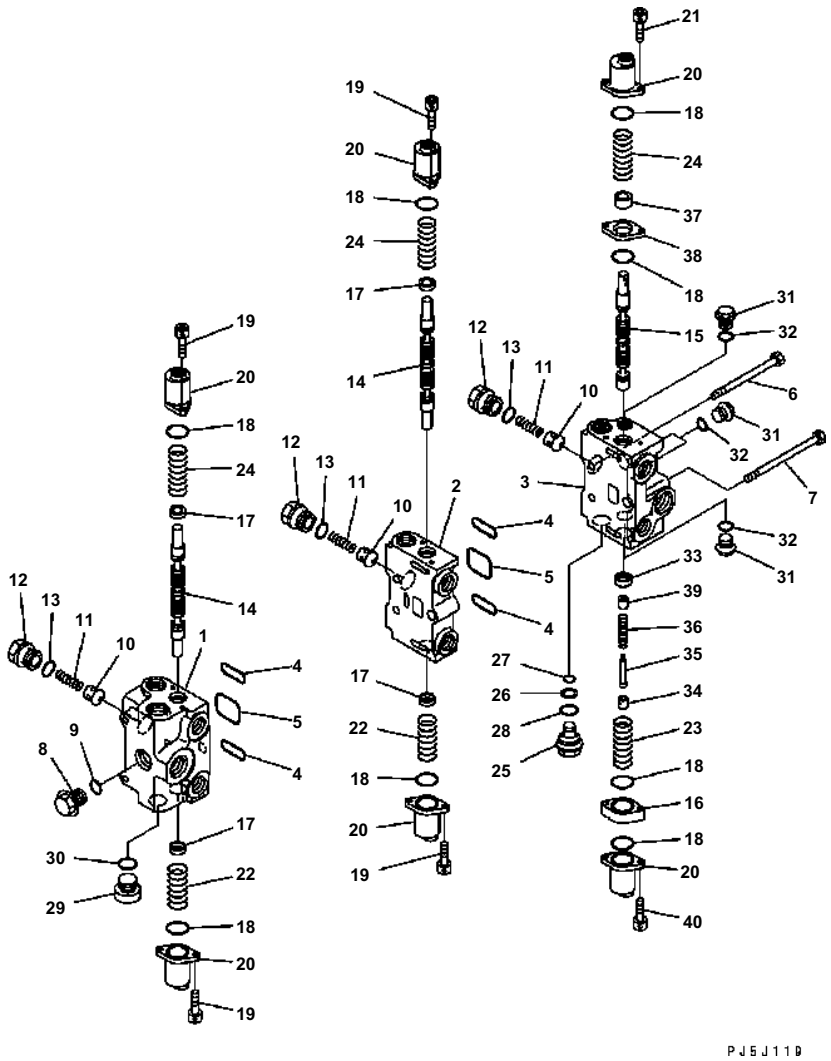

WA200-5 S/N B10001-UP

CONTROL VALVE (3-SPOOL) (1/2)

Item	Part No.	Description	Qty	Options
	709-82-12400	CONTROL VALVE	1	SN:B10226--
	709-83-12400	CONTROL VALVE	1	SN:B10001--B10225
THIS ASSEMBLY CONSISTS OF ALL PARTS SHOWN IN FIGS.Y1663-01A0 AND Y1663-02A0.				
	709-82-00260	· VALVE SUB ASS'Y	1	SN:B10226--
	709-83-00170	· VALVE SUB ASS'Y	1	SN:B10001--B10225
	709-83-10720	· · BODY SUB ASS'Y	1	SN:B10001--
1	☆	· · · BODY {VALVE}	1	SN:B10001--
2	☆	· · · BLOCK {VALVE}	1	SN:B10001--
3	☆	· · · COVER {VALVE}	1	SN:B10001--
4	07000-13038	· · · O-RING	4	SN:B10001--
5	07000-13050	· · · O-RING	2	SN:B10001--
6	700-83-11212	· · · BOLT	2	SN:B10001--
7	700-83-11510	· · · BOLT	1	SN:B10001--
8	700-22-11370	· · PLUG	1	SN:B10001--
9	07002-12434	· · O-RING	1	SN:B10001--
10	700-42-31460	· · VALVE	3	SN:B10001--
11	700-90-51320	· · SPRING	3	SN:B10001--
12	700-84-11320	· · PLUG	3	SN:B10001--
13	07002-13034	· · O-RING	3	SN:B10001--
14	☆	· · SPOOL	2	SN:B10001--
15	☆	· · SPOOL	1	SN:B10001--
16	700-85-11310	· · PLATE	1	SN:B10001--
17	700-84-13781	· · RETAINER	4	SN:B10001--
18	700-84-11240	· · O-RING	8	SN:B10001--
19	01252-60616	· · BOLT	8	SN:B10001--
20	700-84-12510	· · CASE	6	SN:B10001--
21	01252-60625	· · BOLT	2	SN:B10001--
22	700-85-11320	· · SPRING	2	SN:B10001--
23	700-85-11430	· · SPRING	1	SN:B10001--
24	700-85-11440	· · SPRING	3	SN:B10001--
25	700-84-13960	· · PLUG	1	SN:B10001--
26	700-80-64220	· · RING	1	SN:B10001--
27	700-22-11410	· · O-RING	1	SN:B10001--
28	07002-13034	· · O-RING	1	SN:B10001--
29	07040-13316	· · PLUG	1	SN:B10001--
30	07002-13334	· · O-RING	1	SN:B10001--
31	709-30-62150	· · PLUG	4	SN:B10001--
32	07002-12034	· · O-RING	4	SN:B10001--
33	700-85-11350	· · RETAINER	1	SN:B10001--

Ref. Y1663-01A0 Page 420320

WA200-5 S/N B10001-UP

CONTROL VALVE (3-SPOOL) (1/2)

Item	Part No.	Description	Qty	Options
34	700-85-11360	・・ RETAINER	1	SN:B10001--
35	700-85-11370	・・ BOLT	1	SN:B10001--
36	700-85-11450	・・ SPRING	1	SN:B10001--
37	700-85-11390	・・ RETAINER	1	SN:B10001--
38	700-85-11410	・・ PLATE	1	SN:B10001--
39	700-85-11420	・・ RETAINER	1	SN:B10001--
40	01252-60635	・・ BOLT	2	SN:B10001--

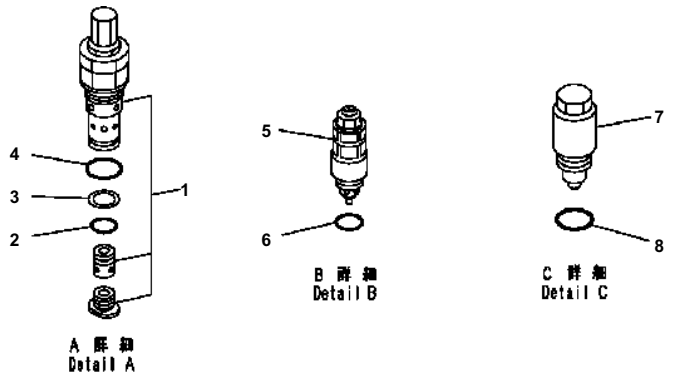

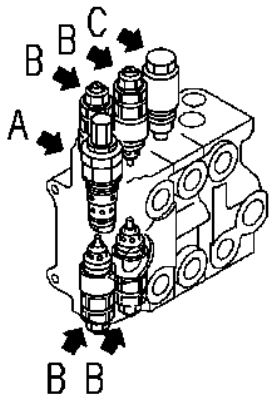

00015355

WA200-5 S/N B10001-UP

CONTROL VALVE (3-SPOOL) (2/2)

Item	Part No.	Description	Qty	Options
	(709-82-12400)	CONTROL VALVE	1	SN:B10226--
	(709-83-12400)	CONTROL VALVE	1	SN:B10001--B10225
THIS ASSEMBLY CONSISTS OF ALL PARTS SHOWN IN FIGS.Y1663-01A0 AND Y1663-02A0.				
1	700-89-64001	・VALVE ASS'Y {RELIEF}	1	SN:B10001--
2	07000-F2022	・・O-RING	1	SN:B10001--
3	700-80-51190	・・RING	1	SN:B10001--
4	07002-13334	・・O-RING	1	SN:B10001--
5	709-70-79300	・VALVE ASS'Y {SUCTION AND SAFETY}	4	SN:B10001--
6	07000-13024	・・O-RING	1	SN:B10001--
7	700-85-61000	・VALVE ASS'Y {SUCTION}	1	SN:B10001--
8	07002-13034	・・O-RING	1	SN:B10001--

Ref. Y1663-02A0 Page 420330

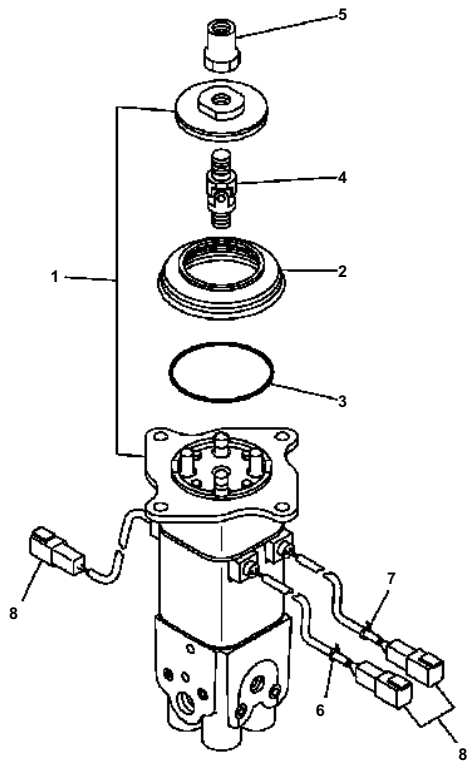

00015196

WA200-5 S/N B10001-UP

PPC VALVE (FOR MONO LEVER)

Item	Part No.	Description	Qty	Options
1	702-16-03661	PILOT VALVE	1	SN:B10001--
2	702-16-58820	· BOOT	1	SN:B10001--
3	07000-02070	· O-RING	1	SN:B10001--
4	702-16-51240	· JOINT {UNIVERSAL}	1	SN:B10001--
5	702-16-53230	· NUT	1	SN:B10001--
6	08034-00310	· BAND	1	SN:B10001--
7	08034-20310	· BAND	1	SN:B10001--
8	08192-12810	· CONNECTOR	3	SN:B10001--

Ref. Y1670-01A0 Page 420340

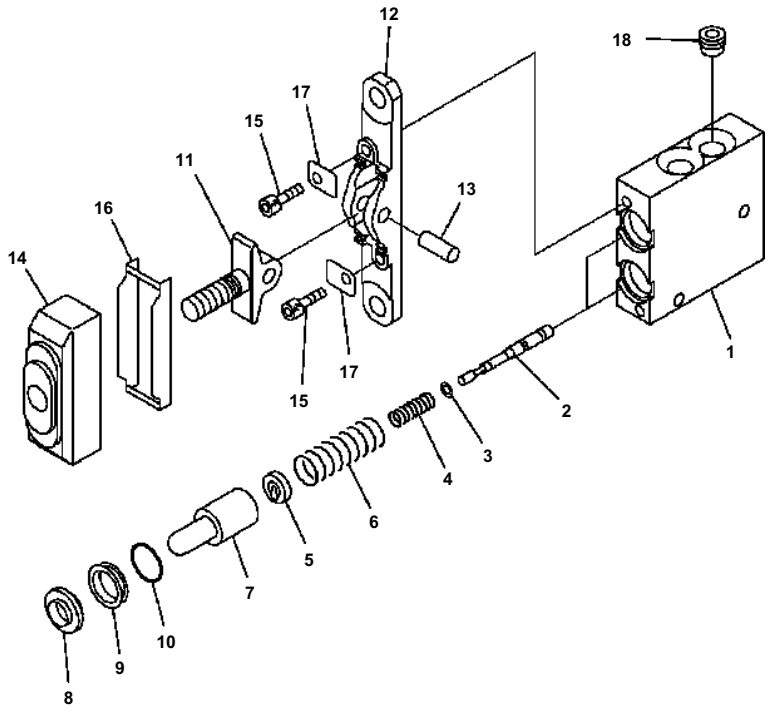

WA200-5 S/N B10001-UP

PPC VALVE (FOR MONO + 1-ATTACHMENT LEVER)

Item	Part No.	Description	Qty	Options
	702-16-03370	PILOT VALVE	1	SN:B10001--
1	☆	· BODY {VALVE}	1	SN:B10001--
2	☆	· VALVE	2	SN:B10001--
3	☆	· SHIM¤ 0.30MM	2	SN:B10001--
	☆	· SHIM¤ 0.20MM	4	SN:B10001--
4	☆	· SPRING	2	SN:B10001--
5	☆	· RETAINER	2	SN:B10001--
6	☆	· SPRING	2	SN:B10001--
7	702-16-53170	· PISTON	2	SN:B10001--
8	702-16-57430	· SEAL	2	SN:B10001--
9	702-16-54580	· COLLAR	2	SN:B10001--
10	702-16-54590	· O-RING	2	SN:B10001--
11	☆	· LEVER	1	SN:B10001--
12	☆	· PLATE	1	SN:B10001--
13	☆	· SHAFT	1	SN:B10001--
14	702-16-54641	· BOOT	1	SN:B10001--
15	01252-30625	· BOLT	2	SN:B10001--
16	702-16-54660	· PLATE	1	SN:B10001--
17	702-16-54650	· PLATE	2	SN:B10001--
18	702-16-54880	· FILTER	1	SN:B10001--

Ref. Y1670-01A2 Page 420350

NUMERICAL INDEX

PARTS Nº	FIG. Nº	INDEX	PAGE
01010-61225	F4400-53A0	13	150150
01010-61225	F4400-53A0	17	150150
01010-61230	F4400-53A0	10	150150
01010-61230	F4400-53A0	22	150150
01010-61230	F4500-53A0	10	150210
01010-61230	F4500-53A0	15	150210
01010-61235	F4400-52A0	16	150140
01010-61235	F4500-52A0	14	150200
01010-61240	F4400-52A0	25	150140
01010-61290	F4400-54A0	8	150160
01010-61290	F4500-54A0	8	150220
01010-61645	F4400-52A0	35	150140
01010-61645	F4500-52A0	25	150200
01010-61680	F2420-54A0	6	150060
01010-61680	F2420-54A0A	6	150061
01010-61695	F2420-52A0	16	150040
01010-61695	F4400-52A0	34	150140
01010-61695	F4500-52A0	24	150200
01010-80610	E0201-01A0	12	120051
01010-80610	K0210-22A5	10	240310
01010-80612	B0110-02A0	14	030040
01010-80612	E0300-01A0	32	120110
01010-80612	K0210-15A0	9	240220
01010-80612	K0210-20A5	18	240280
01010-80612	K0210-20A9	19	240290
01010-80612	K0210-22A5	18	240310
01010-80612	K0210-22A5	23	240310
01010-80612	K0210-54A5	25	240580
01010-80612	K0210-54A6	7	240590
01010-80614	K0210-32A5	20	240430
01010-80614	K0210-32A6	33	240440
01010-80616	B0110-02A0	23	030040
01010-80616	E0202-02A0	15	120070
01010-80616	K0210-02A0	12	240050
01010-80616	K0210-02A0	19	240050
01010-80616	K0210-06A5	12	240100
01010-80616	K0210-06A5	28	240100
01010-80616	K0210-23A0	2	240320
01010-80616	K0210-23A0	6	240320
01010-80616	K0210-27A0	16	240380
01010-80616	K0210-32A5	12	240430
01010-80616	K0210-32A6	18	240440
01010-80616	K0210-32A6	31	240440
01010-80616	K0210-32A6	39	240440
01010-80616	K0210-54A5	4	240580
01010-80616	K0210-55A5A	36	240600
01010-80616	K0210-56A5A	23	240610
01010-80616	K0210-59A0	14	240640
01010-80616	K0210-59A0	6	240640
01010-80616	K0210-59A5	14	240650

PARTS Nº	FIG. Nº	INDEX	PAGE
01010-80616	K0210-59A5	6	240650
01010-80616	M4410-01A2	10	270170
01010-80620	K0210-09A0	21	240140
01010-80620	K0210-16A9	3	240240
01010-80620	K0210-26A2	14	240360
01010-80620	K0210-26A9	14	240370
01010-80620	K0210-26B0	14	240371
01010-80620	K0210-55A5A	37	240600
01010-80620	K0210-56A5A	24	240610
01010-80625	K0210-14A0	2	240210
01010-80625	K0210-20A5	13	240280
01010-80625	K0210-20A5	18	240280
01010-80625	K0210-20A9	14	240290
01010-80625	K0210-20A9	19	240290
01010-80625	K0711-01A0	24	240690
01010-80625	K0711-01A0	28	240690
01010-80630	K0210-16A0	12	240230
01010-80630	K0210-16A0	6	240230
01010-80630	K0711-01A0	21	240690
01010-80630	K0711-01A0	31	240690
01010-80635	C0110-01A0	31	060010
01010-80635	C0110-04A0	28	060040
01010-80812	D0100-01A0	7	090010
01010-80812	F2420-54A0	11	150060
01010-80816	B0110-02A0	19	030040
01010-80816	D0100-01A0	12	090010
01010-80816	E0201-01A0	4	120051
01010-80816	E0201-01A0	8B	120051
01010-80816	E0202-05A0	4	120100
01010-80816	E0410-01A0	3	120120
01010-80816	F2420-54A0A	11	150061
01010-80816	K0210-08A0	2	240120
01010-80816	K0210-08A4	2	240130
01010-80816	K0210-53A5	8	240560
01010-80816	M4100-01A0	7	270010
01010-80816	M4100-04A0	16	270040
01010-80816	M4100-04A0	33	270040
01010-80816	M4100-08A0	9	270070
01010-80816	M4100-10A0A	11	270090
01010-80816	M4100-10A0A	14	270090
01010-80816	M4100-10A0A	27	270090
01010-80816	M4100-13B2	2	270110
01010-80820	E0202-02A0	12	120070
01010-80820	H4410-01A0	21	180210
01010-80820	K0210-10A0	7	240150
01010-80820	K0210-10A4	6	240160
01010-80820	M4100-02A0	3	270020
01010-80820	M4100-04A0	39	270040
01010-80820	M4100-04A0	4	270040
01010-80820	M4100-05A0	10	270050

PARTS Nº	FIG. Nº	INDEX	PAGE
01010-80820	M4100-05A0	15	270050
01010-80820	M4100-05A0	7	270050
01010-80820	M4100-11A0	2	270100
01010-80820	M4100-11A0	5	270100
01010-80820	M4100-11A0	8	270100
01010-80825	C0110-01A0	10	060010
01010-80825	C0110-02A0	28	060020
01010-80825	C0110-04A0	14	060040
01010-80825	E0201-01A0	7	120051
01010-80825	E0202-05A0	4	120100
01010-80825	F2760-03A0	2	150100
01010-80830	E0202-02A0	4	120070
01010-80840	H4200-01A0	12	180080
01010-80840	H4200-01A0	18	180080
01010-80845	K4460-02A0	14	240800
01010-80855	H4200-01A0	10	180080
01010-80855	K4410-01A0	2	240770
01010-80870	K4450-01A0	2	240780
01010-80885	H0122-01A0	19	180040
01010-81016	B0110-01A0	44	030020
01010-81016	B0110-01A1	42	030030
01010-81016	B0110-01A1	52	030030
01010-81016	E0200-01A4	9	120040
01010-81016	E0202-01A2	16	120060
01010-81016	J4140-01A0	5	210060
01010-81016	J4710-01A0	10	210100
01010-81016	J4710-01A0	4	210100
01010-81016	K0210-03A0	26	240060
01010-81016	K0210-10A0	9	240150
01010-81016	K0210-10A4	8	240160
01010-81016	K0210-20A5	21	240280
01010-81016	K0210-20A5	24	240280
01010-81016	K0210-20A5	7	240280
01010-81016	K0210-20A9	22	240290
01010-81016	K0210-20A9	25	240290
01010-81016	K0210-20A9	8	240290
01010-81016	K0210-22A5	2	240310
01010-81016	K0210-27A0	29	240380
01010-81016	K0210-53A5	24	240560
01010-81016	K0210-53A6	12	240570
01010-81016	K0210-55A5A	60	240600
01010-81016	K0210-56A5A	47	240610
01010-81016	K4504-01A0	9	240840
01010-81016	M4100-05A0	2	270050
01010-81020	B0110-01A0	11	030020
01010-81020	B0110-01A0	20	030020
01010-81020	B0110-01A0	23	030020
01010-81020	B0110-01A0	29	030020
01010-81020	B0110-01A0	33	030020
01010-81020	B0110-01A1	37	030030
01010-81020	B0110-01A1	40	030030
01010-81020	B0110-01A1	7	030030
01010-81020	B0110-02A0	3	030040
01010-81020	B0110-02A0	7	030040
01010-81020	C0110-01A0	13	060010
01010-81020	C0110-01A0	21	060010
01010-81020	C0110-02A0	13	060020
01010-81020	C0110-02A0	22	060020
01010-81020	C0110-04A0	20	060040
01010-81020	C0110-04A0	3	060040
01010-81020	C0110-04A0	37	060040
01010-81020	C0400-01A0A	11	060060
01010-81020	C0400-01A0A	17	060060
01010-81020	C0400-01A0A	23	060060
01010-81020	C0400-01A0A	4	060060
01010-81020	D0100-01A0	30	090010
01010-81020	D0100-01A0	34	090010
01010-81020	D0100-01A0	38	090010
01010-81020	E0120-01A1	16	120020
01010-81020	E0120-01A1	2	120020
01010-81020	E0120-01A1	20	120020
01010-81020	E0120-01A1	6	120020
01010-81020	E0200-01A4	11	120040
01010-81020	E0200-01A4	20	120040
01010-81020	E0200-01A4	7	120040
01010-81020	E0202-01A2	14	120060
01010-81020	E0202-03A2	11	120080
01010-81020	E0202-03A2	3	120080
01010-81020	E0202-03A2	6	120080
01010-81020	E0202-04A0	6	120090
01010-81020	F2760-01A1	38	150081
01010-81020	F2760-01A1	41	150081
01010-81020	F4460-01A0	9	150170
01010-81020	H0110-01A0A	16	180010
01010-81020	H0110-01A0A	19	180010
01010-81020	H0122-02A0	17	180050
01010-81020	H2260-01A0	16	180070
01010-81020	H2260-01A0	6	180070
01010-81020	H4200-06A0	5	180140

PARTS Nº	FIG. Nº	INDEX	PAGE
01010-81020	H4200-08A0	19	180160
01010-81020	H4200-08A0	21	180160
01010-81020	H4200-09A0	42	180170
01010-81020	H4200-09A2	42	180180
01010-81020	H4200-09A2	45	180180
01010-81020	H4200-13A2	33	180200
01010-81020	H4410-01A0	15	180210
01010-81020	K0210-03A0	3	240060
01010-81020	K0210-03A0	6	240060
01010-81020	K0210-03A0	8	240060
01010-81020	K0210-03A5	5	240070
01010-81020	K0210-06A5	32	240100
01010-81020	K0210-06A5	6	240100
01010-81020	K0210-07A0	4	240110
01010-81020	K0210-12A0A	40	240190
01010-81020	K0210-13A0	10	240200
01010-81020	K0210-13A0	13	240200
01010-81020	K0210-15A0	12	240220
01010-81020	K0210-16A0	15	240230
01010-81020	K0210-16A0	2	240230
01010-81020	K0210-16A9	15	240240
01010-81020	K0210-20A5	31	240280
01010-81020	K0210-20A9	32	240290
01010-81020	K0210-20A9	36	240290
01010-81020	K0210-20A9	39	240290
01010-81020	K0210-20A9	42	240290
01010-81020	K0210-32A5	6	240430
01010-81020	K0210-32A6	6	240440
01010-81020	K0210-54A5	21	240580
01010-81020	K0210-54A6	3	240590
01010-81020	K0711-01A0	17	240690
01010-81020	K0711-02A0	7	240700
01010-81020	K0711-03A0	7	240710
01010-81020	K0713-01A0	11	240720
01010-81020	K0713-01A0	15	240720
01010-81020	K4450-01A0	20	240780
01010-81020	K4450-01A0	26	240780
01010-81020	K4460-03A0	10	240810
01010-81020	K4460-03A0	15	240810
01010-81020	K4460-03A0	19	240810
01010-81020	K4460-03A0	3	240810
01010-81020	M4100-03A0	14	270030
01010-81020	M4100-03A0	28	270030
01010-81020	M4100-03A0	4	270030
01010-81020	M4100-04A0	13	270040
01010-81020	M4100-04A0	22	270040
01010-81020	M4100-04A0	27	270040
01010-81020	M4100-08A0	2	270070
01010-81020	M4100-08A0	5	270070
01010-81020	M4100-09A0	5	270080

PARTS Nº	FIG. Nº	INDEX	PAGE
01010-81020	M4100-10A0A	17	270090
01010-81020	M4100-10A0A	20	270090
01010-81020	M4100-10A0A	32	270090
01010-81020	M4100-10A0A	38	270090
01010-81020	M4100-10A0A	5	270090
01010-81020	M4230-01A0	18	270150
01010-81025	A1030-01A1Z	2	030040
01010-81025	B0110-01A1	49	030030
01010-81025	C0110-01A0	28	060010
01010-81025	C0110-04A0	34	060040
01010-81025	E0202-05A0	1	120100
01010-81025	E0300-01A0	29	120110
01010-81025	H0110-01A0A	8	180010
01010-81025	H0122-02A0	11	180050
01010-81025	H0122-02A0	24	180050
01010-81025	H2260-01A0	18	180070
01010-81025	H4200-03A0	18	180100
01010-81025	H4200-09A0	36	180170
01010-81025	H4200-09A0	39	180170
01010-81025	H4200-09A0	5	180170
01010-81025	H4200-09A2	36	180180
01010-81025	H4200-09A2	39	180180
01010-81025	H4200-09A2	5	180180
01010-81025	J4190-01A6	18	210081
01010-81025	J4190-01A7	18	210082
01010-81025	K0210-02A0	9B	240050
01010-81025	K0210-09A0	33	240140
01010-81025	K0210-09A0	9	240140
01010-81025	K0210-10A4	17	240160
01010-81025	K0210-20A5	27	240280
01010-81025	K0210-20A9	28	240290
01010-81025	K0711-02A0	11	240700
01010-81025	K0711-02A0	16	240700
01010-81025	K0711-02A0	18	240700
01010-81025	K0711-02A0	20	240700
01010-81025	M4100-03A0	18	270030
01010-81025	M4100-03A0	8	270030
01010-81025	M4210-01A1	2	270140
01010-81025	M4210-01A1	5	270140
01010-81030	D0100-02A0	2	090020
01010-81030	F2420-54A0A	40	150061
01010-81030	F4810-01A0	11	150230
01010-81030	H2260-01A0	11	180070
01010-81030	H4200-08A0	14	180160
01010-81030	H4200-13A2	10	180200
01010-81030	H4410-01A0	7	180210
01010-81030	J4130-01A0	5	210050
01010-81030	K4460-02A0	26	240800
01010-81030	K4460-02A0	41	240800
01010-81030	M4230-01A0	11	270150

PARTS N°	FIG. N°	INDEX	PAGE
01010-81030	M4230-01A0	14	270150
01010-81030	M4230-01A0	2	270150
01010-81030	M4230-01A0	21	270150
01010-81030	M4230-01A0	24	270150
01010-81030	M4230-01A0	5	270150
01010-81030	M4230-01A0	8	270150
01010-81035	C0110-01A0	8	060010
01010-81035	C0110-04A0	12	060040
01010-81035	F2760-02A0	36	150090
01010-81035	F4810-01A0	11	150230
01010-81035	H0110-01A0A	13	180010
01010-81035	H0110-01A0A	37	180010
01010-81035	K0210-12A0A	6	240190
01010-81035	K0210-12A0A	24	240190
01010-81040	K0210-29A0	9	240400
01010-81045	B0600-01A0	4	030060
01010-81045	F2420-01A0	18	150010
01010-81045	H4200-08A0	9	180160
01010-81045	K4460-02A0	29	240800
01010-81050	H0120-01A2	3	180020
01010-81050	H0120-01A4	3	180030
01010-81050	H2260-01A0	8	180070
01010-81050	H4200-07A0	11	180150
01010-81050	H4200-13A2	8	180200
01010-81055	H4200-03A0	3	180100
01010-81055	H4200-08A0	7	180160
01010-81060	H0120-01A2	6	180020
01010-81060	H0120-01A4	6	180030
01010-81060	H0122-01A0	31	180040
01010-81060	H4200-04A2	16	180110
01010-81065	H0110-01A0A	35	180010
01010-81075	K4460-02A0	43	240800
01010-81080	B0300-01A0	3	030050
01010-81080	K0711-01A0	4	240690
01010-81220	B0110-01A0	2	030020
01010-81220	B0110-01A1	2	030030
01010-81220	B0110-02A0	17	030040
01010-81220	E0200-03A1	5	120050
01010-81220	J4140-01A0	13	210060
01010-81220	K0210-10A0	24	240150
01010-81220	K0210-10A4	35	240160
01010-81220	K0210-11A4	33	240180
01010-81220	K0711-02A0	2	240700
01010-81220	M4100-01A0	12	270010
01010-81225	A1610-01H6	19	030180
01010-81225	C0120-01A0	13	060050
01010-81225	C0120-01A0	15	060050
01010-81225	F2420-53A0	19	150050
01010-81225	F2420-53A0	19	150050
01010-81225	F2760-03A0	21	150100

PARTS N°	FIG. N°	INDEX	PAGE
01010-81225	H0122-02A0	4	180050
01010-81225	J4120-01A0	3	210030
01010-81225	J4120-01A1	3	210040
01010-81225	J4190-01A0	11	210070
01010-81225	J4190-01A4	11	210080
01010-81225	J4190-01A6	11	210081
01010-81225	J4190-01A7	11	210082
01010-81225	J4190-01A7	6	210082
01010-81225	K0210-05A0	2	240090
01010-81225	K0210-06A5	4	240100
01010-81225	K0210-36A0	2	240490
01010-81225	K0711-03A0	1	240710
01010-81225	K0711-03A0	9	240710
01010-81225	K4450-01A0	13	240780
01010-81225	K4460-01A0	19	240790
01010-81225	K4504-01A0	2	240840
01010-81225	M4100-03A0	26	270030
01010-81225	M4200-01A0	19	270130
01010-81225	M4200-01A0	14	270130
01010-81225	M4200-01A0	2	270130
01010-81225	M4200-01A0	8	270130
01010-81225	M4210-01A1	14	270140
01010-81225	M4310-01A0	2	270160
01010-81225	M4310-01A0	5	270160
01010-81225	M4510-01A3	10	270190
01010-81225	T4110-03A0	2	330040
01010-81230	C0110-01A0	23	060010
01010-81230	C0110-04A0	22	060040
01010-81230	F2420-01A0	11	150010
01010-81230	F2420-01A0	8	150010
01010-81230	H4200-03A0	8	180100
01010-81230	J4130-01A0	16	210050
01010-81230	J4130-01A0	22	210050
01010-81230	J4190-01A0	6	210070
01010-81230	J4190-01A4	6	210080
01010-81230	J4190-01A6	15	210081
01010-81230	J4190-01A6	6	210081
01010-81230	J4190-01A7	15	210082
01010-81230	K0110-01A7	7	240010
01010-81230	K0110-01A8	7	240020
01010-81230	K0110-01A9	7	240021
01010-81230	K0210-16A9	9	240240
01010-81230	K4460-02A0	46	240800
01010-81230	K4504-01A0	5	240840
01010-81230	M4100-03A0	33	270030
01010-81230	M4100-07A0	1	270060
01010-81230	M4200-01A0	16	270130
01010-81230	M4200-01A0	19	270130
01010-81230	M4200-01A0	21	270130
01010-81230	M4210-01A1	10	270140

PARTS N°	FIG. N°	INDEX	PAGE
01010-81230	T4110-03A0	5	330040
01010-81235	F2420-51A0	10	150030
01010-81235	F2420-51A0	3	150030
01010-81235	F2420-52A0	26	150040
01010-81235	F2420-54A0	24	150060
01010-81235	F2420-54A0	36	150060
01010-81235	F2420-54A0A	24	150061
01010-81235	F2420-54A0A	36	150061
01010-81235	H0110-01A0A	48	180010
01010-81235	H0120-01A2	8	180020
01010-81235	H0120-01A4	8	180030
01010-81235	H0210-01A0	4	180060
01010-81235	H4200-02A0	12	180090
01010-81235	K0711-01A0	8	240690
01010-81235	K4504-01A0	12	240840
01010-81235	M4510-01A3	12	270190
01010-81240	B0100-01A0	5	030010
01010-81240	B0110-02A0	10	030040
01010-81240	F2430-01A0	2	150070
01010-81240	H0210-01A0	2	180060
01010-81245	C0110-03A0	8	060030
01010-81250	B0100-01A0	7	030010
01010-81250	F2430-01A0	12	150070
01010-81250	F2430-01A0	8	150070
01010-81250	H4200-02A0	1	180090
01010-81250	J4210-01A0	6	210090
01010-81255	H0122-01A0	17	180040
01010-81255	H0122-02A0	30	180050
01010-81255	H4200-06A0	19	180140
01010-81255	K0210-29A0	7	240400
01010-81260	K0210-30A0	22	240410
01010-81265	C0110-03A0	12	060030
01010-81265	C0110-03A0	16	060030
01010-81265	H0210-01A0	13	180060
01010-81265	J4210-01A0	3	210090
01010-81265	K0210-12A0A	19	240190
01010-81265	K0711-01A0	10	240690
01010-81275	F2420-52A0	32	150040
01010-81285	F2420-54A0	25	150060
01010-81285	F2420-54A0A	25	150061
01010-81625	T4110-01A0	17	330010
01010-81625	T4110-01A0	22	330010
01010-81625	T4110-01A1	17	330020
01010-81625	T4110-01A1	22	330020
01010-81625	T4110-02A0	2	330030
01010-81625	T4110-02A0	6	330030
01010-81625	T4140-01A0	6	330080
01010-81625	T4150-01A0	6	330090
01010-81635	D0100-01A0	25	090010
01010-81635	D0100-01A0	26	090010

PARTS N°	FIG. N°	INDEX	PAGE
01010-81645	F2430-01A0	4	150070
01010-81650	F2420-01A0	2	150010
01010-81650	F2420-01A0	5	150010
01010-81665	D0100-01A0	27	090010
01010-81665	H0122-01A0	10	180040
01010-81695	F4460-01A0	13	150170
01010-81845	K4100-01A0	4	240750
01010-82065	M4510-01A3	6	270190
01010-D0616	K0210-05A0	6	240090
01010-D0630	K0210-27A0	20	240380
01010-D0820	M4100-04A0	7	270040
01010-D0820	M4100-04A0	9	270040
01010-D1020	E0120-02A1	2	120030
01010-D1020	E0120-02A1	21	120030
01010-D1020	E0120-02A1	24	120030
01011-61615	F4400-52A0	12	150140
01011-61615	F4500-52A0	11	150200
01011-61620	F4400-54A0	2	150160
01011-61620	F4500-54A0	2	150220
01011-62440	J4210-01A0	14	210090
01011-62480	M4510-01A3	2	270190
01011-81005	F2760-01A0	30	150080
01011-81005	F2760-01A1	32	150081
01011-81030	H4200-02A0	20	180090
01011-81030	H4200-02A0	9	180090
01011-81035	K0210-30A0	20	240410
01011-81045	H4200-03A0	16	180100
01011-81215	B0110-01A0	17	030020
01011-81215	B0110-01A1	17	030030
01011-81255	F2420-54A0	26	150060
01011-81255	F2420-54A0A	26	150061
01011-82220	B0100-01A0	11	030010
01011-82220	F4810-01A0	4	150230
01011-82475	F4400-01A0	4	150120
01016-50870	K0210-27A0	17	240380
01016-51090	K0711-01A0	12	240690
01018-31095	A601T-01B1	4	030810
01023-10320	K0210-01A0	14	240040
01023-10412	K0210-09A0	24	240140
01023-10414	M4100-02A0	11	270020
01023-10420	M4100-02A0	12	270020
01023-10510	D0100-01A0	23	090010
01023-10510	D0100-01A0	5	090010
01023-10510	K0810-01A1	7	240730
01023-10510	K0810-01A2	7	240740
01023-10512	K0210-09A0	24	240140
01023-10514	K0210-09A0	7	240140
01023-10612	E0300-01A0	32	120110
01023-10612	K0210-05A0	10	240090
01023-20616	K0210-26A2	11	240360

PARTS N°	FIG. N°	INDEX	PAGE
01023-20616	K0210-26A9	11	240370
01023-20616	K0210-26B0	11	240371
01023-60410	K0210-09A0	17	240140
01023-60412	K0810-01A1	2	240730
01023-60412	K0810-01A2	3	240740
01023-60430	K0210-55A5A	24	240600
01023-60430	K0210-56A5A	18	240610
01023-60612	K0210-54A5	19	240580
01023-60612	K0210-54A6	1	240590
01023-70316	K0210-32A5	16	240430
01023-70416	M4410-01A2	13	270170
01023-70512	K0210-31A0	3	240420
01023-70620	K0210-52A5	6	240540
01023-70620	K0210-52A5A	6	240541
01023-70620	K0210-52A7	2	240551
01050-51030	K0210-30A0	11	240410
01050-51245	B0110-01A0	26	030020
01050-51245	B0110-01A1	26	030030
01050-61045	F4200-01A0	2	150110
01050-61045	F4200-01A0	4	150110
01220-40408	E0120-01A1	12	120020
01220-40408	E0120-01A1	26	120020
01220-40410	E0120-01A1	13	120020
01220-40410	E0120-01A1	27	120020
01220-40412	K0210-22A5	13	240310
01220-40420	K0210-46A5	2	240500
01220-40420	K0810-01A3	4	240741
01220-40520	K0210-22A5	7	240310
01224-40620	K0210-54A5	8	240580
01224-70412	K0210-52A5	13	240540
01224-70412	K0210-52A5A	12	240541
01224-70412	K0210-52A6	10	240550
01224-70420	K0210-52A5	13	240540
01224-70420	K0210-52A6	10	240550
01224-70616	K0210-55A5A	18	240600
01224-70616	K0210-55A5A	38	240600
01224-70616	K0210-56A5A	25	240610
01224-70616	K0210-56A5A	5	240610
01225-70616	K0210-04A0	3	240080
01225-70616	K0210-04A0	6	240080
01225-70616	K0210-06A5	15	240100
01225-70616	K0210-06A5	18	240100
01225-70616	K0210-06A5	24	240100
01225-70616	K0210-06A5	9	240100
01225-70616	K0210-08A0	5	240120
01225-70616	K0210-08A4	5	240130
01225-70616	K0210-32A5	4	240430
01225-70616	K0210-32A6	4	240440
01225-70616	K0210-33A5	11	240450
01225-70616	K0210-33A5	15	240450

PARTS N°	FIG. N°	INDEX	PAGE
01225-70616	K0210-33A5	17	240450
01225-70616	K0210-33A5	23	240450
01225-70616	K0210-33A5	25	240450
01225-70616	K0210-33A9	11	240460
01225-70616	K0210-33A9	15	240460
01225-70616	K0210-33A9	17	240460
01225-70616	K0210-33A9	27	240460
01225-70616	K0210-33A9	29	240460
01225-70616	K0210-55A5A	39	240600
01225-70616	K0210-56A5A	26	240610
01225-70620	K0210-33A9	21	240460
01225-70620	K0210-59A0	12	240640
01225-70620	K0210-59A0	4	240640
01225-70620	K0210-59A5	12	240650
01225-70620	K0210-59A5	4	240650
01240-01025	K0210-53A5	29	240560
01252-30625	Y1670-01A2	15	420350
01252-30816	F2420-54A0	32	150060
01252-30816	F2420-54A0A	32	150061
01252-31260	F2420-53A0	10	150050
01252-60616	Y1663-01A0	19	420320
01252-60625	Y1663-01A0	21	420320
01252-60635	Y1663-01A0	40	420320
01252-60816	F4400-53A0	31	150150
01252-60816	F4500-53A0	24	150210
01252-61015	Y1610-32A0	15	420160
01252-61035	Y1610-33A0	15	420170
01252-61270	Y1610-33A0	11	420170
01252-70825	Y1610-33A0	19	420170
01252-70830	Y1610-34A0	17	420180
01252-71040	K0210-12A0A	6	240190
01252-71055	H0110-01A0A	29	180010
01252-71055	Y1610-34A0	12	420180
01252-71245	H0210-01A0	16	180060
01252-80825	K0210-01A0	2	240040
01253-61200	Y1610-32A0	11	420160
01253-61410	Y1610-31A0	11	420150
01370-00412	K0210-02A0	15	240050
01370-00412	K0210-02A0	8	240050
01370-00516	K0210-31A0	4	240420
01435-00616	A206P-01A7	7	030250
01435-00620	A4510-01A5	2	030680
01435-00812	A6010-01B1	3	030830
01435-00816	A1570-01E7	20	030170
01435-00816	A6510-01A0	6	030870
01435-00820	A1410-01D3	12	030100
01435-00820	A1410-01D3	14	030100
01435-00820	A1410-01D3	19	030100
01435-00820	A1570-01E7	22	030170
01435-00820	A1570-01E7	5	030170

PARTS Nº	FIG. Nº	INDEX	PAGE
01435-00820	A1610-01H6	10	030180
01435-00820	A1610-01H6	18	030180
01435-00825	A1410-01D3	16	030100
01435-00825	A1410-01D3	22	030100
01435-00825	A1610-01H6	13	030180
01435-00825	A6510-01A0	5	030870
01435-00830	A1570-01E7	12	030170
01435-00830	A1610-01H6	11	030180
01435-00895	M4100-04A0	37	270040
01435-01016	A5210-01B5	27	030770
01435-01020	A1570-01E7	2	030170
01435-01020	A1610-01H6	22	030180
01435-01020	A1610-01H6	6	030180
01435-01020	A1610-01H6	9	030180
01435-01020	A207S-01A0	6	030270
01435-01020	E0201-01A0	20	120051
01435-01025	A1610-01H6	3	030180
01435-01025	K0210-35A0	3	240480
01435-01025	K0210-57A5	8	240620
01435-01025	M4410-01A2	3	270170
01435-01025	M4410-01A3	3	270180
01435-01030	A1410-01D3	18	030100
01435-01030	A1410-01D3	21	030100
01435-01030	A1570-01E7	9	030170
01435-01030	A5210-01B5	10	030770
01435-01030	K0210-35A0	4	240480
01435-01030	K0210-51A9	2	240530
01435-01035	A621S-01A7Z	2	030860
01435-01040	A1570-01E7	13	030170
01435-01050	A5210-01B5	12	030770
01435-01060	A1570-01E7	16	030170
01435-01065	A1410-01D3	30	030100
01435-01065	A1570-01E7	7	030170
01435-01070	A1610-01H6	24	030180
01435-01070	A4510-01A5	6	030680
01435-01080	A5210-01B5	17	030770
01435-01080	A5210-01B5	7	030770
01435-01085	A1610-01H6	8	030180
01435-01085	A5210-01B5	11	030770
01435-01085	A5210-01B5	8	030770
01435-01225	A5210-01B5	24	030770
01435-01230	A1050-01A0	2	030050
01435-40620	K0210-52A5	9	240540
01435-40620	K0210-52A5A	9	240541
01435-40620	K0210-52A6	6	240550
01435-40820	K0110-01A7	4	240010
01435-40820	K0110-01A8	4	240020
01435-40820	K0110-01A9	4	240021
01436-01205	A1410-01D3	23	030100
01438-02000	F4400-51A0	13	150130
01438-02000	F4500-51A0	13	150190
01508-40603	A4510-01A5	15	030680
01508-40603	K0210-10A0	21	240150
01508-40603	K0210-10A4	32	240160
01580-00605	A4510-01A5	14	030680
01580-00605	A4510-01A5	9	030680
01580-01008	A1410-01D3	31	030100
01580-01210	K0210-30A0	28	240410
01580-01210	M4210-01A1	13	270140
01580-02218	B0100-01A0	13	030010
01580-02218	F4810-01A0	6	150230
01580-02419	F4400-01A0	5	150120
01580-02419	J4210-01A0	16	210090
01580-10302	K0210-01A0	16	240040
01580-10403	K0210-55A5A	23	240600
01580-10403	K0210-56A5A	17	240610
01580-10403	K0810-01A1	3	240730
01580-10605	K0210-10A0	20	240150
01580-10605	K0210-10A4	31	240160
01580-10806	E0120-01A1	32	120020
01580-10806	K0210-27A0	18	240380
01580-11008	B0300-01A0	6	030050
01580-11008	F4810-01A0	9	150230
01580-11008	H4200-02A0	10	180090
01580-11008	H4200-02A0	21	180090
01580-11008	H4200-03A0	5	180100
01580-11008	K0210-57A5	2	240620
01580-11008	K0210-57A5	4	240620
01580-11008	K0711-01A0	13	240690
01580-11210	H4200-03A0	10	180100
01580-11210	K0210-36A0	4	240490
01580-11210	K4504-01A0	13	240840
01580-11210	M4210-01A1	13	270140
01580-60403	M4100-02A0	13	270020
01582-01411	A408P-01B0	10	030590
01582-11008	K4460-02A0	3	240800
01582-11210	K0210-12A0A	16	240190
01582-11210	K0210-12A0A	9	240190
01582-11411	K0210-10A0	6	240150
01582-11411	K0210-10A4	10	240160
01582-11411	K0210-10A4	16	240160
01583-11408	K0210-11A0	1	240170
01583-11408	K0210-11A0	15	240170
01583-11408	K0210-11A0	22	240170
01583-11408	K0210-11A4	30	240180
01584-00605	F4460-01A0	18	150170
01584-00605	K4410-01A0	5	240770
01584-00806	A4510-01A5	7	030680
01584-00806	A6510-01A0	8	030870
01590-10607	A4510-01A5	11	030680
01595-01210	K0210-12A0A	11	240190
01595-01210	K0210-12A0A	14	240190
01596-00606	K4410-01A0	7	240770
01596-01009	K0210-30A0	19	240410
01596-02419	K4100-01A0	3	240750
01597-01009	E0200-01A4	15	120040
01597-01009	F2760-02A0	41	150090
01597-01009	H0122-02A0	8	180050
01597-01009	H4200-04A2	7	180110
01597-01009	H4200-06A0	16	180140
01597-01009	H4200-13A2	29	180200
01597-01009	K0210-10A0	29	240150
01597-01009	K0210-10A4	40	240160
01597-01009	K0711-03A0	5	240710
01597-01009	Y1620-01A0	24	420190
01597-02419	J4130-01A0	14	210050
01601-20410	K0810-01A2	4	240740
01602-21030	K0210-30A0	12	240410
01611-04045	K0210-02A0	16	240050
01611-04045	K0210-02A0	9	240050
01640-20305	K0210-01A0	15	240040
01640-20408	K0810-01A1	4	240730
01640-20610	A206P-01A7	8	030250
01640-20610	A4510-01A5	3	030680
01640-20610	K0210-27A0	33	240380
01640-20610	K0210-32A6	22	240440
01640-20610	K0210-55A5A	40	240600
01640-20610	K0210-56A5A	27	240610
01640-20816	A4510-01A5	17	030680
01640-20816	A6010-01B1	4	030830
01640-20816	M4100-03A0	30	270030
01640-20816	M4100-04A0	19	270040
01640-21016	C0110-01A0	26	060010
01640-21016	C0110-04A0	25	060040
01640-21016	M4410-01A2	9	270170
01640-21016	M4410-01A3	9	270180
01641-01016	A601T-01B1	5	030810
01641-20405	E0120-01A1	14	120020
01641-20405	E0120-01A1	28	120020
01641-20405	K0210-22A5	14	240310
01641-20508	K0210-22A5	8	240310
01641-20608	K0210-01A0	11	240040
01641-20812	E0120-01A1	23	120020
01641-20812	E0120-01A1	9	120020
01641-20812	F4460-01A0	3	150170
01641-20812	K0210-31A0	5	240420
01641-21016	F4460-01A0	5	150170
01643-30623	B0110-02A0	15	030040
01643-30623	C0110-01A0	32	060010
01643-30623	C0110-04A0	29	060040
01643-30623	E0201-01A0	13	120051
01643-30623	E0202-02A0	16	120070
01643-30623	E0300-01A0	33	120110
01643-30623	K0210-02A0	13	240050
01643-30623	K0210-02A0	20	240050
01643-30623	K0210-06A5	13	240100
01643-30623	K0210-06A5	29	240100
01643-30623	K0210-09A0	22	240140
01643-30623	K0210-14A0	3	240210
01643-30623	K0210-15A0	10	240220
01643-30623	K0210-16A0	13	240230
01643-30623	K0210-16A0	7	240230
01643-30623	K0210-16A9	4	240240
01643-30623	K0210-20A5	19	240280
01643-30623	K0210-20A5	14	240280
01643-30623	K0210-20A5	19	240280
01643-30623	K0210-20A9	20	240290
01643-30623	K0210-20A9	15	240290
01643-30623	K0210-20A9	20	240290
01643-30623	K0210-22A5	11	240310
01643-30623	K0210-22A5	19	240310
01643-30623	K0210-22A5	24	240310
01643-30623	K0210-23A0	3	240320
01643-30623	K0210-23A0	7	240320
01643-30623	K0210-26A2	15	240360
01643-30623	K0210-26A9	15	240370
01643-30623	K0210-26B0	15	240371
01643-30623	K0210-27A0	19	240380
01643-30623	K0210-32A5	13	240430
01643-30623	K0210-32A5	21	240430
01643-30623	K0210-32A6	19	240440
01643-30623	K0210-32A6	32	240440
01643-30623	K0210-32A6	34	240440
01643-30623	K0210-32A6	40	240440
01643-30623	K0210-54A5	26	240580
01643-30623	K0210-54A5	5	240580
01643-30623	K0210-54A6	8	240590
01643-30623	K0210-55A5A	41	240600
01643-30623	K0210-56A5A	28	240610
01643-30623	K0210-59A0	15	240640
01643-30623	K0210-59A0	7	240640
01643-30623	K0210-59A5	15	240650
01643-30623	K0210-59A5	7	240650
01643-30623	K0711-01A0	22	240690
01643-30623	K0711-01A0	25	240690
01643-30623	K0711-01A0	29	240690
01643-30623	K0711-01A0	32	240690
01643-30623	K4410-01A0	8	240770
01643-30623	M4100-02A0	6	270020
01643-30623	M4410-01A2	11	270170
01643-30823	A411S-01C0	31	030630
01643-30823	B0110-02A0	20	030040
01643-30823	C0110-01A0	11	060010
01643-30823	C0110-02A0	29	060020
01643-30823	C0110-04A0	15	060040
01643-30823	D0100-01A0	13	090010
01643-30823	D0100-01A0	8	090010
01643-30823	E0120-01A1	31	120020
01643-30823	E0201-01A0	5	120051
01643-30823	E0201-01A0	8	120051
01643-30823	E0201-01A0	8C	120051
01643-30823	E0202-02A0	13	120070
01643-30823	E0202-02A0	5	120070
01643-30823	E0202-05A0	6	120100
01643-30823	E0410-01A0	4	120120
01643-30823	F2420-54A0	12	150060
01643-30823	F2420-54A0A	12	150061
01643-30823	F2760-03A0	3	150100
01643-30823	H0122-01A0	20	180040
01643-30823	H4200-01A0	11	180080
01643-30823	H4200-01A0	13	180080
01643-30823	H4410-01A0	22	180210
01643-30823	K0210-08A0	3	240120
01643-30823	K0210-08A4	3	240130
01643-30823	K0210-10A0	8	240150
01643-30823	K0210-10A4	7	240160
01643-30823	K0210-53A5	9	240560
01643-30823	K4410-01A0	3	240770
01643-30823	K4450-01A0	3	240780
01643-30823	M4100-01A0	8	270010
01643-30823	M4100-02A0	4	270020
01643-30823	M4100-04A0	17	270040
01643-30823	M4100-04A0	34	270040
01643-30823	M4100-04A0	40	270040
01643-30823	M4100-04A0	5	270040
01643-30823	M4100-05A0	11	270050
01643-30823	M4100-05A0	16	270050
01643-30823	M4100-05A0	8	270050
01643-30823	M4100-08A0	10	270070
01643-30823	M4100-10A0A	12	270090
01643-30823	M4100-10A0A	15	270090
01643-30823	M4100-10A0A	28	270090
01643-30823	M4100-11A0	3	270100
01643-30823	M4100-11A0	6	270100
01643-30823	M4100-11A0	9	270100
01643-30823	M4100-13B2	3	270110
01643-31032	A1030-01A1Z	3	030040
01643-31032	A1570-01E7	15	030170
01643-31032	A5210-01B5	6	030770
01643-31032	B0110-01A0	12	030020
01643-31032	B0110-01A0	15	030020
01643-31032	B0110-01A0	21	030020
01643-31032	B0110-01A0	24	030020
01643-31032	B0110-01A0	30	030020
01643-31032	B0110-01A0	34	030020
01643-31032	B0110-01A0	38	030020
01643-31032	B0110-01A0	41	030020
01643-31032	B0110-01A0	43	030020
01643-31032	B0110-01A0	45	030020
01643-31032	B0110-01A0	8	030020
01643-31032	B0110-01A1	12	030030
01643-31032	B0110-01A1	15	030030
01643-31032	B0110-01A1	21	030030
01643-31032	B0110-01A1	24	030030
01643-31032	B0110-01A1	30	030030
01643-31032	B0110-01A1	34	030030
01643-31032	B0110-01A1	38	030030
01643-31032	B0110-01A1	41	030030
01643-31032	B0110-01A1	43	030030
01643-31032	B0110-01A1	50	030030
01643-31032	B0110-01A1	53	030030
01643-31032	B0110-01A1	8	030030
01643-31032	B0110-02A0	4	030040
01643-31032	B0110-02A0	8	030040
01643-31032	B0300-01A0	4	030050
01643-31032	B0300-01A0	5	030050
01643-31032	B0600-01A0	5	030060
01643-31032	C0110-01A0	14	060010
01643-31032	C0110-01A0	20	060010
01643-31032	C0110-01A0	29	060010
01643-31032	C0110-01A0	9	060010
01643-31032	C0110-02A0	14	060020
01643-31032	C0110-02A0	23	060020
01643-31032	C0110-04A0	13	060040
01643-31032	C0110-04A0	21	060040
01643-31032	C0110-04A0	35	060040
01643-31032	C0110-04A0	38	060040
01643-31032	C0110-04A0	4	060040
01643-31032	C0400-01A0A	12	060060
01643-31032	C0400-01A0A	18	060060
01643-31032	C0400-01A0A	24	060060
01643-31032	C0400-01A0A	5	060060
01643-31032	D0100-01A0	31	090010
01643-31032	D0100-01A0	35	090010
01643-31032	D0100-01A0	39	090010
01643-31032	D0100-02A0	3	090020
01643-31032	E0120-01A1	17	120020
01643-31032	E0120-01A1	21	120020
01643-31032	E0120-01A1	3	120020

PARTS N°	FIG. N°	INDEX	PAGE
01643-31032	E0120-01A1	7	120020
01643-31032	E0200-01A4	10	120040
01643-31032	E0200-01A4	12	120040
01643-31032	E0200-01A4	16	120040
01643-31032	E0200-01A4	21	120040
01643-31032	E0200-01A4	8	120040
01643-31032	E0201-01A0	21	120051
01643-31032	E0202-01A2	15	120060
01643-31032	E0202-01A2	17	120060
01643-31032	E0202-03A2	12	120080
01643-31032	E0202-03A2	4	120080
01643-31032	E0202-03A2	7	120080
01643-31032	E0202-04A0	7	120090
01643-31032	E0202-05A0	2	120100
01643-31032	E0300-01A0	30	120110
01643-31032	F2420-01A0	19	150010
01643-31032	F2420-54A0A	41	150061
01643-31032	F2760-01A0	31	150080
01643-31032	F2760-01A1	33	150081
01643-31032	F2760-01A1	39	150081
01643-31032	F2760-01A1	42	150081
01643-31032	F2760-02A0	37	150090
01643-31032	F2760-02A0	40	150090
01643-31032	F4460-01A0	10	150170
01643-31032	F4810-01A0	12	150230
01643-31032	F4810-01A0	10	150230
01643-31032	F4810-01A0	12	150230
01643-31032	H0110-01A0A	20	180010
01643-31032	H0110-01A0A	38	180010
01643-31032	H0110-01A0A	9	180010
01643-31032	H0120-01A2	4	180020
01643-31032	H0120-01A2	7	180020
01643-31032	H0120-01A4	4	180030
01643-31032	H0120-01A4	7	180030
01643-31032	H0122-01A0	32	180040
01643-31032	H0122-02A0	12	180050
01643-31032	H0122-02A0	18	180050
01643-31032	H0122-02A0	25	180050
01643-31032	H0122-02A0	9	180050
01643-31032	H2260-01A0	12	180070
01643-31032	H2260-01A0	17	180070
01643-31032	H2260-01A0	19	180070
01643-31032	H2260-01A0	7	180070
01643-31032	H2260-01A0	9	180070
01643-31032	H4200-02A0	11	180090
01643-31032	H4200-02A0	22	180090
01643-31032	H4200-03A0	17	180100
01643-31032	H4200-03A0	19	180100
01643-31032	H4200-04A2	17	180110
01643-31032	H4200-04A2	8	180110
01643-31032	H4200-06A0	17	180140
01643-31032	H4200-06A0	6	180140
01643-31032	H4200-07A0	12	180150
01643-31032	H4200-08A0	10	180160
01643-31032	H4200-08A0	15	180160
01643-31032	H4200-08A0	20	180160
01643-31032	H4200-08A0	22	180160
01643-31032	H4200-08A0	8	180160
01643-31032	H4200-09A0	37	180170
01643-31032	H4200-09A0	40	180170
01643-31032	H4200-09A0	43	180170
01643-31032	H4200-09A0	6	180170
01643-31032	H4200-09A2	37	180180
01643-31032	H4200-09A2	40	180180
01643-31032	H4200-09A2	43	180180
01643-31032	H4200-09A2	46	180180
01643-31032	H4200-09A2	6	180180
01643-31032	H4200-13A2	11	180200
01643-31032	H4200-13A2	30	180200
01643-31032	H4200-13A2	34	180200
01643-31032	H4200-13A2	9	180200
01643-31032	H4410-01A0	16	180210
01643-31032	H4410-01A0	8	180210
01643-31032	J4130-01A0	6	210050
01643-31032	J4140-01A0	6	210060
01643-31032	J4190-01A6	19	210081
01643-31032	J4190-01A7	19	210082
01643-31032	J4710-01A0	11	210100
01643-31032	J4710-01A0	5	210100
01643-31032	K0210-02A0	9C	240050
01643-31032	K0210-03A0	27	240060
01643-31032	K0210-03A0	4	240060
01643-31032	K0210-03A0	7	240060
01643-31032	K0210-03A0	9	240060
01643-31032	K0210-03A5	6	240070
01643-31032	K0210-06A5	33	240100
01643-31032	K0210-06A5	7	240100
01643-31032	K0210-07A0	5	240110
01643-31032	K0210-09A0	10	240140
01643-31032	K0210-09A0	34	240140
01643-31032	K0210-10A0	10	240150
01643-31032	K0210-10A0	28	240150
01643-31032	K0210-10A4	18	240160
01643-31032	K0210-10A4	39	240160
01643-31032	K0210-10A4	9	240160
01643-31032	K0210-12A0A	25	240190
01643-31032	K0210-12A0A	39	240190
01643-31032	K0210-12A0A	7	240190
01643-31032	K0210-13A0	11	240200
01643-31032	K0210-13A0	14	240200
01643-31032	K0210-15A0	13	240220
01643-31032	K0210-16A0	16	240230
01643-31032	K0210-16A0	3	240230
01643-31032	K0210-16A9	16	240240
01643-31032	K0210-20A5	22	240280
01643-31032	K0210-20A5	25	240280
01643-31032	K0210-20A5	28	240280
01643-31032	K0210-20A5	32	240280
01643-31032	K0210-20A5	8	240280
01643-31032	K0210-20A9	23	240290
01643-31032	K0210-20A9	26	240290
01643-31032	K0210-20A9	29	240290
01643-31032	K0210-20A9	33	240290
01643-31032	K0210-20A9	37	240290
01643-31032	K0210-20A9	40	240290
01643-31032	K0210-20A9	43	240290
01643-31032	K0210-20A9	9	240290
01643-31032	K0210-22A5	3	240310
01643-31032	K0210-27A0	30	240380
01643-31032	K0210-29A0	8	240400
01643-31032	K0210-30A0	18	240410
01643-31032	K0210-30A0	21	240410
01643-31032	K0210-32A5	5	240430
01643-31032	K0210-32A6	5	240440
01643-31032	K0210-35A0	5	240480
01643-31032	K0210-51A9	3	240530
01643-31032	K0210-53A5	25	240560
01643-31032	K0210-53A6	13	240570
01643-31032	K0210-54A5	22	240580
01643-31032	K0210-54A6	4	240590
01643-31032	K0210-55A5A	61	240600
01643-31032	K0210-56A5A	48	240610
01643-31032	K0210-57A5	9	240620
01643-31032	K0711-01A0	18	240690
01643-31032	K0711-01A0	5	240690
01643-31032	K0711-01A0	6	240690
01643-31032	K0711-02A0	12	240700
01643-31032	K0711-02A0	17	240700
01643-31032	K0711-02A0	19	240700
01643-31032	K0711-02A0	21	240700
01643-31032	K0711-02A0	8	240700
01643-31032	K0711-03A0	6	240710
01643-31032	K0711-03A0	8	240710
01643-31032	K0713-01A0	12	240720
01643-31032	K0713-01A0	16	240720
01643-31032	K4450-01A0	21	240780
01643-31032	K4450-01A0	27	240780
01643-31032	K4460-02A0	27	240800
01643-31032	K4460-02A0	30	240800
01643-31032	K4460-02A0	4	240800

PARTS N°	FIG. N°	INDEX	PAGE
01643-31032	K4460-02A0	42	240800
01643-31032	K4460-02A0	44	240800
01643-31032	K4460-03A0	16	240810
01643-31032	K4460-03A0	20	240810
01643-31032	K4460-03A0	4	240810
01643-31032	K4460-03A0	9	240810
01643-31032	K4504-01A0	10	240840
01643-31032	M4100-03A0	15	270030
01643-31032	M4100-03A0	19	270030
01643-31032	M4100-03A0	29	270030
01643-31032	M4100-03A0	34	270030
01643-31032	M4100-03A0	5	270030
01643-31032	M4100-03A0	9	270030
01643-31032	M4100-04A0	14	270040
01643-31032	M4100-04A0	23	270040
01643-31032	M4100-04A0	28	270040
01643-31032	M4100-05A0	3	270050
01643-31032	M4100-08A0	3	270070
01643-31032	M4100-08A0	6	270070
01643-31032	M4100-09A0	6	270080
01643-31032	M4100-10A0A	18	270090
01643-31032	M4100-10A0A	21	270090
01643-31032	M4100-10A0A	33	270090
01643-31032	M4100-10A0A	39	270090
01643-31032	M4100-10A0A	6	270090
01643-31032	M4210-01A1	3	270140
01643-31032	M4210-01A1	6	270140
01643-31032	M4230-01A0	12	270150
01643-31032	M4230-01A0	15	270150
01643-31032	M4230-01A0	19	270150
01643-31032	M4230-01A0	22	270150
01643-31032	M4230-01A0	25	270150
01643-31032	M4230-01A0	3	270150
01643-31032	M4230-01A0	6	270150
01643-31032	M4230-01A0	9	270150
01643-31032	M4410-01A2	5	270170
01643-31032	M4410-01A3	5	270180
01643-31032	Y1620-01A0	25	420190
01643-31232	A1610-01H6	20	030180
01643-31232	A5210-01B5	25	030770
01643-31232	B0100-01A0	6	030010
01643-31232	B0100-01A0	8	030010
01643-31232	B0110-01A0	18	030020
01643-31232	B0110-01A0	27	030020
01643-31232	B0110-01A0	3	030020
01643-31232	B0110-01A1	18	030030
01643-31232	B0110-01A1	27	030030
01643-31232	B0110-01A1	3	030030
01643-31232	B0110-02A0	11	030040
01643-31232	B0110-02A0	18	030040
01643-31232	C0110-01A0	22	060010
01643-31232	C0110-03A0	17	060030
01643-31232	C0110-04A0	23	060040
01643-31232	C0120-01A0	16	060050
01643-31232	E0200-03A1	6	120050
01643-31232	F2420-01A0	12	150010
01643-31232	F2420-01A0	9	150010
01643-31232	F2420-51A0	11	150030
01643-31232	F2420-53A0	20	150050
01643-31232	F2420-53A0	20	150050
01643-31232	F2430-01A0	13	150070
01643-31232	F2430-01A0	9	150070
01643-31232	F2760-03A0	22	150100
01643-31232	F4400-52A0	17	150140
01643-31232	F4400-52A0	26	150140
01643-31232	F4400-53A0	11	150150
01643-31232	F4400-53A0	14	150150
01643-31232	F4400-53A0	18	150150
01643-31232	F4400-54A0	9	150160
01643-31232	F4500-52A0	15	150200
01643-31232	F4500-53A0	11	150210
01643-31232	F4500-54A0	9	150220
01643-31232	H0110-01A0A	49	180010
01643-31232	H0120-01A2	9	180020
01643-31232	H0120-01A4	9	180030
01643-31232	H0122-01A0	18	180040
01643-31232	H0122-02A0	31	180050
01643-31232	H0122-02A0	5	180050
01643-31232	H0210-01A0	3	180060
01643-31232	H0210-01A0	5	180060
01643-31232	H4200-02A0	13	180090
01643-31232	H4200-02A0	2	180090
01643-31232	H4200-03A0	9	180100
01643-31232	H4200-06A0	20	180140
01643-31232	J4120-01A0	4	210030
01643-31232	J4120-01A1	4	210040
01643-31232	J4130-01A0	17	210050
01643-31232	J4130-01A0	23	210050
01643-31232	J4190-01A0	12	210070
01643-31232	J4190-01A0	7	210070
01643-31232	J4190-01A4	12	210080
01643-31232	J4190-01A4	7	210080
01643-31232	J4190-01A6	12	210081
01643-31232	J4190-01A6	16	210081
01643-31232	J4190-01A6	7	210081
01643-31232	J4190-01A7	12	210082
01643-31232	J4190-01A7	16	210082
01643-31232	J4190-01A7	7	210082
01643-31232	J4210-01A0	4	210090
01643-31232	J4210-01A0	7	210090
01643-31232	K0210-05A0	3	240090
01643-31232	K0210-06A5	5	240100
01643-31232	K0210-10A0	25	240150
01643-31232	K0210-10A4	36	240160
01643-31232	K0210-11A4	34	240180
01643-31232	K0210-12A0A	12	240190
01643-31232	K0210-12A0A	15	240190
01643-31232	K0210-16A9	10	240240
01643-31232	K0210-30A0	29	240410
01643-31232	K0210-36A0	3	240490
01643-31232	K0711-01A0	11	240690
01643-31232	K0711-01A0	9	240690
01643-31232	K0711-02A0	3	240700
01643-31232	K0711-03A0	10	240710
01643-31232	K0711-03A0	2	240710
01643-31232	K4450-01A0	14	240780
01643-31232	K4460-01A0	20	240790
01643-31232	K4460-02A0	47	240800
01643-31232	K4504-01A0	14	240840
01643-31232	K4504-01A0	3	240840
01643-31232	M4100-03A0	27	270030
01643-31232	M4100-07A0	2	270060
01643-31232	M4200-01A0	20	270130
01643-31232	M4200-01A0	15	270130
01643-31232	M4200-01A0	17	270130
01643-31232	M4200-01A0	20	270130
01643-31232	M4200-01A0	22	270130
01643-31232	M4200-01A0	3	270130
01643-31232	M4200-01A0	9	270130
01643-31232	M4210-01A1	11	270140
01643-31232	M4210-01A1	12	270140
01643-31232	M4310-01A0	3	270160
01643-31232	M4310-01A0	6	270160
01643-31232	M4510-01A3	11	270190
01643-31232	M4510-01A3	13	270190
01643-31232	T4110-03A0	3	330040
01643-31232	T4110-03A0	6	330040
01643-31445	K0210-11A0	23	240170
01643-31445	K0210-11A4	31	240180
01643-31645	F2420-01A0	3	150010
01643-31645	F2420-01A0	6	150010
01643-31645	F2420-54A0	7	150060
01643-31645	F2420-54A0A	7	150061
01643-31645	F4400-54A0	3	150160
01643-31645	F4460-01A0	14	150170
01643-31645	F4500-54A0	3	150220
01643-31645	H0122-01A0	11	180040
01643-31845	K4100-01A0	5	240750
01643-32060	M4510-01A3	7	270190
01643-32260	B0100-01A0	14	030010

PARTS Nº	FIG. Nº	INDEX	PAGE
01643-32260	F4810-01A0	7	150230
01643-32260	T4122-21A1	5	330060
01643-32260	T4130-01A1	17	330070
01643-32260	T4130-01A1	6	330070
01643-32460	F4400-01A0	3	150120
01643-32460	F4400-01A0	6	150120
01643-32460	F4500-01A0	3	150180
01643-32460	J4210-01A0	15	210090
01643-32460	K4100-01A0	2	240750
01643-32460	M4510-01A3	3	270190
01643-50823	H4200-01A0	19	180080
01643-50823	K0210-01A0	3	240040
01643-50823	K4460-02A0	13	240800
01643-50823	M4100-05A0	17	270050
01643-50823	Y1610-33A0	20	420170
01643-50823	Y1610-34A0	18	420180
01643-51032	H0110-01A0A	36	180010
01643-51032	H4200-01A0	5	180080
01643-51032	H4200-03A0	4	180100
01643-51032	H4200-06A0	10	180140
01643-51032	H4200-06A0	13	180140
01643-51032	H4200-08A0	5	180160
01643-51032	H4200-13A2	18	180200
01643-51032	H4200-13A2	26	180200
01643-51032	Y1610-32A0	16	420160
01643-51032	Y1610-33A0	16	420170
01643-51032	Y1610-34A0	13	420180
01643-51232	F2420-52A0	33	150040
01643-51232	F2760-02A0	12	150090
01643-51232	F2760-02A0	20	150090
01643-51232	F2760-02A0	24	150090
01643-51232	F2760-02A0	29	150090
01643-51232	F2760-02A0	34	150090
01643-51232	F2760-02A0	4	150090
01643-51232	F4400-53A0	23	150150
01643-51232	F4500-53A0	16	150210
01643-51232	H0210-01A0	14	180060
01643-51232	K0110-01A7	6	240010
01643-51232	K0110-01A8	6	240020
01643-51232	K0110-01A9	6	240021
01643-51232	K0160-01A4	1	240030
01643-51232	Y1610-32A0	12	420160
01643-51232	Y1610-33A0	12	420170
01643-70623	K0210-05A0	7	240090
01643-70623	K0210-27A0	21	240380
01643-70623	K0210-52A5	10	240540
01643-70623	K0210-52A6	7	240550
01643-70623	K0210-53A5	3	240560
01643-70623	K0210-53A6	3	240570
01643-70823	M4100-04A0	8	270040

PARTS Nº	FIG. Nº	INDEX	PAGE
01643-71032	E0120-02A1	22	120030
01643-71032	E0120-02A1	25	120030
01643-71032	E0120-02A1	3	120030
01643-71032	K0210-12A0A	8	240190
01843-31232	K0110-01A7	8	240010
01843-31232	K0110-01A8	8	240020
01843-31232	K0110-01A9	8	240021
02030-70444	K0210-53A5	2	240560
02030-70444	K0210-53A6	2	240570
02030-70719	K0160-01A4	4	240030
02030-70719	K0210-04A0	7	240080
02030-70719	K0210-07A0	3	240110
02030-70725	K0110-01A7	5	240010
02030-70725	K0110-01A8	5	240020
02030-70725	K0110-01A9	5	240021
02090-11475	T4122-21A1	3	330060
02290-11422	T4122-21A1	4	330060
02290-11422	T4130-01A1	14	330070
02290-11422	T4130-01A1	16	330070
02290-11422	T4130-01A1	5	330070
02721-00813	A2219-01B4	9	030340
02753-00205	K4460-02A0	8	240800
02753-00510	H4200-10A2	1	180190
02755-00304	K0210-12A0A	32	240190
02760-00203	H0122-01A0	28	180040
02762-00510	F2760-03A0	13	150100
02762-006A6	F2760-01A1	28	150081
02763-004A7	H4200-09A0	29	180170
02763-004A7	H4200-09A2	29	180180
02765-B02A3	K4460-02A0	9	240800
02765-B0405	H0122-01A0	21	180040
02766-00207	H4410-01A0	12	180210
02766-00208	H4410-01A0	13	180210
02766-B04A6	H4410-01A0	1	180210
02781-00210	H0110-01A0A	25	180010
02781-00210	K4450-01A0	28	240780
02781-00311	K4470-01A0	9	240830
02781-0031D	K4450-01A0	32	240780
02781-00422	F2760-03A0	24	150100
02781-00422	F2760-03A0	4	150100
02781-00522	H0110-01A0A	30	180010
02781-00628	H0120-01A2	15	180020
02781-00628	H0120-01A4	15	180030
02781-00628	H0122-02A0	21	180050
02782-10210	K4450-01A0	4	240780
02782-10311	K4470-01A0	3	240830
02782-10420	F2760-03A0	27	150100
02782-10422	F2760-03A0	5	150100
02782-10422	H4200-07A0	8	180150
02782-10422	H4200-09A0	19	180170

PARTS Nº	FIG. Nº	INDEX	PAGE
02782-10422	H4200-09A2	19	180180
02782-10422	J4140-01A0	7	210060
02782-10516	F2760-03A0	14	150100
02782-10518	F2760-01A0	15	150080
02782-10518	F2760-01A1	15	150081
02782-10520	F2760-01A0	11	150080
02782-10520	F2760-01A1	11	150081
02782-10524	F2760-03A0	17	150100
02782-10632	F2760-01A1	43	150081
02782-50210	H0120-01A2	28	180020
02782-50210	H0120-01A2	41	180020
02782-50210	H4200-09A0	7	180170
02782-50210	H4200-09A2	7	180180
02783-10628	H0120-01A2	16	180020
02783-10628	H0120-01A4	16	180030
02789-00628	H4200-04A2	3	180110
02789-10628	H4200-04A2	5	180110
02896-11008	C0110-04A0	31	060040
02896-11008	H0110-01A0A	27	180010
02896-11008	H0110-01A0A	43	180010
02896-11008	H0120-01A2	35	180020
02896-11008	H0120-01A2	44	180020
02896-11008	H0120-01A4	34	180030
02896-11008	H0122-01A0	24	180040
02896-11008	H0122-01A0	29	180040
02896-11008	H4200-09A0	9	180170
02896-11008	H4200-09A2	9	180180
02896-11008	H4410-01A0	20	180210
02896-11008	K0210-10A4	21	240160
02896-11008	K0210-11A0	4	240170
02896-11008	K0210-11A0	8	240170
02896-11008	K0210-11A4	12	240180
02896-11008	K0210-11A4	23	240180
02896-11008	K0210-11A4	3	240180
02896-11008	K0210-11A4	7	240180
02896-11008	K0210-12A0A	28	240190
02896-11008	K0210-28A0	8	240390
02896-11008	K4450-01A0	30	240780
02896-11008	K4460-01A0	4	240790
02896-11008	K4460-02A0	7	240800
02896-11009	H0110-01A0A	24	180010
02896-11009	H0110-01A0A	44	180010
02896-11009	H0120-01A2	35A	180020
02896-11009	H0120-01A4	34A	180030
02896-11009	H4200-09A0	20	180170
02896-11009	H4200-09A2	20	180180
02896-11009	K0210-12A0A	31	240190
02896-11009	K0210-12A0A	36	240190
02896-11009	K0210-13A0	7	240200

PARTS Nº	FIG. Nº	INDEX	PAGE
02896-11009	K0210-13A0	8	240200
02896-11009	K4450-01A0	24	240780
02896-11009	K4450-01A0	34	240780
02896-11009	K4460-01A0	11	240790
02896-11009	K4460-03A0	2	240810
02896-11009	K4460-03A0	8	240810
02896-11009	K4470-01A0	11	240830
02896-11009	K4470-01A0	5	240830
02896-11012	C0110-04A0	30	060040
02896-11012	F2760-03A0	7	150100
02896-11012	H0110-01A0A	23	180010
02896-11012	H0122-01A0	36	180040
02896-11012	H4200-07A0	10	180150
02896-11012	H4200-09A0	34	180170
02896-11012	H4200-09A2	34	180180
02896-11012	H4410-01A0	5	180210
02896-11012	H4410-01A0	6	180210
02896-11012	J4140-01A0	3	210060
02896-11012	J4140-01A0	9	210060
02896-11012	K0210-28A0	5	240390
02896-11012	K4460-01A0	8	240790
02896-11012	K4460-02A0	17	240800
02896-11012	K4460-02A0	33	240800
02896-11012	K4460-03A0	22	240810
02896-11012	Y1622-01A0	23	420210
02896-11015	F2760-01A0	13	150080
02896-11015	F2760-01A0	19	150080
02896-11015	F2760-01A0	7	150080
02896-11015	F2760-01A1	13	150081
02896-11015	F2760-01A1	19	150081
02896-11015	F2760-01A1	7	150081
02896-11015	H0110-01A0A	45	180010
02896-11015	H4200-04A2	4	180110
02896-11015	Y1620-01A0	17	420190
02896-11015	Y1620-01A0	20	420190
02896-11018	F2760-01A0	27	150080
02896-11018	F2760-01A1	27	150081
02896-11018	F2760-01A1	45	150081
02896-11018	H0120-01A2	18	180020
02896-11018	H0120-01A2	21	180020
02896-11018	H0120-01A2	40	180020
02896-11018	H0120-01A4	18	180030
02896-11018	H0120-01A4	21	180030
02896-11018	H0122-01A0	42	180040
02896-11018	H0122-02A0	13	180050
02896-11018	H0210-01A0	12	180060
02896-11018	H4200-01A0	9	180080
02896-11018	Y1620-11A0	22	420200
02896-11018	Y1620-11A0	24	420200
02896-21012	C0400-01A0A	2	060060

PARTS Nº	FIG. Nº	INDEX	PAGE
02896-21012	F2760-03A0	26	150100
02896-21012	F2760-03A0	29	150100
02896-21015	F2760-03A0	16	150100
02896-21015	F2760-03A0	19	150100
04020-00514	Y1610-34A0	14	420180
04020-00820	Y1610-33A0	8	420170
04020-01024	Y1610-31A0	4	420150
04020-01024	Y1610-32A0	4	420160
04020-01024	Y1610-33A0	9	420170
04020-01228	F2420-51A0	4	150030
04020-01228	F2420-52A0	7	150040
04020-01228	F2420-53A0	9	150050
04020-01228	F2420-54A0	23	150060
04020-01228	F2420-54A0A	23	150061
04020-01228	F4400-53A0	9	150150
04020-01228	F4400-54A0	1	150160
04020-01228	F4500-53A0	9	150210
04020-01228	F4500-54A0	1	150220
04025-00520	K0210-10A0	13	240150
04025-00520	K0210-10A4	24	240160
04025-00632	M4410-01A2	7	270170
04025-00632	M4410-01A3	7	270180
04050-11212	A4510-01A5	12	030680
04050-11612	K0210-01A0	12	240040
04050-11612	K0210-27A0	23	240380
04050-11612	M4100-02A0	7	270020
04050-12015	M4100-03A0	31	270030
04050-12015	M4100-04A0	20	270040
04050-13020	F4460-01A0	6	150170
04050-18055	J4190-01A0	3	210070
04050-18055	J4190-01A4	3	210080
04050-18055	J4190-01A6	3	210081
04050-18055	J4190-01A7	3	210082
04052-10633	K0210-55A5A	42	240600
04052-10633	K0210-56A5A	29	240610
04052-10833	E0120-01A1	10	120020
04052-10833	E0120-01A1	24	120020
04052-11038	C0110-01A0	25	060010
04052-11038	C0110-04A0	24	060040
04064-04518	F2420-52A0	21	150040
04064-06020	F2420-54A0	15	150060
04064-06020	F2420-54A0A	15	150061
04064-07525	F2420-53A0	22	150050
04065-01104	F4400-52A0	22	150140
04065-01410	H4200-09A0	14	180170
04065-01410	H4200-09A2	14	180180
04065-03012	Y1610-34A0	11	420180
04065-03212	H4200-07A0	3	180150
04065-04018	Y1610-31A0	15	420150
04065-04218	H0110-01A0A	41	180010

PARTS Nº	FIG. Nº	INDEX	PAGE
04065-08025	F2420-52A0	19	150040
04065-08025	F2420-52A0	22	150040
04065-09030	F2420-53A0	16	150050
04071-00200	F2420-52A0	8	150040
04120-21744	K0711-01A0	19	240690
04205-10620	K0210-27A0	22	240380
04205-11028	F4460-01A0	4	150170
04210-20624	K0210-27A0	25	240380
04248-50625	A4510-01A5	13	030680
04250-60639	A4510-01A5	10	030680
04256-40615	K0210-10A0	18	240150
04256-40615	K4410-01A0	9	240770
04256-40616	K0210-10A0	18	240150
04256-40616	K0210-10A4	29	240160
04256-41230	K0210-12A0A	10	240190
04256-41230	K0210-12A0A	13	240190
04256-50616	K0210-10A0	22	240150
04256-50616	K0210-10A4	33	240160
04260-00635	F2420-53A0	8	150050
04418-13060	F2420-51A0	13	150030
04418-13060	F4400-51A0	19	150130
04418-13060	F4500-51A0	19	150190
04418-13060	J4110-01A1	3	210010
04418-13060	K0210-36A0	5	240490
04418-13060	K0210-36A1	1	240491
04418-13060	T4120-01A1	1A	330050
04434-50508	A411S-01C0	29	030630
04434-50510	J4710-01A0	3	210100
04434-50510	J4710-01A0	9	210100
04434-50610	D0100-01A0	6	090010
04434-50610	K0210-12A0A	43	240190
04434-50810	M4100-04A0	31	270040
04434-50812	M4100-10A0A	16	270090
04434-50812	M4100-10A0A	3	270090
04434-51010	A5210-01B5	26	030770
04434-51010	M4100-04A0	30	270040
04434-51012	B0110-01A0	22	030020
04434-51012	B0110-01A0	31	030020
04434-51012	B0110-01A0	36	030020
04434-51012	B0110-01A0	39	030020
04434-51012	B0110-01A1	22	030030
04434-51012	B0110-01A1	31	030030
04434-51012	B0110-01A1	36	030030
04434-51012	E0200-01A4	4	120040
04434-51012	E0202-01A2	10	120060
04434-51012	E0202-01A2	13	120060
04434-51012	F4400-53A0	16	150150
04434-51012	M4100-04A0	25	270040
04434-51210	H2260-01A0	15	180070
04434-51210	K4450-01A0	19	240780

PARTS N°	FIG. N°	INDEX	PAGE
04434-51210	K4460-03A0	5	240810
04434-51210	M4100-10A0A	13	270090
04434-51310	H4410-01A0	14	180210
04434-51310	K0210-53A5	23	240560
04434-51310	K0210-53A6	11	240570
04434-51312	K4450-01A0	12	240780
04434-51410	D0100-01A0	29	090010
04434-51412	B0110-01A0	19	030020
04434-51412	B0110-01A0	28	030020
04434-51412	B0110-01A0	32	030020
04434-51412	B0110-01A1	19	030030
04434-51412	B0110-01A1	28	030030
04434-51412	B0110-01A1	32	030030
04434-51412	E0202-04A0	2	120090
04434-51412	M4100-04A0	24	270040
04434-51510	D0100-01A0	37	090010
04434-51510	K4460-03A0	11	240810
04434-51610	H4200-09A0	38	180170
04434-51610	H4200-09A2	38	180180
04434-51610	K0210-12A0A	38	240190
04434-51610	K0210-13A0	12	240200
04434-51610	K0210-16A0	14	240230
04434-51610	K4450-01A0	25	240780
04434-51610	K4460-02A0	39	240800
04434-51612	K0711-02A0	9	240700
04434-51710	H0122-02A0	15	180050
04434-51710	M4100-10A0A	10	270090
04434-51712	E0200-01A4	5	120040
04434-51712	E0202-01A2	11	120060
04434-51712	E0202-01A2	9	120060
04434-51810	M4100-10A0A	19	270090
04434-51812	H0122-01A0	30	180040
04434-51912	B0110-01A0	13	030020
04434-51912	B0110-01A1	13	030030
04434-51912	B0110-01A1	39	030030
04434-51912	B0110-02A0	2	030040
04434-51912	C0400-01A0A	10	060060
04434-51912	C0400-01A0A	14	060060
04434-51912	C0400-01A0A	19	060060
04434-51912	C0400-01A0A	7	060060
04434-51912	E0202-01A2	8	120060
04434-51912	E0202-04A0	3	120090
04434-51912	F4460-01A0	7	150170
04434-51912	H2260-01A0	5	180070
04434-51912	K0210-20A5	5	240280
04434-51912	K0210-20A9	5	240290
04434-51912	K0210-20A9	6	240290
04434-51912	K0711-02A0	4	240700
04434-52110	K0210-27A0	27	240380
04434-52112	K0711-02A0	10	240700
04434-52112	K0711-02A0	5	240700
04434-52310	D0100-01A0	33	090010
04434-52310	F2760-01A0	29	150080
04434-52310	F2760-01A0	33	150080
04434-52310	F2760-01A1	31	150081
04434-52310	F2760-01A1	35	150081
04434-52312	E0200-01A4	6	120040
04434-52312	E0202-01A2	7	120060
04434-52312	F2760-03A0	20	150100
04434-52312	K0210-20A5	6	240280
04434-52312	K0210-20A9	7	240290
04434-52312	K0713-01A0	9	240720
04434-52511	H2260-01A0	3	180070
04434-52512	E0202-04A0	5	120090
04434-52711	K4460-03A0	18	240810
04434-52712	B0110-01A0	5	030020
04434-52712	B0110-01A0	9	030020
04434-52712	B0110-01A1	5	030030
04434-52712	B0110-01A1	9	030030
04434-52712	C0400-01A0A	15	060060
04434-52712	C0400-01A0A	20	060060
04434-52712	C0400-01A0A	3	060060
04434-52712	C0400-01A0A	8	060060
04434-52712	H4200-03A0	6	180100
04434-52712	K0711-02A0	13	240700
04434-53212	K0210-20A5	2	240280
04434-53212	K0210-20A9	2	240290
04434-53412	K0210-20A5	3	240280
04434-53412	K0210-20A5	30	240280
04434-53412	K0210-20A9	3	240290
04434-53412	K0210-20A9	31	240290
04434-53412	M4100-04A0	26	270040
04435-50812	K0350-01A0	5	240670
04435-51210	H4200-09A2	44	180180
04435-51510	H4200-09A0	41	180170
04435-51510	H4200-09A2	41	180180
06040-06010	F2420-52A0	18	150040
06040-06010	F2420-52A0	20	150040
06040-06011	F2420-53A0	15	150050
06043-06009	F2420-52A0	23	150040
06120-02520	F2420-54A0	29	150060
06120-02520	F2420-54A0A	29	150061
06124-02520	K0210-12A0A	22	240190
06301-06310	F4400-52A0	20	150140
06330-06205	A502P-01D2	4	030730
06347-06207	A502P-01D2	3	030730
07000-02015	K0210-11A4	20	240180
07000-02018	K0210-11A0	11	240170
07000-02018	K0210-11A0	20	240170
07000-02018	K0210-11A4	10	240180
07000-02070	Y1670-01A0	3	420340
07000-11006	B9999-01R1	2	030980
07000-11007	B9999-01R1	3	030980
07000-12011	C0110-01A0	6	060010
07000-12011	C0110-04A0	10	060040
07000-12011	F2430-01A0	14	150070
07000-12011	F2430-01A0	16	150070
07000-12011	K0210-11A4	27	240180
07000-12011	K0210-11A4	29	240180
07000-12011	K0210-12A0A	27	240190
07000-12011	K0210-12A0A	30	240190
07000-12011	K0210-13A0	4	240200
07000-12011	K4450-01A0	18	240780
07000-12011	K4450-01A0	22	240780
07000-12011	K4460-01A0	3	240790
07000-12011	K4460-02A0	6	240800
07000-12014	H4410-01A0	19	180210
07000-12014	K0210-12A0A	35	240190
07000-12014	K4460-01A0	10	240790
07000-12015	K0210-10A4	20	240160
07000-12018	C0110-01A0	5	060010
07000-12018	C0110-04A0	9	060040
07000-12018	F2760-01A0	10	150080
07000-12018	F2760-01A0	18	150080
07000-12018	F2760-01A0	6	150080
07000-12018	F2760-01A1	10	150081
07000-12018	F2760-01A1	18	150081
07000-12018	F2760-01A1	6	150081
07000-12018	F2760-03A0	11	150100
07000-12018	H4200-09A0	33	180170
07000-12018	H4200-09A2	33	180180
07000-12018	K0210-10A4	20	240160
07000-12018	K4460-01A0	7	240790
07000-12021	K4460-02A0	11	240800
07000-12021	K4460-02A0	16	240800
07000-12040	F4400-54A0	7	150160
07000-12040	F4500-54A0	7	150220
07000-12045	H0210-01A0	10	180060
07000-12065	B9999-01R1	4	030980
07000-12065	Y1622-01A0	11	420210
07000-12070	Y1622-01A0	13	420210
07000-12115	Y1620-01A0	9	420190
07000-12120	Y1620-01A0	11	420190
07000-12125	Y1620-11A0	10	420200
07000-12130	Y1620-11A0	9	420200
07000-13024	F2760-01A0	26	150080
07000-13024	F2760-01A1	26	150081
07000-13024	Y1663-02A0	6	420330
07000-13025	H4200-01A0	16	180080
07000-13025	H4200-13A2	15	180200

PARTS N°	FIG. N°	INDEX	PAGE
07000-13025	H4200-13A2	22	180200
07000-13030	H4200-01A0	8	180080
07000-13032	F2760-02A0	14	150090
07000-13032	F2760-02A0	6	150090
07000-13032	H4200-01A0	2	180080
07000-13032	H4200-06A0	3	180140
07000-13032	H4200-08A0	3	180160
07000-13035	F2760-02A0	1	150090
07000-13035	F2760-02A0	21	150090
07000-13035	H0110-01A0A	34	180010
07000-13035	H4200-08A0	13	180160
07000-13038	F2760-01A0	4	150080
07000-13038	F2760-01A1	4	150081
07000-13038	H0110-01A0A	33	180010
07000-13038	H4200-06A0	8	180140
07000-13038	Y1663-01A0	4	420320
07000-13042	F4400-52A0	13	150140
07000-13042	F4500-52A0	12	150200
07000-13048	H0210-01A0	11	180060
07000-13050	H0110-01A0A	39	180010
07000-13050	Y1663-01A0	5	420320
07000-15090	V0300-01A3	12	390030
07000-15115	F4400-52A0	14	150140
07000-15160	F4400-52A0	18	150140
07000-15160	F4500-52A0	16	150200
07000-15200	H0110-01A0A	10	180010
07000-72040	F2420-54A0A	39	150061
07000-72055	F2420-54A0	8	150060
07000-72055	F2420-54A0A	8	150061
07000-72110	A261P-01A1	3	030420
07000-72110	A8126-02A1	2	030930
07000-73025	F2420-52A0	31	150040
07000-73042	F2420-54A0	35	150060
07000-73042	F2420-54A0A	35	150061
07000-75130	F2420-51A0	12	150030
07000-A2055	F2420-52A0	27	150040
07000-A2065	F2420-01A0	17	150010
07000-A2145	F2430-01A0	11	150070
07000-A2145	F2430-01A0	7	150070
07000-A5220	F2420-52A0	15	150040
07000-A6165	F2420-52A0	11	150040
07000-A6210	F2420-52A0	12	150040
07000-E2021	Y1610-33A0	18	420170
07000-F2022	Y1663-02A0	2	420330
07002-01023	H0120-01A4	36	180030
07002-01423	K0210-11A4	32	240180
07002-02034	K0210-11A0	5	240170
07002-02034	K0210-11A0	7	240170
07002-02034	K0210-11A4	4	240180
07002-02034	K0210-11A4	6	240180
07002-11023	F2430-01A0	18	150070
07002-11023	H0120-01A2	37	180020
07002-11023	H0120-01A2	45	180020
07002-11023	H4200-09A0	12	180170
07002-11023	H4200-09A2	12	180180
07002-11023	K0210-13A0	2	240200
07002-11023	K4450-01A0	8	240780
07002-11023	K4460-01A0	13	240790
07002-11023	K4460-02A0	20	240800
07002-11023	T4150-01A0	10	330090
07002-11023	Y1620-11A0	21	420200
07002-11023	Y1622-01A0	5	420210
07002-11423	F4400-54A0	11	150160
07002-11423	F4500-54A0	11	150220
07002-11423	H0110-01A0A	26	180010
07002-11423	H0120-01A2	34	180020
07002-11423	H0120-01A2	43	180020
07002-11423	H0120-01A4	33	180030
07002-11423	H4200-09A0	8	180170
07002-11423	H4200-09A2	8	180180
07002-11423	K0210-11A0	12	240170
07002-11423	K0210-12A0A	42	240190
07002-11423	K4450-01A0	29	240780
07002-11423	K4450-01A0	33	240780
07002-11423	K4450-01A0	5	240780
07002-11423	K4460-02A0	36	240800
07002-11423	K4470-01A0	10	240830
07002-11423	K4470-01A0	4	240830
07002-12034	F2760-01A0	16	150080
07002-12034	F2760-01A1	12	150081
07002-12034	F2760-01A1	16	150081
07002-12034	F2760-03A0	28	150100
07002-12034	F2760-03A0	6	150100
07002-12034	H0110-01A0A	42	180010
07002-12034	H4200-07A0	9	180150
07002-12034	H4200-09A0	10	180170
07002-12034	H4200-09A0	13	180170
07002-12034	H4200-09A0	4	180170
07002-12034	H4200-09A2	10	180180
07002-12034	H4200-09A2	13	180180
07002-12034	H4200-09A2	4	180180
07002-12034	J4140-01A0	8	210060
07002-12034	Y1663-01A0	32	420320
07002-12434	F2420-51A0	7	150030
07002-12434	F2760-01A0	12	150080
07002-12434	H0110-01A0A	22	180010
07002-12434	H0110-01A0A	31	180010
07002-12434	H0110-01A0A	5	180010
07002-12434	H0120-01A2	17	180020
07002-12434	H0120-01A2	20	180020
07002-12434	H0120-01A2	39	180020
07002-12434	H0120-01A4	17	180030
07002-12434	H0120-01A4	20	180030
07002-12434	H0122-02A0	22	180050
07002-12434	H0210-01A0	18	180060
07002-12434	K4460-02A0	21	240800
07002-12434	K4460-02A0	31	240800
07002-12434	Y1663-01A0	9	420320
07002-13034	F4400-54A0	5	150160
07002-13034	F4500-54A0	5	150220
07002-13034	H4410-01A0	11	180210
07002-13034	Y1663-01A0	13	420320
07002-13034	Y1663-01A0	28	420320
07002-13034	Y1663-02A0	8	420330
07002-13334	F2760-01A1	30	150081
07002-13334	F2760-01A1	44	150081
07002-13334	H0120-01A2	23	180020
07002-13334	H0120-01A2	26	180020
07002-13334	H0120-01A4	23	180030
07002-13334	H0120-01A4	25	180030
07002-13334	H0122-02A0	20	180050
07002-13334	H4200-07A0	5	180150
07002-13334	Y1663-01A0	30	420320
07002-13334	Y1663-02A0	4	420330
07002-13634	F4400-53A0	2	150150
07002-13634	F4400-53A0	7	150150
07002-13634	F4500-53A0	2	150210
07002-13634	F4500-53A0	7	150210
07002-13634	H4200-07A0	7	180150
07002-15234	H0110-01A0A	3	180010
07002-15234	K4460-02A0	24	240800
07002-21823	F2760-03A0	25	150100
07002-22034	F2760-03A0	15	150100
07002-22434	F2760-03A0	18	150100
07002-61623	F2420-54A0	38	150060
07005-01012	A408P-01B0	14	030590
07005-01012	A408P-01B1	14	030600
07005-01012	A8126-01A1	1	030920
07005-01012	A8126-02A1	2	030930
07005-01212	A401R-01B2	4	030570
07005-01212	A411R-01A7	4	030620
07005-01212	A417P-01B4	6	030640
07005-01212	A8126-01A1	1	030920
07005-01212	A8126-01A1	1	030920
07005-01212	F2420-54A0A	44	150061
07005-01412	A5210-01B5	16	030770
07005-01412	A5210-01B5	21	030770
07005-01412	A5210-01B5	30	030770
07005-01412	A8126-01A1	1	030920
07005-01412	D0100-02A0	11	090020

PARTS Nº	FIG. Nº	INDEX	PAGE
07005-01412	D0100-02A0	6	090020
07005-01412	K0210-57A5	7	240620
07005-02012	F2420-54A0A	43	150061
07005-02216	A2119-01B7	10	030320
07005-02216	A8126-02A1	2	030930
07012-50075	F2420-54A0	3	150060
07012-50075	F2420-54A0A	3	150061
07018-00251	F2420-52A0	24	150040
07018-00703	F2420-52A0	29	150040
07020-00000	J4130-01A0	18	210050
07020-00000	J4710-01A0	6	210100
07020-00000	T4110-01A0	13	330010
07020-00000	T4110-01A0	20	330010
07020-00000	T4110-01A1	13	330020
07020-00000	T4110-01A1	20	330020
07020-00000	T4140-01A0	9	330080
07020-00000	V0100-01A1	4	390010
07020-00000	Y1620-11A0	15	420200
07020-00000	Y1622-01A0	21	420210
07020-00675	J4710-01A0	15	210100
07020-00675	T4110-01A0	15	330010
07020-00675	T4110-01A0	9	330010
07020-00675	T4110-01A1	15	330020
07020-00675	T4110-01A1	9	330020
07020-00675	V0100-01A1	5	390010
07020-00675	Y1622-01A0	22	420210
07020-00900	J4130-01A0	24	210050
07020-00900	T4140-01A0	4	330080
07020-00900	T4150-01A0	8	330090
07020-00900	V0100-01A1	6	390010
07030-00252	F2420-51A0	8	150030
07030-01030	F4400-51A0	20	150130
07030-01030	F4500-51A0	20	150190
07040-11007	H0120-01A2	36	180020
07040-11007	H0120-01A2	46	180020
07040-11007	H0120-01A4	35	180030
07040-11007	H4200-09A0	11	180170
07040-11007	H4200-09A2	11	180180
07040-11007	K0210-13A0	3	240200
07040-11007	K4450-01A0	7	240780
07040-11007	K4460-01A0	12	240790
07040-11007	Y1620-11A0	20	420200
07040-11007	Y1622-01A0	4	420210
07040-11409	F4400-54A0	10	150160
07040-11409	F4500-54A0	10	150220
07040-12412	H0110-01A0A	4	180010
07040-13316	H4200-07A0	4	180150
07040-13316	Y1663-01A0	29	420320
07041-13612	F4400-53A0	6	150150
07041-13612	F4500-53A0	6	150210
07041-13612	H4200-07A0	6	180150
07042-00108	A151V-01A2	2	030130
07043-70108	A153V-01A0	2	030150
07043-70211	F4400-53A0	3	150150
07043-70211	F4500-53A0	3	150210
07043-A0211	F2420-51A0	5	150030
07044-12412	F2420-51A0	6	150030
07044-13620	F4400-53A0	1	150150
07044-13620	F4500-53A0	1	150210
07046-22216	A502P-01D2	7	030730
07049-00811	E0202-03A2	8	120080
07049-01012	J4110-01A2	2	210020
07049-01012	K0210-20A5	12	240280
07049-01012	K0210-20A5	17	240280
07049-01012	K0210-20A9	13	240290
07049-01012	K0210-20A9	18	240290
07049-01012	M4100-01A0	14	270010
07049-01012	M4410-01A2	12	270170
07049-01012	M4510-01A3	14	270190
07049-01012	T4110-01A1	24	330020
07049-01215	F2420-51A0	14	150030
07049-01215	J4120-01A0	7	210030
07049-01620	F2420-51A0	15	150030
07049-01620	F4460-01A0	15	150170
07049-02734	K0210-16A9	5	240240
07095-20211	E0202-01A2	12	120060
07095-20211	H0122-02A0	16	180050
07095-20213	F4460-01A0	8	150170
07095-20314	K0711-02A0	15	240700
07095-20318	E0202-04A0	4	120090
07095-20318	H2260-01A0	4	180070
07095-20420	B0110-01A0	10	030020
07095-20420	B0110-01A0	6	030020
07095-20420	B0110-01A1	10	030030
07095-20420	B0110-01A1	6	030030
07095-20420	C0400-01A0A	16	060060
07095-20420	C0400-01A0A	21	060060
07095-20420	C0400-01A0A	6	060060
07095-20420	C0400-01A0A	9	060060
07095-20420	K0711-02A0	14	240700
07095-20420	K4460-03A0	21	240810
07125-00613	H4200-13A2	19	180200
07146-02066	Y1622-01A0	12	420210
07146-02116	Y1620-01A0	10	420190
07146-02126	Y1620-11A0	11	420200
07156-00710	Y1622-01A0	19	420210
07156-01215	Y1620-01A0	15	420190
07156-01315	Y1620-11A0	18	420200
07177-04025	Y1622-01A0	7	420210
07179-12052	Y1622-01A0	10	420210
07179-12079	Y1620-01A0	8	420190
07179-12079	Y1620-11A0	8	420200
07206-30710	A408P-01B0	13	030590
07206-30710	A408P-01B1	13	030600
07206-30812	F2420-54A0A	46	150061
07206-31014	A5210-01B5	15	030770
07206-31014	A5210-01B5	20	030770
07206-31014	A5210-01B5	29	030770
07206-31014	D0100-02A0	12	090020
07206-31014	D0100-02A0	7	090020
07214-70510	J4710-01A0	12	210100
07214-70510	J4710-01A0	14	210100
07217-70510	J4710-01A0	2	210100
07217-70510	J4710-01A0	7	210100
07260-02650	F2760-01A0	1	150080
07260-02650	F2760-01A1	1	150081
07260-04725	H0210-01A0	7	180060
07260-20945	A5210-01B5	32	030770
07260-21440	F2420-54A0	41	150060
07270-20760	D0100-02A0	8	090020
07270-21090	D0100-01A0	20	090010
07281-00197	A5210-01B5	31	030770
07281-00359	A153T-01C6	6	030140
07281-00489	K0210-32A6	27	240440
07283-23450	H0122-02A0	6	180050
07283-26155	K0711-03A0	4	240710
07283-32236	H4200-04A2	6	180110
07283-32244	Y1620-01A0	22	420190
07283-32738	E0200-01A4	17	120040
07283-32746	H4200-13A2	27	180200
07283-33442	K0210-10A0	27	240150
07283-33442	K0210-10A4	38	240160
07283-33450	F2760-02A0	38	150090
07283-33450	H4200-06A0	14	180140
07283-52232	H4200-04A2	9	180110
07283-52232	Y1620-01A0	23	420190
07283-52737	E0200-01A4	18	120040
07283-52737	H4200-13A2	28	180200
07283-53444	F2760-02A0	39	150090
07283-53444	H0122-02A0	7	180050
07283-53444	H4200-06A0	15	180140
07285-00080	D0100-01A0	15	090010
07285-00080	D0100-01A0	32	090010
07285-00100	D0100-02A0	9	090020
07285-00115	M4100-10A0A	8	270090
07285-00130	D0100-01A0	21	090010
07285-00150	K0210-09A0	36	240140
07285-00155	K0210-09A0	36	240140
07285-00220	A2060-01B5	2	030260
07286-01990	A2060-01B5	1	030260

PARTS Nº	FIG. Nº	INDEX	PAGE
07287-00812	M4100-10A0A	7	270090
07289-00045	F2760-01A0	2	150080
07289-00045	F2760-01A1	2	150081
07289-00045	K0210-02A0	6	240050
07289-00055	C0120-01A0	10	060050
07289-00070	C0120-01A0	9	060050
07289-00070	H0210-01A0	8	180060
07289-00120	M4100-09A0	3	270080
07299-00070	C0120-01A0	11	060050
07299-00105	A1410-01D3	25	030100
07371-30400	K4460-02A0	12	240800
07371-30638	H4200-01A0	17	180080
07371-30640	H4200-13A2	16	180200
07371-30640	H4200-13A2	24	180200
07371-31049	H4200-01A0	3	180080
07371-31049	H4200-06A0	11	180140
07371-31049	H4200-08A0	6	180160
07372-21035	H4200-01A0	4	180080
07372-21035	H4200-06A0	9	180140
07372-21035	H4200-08A0	4	180160
07372-21035	H4200-13A2	17	180200
07372-21035	H4200-13A2	25	180200
07372-21040	H4200-06A0	12	180140
07372-21240	F2760-02A0	11	150090
07372-21240	F2760-02A0	19	150090
07372-21240	F2760-02A0	23	150090
07372-21240	F2760-02A0	3	150090
07372-21245	F2760-02A0	17	150090
07372-21245	F2760-02A0	28	150090
07372-21245	F2760-02A0	33	150090
07372-21245	F2760-02A0	9	150090
07373-20400	K4460-02A0	15	240800
07373-30600	H4200-01A0	14	180080
07378-10600	H4200-13A2	23	180200
07950-10450	V0300-01A3	1	390030
07950-90403	V0300-01A3	3	390030
07951-41017	V0300-01A3	2	390030
07952-70004	V0300-01A3	1	390030
08000-00000	E0110-01A0	2	120010
08000-00001	E0110-01A0	3	120010
08007-03538	E0120-01A1	34	120020
08017-30702	K0210-30A0	31	240410
08017-30710	E0201-01A0	19	120051
08028-AB030	K0210-22A5	1	240310
08028-CB040	B0110-02A0	5	030040
08034-00310	Y1670-01A0	6	420340
08034-20310	Y1670-01A0	7	420340
08034-20519	B0110-01A1	47	030030
08034-20519	K0210-20A5	9	240280
08034-20519	K0210-20A9	10	240290
08034-20536	K0210-30A0	30	240410
08034-40521	B0110-01A0	46	030020
08034-40521	B0110-01A1	44	030030
08034-40521	E0201-01A0	17	120051
08034-40521	K0210-19A0	4	240270
08034-40521	M4410-01A2	8	270170
08034-40521	M4410-01A3	8	270180
08036-00814	K0210-16A0	1	240230
08037-01008	K0210-55A5A	43	240600
08037-01008	K0210-56A5A	30	240610
08037-03614	E0120-02A1	23	120030
08037-03620	E0202-01A2	5	120060
08037-10610	K0810-01A3	8	240741
08037-13550	K0210-20A9	44	240290
08038-00518	E0202-02A0	20	120070
08038-00518	K0210-17A5	3	240250
08038-00519	E0202-02A0	19	120070
08038-06031	E0202-01A2	20	120060
08038-06031	E0202-05A0	8	120100
08038-22009	E0202-03A2	10	120080
08038-42009	E0202-03A2	2	120080
08040-00100	K0810-01A2	1	240740
08040-00300	K0810-01A2	1	240740
08052-01311	K0210-05A0	9	240090
08053-01510	A6510-01A0	7	030870
08053-01510	B0110-01A1	51	030030
08055-10612	E0300-01A0	21	120110
08055-10612	E0300-01A0	9	120110
08055-10630	E0300-01A0	10	120110
08055-10630	E0300-01A0	22	120110
08056-00111	K0210-53A5	19	240560
08056-00130	K0210-53A5	20	240560
08056-00271	K0210-36A0	1	240490
08059-00310	E0201-01A0	15A	120051
08059-00310	K0210-20A5	29	240280
08059-00310	K0210-20A9	30	240290
08073-10505	A201V-01A2Z	1	030210
08086-20100	K0210-17A5	1	240250
08088-30000	E0202-02A0	1	120070
08104-12420	E0120-02A1	17	120030
08104-12420	E0120-02A1	9	120030
08105-12420	E0120-02A1	16	120030
08105-12420	E0120-02A1	8	120030
08110-12410	E0120-02A1	10	120030
08110-12410	E0120-02A1	18	120030
08160-72400	E0410-01A0	1	120120
08160-72420	E0410-01A0	2	120120
08164-C0000	M4100-04A0	36	270040
08191-00770	B0110-01A1	46	030030
08191-00770	E0200-01A4	23	120040
08191-00770	E0200-03A1	3	120050
08191-00770	E0202-01A2	4	120060
08191-00770	E0202-04A0	9	120090
08191-00770	K0210-25A5	3	240350
08191-00770	K0210-30A0	13	240410
08191-00770	K0210-32A5	24	240430
08191-00770	M4100-14B0	2	270120
08192-12300	E0200-03A1	1	120050
08192-12810	Y1670-01A0	8	420340
08192-22100	B0110-01A1	45	030030
08192-22100	E0200-03A1	2	120050
08192-22100	E0202-01A2	3	120060
08192-22200	K0210-32A5	25	240430
08192-22830	K0210-30A0	14	240410
08192-23100	E0200-01A4	22	120040
08192-23100	M4100-14B0	1	270120
08192-24200	E0202-04A0	8	120090
08193-20010	K4504-01A0	8	240840
08193-21012	E0200-01A4	13	120040
08193-21012	E0200-01A4	19	120040
08193-21012	E0200-03A1	4	120050
08193-21012	E0202-01A2	18	120060
08193-21012	K0210-20A9	41	240290
08193-21012	K0210-30A0	15	240410
08210-01202	K0210-12A0A	37	240190
08210-01202	K4460-01A0	17	240790
08210-01203	H2260-01A0	14	180070
08210-01203	K4460-01A0	15	240790
08210-01205	H4200-09A0	31	180170
08210-01205	H4200-09A2	31	180180
08210-01207	H4200-09A0	22	180170
08210-01207	H4200-09A0	24	180170
08210-01207	H4200-09A0	26	180170
08210-01207	H4200-09A0	28	180170
08210-01207	H4200-09A2	22	180180
08210-01207	H4200-09A2	24	180180
08210-01207	H4200-09A2	26	180180
08210-01207	H4200-09A2	28	180180
08210-01207	H4200-09A2	48	180180
08210-01207	H4200-09A2	50	180180
08210-01802	F2760-01A0	23	150080
08210-01802	F2760-01A1	23	150081
08210-01802	H4200-03A0	1A	180100
08210-01803	F2760-01A0	21	150080
08210-01803	F2760-01A0	24	150080
08210-01803	F2760-01A1	21	150081
08210-01803	F2760-01A1	24	150081
08210-01803	H2260-01A0	2	180070
08210-01803	K4460-02A0	38	240800
08210-01804	K4460-02A0	38A	240800

PARTS N°	FIG. N°	INDEX	PAGE
08210-02904	H4200-08A0	2A	180160
08670-02001	A1410-01D3	26	030100
08671-50030	A1410-01D3	27	030100
09001-03600	V0300-01A3	6	390030
09002-01417	V0300-01A3	9	390030
09002-01922	V0300-01A3	10	390030
09002-03032	V0300-01A3	11	390030
09019-08035	V0300-01A3	7	390030
09056-04613	V0300-01A3	8	390030
09161-21000	U0100-01A2	11	360010
09161-C0641	U0100-01A3	12	360020
09162-21000	U0100-01A2	13	360010
09162-C0641	U0100-01A3	17	360020
09280-10040	S0110-01A3	1	300020
09280-10130	S0110-01A3	2	300020
09281-00041	S0110-01A3	3	300020
09282-00017	S0110-01A3	6	300020
09283-00000	S0110-01A3	4	300020
09285-00000	S0110-01A3	5	300020
09289-00000	V0300-01A3	4	390030
09305-00800	K0210-10A0	12	240150
09305-00800	K0210-10A4	23	240160
09409-00001	K0160-01A4	1	240030
09409-00001	K0160-01A4	2	240030
09409-00002	K0160-01A4	2	240030
09409-00003	K0160-01A4	1	240030
09409-00003	K0160-01A4	2	240030
09409-10001	K0160-01A4	1	240030
09409-20000	K0160-01A4	2	240030
09415-01008	K0210-06A5	2	240100
09415-01008	K0210-46A5	3	240500
09415-01008	K0210-51A9	5	240530
09415-01008	K0210-54A5	18	240580
09415-01008	K0210-54A6	9	240590
09415-01610	K0210-06A5	34	240100
09415-02512	K0210-32A5	11	240430
09415-02512	K0210-32A6	17	240440
09415-02512	K0210-34A0	1	240470
09415-03614	E0300-01A0	31	120110
09460-00004	V0300-01A2	1	390020
09479-02400	F2420-54A0	42	150060
09479-02400	K0210-15A0	3	240220
09479-02400	K0210-15A0	6	240220
09479-02400	K0713-01A0	13	240720
09479-02400	K0713-01A0	4	240720
09479-02400	K0713-01A0	8	240720
09483-10502	K0210-15A0	2	240220
09483-10502	K0210-15A0	5	240220
09483-10510	K0713-01A0	3	240720
09483-10514	K0713-01A0	7	240720

PARTS N°	FIG. N°	INDEX	PAGE
09602-10001	J4110-01A1	2	210010
09608-05080	F2420-51A0	13	150030
09620-A2120	K0210-36A0	5	240490
09620-A2120	K0210-36A1	1	240491
09653-01001	U0100-01A2	12	360010
09653-A0641	U0100-01A3	11	360020
09659-51000	U0100-01A2	19	360010
09659-A057A	K4460-02A0	45	240800
09659-A057B	H4200-09A0	2	180170
09659-A057B	H4200-09A2	2	180180
09659-A057B	K4460-02A0	45	240800
09667-01001	U0100-01A2	15	360010
09667-A0880	U0100-01A3	15	360020
09668-01001	U0100-01A2	18	360010
09669-0000E	U0100-01A2	10	360010
09669-0000E	U0100-01A3	10	360020
09690-P0800	U0100-01A2	4	360010
09690-P0800	U0100-01A3	8	360020
09806-C0883	U0100-01A3	14	360020
09807-C0883	U0100-01A2	14	360010
09807-C0883	U0100-01A3	16	360020
09808-01000	U0100-01A2	17	360010
09808-A1201	U0100-01A3	13	360020
09812-11000	U0100-01A2	16	360010
09920-00150	A2119-01B7	11	030320
09920-00150	A2219-01B4	15	030340
09920-00150	A283P-01A0	2	030460
09960-01001	U0100-01A2	6	360010
09960-01601	U0100-01A3	9	360020
09963-01001	U0100-01A2	20	360010
09963-03001	V0300-01A3	13	390030
11Y-01-11280	K0711-01A0	3	240690
11Y-06-11391	B0110-02A0	13	030040
11Y-06-11630	B0110-02A0	12	030040
11Y-09-11140	D0100-01A0	17	090010
11Y-09-11140	D0100-01A0	19	090010
11Y-09-11140	D0100-01A0	36	090010
11Y-12-11130	B0600-01A0	2	030060
11Y-62-11980	H0120-01A2	24	180020
11Y-62-11980	H0120-01A2	27	180020
11Y-62-11980	H0120-01A4	24	180030
11Y-62-11980	H0120-01A4	26	180030
11Y-62-11980	H0122-01A0	38	180040
11Y-62-11980	H0122-02A0	14	180050
11Y-62-12140	K0210-10A4	19	240160
11Y-62-12170	K0210-11A0	3	240170
11Y-62-12170	K0210-11A4	2	240180
11Y-62-12630	K4460-02A0	32	240800
11Y-979-1950	K0810-01A3	1	240741
11Y-979-4190	K0210-52A5	7	240540

PARTS N°	FIG. N°	INDEX	PAGE
11Y-979-4190	K0210-52A5A	7	240541
11Y-979-4190	K0210-52A6	4	240550
124-06-51160	E0110-01A0	1	120010
124-06-61540	E0110-01A0	1	120010
124-15-41690	F2420-54A0	39	150060
124-15-51740	F2420-54A0	33	150060
124-15-51740	F2420-54A0A	33	150061
124-54-26540	C0120-01A0	20	060050
124-Z11-1530	K0713-01A0	1	240720
130-43-64260	K4504-01A0	6	240840
130-43-64260	M4100-01A0	13	270010
142-70-12260	T4130-01A1	4	330070
144-63-92170	Y1620-01A0	7	420190
144-63-92170	Y1620-11A0	7	420200
144-854-1890	F2760-02A0	42	150090
14X-06-12280	E0202-01A2	19	120060
14X-06-12280	E0202-03A2	2	120080
14X-54-18150	K0210-04A0	8	240080
14X-911-1540	K0210-55A5A	44	240600
14X-911-1540	K0210-56A5A	31	240610
14X-978-1340	K0210-52A6	3	240550
14Y-22-13270	F2420-53A0	12	150050
154-54-23260	M4200-01A0	10	270130
154-54-23260	M4200-01A0	4	270130
154-61-16570	A1570-01E7	14	030170
154-61-16570	A1570-01E7	21	030170
154-61-16570	E0202-05A0	6	120100
154-61-16570	F4400-53A0	32	150150
154-61-16570	F4500-53A0	25	150210
170-21-11190	F2420-54A0A	37	150061
175-54-34170	F2430-01A0	3	150070
175-54-34170	J4140-01A0	14	210060
175-79-83760	A1410-01D3	28	030100
17A-911-1671	K0711-01A0	27	240690
17M-04-41190	D0100-01A0	2	090010
195-01-16261	H4200-03A0	15	180100
195-33-11220	B0110-01A0	25	030020
195-979-5190	K4460-02A0	40	240800
198-43-15310	H0120-01A2	14	180020
198-43-15310	H0120-01A4	14	180030
198-63-75190	Y1622-01A0	9	420210
198-Z11-4610	K0810-01A3	5	240741
201-979-7820	K0210-02A0	1	240050
203-43-21370	K0210-10A0	16	240150
203-43-21370	K0210-10A4	27	240160
203-54-55660	E0202-05A0	7	120100
203-54-56970	C0110-02A0	30	060020
203-54-56970	H0110-01A0A	14	180010
203-54-56970	H0110-01A0A	17	180010
203-54-56970	M4100-05A0	14	270050

PARTS N°	FIG. N°	INDEX	PAGE
205-00-72430	K0210-36A0	5	240490
205-00-72430	K0210-36A1	1	240491
205-03-71330	H0122-01A0	33	180040
205-03-71532	M4100-10A0A	2	270090
205-03-71540	M4100-10A0A	2	270090
205-54-51250	K0210-52A5	12	240540
205-54-51250	K0210-52A5A	11	240541
205-54-51250	K0210-52A6	9	240550
205-54-71830	K0210-55A5A	45	240600
205-54-71830	K0210-56A5A	32	240610
205-54-72220	K0210-55A5A	46	240600
205-54-72220	K0210-56A5A	33	240610
205-60-51390	H4200-09A0	16	180170
205-60-51390	H4200-09A2	16	180180
205-60-51410	H4200-09A0	17	180170
205-60-51410	H4200-09A2	17	180180
205-60-51420	H4200-09A0	18	180170
205-60-51420	H4200-09A2	18	180180
205-60-64290	H4200-09A0	15	180170
205-60-64290	H4200-09A2	15	180180
205-60-64300	H4200-09A0	14	180170
205-60-64300	H4200-09A2	14	180180
207-54-16860	E0300-01A0	25	120110
209-09-11340	E0300-01A0	26	120110
209-62-11810	A1610-01H6	15	030180
209-62-64232	F2760-02A0	10	150090
209-62-64232	F2760-02A0	18	150090
20K-970-1150	F2760-02A0	9	150090
20S-01-71331	F4810-01A0	8	150230
20T-54-75290	K0210-57A5	1	240620
20U-54-24850	K0210-53A5	14	240560
20U-54-24850	K0210-53A6	8	240570
20X-70-14160	T4130-01A1	1	330070
20X-70-14160	T4130-01A1	10	330070
20X-70-14170	T4130-01A1	18	330070
20X-70-14170	T4130-01A1	7	330070
20X-70-14180	T4130-01A1	19	330070
20X-70-14180	T4130-01A1	8	330070
20Y-03-11330	C0110-02A0	16	060020
20Y-06-15240	M4100-10A0A	1	270090
20Y-06-21751	K0210-59A0	19	240640
20Y-06-23472	K0210-59A0	16	240640
20Y-06-25240	K0210-20A5	1	240280
20Y-06-25240	K0210-20A9	1	240290
20Y-06-25250	K0210-20A5	1	240280
20Y-06-25250	K0210-20A9	1	240290
20Y-06-25260	K0210-20A5	1	240280
20Y-06-25260	K0210-20A9	1	240290
20Y-54-14540	K0210-16A9	6	240240
20Y-54-35470	K0210-53A5	27	240560

PARTS N°	FIG. N°	INDEX	PAGE
20Y-54-35480	K0210-53A5	28	240560
20Y-54-35710	K0210-57A5	6	240620
20Y-54-35961	K0210-57A5	3	240620
20Y-54-52791	K0210-09A0	20	240140
20Y-60-11410	H4200-09A0	1	180170
20Y-60-11410	H4200-09A2	1	180180
20Y-62-15651	K0210-10A0	26	240150
20Y-62-15651	K0210-10A4	37	240160
20Y-62-18890	K0210-11A0	19	240170
20Y-62-18890	K0210-11A4	19	240180
20Y-62-18910	K0210-11A0	10	240170
20Y-62-18910	K0210-11A4	9	240180
20Y-979-3120	K0710-01A0	3	240680
20Y-979-3130	K0711-01A0	30	240690
20Y-979-3140	K0711-01A0	20	240690
20Y-979-6771	K0210-09A0	4	240140
21J-54-14782	E0201-01A0	16	120051
21K-62-21660	K0210-02A0	9A	240050
21U-62-34710	H4200-09A0	22	180170
21U-62-34710	H4200-09A2	22	180180
21U-62-34730	H4200-09A2	47	180180
21U-62-34730	H4200-09A2	49	180180
21U-62-34740	H4200-09A0	24	180170
21U-62-34740	H4200-09A2	24	180180
21U-62-34750	H4200-09A0	28	180170
21U-62-34750	H4200-09A0	30	180170
21U-62-34750	H4200-09A2	28	180180
21U-62-34750	H4200-09A2	30	180180
21U-62-34760	H4200-09A0	26	180170
21U-62-34760	H4200-09A0	30	180170
21U-62-34760	H4200-09A2	26	180180
21U-62-34760	H4200-09A2	30	180180
21W-62-42640	H0120-01A2	22	180020
21W-62-42640	H0120-01A2	25	180020
21W-62-42640	H0120-01A4	22	180030
21W-62-42640	H0120-01A4	27	180030
21W-62-42640	H0122-02A0	19	180050
21W-62-43970	K4450-01A0	16	240780
21W-62-43980	C0110-01A0	4	060010
21W-62-43980	C0110-04A0	8	060040
21W-62-43980	K0210-12A0A	26	240190
21W-62-43980	K4450-01A0	15	240780
21W-62-43980	K4460-01A0	2	240790
21Y-62-11591	H0120-01A2	31	180020
21Y-62-11591	H0120-01A4	30	180030
22B-00-11210	M4200-01A0	11	270130
22B-00-11210	M4200-01A0	5	270130
22B-54-16340	K0210-55A5A	59A	240600
22B-54-16340	K0210-56A5A	46A	240610
22M-54-26180	M4410-01A2	2A	270170

PARTS N°	FIG. N°	INDEX	PAGE
22M-54-26180	M4410-01A3	2A	270180
22T-55-11630	K0210-53A5	13	240560
22T-56-12991	M4100-10A0A	30	270090
22T-56-12991	M4100-10A0A	40	270090
22T-56-13210	K0210-59A0	11	240640
22T-56-13210	K0210-59A5	11	240650
22U-04-21260	B9999-01R1	5	030980
22U-06-22420	K0210-22A5	21	240310
22U-06-22470	K0210-22A5	22	240310
22W-06-13160	K0210-22A5	2	240310
22W-06-13160	K0210-22A5	5	240310
22W-70-16120	K0210-52A5	11	240540
22W-70-16120	K0210-52A5A	10	240541
22W-70-16120	K0210-52A6	8	240550
22W-70-16120	K0210-54A5	7	240580
23A-06-21410	E0120-02A1	5	120030
23A-06-21420	E0120-02A1	6	120030
23A-06-21430	E0120-02A1	7	120030
23A-06-21440	E0120-02A1	11	120030
23A-06-21440	E0120-02A1	19	120030
23A-06-21510	E0120-02A1	13	120030
23A-06-21520	E0120-02A1	14	120030
23A-06-21530	E0120-02A1	15	120030
23S-05-35320	K0210-22A5	12	240310
23S-54-27790	M4100-10A0A	31	270090
23S-54-53420	K0210-16A9	14	240240
23S-55-51530	K0210-06A5	22	240100
23S-55-51530	K0210-32A5	2	240430
23S-55-51530	K0210-32A5	8	240430
23S-55-51530	K0210-32A6	14	240440
23S-55-51530	K0210-32A6	2	240440
23S-55-51970	K0210-33A9	20	240460
23S-55-51970	K0210-59A0	13	240640
23S-55-51970	K0210-59A0	5	240640
23S-55-51970	K0210-59A5	13	240650
23S-55-51970	K0210-59A5	5	240650
23S-62-25850	K0210-20A5	4	240280
23S-62-25850	K0210-20A9	4	240290
240300	K0210-22A5K0210-21A0		
240310			
281-01-13180	H4200-08A0	23	180160
283-06-16110	K0210-20A5	1	240280
283-06-16110	K0210-20A9	1	240290
283-06-16120	K0210-22A5	3	240310
283-06-16120	K0210-22A5	6	240310
283-06-16160	K0210-20A5	1	240280
283-06-16160	K0210-20A9	1	240290
283-06-16190	K0210-22A5	1	240310
283-06-16190	K0210-22A5	4	240310
287-06-16420	E0201-01A0	11	120051

PARTS Nº	FIG. Nº	INDEX	PAGE
287-06-16420	K0210-23A0	8	240320
287-06-16420	K0210-32A6	30	240440
287-06-16420	K0210-32A6	38	240440
362-43-15210	K0210-30A0	8	240410
362-43-15220	K0210-30A0	9	240410
363-04-11130	D0100-01A0	10	090010
363-43-37410	K0210-12A0A	2	240190
363-54-31450	E0201-01A0	22	120051
363-54-31450	K0210-35A0	6	240480
363-54-31450	K0210-51A9	4	240530
363-54-31450	K0210-57A5	10	240620
363-54-31450	M4410-01A2	4	270170
363-54-31450	M4410-01A3	4	270180
391-40-13220	A1010-01D0	3	030030
3EB-55-32290	K0210-31A0	2	240420
415-03-11210	C0110-03A0	10	060030
415-03-11210	C0110-03A0	14	060030
415-18-11230	F2760-02A0	16	150090
415-18-11230	F2760-02A0	27	150090
415-18-11230	F2760-02A0	32	150090
415-18-11230	F2760-02A0	8	150090
415-18-21310	F2760-02A0	13	150090
415-18-21310	F2760-02A0	25	150090
415-18-21310	F2760-02A0	30	150090
415-18-21310	F2760-02A0	5	150090
415-46-11360	J4190-01A0	4	210070
415-46-11360	J4190-01A4	4	210080
415-46-11360	J4190-01A6	4	210081
415-46-11360	J4190-01A7	4	210082
415-54-11980	E0120-01A1	18	120020
415-54-11980	E0120-01A1	4	120020
415-54-11980	M4100-02A0	8	270020
415-54-31180	M4100-10A0A	41	270090
415-54-31210	M4100-01A0	6	270010
415-62-11560	H0122-01A0	35	180040
415-62-11560	K0210-28A0	4	240390
415-64-13120	H0120-01A2	13	180020
415-64-13120	H0120-01A4	13	180030
415-64-13120	H4200-04A2	15	180110
415-64-13120	H4200-07A0	16	180150
415-64-13120	H4200-13A2	7	180200
415-64-13130	H0120-01A2	11	180020
415-64-13130	H0120-01A4	11	180030
415-64-13130	H4200-04A2	12	180110
415-64-13130	H4200-13A2	5	180200
416-03-11170	C0110-02A0	1	060020
416-03-11210	C0110-03A0	11	060030
416-03-11210	C0110-03A0	15	060030
416-03-11210	M4210-01A1	15	270140
416-03-11250	C0110-03A0	5	060030

PARTS Nº	FIG. Nº	INDEX	PAGE
416-03-11260	C0110-03A0	3	060030
416-03-11260	C0110-03A0	6	060030
416-03-11270	C0110-03A0	2	060030
416-03-11281	C0110-03A0	18	060030
416-06-22250	K0210-22A5	17	240310
416-06-31410	M4100-04A0	36	270040
416-22-26170	K0210-01A0	6	240040
416-22-26260	F4460-01A0	2	150170
416-40-11150	K0160-01A4	3	240030
416-43-37420	K4460-03A0	7	240810
416-43-37430	K4470-01A0	6	240830
416-43-37440	K4470-01A0	12	240830
416-43-37690	K4460-02A0	18	240800
416-43-38110	K0210-10A0	2	240150
416-43-38110	K0210-10A4	2	240160
416-43-38121	K0210-10A0	2	240150
416-43-38121	K0210-10A4	2	240160
416-46-11210	J4120-01A0	2	210030
416-46-11210	J4120-01A1	2	210040
416-46-12230	J4190-01A0	2	210070
416-46-12230	J4190-01A4	2	210080
416-46-12230	J4190-01A6	2	210081
416-46-12230	J4190-01A7	2	210082
416-54-21710	M4100-07A0	3	270060
416-56-31120	K0210-52A5	5	240540
416-56-31120	K0210-52A5A	5	240541
416-56-31120	K0210-52A7	1	240551
416-62-11480	H0122-01A0	23	180040
416-62-11480	H0122-01A0	27	180040
416-62-11480	K0210-28A0	7	240390
416-62-13450	H0122-01A0	39	180040
416-62-13450	H0122-01A0	41	180040
416-62-33470	F2760-01A1	29	150081
416-62-33840	H4200-03A0	11	180100
416-62-33850	H4200-03A0	12	180100
416-62-33860	H4200-03A0	13	180100
416-64-15210	H0122-01A0	1	180040
416-64-15230	H0122-01A0	3	180040
416-64-15250	H0122-01A0	6	180040
416-64-15260	H0122-01A0	7	180040
416-64-15270	H0122-01A0	8	180040
416-70-22190	T4120-01A1	1	330050
416-926-3370	K0210-56A5A	2	240610
416-926-3380	K0210-56A5A	3	240610
416-926-3481	K0210-52A5	1	240540
416-926-3481	K0210-52A5A	1	240541
416-926-3493	K0810-01A3	6	240741
416-926-3571	K0210-51A5	9	240510
416-926-3571	K0210-51A6	6	240520
416-926-3771	K0210-52A5	2	240540

PARTS Nº	FIG. Nº	INDEX	PAGE
416-926-3771	K0210-52A5A	2	240541
416-926-3781	K0210-52A5	3	240540
416-926-3781	K0210-52A5A	3	240541
416-926-3810	K0210-54A5	10	240580
416-926-3820	K0210-54A5	11	240580
416-926-3830	K0210-54A5	12	240580
416-926-3840	K0210-54A5	13	240580
416-926-3850	K0210-54A5	14	240580
416-926-3860	K0210-54A5	15	240580
416-926-3870	K0210-54A5	16	240580
416-926-3880	K0210-54A5	17	240580
416-942-1550	K0210-15A0	1	240220
416-942-1550	K0210-15A0	4	240220
416-942-1560	K0713-01A0	6	240720
416-Z03-3140	C0110-04A0	36	060040
416-Z91-2110	M4100-13B2	1	270110
417-03-31120	C0110-02A0	31	060020
417-03-31160	C0110-02A0	17	060020
417-03-31380	C0110-02A0	19	060020
417-03-32111	C0120-01A0	1	060050
417-03-32121	C0120-01A0	2	060050
417-03-32141	C0120-01A0	6	060050
417-03-32150	C0120-01A0	3	060050
417-03-32191	C0120-01A0	18	060050
417-03-33321	H2260-01A0	1	180070
417-03-33331	H2260-01A0	13	180070
417-04-10140	D0100-01A0	11	090010
417-04-21230	D0100-01A0	3	090010
417-04-31114	D0100-01A0	1	090010
417-04-31115	D0100-01A0	1	090010
417-04-31330	D0100-01A0	14	090010
417-06-11123	E0120-01A1	30	120020
417-06-11321	M4230-01A0	17	270150
417-06-12560	K0210-20A5	33	240280
417-06-12560	K0210-20A9	34	240290
417-06-22410	K0210-20A5	10	240280
417-06-22410	K0210-20A9	11	240290
417-06-32121	M4100-04A0	21	270040
417-06-32144	E0200-01A4	1	120040
417-06-32280	E0200-01A4	14	120040
417-06-32362	E0202-04A0	1	120090
417-06-32610	M4100-04A0	32	270040
417-07-22380	K0711-02A0	6	240700
417-07-31160	K0713-01A0	10	240720
417-09-11120	T4110-01A0	12	330010
417-09-11120	T4110-01A0	4	330010
417-09-11120	T4110-01A1	12	330020
417-09-11120	T4110-01A1	4	330020
417-09-11120	Y1620-01A0	3	420190
417-14-31121	C0110-04A0	32	060040

PARTS Nº	FIG. Nº	INDEX	PAGE
417-14-31131	C0110-04A0	33	060040
417-14-31221	C0400-01A0A	1	060060
417-14-31231	F2760-03A0	23	150100
417-15-13770	F4400-52A0	11	150140
417-15-13770	F4500-52A0	10	150200
417-17-31002	F2420-51A0	1	150030
417-17-31002	F2420-52A0	1	150040
417-17-31002	F2420-53A0	1	150050
417-17-31002	F2420-54A0	1	150060
417-17-31004	F2420-51A0	1	150030
417-17-31004	F2420-52A0	1	150040
417-17-31004	F2420-53A0	1	150050
417-17-31004	F2420-54A0A	1	150061
417-17-31102	F2420-51A0	1	150030
417-17-31104	F2420-51A0	1	150030
417-17-31112	F2420-51A0	1	150030
417-17-31131	F2420-51A0	9	150030
417-17-32120	F2420-53A0	21	150050
417-17-32132	F2420-53A0	23	150050
417-17-32621	F2420-52A0	6	150040
417-17-32700	F2420-52A0	10	150040
417-17-33212	F2420-53A0	11	150050
417-17-33220	F2420-53A0	14	150050
417-17-33231	F2420-53A0	17	150050
417-17-33310	F2420-54A0	1	150060
417-17-33310	F2420-54A0A	1	150061
417-17-33410	F2420-53A0	18	150050
417-17-33510	F2420-54A0	1	150060
417-17-33510	F2420-54A0A	1	150061
417-17-34260	F2420-01A0	13	150010
417-17-34281	F2420-54A0	40	150060
417-17-34290	F2420-54A0	37	150060
417-17-35140	F2420-52A0	13	150040
417-18-31101	F2430-01A0	1	150070
417-18-31101	Y1610-01A0	1	420010
417-18-31101	Y1610-02A0	1	420020
417-18-31101	Y1610-03A0	1	420030
417-18-31101	Y1610-04A0	1	420040
417-18-31101	Y1610-05A0	1	420050
417-18-31101	Y1610-06A0	1	420060
417-18-31101	Y1610-07A0	1	420070
417-18-31101	Y1610-08A0	1	420080
417-18-31101	Y1610-09A0	1	420090
417-18-31101	Y1610-10A0	1	420100
417-18-31101	Y1610-11A0	1	420110
417-18-31101	Y1610-12A0	1	420120
417-18-31101	Y1610-13A0	1	420130
417-18-31101	Y1610-14A0	1	420140
417-18-31111	K4450-01A0	1	240780
417-18-31120	F2760-03A0	12	150100

PARTS Nº	FIG. Nº	INDEX	PAGE
417-18-31140	K4450-01A0	31	240780
417-18-31151	K0210-13A0	6	240200
417-18-31160	F2760-03A0	9	150100
417-18-31170	K4450-01A0	10	240780
417-18-31201	F2430-01A0	6	150070
417-18-31201	Y1651-01A0	1	420220
417-18-31301	F2430-01A0	10	150070
417-18-31301	Y1651-01A1	1	420230
417-18-31380	K4450-01A0	9	240780
417-18-31411	K0210-14A0	1	240210
417-18-32111	F2760-02A0	7	150090
417-18-32121	F2760-02A0	15	150090
417-18-32130	F2760-02A0	26	150090
417-18-32140	F2760-02A0	31	150090
417-18-32161	H0210-01A0	6	180060
417-18-32190	F2760-01A0	32	150080
417-18-32190	F2760-01A0	9	150080
417-18-32190	F2760-01A1	34	150081
417-18-32190	F2760-01A1	9	150081
417-18-32220	F2760-01A0	14	150080
417-18-32220	F2760-01A1	14	150081
417-18-32270	F2760-01A0	20	150080
417-18-32270	F2760-01A1	20	150081
417-18-32291	F2760-02A0	22	150090
417-18-32320	F2760-02A0	35	150090
417-18-32330	F2760-01A1	25	150081
417-18-32390	F2760-01A1	46	150081
417-18-34110	F2760-01A1	40	150081
417-18-34120	F2760-01A1	37	150081
417-18-34130	F2760-01A1	40	150081
417-22-11361	F4400-52A0	15	150140
417-22-11361	F4500-52A0	13	150200
417-22-11371	F4400-52A0	15	150140
417-22-11371	F4500-52A0	13	150200
417-22-11381	F4400-52A0	15	150140
417-22-11381	F4500-52A0	13	150200
417-22-11391	F4400-52A0	15	150140
417-22-11391	F4500-52A0	13	150200
417-22-11420	F4500-52A0	20	150200
417-22-11432	F4500-52A0	19	150200
417-22-12580	F4400-51A0	12	150130
417-22-12580	F4500-51A0	12	150190
417-22-12840	F4400-52A0	36	150140
417-22-12840	F4500-52A0	26	150200
417-22-22810	F4400-51A0	2	150130
417-22-22810	F4500-51A0	2	150190
417-22-23250	F4400-54A0	4	150160
417-22-23250	F4500-54A0	4	150220
417-30-B1120	S0120-01A2	1	300050
417-30-B1141	S0110-01A2	1	300010
417-30-B1151	S0110-01A2	1	300010
417-30-B1161	S0110-01A2	2	300010
417-30-B1170	S0110-01A2	3	300010
417-30-B1180	S0110-01A2	4	300010
417-30-B1190	S0110-01A2	5	300010
417-30-B1220	S0120-01A1	1	300040
417-43-11210	K0210-27A0	1	240380
417-43-11220	K0210-27A0	2	240380
417-43-11230	K0210-27A0	3	240380
417-43-11240	K0210-27A0	4	240380
417-43-11250	K0210-27A0	5	240380
417-43-11260	K0210-27A0	6	240380
417-43-11270	K0210-27A0	7	240380
417-43-11280	K0210-27A0	8	240380
417-43-11290	K0210-27A0	9	240380
417-43-11310	K0210-27A0	10	240380
417-43-11320	K0210-27A0	11	240380
417-43-11330	K0210-27A0	12	240380
417-43-11340	K0210-27A0	13	240380
417-43-11350	K0210-27A0	14	240380
417-43-11360	K0210-27A0	15	240380
417-43-17430	K0210-01A0	9	240040
417-43-17440	K0210-01A0	10	240040
417-43-18380	F4460-01A0	1	150170
417-43-27120	K0210-12A0A	20	240190
417-43-27410	K0210-12A0A	3	240190
417-43-27420	K0210-12A0A	4	240190
417-43-31111	K0210-27A0	24	240380
417-43-31120	K0210-27A0	1	240380
417-43-31140	T4110-03A0	1	330040
417-43-37132	K4460-02A0	10	240800
417-43-37140	K4460-02A0	2	240800
417-43-37172	K4460-03A0	12	240810
417-43-37191	K4460-03A0	6	240810
417-43-37201	K4460-01A0	1	240790
417-43-37201	K4460-51A0	1	240820
417-43-37410	K4460-02A0	5	240800
417-43-37530	K4460-51A0	3	240820
417-43-37540	K4460-51A0	4	240820
417-43-37550	K4460-51A0	5	240820
417-43-37560	K4460-51A0	6	240820
417-43-37570	K4460-51A0	7	240820
417-43-37580	K4460-51A0	8	240820
417-43-37591	K4460-51A0	9	240820
417-43-37610	K4460-51A0	10	240820
417-43-37620	K4460-51A0	11	240820
417-43-37640	K4460-51A0	13	240820
417-43-37650	K4460-51A0	14	240820
417-43-37660	K4460-51A0	15	240820
417-43-37670	K4460-51A0	16	240820

PARTS N°	FIG. N°	INDEX	PAGE
417-43-37680	K4460-51A0	17	240820
417-43-37690	K4460-51A0	18	240820
417-43-37710	K4460-51A0	19	240820
417-43-37720	K4460-51A0	20	240820
417-43-37730	K4460-51A0	21	240820
417-43-37740	K4460-51A0	22	240820
417-43-37750	K4460-51A0	23	240820
417-43-37760	K4460-51A0	24	240820
417-43-37780	K4460-51A0	26	240820
417-43-37790	K4460-51A0	27	240820
417-43-37810	K4460-51A0	28	240820
417-43-37820	K4460-51A0	29	240820
417-43-37942	K4460-01A0	18	240790
417-43-37950	K4460-51A0	12	240820
417-43-37961	K4460-02A0	34	240800
417-43-37970	K4460-02A0	28	240800
417-43-37980	K4460-03A0	1	240810
417-43-37990	K0210-01A0	10	240040
417-43-38110	K0210-12A0A	23	240190
417-43-38130	K0210-12A0A	33	240190
417-43-39123	K4504-01A0	1	240840
417-43-39161	K4504-01A0	4	240840
417-44-31110	K4504-01A0	11	240840
417-46-11120	J4130-01A0	7	210050
417-46-11151	J4130-01A0	11	210050
417-46-11160	J4130-01A0	13	210050
417-46-11180	J4130-01A0	12	210050
417-46-11190	J4130-01A0	15	210050
417-46-11210	J4130-01A0	8	210050
417-46-11220	J4130-01A0	1	210050
417-46-11230	J4130-01A0	4	210050
417-46-11240	J4130-01A0	19	210050
417-46-11260	J4130-01A0	10	210050
417-46-11270	J4130-01A0	20	210050
417-46-11330	J4130-01A0	2	210050
417-46-11340	J4130-01A0	3	210050
417-46-22210	J4120-01A0	5	210030
417-46-22210	J4120-01A1	5	210040
417-46-22220	J4120-01A0	6	210030
417-46-22220	J4120-01A1	6	210040
417-46-24110	J4190-01A0	1	210070
417-46-24110	J4190-01A4	1	210080
417-46-24110	J4190-01A6	1	210081
417-46-24110	J4190-01A7	1	210082
417-46-31200	J4110-01A1	1	210010
417-46-31201	J4110-01A1	1	210010
417-46-31330	J4190-01A0	5	210070
417-46-31330	J4190-01A6	5	210081
417-46-32104	J4120-01A0	1	210030
417-46-32260	J4140-01A0	15	210060
417-46-33110	J4130-01A0	9	210050
417-46-34410	J4190-01A0	8	210070
417-46-34410	J4190-01A4	8	210080
417-46-34410	J4190-01A6	8	210081
417-46-34410	J4190-01A7	8	210082
417-46-34420	J4190-01A0	9	210070
417-46-34420	J4190-01A4	9	210080
417-46-34431	J4190-01A0	13	210070
417-46-34431	J4190-01A4	13	210080
417-46-34431	J4190-01A6	13	210081
417-46-34431	J4190-01A7	13	210082
417-46-34440	J4190-01A0	9	210070
417-46-34440	J4190-01A4	9	210080
417-46-34440	J4190-01A6	9	210081
417-46-34440	J4190-01A7	9	210082
417-46-35210	M4510-01A3	1	270190
417-46-36112	J4710-01A0	13	210100
417-46-36-113	J4710-01A0	13	210100
417-46-36250	J4710-01A0	1	210100
417-54-13470	H0120-01A2	12	180020
417-54-13470	H0120-01A4	12	180030
417-54-13470	H4200-04A2	14	180110
417-54-13470	H4200-13A2	6	180200
417-54-21430	M4100-02A0	2	270020
417-54-21431	M4100-02A0	2	270020
417-54-21460	M4100-08A0	8	270070
417-54-21562	M4100-04A0	15	270040
417-54-31212	M4200-01A0	1	270130
417-54-31222	M4200-01A0	7	270130
417-54-31420	M4100-05A0	13	270050
417-54-31430	M4100-05A0	9	270050
417-54-31441	M4100-05A0	1	270050
417-54-31482	M4100-01A0	11	270010
417-54-34131	M4210-01A1	1	270140
417-54-34132	M4210-01A1	1	270140
417-54-34141	M4210-01A1	4	270140
417-54-34142	M4210-01A1	4	270140
417-54-34370	M4230-01A0	16	270150
417-54-35211	M4100-10A0A	35	270090
417-54-B3110	M4100-01A0	1	270010
417-54-B3111	M4100-01A0	1	270010
417-54-B3112	M4100-01A0	1	270010
417-60-15380	H0110-01A0A	6	180010
417-60-35160	H0110-01A0A	7	180010
417-60-35221	H0110-01A0A	1	180010
417-62-13470	H4200-03A0	2	180100
417-62-13620	K0210-29A0	4	240400
417-62-13620	K0210-30A0	24	240410
417-62-14130	H0122-01A0	15	180040
417-62-14130	H0122-02A0	29	180050
417-62-14130	H4200-06A0	23	180140
417-62-14130	H4200-07A0	15	180150
417-62-14130	K0210-29A0	3	240400
417-62-14130	K0210-30A0	25	240410
417-62-23690	H4200-02A0	16	180090
417-62-23690	H4200-02A0	5	180090
417-62-31110	K0210-28A0	3	240390
417-62-31120	H0122-01A0	34	180040
417-62-31120	K0210-28A0	2	240390
417-62-31130	H4410-01A0	9	180210
417-62-31161	H4200-06A0	18	180140
417-62-31170	H0122-01A0	13	180040
417-62-31170	H0122-02A0	27	180050
417-62-31170	H4200-06A0	21	180140
417-62-31170	H4200-07A0	13	180150
417-62-31180	H0122-01A0	14	180040
417-62-31180	H0122-02A0	28	180050
417-62-31180	H4200-06A0	22	180140
417-62-31180	H4200-07A0	14	180150
417-62-31191	H0122-01A0	25	180040
417-62-31240	H0122-02A0	3	180050
417-62-31344	H4200-06A0	1	180140
417-62-31351	H4410-01A0	3	180210
417-62-31361	H4410-01A0	4	180210
417-62-31480	H4200-06A0	2	180140
417-62-31510	H4200-01A0	15	180080
417-62-31610	H0122-01A0	40	180040
417-62-31622	H4200-01A0	1	180080
417-62-31652	H4200-01A0	20	180080
417-62-31670	H0122-01A0	37	180040
417-62-31680	H4200-08A0	1	180160
417-62-31690	H4200-08A0	2	180160
417-62-31710	H4200-08A0	18	180160
417-62-31720	H0122-02A0	1	180050
417-62-31790	H4200-07A0	1	180150
417-62-31910	H4410-01A0	2	180210
417-62-33112	H0210-01A0	9	180060
417-62-33162	H4200-03A0	1	180100
417-62-33172	H4200-04A2	1	180110
417-62-33181	H4200-04A2	2	180110
417-62-33250	H0110-01A0A	21	180010
417-62-33270	H4200-01A0	7	180080
417-62-33280	H4200-04A2	10	180110
417-62-33290	H4200-04A2	11	180110
417-62-33510	H4200-03A0	14	180100
417-62-33520	H4200-08A0	12	180160
417-62-33650	H4200-05A0	1	180120
417-62-34113	H4200-09A0	21	180170
417-62-34113	H4200-09A2	21	180180
417-62-34122	H4200-09A0	23	180170

PARTS N°	FIG. N°	INDEX	PAGE
417-62-34122	H4200-09A2	23	180180
417-62-34133	H4200-09A0	25	180170
417-62-34133	H4200-09A2	25	180180
417-62-34143	H4200-09A0	27	180170
417-62-34143	H4200-09A2	27	180180
417-62-34211	H4200-09A0	30	180170
417-62-34211	H4200-09A2	30	180180
417-63-32220	T4140-01A0	3	330080
417-63-32230	T4140-01A0	5	330080
417-63-33230	T4150-01A0	3	330090
417-64-25020	H0122-01A0	1	180040
417-64-25310	H0122-01A0	2	180040
417-64-25320	H0122-01A0	5	180040
417-64-25330	H0122-01A0	4	180040
417-64-31110	H0120-01A2	5	180020
417-64-31110	H0120-01A4	5	180030
417-64-31120	H0120-01A2	2	180020
417-64-31120	H0120-01A4	2	180030
417-64-35101	K0210-28A0	1	240390
417-70-11340	T4110-01A0	21	330010
417-70-11340	T4110-01A1	21	330020
417-70-11340	T4110-02A0	5	330030
417-70-11340	T4140-01A0	8	330080
417-70-11860	T4110-01A0	11	330010
417-70-11860	T4110-01A0	2	330010
417-70-11860	T4110-01A1	11	330020
417-70-11860	T4110-01A1	2	330020
417-70-31101	T4110-01A0	1	330010
417-70-31201	T4110-01A0	5	330010
417-70-31201	T4110-01A1	5	330020
417-70-31300	T4110-01A0	9	330010
417-70-31300	T4110-01A1	9	330020
417-70-31400	T4110-01A1	1	330020
417-70-31710	T4110-01A0	14	330010
417-70-31710	T4110-01A1	14	330020
417-70-31740	T4110-02A0	1	330030
417-70-31820	T4110-01A0	7	330010
417-70-31820	T4110-01A1	7	330020
417-70-B1470	T4120-01A1	4	330050
417-70-B1610	T4120-01A1	3	330050
417-70-B1640	T4130-01A1	21	330070
417-70-B2100	T4120-01A1	1	330050
417-70-B2110	T4120-01A1	2	330050
417-70-B3160	T4122-21A1	2	330060
417-70-B3170	T4122-21A1	1	330060
417-70-B3220	T4110-01A1	1	330020
417-877-3313	H4200-13A2	2	180200
417-877-3323	H4200-13A2	1	180200
417-877-3331	H4200-13A2	21	180200
417-877-3341	H4200-13A2	20	180200
417-877-3351	H4200-09A2	49	180180
417-877-3361	H4200-09A2	47	180180
417-877-3391	J4110-01A2	1	210020
417-877-3510	H4200-13A2	13	180200
417-877-3520	H4200-13A2	14	180200
417-877-3630	H4200-13A2	31	180200
417-877-3640	H4200-13A2	32	180200
417-923-3950	K0210-55A5A	59	240600
417-923-3950	K0210-56A5A	46	240610
417-926-3105	K0210-55A5A	1	240600
417-926-3112	K0210-55A5A	1	240600
417-926-3122	K0210-56A5A	1	240610
417-926-3132	K0210-55A5A	2	240600
417-926-3142	K0210-55A5A	17	240600
417-926-3150	K0210-55A5A	19	240600
417-926-3150	K0210-56A5A	14	240610
417-926-3160	K0210-55A5A	20	240600
417-926-3181	K0210-55A5A	25	240600
417-926-3181	K0210-56A5A	7	240610
417-926-3191	K0210-55A5A	26	240600
417-926-3204	K0210-56A5A	1	240610
417-926-3210	K0210-55A5A	29	240600
417-926-3221	K0210-55A5A	30	240600
417-926-3221	K0210-56A5A	19	240610
417-926-3231	K0210-55A5A	31	240600
417-926-3250	K0210-55A5A	33	240600
417-926-3250	K0210-56A5A	21	240610
417-926-3260	K0210-55A5A	34	240600
417-926-3281	K0210-56A5A	4	240610
417-926-3290	K0210-56A5A	6	240610
417-926-3321	K0210-56A5A	8	240610
417-926-3330	K0210-56A5A	11	240610
417-926-3341	K0210-56A5A	12	240610
417-926-3350	K0210-56A5A	13	240610
417-926-3370	K0210-55A5A	32	240600
417-926-3370	K0210-56A5A	20	240610
417-926-3380	K0210-55A5A	47	240600
417-926-3380	K0210-56A5A	34	240610
417-926-3410	K0210-55A5A	27	240600
417-926-3410	K0210-56A5A	9	240610
417-926-3420	K0210-55A5A	28	240600
417-926-3420	K0210-56A5A	10	240610
417-926-3430	K0210-55A5A	56	240600
417-926-3430	K0210-56A5A	43	240610
417-926-3440	K0210-55A5A	57	240600
417-926-3440	K0210-56A5A	44	240610
417-926-3450	K0210-53A5	22	240560
417-926-3450	K0210-53A6	10	240570
417-926-3460	K0810-01A3	7	240741
417-926-3520	K0210-51A5	3	240510
417-926-3520	K0210-51A6	2	240520
417-926-3520	K0210-59A5	8	240650
417-926-3530	K0210-51A5	5	240510
417-926-3530	K0210-51A6	3	240520
417-926-3540	K0210-55A5A	58	240600
417-926-3540	K0210-56A5A	45	240610
417-926-3550	K0210-51A5	2	240510
417-926-3560	K0210-51A5	4	240510
417-926-3570	K0210-51A5	6	240510
417-926-3650	K0210-53A5	11	240560
417-926-3760	K0210-53A5	10	240560
417-926-3811	K0210-51A6	4	240520
417-926-3830	K0210-55A5A	8	240600
417-926-3840	K0210-55A5A	9	240600
417-926-3850	K0210-55A5A	2	240600
417-926-3870	K0210-55A5A	5	240600
417-926-3880	K0210-55A5A	6	240600
417-926-3890	K0210-55A5A	7	240600
417-926-3930	K0210-55A5A	10	240600
417-926-3940	K0210-55A5A	11	240600
417-926-3950	K0210-55A5A	12	240600
417-926-3960	K0210-55A5A	13	240600
417-926-3970	K0210-55A5A	14	240600
417-926-3990	K0210-55A5A	15	240600
417-926-3990	K0210-55A5A	3	240600
417-93-32210	U0100-01A2	1	360010
417-93-32220	U0100-01A2	2	360010
417-93-32230	U0100-01A2	3	360010
417-93-32230	U0100-01A3	7	360020
417-93-B3210	U0100-01A2	1	360010
417-93-B3210	U0100-01A3	5	360020
417-93-B3220	U0100-01A2	2	360010
417-93-B3220	U0100-01A3	6	360020
417-975-3212	J4120-01A1	1	210040
417-975-3270	M4510-01A3	9	270190
417-979-2110	F2420-02A3	1	150220
417-98-B1120	V0300-01A3	5	390030
417-V00-3110	U0100-01A2	7	360010
417-V00-3121	U0100-01A2	5	360010
417-V88-3210	J4190-01A4	5	210080
417-V88-3210	J4190-01A7	5	210082
417-V89-3190	H4200-13A2	3	180200
417-V89-3211	H4200-13A2	12	180200
418-01-11112	B0100-01A0	9	030010
418-01-11112	F4810-01A0	2	150230
418-01-11121	B0100-01A0	9	030010
418-01-11121	F4810-01A0	2	150230
418-01-11131	B0100-01A0	9	030010
418-01-31123	B0100-01A0	2	030010
418-01-31133	B0100-01A0	3	030010

PARTS Nº	FIG. Nº	INDEX	PAGE
418-01-31143	B0100-01A0	4	030010
418-01-31240	A5210-01B5	9	030770
418-01-32113	B0100-01A0	1	030010
418-03-11390	C0110-03A0	13	060030
418-03-11390	C0110-03A0	9	060030
418-03-31106	C0110-02A0	1	060020
418-03-31113	C0110-02A0	1	060020
418-03-31122	C0110-02A0	2	060020
418-03-31132	C0110-02A0	5	060020
418-03-31174	C0110-04A0	1	060040
418-03-31182	C0110-03A0	4	060030
418-03-31222	C0120-01A0	17	060050
418-03-31232	C0110-02A0	21	060020
418-03-31232	C0110-04A0	2	060040
418-03-31251	C0120-01A0	14	060050
418-03-31294	C0120-01A0	12	060050
418-03-31360	M4100-10A0A	4	270090
418-03-31373	C0110-02A0	18	060020
418-03-31391	M4100-10A0A	9	270090
418-03-31413	C0110-02A0	6	060020
418-03-31425	C0110-02A0	7	060020
418-03-31434	C0110-02A0	8	060020
418-03-31443	C0110-02A0	9	060020
418-03-31453	C0110-02A0	10	060020
418-03-31480	C0110-02A0	11	060020
418-03-31491	C0110-02A0	12	060020
418-03-31570	C0110-02A0	15	060020
418-03-31622	C0110-02A0	24	060020
418-03-31631	C0110-02A0	25	060020
418-03-31641	C0110-02A0	26	060020
418-03-31651	C0110-02A0	27	060020
418-03-32153	C0120-01A0	7	060050
418-03-32160	C0120-01A0	8	060050
418-03-32180	C0120-01A0	4	060050
418-03-32250	C0120-01A0	5	060050
418-03-32261	C0120-01A0	19	060050
418-03-33118	C0110-01A0	16	060010
418-03-33118	C0110-04A0	16	060040
418-03-33123	C0110-01A0	17	060010
418-03-33123	C0110-04A0	17	060040
418-03-33131	C0110-01A0	18	060010
418-03-33131	C0110-04A0	18	060040
418-03-33142	C0110-01A0	19	060010
418-03-33142	C0110-04A0	19	060040
418-03-33161	C0110-01A0	24	060010
418-03-33173	C0110-01A0	27	060010
418-03-33173	C0110-04A0	26	060040
418-03-33190	C0110-01A0	15	060010
418-03-33241	C0110-01A0	2	060010
418-03-33241	C0110-04A0	6	060040

PARTS Nº	FIG. Nº	INDEX	PAGE
418-03-33255	C0110-01A0	7	060010
418-03-33255	C0110-04A0	11	060040
418-03-33264	C0110-01A0	12	060010
418-03-33280	C0110-01A0	30	060010
418-03-33280	C0110-04A0	27	060040
418-03-33314	K4460-03A0	14	240810
418-03-33340	K4460-03A0	17	240810
418-04-31133	D0100-01A0	4	090010
418-04-31181	M4510-01A3	8	270190
418-04-31210	D0100-01A0	22	090010
418-04-31220	D0100-01A0	24	090010
418-04-31220	D0100-01A0	9	090010
418-04-31312	D0100-01A0	16	090010
418-04-31322	D0100-01A0	18	090010
418-04-31341	D0100-02A0	4	090020
418-06-12430	C0400-01A0A	13	060060
418-06-12430	E0200-01A4	2	120040
418-06-31115	E0120-01A1	1	120020
418-06-31125	E0120-01A1	15	120020
418-06-31284	B0110-02A0	16	030040
418-06-31381	K0210-20A5	26	240280
418-06-31381	K0210-20A9	27	240290
418-06-31422	E0202-03A2	5	120080
418-06-31490	K0210-25A2	1	240340
418-06-31490	K0210-25A5	1	240350
418-06-31510	E0120-01A1	29	120020
418-06-31522	E0120-01A1	5	120020
418-06-31532	E0120-01A1	19	120020
418-06-31541	E0120-02A1	1	120030
418-06-31591	E0202-05A0	3	120100
418-06-31610	K0210-20A5	15	240280
418-06-31610	K0210-20A9	16	240290
418-06-31640	K0210-20A5	16	240280
418-06-31640	K0210-20A9	17	240290
418-06-31790	E0202-05A0	5	120100
418-06-32111	K0210-17A5	2	240250
418-06-32261	E0202-02A0	18	120070
418-06-32274	B0110-02A0	1	030040
418-06-32281	B0110-02A0	25	030040
418-06-32290	B0110-02A0	6	030040
418-06-32312	M4100-04A0	29	270040
418-06-32347	E0202-01A2	1	120060
418-06-32356	B0110-01A0	4	030020
418-06-32356	B0110-01A1	4	030030
418-06-32414	E0202-02A0	14	120070
418-06-32452	K0210-20A5	11	240280
418-06-32452	K0210-20A9	12	240290
418-06-32483	K0210-20A5	1	240280
418-06-32483	K0210-20A9	1	240290
418-06-32484	K0210-20A5	1	240280

PARTS Nº	FIG. Nº	INDEX	PAGE
418-06-32484	K0210-20A9	1	240290
418-06-32710	K0210-32A6	41	240440
418-06-33115	E0300-01A0	27	120110
418-06-33125	E0300-01A0	28	120110
418-06-33191	E0300-01A0	34	120110
418-06-33212	E0300-01A0	1	120110
418-06-33222	E0300-01A0	13	120110
418-06-33230	E0120-02A1	4	120030
418-06-33260	E0120-02A1	12	120030
418-06-33410	E0300-01A0	15	120110
418-06-33410	E0300-01A0	3	120110
418-06-33420	E0300-01A0	16	120110
418-06-33420	E0300-01A0	4	120110
418-06-33430	E0300-01A0	17	120110
418-06-33430	E0300-01A0	5	120110
418-06-33441	E0300-01A0	18	120110
418-06-33441	E0300-01A0	6	120110
418-06-33451	E0300-01A0	19	120110
418-06-33451	E0300-01A0	7	120110
418-06-33460	E0300-01A0	20	120110
418-06-33460	E0300-01A0	8	120110
418-06-33470	E0300-01A0	11	120110
418-06-33470	E0300-01A0	23	120110
418-06-33480	E0300-01A0	12	120110
418-06-33480	E0300-01A0	24	120110
418-06-35114	K0210-26A2	1	240360
418-06-35114	K0210-26A9	1	240370
418-06-35114	K0210-26B0	1	240371
418-06-35115	K0210-26A2	1	240360
418-06-35115	K0210-26A9	1	240370
418-06-35115	K0210-26B0	1	240371
418-06-35140	K0210-26A2	2	240360
418-06-35140	K0210-26A9	2	240370
418-06-35140	K0210-26B0	2	240371
418-06-35150	K0210-26A2	3	240360
418-06-35150	K0210-26A9	3	240370
418-06-35150	K0210-26B0	3	240371
418-06-35160	K0210-26A2	4	240360
418-06-35160	K0210-26A9	4	240370
418-06-35160	K0210-26B0	4	240371
418-06-35210	K0210-20A5	1	240280
418-06-35210	K0210-20A5	1	240280
418-06-35210	K0210-20A9	1	240290
418-06-35210	K0210-20A9	1	240290
418-06-35220	K0210-20A5	1	240280
418-06-35220	K0210-20A5	1	240280
418-06-35220	K0210-20A9	1	240290
418-06-35220	K0210-20A9	1	240290
418-06-36210	F2430-01A0	14	150070
418-06-36230	K0210-22A5	25	240310

PARTS Nº	FIG. Nº	INDEX	PAGE
418-06-36230	K0210-26A2	10	240360
418-06-36230	K0210-26A9	10	240370
418-06-36230	K0210-26A9	6	240370
418-06-36230	K0210-26B0	10	240371
418-06-36230	K0210-54A5	2	240580
418-06-36310	K0210-26A2	5	240360
418-06-36310	K0210-26B0	6	240371
418-06-36320	K0210-26A2	6	240360
418-06-36320	K0210-26A9	5	240370
418-06-36320	K0210-26B0	5	240371
418-06-36330	K0210-26A2	7	240360
418-06-36330	K0210-26A9	7	240370
418-06-36330	K0210-26B0	7	240371
418-06-36340	K0210-26A2	8	240360
418-06-36340	K0210-26A9	8	240370
418-06-36340	K0210-26B0	8	240371
418-06-36350	K0210-26A2	9	240360
418-06-36350	K0210-26A9	9	240370
418-06-36350	K0210-26B0	9	240371
418-06-36370	K0210-22A5	20	240310
418-06-B1110	E0202-03A2	1	120080
418-06-B1120	E0202-03A2	9	120080
418-06-B1130	E0202-01A2	2	120060
418-07-25130	K0713-01A0	5	240720
418-07-29450	K0210-02A0	5	240050
418-07-31150	K0210-15A0	8	240220
418-07-32113	B0110-01A0	1	030020
418-07-32113	B0110-01A1	1	030030
418-07-32113	K0711-02A0	1	240700
418-07-33110	K0210-07A0	2	240110
418-07-33130	K0210-02A0	14	240050
418-07-33413	K0210-09A0	8	240140
418-07-33432	K0210-09A0	12	240140
418-07-33442	K0210-09A0	13	240140
418-07-33462	K0210-09A0	14	240140
418-07-33474	K0210-09A0	15	240140
418-07-33480	K0210-09A0	29	240140
418-07-33490	K0210-09A0	30	240140
418-07-33511	K0210-09A0	26	240140
418-07-33540	K0210-09A0	28	240140
418-07-33550	K0210-09A0	32A	240140
418-07-33560	K0210-09A0	27	240140
418-07-33570	K0210-09A0	27A	240140
418-07-33611	K0210-03A0	1	240060
418-07-33611	K0210-03A5	1	240070
418-07-33620	K0210-03A0	29	240060
418-07-33620	K0210-03A5	4	240070
418-07-33630	K0210-02A0	2	240050
418-07-33640	K0210-02A0	3	240050
418-07-33710	K0210-03A0	23	240060

PARTS Nº	FIG. Nº	INDEX	PAGE
418-07-33720	K0210-03A0	23	240060
418-07-33730	K0210-03A0	24	240060
418-07-33740	K0210-03A0	25	240060
418-07-33810	K0210-02A0	10	240050
418-07-33820	K0210-02A0	11	240050
418-07-36111	K0210-19A0	1	240270
418-07-36130	K0350-01A0	4	240670
418-07-36140	K0210-19A0	2	240270
418-07-38130	K0210-32A6	26	240440
418-07-B3470	K0210-09A0	15	240140
418-07-B3480	A5210-01B5	19	030770
418-09-11110	Y1620-11A0	14	420200
418-09-11110	Y1620-11A0	3	420200
418-12-31110	B0600-01A0	1	030060
418-12-31121	B0600-01A0	3	030060
418-14-31113	F2420-01A0	1	150010
418-14-31125	F2420-01A0	10	150010
418-14-31126	F2420-01A0	10	150010
418-14-31132	F4810-01A0	1	150230
418-14-31133	F4810-01A0	1	150230
418-14-31143	F2420-01A0	4	150010
418-14-31151	F2420-01A0	7	150010
418-14-31152	F2420-01A0	7	150010
418-17-31122	F2420-51A0	2	150030
418-17-31163	F2420-52A0	14	150040
418-17-32112	F2420-52A0	17	150040
418-17-32211	F2420-53A0	1	150050
418-17-32312	F2420-53A0	4	150050
418-17-32411	F2420-53A0	2	150050
418-17-32511	F2420-53A0	5	150050
418-17-32561	F2420-52A0	30	150040
418-17-32570	F2420-53A0	7	150050
418-17-32611	F2420-53A0	3	150050
418-17-32713	F2420-52A0	9	150040
418-17-32811	F2420-52A0	25	150040
418-17-32821	F2420-52A0	28	150040
418-17-33320	F2420-54A0	2	150060
418-17-33320	F2420-54A0A	2	150061
418-17-33420	F2420-54A0	9	150060
418-17-33420	F2420-54A0A	9	150061
418-17-33430	F2420-54A0	9	150060
418-17-33430	F2420-54A0A	9	150061
418-17-33440	F2420-54A0	9	150060
418-17-33440	F2420-54A0A	9	150061
418-17-33520	F2420-54A0	2	150060
418-17-33520	F2420-54A0A	2	150061
418-17-33530	F2420-54A0	1	150060
418-17-33530	F2420-54A0	2	150060
418-17-33530	F2420-54A0A	1	150061
418-17-33530	F2420-54A0A	2	150061
418-17-33541	F2420-54A0	2	150060
418-17-33541	F2420-54A0A	2	150061
418-17-34410	F2420-54A0A	38	150061
418-17-34420	F2420-54A0A	42	150061
418-17-34440	F2420-54A0A	45	150061
418-17-38115	F2420-54A0	10	150060
418-17-38116	F2420-54A0A	10	150061
418-17-38120	F2420-54A0	34	150060
418-17-38120	F2420-54A0A	34	150061
418-17-38134	F2420-54A0	22	150060
418-17-38134	F2420-54A0A	22	150061
418-17-38142	F2420-54A0	27	150060
418-17-38142	F2420-54A0A	27	150061
418-17-38150	F2420-54A0	30	150060
418-17-38150	F2420-54A0A	30	150061
418-17-38160	F2420-54A0	13	150060
418-17-38160	F2420-54A0A	13	150061
418-17-38170	F2420-54A0	17	150060
418-17-38170	F2420-54A0A	17	150061
418-17-38210	F2420-54A0	14	150060
418-17-38210	F2420-54A0A	14	150061
418-17-38221	F2420-54A0	16	150060
418-17-38221	F2420-54A0A	16	150061
418-17-38521	F2420-54A0	20	150060
418-17-38522	F2420-54A0A	20	150061
418-17-39311	F2420-53A0	6	150050
418-17-39321	F2420-53A0	13	150050
418-17-39330	F2420-53A0	24	150050
418-17-39340	F2420-53A0	25	150050
418-17-39710	F2420-52A0	1	150040
418-17-39710	F2420-54A0	18	150060
418-17-39710	F2420-54A0A	18	150061
418-18-31111	K4450-01A0	17	240780
418-18-31131	K0210-13A0	9	240200
418-18-31160	F2430-01A0	5	150070
418-18-31341	K4450-01A0	11	240780
418-18-31502	F2420-01A0	20	150010
418-18-32122	F2420-01A0	14	150010
418-18-32160	F2760-02A0	2	150090
418-18-32264	F2760-01A0	22	150080
418-18-32264	F2760-01A1	22	150081
418-18-32311	F2760-01A0	3	150080
418-18-32311	F2760-01A1	3	150081
418-18-32321	F2760-01A0	5	150080
418-18-32321	F2760-01A1	5	150081
418-18-32342	F2760-01A0	17	150080
418-18-32342	F2760-01A1	17	150081
418-18-32350	F2760-01A0	25	150080
418-18-32361	F2760-01A0	8	150080
418-18-32361	F2760-01A1	8	150081

PARTS N°	FIG. N°	INDEX	PAGE
418-18-32371	F2760-03A0	8	150100
418-18-32381	F2760-01A0	28	150080
418-18-34110	F2760-03A0	1	150100
418-18-34160	F2760-03A0	1	150100
418-18-34160	V0100-01A1	1	390010
418-20-32150	F4200-01A0	1	150110
418-20-34150	F4200-01A0	3	150110
418-22-11810	F4400-52A0	5	150140
418-22-11810	F4500-52A0	5	150200
418-22-12460	F4400-51A0	10	150130
418-22-12460	F4500-51A0	10	150190
418-22-12541	F4500-51A0	11	150190
418-22-12840	F4400-51A0	8	150130
418-22-12840	F4500-51A0	8	150190
418-22-12850	F4400-51A0	9	150130
418-22-12850	F4500-51A0	9	150190
418-22-21310	F4400-52A0	2	150140
418-22-21310	F4500-52A0	2	150200
418-22-21330	F4400-52A0	10	150140
418-22-21330	F4500-52A0	9	150200
418-22-21460	F4400-51A0	14	150130
418-22-21460	F4500-51A0	14	150190
418-22-21470	F4400-51A0	14	150130
418-22-21470	F4500-51A0	14	150190
418-22-21480	F4400-51A0	14	150130
418-22-21480	F4500-51A0	14	150190
418-22-22532	F4500-51A0	1	150190
418-22-30100	F4400-01A0	1	150120
418-22-30100	F4400-51A0	1	150130
418-22-30100	F4400-52A0	1	150140
418-22-30100	F4400-53A0	1	150150
418-22-30100	F4400-54A0	1	150160
418-22-31141	F4400-52A0	6	150140
418-22-31162	F4400-53A0	19	150150
418-22-31162	F4500-53A0	12	150210
418-22-31201	F4400-52A0	3	150140
418-22-31211	F4400-52A0	3	150140
418-22-31220	F4400-52A0	4	150140
418-22-31410	F4400-52A0	31	150140
418-22-31430	F4400-52A0	29	150140
418-22-31460	F4400-52A0	32	150140
418-22-31502	F4400-52A0	27	150140
418-22-31512	F4400-52A0	27	150140
418-22-31521	F4400-52A0	28	150140
418-22-31550	F4400-52A0	33	150140
418-22-31710	F4400-53A0	20	150150
418-22-31710	F4500-53A0	13	150210
418-22-31720	F4400-53A0	20	150150
418-22-31720	F4500-53A0	13	150210
418-22-31730	F4400-53A0	20	150150
418-22-31730	F4500-53A0	13	150210
418-22-31740	F4400-53A0	20	150150
418-22-31740	F4500-53A0	13	150210
418-22-31851	F4400-52A0	23	150140
418-22-31861	F4400-52A0	7	150140
418-22-31861	F4500-52A0	7	150200
418-22-31921	F4400-52A0	24	150140
418-22-31970	F4400-52A0	21	150140
418-22-31980	F4400-52A0	19	150140
418-22-31990	F4400-52A0	9	150140
418-22-32421	F4400-51A0	15	150130
418-22-32531	F4400-51A0	1	150130
418-22-32541	F4400-51A0	11	150130
418-22-32611	F4400-51A0	3	150130
418-22-32810	F4400-51A0	4	150130
418-22-32810	F4500-51A0	4	150190
418-22-33121	F4400-52A0	37	150140
418-22-33130	F4400-53A0	8	150150
418-22-33511	F4400-53A0	15	150150
418-22-33710	F4400-51A0	16	150130
418-22-33720	F4400-51A0	17	150130
418-22-36111	K0210-01A0	1	240040
418-22-36122	K0210-01A0	5	240040
418-22-36151	K0210-01A0	7	240040
418-22-36152	K0210-01A0	7	240040
418-22-36172	K0210-01A0	8	240040
418-22-36173	K0210-01A0	8	240040
418-22-36174	K0210-01A0	8	240040
418-22-36183	F4460-01A0	12	150170
418-22-36192	F4460-01A0	16	150170
418-22-36220	K0210-01A0	13	240040
418-23-30001	F4500-01A0	1	150180
418-23-30001	F4500-51A0	1	150190
418-23-30001	F4500-52A0	1	150200
418-23-30001	F4500-53A0	1	150210
418-23-30001	F4500-54A0	1	150220
418-23-31131	F4500-52A0	6	150200
418-23-31201	F4500-52A0	3	150200
418-23-31211	F4500-52A0	3	150200
418-23-31220	F4500-52A0	4	150200
418-23-31231	F4400-52A0	1	150140
418-23-31231	F4500-52A0	1	150200
418-23-31410	F4500-52A0	21	150200
418-23-31460	F4500-52A0	22	150200
418-23-31501	F4500-52A0	17	150200
418-23-31511	F4500-52A0	17	150200
418-23-31521	F4500-52A0	18	150200
418-23-31550	F4500-52A0	23	150200
418-23-32421	F4500-51A0	15	150190
418-23-32611	F4500-51A0	3	150190
418-23-32960	F4400-51A0	7	150130
418-23-32960	F4500-51A0	7	150190
418-23-33111	F4500-52A0	27	150200
418-23-33120	F4500-53A0	8	150210
418-23-33810	F4500-51A0	16	150190
418-23-33820	F4500-51A0	17	150190
418-30-31211	S0110-01A3	6	300020
418-30-31231	S0110-01A3	7	300020
418-30-31240	S0110-01A3	8	300020
418-30-31250	S0110-01A3	9	300020
418-33-21430	F4400-53A0	21	150150
418-33-21430	F4500-53A0	14	150210
418-33-31121	F4400-53A0	27	150150
418-33-31121	F4500-53A0	20	150210
418-33-31250	F4400-53A0	29	150150
418-33-31250	F4500-53A0	22	150210
418-33-31261	F4400-53A0	26	150150
418-33-31261	F4500-53A0	19	150210
418-33-31360	F4400-53A0	25	150150
418-33-31360	F4500-53A0	18	150210
418-33-31410	F4400-53A0	28	150150
418-33-31410	F4500-53A0	21	150210
418-33-31440	F4400-53A0	24	150150
418-33-31440	F4500-53A0	17	150210
418-33-31610	F4400-53A0	30	150150
418-33-31610	F4500-53A0	23	150210
418-40-32113	K0210-30A0	10	240410
418-40-32125	K0210-30A0	17	240410
418-40-32131	K0210-29A0	1	240400
418-40-32142	K0210-29A0	10	240400
418-40-32160	K0210-33A5	8	240450
418-40-32160	K0210-33A9	8	240460
418-40-32180	K0210-30A0	16	240410
418-40-32210	K0210-29A0	11	240400
418-43-18240	K0210-27A0	32	240380
418-43-28150	K0210-10A0	19	240150
418-43-28150	K0210-10A4	30	240160
418-43-31113	K4410-01A0	1	240770
418-43-31220	K0210-06A5	26	240100
418-43-31310	K0210-12A0A	37	240190
418-43-36122	K0210-31A0	1	240420
418-43-37111	K0210-12A0A	1	240190
418-43-37120	K0210-12A0A	21	240190
418-43-37130	K0210-12A0A	18	240190
418-43-37140	K0210-12A0A	17	240190
418-43-37230	K0210-12A0A	41	240190
418-43-37251	K4460-01A0	14	240790
418-43-37262	K4460-01A0	16	240790
418-43-37302	F4400-54A0	6	150160
418-43-37302	F4500-54A0	6	150220

PARTS N°	FIG. N°	INDEX	PAGE
418-43-37371	K4460-03A0	13	240810
418-43-37383	K4460-02A0	37	240800
418-43-37401	K4460-02A0	1	240800
418-43-37410	K0210-12A0A	5	240190
418-43-37480	K4470-01A0	8	240830
418-43-37490	K4470-01A0	7	240830
418-43-37523	K4470-01A0	1	240830
418-43-37543	K4470-01A0	2	240830
418-43-38112	K0210-10A0	23	240150
418-43-38112	K0210-10A4	34	240160
418-43-38120	K0210-10A0	17	240150
418-43-38120	K0210-10A4	28	240160
418-43-38131	K0210-10A0	14	240150
418-43-38131	K0210-10A4	25	240160
418-43-38142	K0210-10A0	11	240150
418-43-38142	K0210-10A4	22	240160
418-43-38190	K0210-10A0	3	240150
418-43-38190	K0210-10A4	3	240160
418-43-38221	K0210-11A0	2	240170
418-43-38221	K0210-11A4	1	240180
418-43-38231	K0210-11A0	9	240170
418-43-38243	K0210-11A0	14	240170
418-43-38243	K0210-11A4	15	240180
418-43-38253	K0210-11A0	16	240170
418-43-38253	K0210-11A4	16	240180
418-43-38262	K0210-11A0	17	240170
418-43-38262	K0210-11A4	17	240180
418-43-38272	K0210-11A0	18	240170
418-43-38272	K0210-11A4	18	240180
418-43-38282	K0210-11A0	21	240170
418-43-38311	K0210-06A5	16	240100
418-43-39140	T4110-03A0	4	330040
418-46-12131	J4210-01A0	2	210090
418-46-12141	J4210-01A0	5	210090
418-46-12160	J4210-01A0	10	210090
418-46-17120	J4210-01A0	11	210090
418-46-18114	J4710-01A0	8	210100
418-46-34210	J4140-01A0	2	210060
418-46-34220	J4140-01A0	4	210060
418-46-35140	M4510-01A3	4	270190
418-46-37120	J4210-01A0	12	210090
418-46-37130	J4210-01A0	8	210090
418-46-B7111	J4210-01A0	1	210090
418-54-21390	M4100-03A0	32	270030
418-54-21710	M4100-10A0A	22	270090
418-54-22190	K0210-32A5	7	240430
418-54-22190	K0210-32A6	7	240440
418-54-22190	K0210-33A5	20	240450
418-54-22190	K0210-33A9	24	240460
418-54-24570	M4210-01A1	9	270140
418-54-31142	M4100-04A0	1	270040
418-54-31155	M4100-04A0	3	270040
418-54-31164	M4100-04A0	6	270040
418-54-31172	M4100-04A0	12	270040
418-54-31181	M4100-03A0	16	270030
418-54-31181	M4100-03A0	6	270030
418-54-31192	M4100-03A0	17	270030
418-54-31192	M4100-03A0	7	270030
418-54-31230	M4200-01A0	13	270130
418-54-31231	M4200-01A0	13	270130
418-54-31240	M4200-01A0	18	270130
418-54-31241	M4200-01A0	18	270130
418-54-31253	M4100-08A0	1	270070
418-54-31264	M4100-08A0	4	270070
418-54-31330	M4100-09A0	2	270080
418-54-31340	M4100-09A0	4	270080
418-54-31353	M4100-03A0	13	270030
418-54-31362	M4100-01A0	4	270010
418-54-31394	M4100-10A0A	29	270090
418-54-31493	M4100-03A0	3	270030
418-54-31514	M4100-05A0	5	270050
418-54-31523	M4100-11A0	1	270100
418-54-31530	M4100-05A0	12	270050
418-54-31530	M4100-11A0	7	270100
418-54-31594	M4100-02A0	1	270020
418-54-31671	M4100-03A0	24	270030
418-54-31681	M4100-03A0	25	270030
418-54-31832	M4100-02A0	5	270020
418-54-31912	M4100-10A0A	23	270090
418-54-31960	M4100-03A0	23	270030
418-54-31970	M4100-04A0	11	270040
418-54-31980	M4100-04A0	38	270040
418-54-31990	M4100-01A0	9	270010
418-54-32224	K0210-05A0	1	240090
418-54-32230	K0210-05A0	1	240090
418-54-32241	K0210-06A5	31	240100
418-54-32252	K0210-08A0	1	240120
418-54-32252	K0210-08A4	1	240130
418-54-32263	K0210-08A0	4	240120
418-54-32323	K0210-32A5	1	240430
418-54-32323	K0210-32A6	1	240440
418-54-32332	K0210-32A5	10	240430
418-54-32332	K0210-32A6	16	240440
418-54-32341	K0210-32A5	9	240430
418-54-32341	K0210-32A6	15	240440
418-54-32352	K0210-32A6	9	240440
418-54-32362	K0210-32A6	10	240440
418-54-32372	K0210-32A6	11	240440
418-54-32381	K0210-32A6	12	240440
418-54-32392	K0210-32A6	13	240440
418-54-32412	K0310-01A0	1	240660
418-54-32424	K0210-06A5	11	240100
418-54-32440	K0210-08A0	7	240120
418-54-32451	M4100-10A0A	24	270090
418-54-32460	K0210-32A6	8	240440
418-54-32471	M4100-10A0A	25	270090
418-54-32480	M4100-01A0	2	270010
418-54-32490	M4100-01A0	3	270010
418-54-32550	K0210-33A5	12	240450
418-54-32550	K0210-33A9	12	240460
418-54-32560	K0210-33A5	13	240450
418-54-32560	K0210-33A9	13	240460
418-54-32582	K0210-33A5	5	240450
418-54-32582	K0210-33A9	5	240460
418-54-32593	K0210-33A5	6	240450
418-54-32593	K0210-33A9	6	240460
418-54-32612	K0210-33A5	1	240450
418-54-32612	K0210-33A9	1	240460
418-54-32625	K0210-33A5	18	240450
418-54-32625	K0210-33A9	22	240460
418-54-32634	K0210-04A0	1	240080
418-54-32644	K0210-33A5	2	240450
418-54-32644	K0210-33A9	2	240460
418-54-32653	K0210-33A5	4	240450
418-54-32653	K0210-33A9	4	240460
418-54-32680	K0210-04A0	4	240080
418-54-32713	K0210-33A5	9	240450
418-54-32713	K0210-33A9	9	240460
418-54-32725	K0210-32A5	17	240430
418-54-32725	K0210-32A6	23	240440
418-54-32774	K0210-06A5	19	240100
418-54-32870	K0210-33A5	21	240450
418-54-32870	K0210-33A9	25	240460
418-54-32891	K0210-05A0	5	240090
418-54-32920	K0210-07A0	1	240110
418-54-32921	K0210-07A0	1	240110
418-54-32931	K0210-32A5	22	240430
418-54-32931	K0210-32A6	35	240440
418-54-32990	K0210-23A0	1	240320
418-54-33110	K4100-01A0	1	240750
418-54-33130	M4100-02A0	10	270020
418-54-33142	K0210-33A5	7	240450
418-54-33142	K0210-33A9	7	240460
418-54-33240	M4100-10A0A	34	270090
418-54-33250	M4100-01A0	10	270010
418-54-33260	M4100-01A0	5	270010
418-54-33320	K0210-16A9	7	240240
418-54-33330	K0210-16A9	8	240240
418-54-33341	K0210-16A9	13	240240
418-54-33350	K0210-20A9	35	240290

PARTS Nº	FIG. Nº	INDEX	PAGE
418-54-33360	K0210-20A9	38	240290
418-54-33390	K0210-16A9	11	240240
418-54-33470	M4100-11A0	4	270100
418-54-33490	M4100-05A0	4	270050
418-54-33510	M4100-05A0	6	270050
418-54-33520	K0210-06A5	23	240100
418-54-33550	K0210-09A0	32	240140
418-54-33570	M4200-01A0	24	270130
418-54-34151	M4100-08A0	7	270070
418-54-34270	M4100-03A0	10	270030
418-54-34270	M4100-03A0	20	270030
418-54-34314	M4230-01A0	7	270150
418-54-34324	M4230-01A0	1	270150
418-54-34335	M4230-01A0	4	270150
418-54-34354	M4230-01A0	10	270150
418-54-34364	M4230-01A0	13	270150
418-54-34412	M4230-01A0	20	270150
418-54-34423	M4230-01A0	23	270150
418-54-34660	M4210-01A1	7	270140
418-54-34670	M4210-01A1	8	270140
418-54-34730	M4100-03A0	21	270030
418-54-34740	M4100-03A0	22	270030
418-54-34851	M4410-01A2	1	270170
418-54-34862	M4410-01A2	2	270170
418-54-35170	M4100-10A0A	36	270090
418-54-35180	M4100-10A0A	37	270090
418-54-35331	M4100-10A0A	26	270090
418-54-35410	M4100-04A0	2	270040
418-54-35450	M4100-04A0	10	270040
418-54-35460	M4410-01A3	1	270180
418-54-35470	M4410-01A3	2	270180
418-54-35510	M4310-01A0	1	270160
418-54-35520	M4310-01A0	4	270160
418-54-B1910	M4100-10A0A	23	270090
418-54-B2450	M4100-10A0A	24	270090
418-54-B2470	M4100-10A0A	25	270090
418-54-B2510	M4100-03A0	3	270030
418-54-B2520	M4100-03A0	13	270030
418-57-B1220	K0110-01A7	1	240010
418-57-B1230	K0110-01A8	1	240020
418-57-B1240	K0110-01A9	1	240021
418-57-B1310	K0110-01A7	2	240010
418-57-B1310	K0110-01A8	2	240020
418-57-B1310	K0110-01A9	2	240021
418-57-B1320	K0110-01A7	3	240010
418-57-B1320	K0110-01A8	3	240020
418-57-B1320	K0110-01A9	3	240021
418-60-35120	H0110-01A0A	6	180010
418-60-35152	H0110-01A0A	15	180010
418-60-35190	H0110-01A0A	12	180010

PARTS Nº	FIG. Nº	INDEX	PAGE
418-60-35210	H0110-01A0A	18	180010
418-62-21280	H4410-01A0	10	180210
418-62-23780	H4200-02A0	4	180090
418-62-23790	H4200-02A0	17	180090
418-62-23790	H4200-02A0	6	180090
418-62-23810	H4200-02A0	19	180090
418-62-23810	H4200-02A0	8	180090
418-62-31362	H0110-01A0A	28	180010
418-62-31491	H4200-09A0	13	180170
418-62-31491	H4200-09A2	13	180180
418-62-31525	H0122-02A0	2	180050
418-62-31551	H4200-05A0	2	180120
418-62-31551	H4200-05A6	2	180130
418-62-31563	H4200-05A6	1	180130
418-62-31611	H4200-07A0	2	180150
418-62-31620	H0110-01A0A	40	180010
418-62-31874	H4200-01A0	6	180080
418-62-32110	H0122-01A0	26	180040
418-62-32162	H0122-01A0	22	180040
418-62-32162	K0210-28A0	6	240390
418-62-32180	H4200-06A0	7	180140
418-62-32180	H4200-08A0	17	180160
418-62-33353	H4200-02A0	14	180090
418-62-33353	H4200-02A0	3	180090
418-62-33422	H4200-02A0	15	180090
418-62-33442	H0210-01A0	15	180060
418-62-33490	H0210-01A0	17	180060
418-62-33540	H0110-01A0A	32	180010
418-62-33550	H4200-08A0	11	180160
418-62-33640	H0120-01A2	19	180020
418-62-33640	H0120-01A2	38	180020
418-62-33640	H0120-01A4	19	180030
418-62-34130	H0120-01A2	33	180020
418-62-34130	H0120-01A2	42	180020
418-62-34130	H0120-01A4	32	180030
418-62-34192	H0110-01A0A	47	180010
418-62-34232	H4200-09A0	3	180170
418-62-34232	H4200-09A2	3	180180
418-62-34271	H0110-01A0A	46	180010
418-62-34421	H0120-01A2	29	180020
418-62-34421	H0120-01A4	28	180030
418-62-34440	H0120-01A2	30	180020
418-62-34440	H0120-01A4	29	180030
418-62-34470	H0120-01A2	32	180020
418-62-34470	H0120-01A4	31	180030
418-62-34480	H4200-02A0	18	180090
418-62-34480	H4200-02A0	7	180090
418-62-34490	H0120-01A2	29	180020
418-62-34490	H0120-01A4	28	180030
418-62-35111	C0110-01A0	3	060010

PARTS Nº	FIG. Nº	INDEX	PAGE
418-62-35111	C0110-04A0	7	060040
418-62-35111	F2760-03A0	10	150100
418-62-35111	K4460-01A0	5	240790
418-62-35120	K4460-01A0	6	240790
418-62-35130	H4200-09A0	32	180170
418-62-35130	H4200-09A2	32	180180
418-63-33121	Y1620-11A0	12	420200
418-63-33140	Y1620-11A0	13	420200
418-64-15810	H4410-51A0	K	180220
418-64-15820	H4410-51A0	1	180220
418-64-15830	H4410-51A0	9	180220
418-64-15840	H4410-51A0	10	180220
418-64-15850	H4410-51A0	11	180220
418-64-15870	H4410-51A0	7	180220
418-64-15880	H4410-51A0	6	180220
418-64-15890	H4410-51A0	5	180220
418-64-15910	H4410-51A0	3	180220
418-64-15920	H4410-51A0	17	180220
418-64-15930	H4410-51A0	16	180220
418-64-15940	H4410-51A0	15	180220
418-64-15950	H4410-51A0	4	180220
418-64-25400	H4410-01A0	17	180210
418-64-25400	H4410-51A0	1	180220
418-64-25410	H4410-51A0	2	180220
418-64-35513	H0122-01A0	9	180040
418-64-35524	H0122-01A0	12	180040
418-64-35530	H0122-02A0	10	180050
418-64-35550	H0122-02A0	23	180050
418-70-11430	T4150-01A0	5	330090
418-70-11440	T4150-01A0	4	330090
418-70-11910	T4110-01A0	19	330010
418-70-11910	T4110-01A1	19	330020
418-70-11921	T4110-02A0	4	330030
418-70-11941	T4150-01A0	2	330090
418-70-13140	T4130-01A1	15	330070
418-847-1120	T4130-01A1	2	330070
418-847-1160	T4130-01A1	11	330070
418-847-1170	T4130-01A1	12	330070
418-921-3510	K0210-59A5	1	240650
418-922-3610	K0210-33A9	18	240460
418-923-3941	K0210-53A5	4	240560
418-923-3941	K0210-53A6	4	240570
418-925-3350	K0210-54A5	23	240580
418-925-3350	K0210-54A6	5	240590
418-925-3360	K0210-54A5	24	240580
418-925-3360	K0210-54A6	6	240590
418-925-3450	K0210-54A5	1	240580
418-925-3461	K0210-54A5	9	240580
418-925-3471	K0810-01A1	5	240730
418-925-3471	K0810-01A2	5	240740

PARTS Nº	FIG. Nº	INDEX	PAGE
418-925-3481	K0810-01A1	6	240730
418-925-3481	K0810-01A2	6	240740
418-925-3490	E0201-01A0	3	120051
418-925-3540	K0210-51A5	1	240510
418-925-3540	K0210-51A6	1	240520
418-926-3463	K0210-54A5	3	240580
418-926-3470	K0210-52A5	8	240540
418-926-3470	K0210-52A5A	8	240541
418-926-3470	K0210-52A6	5	240550
418-926-3490	K0210-04A0	2	240080
418-926-3490	K0210-04A0	5	240080
418-926-3490	K0210-06A5	10	240100
418-926-3490	K0210-06A5	14	240100
418-926-3490	K0210-06A5	17	240100
418-926-3490	K0210-06A5	25	240100
418-926-3490	K0210-08A0	6	240120
418-926-3490	K0210-08A4	6	240130
418-926-3490	K0210-32A5	3	240430
418-926-3490	K0210-32A6	3	240440
418-926-3490	K0210-33A5	10	240450
418-926-3490	K0210-33A5	14	240450
418-926-3490	K0210-33A5	16	240450
418-926-3490	K0210-33A5	24	240450
418-926-3490	K0210-33A5	26	240450
418-926-3490	K0210-33A9	10	240460
418-926-3490	K0210-33A9	14	240460
418-926-3490	K0210-33A9	16	240460
418-926-3490	K0210-33A9	28	240460
418-926-3490	K0210-33A9	30	240460
418-926-3490	K0210-55A5A	48	240600
418-926-3490	K0210-56A5A	35	240610
418-926-3504	K0210-51A5	1	240510
418-926-3504	K0210-52A5	1	240540
418-926-3504	K0210-52A5A	1	240541
418-926-3504	K0210-53A5	1	240560
418-926-3504	K0210-54A5	1	240580
418-926-3504	K0210-55A5A	1	240600
418-926-3504	K0210-56A5A	1	240610
418-926-3504	K0210-57A5	1	240620
418-926-3504	K0210-58A5	1	240630
418-926-3510	K0210-51A5	8	240510
418-926-3510	K0210-51A6	5	240520
418-926-3520	K0210-51A5	14	240510
418-926-3520	K0210-51A6	11	240520
418-926-3530	K0210-51A5	10	240510
418-926-3530	K0210-51A6	7	240520
418-926-3581	K0210-51A5	12	240510
418-926-3581	K0210-51A6	9	240520
418-926-3591	K0210-51A5	13	240510
418-926-3591	K0210-51A6	10	240520

PARTS Nº	FIG. Nº	INDEX	PAGE
418-926-3613	K0210-26A2	12	240360
418-926-3613	K0210-26A9	12	240370
418-926-3613	K0210-26B0	12	240371
418-926-3652	K0210-26A2	13	240360
418-926-3652	K0210-26A9	13	240370
418-926-3652	K0210-26B0	13	240371
418-926-3660	K0210-09A0	25	240140
418-926-3672	K0210-09A0	19	240140
418-926-3711	K0210-59A0	1	240640
418-926-3722	K0210-59A0	8	240640
418-926-3742	K0210-35A0	1	240480
418-926-3752	K0210-35A0	2	240480
418-926-3760	K0210-57A5	5	240620
418-926-3892	K0210-53A5	21	240560
418-926-3892	K0210-53A6	9	240570
418-926-3912	K0210-55A5A	35	240600
418-926-3923	K0210-56A5A	22	240610
418-926-3932	K0210-53A5	1	240560
418-926-3932	K0210-53A6	1	240570
418-926-3971	K0210-53A5	12	240560
418-926-3971	K0210-53A6	7	240570
418-926-3H11	K0210-54A5	20	240580
418-926-3H11	K0210-54A6	2	240590
418-926-B400	K0210-51A6	1	240520
418-926-B400	K0210-52A6	1	240550
418-926-B400	K0210-53A6	1	240570
418-926-B400	K0210-54A6	1	240590
418-926-B490	K0210-52A6	1	240550
418-926-B510	K0210-52A6	2	240550
418-926-B630	K0210-51A6	8	240520
418-926-B640	K0210-09A0	19	240140
418-93-31410	K0210-58A5	1	240630
418-93-B1111	U0100-01A3	4	360020
418-93-B1120	U0100-02A2	13	360050
418-93-B1130	U0100-02A2	15	360050
418-93-B1140	U0100-02A2	14	360050
418-93-B1150	U0100-02A2	1	360050
418-93-B1160	U0100-02A2	12	360050
418-93-B1170	U0100-01A3	1	360020
418-93-B1180	U0100-02A1	13	360030
418-93-B1190	U0100-02A1	15	360030
418-93-B1210	U0100-02A1	14	360030
418-967-2150	K0810-01A3	2	240741
418-967-2230	K0810-01A3	3	240741
418-971-3110	J4190-01A6	14	210081
418-971-3110	J4190-01A7	14	210082
418-971-3120	J4190-01A6	17	210081
418-971-3120	J4190-01A7	17	210082
418-975-3114	M4510-01A3	5	270190
418-98-31110	V0300-01A3	14	390030

PARTS Nº	FIG. Nº	INDEX	PAGE
418-S61-3114	K0210-32A6	36	240440
418-S62-3110	K0210-09A0	1	240140
418-S62-3121	K0710-01A0	1	240680
418-S62-3140	K0210-09A0	4	240140
418-S62-3150	K0710-01A0	1	240680
418-S62-3160	K0710-01A0	2	240680
418-S62-3173	K0711-01A0	1	240690
418-S62-3183	K0711-01A0	2	240690
418-S62-3211	K0210-16A0	9	240230
418-S62-3221	K0210-16A0	11	240230
418-S62-3232	K0711-01A0	30	240690
418-S62-3242	K0711-01A0	20	240690
418-S62-3251	K0711-01A0	23	240690
418-S62-3261	K0711-01A0	26	240690
418-S62-3291	K0711-01A0	16	240690
418-S62-3310	K0711-01A0	15	240690
418-S62-3322	K0711-03A0	3	240710
418-S62-3340	K0711-01A0	7	240690
418-S62-3350	K0210-15A0	7	240220
418-S62-3350	K0210-16A0	4	240230
418-T80-3281	K0210-12A0A	29	240190
418-T80-3281	K0210-13A0	5	240200
418-T80-3281	K4450-01A0	23	240780
418-U77-3510	K0210-11A4	13	240180
418-U77-3520	K0210-11A4	8	240180
418-U77-3531	K0210-11A4	14	240180
418-U77-3540	K0210-11A4	24	240180
418-U77-3550	K0210-11A4	21	240180
418-U77-3560	K0210-11A4	25	240180
418-U77-3570	K0210-11A4	26	240180
418-U77-3580	K0210-11A4	28	240180
418-U77-3590	K0210-11A4	22	240180
418-U77-3670	K0210-11A4	11	240180
418-U77-3681	K0210-08A4	4	240130
418-U77-3761	K0210-10A4	13	240160
418-V00-3210	U0100-02A1	1	360030
418-V00-3220	U0100-02A1	12	360030
418-Z21-3150	B0110-01A1	48	030030
419-01-11162	B0100-01A0	10	030010
419-01-11162	B0100-01A0	12	030010
419-01-11162	F4810-01A0	3	150230
419-01-11162	F4810-01A0	5	150230
419-01-31311	A5210-01B5	13	030770
419-01-31320	A5210-01B5	18	030770
419-01-31330	A5210-01B5	23	030770
419-01-B3120	A5210-01B5	18	030770
419-02-31120	B0300-01A0	2	030050
419-02-31130	B0300-01A0	1	030050
419-03-33211	C0110-01A0	1	060010
419-03-33211	C0110-04A0	5	060040

PARTS N°	FIG. N°	INDEX	PAGE
419-06-23420	E0120-02A1	20	120030
419-06-31333	K0210-20A5	20	240280
419-06-31333	K0210-20A9	21	240290
419-06-31343	K0210-20A5	23	240280
419-06-31343	K0210-20A9	24	240290
419-06-31370	E0120-01A1	33	120020
419-06-31392	E0201-01A0	9	120051
419-06-31541	K0210-32A5	23	240430
419-06-32332	E0202-02A0	17	120070
419-09-11110	T4110-01A0	5	330010
419-09-11110	T4110-01A0	8	330010
419-09-11110	T4110-01A1	5	330020
419-09-11110	T4110-01A1	8	330020
419-09-11120	Y1622-01A0	16	420210
419-09-11120	Y1622-01A0	3	420210
419-09-11150	H4200-06A0	4	180140
419-09-11150	H4200-08A0	16	180160
419-09-11150	H4200-09A0	35	180170
419-09-11150	H4200-09A2	35	180180
419-15-12140	F2420-52A0	5	150040
419-15-13591	F2420-54A0	2	150060
419-15-13591	F2420-54A0A	2	150061
419-15-13660	F2420-54A0	4	150060
419-15-13660	F2420-54A0A	4	150061
419-18-31331	K0210-13A0	1	240200
419-22-11421	F4400-52A0	30	150140
419-22-11820	F4400-52A0	8	150140
419-22-11820	F4500-52A0	8	150200
419-22-12510	F4400-51A0	5	150130
419-22-12510	F4500-51A0	5	150190
419-22-12570	F4400-51A0	6	150130
419-22-12570	F4500-51A0	6	150190
419-22-12870	F4400-01A0	2	150120
419-22-12870	F4500-01A0	2	150180
419-30-11630	S0110-01A3	1	300020
419-30-B1200	S0110-01A3	1	300020
419-33-11460	F4400-53A0	4	150150
419-33-11460	F4500-53A0	4	150210
419-43-17920	C0110-03A0	1	060030
419-43-17920	C0110-03A0	7	060030
419-43-17920	H0122-01A0	16	180040
419-43-17920	H0122-02A0	26	180050
419-43-17920	H4200-06A0	24	180140
419-43-17920	K0210-29A0	2	240400
419-43-17920	K0210-29A0	6	240400
419-43-17920	K0210-30A0	23	240410
419-43-17920	K0210-30A0	27	240410
419-43-17930	H0120-01A2	10	180020
419-43-17930	H0120-01A4	10	180030
419-43-17930	H4200-04A2	13	180110
419-43-17930	H4200-13A2	4	180200
419-43-17930	K0210-29A0	5	240400
419-43-17930	K0210-30A0	26	240410
419-46-12260	J4140-01A0	10	210060
419-46-12280	J4140-01A0	11	210060
419-46-12290	J4140-01A0	12	210060
419-54-16880	K0210-55A5A	49	240600
419-54-16880	K0210-56A5A	36	240610
419-54-31140	M4100-04A0	18	270040
419-54-32625	K0210-06A5	1	240100
419-54-32672	K0210-06A5	8	240100
419-54-32681	E0201-01A0	8A	120051
419-54-B4110	M4200-01A0	23	270130
419-54-B4130	M4100-03A0	1	270030
419-54-B4131	M4100-03A0	1	270030
419-54-B4140	M4100-03A0	11	270030
419-54-B4141	M4100-03A0	11	270030
419-60-35142	H0110-01A0A	11	180010
419-60-35152	H0110-01A0A	11	180010
419-60-35152	V0100-01A1	2	390010
419-62-13460	H4200-03A0	7	180100
419-62-31710	F2430-01A0	15	150070
419-70-11440	T4110-01A0	16	330010
419-70-11440	T4110-01A1	16	330020
419-70-11450	T4110-01A0	16	330010
419-70-11450	T4110-01A1	16	330020
419-70-11871	T4110-01A0	3	330010
419-70-11871	T4110-01A1	3	330020
419-70-13180	T4130-01A1	20	330070
419-70-13180	T4130-01A1	9	330070
419-70-13190	T4130-01A1	9	330070
419-70-13190	T4130-01A1	20	330070
419-923-2130	K0210-53A5	16	240560
419-923-2130	K0210-53A5	18	240560
419-926-3620	K0210-09A0	16	240140
419-926-3630	K0210-09A0	23	240140
419-X13-1100	S0120-01A0	1	300030
419-X17-1110	S0120-01A3	1	300060
421-06-22820	E0202-02A0	7	120070
421-06-22830	E0202-02A0	6	120070
421-06-22840	E0202-02A0	8	120070
421-06-22880	E0202-02A0	9	120070
421-06-22910	E0202-02A0	10	120070
421-06-22920	E0202-02A0	11	120070
421-06-23320	K0210-36A0	1	240490
421-06-23320	M4100-04A0	35	270040
421-06-23330	K0210-36A0	1	240490
421-06-23330	M4100-04A0	35	270040
421-06-23350	M4100-04A0	35	270040
421-06-24230	E0120-01A1	22	120020
421-06-24230	E0120-01A1	8	120020
421-06-26110	K0210-18A0	1	240260
421-06-26120	K0210-18A0	1	240260
421-06-26130	K0210-18A0	2	240260
421-06-26140	K0210-18A0	3	240260
421-06-26150	K0210-18A0	4	240260
421-06-26160	K0210-18A0	5	240260
421-06-26210	K0210-53A5	15	240560
421-06-26220	K0210-22A5	9	240310
421-06-31510	K0210-25A5	2	240350
421-06-36232	K0210-22A5	15	240310
421-06-36241	K0210-22A5	16	240310
421-07-11550	K0210-15A0	11	240220
421-07-11550	K0713-01A0	14	240720
421-07-15110	K0210-19A0	3	240270
421-07-21280	K0210-09A0	3	240140
421-07-21810	K0210-16A0	10	240230
421-07-23420	K0210-09A0	31	240140
421-07-23600	K0210-03A0	10	240060
421-07-23610	K0210-03A0	10	240060
421-07-23620	K0210-03A0	17	240060
421-07-23640	K0210-03A0	17	240060
421-07-23660	K0210-03A0	2	240060
421-07-23660	K0210-03A5	2	240070
421-07-23680	K0210-03A0	28	240060
421-07-23680	K0210-03A5	3	240070
421-07-23751	K0210-03A0	5	240060
421-07-23771	K0210-03A0	16	240060
421-07-23810	K0210-02A0	17	240050
421-07-23820	K0210-02A0	18	240050
421-07-23870	K0210-32A6	24	240440
421-07-23980	K0210-16A0	5	240230
421-07-23990	K0210-02A0	7	240050
421-07-31240	K0210-09A0	5	240140
421-07-31260	K0210-09A0	2	240140
421-07-31420	K0210-09A0	5	240140
421-09-12322	E0120-01A1	11	120020
421-09-12322	E0120-01A1	25	120020
421-09-12322	M4100-02A0	9	270020
421-09-12780	K0210-06A5	21	240100
421-09-12780	K0210-33A5	19	240450
421-09-12780	K0210-33A9	23	240460
421-09-21210	K0210-57A5	12	240620
421-09-21220	K0210-10A0	15	240150
421-09-21220	K0210-10A4	26	240160
421-09-21230	K0210-10A0	4	240150
421-09-21230	K0210-10A4	14	240160
421-09-21230	K0210-10A4	4	240160
421-09-21260	K0210-32A5	15	240430
421-09-21260	K0210-32A6	21	240440

PARTS N°	FIG. N°	INDEX	PAGE
421-09-21380	K0210-09A0	35	240140
421-09-21420	J4190-01A0	10	210070
421-09-21420	J4190-01A4	10	210080
421-09-21420	J4190-01A6	10	210081
421-09-21420	J4190-01A7	10	210082
421-09-21460	K0210-59A0	18	240640
421-09-31310	K0210-54A5	6	240580
421-09-31310	K0210-55A5A	50	240600
421-09-31310	K0210-56A5A	37	240610
421-40-22110	K0210-30A0	1	240410
421-40-22120	K0210-30A0	1	240410
421-40-22140	K0210-30A0	2	240410
421-40-22150	K0210-30A0	3	240410
421-40-22160	K0210-30A0	4	240410
421-40-22170	K0210-30A0	5	240410
421-40-22180	K0210-30A0	6	240410
421-40-22210	K0210-30A0	7	240410
421-43-11261	K4410-01A0	6	240770
421-43-11330	K4410-01A0	10	240770
421-43-22562	K4460-02A0	22	240800
421-43-22571	K4460-02A0	25	240800
421-43-22912	K4460-02A0	35	240800
421-43-27920	K4460-02A0	23	240800
421-43-28410	K0210-10A0	5	240150
421-43-28410	K0210-10A4	12	240160
421-43-28410	K0210-10A4	5	240160
421-43-28431	K0210-10A4	15	240160
421-43-31510	K0210-27A0	26	240380
421-43-31520	K0210-06A5	27	240100
421-43-31551	K0210-06A5	30	240100
421-46-15132	J4210-01A0	13	210090
421-46-15132	J4210-01A0	9	210090
421-54-13850	K0210-16A0	8	240230
421-54-15440	K0210-53A5	26	240560
421-54-15440	K0210-53A6	14	240570
421-54-15520	K0210-19A0	5	240270
421-54-21850	M4200-01A0	12	270130
421-54-21850	M4200-01A0	6	270130
421-54-22520	K0210-05A0	4	240090
421-54-22520	K0210-06A5	3	240100
421-54-22520	K0210-06A5	35	240100
421-54-22520	K0210-32A5	19	240430
421-54-22520	K0210-32A6	25	240440
421-54-22520	K0210-33A5	3	240450
421-54-22520	K0210-33A9	3	240460
421-54-22750	K0210-05A0	8	240090
421-54-22750	K0210-06A5	20	240100
421-54-22750	K0210-32A5	14	240430
421-54-22750	K0210-32A6	20	240440
421-54-25610	M4410-01A2	6	270170
421-54-25610	M4410-01A3	6	270180
421-54-25620	M4410-01A2	6	270170
421-54-25620	M4410-01A3	6	270180
421-54-25630	M4410-01A2	6	270170
421-54-25630	M4410-01A3	6	270180
421-54-25640	M4410-01A2	6	270170
421-54-25640	M4410-01A3	6	270180
421-54-25650	M4410-01A2	6	270170
421-54-25650	M4410-01A3	6	270180
421-54-25660	M4410-01A2	6	270170
421-54-25660	M4410-01A3	6	270180
421-54-31740	M4100-03A0	12	270030
421-54-31740	M4100-03A0	2	270030
421-54-32790	K0210-33A5	22	240450
421-54-32790	K0210-33A9	26	240460
421-56-11970	K0210-55A5A	16	240600
421-56-11970	K0210-55A5A	4	240600
421-56-21720	K0210-55A5A	51	240600
421-56-21720	K0210-56A5A	38	240610
421-60-11622	H0110-01A0A	2	180010
421-62-18550	F2760-02A0	43	150090
421-62-23710	F2760-02A0	44	150090
421-62-31110	H4410-01A0	18	180210
421-70-11280	D0100-01A0	28	090010
421-70-11280	T4110-01A0	18	330010
421-70-11280	T4110-01A0	23	330010
421-70-11280	T4110-01A1	18	330020
421-70-11280	T4110-01A1	23	330020
421-70-11280	T4110-02A0	3	330030
421-70-11280	T4110-02A0	7	330030
421-70-11280	T4140-01A0	7	330080
421-70-11280	T4150-01A0	7	330090
421-921-3250	K0210-51A9	1	240530
421-922-3620	K0210-33A9	19	240460
421-925-3140	K0810-01A2	2	240740
421-925-3180	E0201-01A0	18	120051
421-925-3460	K0210-16A9	12	240240
421-925-3510	K0810-01A1	1	240730
421-925-3520	K0210-46A5	1	240500
421-926-3612	K0210-53A5	7	240560
421-926-3612	K0210-53A6	6	240570
421-926-3790	K0210-51A5	11	240510
421-926-3790	K0210-51A6	8	240520
421-S33-3282	K0210-01A0	13	240040
421-S33-3282	K0210-01A0	4	240040
423-04-11362	D0100-01A0	3	090010
423-07-23110	K0210-03A0	11	240060
423-07-23120	K0210-03A0	12	240060
423-07-23130	K0210-03A0	13	240060
423-07-23140	K0210-03A0	14	240060
423-07-23150	K0210-03A0	15	240060
423-07-23160	K0210-03A0	18	240060
423-07-23170	K0210-03A0	19	240060
423-07-23180	K0210-03A0	20	240060
423-07-23190	K0210-03A0	21	240060
423-07-23211	K0210-03A0	22	240060
423-07-23530	K0210-09A0	11	240140
423-22-11240	F2420-54A0	5	150060
423-22-11240	F2420-54A0A	5	150061
423-56-21910	K0210-52A5	4	240540
423-56-21910	K0210-52A5A	4	240541
423-70-13180	T4130-01A1	3	330070
423-70-13180	T4130-01A1	13	330070
423-70-13180	T4130-01A1	3	330070
4239254220	K0210-56A5A	15	240610
423-925-4220	K0210-55A5A	21	240600
423-925-4230	K0210-55A5A	22	240600
423-925-4230	K0210-56A5A	16	240610
423-926-3223	K0210-55A5A	52	240600
423-926-3233	K0210-56A5A	39	240610
423-926-3860	K0210-55A5A	55	240600
423-926-3860	K0210-56A5A	42	240610
423-947-1101	K0350-01A0	1	240670
423-947-1110	K0350-01A0	1	240670
423-947-1121	K0350-01A0	2	240670
423-947-2150	K0350-01A0	3	240670
423-950-2120	K0210-16A9	1	240240
423-950-2130	K0210-16A9	2	240240
423-X19-1130	S0120-01A4	1	300070
424-06-23230	E0300-01A0	14	120110
424-06-23230	E0300-01A0	2	120110
424-09-12610	K0210-32A5	18	240430
424-43-11170	K0210-27A0	31	240380
424-43-11240	F4460-01A0	17	150170
424-43-11240	K4410-01A0	4	240770
424-46-11130	J4130-01A0	21	210050
424-926-3230	K0210-59A0	10	240640
424-926-3230	K0210-59A0	3	240640
424-926-3230	K0210-59A5	10	240650
424-926-3230	K0210-59A5	3	240650
424-926-3240	K0210-59A0	2	240640
424-926-3240	K0210-59A0	9	240640
424-926-3240	K0210-59A5	2	240650
424-926-3240	K0210-59A5	9	240650
424-926-3260	K0210-55A5A	53	240600
424-926-3270	K0210-56A5A	40	240610
424-926-3280	K0210-59A0	17	240640
424-926-3490	K0210-53A5	17	240560
424-926-3630	K0210-55A5A	54	240600
424-926-3630	K0210-56A5A	41	240610

PARTS Nº	FIG. Nº	INDEX	PAGE
425-07-21111	K0210-09A0	1	240140
425-07-21152	K0210-09A0	6	240140
425-43-11180	K0210-27A0	28	240380
425-54-15250	K0210-53A5	5	240560
425-54-15250	K0210-53A6	5	240570
425-S67-2160	K0810-01A2	1	240740
425-S67-2180	K0810-01A2	1	240740
426-06-31120	F4400-53A0	12	150150
426-07-11130	B0110-01A0	16	030020
426-07-11130	B0110-01A1	16	030030
426-09-11130	K0210-10A0	30	240150
426-09-11130	K0210-10A4	41	240160
426-09-11210	E0200-01A4	3	120040
426-09-11230	E0202-01A2	6	120060
426-56-21990	K0210-57A5	11	240620
426-56-23360	K0210-36A0	1	240490
427-07-22120	K0210-09A0	18	240140
42A-16-11210	C0400-01A0A	22	060060
42A-16-11231	F4460-01A0	11	150170
42A-942-1270	B0110-01A0	35	030020
42A-942-1270	B0110-01A1	35	030030
42C-07-13131	K0210-02A0	4	240050
561-40-41210	K4100-01A0	6	240750
565-06-13212	A5090-01A2	1	030760
566-32-11620	F4400-53A0	5	150150
566-32-11620	F4500-53A0	5	150210
567-07-15221	K0713-01A0	2	240720
567-07-15222	K0713-01A0	2	240720
569-06-61960	E0201-01A0	10	120051
569-06-61960	K0210-23A0	4	240320
569-06-61960	K0210-32A6	28	240440
569-06-61960	K0210-32A6	37	240440
569-06-61970	K0210-23A0	5	240320
569-06-61970	K0210-32A6	29	240440
56B-06-15610	K4504-01A0	7	240840
56B-06-15610	T4110-03A0	7	330040
56B-88-12320	K0210-12A0A	34	240190
56B-88-12320	K4460-01A0	9	240790
56D-15-12710	F2420-52A0	3	150040
56D-15-12710	F2420-54A0	19	150060
56D-15-12710	F2420-54A0A	19	150061
600-021-1930	A9810-01G0	2	030940
600-181-1930	A1410-01D3	9	030100
600-181-3850	M4100-09A0	1	270080
600-184-1310	A1410-01D3	5	030100
600-184-1350	A1410-01D3	6	030100
600-184-1370	A1410-01D3	4	030100
600-184-2810	A1410-01D3	1	030100
600-184-2810	A1410-01D3	10	030100
600-185-3100	A1410-01D3	1	030100
600-185-3110	A1410-01D3	2	030100
600-185-3120	A1410-01D3	3	030100
600-411-1191	A5210-01B5	4	030770
600-411-2120	A5210-01B5	2	030770
600-411-2130	A5210-01B5	3	030770
600-411-2410	A5210-01B5	1	030770
600-815-1770	A1010-01D0	2	030030
600-815-2170	B0110-02A0	22	030040
600-815-2170	B9999-Z1E7	1	030950
600-815-7870	B9999-01P9	2	030960
600-815-7870	E0202-02A0	3	120070
600-815-9260	A4510-01A5	1	030680
600-815-9270	B9999-01P9	1	030960
600-815-9270	E0202-02A0	2	120070
600-861-6420	A601P-01B1	1	030780
600-861-6420	A601P-02B1	1	030790
600-863-4210	A621P-01A4	1	030840
600-863-4210	A621P-02A4	1	030850
6130-12-1961	A6510-01A0	3	030870
6130-32-1361	A408P-01B0	9	030590
6130-32-1361	A408P-01B1	9	030600
6131-11-4520	A1410-01D3	7	030100
6131-22-3750	B0110-02A0	9	030040
6134-11-5120	A1570-01E7	6	030170
6134-12-5120	H2260-01A0	10	180070
6136-21-5770	A211V-01A2Z	1	030310
6136-21-5870	A211V-01A2Z	2	030310
6136-21-5870	A8126-02A1	2	030930
6136-21-7120	A207S-01A0	1	030270
6136-21-7120	F2420-01A0	15	150010
6136-21-7180	F2420-01A0	15	150010
6136-21-7180	F2420-02A3	1	150020
6136-21-7190	F2420-01A0	16	150010
6141-71-1710	A417P-01B4	7	030640
6141-71-1710	B9999-01R1	6	030980
6144-71-5750	A423V-01A0Z	1	030660
6144-71-5750	A5210-01B5	28	030770
6144-71-5760	B9999-01R1	7	030980
6144-71-5760	D0100-02A0	5	090020
6150-11-5710	A1610-01H6	2	030180
6150-71-7130	F2760-01A0	34	150080
6150-71-7130	F2760-01A1	36	150081
6151-71-5910	A5210-01B5	19	030770
6162-63-1440	A502P-01D2	5	030730
6202-72-5530	A5210-01B5	22	030770
6202-81-6810	K0711-01A0	14	240690
6202-81-6821	A1610-01H6	14	030180
6204-73-5750	D0100-02A0	10	090020
6204-81-6740	A1570-01E7	11	030170
6204-81-9640	A4510-01A5	8	030680
6206-11-4590	A1570-01E7	10	030170
6206-11-4590	A1570-01E7	8	030170
6207-51-7690	A1539-01b8	4	030160
6207-51-7690	A153T-01C6	3	030140
6207-51-7690	A8126-01A1	1	030920
6212-11-4780	A6510-01A0	4	030870
6215-81-9510	A2019-01A2	16	030220
6215-81-9710	A2019-01A2	17	030220
6215-81-9710	A201V-01A2Z	3	030210
6215-81-9710	A408P-01B0	12	030590
6215-81-9710	A408P-01B1	12	030600
6215-81-9710	A8126-02A1	2	030930
6217-11-4590	A1410-01D3	29	030100
6643-11-4641	A1410-01D3	8	030100
6731-11-1371	A1009-01A4	1	030010
6731-21-1170	A2019-01A2	1	030220
6731-21-1190	A2019-01A2	10	030220
6731-21-1190	A8126-02A1	2	030930
6731-21-1210	A2019-01A2	9	030220
6731-21-4220	A8126-02A1	2	030930
6731-21-4240	A2219-01B4	2	030340
6731-41-4511	A1009-01A4	14	030010
6731-51-1111	A301P-01A2	2	030470
6731-51-8150	A153T-01C6	7	030140
6731-51-8150	A8126-02A1	2	030930
6731-51-8170	A153T-01C6	5	030140
6731-51-8190	A153T-01C6	1	030140
6731-61-2151	A331P-01B2	8	030480
6731-61-6260	A501R-01A0	2	030700
6731-62-1110	A5019-01A0	1	030720
6731-81-8710	A204R-01A0	1	030230
6731-91-1550	A267P-01A2Z	1	030430
6732-11-1170	A1009-01A4	3	030010
6732-11-1180	A1009-01A4	4	030010
6732-11-1610	A1009-01A4	15	030010
6732-11-1620	A1009-01A4	16	030010
6732-11-1640	A241P-01A0	11	030390
6732-11-1910	A1009-01A4	5	030010
6732-11-1910	A131V-01A0	1	030090
6732-11-1910	A2019-01A2	13	030220
6732-11-1920	A1009-01A4	6	030010
6732-11-1920	A131P-01A8	2	030070
6732-11-1920	A2019-01A2	23	030220
6732-11-1930	A1009-01A4	7	030010
6732-11-1930	A331P-01B2	1	030480
6732-11-1970	A1030-01A1Z	1	030040
6732-11-3850	A4219-01B1	6	030650
6732-11-3850	A8126-01A1	1	030920
6732-11-4150	A131P-01A8	5	030070
6732-11-4160	A131V-01A0	4	030090

PARTS Nº	FIG. Nº	INDEX	PAGE
6732-11-4170	A131P-01A8	4	030070
6732-11-4811	A131P-01A8	3	030070
6732-11-4811	A131R-01A0	2	030080
6732-11-4811	A8126-01A1	1	030920
6732-11-8130	A111P-01A3	1	030060
6732-11-8150	A111P-01A3	5	030060
6732-11-8150	A206P-01A7	2	030250
6732-11-8181	A111P-01A3	3	030060
6732-11-8181	A8126-01A1	1	030920
6732-11-8181	B9999-01R0	1	030970
6732-11-8181	B9999-01T5	1	030990
6732-11-8210	A111P-01A3	4	030060
6732-11-8210	A206P-01A7	1	030250
6732-11-8210	A8126-01A1	1	030920
6732-11-8210	A8126-02A1	2	030930
6732-11-8210	B9999-01R0	2	030970
6732-11-8210	B9999-01T5	2	030990
6732-21-1210	A2019-01A2	4	030220
6732-21-1411	A2019-01A2	5	030220
6732-21-1611	A2019-01A2	6	030220
6732-21-1812	A2019-01A2	8	030220
6732-21-1820	A2019-01A2	7	030220
6732-21-1830	A2019-01A2	2	030220
6732-21-1910	A2019-01A2	11	030220
6732-21-1910	A2019-01A2	3	030220
6732-21-1920	A1050-01A0	1	030050
6732-21-1920	B0100-01A0	15	030010
6732-21-1930	A2019-01A2	22	030220
6732-21-1960	A2019-01A2	16	030220
6732-21-1980	A501S-01A0	1	030710
6732-21-3120	A2019-01A2	26	030220
6732-21-3140	A2049-01A1	5	030240
6732-21-3150	A2049-01A1	6	030240
6732-21-3160	A2049-01A1	10	030240
6732-21-3180	A2049-01A1	8	030240
6732-21-3190	A281P-01A0	1	030440
6732-21-3220	A281P-01A0	2	030440
6732-21-3220	A281P-01A1	3	030450
6732-21-3220	A8126-02A1	2	030930
6732-21-3811	A2049-01A1	2	030240
6732-21-3811	A8126-02A1	2	030930
6732-21-3870	A2049-01A1	7	030240
6732-21-3870	A8126-02A1	2	030930
6732-21-3880	A2049-01A1	9	030240
6732-21-3880	A8126-02A1	2	030930
6732-21-3990	A4510-01A5	16	030680
6732-21-4120	A2219-01B4	10	030340
6732-21-4130	A2219-01B4	8	030340
6732-21-4150	A2219-01B4	11	030340
6732-21-4161	A2219-01B4	12	030340
6732-21-4161	A8126-02A1	2	030930
6732-21-4171	A2219-01B4	4	030340
6732-21-4171	A8126-02A1	2	030930
6732-21-4220	A2219-01B4	7	030340
6732-21-4232	A2219-01B4	6	030340
6732-21-4290	A2219-01B4	5	030340
6732-21-5160	A211R-01A2	2	030280
6732-21-5160	A2219-01B4	13	030340
6732-21-5160	A411S-01C0	30	030630
6732-21-5160	A601T-01B1	2	030810
6732-21-5160	A601T-01B1	8	030810
6732-21-5170	A211S-01A0	2	030300
6732-21-5270	A2119-01B7	6	030320
6732-21-5480	A219P-01A6	2	030330
6732-21-5510	A2119-01B7	2	030320
6732-21-5530	A2019-01A2	20	030220
6732-21-5530	A219P-01A6	1	030330
6732-21-6120	A2019-01A2	12	030220
6732-21-6130	A2019-01A2	19	030220
6732-21-6140	A2019-01A2	9	030220
6732-21-6150	A2319-01A0	2	030360
6732-21-6160	A2019-01A2	21	030220
6732-21-6610	A211R-01A2	1	030280
6732-21-6630	A2119-01B7	4	030320
6732-21-6630	A211R-01A2	3	030280
6732-21-6630	A211R-01A6	1	030290
6732-21-6630	A211R-01A6	2	030290
6732-21-6630	A502P-01D2	10	030730
6732-21-6630	A601T-01B1	9	030810
6732-21-9330	A261P-01A1	2	030420
6732-31-1211	A2319-01A0	3	030360
6732-31-2350	A2359-01A2	6	030380
6732-31-2410	A2359-01A2	2	030380
6732-31-2420	A2359-01A2	3	030380
6732-31-3101	A2359-01A2	7	030380
6732-31-3111	A2359-01A2	7	030380
6732-31-3132	A2359-01A2	8	030380
6732-31-3311	A2359-01A2	9	030380
6732-31-3410	A2359-01A2	10	030380
6732-31-4120	A223P-01C0	3	030350
6732-31-4130	A223P-01C0	4	030350
6732-31-4180	A223P-01C0	1	030350
6732-31-8120	A233P-01A0	1	030370
6732-38-2350	A8110-04A9	4	030910
6732-39-2350	A8110-04A9	4	030910
6732-41-1220	A2419-01A0	4	030410
6732-41-1231	A2419-01A0	2	030410
6732-41-1260	A2419-01A0	5	030410
6732-41-1260	A5019-01A0	3	030720
6732-41-1260	A501P-01A3	3	030690
6732-41-1280	A2419-01A0	3	030410
6732-41-2112	A241R-01A0	1	030400
6732-41-3111	A241P-01A0	12	030390
6732-41-4430	A1009-01A4	13	030010
6732-41-4520	A1009-01A4	10	030010
6732-41-4520	A1009-01A4	12	030010
6732-41-4540	A8126-01A1	1	030920
6732-41-4541	A1009-01A4	8	030010
6732-41-5160	A241P-01A0	3	030390
6732-41-5170	A241P-01A0	2	030390
6732-41-5180	A241P-01A0	1	030390
6732-41-5200	A241P-01A0	7	030390
6732-41-5400	A241P-01A0	4	030390
6732-51-4420	A331P-01B2	7	030480
6732-51-4420	A8126-02A1	2	030930
6732-51-4432	A331P-01B2	9	030480
6732-51-4432	A8126-02A1	2	030930
6732-51-5130	A207S-01A0	2	030270
6732-51-5130	A261P-01A1	1	030420
6732-51-8370	A153T-01C6	4	030140
6732-51-8480	A153T-01C6	10	030140
6732-61-2311	A331P-01B2	11	030480
6732-61-2311	A8126-02A1	2	030930
6732-61-3110	A408P-01B0	2	030590
6732-61-3110	A408P-01B1	2	030600
6732-61-3160	A504P-01A3	1	030750
6732-61-3170	A502P-01D2	9	030730
6732-61-3503	A502P-01D2	1	030730
6732-61-3513	A502P-01D2	1	030730
6732-61-3533	A502P-01D2	2	030730
6732-61-3542	A502P-01D2	6	030730
6732-61-3750	A502P-01D2	8	030730
6732-61-4120	A601S-01F3	1	030800
6732-61-4220	A601S-01F3	4	030800
6732-61-6120	A501R-01A0	1	030700
6732-61-6130	A501R-01A0	3	030700
6732-61-6130	A8126-02A1	2	030930
6732-61-6140	A173P-01B1	1	030190
6732-61-6140	A331P-01B2	12	030480
6732-61-6140	A411P-01A0	4	030610
6732-61-6170	A173P-01B1	10	030190
6732-61-6180	A173P-01B1	2	030190
6732-61-6190	A173P-01B1	9	030190
6732-61-6240	A173P-01B1	6	030190
6732-61-6240	A8126-01A1	1	030920
6732-61-6250	A173P-01B1	5	030190
6732-61-6250	A8126-01A1	1	030920
6732-61-6310	A173P-01B1	4	030190
6732-61-6330	A173P-01B1	7	030190
6732-61-8300	A5210-01B5	1	030770

PARTS N°	FIG. N°	INDEX	PAGE
6732-71-3210	A411S-01C0	32	030630
6732-71-3220	A153T-01C6	2	030140
6732-71-3220	A206P-01A7	14	030250
6732-71-3220	A2119-01B7	3	030320
6732-71-3220	A417P-01B4	1	030640
6732-71-3690	A408P-01B1	10	030600
6732-71-5450	A408P-01B0	11	030590
6732-71-5450	A408P-01B1	11	030600
6732-71-5740	A4010-01B0Z	1	030580
6732-71-5760	A411S-01C0	26	030630
6732-71-6112	A411P-01A0	1	030610
6732-71-6112	B9999-01R0	4	030970
6732-71-6112	B9999-01T5	4	030990
6732-71-6220	A411P-01A0	3	030610
6732-71-6230	A4219-01B1	5	030650
6732-71-6240	A411S-01C0	2	030630
6732-71-6260	A411S-01C0	3	030630
6732-71-6260	A4219-01B1	3	030650
6732-71-6260	A8126-01A1	1	030920
6732-71-6330	A411P-01A0	2	030610
6732-71-6340	A411P-01A0	2	030610
6732-71-6510	A401R-01B2	3	030570
6732-71-6510	A417P-01B4	5	030640
6732-81-5120	A131R-01A0	1	030080
6732-81-5250	A281P-01A1	1	030450
6732-81-6170	A601S-01F3	2	030800
6732-81-6170	B9999-01R0	5	030970
6732-81-6170	V0100-01A1	3	390010
6732-81-6560	A601T-01B1	6	030810
6732-81-6690	A601T-01B1	7	030810
6732-81-6811	A621S-01A7Z	1	030860
6732-81-6811	A8126-02A1	2	030930
6732-81-8220	A151R-01A0	1	030110
6732-81-8220	A8126-01A1	1	030920
6732-81-8810	A1539-01b8	1	030160
6732-81-8820	A1539-01b8	2	030160
6732-81-8830	A1539-01b8	5	030160
6732-81-8830	A8126-01A1	1	030920
6732-81-8860	A8126-01A1	1	030920
6732-81-9511	A4510-01A5	5	030680
6732-81-9520	A4510-01A5	4	030680
6733-21-5520	A8126-02A1	2	030930
6733-71-5680	A211V-01A2Z	3	030310
6734-11-3610	A4219-01B1	4	030650
6734-11-3620	A4219-01B1	4	030650
6734-11-3630	A4219-01B1	4	030650
6734-11-3640	A4219-01B1	4	030650
6734-11-3650	A4219-01B1	4	030650
6734-11-3660	A4219-01B1	4	030650
6734-11-3670	A4219-01B1	4	030650
6734-11-3680	A4219-01B1	4	030650
6734-11-3690	A4219-01B1	4	030650
6734-11-3710	A4219-01B1	4	030650
6734-11-3720	A4219-01B1	4	030650
6734-11-3730	A4219-01B1	4	030650
6734-11-3740	A4219-01B1	4	030650
6734-11-3750	A4219-01B1	4	030650
6734-11-3760	A4219-01B1	4	030650
6734-11-3770	A4219-01B1	4	030650
6734-11-3780	A4219-01B1	4	030650
6734-11-3790	A4219-01B1	4	030650
6734-11-3810	A4219-01B1	4	030650
6734-11-3820	A4219-01B1	4	030650
6734-11-3830	A4219-01B1	4	030650
6734-11-3840	A4219-01B1	4	030650
6734-11-3850	A4219-01B1	4	030650
6734-11-3860	A4219-01B1	4	030650
6734-11-3870	A4219-01B1	4	030650
6734-11-3880	A4219-01B1	4	030650
6734-11-3890	A4219-01B1	4	030650
6734-11-3910	A4219-01B1	4	030650
6734-11-3920	A4219-01B1	4	030650
6734-11-3930	A4219-01B1	4	030650
6734-11-5210	A411S-01C0	27	030630
6734-71-5520	A411S-01C0	10	030630
6734-71-5520	A411S-01C0	21	030630
6734-71-5610	A408P-01B0	5	030590
6734-71-5610	A408P-01B1	5	030600
6734-71-5710	A411S-01C0	18	030630
6734-71-5710	A411S-01C0	7	030630
6734-71-5720	A411S-01C0	20	030630
6734-71-5720	A411S-01C0	9	030630
6734-71-5741	A411S-01C0	11	030630
6734-71-5741	A411S-01C0	22	030630
6734-81-5220	A211S-01A0	1	030300
6734-81-5240	A337P-01A0	1	030490
6734-81-6410	B9999-01T5	5	030990
6735-01-1310	A2319-01A0	1	030360
6735-11-1821	A1009-01A4	17	030010
6735-11-1821	A8126-01A1	1	030920
6735-11-1840	A8110-01A9	5	030880
6735-11-1870	A8110-01A9	4	030880
6735-11-1910	A173P-01B1	3	030190
6735-11-4110	A131V-01A0	2	030090
6735-11-4150	A151T-01A2	2	030120
6735-11-4812	A131V-01A0	3	030090
6735-11-4812	A8126-01A1	1	030920
6735-11-5220	A151V-01A2	1	030130
6735-11-8120	A111P-01A3	2	030060
6735-21-1910	A2019-01A2	14	030220
6735-21-1920	A2019-01A2	14	030220
6735-21-1930	A2019-01A2	15	030220
6735-21-1930	A8126-02A1	2	030930
6735-21-1940	A2019-01A2	24	030220
6735-21-1950	A2019-01A2	24	030220
6735-21-1960	A2019-01A2	25	030220
6735-21-1960	A8126-02A1	2	030930
6735-21-3410	A281P-01A1	7	030450
6735-21-3420	A281P-01A1	5	030450
6735-21-3430	A281P-01A1	2	030450
6735-21-3450	A281P-01A1	4	030450
6735-21-3511	A2049-01A1	11	030240
6735-21-4191	A2219-01B4	1	030340
6735-21-4191	A8126-02A1	2	030930
6735-21-5140	A2119-01B7	5	030320
6735-21-5151	A283P-01A0	1	030460
6735-21-5170	A219P-01A6	3	030330
6735-21-5530	A153T-01C6	13	030140
6735-21-5530	A2019-01A2	18	030220
6735-26-8100	A8110-03A9	3	030900
6735-26-8110	A8110-03A9	3	030900
6735-26-8210	A8110-03A9	4	030900
6735-26-8210	A8110-03A9	6	030900
6735-26-8210	A8110-03A9	6	030900
6735-27-8100	A8110-03A9	3	030900
6735-27-8110	A8110-03A9	3	030900
6735-27-8210	A8110-03A9	4	030900
6735-27-8210	A8110-03A9	6	030900
6735-28-8100	A8110-03A9	3	030900
6735-28-8110	A8110-03A9	3	030900
6735-28-8200	A8110-03A9	5	030900
6735-28-8210	A8110-03A9	4	030900
6735-28-8210	A8110-03A9	6	030900
6735-28-8210	A8110-03A9	6	030900
6735-29-8100	A8110-03A9	3	030900
6735-29-8110	A8110-03A9	3	030900
6735-29-8210	A8110-03A9	4	030900
6735-29-8210	A8110-03A9	6	030900
6735-31-8120	A233P-01A0	2	030370
6735-41-1111	A2419-01A0	1	030410
6735-41-5550	A241P-01A0	6	030390
6735-41-5550	A241P-01A0	9	030390
6735-41-5560	A241P-01A0	5	030390
6735-41-5560	A241P-01A0	8	030390
6735-51-1120	A301P-01A2	1	030470
6735-51-5531	A2119-01B7	1	030320
6735-61-1101	A5019-01A0	1	030720
6735-61-1101	A501P-01A3	1	030690
6735-61-2110	A331P-01B2	10	030480
6735-61-2140	A331P-01B2	2	030480

PARTS N°	FIG. N°	INDEX	PAGE
6735-61-2160	A331P-01B2	5	030480
6735-61-2190	A331P-01B2	6	030480
6735-61-6411	A417P-01B4	3	030640
6735-61-6411	A8126-02A1	2	030930
6735-61-6471	A173R-01A0	1	030200
6735-61-8140	A5210-01B5	14	030770
6735-71-3220	A408P-01B0	4	030590
6735-71-3220	A408P-01B1	4	030600
6735-71-3220	A502R-01A1	1	030740
6735-71-5160	A411R-01A7	1	030620
6735-71-5170	A411R-01A7	5	030620
6735-71-5180	A411R-01A7	6	030620
6735-71-5190	A411R-01A7	7	030620
6735-71-5371	A417P-01B4	4	030640
6735-71-5411	A408P-01B0	15	030590
6735-71-5411	A408P-01B1	15	030600
6735-71-5420	A408P-01B0	16	030590
6735-71-5420	A408P-01B1	16	030600
6735-71-5430	A408P-01B0	17	030590
6735-71-5430	A408P-01B1	17	030600
6735-71-5460	A401R-01B2	1	030570
6735-71-5643	A411S-01C0	15	030630
6735-71-5653	A411S-01C0	16	030630
6735-71-5663	A411S-01C0	17	030630
6735-71-5820	A411S-01C0	12	030630
6735-71-5820	A411S-01C0	23	030630
6735-71-5830	A411S-01C0	19	030630
6735-71-5830	A411S-01C0	8	030630
6735-71-5840	A411S-01C0	13	030630
6735-71-5840	A411S-01C0	24	030630
6735-71-5860	A411S-01C0	14	030630
6735-71-5860	A411S-01C0	25	030630
6735-71-6510	A411R-01A7	2	030620
6735-71-6530	A411R-01A7	2	030620
6735-71-6750	A411R-01A7	3	030620
6735-81-5230	A6510-01A0	1	030870
6735-81-5230	A6510-01A0	2	030870
6735-81-8130	A1570-01E7	4	030170
6735-81-8710	A1570-01E7	3	030170
6735-K1-3001	A8126-02A1	2	030930
6735-K2-3001	A2219-01B4	3	030340
6736-11-1150	A1009-01A4	2	030010
6736-11-3420	A8126-01A1	1	030920
6736-11-5820	A8126-01A1	1	030920
6736-11-5830	A151T-01A2	1	030120
6736-13-3090	A4219-01B1	1	030650
6736-18-1310	A8110-01A9	3	030880
6736-19-1310	A8110-01A9	1	030880
6736-19-1410	A8110-01A9	2	030880
6736-21-3210	A2049-01A1	14	030240
6736-21-3210	A2049-01A1	3	030240
6736-21-3210	A601T-01B1	3	030810
6736-21-3310	A2049-01A1	12	030240
6736-21-3360	A207S-01A0	3	030270
6736-21-3360	A8126-02A1	2	030930
6736-21-3450	A2049-01A1	13	030240
6736-21-3450	A8126-02A1	2	030930
6736-21-5310	A2049-01A1	15	030240
6736-21-5310	A2049-01A1	4	030240
6736-21-5310	A207S-01A0	7	030270
6736-21-5320	A2219-01B4	14	030340
6736-21-7120	A281P-01A1	6	030450
6736-21-8110	A2319-01A0	4	030360
6736-21-8610	A2319-01A0	6	030360
6736-26-8140	A8110-03A9	5	030900
6736-27-8140	A8110-03A9	5	030900
6736-27-8620	A8110-03A9	5	030900
6736-28-8120	A8110-03A9	5	030900
6736-28-8620	A8110-03A9	5	030900
6736-28-8700	A8110-03A9	5	030900
6736-28-8720	A8110-03A9	5	030900
6736-29-1410	A8110-02A9	1	030890
6736-29-1420	A8110-02A9	2	030890
6736-29-2110	A8110-02A9	3	030890
6736-29-8140	A8110-03A9	5	030900
6736-29-8610	A8110-03A9	5	030900
6736-29-8700	A8110-03A9	5	030900
6736-29-8730	A8110-03A9	5	030900
6736-36-3400	A8110-04A9	1	030910
6736-37-3400	A8110-04A9	1	030910
6736-38-3400	A8110-04A9	1	030910
6736-39-1130	A8110-03A9	2	030900
6736-39-1220	A8110-03A9	1	030900
6736-39-3400	A8110-04A9	1	030910
6736-41-4110	A1009-01A4	9	030010
6736-41-4210	A1009-01A4	11	030010
6736-41-5110	A241P-01A0	10	030390
6736-51-5142	A331P-01B2	13	030480
6736-51-5142	B9999-01R0	3	030970
6736-51-5142	B9999-01T5	3	030990
6736-51-8130	A153T-01C6	8	030140
6736-51-8140	A153T-01C6	9	030140
6736-51-8710	A153T-01C6	12	030140
6736-51-8730	A153T-01C6	11	030140
6736-61-1520	A5019-01A0	2	030720
6736-61-1520	A501P-01A3	2	030690
6736-61-1520	A8126-02A1	2	030930
6736-61-4150	A601S-01F3	3	030800
6736-61-5180	A331P-01B2	3	030480
6736-71-5811	A417P-01B4	2	030640
6736-81-6170	A408P-01B0	7	030590
6736-81-6170	A408P-01B1	7	030600
6737-61-6270	A173P-01B1	8	030190
6737-81-8241	A1570-01E7	17	030170
6738-11-3120	A4219-01B1	2	030650
6738-11-4320	A153V-01A0	1	030150
6738-11-4370	A1539-01b8	6	030160
6738-11-4370	A153V-01A0	3	030150
6738-11-4370	A8126-01A1	1	030920
6738-11-4380	A153V-01A0	4	030150
6738-11-4390	A153V-01A0	5	030150
6738-11-4430	A131P-01A8	1	030070
6738-11-4440	A1410-01D3	24	030100
6738-11-5351	A1610-01H6	21	030180
6738-11-5360	A1610-01H6	16	030180
6738-11-5371	A1610-01H6	23	030180
6738-11-5411	A1610-01H6	17	030180
6738-11-5440	A1610-01H6	12	030180
6738-11-5542	A1610-01H6	1	030180
6738-11-5561	A1410-01D3	15	030100
6738-11-5571	A1410-01D3	17	030100
6738-11-5611	A1610-01H6	4	030180
6738-11-5680	A5210-01B5	5	030770
6738-11-5710	A1610-01H6	5	030180
6738-11-5720	A1410-01D3	20	030100
6738-11-5730	A1610-01H6	7	030180
6738-11-9111	A1410-01D3	11	030100
6738-11-9121	A1410-01D3	13	030100
6738-21-3110	A2049-01A1	1	030240
6738-21-5120	A207S-01A0	5	030270
6738-21-5130	A207S-01A0	4	030270
6738-21-5610	A2119-01B7	7	030320
6738-21-5620	A2119-01B7	7	030320
6738-21-5630	A2119-01B7	8	030320
6738-21-5640	A2119-01B7	9	030320
6738-21-6100	A206P-01A7	4	030250
6738-21-6110	A206P-01A7	4	030250
6738-21-6180	A206P-01A7	15	030250
6738-21-6180	A8126-02A1	2	030930
6738-21-6280	A206P-01A7	3	030250
6738-21-6620	A206P-01A7	10	030250
6738-21-6650	A206P-01A7	11	030250
6738-21-6650	A8126-02A1	2	030930
6738-21-6660	A206P-01A7	12	030250
6738-21-6660	A8126-02A1	2	030930
6738-21-6670	A206P-01A7	13	030250
6738-21-6680	A206P-01A7	16	030250
6738-21-7710	A206P-01A7	5	030250
6738-21-7780	A206P-01A7	6	030250

PARTS Nº	FIG. Nº	INDEX	PAGE
6738-21-7810	A206P-01A7	9	030250
6738-31-2031	A2359-01A2	4	030380
6738-31-2111	A2359-01A2	1	030380
6738-31-2311	A2359-01A2	4	030380
6738-31-2320	A2359-01A2	5	030380
6738-31-4301	A223P-01C0	1	030350
6738-38-2031	A8110-04A9	2	030910
6738-38-2111	A8110-04A9	6	030910
6738-38-2311	A8110-04A9	2	030910
6738-38-2320	A8110-04A9	3	030910
6738-39-2031	A8110-04A9	2	030910
6738-39-2111	A8110-04A9	5	030910
6738-39-2311	A8110-04A9	2	030910
6738-39-2320	A8110-04A9	3	030910
6738-51-5120	A331P-01B2	4	030480
6738-61-3911	A601S-01F3	5	030800
6738-61-8100	A5210-01B5	1	030770
6738-71-1170	A401P-01H8	1	030500
6738-71-1170	A401P-02H8	1	030510
6738-71-1170	A401P-03H8	1	030520
6738-71-1170	A401P-04H8	1	030530
6738-71-1170	A401P-05H8	1	030540
6738-71-1170	A401P-06H8	1	030550
6738-71-1170	A401P-07H8	1	030560
6738-71-3100	A408P-01B0	8	030590
6738-71-3100	A408P-01B1	8	030600
6738-71-3110	A408P-01B1	8	030600
6738-71-3120	A408P-01B0	6	030590
6738-71-3120	A408P-01B1	6	030600
6738-71-3610	A408P-01B0	3	030590
6738-71-3610	A408P-01B1	3	030600
6738-71-3620	A408P-01B0	1	030590
6738-71-3620	A408P-01B1	1	030600
6738-71-3810	A408P-01B1	8	030600
6738-71-5110	A411S-01C0	4	030630
6738-71-5120	A411S-01C0	5	030630
6738-71-5130	A411S-01C0	6	030630
6738-71-5450	A401R-01B2	2	030570
6738-71-5520	A411S-01C0	1	030630
6738-71-5530	A411S-01C0	28	030630
6738-71-5530	A4230-01A8	1	030670
6738-71-9110	B9999-01R1	1	030980
6738-71-9110	D0100-02A0	1	090020
6738-81-2511	A9810-01G0	1	030940
6738-81-3170	A201V-01A2Z	2	030210
6738-81-6110	A6010-01B1	1	030830
6738-81-6120	A601V-01A0	1	030820
6738-81-6130	A6010-01B1	2	030830
6738-81-7400	A1410-01D3	1	030100
6738-81-7410	A1410-01D3	1	030100
6738-81-8031	A1539-01b8	3	030160
6738-81-8121	A1539-01b8	3	030160
6738-81-8461	A1570-01E7	19	030170
6738-81-8470	A1570-01E7	1	030170
6738-81-8540	A1570-01E7	18	030170
6738-K1-1200	A8126-01A1	1	030920
6738-K2-1200	A8126-02A1	2	030930
6754-81-6110	A601T-01B1	1	030810
700-22-11370	Y1663-01A0	8	420320
700-22-11410	Y1663-01A0	27	420320
700-42-31460	Y1663-01A0	10	420320
700-80-51190	Y1663-02A0	3	420330
700-80-64220	Y1663-01A0	26	420320
700-83-11212	Y1663-01A0	6	420320
700-83-11510	Y1663-01A0	7	420320
700-84-11240	Y1663-01A0	18	420320
700-84-11320	Y1663-01A0	12	420320
700-84-12510	Y1663-01A0	20	420320
700-84-13781	Y1663-01A0	17	420320
700-84-13960	Y1663-01A0	25	420320
700-85-11310	Y1663-01A0	16	420320
700-85-11320	Y1663-01A0	22	420320
700-85-11350	Y1663-01A0	33	420320
700-85-11360	Y1663-01A0	34	420320
700-85-11370	Y1663-01A0	35	420320
700-85-11390	Y1663-01A0	37	420320
700-85-11410	Y1663-01A0	38	420320
700-85-11420	Y1663-01A0	39	420320
700-85-11430	Y1663-01A0	23	420320
700-85-11440	Y1663-01A0	24	420320
700-85-11450	Y1663-01A0	36	420320
700-85-61000	Y1663-02A0	7	420330
700-89-64001	Y1663-02A0	1	420330
700-90-51320	Y1663-01A0	11	420320
702-16-03370	K0210-10A4	11	240160
702-16-03370	Y1670-01A2	1	420350
702-16-03661	K0210-10A0	1	240150
702-16-03661	K0210-10A4	1	240160
702-16-03661	Y1670-01A0	1	420340
702-16-51240	Y1670-01A0	4	420340
702-16-53170	Y1670-01A2	7	420350
702-16-53230	Y1670-01A0	5	420340
702-16-54580	Y1670-01A2	9	420350
702-16-54590	Y1670-01A2	10	420350
702-16-54641	Y1670-01A2	14	420350
702-16-54650	Y1670-01A2	17	420350
702-16-54660	Y1670-01A2	16	420350
702-16-54880	Y1670-01A2	18	420350
702-16-57430	Y1670-01A2	8	420350
702-16-58820	Y1670-01A0	2	420340
704-17-02830	Y1610-31A0	14	420150
705-17-02221	Y1610-32A0	3	420160
705-17-02330	Y1610-32A0	13	420160
705-17-02353	Y1610-31A0	1	420150
705-17-02353	Y1610-31A0	3	420150
705-17-02353	Y1610-32A0	1	420160
705-17-02353	Y1610-32A0	3	420160
705-17-02360	Y1610-31A0	5	420150
705-17-02360	Y1610-32A0	5	420160
705-17-02420	Y1610-32A0	14	420160
705-17-02420	Y1610-33A0	14	420170
705-17-02430	Y1610-31A0	9	420150
705-17-02430	Y1610-32A0	9	420160
705-17-02460	Y1610-31A0	10	420150
705-17-02460	Y1610-32A0	10	420160
705-17-02521	Y1610-32A0	1	420160
705-17-02612	Y1610-31A0	8	420150
705-17-02612	Y1610-32A0	8	420160
705-17-02870	Y1610-31A0	13	420150
705-17-04980	Y1610-31A0	12	420150
705-17-30012	Y1610-32A0	2	420160
705-17-30512	Y1610-32A0	7	420160
705-17-34110	Y1610-31A0	2	420150
705-17-34511	Y1610-31A0	7	420150
705-17-34730	Y1610-31A0	6	420150
705-18-02240	Y1610-31A0	3	420150
705-18-02820	Y1610-31A0	1	420150
705-19-30760	Y1610-32A0	6	420160
705-22-30090	Y1610-32A0	1	420160
705-22-34150	Y1610-31A0	1	420150
705-40-22011	Y1610-33A0	2	420170
705-40-22511	Y1610-33A0	5	420170
705-40-22540	Y1610-33A0	4	420170
705-40-24E70	Y1610-34A0	2	420180
705-40-24H10	Y1610-34A0	4	420180
705-40-24L50	Y1610-34A0	3	420180
705-40-80311	Y1610-33A0	3	420170
705-40-80610	Y1610-33A0	1	420170
705-40-80610	Y1610-33A0	3	420170
705-40-80620	Y1610-33A0	1	420170
705-40-80620	Y1610-33A0	3	420170
705-40-80670	Y1610-34A0	16	420180
705-40-80770	Y1610-33A0	7	420170
705-40-80770	Y1610-34A0	6	420180
705-40-80880	Y1610-34A0	7	420180
705-40-80941	Y1610-33A0	17	420170
705-40-81820	Y1610-34A0	9	420180
705-40-81870	Y1610-34A0	10	420180
705-40-83630	Y1610-34A0	1	420180
705-40-83630	Y1610-34A0	2	420180

PARTS Nº	FIG. Nº	INDEX	PAGE
705-40-83640	Y1610-34A0	1	420180
705-40-83640	Y1610-34A0	2	420180
705-40-83720	Y1610-33A0	6	420170
705-40-83720	Y1610-34A0	5	420180
705-40-83760	Y1610-34A0	8	420180
705-41-04400	Y1610-33A0	1	420170
705-41-05690	Y1610-34A0	1	420180
705-41-83010	Y1610-33A0	1	420170
705-41-83510	Y1610-34A0	1	420180
705-56-26080	H0210-01A0	1	180060
705-56-26080	Y1610-31A0	1	420150
705-56-26080	Y1610-32A0	1	420160
705-56-26080	Y1610-33A0	1	420170
705-56-26080	Y1610-34A0	1	420180
705-56-26081	H0210-01A0	1	180060
705-67-01230	Y1610-33A0	10	420170
705-67-01330	Y1610-33A0	13	420170
705-67-01330	Y1610-34A0	15	420180
707-00-07H80	J4140-01A0	1	210060
707-00-07H80	Y1622-01A0	1	420210
707-00-0C190	Y1622-01A0	1	420210
707-00-0E720	Y1620-01A0	1	420190
707-00-0E730	Y1620-01A0	1	420190
707-00-0E740	Y1620-11A0	1	420200
707-00-XE720	Y1620-01A0	1	420190
707-00-XE730	Y1620-01A0	1	420190
707-00-XZ730	T4140-01A0	1	330080
707-00-XZ730	Y1620-01A0	1	420190
707-00-XZ731	T4140-01A0	1	330080
707-00-XZ740	T4140-01A0	2	330080
707-00-XZ740	Y1620-01A0	1	420190
707-00-XZ741	T4140-01A0	2	330080
707-00-XZ750	T4150-01A0	1	330090
707-00-XZ750	Y1620-11A0	1	420200
707-11-13540	Y1620-11A0	1	420200
707-11-70100	Y1622-01A0	1	420210
707-29-12380	Y1620-01A0	4	420190
707-29-13240	Y1620-11A0	4	420200
707-29-70730	Y1622-01A0	6	420210
707-36-12130	Y1620-01A0	13	420190
707-36-13130	Y1620-11A0	16	420200
707-36-70270	Y1622-01A0	17	420210
707-44-12180	Y1620-01A0	14	420190
707-44-13180	Y1620-11A0	17	420200
707-44-70110	Y1622-01A0	18	420210
707-51-40030	Y1622-01A0	8	420210
707-51-65030	Y1620-01A0	6	420190
707-51-65030	Y1620-11A0	6	420200
707-52-10660	Y1620-01A0	5	420190
707-52-10660	Y1620-11A0	5	420200
707-58-40A60	Y1622-01A0	14	420210
707-59-65070	Y1620-01A0	12	420190
707-67-30030	Y1622-01A0	20	420210
707-67-45010	Y1620-01A0	16	420190
707-67-48010	Y1620-11A0	19	420200
707-76-40020	Y1622-01A0	15	420210
707-76-40020	Y1622-01A0	2	420210
707-76-65580	Y1620-01A0	2	420190
707-76-70720	Y1620-11A0	2	420200
707-86-47620	Y1620-01A0	18	420190
707-86-47630	Y1620-01A0	19	420190
707-86-47640	Y1620-01A0	19	420190
707-86-47650	Y1620-01A0	18	420190
707-86-66960	Y1620-11A0	23	420200
707-88-86550	Y1620-01A0	21	420190
707-98-42150	Y1620-01A0	KIT	420190
707-98-42540	Y1620-11A0	K	420200
707-99-14760	Y1622-01A0	K	420210
709-30-62150	Y1663-01A0	31	420320
709-70-79300	Y1663-02A0	5	420330
709-82-00260	Y1663-01A0	1	420320
709-82-12400	H0120-01A2	1	180020
709-82-12400	H0120-01A4	1	180030
709-82-12400	Y1663-01A0	1	420320
709-82-12400	Y1663-02A0	1	420330
709-83-00170	Y1663-01A0	1	420320
709-83-10720	Y1663-01A0	1	420320
709-83-12400	H0120-01A2	1	180020
709-83-12400	Y1663-01A0	1	420320
709-83-12400	Y1663-02A0	1	420330
714-09-16282	F2420-54A0	31	150060
714-09-16282	F2420-54A0A	31	150061
714-11-18340	F2420-54A0	21	150060
714-11-18340	F2420-54A0A	21	150061
714-11-19810	F2420-54A0	28	150060
714-11-19810	F2420-54A0A	28	150061
714-12-12610	F2420-52A0	4	150040
714-16-19730	F2420-52A0	2	150040
721-11-12820	Y1620-01A0	1	420190
721-11-12830	Y1620-01A0	1	420190
7826-20-7031	E0201-01A0	6	120051
7826-20-7032	E0201-01A0	6	120051
7826-20-7033	E0201-01A0	6	120051
7826-20-9310	E0201-01A0	14	120051
7826-20-9311	E0201-01A0	14	120051
7861-92-3320	K4220-01A0	1	240760
7861-92-3380	A1010-01B5	1	030020
7861-92-3380	A1010-01D0	1	030030
7861-93-2330	B0110-02A0	21	030040
7861-93-3520	A5090-01A2	2	030760
799-101-5220	F2430-01A0	17	150070
799-101-5220	K4460-02A0	19	240800
799-101-5220	T4150-01A0	9	330090
815-02-10110	F4400-51A0	18	150130
815-02-10110	F4500-51A0	18	150190
8255-62-4370	K0210-11A0	6	240170
8255-62-4370	K0210-11A4	5	240180
8A13-10-1310	E0201-01A0	2	120051
8A13-10-1410	E0201-01A0	15	120051
8A13-10-2100	E0201-01A0	1	120051
8A13-10-2310	E0201-01A0	2	120051
C4704468625	Y1651-01A0	9	420220
DK010038-1840	A401P-04H8	48	030530
DK010235-1640	A401P-04H8	15	030530
DK013030-6040	A401P-05H8	12	030540
DK014010-8140	A401P-04H8	52	030530
DK014110-6440	A401P-05H8	15	030540
DK014110-6440	A401P-05H8	19	030540
DK014110-8440	A401P-04H8	51	030530
DK016010-0540	A401P-04H8	37	030530
DK016010-0740	A401P-04H8	3	030530
DK016010-1640	A401P-06H8	23	030550
DK016520-2210	A401P-04H8	11	030530
DK016630-2030	A401P-02H8	12	030510
DK016640-2030	A401P-02H8	13	030510
DK020006-1640	A401P-06H8	11	030550
DK020006-1640	A401P-06H8	12	030550
DK020006-1640	A401P-06H8	13	030550
DK020006-1640	A401P-06H8	14	030550
DK020006-1840	A401P-06H8	34	030550
DK020106-1640	A401P-05H8	17	030540
DK020106-1840	A401P-04H8	23	030530
DK020106-3840	A401P-06H8	9	030550
DK025803-1310	A401P-06H8	28	030550
DK026505-0940	A401P-02H8	20	030510
DK026506-1040	A401P-05H8	11	030540
DK026508-1140	A401P-06H8	39	030550
DK026512-1540	A401P-06H8	18	030550
DK026518-2240	A401P-04H8	27	030530
DK026518-2240	A401P-04H8	45	030530
DK028201-7020	A401P-02H8	12	030510
DK028202-0020	A401P-02H8	13	030510
DK029010-6810	A401P-02H8	23	030510
DK029010-6810	A401P-04H8	22	030530
DK029040-6020	A401P-02H8	2	030510
DK029050-5010	A401P-02H8	19	030510
DK029111-2090	A401P-05H8	7	030540
DK029201-6010	A401P-04H8	35	030530
DK029231-2030	A401P-04H8	30	030530
DK029311-0010	A401P-04H8	32	030530

PARTS N°	FIG. N°	INDEX	PAGE
DK029311-0020	A401P-03H8	15	030520
DK029311-0030	A401P-03H8	15	030520
DK029311-0040	A401P-03H8	15	030520
DK029311-0050	A401P-03H8	15	030520
DK029311-0060	A401P-03H8	15	030520
DK029311-0070	A401P-03H8	15	030520
DK029311-0080	A401P-03H8	15	030520
DK029311-0090	A401P-03H8	15	030520
DK029311-0110	A401P-03H8	15	030520
DK029311-0120	A401P-03H8	15	030520
DK029311-0130	A401P-03H8	15	030520
DK029311-0140	A401P-03H8	15	030520
DK029311-0180	A401P-04H8	32	030530
DK029311-0190	A401P-04H8	32	030530
DK029311-0210	A401P-04H8	32	030530
DK029311-0220	A401P-06H8	36	030550
DK029311-0230	A401P-06H8	36	030550
DK029311-0270	A401P-03H8	15	030520
DK029311-0280	A401P-03H8	15	030520
DK029311-0290	A401P-03H8	15	030520
DK029311-0310	A401P-03H8	15	030520
DK029311-0320	A401P-03H8	15	030520
DK029311-0330	A401P-03H8	15	030520
DK029311-0340	A401P-03H8	15	030520
DK029311-0350	A401P-03H8	15	030520
DK029311-0490	A401P-03H8	15	030520
DK029311-0500	A401P-03H8	15	030520
DK029311-0580	A401P-03H8	15	030520
DK029311-0590	A401P-03H8	15	030520
DK029311-0600	A401P-03H8	15	030520
DK029311-0610	A401P-03H8	15	030520
DK029311-0620	A401P-03H8	15	030520
DK029311-0630	A401P-03H8	15	030520
DK029311-0710	A401P-03H8	15	030520
DK029311-1070	A401P-06H8	26	030550
DK029311-7010	A401P-02H8	17	030510
DK029311-7020	A401P-02H8	17	030510
DK029311-7030	A401P-02H8	17	030510
DK029311-7040	A401P-02H8	17	030510
DK029311-7050	A401P-02H8	17	030510
DK029311-7060	A401P-02H8	17	030510
DK029311-7070	A401P-02H8	17	030510
DK029311-7090	A401P-02H8	17	030510
DK029311-7210	A401P-02H8	17	030510
DK029311-7220	A401P-02H8	17	030510
DK029312-0310	A401P-02H8	16	030510
DK029312-0320	A401P-02H8	16	030510
DK029312-0330	A401P-02H8	16	030510
DK029312-0340	A401P-02H8	16	030510
DK029312-0350	A401P-02H8	16	030510

PARTS N°	FIG. N°	INDEX	PAGE
DK029312-0360	A401P-02H8	16	030510
DK029312-0370	A401P-02H8	16	030510
DK029312-0380	A401P-02H8	16	030510
DK029321-2020	A401P-04H8	29	030530
DK029331-2130	A401P-05H8	6	030540
DK029332-6030	A401P-07H8	5	030560
DK029340-6020	A401P-02H8	8	030510
DK029341-0110	A401P-02H8	30	030510
DK029341-0110	A401P-04H8	16	030530
DK029341-0110	A401P-05H8	20	030540
DK029341-4130	A401P-02H8	27	030510
DK029341-4130	A401P-07H8	18	030560
DK029341-4130	A401P-07H8	19	030560
DK029622-0190	A401P-02H8	21	030510
DK029631-0030	A401P-06H8	35	030550
DK029631-6060	A401P-07H8	13	030560
DK029631-8020	A401P-06H8	22	030550
DK029633-1010	A401P-02H8	10	030510
DK029635-2020	A401P-06H8	38	030550
DK029637-5030	A401P-02H8	28	030510
DK029731-0120	A401P-02H8	29	030510
DK029731-0120	A401P-04H8	17	030530
DK029731-0120	A401P-05H8	21	030540
DK029731-4680	A401P-07H8	17	030560
DK101062-9340	A401P-02H8	1	030510
DK101062-9340	A401P-03H8	1	030520
DK105220-5960	A401P-07H8	1	030560
DK105404-5980	A401P-04H8	1	030530
DK105404-5980	A401P-05H8	1	030540
DK105404-5980	A401P-06H8	1	030550
DK131002-2000	A401P-02H8	4	030510
DK131011-0800	A401P-02H8	6	030510
DK131017-1000	A401P-02H8	7	030510
DK131028-6020	A401P-02H8	5	030510
DK131034-1401	A401P-03H8	1	030520
DK131073-9120	A401P-02H8	1	030510
DK131110-7720	A401P-03H8	3	030520
DK131112-5600	A401P-03H8	4	030520
DK131115-1600	A401P-03H8	5	030520
DK131116-8420	A401P-03H8	6	030520
DK131117-3100	A401P-03H8	7	030520
DK131122-0520	A401P-03H8	8	030520
DK131154-6520	A401P-03H8	2	030520
DK131200-2820	A401P-03H8	10	030520
DK131203-0800	A401P-03H8	11	030520
DK131204-1000	A401P-03H8	12	030520
DK131205-0500	A401P-03H8	13	030520
DK131206-0200	A401P-03H8	14	030520
DK131215-2500	A401P-03H8	16	030520
DK131216-0100	A401P-03H8	17	030520

PARTS N°	FIG. N°	INDEX	PAGE
DK131217-0200	A401P-03H8	18	030520
DK131226-0300	A401P-03H8	20	030520
DK131240-0100	A401P-03H8	21	030520
DK131241-0100	A401P-03H8	22	030520
DK131242-0100	A401P-03H8	23	030520
DK131256-0900	A401P-03H8	19	030520
DK131302-1300	A401P-02H8	14	030510
DK131302-1700	A401P-02H8	15	030510
DK131306-1000	A401P-02H8	18	030510
DK131321-1900	A401P-02H8	24	030510
DK131330-6400	A401P-02H8	22	030510
DK131371-4900	A401P-02H8	11	030510
DK131401-0020	A401P-02H8	26	030510
DK131424-3420	A401P-02H8	25	030510
DK134026-0000	A401P-02H8	3	030510
DK139006-7100	A401P-06H8	7	030550
DK139206-0400	A401P-02H8	9	030510
DK139208-0400	A401P-06H8	5	030550
DK139406-1400	A401P-04H8	8	030530
DK139410-0000	A401P-04H8	32	030530
DK139410-0100	A401P-04H8	32	030530
DK139410-3000	A401P-04H8	32	030530
DK139410-3100	A401P-04H8	32	030530
DK139410-3200	A401P-04H8	32	030530
DK139411-0000	A401P-06H8	25	030550
DK139417-0000	A401P-02H8	17	030510
DK139611-0000	A401P-06H8	24	030550
DK139717-0100	A401P-03H8	9	030520
DK146711-0000	A401P-05H8	4	030540
DK152003-1020	A401P-07H8	1	030560
DK152100-1120	A401P-07H8	2	030560
DK152102-1600	A401P-07H8	3	030560
DK152105-1600	A401P-07H8	4	030560
DK152111-2820	A401P-07H8	6	030560
DK152112-0100	A401P-07H8	7	030560
DK152113-0700	A401P-07H8	8	030560
DK152114-0400	A401P-07H8	9	030560
DK152115-0500	A401P-07H8	10	030560
DK152116-0200	A401P-07H8	11	030560
DK152118-0900	A401P-07H8	12	030560
DK152121-0200	A401P-07H8	14	030560
DK152200-5420	A401P-07H8	15	030560
DK152300-5920	A401P-07H8	16	030560
DK152320-0100	A401P-07H8	20	030560
DK154010-0200	A401P-06H8	8	030550
DK154011-0100	A401P-06H8	1	030550
DK154011-1700	A401P-06H8	17	030550
DK154011-4900	A401P-04H8	25	030530
DK154013-6000	A401P-04H8	24	030530
DK154031-4700	A401P-06H8	4	030550

PARTS N°	FIG. N°	INDEX	PAGE
DK154035-1600	A401P-05H8	13	030540
DK154035-2900	A401P-06H8	41	030550
DK154036-0300	A401P-06H8	6	030550
DK154062-2720	A401P-05H8	23	030540
DK154062-2900	A401P-05H8	14	030540
DK154062-3520	A401P-04H8	54	030530
DK154062-3900	A401P-06H8	42	030550
DK154062-4020	A401P-06H8	43	030550
DK154062-5001	A401P-05H8	18	030540
DK154063-8400	A401P-06H8	10	030550
DK154123-2320	A401P-04H8	31	030530
DK154150-0400	A401P-06H8	15	030550
DK154154-5200	A401P-04H8	33	030530
DK154158-1220	A401P-06H8	16	030550
DK154159-1200	A401P-06H8	19	030550
DK154177-0620	A401P-04H8	34	030530
DK154200-7020	A401P-06H8	20	030550
DK154204-4300	A401P-06H8	21	030550
DK154204-4400	A401P-06H8	27	030550
DK154206-0200	A401P-06H8	30	030550
DK154206-2800	A401P-06H8	29	030550
DK154218-1620	A401P-04H8	36	030530
DK154222-5800	A401P-04H8	40	030530
DK154232-3200	A401P-04H8	39	030530
DK154235-4720	A401P-04H8	38	030530
DK154236-4100	A401P-04H8	42	030530
DK154237-1100	A401P-06H8	31	030550
DK154321-0400	A401P-06H8	3	030550
DK154322-0600	A401P-06H8	40	030550
DK154326-5120	A401P-04H8	55	030530
DK154375-9020	A401P-04H8	21	030530
DK154382-3720	A401P-06H8	33	030550
DK154390-0000	A401P-04H8	43	030530
DK154390-0300	A401P-06H8	37	030550
DK154396-8020	A401P-06H8	32	030550
DK154400-9520	A401P-05H8	2	030540
DK154404-5600	A401P-05H8	9	030540
DK154411-7300	A401P-05H8	22	030540
DK154413-2600	A401P-05H8	8	030540
DK154415-1200	A401P-05H8	3	030540
DK154415-1300	A401P-05H8	5	030540
DK154415-1800	A401P-05H8	10	030540
DK154415-3320	A401P-04H8	4	030530
DK154415-3400	A401P-04H8	5	030530
DK154422-7101	A401P-05H8	1	030540
DK154422-7820	A401P-05H8	1	030540
DK154500-8020	A401P-06H8	2	030550
DK154620-0020	A401P-04H8	1	030530
DK154620-0820	A401P-04H8	1	030530
DK154620-1500	A401P-04H8	49	030530

PARTS N°	FIG. N°	INDEX	PAGE
DK154620-1600	A401P-04H8	14	030530
DK154620-3200	A401P-05H8	16	030540
DK154620-4700	A401P-04H8	50	030530
DK154620-7900	A401P-04H8	20	030530
DK154620-8800	A401P-04H8	46	030530
DK154620-8901	A401P-04H8	47	030530
DK154621-2120	A401P-04H8	28	030530
DK154621-3000	A401P-04H8	44	030530
DK154621-3200	A401P-04H8	53	030530
DK154621-3500	A401P-04H8	12	030530
DK154621-3600	A401P-04H8	10	030530
DK154621-3701	A401P-04H8	2	030530
DK154621-3800	A401P-04H8	6	030530
DK154621-3900	A401P-04H8	13	030530
DK154621-4100	A401P-04H8	19	030530
DK154621-4300	A401P-04H8	18	030530
DK154621-4400	A401P-04H8	7	030530
DK155402-3800	A401P-04H8	41	030530
DK155404-5120	A401P-04H8	26	030530
DK160100-0540	A401P-04H8	9	030530
GSERVICEKIT	Y1620-01A0		420190
GSERVICEKIT	Y1620-11A0		420200
GSERVICEKIT	Y1622-01A0		420210
ND021041-8620	A601P-02B1	22	030790
ND021045-0530	A601P-02B1	4	030790
ND021100-4210	A601P-02B1	1	030790
ND021200-8380	A601P-02B1	19	030790
ND021401-4980	A601P-02B1	2	030790
ND021411-0570	A601P-02B1	3	030790
ND021501-8050	A601P-02B1	8	030790
ND021506-0070	A601P-02B1	21	030790
ND021542-0160	A601P-02B1	26	030790
ND021551-2480	A601P-02B1	12	030790
ND021580-4820	A601P-02B1	9	030790
ND021602-5230	A601P-02B1	29	030790
ND021605-1970	A601P-02B1	13	030790
ND021605-2481	A601P-02B1	14	030790
ND021620-2720	A601P-02B1	10	030790
ND021626-0190	A601P-02B1	24	030790
ND021626-0250	A601P-02B1	25	030790
ND028062-0130	A621P-02A4	2	030850
ND028062-5790	A621P-02A4	40	030850
ND028063-0030	A621P-02A4	29	030850
ND028065-0250	A621P-02A4	21	030850
ND028099-3160	A621P-02A4	16	030850
ND028099-3270	A621P-02A4	7	030850
ND028099-3570	A621P-02A4	3	030850
ND028099-5620	A621P-02A4	15	030850
ND028100-2882	A621P-02A4	1	030850
ND028200-1590	A621P-02A4	4	030850

PARTS N°	FIG. N°	INDEX	PAGE
ND028300-6551	A621P-02A4	7	030850
ND028300-6751	A621P-02A4	8	030850
ND028306-0070	A621P-02A4	28	030850
ND028327-0171	A621P-02A4	30	030850
ND028371-1500	A621P-02A4	27	030850
ND028381-0071	A621P-02A4	12	030850
ND028501-8091	A621P-02A4	24	030850
ND028510-5390	A621P-02A4	22	030850
ND028901-5190	A621P-02A4	42	030850
ND053404-0240	A621P-02A4	18	030850
ND053480-7560	A621P-02A4	20	030850
ND053505-0290	A621P-02A4	19	030850
ND053660-7170	A621P-02A4	17	030850
ND121400-0800	A601P-02B1	1	030790
ND126000-2320	A601P-02B1	11	030790
ND128950-0520	A621P-02A4	31	030850
ND128961-0010	A621P-02A4	25	030850
ND153400-8530	A621P-02A4	14	030850
ND228401-0633	A621P-02A4	13	030850
ND263500-0763	K0710-01A0	2	240680
ND90170-10061	A621P-02A4	35	030850
ND90200-06241	A621P-02A4	39	030850
ND90258-10001	A621P-02A4	37	030850
ND90801-10050	A621P-02A4	33	030850
ND91310-04251	A601P-02B1	16	030790
ND92150-06061	A601P-02B1	30	030790
ND949006-4720	A621P-02A4	38	030850
ND949006-5460	A601P-02B1	15	030790
ND949006-5590	A601P-02B1	5	030790
ND949006-6401	A601P-02B1	27	030790
ND949007-5110	A601P-02B1	16	030790
ND949007-6280	A601P-02B1	28	030790
ND949007-6530	A621P-02A4	34	030850
ND949007-6850	A621P-02A4	41	030850
ND949020-0600	A621P-02A4	32	030850
ND949043-2000	A601P-02B1	7	030790
ND949056-2481	A601P-02B1	17	030790
ND949056-2520	A601P-02B1	23	030790
ND949056-3080	A601P-02B1	18	030790
ND949056-4480	A621P-02A4	36	030850
ND949100-1750	A621P-02A4	6	030850
ND949100-1920	A621P-02A4	10	030850
ND949100-1930	A621P-02A4	5	030850
ND949100-2790	A601P-02B1	20	030790
ND949100-4500	A621P-02A4	9	030850
ND949100-5010	A601P-02B1	6	030790
ND949170-4040	A621P-02A4	11	030850
ND949170-4070	A621P-02A4	26	030850
ND949173-0571	A621P-02A4	23	030850
TR1192-8673411	C0110-02A0	3	060020

PARTS Nº	FIG. Nº	INDEX	PAGE
TR1192-8673420	C0110-02A0	4	060020
UC1020069563	Y1651-05A1	3	420290
UC1020155343	Y1610-04A0	1	420040
UC1020273294	Y1651-03A0	5	420250
UC1020273304	Y1651-03A0	5	420250
UC1020273313	Y1651-03A0	5	420250
UC1020273322	Y1651-03A0	5	420250
UC1020273331	Y1651-03A0	5	420250
UC1020347322	Y1610-13A0	3	420130
UC1020389371	Y1651-05A0	1	420280
UC1020450648	Y1651-05A1	10	420290
UC1020451292	Y1651-05A1	8	420290
UC1020481826	Y1610-13A0	1	420130
UC1020481871	Y1610-13A0	2	420130
UC1020665932	Y1610-02A0	10	420020
UC1020675205	Y1651-01A0	3	420220
UC1020675205	Y1651-01A1	3	420230
UC1020753442	Y1651-04A0	8	420260
UC1020753442	Y1651-04A1	8	420270
UC1020772296	Y1651-05A1	1	420290
UC1020777952	Y1610-10A0	1	420100
UC1026007057	Y1610-13A0	7	420130
UC1026011625	Y1610-12A0	2	420120
UC1026017421	Y1651-05A0	18	420280
UC1026018204	Y1610-02A0	17	420020
UC1026023224	Y1651-04A0	15	420260
UC1026023224	Y1651-04A1	15	420270
UC1026024474	Y1610-09A0	3	420090
UC1090830219	Y1610-13A0	6	420130
UC1090830283	Y1610-13A0	5	420130
UC1090830917	Y1610-10A0	7	420100
UC1094326623	Y1651-05A1	2	420290
UC1096501963	Y1651-05A1	9	420290
UC1099215509	Y1610-02A0	6	420020
UC1100590857	Y1651-03A0	5	420250
UC1100590866	Y1651-03A0	5	420250
UC1100656159	Y1610-05A0	4	420050
UC1100679859	Y1610-01A0	7	420010
UC1100695026	Y1610-01A0	20	420010
UC1181066129	Y1610-01A0	18	420010
UC1300020004	Y1651-04A0	12	420260
UC1300020004	Y1651-04A1	12	420270
UC1300022009	Y1610-08A0	12	420080
UC1300028008	Y1651-04A0	13	420260
UC1300028008	Y1651-04A1	13	420270
UC1300030001	Y1610-13A0	11	420130
UC1300032007	Y1651-04A0	14	420260
UC1300032007	Y1651-04A1	14	420270
UC1300034003	Y1610-13A0	10	420130
UC1300038005	Y1610-04A0	8	420040
UC1300038005	Y1610-05A0	9	420050
UC1300082002	Y1610-13A0	9	420130
UC1300083005	Y1651-05A0	10	420280
UC1300083005	Y1651-05A1	17	420290
UC1300142003	Y1610-08A0	10	420080
UC1300170008	Y1610-07A0	6	420070
UC1300172004	Y1610-06A0	1	420060
UC1300186003	Y1610-14A0	10	420140
UC1300188009	Y1610-06A0	3	420060
UC1300297002	Y1610-03A0	6	420030
UC1300313003	Y1610-10A0	9	420100
UC1300372002	Y1651-06A0	3	420300
UC1300449001	Y1610-10A0	8	420100
UC1300449001	Y1610-11A0	2	420110
UC1300521002	Y1651-01A0	8	420220
UC1300521002	Y1651-01A1	8	420230
UC1301169009	Y1610-01A0	11	420010
UC1301181009	Y1610-01A0	19	420010
UC1301205004	Y1610-01A0	10	420010
UC1301544006	Y1651-05A0	11	420280
UC1301544006	Y1651-05A1	11	420290
UC1301582008	Y1610-01A0	21	420010
UC1301586009	Y1610-03A0	5	420030
UC1301608009	Y1651-04A0	11	420260
UC1301608009	Y1651-04A1	11	420270
UC1301638009	Y1610-05A0	6	420050
UC1302086116	Y1651-05A0	14	420280
UC1302086116	Y1651-05A1	13	420290
UC1302133001	Y1610-02A0	15	420020
UC1302151009	Y1610-14A0	12	420140
UC1303012409	Y1651-06A0	2	420300
UC1303046816	Y1610-05A0	7	420050
UC1700628477	Y1651-03A0	7	420250
UC1700713621	Y1610-13A0	4	420130
UC1700832043	Y1651-04A0	16	420260
UC1700832043	Y1651-04A1	16	420270
UC1700833651	Y1651-02A0	5	420240
UC1700833817	Y1651-05A0	13	420280
UC1700833817	Y1651-05A1	12	420290
UC1700834122	Y1651-01A0	5	420220
UC1700834122	Y1651-01A1	5	420230
UC1700845562	Y1610-02A0	18	420020
UC1700871882	Y1651-01A0	7	420220
UC1700871882	Y1651-01A1	7	420230
UC1700874056	Y1610-01A0	16	420010
UC1700877569	Y1651-05A0	15	420280
UC1700877569	Y1651-05A1	14	420290
UC1700879134	Y1610-01A0	14	420010
UC1701516926	Y1610-05A0	11	420050
UC1701524257	Y1651-05A0	16	420280
UC1701524257	Y1651-05A1	15	420290
UC1701524596	Y1651-01A0	10	420220
UC1701524596	Y1651-01A1	10	420230
UC1701526006	Y1651-04A0	18	420260
UC1701526006	Y1651-04A1	18	420270
UC1701527072	Y1610-08A0	11	420080
UC1701527072	Y1610-14A0	11	420140
UC1701531044	Y1610-02A0	13	420020
UC1701532717	Y1610-07A0	7	420070
UC1701533646	Y1610-01A0	13	420010
UC1701538476	Y1610-14A0	13	420140
UC1701538687	Y1651-05A0	17	420280
UC1701538687	Y1651-05A1	16	420290
UC1701538797	Y1610-13A0	8	420130
UC1701538797	Y1651-04A0	19	420260
UC1701538797	Y1651-04A1	19	420270
UC1701538807	Y1610-05A0	14	420050
UC1701539213	Y1610-05A0	8	420050
UC1701539305	Y1651-05A0	12	420280
UC1701539305	Y1651-06A0	4	420300
UC1701542934	Y1651-02A0	7	420240
UC1701543827	Y1651-02A0	6	420240
UC1701544279	Y1610-01A0	12	420010
UC1701564769	Y1610-14A0	9	420140
UC1701566518	Y1651-04A0	20	420260
UC1701566518	Y1651-04A1	20	420270
UC1701569306	Y1610-10A0	6	420100
UC1701572879	Y1610-14A0	14	420140
UC1701574775	Y1610-03A0	4	420030
UC1704080282	Y1610-01A0	8	420010
UC1704086822	Y1610-14A0	6	420140
UC1704122469	Y1651-05A0	2	420280
UC1704123169	Y1651-05A0	6	420280
UC1704127565	Y1651-04A0	10	420260
UC1704127565	Y1651-04A1	10	420270
UC1704147211	Y1610-14A0	1	420140
UC1704179593	Y1610-02A0	7	420020
UC1704213271	Y1610-14A0	4	420140
UC1704229496	Y1651-04A0	5	420260
UC1704229496	Y1651-04A1	5	420270
UC1704266624	Y1651-04A0	9	420260
UC1704266624	Y1651-04A1	9	420270
UC1704267067	Y1610-01A0	17	420010
UC1704321629	Y1610-08A0	3	420080
UC1704321639	Y1610-08A0	4	420080
UC1704321648	Y1610-08A0	5	420080
UC1704321675	Y1610-08A0	9	420080
UC1704329835	Y1610-02A0	19	420020
UC1704329844	Y1610-02A0	19	420020
UC1704329853	Y1610-02A0	19	420020

PARTS Nº	FIG. Nº	INDEX	PAGE
UC1704329862	Y1610-02A0	19	420020
UC1704356497	Y1610-02A0	12	420020
UC1704357904	Y1610-05A0	13	420050
UC1704358998	Y1610-07A0	3	420070
UC1704361673	Y1610-07A0	1	420070
UC1704362685	Y1651-05A0	8	420280
UC1704362841	Y1610-08A0	6	420080
UC1704365538	Y1610-08A0	2	420080
UC1704365693	Y1610-08A0	1	420080
UC1704405379	Y1610-05A0	12	420050
UC1704407659	Y1610-07A0	5	420070
UC1704449699	Y1651-04A0	7	420260
UC1704449699	Y1651-04A1	7	420270
UC1704459899	Y1651-06A0	1	420300
UC1704491361	Y1610-05A0	5	420050
UC1704491361	Y1610-10A0	2	420100
UC1704492355	Y1651-03A0	8	420250
UC1704496229	Y1610-07A0	2	420070
UC1704497149	Y1610-01A0	9	420010
UC1704498106	Y1610-02A0	5	420020
UC1704498858	Y1610-02A0	11	420020
UC1706501543	Y1610-14A0	8	420140
UC1706505022	Y1651-02A0	2	420240
UC1706511164	Y1651-05A0	9	420280
UC1706511164	Y1651-05A1	7	420290
UC1706511182	Y1651-05A0	4	420280
UC1706511182	Y1651-05A1	4	420290
UC1706514979	Y1651-02A0	3	420240
UC1706515157	Y1651-02A0	3	420240
UC1706515166	Y1651-02A0	3	420240
UC1706515175	Y1651-02A0	3	420240
UC1706515184	Y1651-02A0	3	420240
UC1706522018	Y1651-04A0	6	420260
UC1706522018	Y1651-04A1	6	420270
UC1708301657	Y1610-02A0	14	420020
UC1708303121	Y1610-04A0	7	420040
UC1708311782	Y1651-01A0	6	420220
UC1708311782	Y1651-01A1	6	420230
UC1708321431	Y1651-04A0	17	420260
UC1708321431	Y1651-04A1	17	420270
UC1709213395	Y1651-05A1	5	420290
UC1709213515	Y1651-05A0	5	420280
UC1709214196	Y1651-05A1	6	420290
UC1709214215	Y1651-05A0	7	420280
UC1709214389	Y1651-04A0	4	420260
UC1709214389	Y1651-04A1	4	420270
UC1709214884	Y1651-02A0	4	420240
UC1709214893	Y1651-02A0	4	420240
UC1709214903	Y1651-02A0	4	420240
UC1709214912	Y1651-02A0	4	420240
UC1709214921	Y1651-02A0	4	420240
UC1709214939	Y1651-02A0	4	420240
UC1709214949	Y1651-02A0	4	420240
UC1709214958	Y1651-02A0	4	420240
UC1709215079	Y1651-03A0	6	420250
UC1709215089	Y1651-03A0	3	420250
UC1709215263	Y1651-03A0	5	420250
UC1709217287	Y1610-02A0	3	420020
UC1709217296	Y1610-02A0	8	420020
UC1709217306	Y1610-02A0	9	420020
UC1709217874	Y1651-03A0	2	420250
UC1709221093	Y1610-04A0	2	420040
UC1709221149	Y1610-04A0	5	420040
UC1709221158	Y1610-04A0	6	420040
UC1709221167	Y1610-04A0	9	420040
UC1709221525	Y1610-14A0	3	420140
UC1709222555	Y1610-02A0	4	420020
UC1720001272	Y1651-04A0	3	420260
UC1720001272	Y1651-04A1	3	420270
UC1720068844	Y1651-03A0	1	420250
UC1720094027	Y1610-08A0	7	420080
UC1720103369	Y1610-07A0	4	420070
UC1720106212	Y1610-03A0	2	420030
UC1720106221	Y1610-03A0	3	420030
UC1720131603	Y1610-10A0	3	420100
UC1720201005	Y1610-04A0	4	420040
UC1720204939	Y1610-04A0	10	420040
UC1720204949	Y1610-04A0	10	420040
UC1720204958	Y1610-04A0	10	420040
UC1720204967	Y1610-04A0	10	420040
UC1720204976	Y1610-04A0	10	420040
UC1720204985	Y1610-04A0	10	420040
UC1720207565	Y1610-04A0	10	420040
UC1720237554	Y1610-14A0	5	420140
UC1720256499	Y1610-10A0	5	420100
UC1720297574	Y1610-04A0	10	420040
UC1720356169	Y1610-01A0	15	420010
UC1720367765	Y1651-05A0	3	420280
UC1720370752	Y1610-14A0	2	420140
UC1720379108	Y1610-14A0	7	420140
UC1720430928	Y1610-08A0	8	420080
UC1720431499	Y1610-04A0	10	420040
UC1726000019	Y1610-02A0	16	420020
UC1726002703	Y1610-03A0	8	420030
UC1726007679	Y1610-04A0	3	420040
UC1726008389	Y1610-03A0	7	420030
UC1800141454	Y1610-06A0	2	420060
UC4020062587	Y1610-10A0	4	420100
UC4020162421	Y1610-01A0	2	420010
UC4020162421	Y1610-03A0	1	420030
UC4020255367	Y1610-03A0	1	420030
UC4020255367	Y1610-04A0	1	420040
UC4020481906	Y1610-12A0	1	420120
UC4020481906	Y1610-13A0	1	420130
UC4020482808	Y1610-01A0	5	420010
UC4020482808	Y1610-12A0	1	420120
UC4020542239	Y1651-01A0	2	420220
UC4020542239	Y1651-04A0	1	420260
UC4020572314	Y1651-04A0	1	420260
UC4020572314	Y1651-05A0	1	420280
UC4020753283	Y1651-04A1	1	420270
UC4020753283	Y1651-05A1	1	420290
UC4020753311	Y1651-01A1	2	420230
UC4020753311	Y1651-04A1	1	420270
UC4020757708	Y1651-05A1	18	420290
UC4020777371	Y1610-09A0	1	420090
UC4020777371	Y1610-10A0	1	420100
UC4020777894	Y1610-09A0	2	420090
UC4020777894	Y1610-11A0	1	420110
UC4100104426	Y1610-01A0	11	420010
UC4100104426	Y1610-05A0	10	420050
UC4100104453	Y1610-01A0	10	420010
UC4100105483	Y1651-01A0	4	420220
UC4100105483	Y1651-01A1	4	420230
UC4100516369	Y1610-01A0	1	420010
UC4100516369	Y1610-02A0	1	420020
UC4100656147	Y1610-01A0	3	420010
UC4100656147	Y1610-05A0	1	420050
UC4100663833	Y1610-02A0	1	420020
UC4100695445	Y1610-01A0	19	420010
UC4704145157	Y1610-02A0	2	420020
UC4704348567	Y1610-05A0	2	420050
UC4704348567	Y1610-07A0	1	420070
UC4704373637	Y1610-05A0	3	420050
UC4704373637	Y1610-08A0	1	420080
UC4704466252	Y1651-06A1	2	420310
UC4704468625	Y1651-01A1	9	420230
UC4704475917	Y1651-06A1	3	420310
UC4706037232	Y1651-04A0	2	420260
UC4706037232	Y1651-06A0	1	420300
UC4706037627	Y1651-04A1	2	420270
UC4706037627	Y1651-06A1	1	420310
UC4706037791	Y1651-02A0	1	420240
UC4706037791	Y1651-03A0	1	420250
UC4706054228	Y1651-01A0	1	420220
UC4706054228	Y1651-01A1	1	420230
UC4706054228	Y1651-02A0	1	420240
UC4706068108	Y1610-01A0	4	420010
UC4706068108	Y1610-09A0	1	420090
UC4706138362	Y1651-06A1	1	420310

PARTS N°	FIG. N°	INDEX	PAGE
UC4720219021	Y1651-03A0	4	420250
UC4720237588	Y1610-01A0	6	420010
UC4720237588	Y1610-14A0	1	420140
UC4726018787	Y1610-05A0	1	420050
UC4726018787	Y1610-06A0	1	420060

PARTS N°	FIG. N°	INDEX	PAGE

PARTS N°	FIG. N°	INDEX	PAGE