RUTHZIL TRATOR COMERCIAL DE PEÇAS LTDA 11 97083-6812 ROLANDO CITRANGULO

KOMATSU

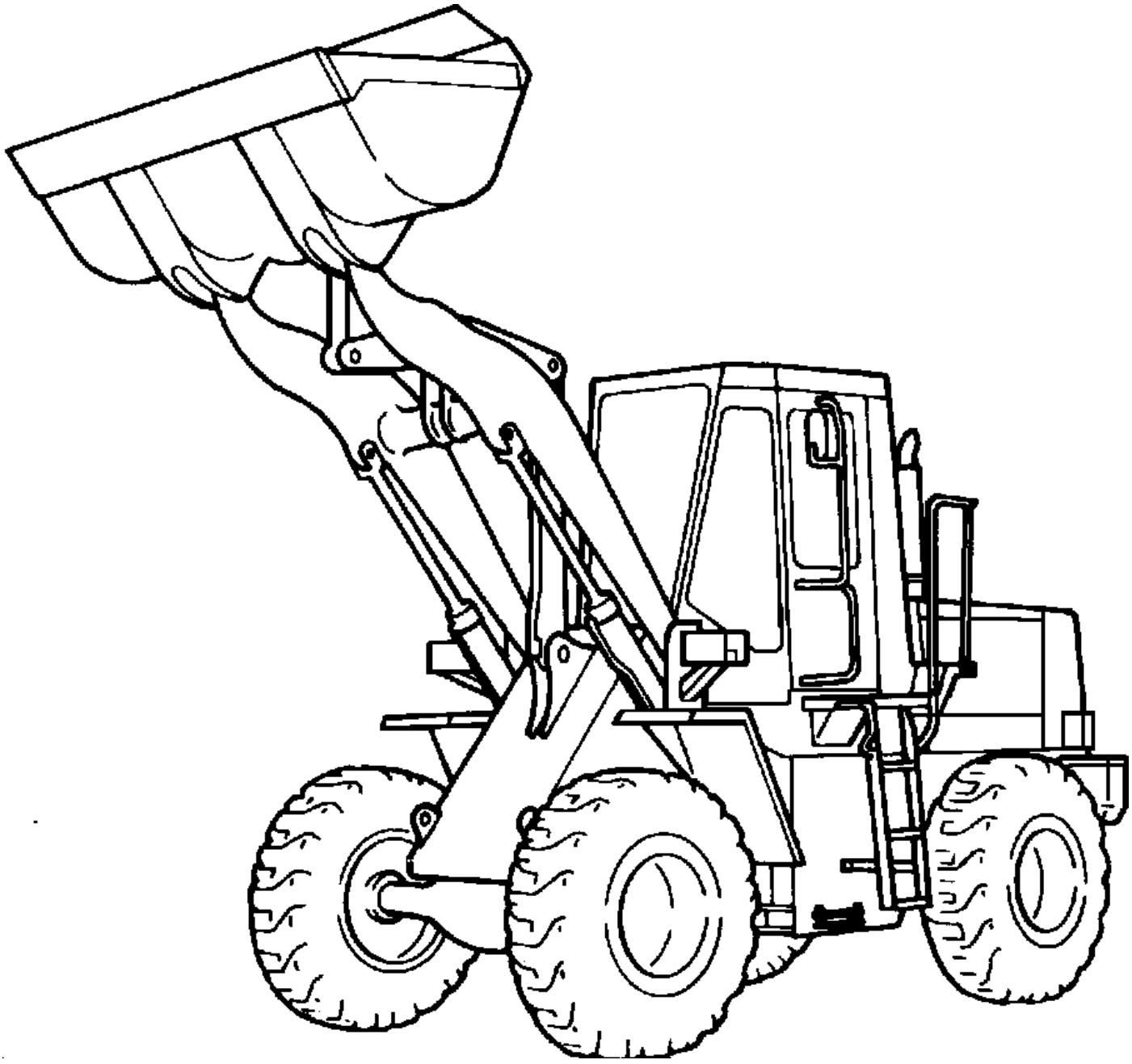

WA320-1LC Table of Contents

DESCRIPTION
ENGINE - S6D114-1
ENGINE RELATED PARTS & ELECTRICAL SYSTEM
TORQUE CONVERTER AND TRANSMISSION
DRIVE SHAFT, AXLES WHEELS & BRAKE SYSTEMS
STEERING CONTROL SYSTEM
FRAME, GUARD & SUPERSTRUCTURE
WORK EQUIPMENT CONTROL SYSTEM
WORK EQUIPMENT
MARK PLATES, TOOLS & KITS

ENGINE RELATED PARTS & ELECTRICAL SYSTEM

DESCRIPTION
ENGINE MOUNTING
ENGINE AND ACCESSORIES
ENGINE OIL DRAIN
AIR INTAKE SYSTEM
AIR CLEANER ASSEMBLY
EHAUST SYSTEM
ACCELERATOR PEDAL LINKAGE
ACCELERATOR PEDAL
RADIATOR
RADIATOR MOUNTING & ENGINE FAN GUARD
RADIATOR PIPING
FUEL TANK & PIPING
BATTERY & BATTERY BOX
ELECTRICAL SYSTEM (REAR MAIN ELECT. LINE)
INSTRUMENT PANEL
ELECTRICAL SYSTEM (RH CONSOLE)
ELECTRICAL SYSTEM (FRONT LAMP)
FRONT DRIVING LIGHT
L.H. TURN SIGNAL AND PARKING LIGHT
R.H. TURN SIGNAL AND PARKING LIGHT
ELECTRICAL SYSTEM (FRONT LINE)
ELECTRICAL SYSTEM (MAIN LINE)
ELECTRICAL SYSTEM (ENGINE SENSOR)
BATTERY CABLES
ELECTRICAL SYSTEM (REAR LAMP)
REAR COMBINATION LIGHT
MONITOR PANEL
SENSORS

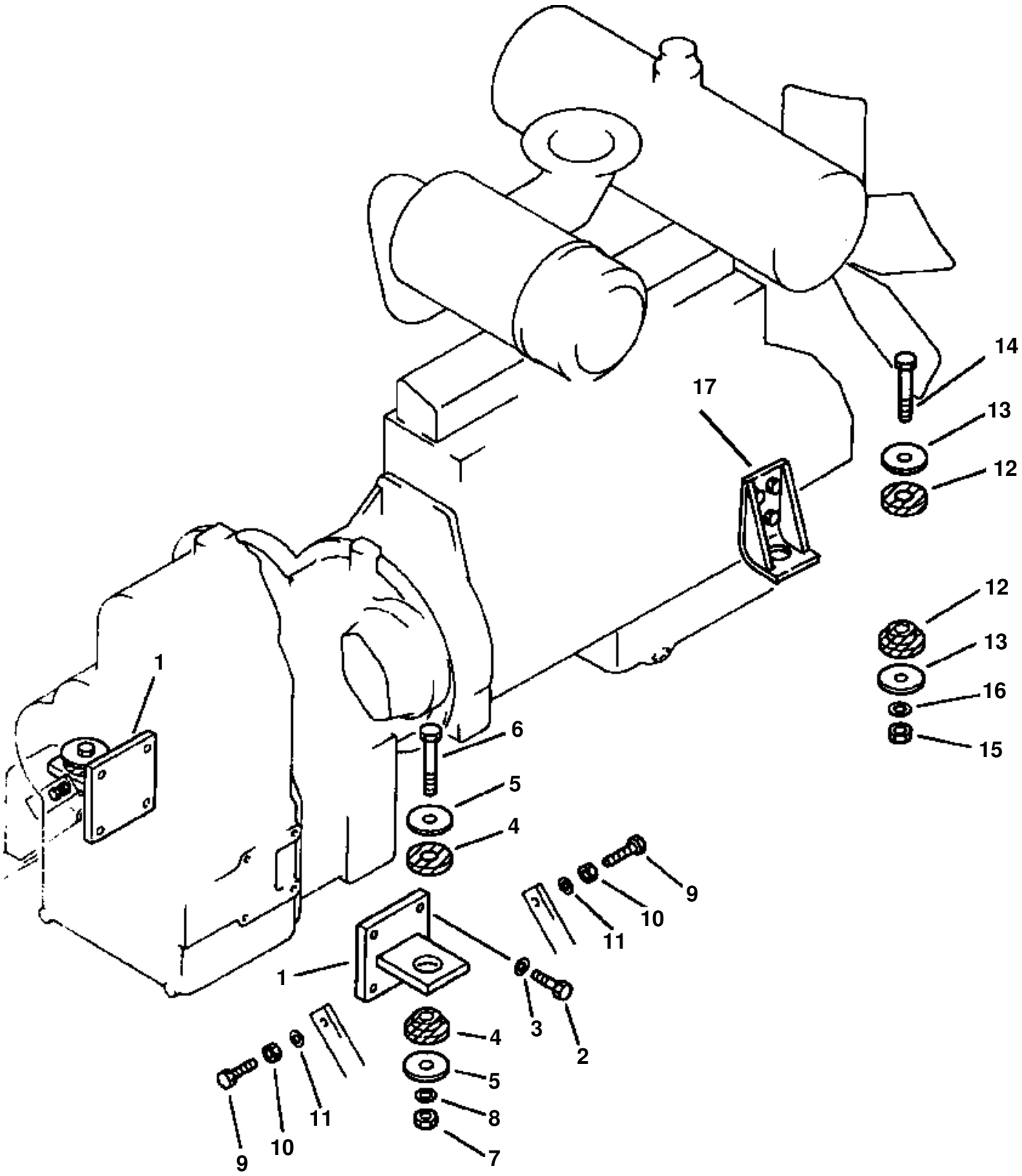
14
17
13
12
12
13
16
15
1
6
5
4
9
10
11
1
3
2
4
5
8
7
9
10
11

ENGINE MOUNTING

ITEM NO.	PART NO.	DESCRIPTION	Q'TY
1	417-14-11110	BRACKET	2
2	01010-31650	BOLT	8
3	01643-31645	WASHER	8
4	1107 410 C1	BASE, MOUNTING	2
5	419-01-11162	WASHER	4
6	01011-32230	BOLT	2
7	01580-02218	NUT	2
8	01643-32260	WASHER	2
9	01016-31670	BOLT	4
10	01580-01613	NUT	4
11	01643-31645	WASHER	4
12	1107 410 C1	BASE, MOUNTING	2
13	419-01-11162	WASHER	4
14	01011-32230	BOLT	2
15	01580-02218	NUT	2
16	01643-32260	WASHER	2
17	419-01-11220	BRACKET R.H	1
	419-01-11210	BRACKET L.H	1
	01643-31232	WASHER, BRACKET MOUNTING	8
	01010-51270	BOLT, BRACKET MOUNTING	4
	01010-51250	BOLT, BRACKET MOUNTING	4

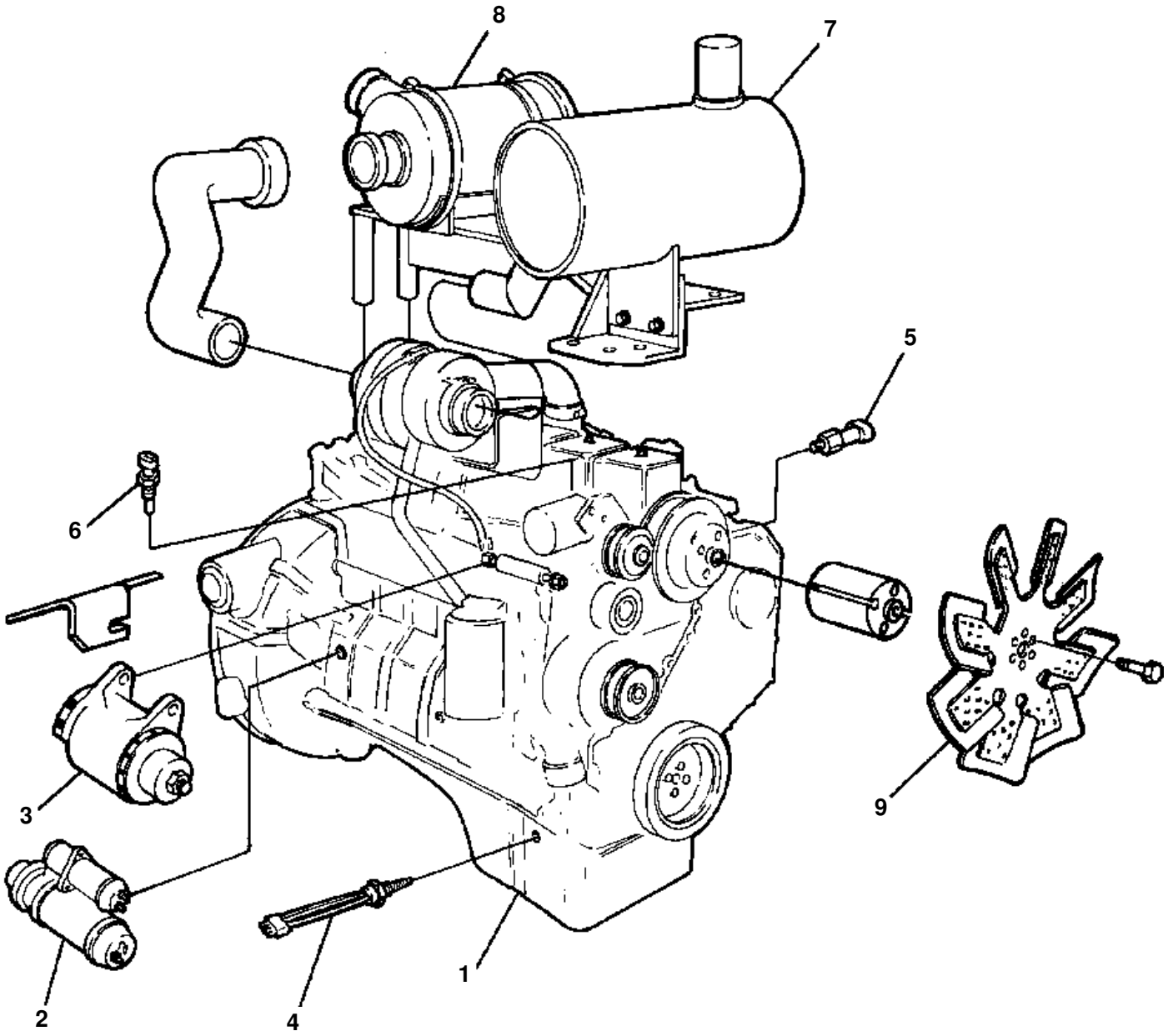
8
7
5
6
3
9
2
4
1

ENGINE AND ACCESSORIES

ITEM NO.	PART NO.	DESCRIPTION	Q'TY	REF
	419-01-A1010	ENGINE AND ACCESSORIES	1	
1	419-01-A1120	· ENGINE ASSY	1	F1
2	1243 215 H92	· MOTOR-CRANKING	1	
	1211 455 H1	· GASKET, CRANKING MOTOR	1	
	01010-51250	· BOLT	3	
	01643-31645	· WASHER	3	
	421-06-A1170	· BRACKET, RELAY MTG. WELDT	1	
	01580-00806	· · NUT	2	
	421-06-A1160	· · BRACKET, RELAY MTG	1	
	421-01-A1170	· RELAY, STARTER DISABLE	1	
	01435-00816	· BOLT	2	
3		· ALTERNATOR (SEE PG 01-064)		
4		· SENSOR, FLUID LEVEL ASS (SEE PG 01-074)		
		· · SENSOR, FLUID LEVEL (SEE PG 01-074)		
		· · CONNECTOR MALE (SEE PG 01-074)		
		· · SEAL (SEE PG 01-074)		
		· · CONNECTOR (SEE PG 01-074)		
5	206-01-A1150	· SWITCH, PRESSURE	1	
6	206-01-A1130	· SENSOR, TEMP	1	
	24 466 R1	· BSHG-PIPE RED, 3/4x1/2 BRS	1	
7		· MUFFLER (SEE PG 01-012)		
	419-01-A1150	· · BRACKET, MUFFLER	1	
	01010-51035	· BOLT	2	
	01643-31032	· WASHER	2	
	630 635 C91	· CLAMP ASM, V	1	
8		· AIR CLEANER ASSY (SEE PG 01-010)		
9	1243 202 H1	· FAN (BLOWER)	1	
	1237 716 H1	· SPACER	1	
	01011-51010	· BOLT	4	
		F1 - FOR SERVICE PARTS SEE SECTION E.		

FIG 12ADW320.002 **ENGINE OIL DRAIN**

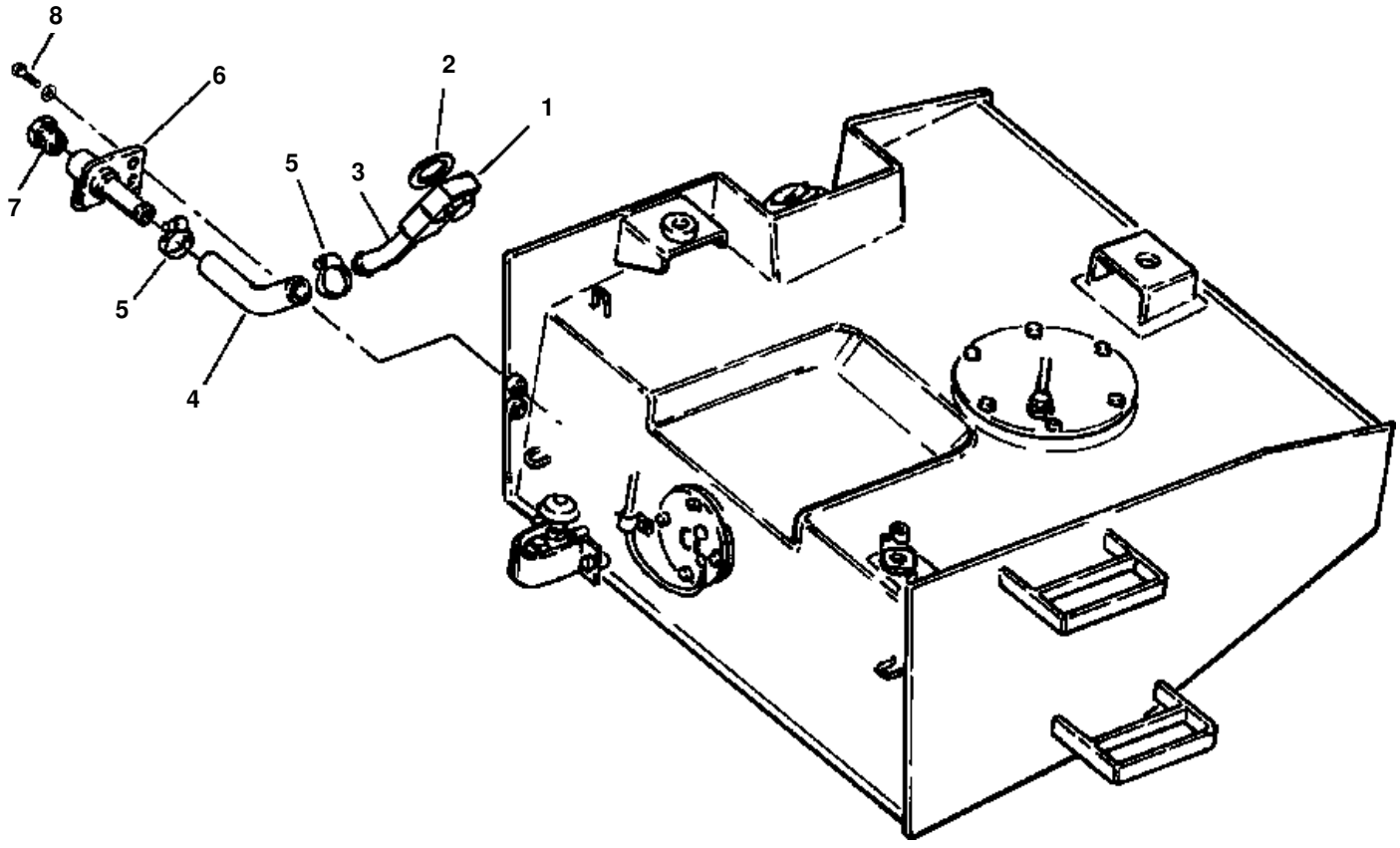

ENGINE OIL DRAIN

ITEM NO.	PART NO.	DESCRIPTION	Q'TY
1	07206-21518	JOINT	1
2	07005-01812	GASKET	2
3	419-01-11240	TUBE	1
4	419-01-11430	HOSE	1
5	07281-00359	CLAMP, HOSE	2
6	424-01-11120	TUBE	1
7	424-01-11110	PLUG	1
8	01435-01020	BOLT	2

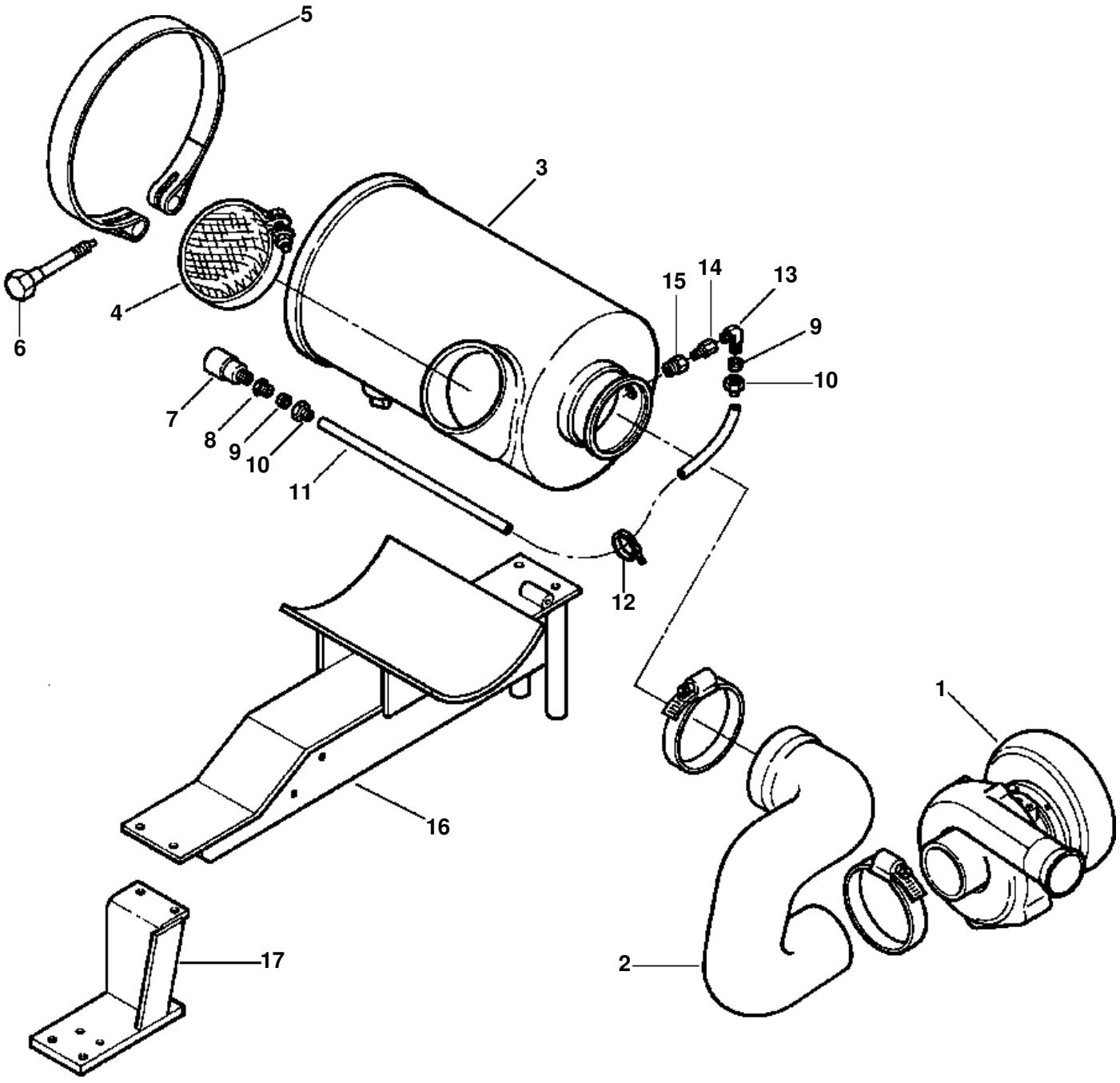
5
3
6
4
15
14
13
9
10
7
8
9
10
11
12
1
16
17
2

AIR INTAKE SYSTEM

ITEM NO.	PART NO.	DESCRIPTION	Q'TY
1		TURBOCHARGER (SEE PG E1-014)	
2	419-02-11310	HOSE	1
3		AIR CLEANER (SEE PG 01-010)	
4	6001-81-3890	SCREEN	1
5	6222-81-7190	BAND	2
6	(NSS)	BOLT, BAND	2
7	08670-02001	INDICATOR ASSEMBLY, AIR CLEANER	1
8	07836-00410	CONNECTOR	1
9	07831-00411	SLEEVE	2
10	07832-00410	NUT, SLEEVE	2
11	07822-00407	TUBE	1
12	08034-00876	BAND	1
13	07834-00410	ELBOW	1
14	424-01-11280	JOINT	1
15	424-01-11440	NIPPLE	1
16	419-01-A1170	BRACKET, AIR CLEANER & EXHAUST MUFFLER SUPPORT BAS	A/R
	419-09-11260	· BLOCK	2
	01580-01008	· NUT	2
	419-01-A1210	· STUD	2
	01643-31232	· WASHER	2
	01580-01210	· NUT	2
	42762-15260	· BOLT	2
17	419-01-A1180	BRACKET, SUPPORT	1
	01580-01008	· NUT	1
	01010-51030	· BOLT	6
	01643-31032	· WASHER	6
	423-01-A1240	PLATE	1
	01010-51030	· BOLT	4
	01643-31032	· WASHER	6
	01580-01008	· NUT	2

FIG 12AVW320.001 **AIR CLEANER ASSEMBLY**

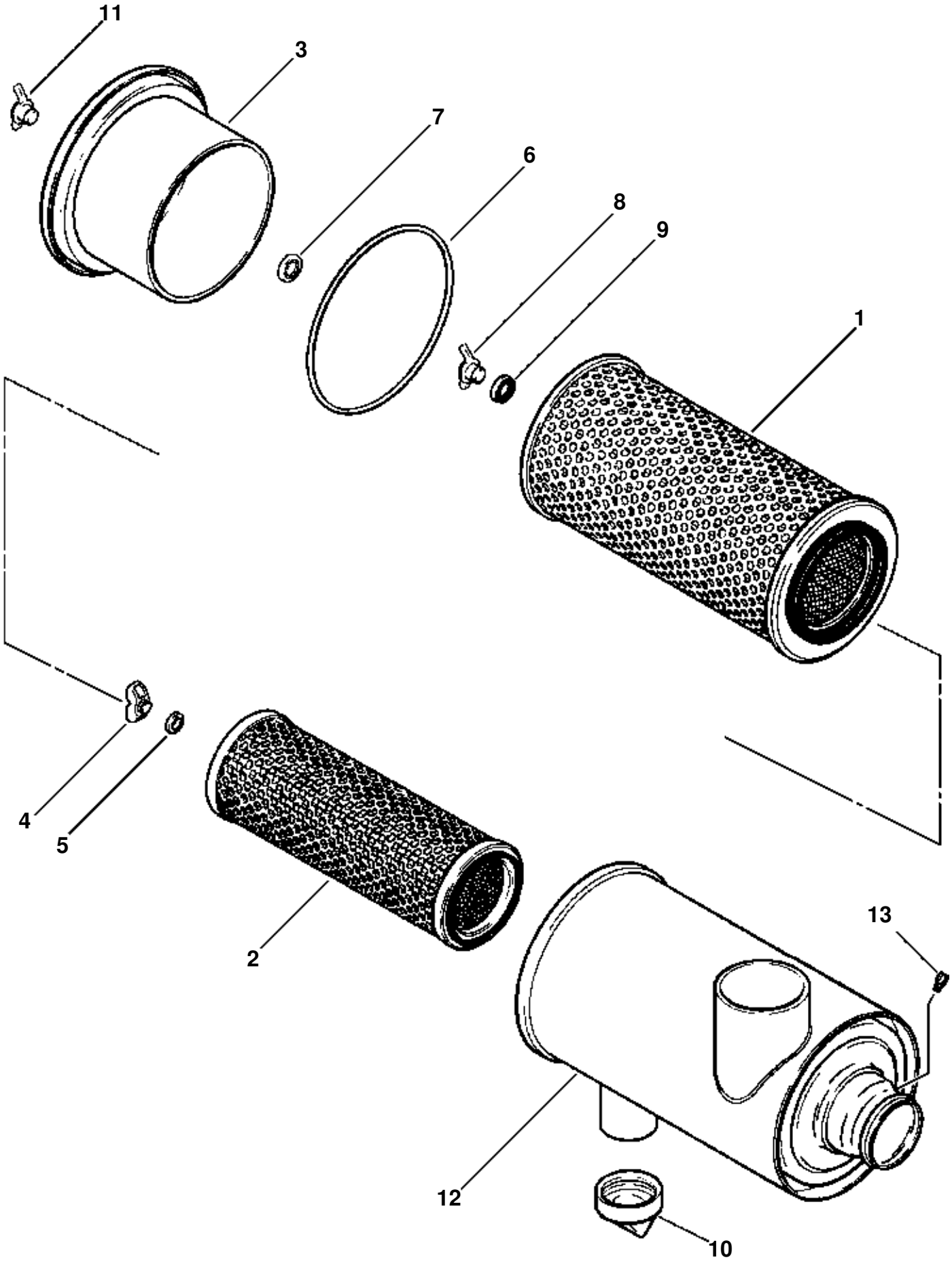

AIR CLEANER ASSEMBLY

ITEM NO.	PART NO.	DESCRIPTION	Q'TY	REF
	419-01-A1130	CLEANER ASSEMBLY, AIR	1	F1
1	419-02-11240	· ELEMENT, AIR CLEANER PRIMARY	1	
2	419-02-11230	· ELEMENT, AIR CLEANER SAFETY	1	
3	419-02-11250	· COVER, AIR CLEANER	1	
4	6001-81-9671	· NUT	1	
5	6001-81-9511	· GASKET	1	
6	419-02-11260	· GASKET, AIR CLEANER COVER	1	
7	6001-81-1970	· CLIP	1	
8	6001-81-1950	· NUT, WING	1	
9	6001-81-4440	· GASKET	1	
10	6001-81-1370	· VALVE, VACUATOR	1	
11	6001-81-1960	· NUT, COVER WING	1	
12	419-02-11220	· BODY	1	
13	561-02-12420	· CAP, NIPPLE	1	
		F1 - FOR MOUNTING HARDWARE, SEE PG 01-009.		

FIG 12AZW320.001 **EHAUST SYSTEM**

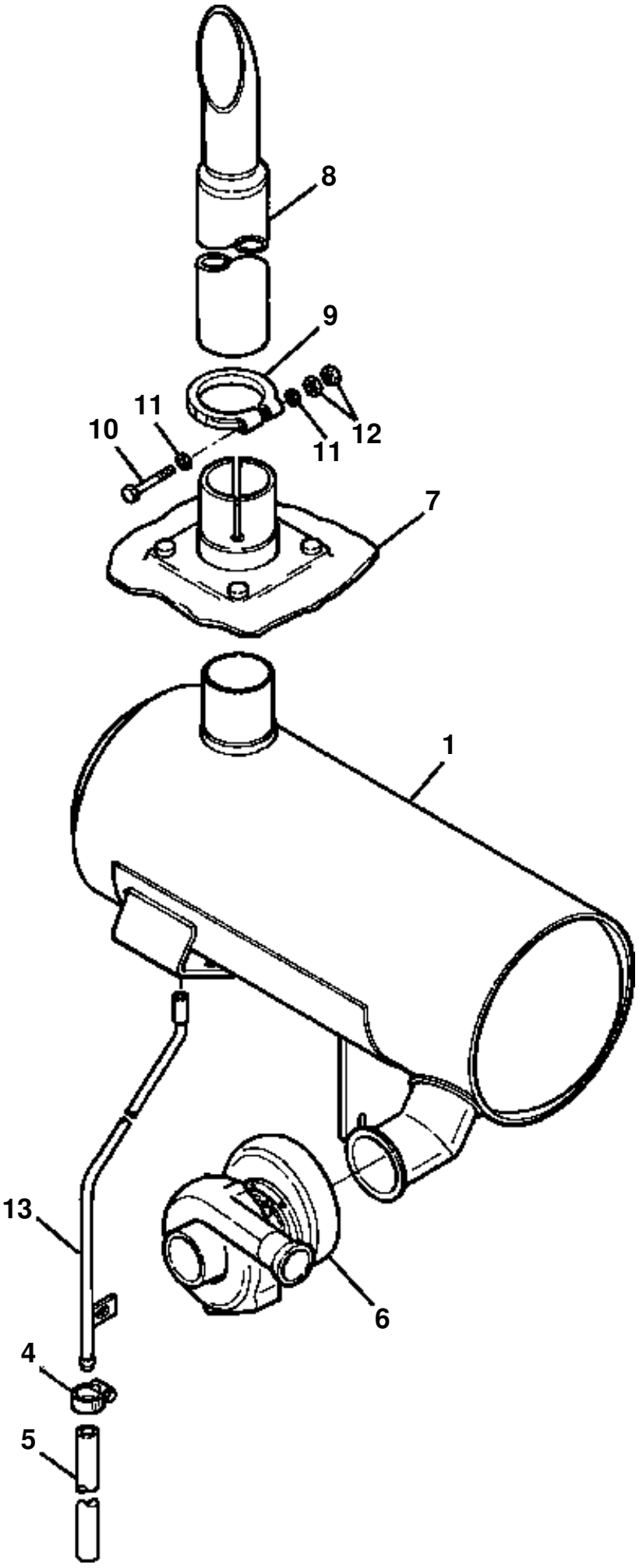

EHAUST SYSTEM

ITEM NO.	PART NO.	DESCRIPTION	Q'TY
1	419-01-A1140	MUFFLER	1
4	07281-00197	CLAMP	1
5	07261-20912	HOSE	1
6		TURBOCHARGER (SEE PG E1-014)	
7		BRACKET, EXHAUST (SEE PG 05-022)	
8	6151-11-5590	PIPE, EXHAUST	1
9	421-02-11120	CLAMP	1
10	6693-12-5550	BOLT	1
11	6151-11-5670	WASHER	2
12	01582-01411	NUT	2
13	419-01-A1190	TUBE, MUFFLER DRAIN	1

FIG 12BVW320.001 ACCELERATOR PEDAL LINKAGE

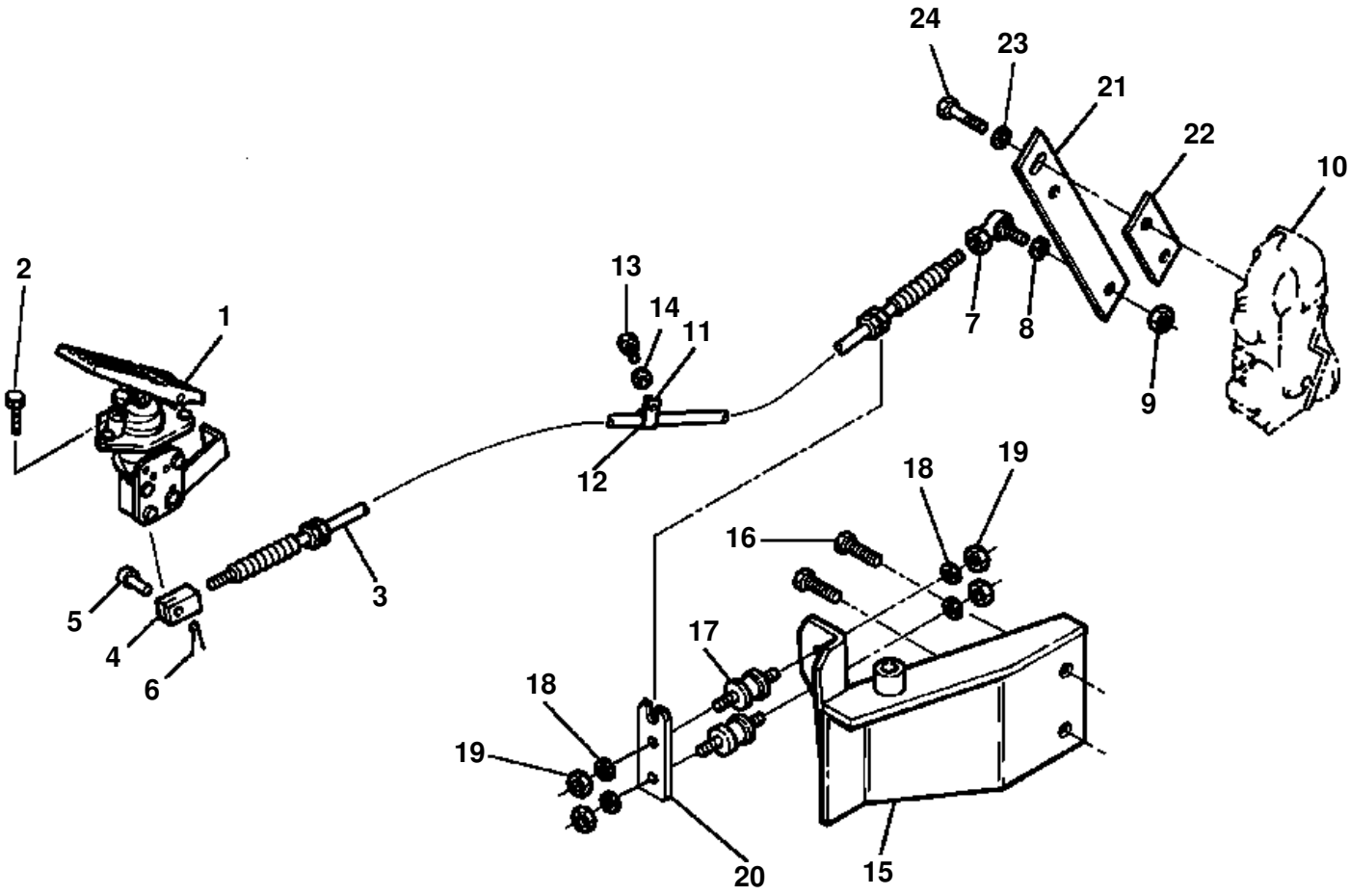

ACCELERATOR PEDAL LINKAGE

ITEM NO.	PART NO.	DESCRIPTION	Q'TY
1		PEDAL ASSEMBLY, ACCELERATOR (SEE PG 01-016)	
2	01435-00620	BOLT	3
3	421-43-A1110	CABLE, THROTTLE	1
4	04210-20624	YOKE	1
5	04205-10620	PIN	1
6	04050-11612	PIN, COTTER	1
7	424-09-12450	JOINT	1
8	01643-30623	WASHER	1
9	426-09-11130	NUT	1
10		PUMP, FUEL INJECTION (SEE PG E4-006)	
11	424-06-12760	CLIP	1
12	423-43-11560	RUBBER	1
13	01010-51016	BOLT	1
14	01643-31032	WASHER	1
15	423-01-A1170	BRACKET	1
16	01435-01020	BOLT	2
17	424-43-11240	CUSHION	2
18	424-43-11250	WASHER	4
19	01580-10605	NUT	4
20	423-43-11551	PLATE	1
21	423-43-A1140	LEVER	1
22	423-43-11540	PLATE	1
23	01643-30623	WASHER	2
24	01010-50620	BOLT	2

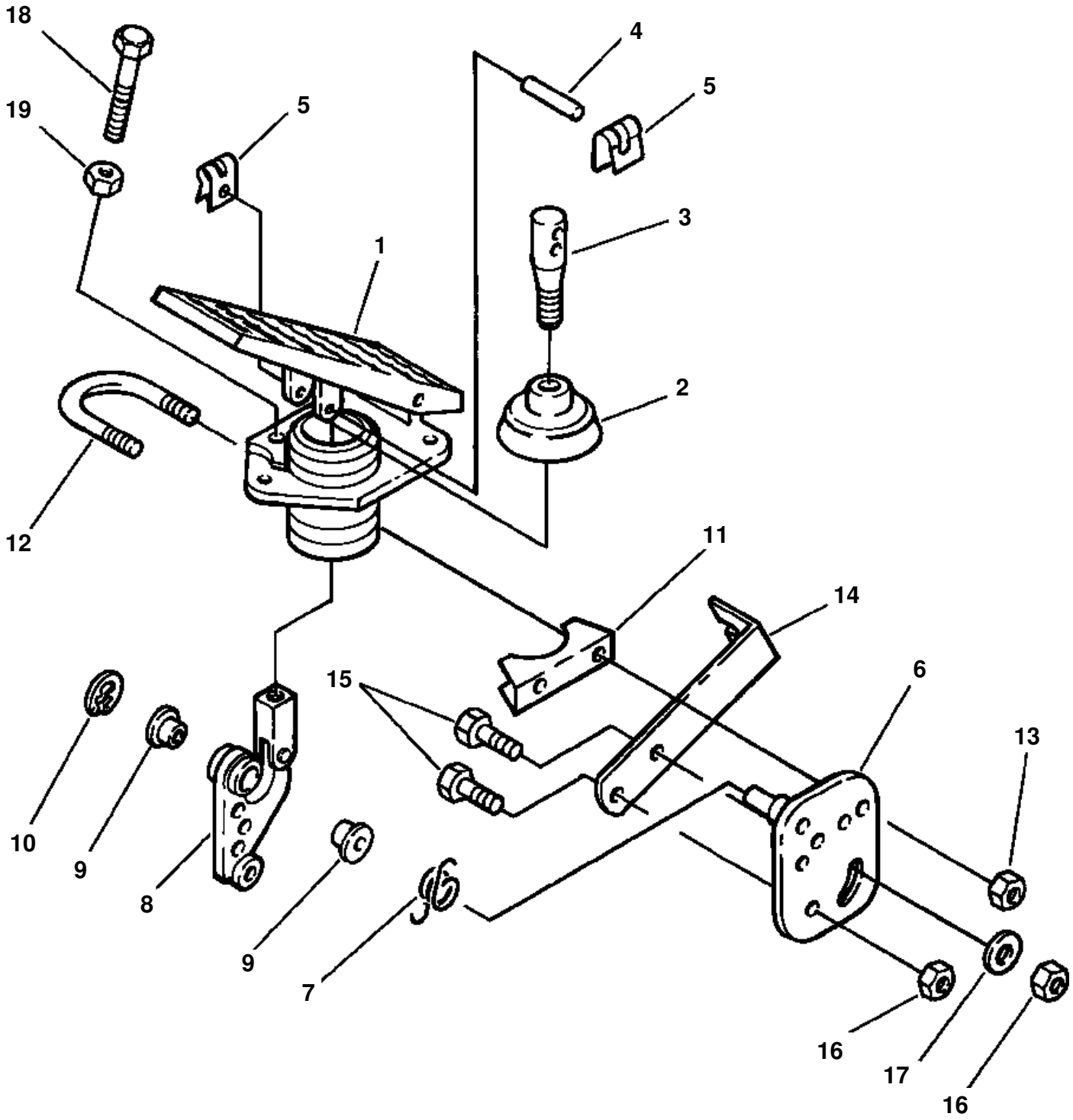
18
19
5
4
5
3
1
2
12
11
14
15
6
13
10
9
8
9
7
16
17
16

ACCELERATOR PEDAL

ITEM NO.	PART NO.	DESCRIPTION	Q'TY	REF
	417-43-11200	PEDAL ASSEMBLY, ACCELERATOR	1	F1
1	417-43-11210	· PEDAL AND BODY	1	
2	417-43-11360	· BOOT	1	
3	417-43-11310	· ROD	1	
4	417-43-11320	· PIN	1	
5	417-43-11330	· CLIP	2	
6	417-43-11220	· PLATE	1	
7	417-43-11240	· SPRING	1	
8	417-43-11230	· LEVER	1	
9	417-43-11250	· BEARING	2	
10	417-43-11260	· CLIP	1	
11	417-43-11290	· SUPPORT	1	
12	417-43-11270	· U-BOLT	1	
13	417-43-11280	· NUT	2	
14	417-43-11340	· SUPPORT	1	
15	01010-50616	· BOLT	2	
16	417-43-11350	· NUT	2	
17	01643-30623	· WASHER	1	
18	01010-50860	· BOLT	1	
19	01580-10806	· NUT	1	
		F1 - FOR MOUNTING HARDWARE, SEE PG 01-015.		

FIG 06AMW320.001 **RADIATOR**

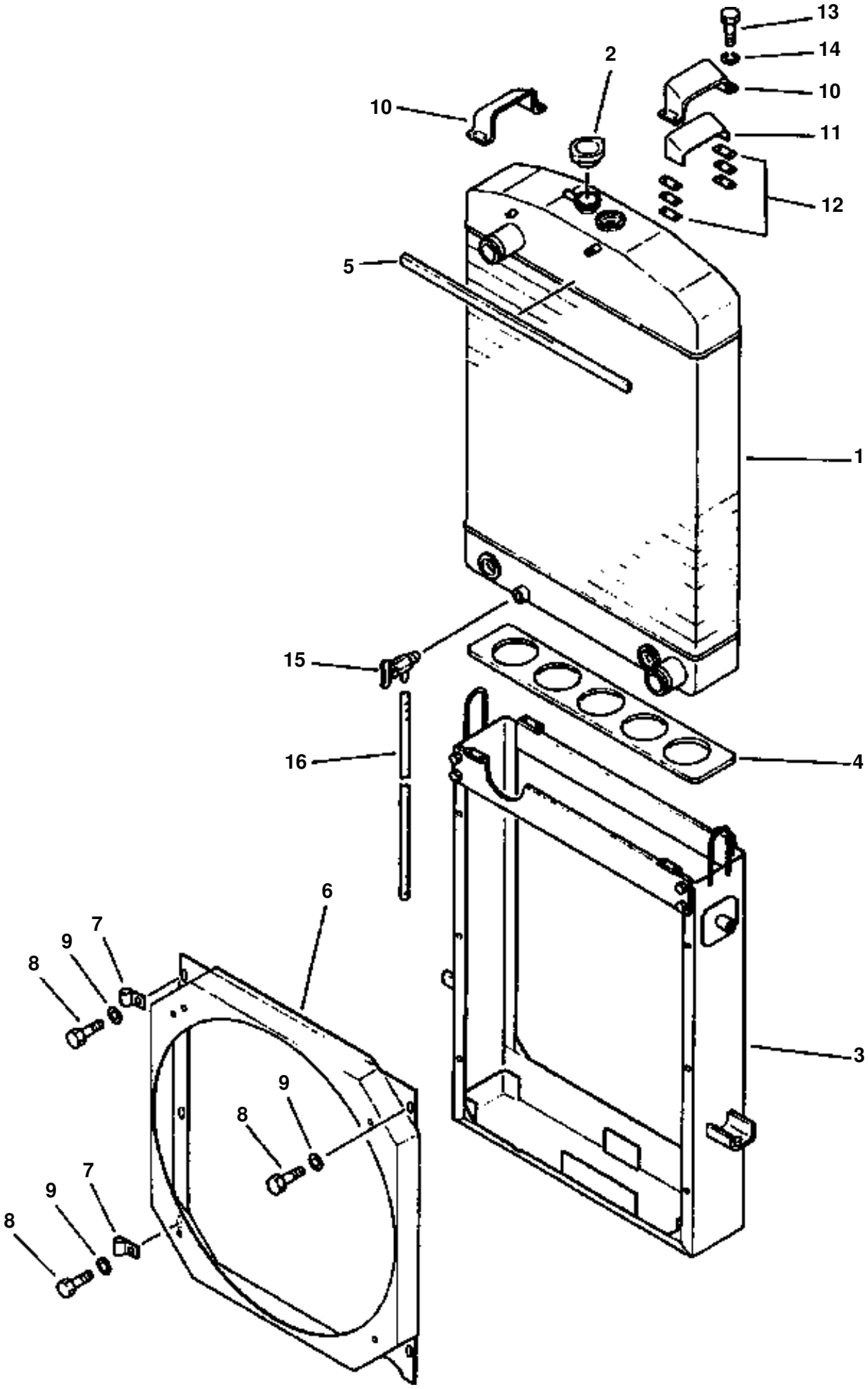

RADIATOR

ITEM NO.	PART NO.	DESCRIPTION	Q'TY
	419-03-11601	RADIATOR ASSEMBLY	1
1	419-03-11202	· RADIATOR CORE	1
2	23S-03-11150	· CAP, RADIATOR	1
3	419-03-11133	· FRAME	1
4	419-03-11180	· SEAT	1
5	419-03-11190	· PACKING	1
6	419-03-11611	· SHROUD	1
7	08036-11214	· CLIP	2
8	01010-51020	· BOLT	6
9	01643-31032	· WASHER	6
10	419-03-11150	· CLAMP	2
11	419-03-11160	· SEAT	2
12	419-03-11170	· SHIM - 0.6MM	16
13	01010-50825	· BOLT	8
14	01602-20825	· WASHER, SPRING	8
15	419-03-11340	· COCK, DRAIN	1
16	419-03-11350	· HOSE	1

FIG 06ARW320.001 RADIATOR MOUNTING & ENGINE FAN GUARD

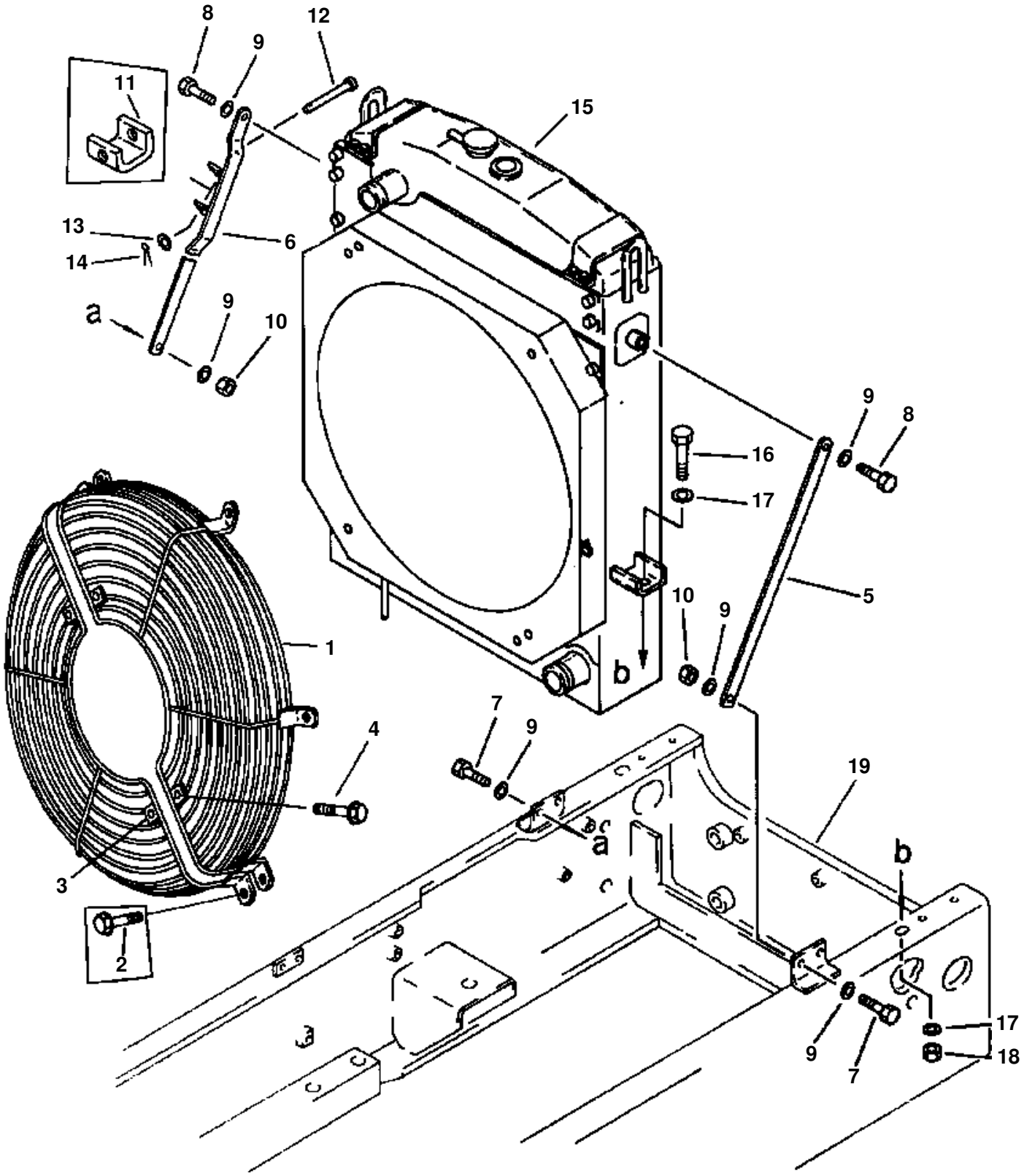

RADIATOR MOUNTING & ENGINE FAN GUARD

ITEM NO.	PART NO.	DESCRIPTION	Q'TY
1	419-03-11560	GUARD	2
N/I	419-963-1610	NET, GUARD - A/C & HEATER MOD	1
	419-03-11560	NET, GUARD - A/C & HEATER MOD	1
2	01435-01020	BOLT	8
N/I	01643-31032	WASHER - A/C & HEATER MOD	2
3	416-03-11420	PLATE	2
N/I	419-963-1620	PLATE - A/C & HEATER MOD	2
4	01435-00812	BOLT	4
5	419-03-11250	PLATE	1
6	419-03-11261	BAR, WELO	1
7	01010-31235	BOLT	2
8	01010-31230	BOLT	2
9	01643-31232	WASHER	6
10	01580-01210	NUT	2
11	424-54-14340	STOPPER	1
12	419-03-11270	PIN	1
13	01641-01423	WASHER	1
14	04050-05030	PIN, COTTER	1
15		RADIATOR ASSEMBLY (SEE PG 01-018)	
16	01010-31650	BOLT	2
17	01643-31645	WASHER	4
18	01580-01613	NUT	2
19		FRAME, REAR (SEE PG 05-006)	

FIG 06AHW320.001 RADIATOR PIPING

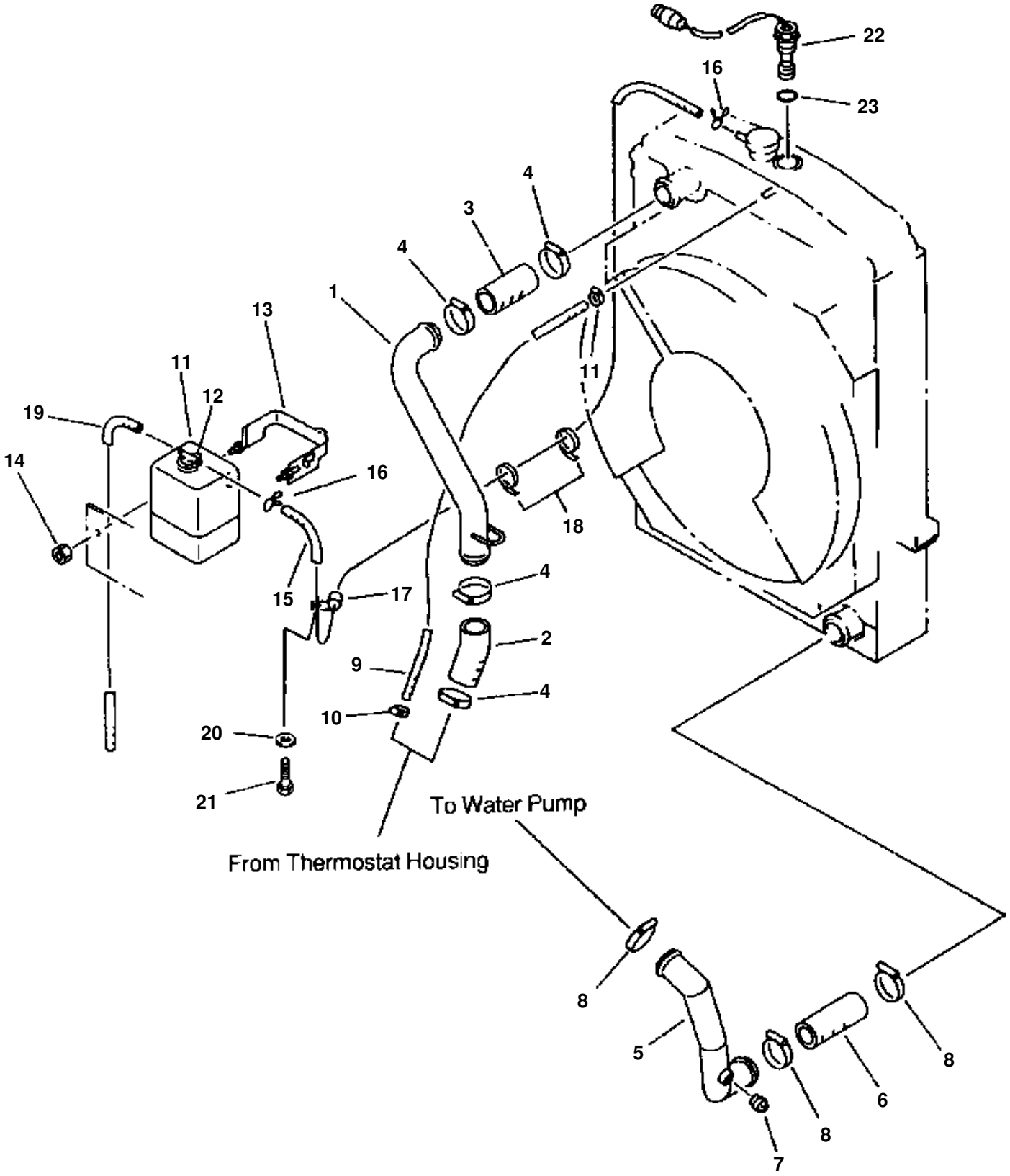

RADIATOR PIPING

ITEM NO.	PART NO.	DESCRIPTION	Q'TY
1	419-03-11521	TUBE	1
2	419-03-11540	HOSE	1
3	419-03-11510	HOSE	1
4	07281-00709	CLAMP	4
5	419-03-11531	TUBE	1
	198-03-22180	· SEAT	1
6	419-03-11510	HOSE	1
7	07042-20415	PLUG	1
8	07281-00709	CLAMP	3
9	419-03-11331	HOSE	1
10	07281-00167	CLAMP	2
11	419-03-11410	TANK, RESERVE	1
12	205-03-71531	· CAP, RESERVE TANK	1
	205-03-71540	· PACKING	1
13	205-03-71260	BAND	1
	01572-20816	· SEAT	1
	01580-00806	· NUT	2
	08036-41214	· CLIP	1
14	01584-00806	NUT	2
15	419-03-11380	HOSE	1
16	206-03-43340	CLIP	2
17	08036-11214	CLIP	1
18	08034-00536	BAND	2
19	419-03-11390	HOSE	1
20	01643-31032	WASHER	1
21	01010-51016	BOLT	1
22		SENSOR, RADIATOR WATER LEVEL (SEE PG 01-074)	
23	07002-23634	O-RING	1

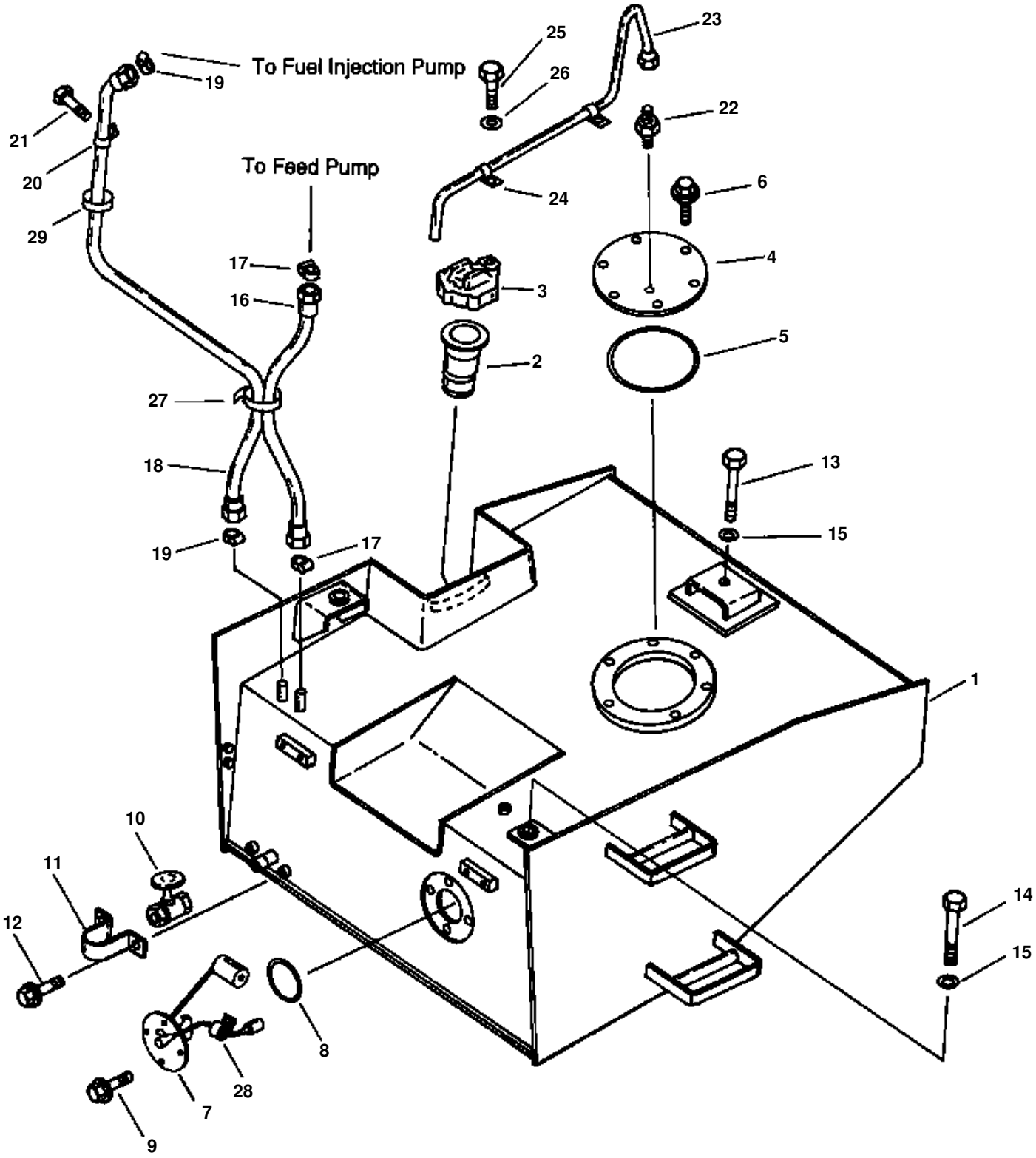
To Fuel Injection Pump
To Feed Pump
1
2
3
4
5
6
7
8
9
10
11
12
13
14
15
16
17
18
19
20
21
22
23
24
25
26
27
28
29

FUEL TANK & PIPING

ITEM NO.	PART NO.	DESCRIPTION	Q'TY
1	419-04-11210	TANK, FUEL	1
2	07056-18416	STRAINER	1
3	423-04-11361	CAP	1
	20Y-04-11240	· PACKING	1
	423-04-11770	· PACKING	1
4	421-04-11182	COVER	1
5	07000-05200	O-RING	1
6	01435-01020	BOLT	6
7		SENSOR, FUEL TANK (SEE PG 01-074)	
8	07000-02085	O-RING	1
9	01435-01014	BOLT	4
10	416-04-10130	VALVE, FUEL SHUTOFF	1
11	419-04-11120	COVER	1
12	01435-00816	BOLT	2
13	01010-32450	BOLT	1
14	01010-32460	BOLT	2
15	01643-32460	WASHER	3
16	07270-41012	HOSE (CUT 354CM LONG)	1
17	07281-00197	CLAMP	4
18	07270-20890	HOSE	1
19	07281-00167	CLAMP	2
20	08036-01414	CLIP	1
21	01435-01016	BOLT	1
22	07214-71013	CONNECTOR	1
23	419-04-10123	TUBE	1
24	424-04-11120	CLIP	2
25	01010-51016	BOLT	2
26	01643-31032	WASHER	2
27	08034-00519	BAND	2
28	08036-00814	CLIP	2
29	08034-00519	BAND	1
N/I	1243 000 H1	STRAINER, FUEL	1
	441 190 C1	ELBOW 90 DEG	1
	07270-41012	HOSE (CUT 8 CM LONG)	1

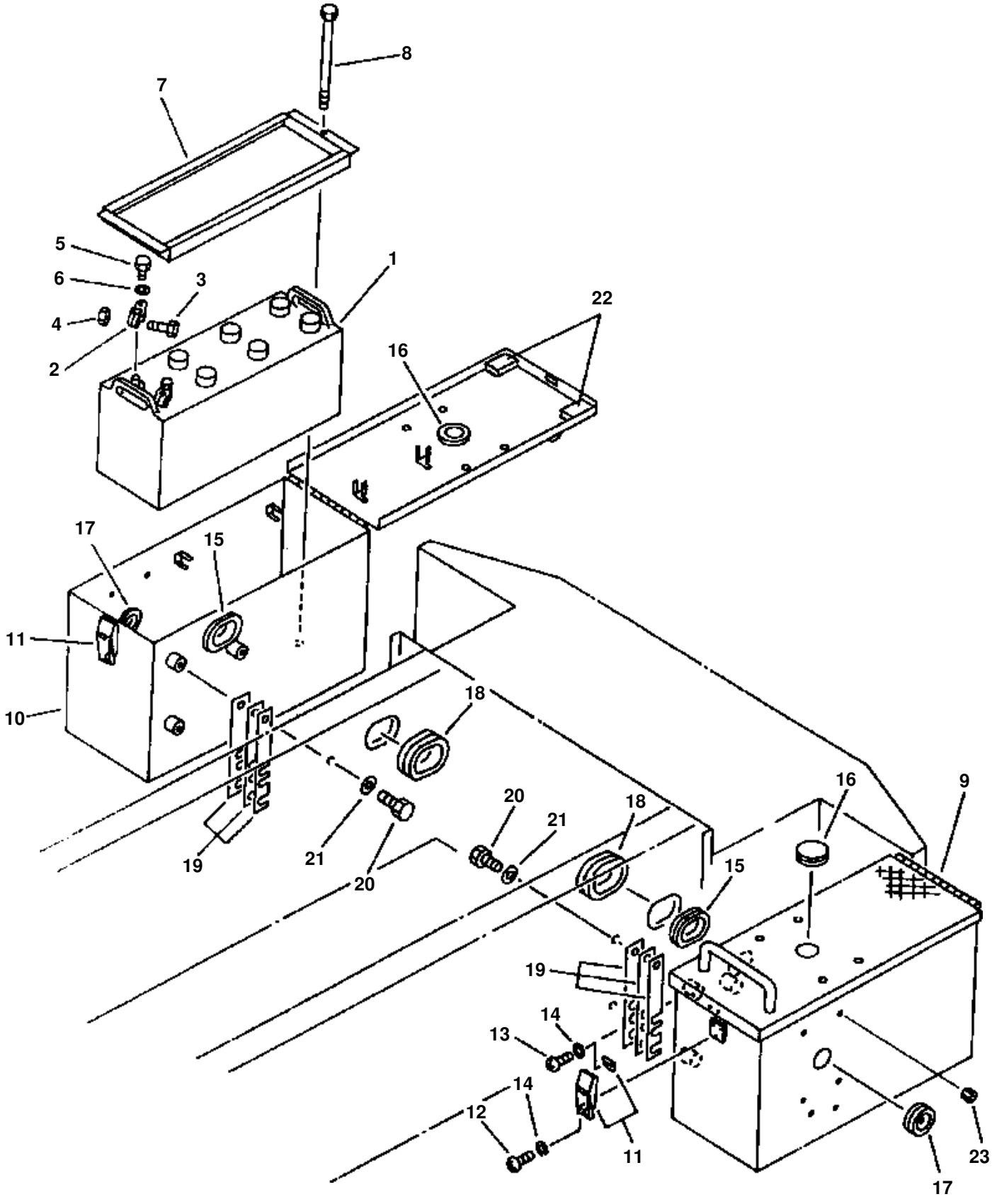
8
7
5
6
3
4
2
1
22
16
17
15
11
10
18
19
21
20
21
20
18
16
9
15
19
14
13
14
12
11
23
17

BATTERY & BATTERY BOX

ITEM NO.	PART NO.	DESCRIPTION	Q'TY
1	419-Z28-1110	BATTERY - 12V-250AH	2
2	08000-00000	TERMINAL - POSITIVE	2
	08000-00001	TERMINAL - NEGATIVE	2
3	NNS	· BOLT	1
4	01580-00806	· NUT	2
5	NNS	· BOLT	1
6	NNS	· WASHER	1
7	418-06-11140	HOLDER	2
	418-06-A1130	HOLDER	2
8	418-09-11120	BOLT	4
	418-09-11121	BOLT	4
9	419-06-11115	BOX - L.H	1
	419-06-11150	· GRIP	1
	415-06-12440	· CLIP	6
	01571-01016	· SEAT	2
	01571-01625	· SEAT	3
	01580-00806	· NUT	2
	419-06-A1130	BOX - L.H	1
10	419-06-11215	BOX - R.H	1
	419-06-11150	· GRIP	1
	415-06-12440	· CLIP	6
	01571-01016	· SEAT	2
	01571-01625	· SEAT	3
	01580-00806	· NUT	2
	419-06-A1140	BOX - R.H	1
11	421-09-12321	HOLDER	2
12	01220-40408	SCREW	6
13	01220-40410	SCREW	4
14	01641-20405	WASHER	10
15	426-09-11230	GROMMET	2
16	08037-03614	GROMMET	2
17	09415-03614	CAP	2
18	419-09-11450	GROMMET	2
19	423-06-11451	SHIM - 1.Omm	A/R
20	01010-31640	BOLT	6
21	01643-31645	WASHER	6
22	421-09-12780	CUSHION, STRIP	4
23	09415-00506	CAP	12

FIG 08ADW320.008 ELECTRICAL SYSTEM (REAR MAIN ELECT. LINE)

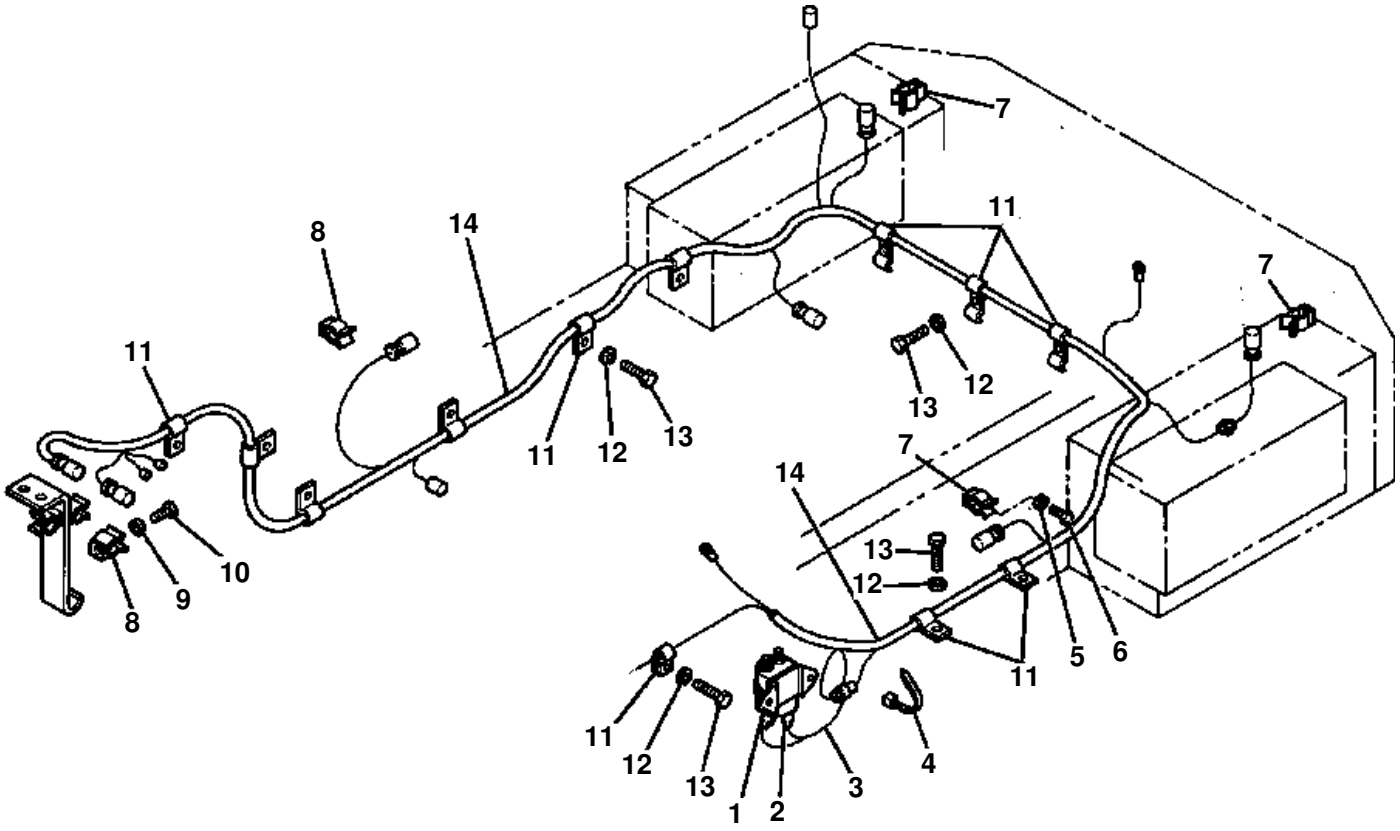

ELECTRICAL SYSTEM (REAR MAIN ELECT. LINE)

ITEM NO.	PART NO.	DESCRIPTION	Q'TY
1	421-06-11930	RELAY	1
2	08038-02027	CAP	2
3	419-06-12390	HARNESS WIRING	1
N/I	08031-10204	· TERMINAL	1
	08050-03710	· CONNECTOR	2
	08031-10208	· TERMINAL	1
	421-09-11160	· CONNECTOR	1
	421-09-11260	· TERMINAL	1
4	08034-00519	BAND	A/R
5	01641-20608	WASHER	5
6	01220-40608	SCREW	5
7	08052-01711	CLIP	5
8	08052-02711	CLIP	3
9	01641-20608	WASHER	3
10	01220-40608	SCREW	3
11	08036-01814	CLIP	12
12	01643-31032	WASHER	14
13	01010-51016	BOLT	14
14	419-06-12980	WIRING HARNESS	1
N/I	421-06-11970	· DIODE	2
	08050-02810	· BODY ASSY	2
	08050-03710	· CONNECTOR	1
	08050-03810	· CONNECTOR	1
	08050-12010	· CONNECTOR	2
	08050-12110	· BODY	1
	08050-12200	· O-RING	2
	08050-12300	· GROMMET	3
	08050-00400	· TERMINAL	21
	08050-00500	· TERMINAL	11
	08050-00600	· PLUG	4
	08027-02620	· CONNECTOR	2
	08022-04001	· CONNECTOR	1
	08031-11506	· TERMINAL	1
	08031-11508	· CONNECTOR	1
	08031-10210	· TERMINAL	2
	08031-10806	· TERMINAL	2
	0834-00519	· BAND	A/R
	418-06-11360	· CONNECTOR	1
	421-09-11420	· CONNECTOR	2
	421-09-11650	· TERMINAL	4
	22X-06-16130	· CONNECTOR	1
	22X-06-16120	· CONNECTOR	1
	08036-02514	CLIP	3
	08036-01414	CLIP	2
	08036-00814	CLIP	1
	08036-11214	CLIP	2
	08036-11210	CLIP	2

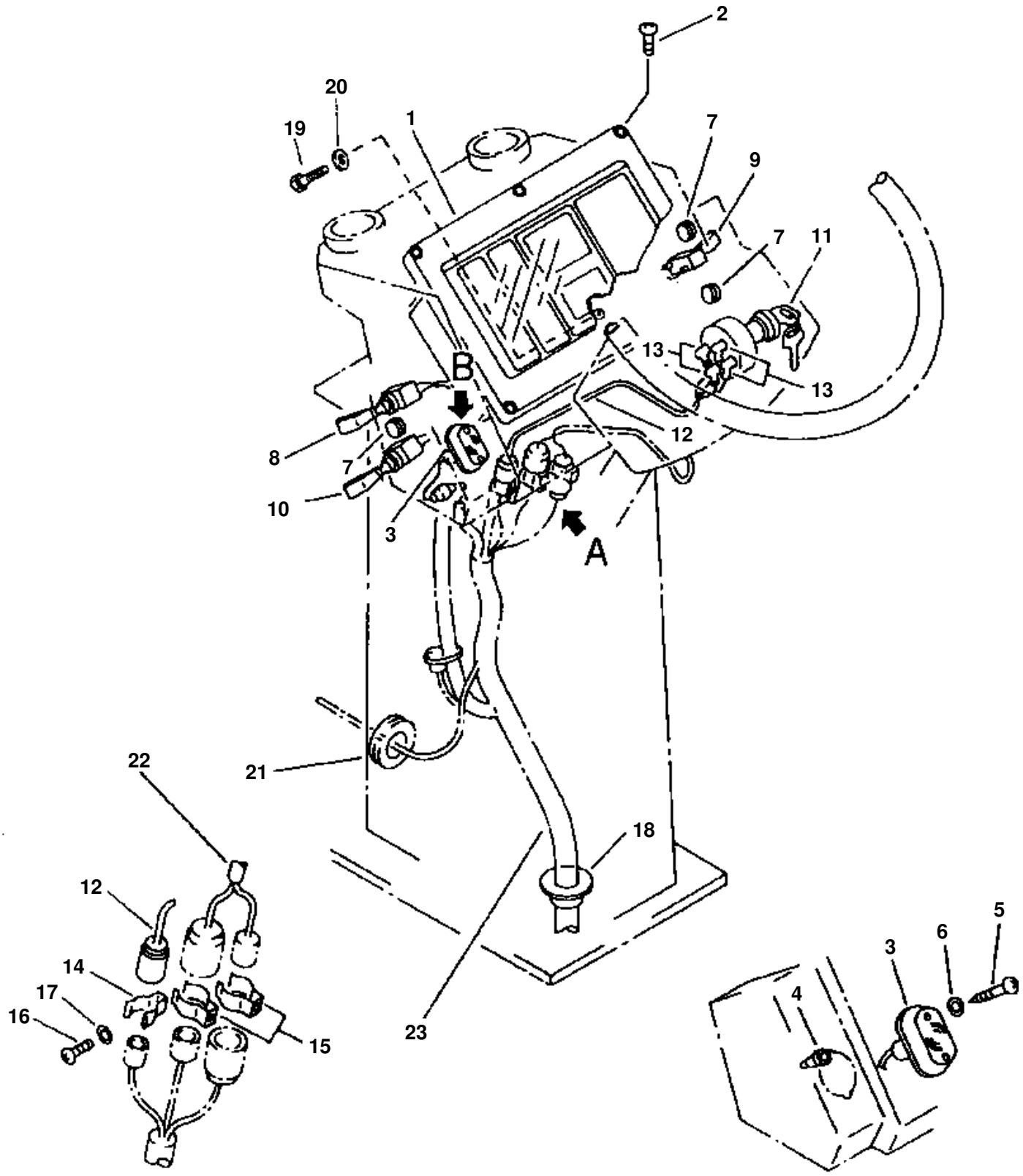
2
20
19
1
7
9
7
11
13
13
B
12
8
7
10
3
A
21
22
18
12
14
17
16
15
23
5
6
3
4
Detail A
Detail B

INSTRUMENT PANEL

ITEM NO.	PART NO.	DESCRIPTION	Q'TY
1	7831-56-2000	PANEL ASSEMBLY, INSTRUMENT	1
2	01225-40620	SCREW	6
3	23S-06-13270	LAMP ASSEMBLY, CAUTION	1
	08110-12410	· BULB - 12W	1
4	421-06-15321	GROMMET	2
5	421-06-15330	SCREW	2
6	421-06-15340	WASHER	2
7	09415-00706	CAP	3
8	421-06-11551	SWITCH, TRANSMISSION CUT OFF	1
N/I	01580-10403	· NUT	1
	08023-10010	· TUBE	1
	421-09-11540	· CONNECTOR	1
	421-09-11550	· TERMINAL	4
9	421-06-11521	SWITCH, WORK LAMP	1
N/I	01580-10403	· NUT	1
	08023-10010	· TUBE	1
	421-09-11520	· CONNECTOR	1
	421-09-11550	· TERMINAL	2
10	418-06-11410	SWITCH, ETHER INJECTION	1
11	08086-20000	SWITCH, STARTING	1
N/I	01580-10403	· NUT	1
	08023-10010	· TUBE	1
	421-09-11520	· CONNECTOR	1
	421-09-11550	· TERMINAL	2
12	421-06-11692	WIRE ASSEMBLY	1
N/I	2830-16420	· CONNECTOR	1
	08031-10205	· TERMINAL	4
13	08038-00518	CAP	4
14	08052-01911	CLIP	1
15	08052-02711	CLIP	2
16	01220-40608	SCREW	3
17	01641-20608	WASHER	3
18	421-06-12651	GROMMET	1
19	01010-50820	BOLT	2
20	01643-30823	WASHER	2
21	08037-03614	GROMMET	1
22		FROM TRANS. CONT. SWITCH (SEE PG 04-022)	
23		WIRE ASSEMBLY (SEE PG 01-054)	

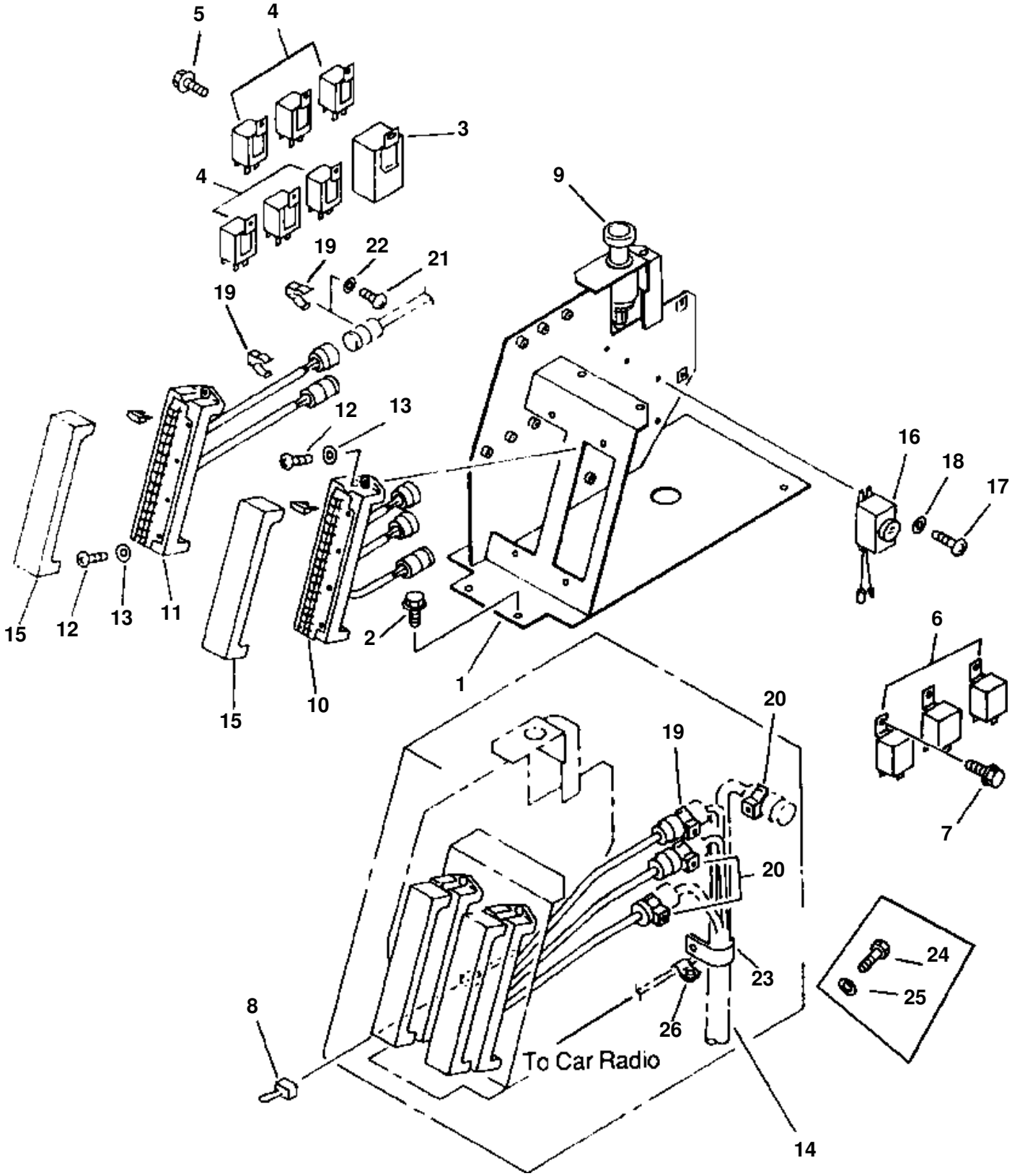
5
4
3
4
9
19
22
21
19
12
13
16
18
17
15
12
13
11
2
1
6
15
10
20
19
20
7
24
25
23
26
8
To Car Radio
14

ELECTRICAL SYSTEM (RH CONSOLE)

ITEM NO.	PART NO.	DESCRIPTION	Q'TY
1	419-06-11134	BOX	1
2	01435-00820	BOLT	3
N/I	01643-30823	WASHER	3
	08036-10814	CLIP	4
3	22W-06-13251	FLASHER	1
4	287-06-16410	RELAY	6
	287-06-16420	· BRACKET	1
5	01435-00612	BOLT	7
6	421-06-11940	RELAY	3
	287-06-16420	· BRACKET	1
7	01435-00612	BOLT	3
8	424-06-12240	CONNECTOR	1
9	08913-02400	LIGHTER	1
10	419-06-12381	BOX, FUSE	1
N/I	283-06-16110	· BODY	1
	283-06-16160	· TERMINAL	30
	283-06-16180	· FUSE - 5A	2
	283-06-16190	· FUSE - 10A	13
	22W-06-13160	· FUSE - 20A	4
	08050-12010	· CONNECTOR	1
	08050-12200	· O-RING	1
	08050-12300	· GROMMET	1
	08050-12810	· CONNECTOR	1
	08050-00400	· TERMINAL	10
	08050-00600	· PLUG	2
11	419-06-12371	BOX, FUSE	1
N/I	28306-16110	· BODY	1
	22W-06-13160	· FUSE - 20A	2
	283-06-16190	· FUSE - 10A	6
12	01220-40620	SCREW	4
13	01641-20608	WASHER	4
14	419-06-12970	WIRE ASSEMBLY (SEE PG 01-054)	
15	283-06-16120	COVER	2
16	207-06-31160	BUZZER	1
17	01220-40412	SCREW	2
18	01641-20405	WASHER	2
19	08052-02411	CLIP	3
20	08052-02711	CLIP	3
21	01220-40608	SCREW	6
22	01641-20608	WASHER	6
23	08036-03014	CLIP	1
24	01010-51016	BOLT	3
25	01643-31032	WASHER	3
26	08036-10614	CLIP	1

FIG 08BDW320.001 ELECTRICAL SYSTEM (FRONT LAMP)

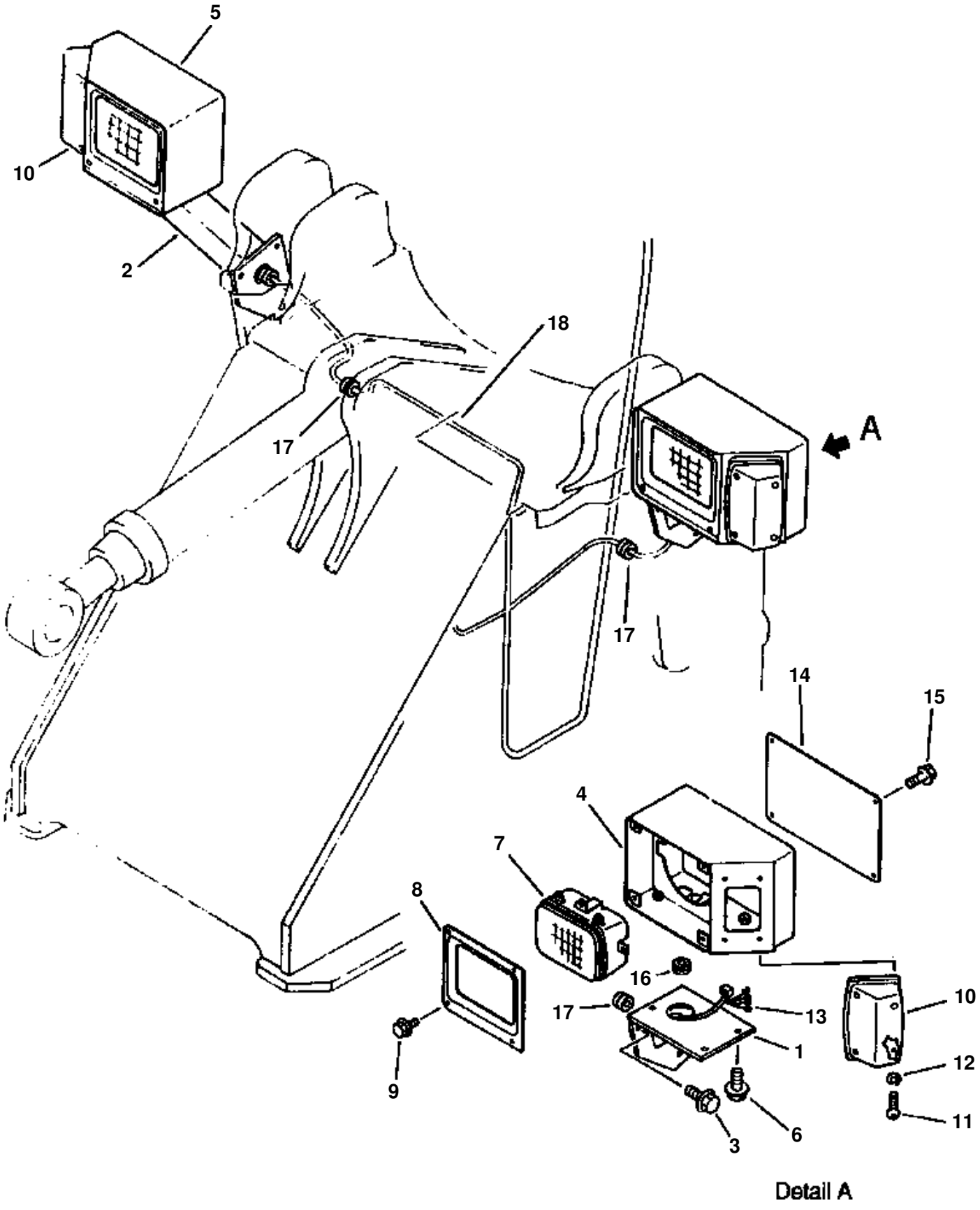

ELECTRICAL SYSTEM (FRONT LAMP)

ITEM NO.	PART NO.	DESCRIPTION	Q'TY
1	419-06-13192	SUPPORT - L.H	1
2	419-06-13212	SUPPORT - R.H	1
3	01435-01220	BOLT	6
4	419-06-13221	BRACKET - L.H	1
5	419-06-13231	BRACKET - R.H	1
6	01435-01225	BOLT	6
7		LAMP ASSEMBLY, HEAD (SEE PG 01-044)	
8	419-06-13250	COVER	2
9	01435-00610	BOLT	8
10		LIGHT ASSY., TURN SIGNAL & PARKING - L.H (SEE PG 01-046)	1
		LIGHT ASSY., TURN SIGNAL & PARKING - R.H (SEE PG 01-048)	1
11	01220-40516	BOLT	8
12	01601-20513	WASHER, SPRING	8
13	421-06-12360	WIRE ASSEMBLY	2
14	419-06-13241	COVER	2
15	01435-00610	BOLT	8
16	08037-03614	GROMMET	2
17	424-06-12910	GROMMET	4
18		WIRE ASSEMBLY (SEE PG 01-050)	

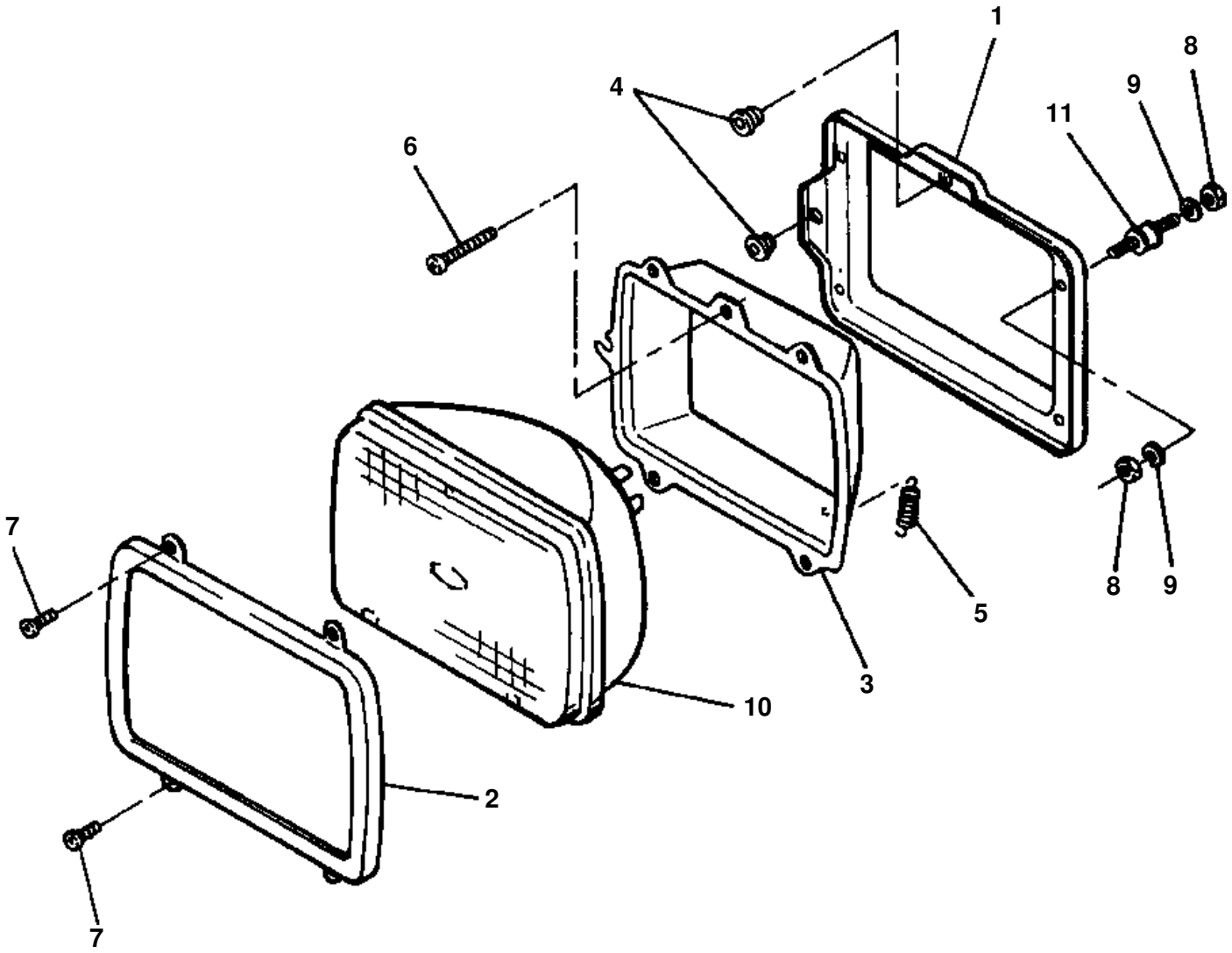
1
8
4
9
11
6
7
8
9
5
3
10
2
7

FRONT DRIVING LIGHT

ITEM NO.	PART NO.	DESCRIPTION	Q'TY
	421-06-13102	LIGHT ASSEMBLY, FRONT DRIVING	2
1	(NSS)	· HOUSING	1
2	(NSS)	· RING, RETAINING	1
3	(NSS)	· RING, MOUNTING	1
4	(NSS)	· GROMMET	2
5	(NSS)	· SPRING	1
6	(NSS)	· SCREW, ADJUSTING	2
7	(NSS)	· SCREW, MOUNTING	4
8	(NSS)	· NUT, MOUNTING	8
9	(NSS)	· WASHER, MOUNTING	8
10	421-06-13110	· BULB - 85/65W	1
11	421-06-13120	· CUSHION	4

FIG 08BHW450.002 L.H. TURN SIGNAL AND PARKING LIGHT

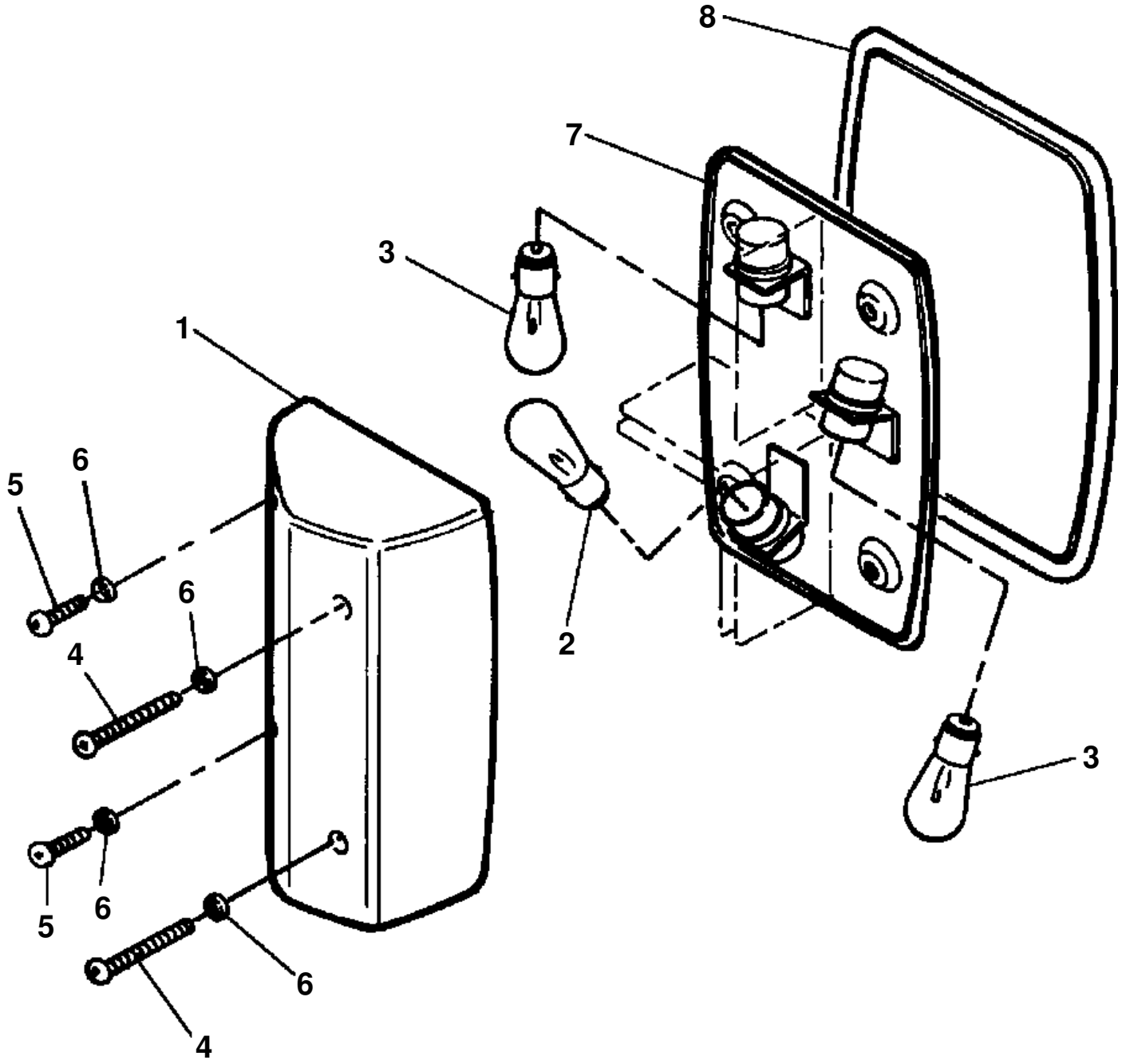

L.H. TURN SIGNAL AND PARKING LIGHT

ITEM NO.	PART NO.	DESCRIPTION	Q'TY
	421-06-13301	LIGHT ASSEMBLY, TURN SIGNAL AND PARKING	1
1	22W-06-12310	· LENS, LIGHT	1
2	421-06-13310	· BULB - 10/4W	1
3	08105-12420	· BULB - 25W	2
4	01220-50450	· SCREW, MOUNTING	2
5	01220-50416	· SCREW, MOUNTING	2
6	01641-40405	· WASHER, MOUNTING	4
7	(NSS)	· HOUSING	1
8	(NSS)	· SEAL	1

FIG 08BHW450.003 R.H. TURN SIGNAL AND PARKING LIGHT

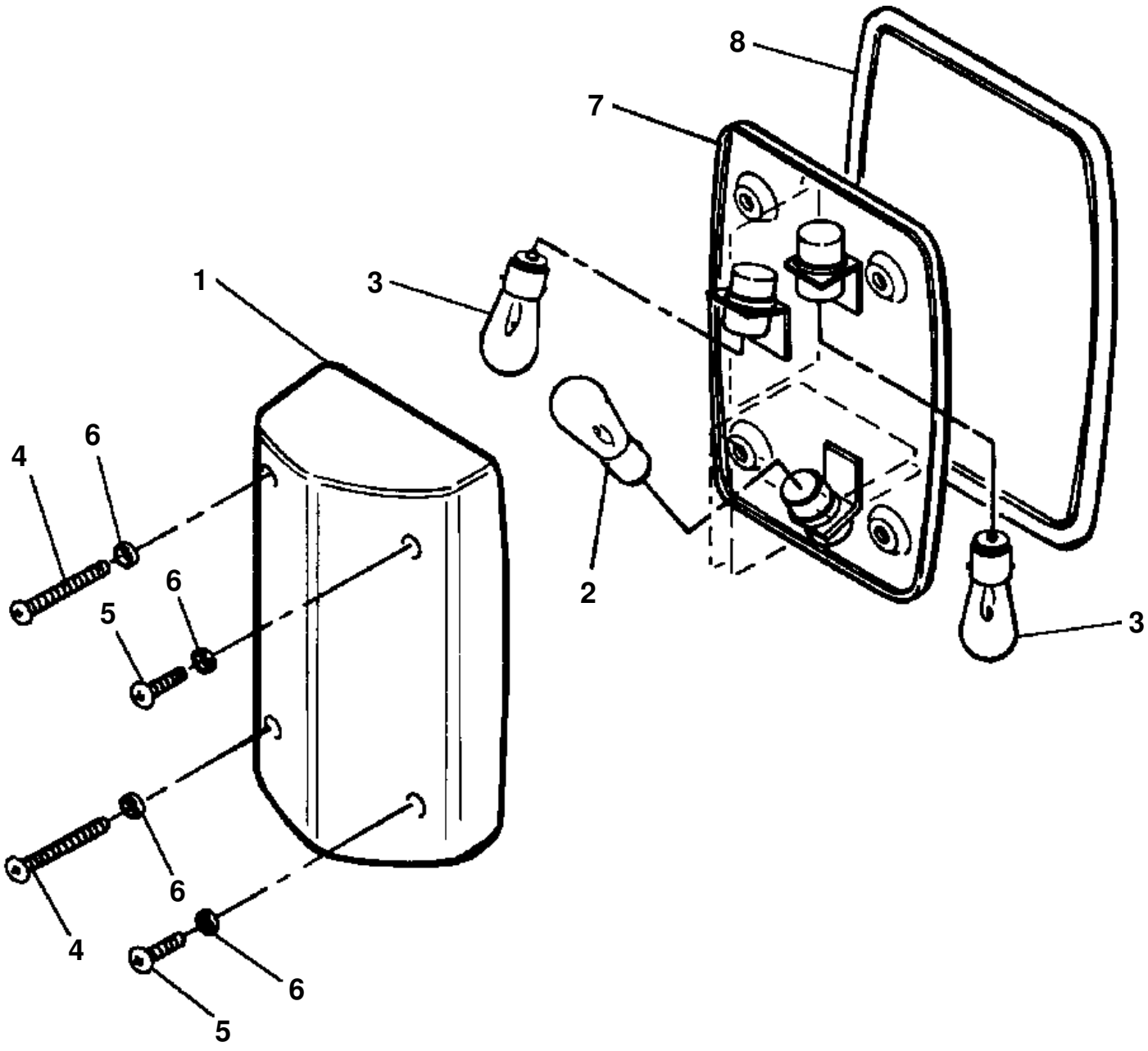

R.H. TURN SIGNAL AND PARKING LIGHT

ITEM NO.	PART NO.	DESCRIPTION	Q'TY
	421-06-13401	LIGHT ASSEMBLY, TURN SIGNAL AND PARKING	1
1	22W-06-12320	· LENS, LIGHT	1
2	421-06-13310	· BULB - 10/4W	1
3	08105-12420	· BULB - 25W	2
4	01220-50450	· SCREW, MOUNTING	2
5	01220-50416	· SCREW, MOUNTING	2
6	01641-40405	· WASHER, MOUNTING	4
7	(NSS)	· HOUSING	1
8	(NSS)	· SEAL	1

FIG 08ADW320.003 ELECTRICAL SYSTEM (FRONT LINE)

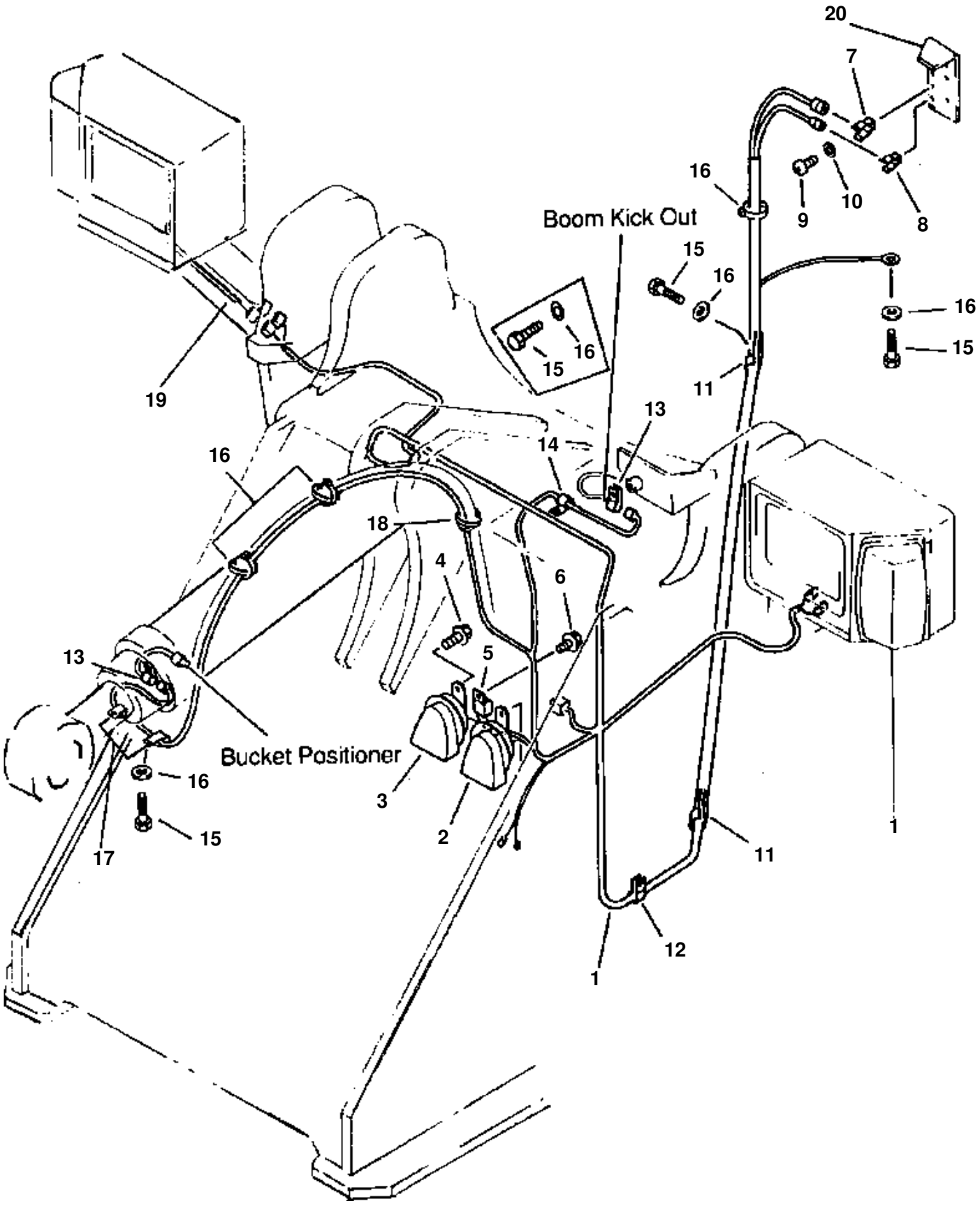

ELECTRICAL SYSTEM (FRONT LINE)

ITEM NO.	PART NO.	DESCRIPTION	Q'TY
1	419-06-12275	WIRE ASSEMBLY	1
N/I	08050-12300	· GROMMET	1
	08050-12200	· O-RING	1
	08050-12020	· BODY	1
	08050-04300	· GROMMET	1
	08050-04200	· O-RING	1
	08050-04010	· BODY	1
	08050-03810	· BODY ASS'Y	2
	08050-00600	· PLUG	2
	08050-00400	· TERMINAL	14
	08034-00414	· BAND	1
	08032-00106	· TERMINAL	2
	08031-10210	· TERMINAL	1
	08031-10108	· TERMINAL	1
	08027-11460	· CONNECTOR	2
	08027-11360	· CONNECTOR	2
	08027-02000	· TERMINAL	4
	08017-22209	· CONDUIT	1
	421-09-11650	· TERMINAL	2
	421-09-11420	· CONNECTOR	1
	421-06-11970	· DIODE	1
	287-06-16430	· CONNECTOR	1
2	419-06-11270	HORN - HIGH	1
3	419-06-11280	HORN - LOW	1
4	01435-00816	BOLT	2
5	287-06-16410	RELAY, HORN	1
6	01435-00612	BOLT	1
7	08052-02711	CLIP	1
8	08052-01911	CLIP	1
9	01220-40608	SCREW	5
10	01641-20608	WASHER	5
11	08052-12711	CLIP	2
12	08036-02514	CLIP	1
13	423-06-12640	CLIP	2
14	08036-10814	CLIP	1
15	01010-51016	BOLT	9
16	01643-31032	WASHER	9
17	08036-11214	CLIP	2
18	08034-00519	BAND	7
19		WIRE ASSEMBLY (SEE PG 01-042)	
20		PLATE (SEE PG 01-054)	

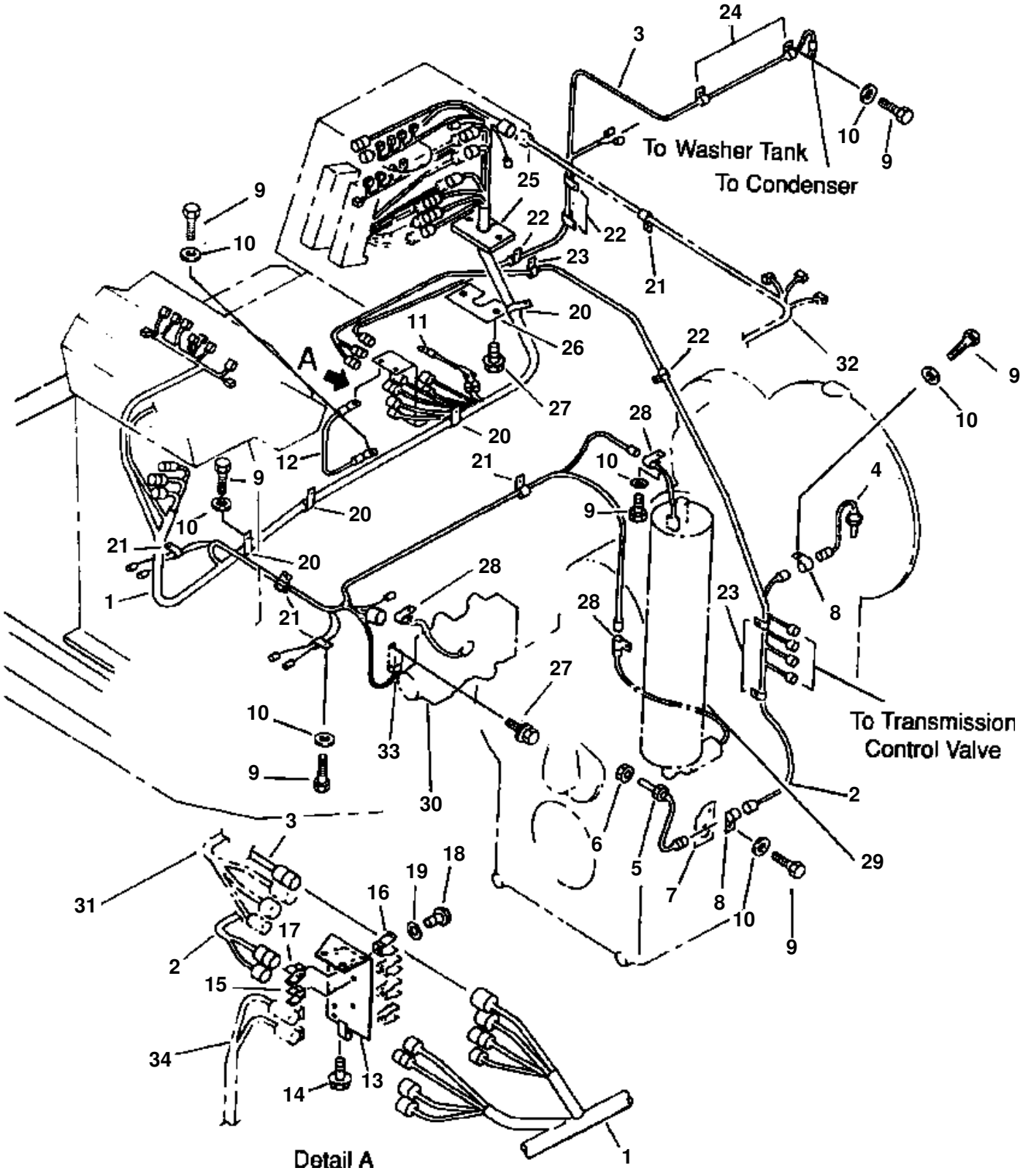
To Washer Tank
To Condenser
To Transmission Control Valve
Detail A
A

ELECTRICAL SYSTEM (MAIN LINE)

ITEM NO.	PART NO.	DESCRIPTION	Q'TY
1		WIRE ASSEMBLY (SEE FOLLOWING PAGES FOR HARNESS PARTS LIST N/I)	1
2		WIRE ASSEMBLY (SEE FOLLOWING PAGES FOR HARNESS PARTS LIST N/I)	1
3		WIRE ASSEMBLY (SEE FOLLOWING PAGES FOR HARNESS PARTS LIST N/I)	1
4		SENSOR, CONVERTER OIL TEMPERATURE (SEE PG 01-074)	
5		SENSOR, SPEED (SEE PG 01-074)	
6	01583-12213	NUT	1
7	419-06-12470	PLATE	1
8	423-06-12640	CLIP	2
9	01010-51016	BOLT	15
10	01643-31032	WASHER	15
11		WIRE ASSEMBLY (SEE FOLLOWING PAGES FOR HARNESS PARTS LIST N/I)	1
12	419-06-12450	WIRE	1
13	419-06-12213	PLATE	1
N/I	08036-41814	· CLIP	1
14	01435-01020	BOLT	2
15	08052-01911	CLIP	1
16	08052-02411	CLIP	4
17	08052-02411	CLIP	1
18	01220-40608	SCREW	8
19	01641-20608	WASHER	8
20	08036-03014	CLIP	4
21	08036-01814	CLIP	5
22	08036-11214	CLIP	7
23	08036-11210	CLIP	3
24	08036-01014	CLIP	2
25	419-06-12651	SEAT	1
26	418-944-1420	PLATE	1
27	01435-00612	BOLT	2
28	08052-11711	CLIP	3
29		ACCUMULATOR (SEE PG 03-050)	
30		VALVE, BRAKE (SEE PG 03-046)	
31	08034-00519	BAND	1
32	421-06-12581	WIRE ASSEMBLY	1
33	287-06-16410	RELAY	1
	287-06-16420	· BRACKET	1
34		WIRE ASSEMBLY (SEE PG 01-050)	
1	419-06-12971	WIRE ASSEMBLY	1
N/I	419-09-11380	· CONNECTOR	7
	419-09-11390	· CONNECTOR	3
	421-06-11970	· DIODE	13
	421-09-11420	· CONNRCTOR	17
	421-09-11620	· CONNECTOR	6
	421-09-11640	· CONNECTOR	2
	421-09-11650	· TERMINAL	58
	421-09-11660	· CONNECTOR	1
	421-06-11960	· RESISTOR	2
	424-06-12220	· BRACKET	1
	22X-06-16120	· CONNECTOR	1
	22X-06-16130	· CONNECTOR	1
	7861-02-9210	· CONNECTOR	1
	7861-02-9220	· CONNECTOR	2
	7861-02-9230	· CONNECTOR	1
	7861-02-9240	· CONNECTOR	2
	7861-02-9320	· PLATE	4
	7861-02-9330	· PLATE	2
	7861-02-9340	· PLATE	4
	7861-02-9410	· TERMINAL	50
	7827-10-1440	· TERMINAL	4
	08021-00400	· CONNECTOR	2
	08022-04001	· CONNECTOR	14
	08027-10660	· CONNECTOR	1
	08027-11260	· CONNECTOR	4
	08027-11360	· CONNECTOR	1
	08027-12000	· TERMINAL	51
	08031-10510	· TERMINAL	1
	08034-00519	· BAND	11

ELECTRICAL SYSTEM (MAIN LINE)

ITEM NO.	PART NO.	DESCRIPTION	Q'TY
N/I	08050-00400	· TERMINAL	19
	08050-00500	· TERMINAL	62
	08050-00600	· PLUG	15
	08050-02810	· CONNECTOR	3
	08050-03810	· CONNECTOR	1
	08050-04010	· CONNECTOR	1
	08050-04110	· CONNECTOR	1
	08050-04200	· O-RING	1
	08050-04300	· GROMMET	2
	08050-04710	· CONNECTOR	1
	08050-08010	· CONNECTOR	1
	08050-08110	· CONNECTOR	1
	08050-08200	· O-RING	1
	08050-08300	· GROMMET	2
	08050-08710	· CONNECTOR	2
	08050-08810	· CONNECTOR	1
	08050-12010	· CONNECTOR	1
	08050-12110	· CONNECTOR	4
	08050-12120	· CONNECTOR	1
	08050-12200	· O-RING	1
	08050-12300	· GROMMET	6
	08050-12710	· CONNECTOR	2
	421-06-19410	· CABLE	1
2	419-06-12860	WIRE ASSEMBLY	1
N/I	08050-08010	· CONNECTOR	1
	08050-08300	· GROMMET	1
	08050-00600	· PLUG	1
	08050-08200	· O-RING	1
	08050-04810	· CONNECTOR	1
	421-06-11970	· DIODE	7
	421-09-11420	· CONNECTOR	7
	421-09-11650	· TERMINAL	14
	08050-00400	· TERMINAL	7
	08050-02810	· CONNECTOR	6
	08034-00519	· BAND	4
	08024-01910	· TAPE	1
3	419-06-12333	WIRE ASSEMBLY	1
N/I	421-06-11970	· DIODE	1
	421-09-11420	· CONNECTOR	1
	421-09-11650	· TERMINAL	2
	08027-11260	· CONNECTOR	2
	08034-00519	· BAND	1
	08050-08110	· BODY	1
	08050-08300	· GROMMET	1
	08050-00500	· TERMINAL	5
	08050-00600	· PLUG	3
11	424-06-12811	WIRE ASSEMBLY	1
N/I	08021-00400	· CONNECTOR	2
	08031-10210	· TERMINAL	1

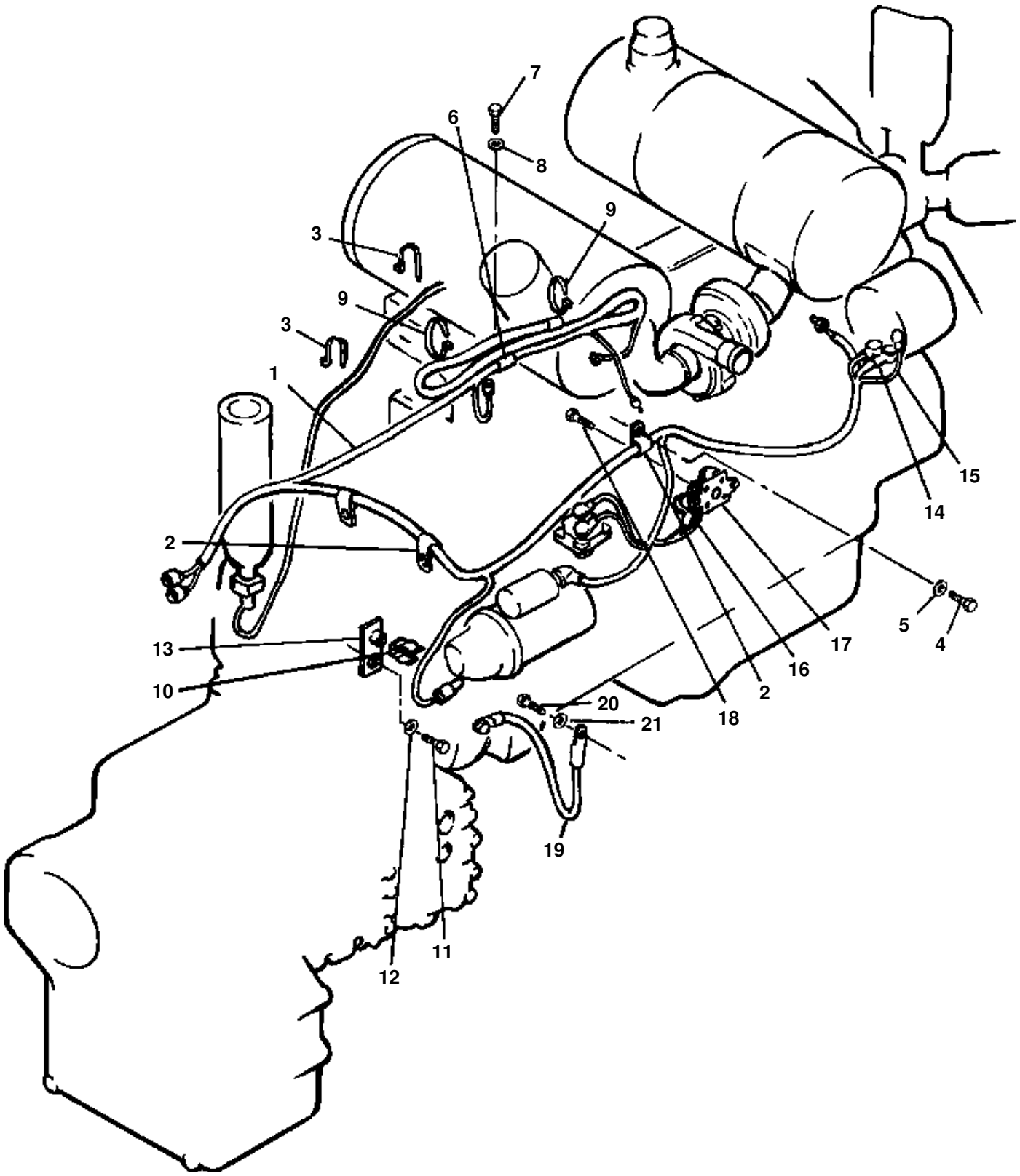
7
6
8
9
3
9
3
1
15
14
2
5
4
17
16
2
18
13
10
20
21
19
12
11

ELECTRICAL SYSTEM (ENGINE SENSOR)

ITEM NO.	PART NO.	DESCRIPTION	Q'TY
1	423-06-12221	WIRE ASSEMBLY	1
N/I	08050-00500	TERMINAL	10
	08050-12300	GROMMET	1
	08050-12110	CONNECTOR	1
	08050-03810	CONNECTOR	1
	08050-00600	PLUG	2
	08034-00414	BAND	2
	08031-11506	TERMINAL	2
	08031-10510	TERMINAL	1
	08031-10506	TERMINAL	1
	08031-10204	TERMINAL	1
	08031-10210	TERMINAL	1
	08026-01910	TAPE	A/R
	423-06-11730	CONNECTOR	1
	423-06-11720	CONNECTOR	1
	421-09-11650	TERMINAL	6
	421-09-11420	CONNECTOR	3
	421-06-11970	DIODE	3
	418-06-11340	TERMINAL	4
	418-06-11330	CONNECTOR	1
	418-06-11320	CONNECTOR	1
	418-06-11310	CONNECTOR	1
2	08036-01814	CLIP	3
3	08034-00519	BAND	3
4	01010-50816	BOLT	1
5	01643-30823	WASHER	1
6	08036-01414	CLIP	1
7	01010-51016	BOLT	1
8	01643-31032	WASHER	1
9	08034-00823	BAND	3
10	08052-01711	CLIP	1
11	01220-40608	SCREW	1
12	01641-20608	WASHER	1
13	421-06-12670	BRACKET	1
14	08038-02027	CAP	1
15	08038-00525	CAP	1
N/I	423-06-12270	WIRE	1
	423-06-12280	WIRE	1
16	08038-02027	CAP	4
17	421-06-11440	BREAKER, MAIN	1
18	01435-00616	BOLT	2
19	419-06-12460	WIRE	1
N/I	08030-0012	· TERMINAL	2
20	01010-51016	BOLT	1
21	01643-31032	WASHER	1

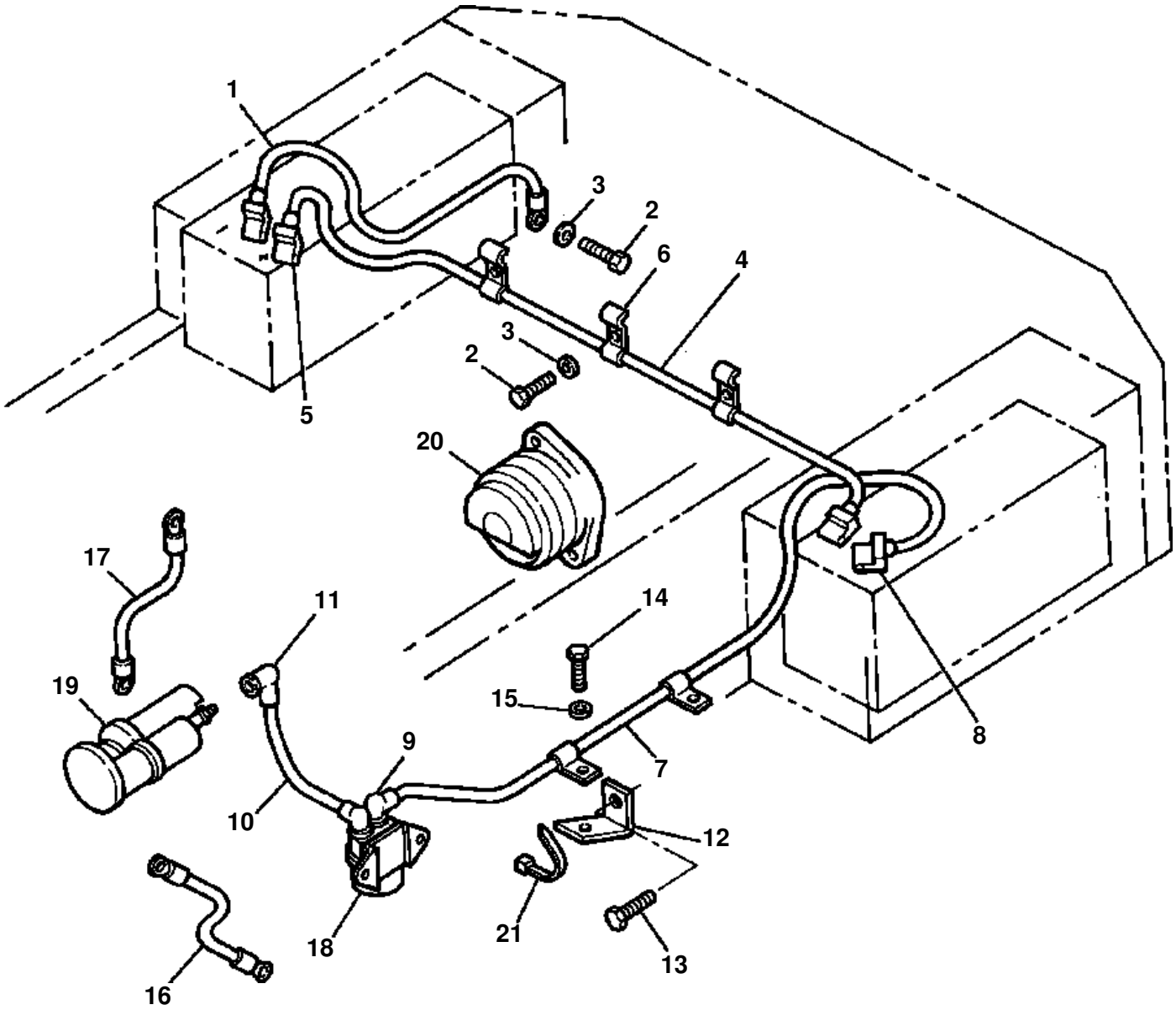
1
3
2
6
4
3
2
5
20
17
11
14
19
15
9
7
8
10
12
18
21
13
16

BATTERY CABLES

ITEM NO.	PART NO.	DESCRIPTION	Q'TY
1	419-06-12560	WIRE ASSEMBLY (BATTERY TO GRD.)	1
N/I	08030-00010	· TERMINAL	2
2	01010-51016	BOLT	7
3	01643-31032	WASHER	7
4	419-06-12420	WIRE ASSEMBLY (BATTERY TO BATTERY)	1
N/I	08030-00010	· TERMINAL	2
5	08038-22511	CAP	2
6	08036-01814	CLIP	5
7	419-06-12440	WIRE ASSEMBLY (BATTERY TO RELAY)	1
N/I	08030-00010	· TERMINAL	2
8	08038-22511	CAP	1
9	08038-00035	CAP	1
10	423-06-12260	WIRE ASSEMBLY (RELAY TO STARTER)	1
N/I	08030-00010	· TERMINAL	1
	08030-00012	· TERMINAL	1
11	08038-00035	CAP	2
12	419-16-11130	BRACKET	1
N/I	01580-01008	· NUT	1
13	01435-01030	BOLT	1
14	01010-51025	BOLT	1
15	01643-31032	WASHER	1
16	419-06-12460	WIRE ASSEMBLY (BONDING WIRE - STARTER TO BODY)	1
N/I	08030-00012	· TERMINAL	2
17	419-06-12450	WIRE ASSEMBLY (STARTER TO GRD.)	1
N/I	08030-00010	· TERMINAL	2
18	421-06-11930	BATTERY RELAY	1
19	1243 026 H92	STARTER MOTOR	1
20	1243 060 H91	ALTERNATOR	1
21	08034-00519	BAND	A/R

FIG 08ADW320.006 ELECTRICAL SYSTEM (REAR LAMP)

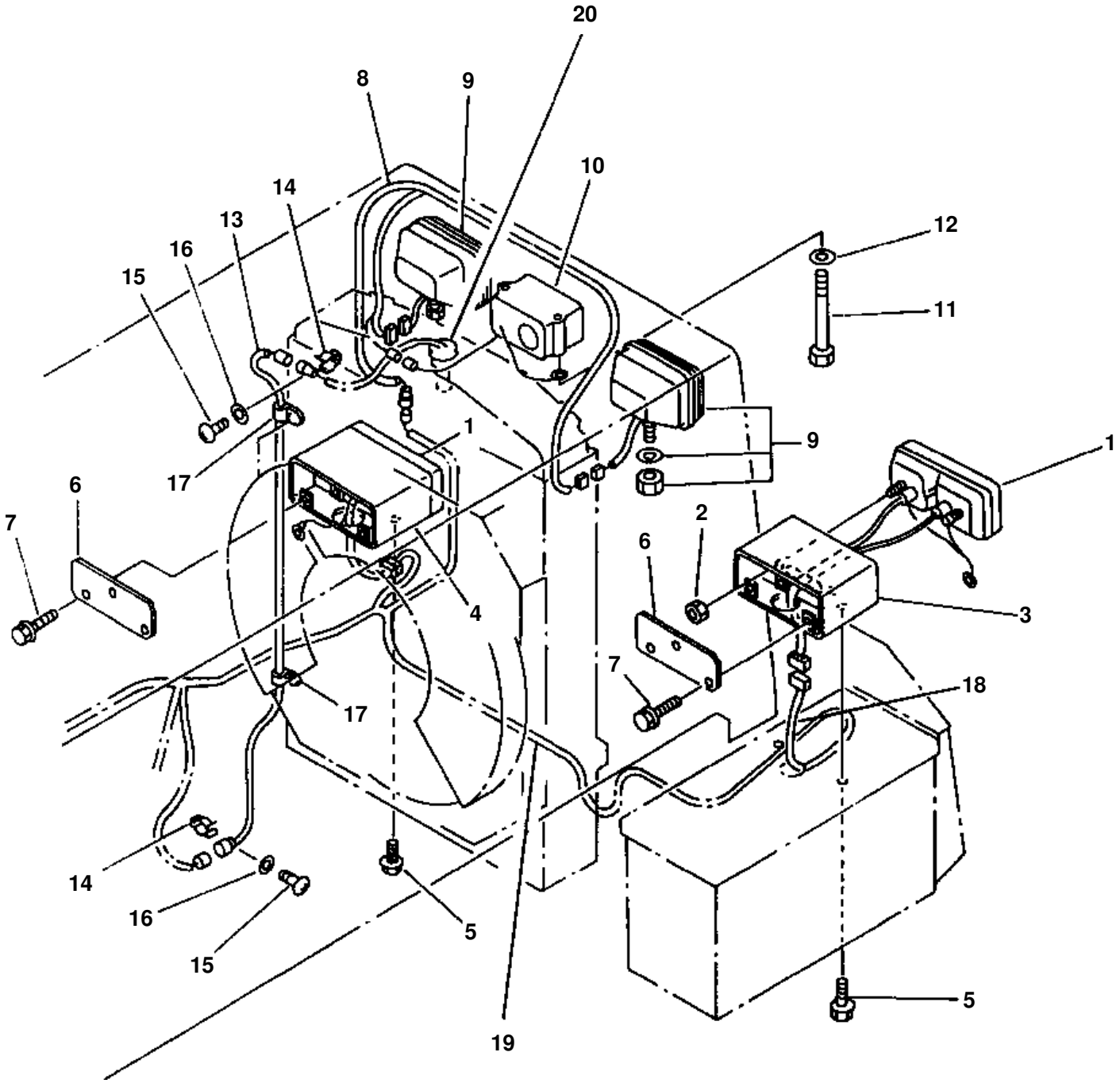

ELECTRICAL SYSTEM (REAR LAMP)

ITEM NO.	PART NO.	DESCRIPTION	Q'TY
1		LAMP, COMBINATION - REAR (SEE PG 01-070)	
2	01584-00605	NUT	4
3	419-06-13581	BRACKET - L.H	1
4	419-06-13591	BRACKET - R.H	1
5	01435-00816	BOLT	4
6	419-06-13490	PLATE	2
7	01435-00616	BOLT	6
8	419-06-12342	WIRE ASSEMBLY	1
N/I	08050-03810	· CONNECTOR	1
	08031-10210	· TERMINAL	1
	08027-11260	· CONNECTOR	2
	08022-04001	· CONNECTOR	1
9	417-06-13910	LAMP ASSEMBLY, REAR WORK	2
	22W-06-12170	· BULB - 70W	1
10	08164-00000	ALARM, BACK-UP	1
11	6132-11-6460	BOLT	2
12	01643-30823	WASHER	2
13	424-06-12122	WIRE ASSEMBLY	1
N/I	08050-00500	· TERMINAL	2
	08050-02110	· CONNECTOR	1
	08050-00400	· TERMINAL	2
	08050-02010	· CONNECTOR	1
	08050-02200	· O-RING	1
14	08052-01711	CLIP	2
15	01220-40608	SCREW	2
16	01641-20608	WASHER	2
17	08036-10814	CLIP	4
18	419-06-12910	HARNESS, WIRING - REAR LAMP	2
N/I	421-06-11970	· DIODE	4
	421-09-11420	· CONNECTOR	2
	421-09-11650	· TERMINAL	4
	08027-00610	· CONNECTOR	1
	08027-01000	· TERMINAL	5
	08027-11360	· CONNECTOR	1
	08031-10106	· TERMINAL	1
	08034-00519	· BAND	2
19		HARNESS, MAIN WIRING (SEE PG 01-064)	
20		SENSOR, RADIATOR WATER LEVEL (SEE PG 01-074)	

FIG 08BHW320.001 REAR COMBINATION LIGHT

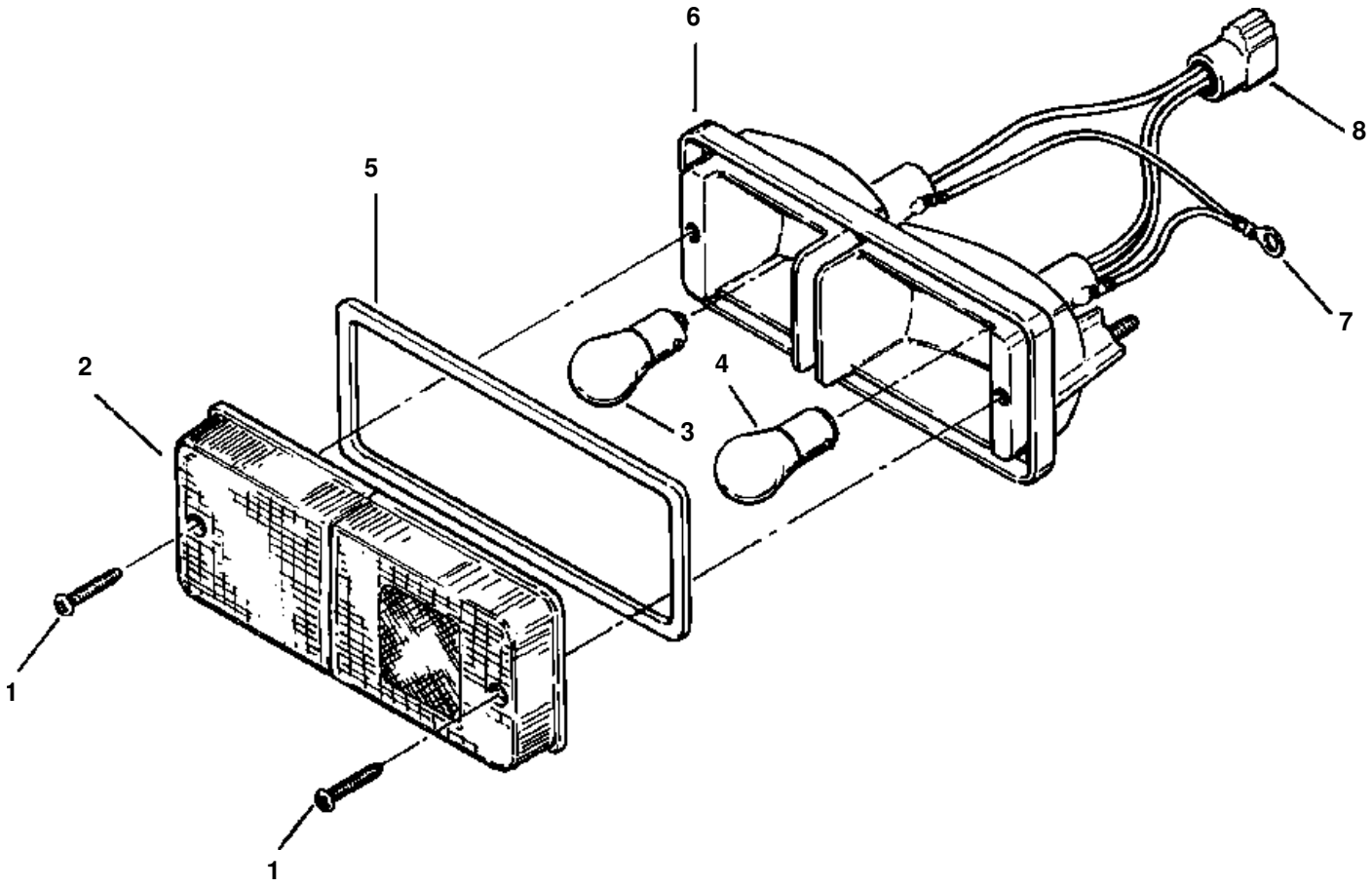

REAR COMBINATION LIGHT

ITEM NO.	PART NO.	DESCRIPTION	Q'TY
	417-06-13510	LAMP, COMBINATION - REAR	2
1	(NSS)	· SCREW	2
2	417-06-13520	· LENS	1
3	08105-12420	· BULB - 25W	1
4	08104-12420	· BULB - 25/10W	1
5	(NSS)	· GASKET	1
6	(NSS)	· HOUSING	1
7	08031-10106	· TERMINAL	1
8	08027-11310	· CONNECTOR	1

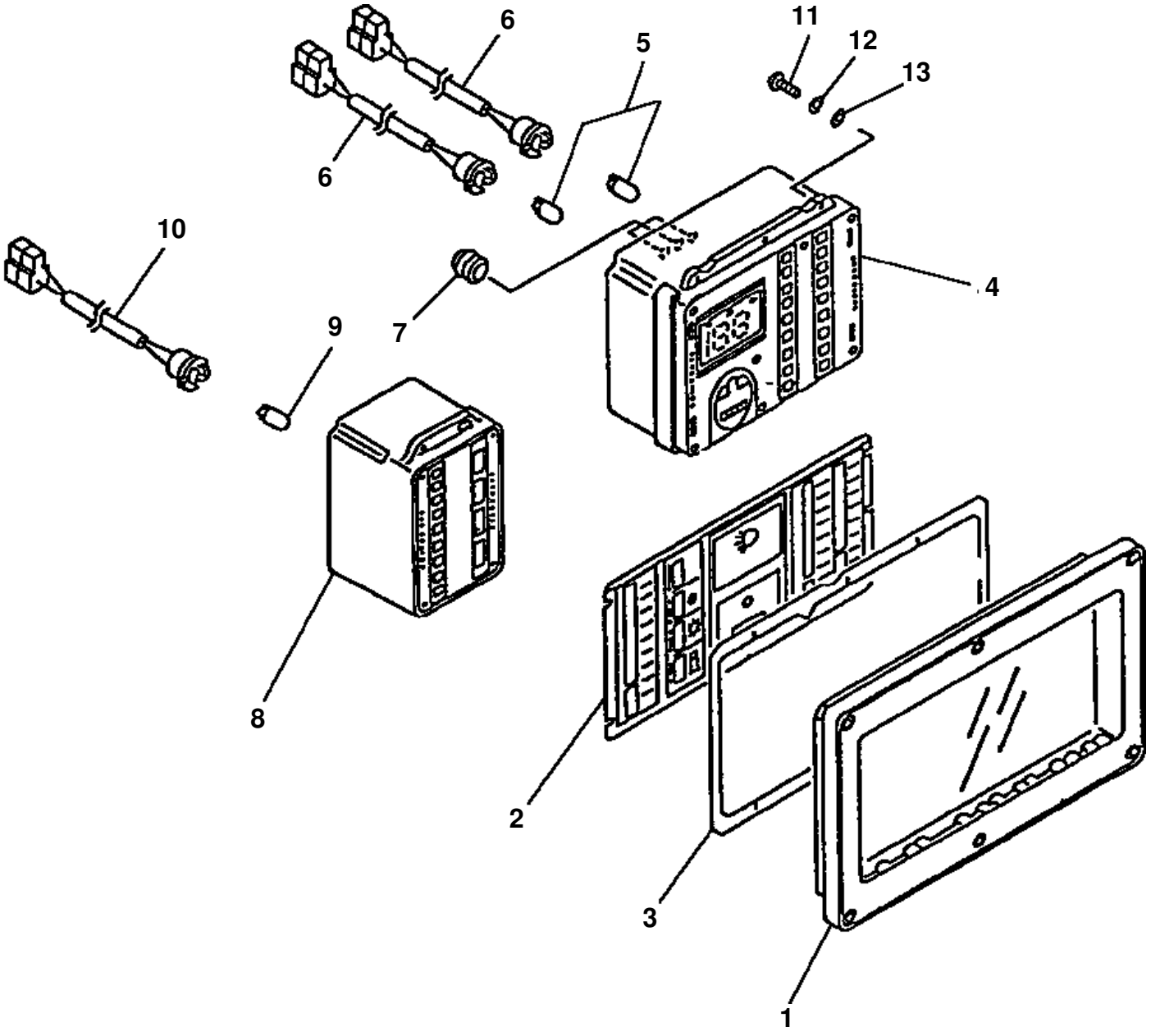
6
6
5
11
12
13
10
7
4
9
8
2
3
1

MONITOR PANEL

ITEM NO.	PART NO.	DESCRIPTION	Q'TY
	7831-56-2000	MONITOR ASSEMBLY	1
1	7831-51-3000	· PANEL	1
2	7831-51-4000	· PLATE	1
3	7831-51-1910	· GASKET	1
4	7831-51-5000	· MODULE, SPEEDOMETER & MONITOR	1
5	08102-12403	· · BULB - 3W	2
6	7831-61-9110	· · HOLDER	2
7	7861-51-1630	· · GROMMET	3
8	7831-51-6001	· MODULE, MONITOR & GAUGE	1
9	7831-11-9120	· · BULB - 3W	1
10	7831-61-9110	· · HOLDER	1
11	7861-86-1330	· SCREW	10
12	01601-00410	· WASHER, SPRING	10
13	01641-00405	· WASHER	10

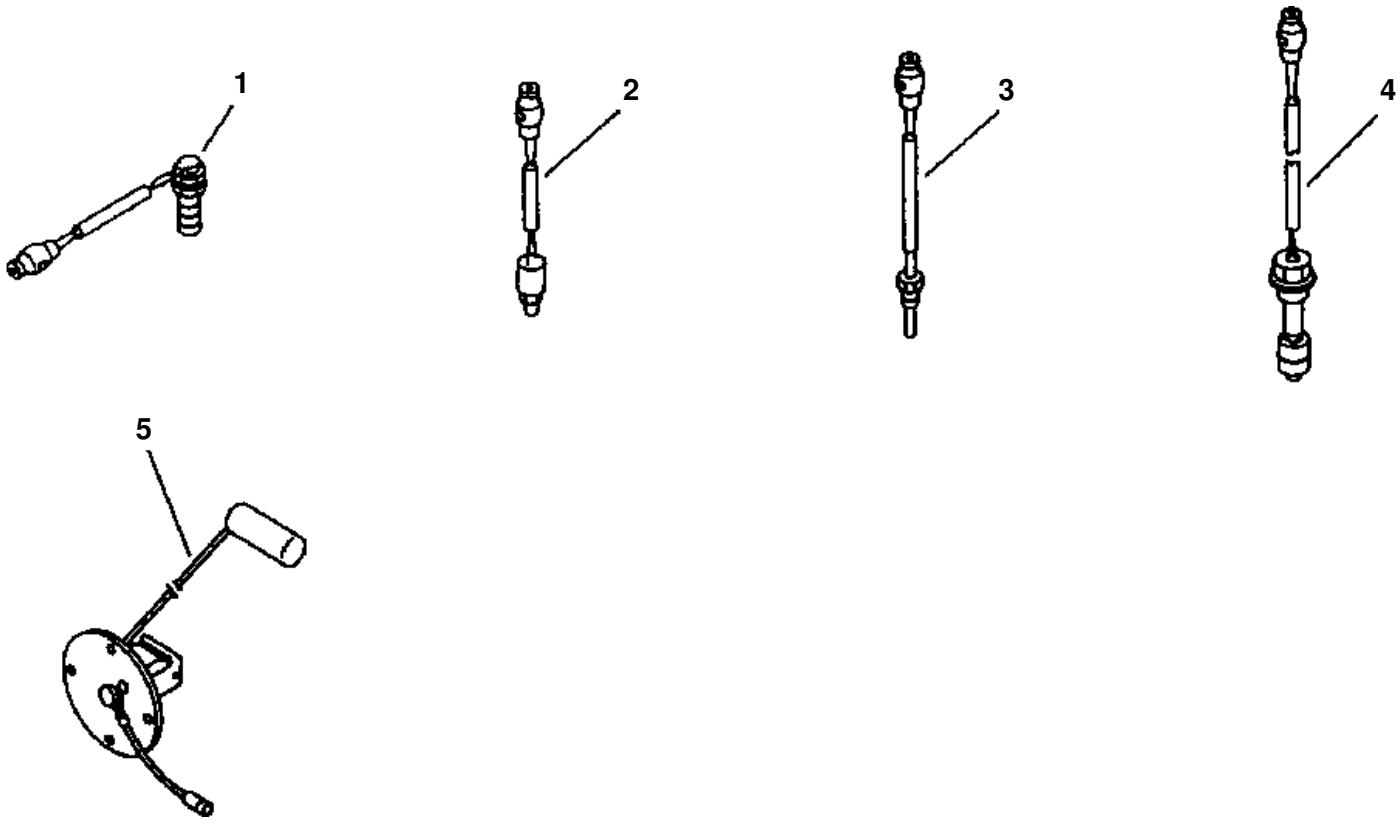
1
2
3
4
5

SENSORS

ITEM NO.	PART NO.	DESCRIPTION	Q'TY
1	7819-11-2310	SENSOR, SPEED	1
N/I	7816-11-4790	· TERMINAL	1
	7816-11-4780	· O-RING	1
	7861-01-3170	· CAP	1
	7826-01-1550	· GROMMET	1
2	206-01-A1130	SENSOR, WATER TEMPERATURE	1
3	7861-91-4540	SENSOR, RADIATOR WATER LEVEL	1
N/I	07002-23634	· O-RING	1
4	7861-91-3330	SENSOR, CONVERTER OIL TEMPERATURE	1
5	206-01-A1140	SENSOR, FUEL LEVEL ASSY	1
N/I	206-01-A1160	· SENSOR,FLUID LEVEL	1
	1209-470-H1	· CONNECTOR	1
	1209-477-H1	· SEAL	4
	1209-466-H1	· CONNECTOR	4

TORQUE CONVERTER AND TRANSMISSION

DESCRIPTION
TORQUE CONVERTER
TRANSMISSION ASSEMBLY
TORQUE CONVERTER CASE
TRANSMISSION REAR CASE
FORWARD CLUTCH
REVERSE CLUTCH
THIRD CLUTCH
FIRST CLUTCH
FOURTH CLUTCH
SECOND CLUTCH
OUTPUT SHAFT
TRANSMISSION CONTROL VALVE UPPER ASSEMBLY
TRANSMISSION CONTROL VALVE LOWER ASSEMBLY
TRANSMISSION CONTROL VALVE SOLENOID ASSEMBLY
TRANSMISSION & TORQUE CONVERTER CHARGING PUMP
FRONT CHARGING PUMP
REAR CHARGING PUMP
TRANSMISSION PIPING
TRANSMISSION OIL FILTER
TRANSMISSION OIL COOLER PIPING

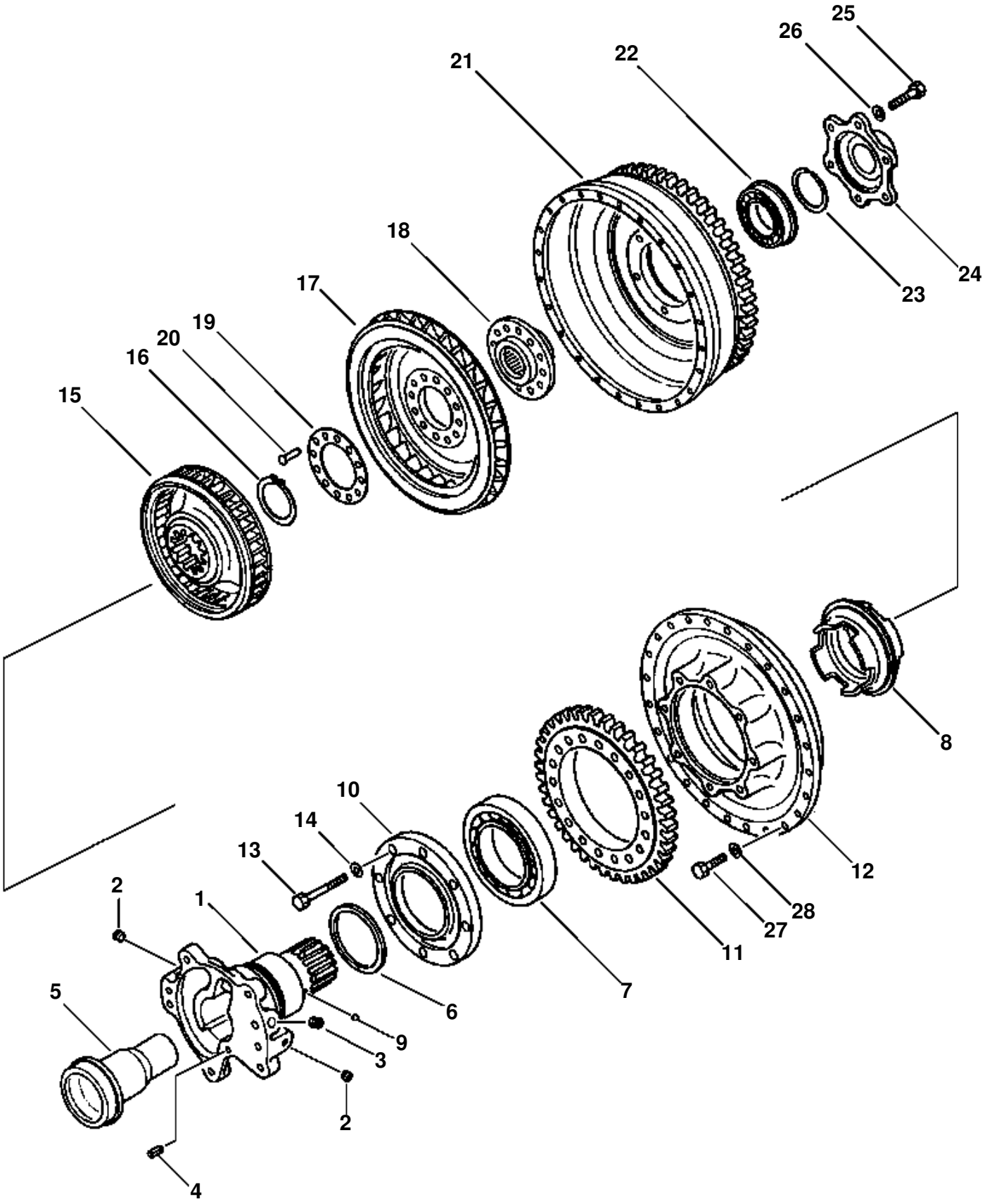
25
26
22
21
24
23
18
17
19
20
16
15
8
12
28
27
11
10
14
13
2
1
7
6
5
9
3
2
4

TORQUE CONVERTER

ITEM NO.	PART NO.	DESCRIPTION	Q'TY
		TRANSMISSION (SEE PG 02-004)	
	711-52-11000	· CONVERTER, TORQUE	1
1	711-55-12520	· · SHAFT	1
2	07043-00211	· · PLUG	2
3	07043-00312	· · PLUB	1
4	04025-00612	· · PIN, SPRING	1
5	711-52-12530	· · SLEEVE	1
6	07018-31004	· · RING, SEAL	1
7	06040-06217	· · BEARING	1
8	711-57-11190	· · GUIDE	1
9	04260-00952	· · BALL	1
10	711-52-11140	· · RETAINER	1
11	711-52-11340	· · GEAR	1
12	711-52-11120	· · PUMP	1
13	01010-61055	· · BOLT	8
14	01643-31032	· · WASHER	8
15	711-52-12110	· · STATOR	1
16	04064-07025	· · RING, SNAP	1
	711-52-11510	· · TURBINE ASSEMBLY	1
17	(NSS)	· · · TURBINE	1
18	(NSS)	· · · BOSS	1
19	(NSS)	· · · PLATE	1
20	(NSS)	· · · RIVET	12
21	711-52-11210	· · CASE	1
22	06043-06011	· · BEARING	1
23	711-01-11570	· · RING, SNAP	1
24	711-52-11250	· · PILOT	1
25	01010-61025	· · BOLT	6
26	01643-31032	· · WASHER	6
27	01010-60825	· · BOLT	24
28	01643-30823	· · WASHER	24

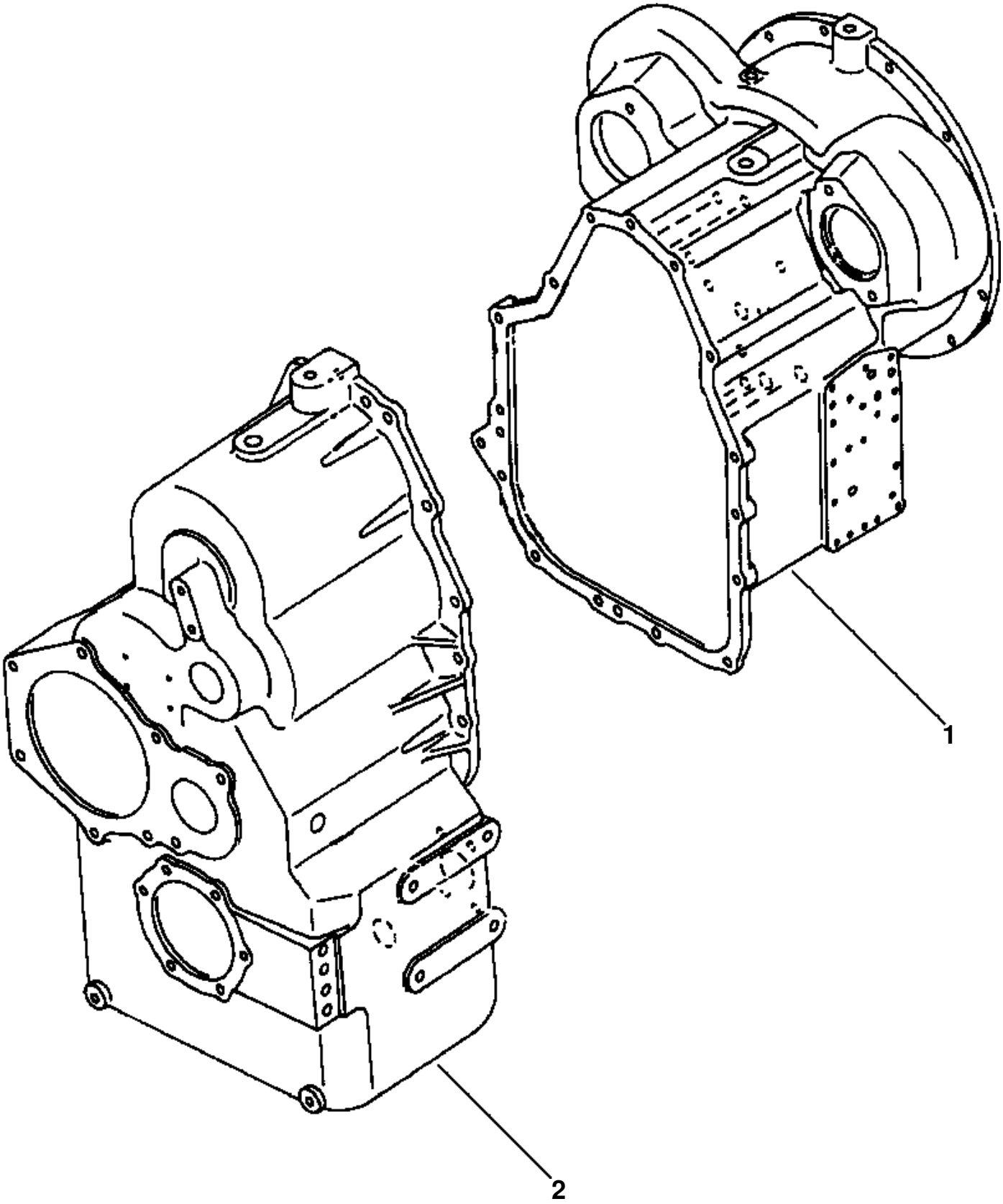
1
2

TRANSMISSION ASSEMBLY

ITEM NO.	PART NO.	DESCRIPTION	Q'TY	REF
	419-15-11051	TRANSMISSION ASSEMBLY	1	F1
1	419-15-18030	・ CASE ASSEMBLY, TORQUE CONVERTER - AND RELATED PARTS (SEE PG 07-006)		
2	419-15-18014	・ CASE ASSEMBLY, REAR - AND RELATED PARTS (SEE PG 07-008)		
		F1 - FOR MOUNTING HARDWARE, SEE PG 01-003.		

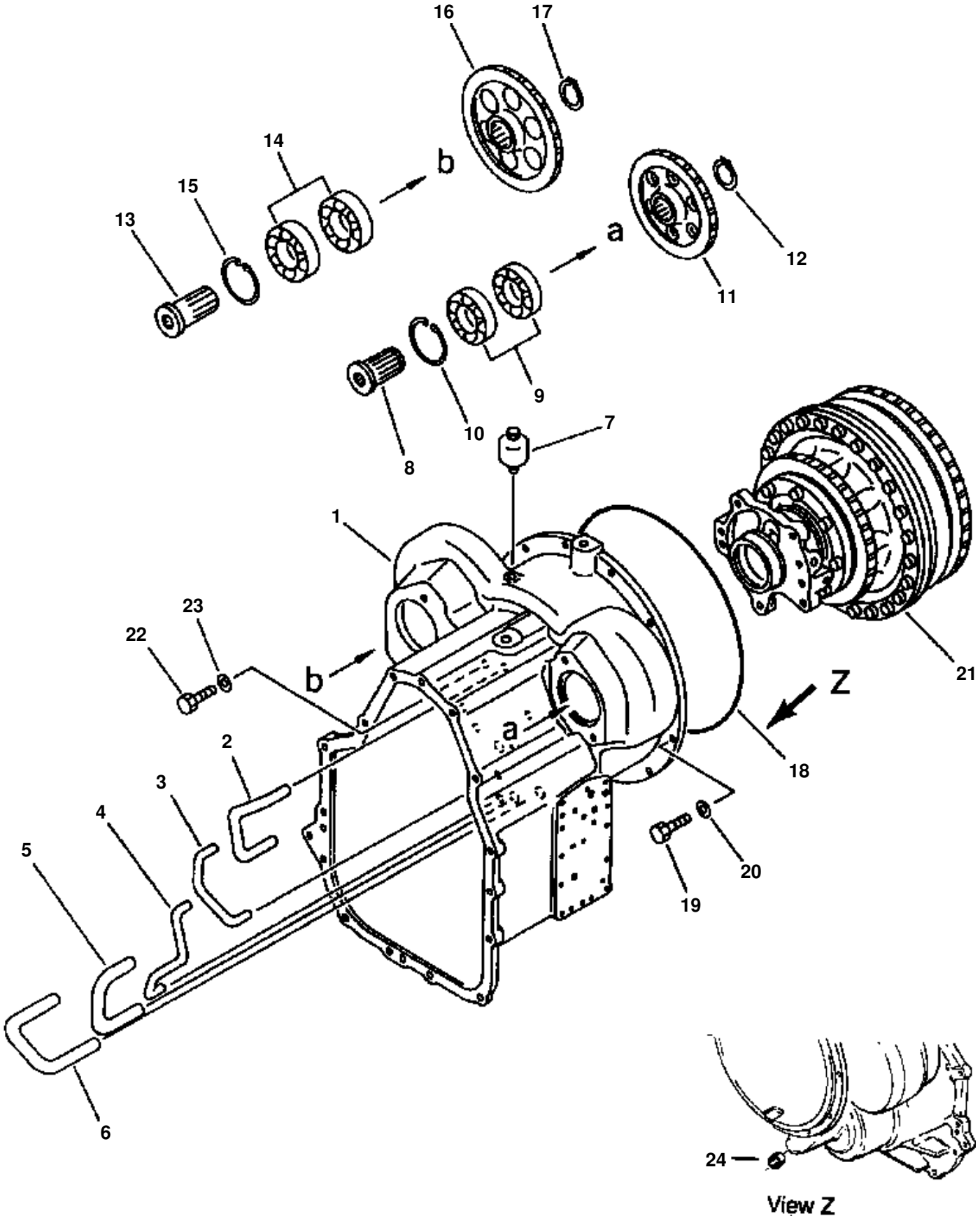
16
17
14
b
15
13
a
12
11
9
10
8
7
1
23
22
b
21
Z
a
2
18
3
4
5
20
19
6
24
View Z

TORQUE CONVERTER CASE

ITEM NO.	PART NO.	DESCRIPTION	Q'TY
		TRANSMISSION ASSEMBLY (SEE PG 02-004)	
	419-15-18030	・CASE ASSEMBLY, CONVERTER	1
1	(NSS)	・・CASE	1
2	(NSS)	・・TUBE	1
3	(NSS)	・・TUBE	1
4	(NSS)	・・TUBE	1
5	(NSS)	・・TUBE	1
6	(NSS)	・・TUBE	1
7	07030-00252	・BREATHER	1
8	419-15-14140	・SHAFT	1
9	07030-06209	・BEARING	2
10	04065-08530	・RING, SNAP	1
11	419-15-14150	・GEAR	1
12	04064-04518	・RING, SNAP	1
13	419-15-14171	・SHAFT	1
14	419-15-14181	・BEARING	1
15	04065-01204	・RING, SNAP	1
16	419-15-14160	・GEAR	1
17	04064-06525	・RING, SNAP	1
18	424-13-11110	・O-RING	1
19	01010-31030	・BOLT	12
20	01643-31032	・WASHER	12
21		・CONVERTER, TORQUE (SEE PG 02-002)	
22	01010-31235	・BOLT	5
23	01643-31232	・WASHER	5
24	007042-71019	・PLUG	1

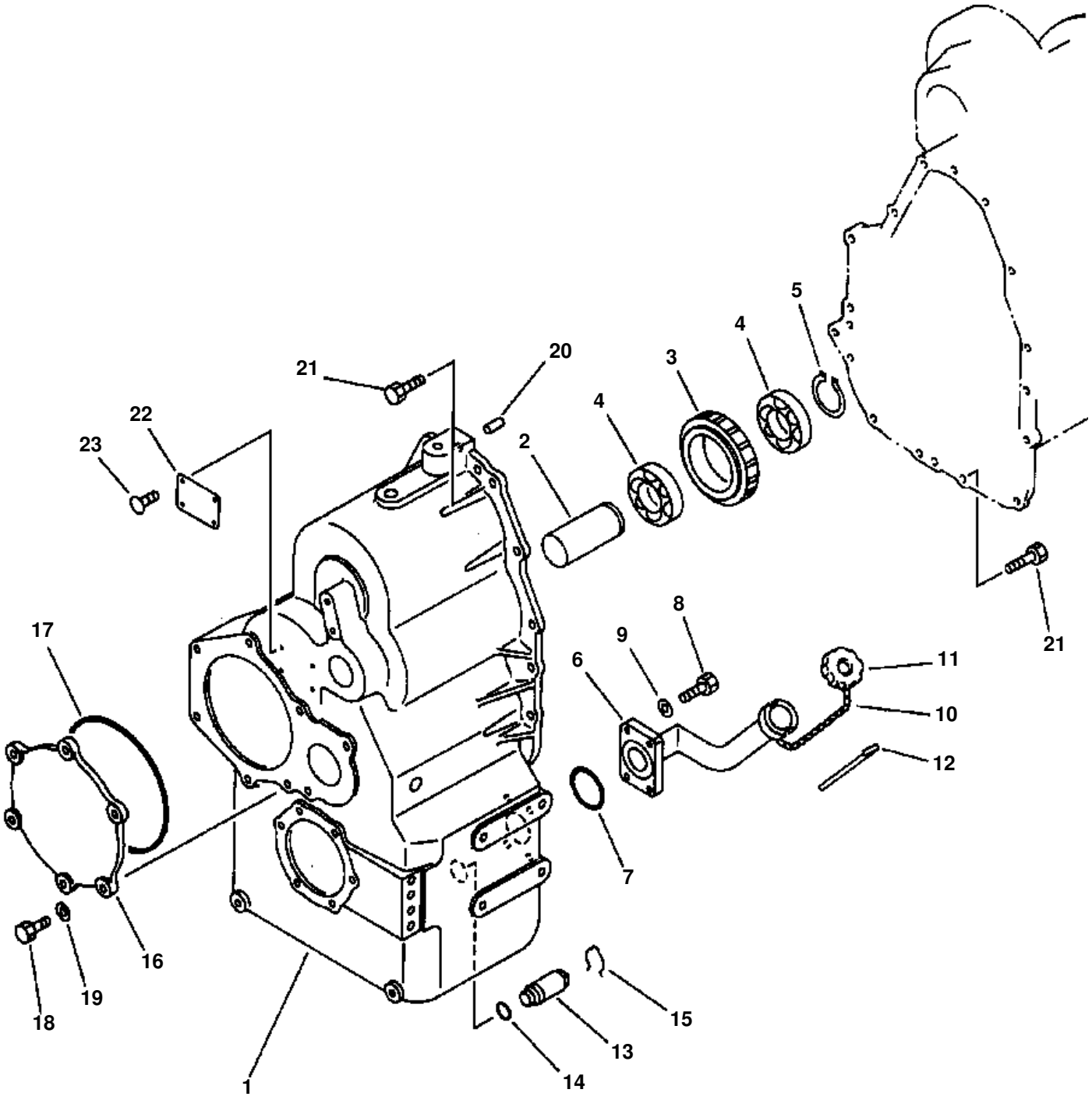
1
2
3
4
4
5
6
7
8
9
10
11
12
13
14
15
16
17
18
19
20
21
21
22
23

TRANSMISSION REAR CASE

ITEM NO.	PART NO.	DESCRIPTION	Q'TY
		TRANSMISSION ASSEMBLY (SEE PG 02-004)	
	419-15-18014	・ CASE ASSEMBLY, REAR	1
1	(NSS)	・・ CASE	1
2	(NSS)	・・ SHAFT, IDLER	1
3	419-15-12821	・ GEAR, IDLER	1
4	06033-06212	・ BEARING	2
5	04064-06020	・ RING, SNAP	1
6	419-15-14412	・ TUBE, FILLER	1
7	07000-02065	・ O-RING	1
8	01010-31040	・ BOLT	4
9	01643-31032	・ WASHER	4
10	6136-21-7190	・ CHAIN	1
11	6136-21-7120	・ CAP	1
12	419-15-14424	・ GAUGE	1
13	419-15-18240	・ PLUG	1
14	07002-02434	・ O-RING	1
15	419-15-18251	・ RING, SNAP	1
16	419-15-18260	・ COVER	1
17	07000-05220	・ O-RING	1
18	01010-31235	・ BOLT	6
19	01643-31232	・ WASHER	6
20	04020-01434	・ PIN, DOWEL	2
21	01010-31235	・ BOLT	12
22	22X-22-13171	・ PLATE, NAME (LIMITED SUPPLY)	1
23	04418-03060	・ SCREW	4
	419-15-18131	・ GASKET, LIQUID	1

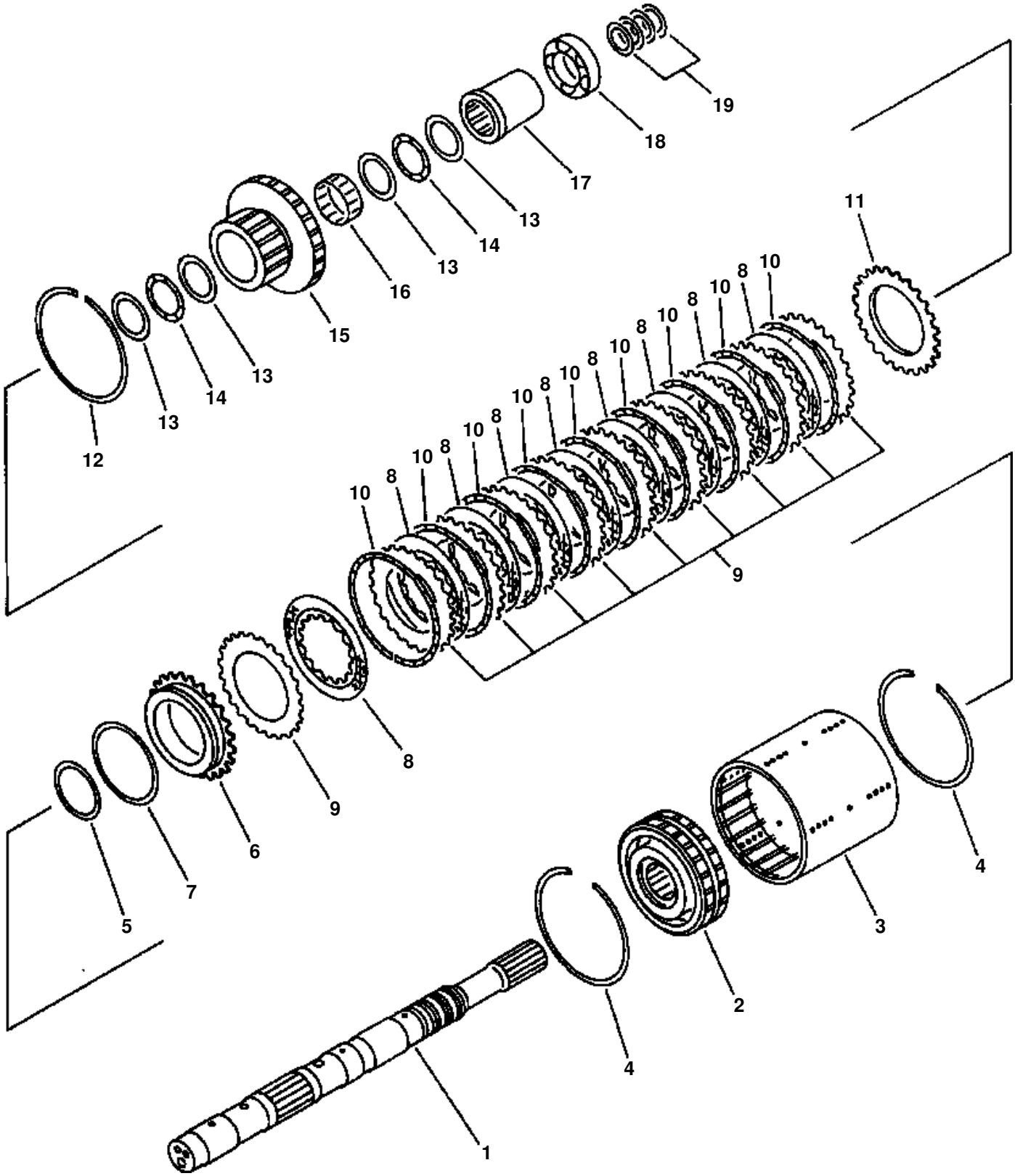
19
18
17
13
14
13
16
15
13
14
13
12
11
10
8
10
8
10
8
10
8
10
8
10
8
10
8
9
8
9
6
7
5
4
3
2
4
1

FORWARD CLUTCH

ITEM NO.	PART NO.	DESCRIPTION	Q'TY	REF
		TRANSMISSION (SEE PG 02-004)		
	419-15-12002	· CLUTCH ASSEMBLY, FORWARD & REVERSE	1	F1
	419-15-12014	· · SHAFT ASSEMBLY	1	
1	(NSS)	· · · SHAFT	1	
2	(NSS)	· · · CYLINDER	1	
3	419-15-12321	· · HOUSING	1	
4	419-15-12140	· · RING	2	
5	419-15-12210	· · RING	1	
6	419-15-12221	· · PISTON	1	
7	419-15-12190	· · RING, SEAL	1	
8	419-15-12290	· · DISC	10	
9	419-15-12310	· · PLATE, SEPARATE	11	
10	419-15-12133	· · SPRING, WAVE	10	
11	419-15-12280	· · PLATE, END	1	
12	419-15-12140	· · RING, SNAP	1	
13	419-15-12240	· · WASHER, THRUST	4	
14	419-15-12250	· · BEARING, THRUST	2	
15	419-15-12152	· · GEAR, FORWARD	1	
16	419-15-12270	· · BEARING, NEEDLE	1	
17	419-15-12181	· · COLLAR	1	
18	06030-06210	· · BEARING	1	
19	419-15-12121	· RING, SEAL	4	
		F1 - INCLUDES PARTS LISTED ON PG 02-013		

FIG 07CZW320.002 REVERSE CLUTCH

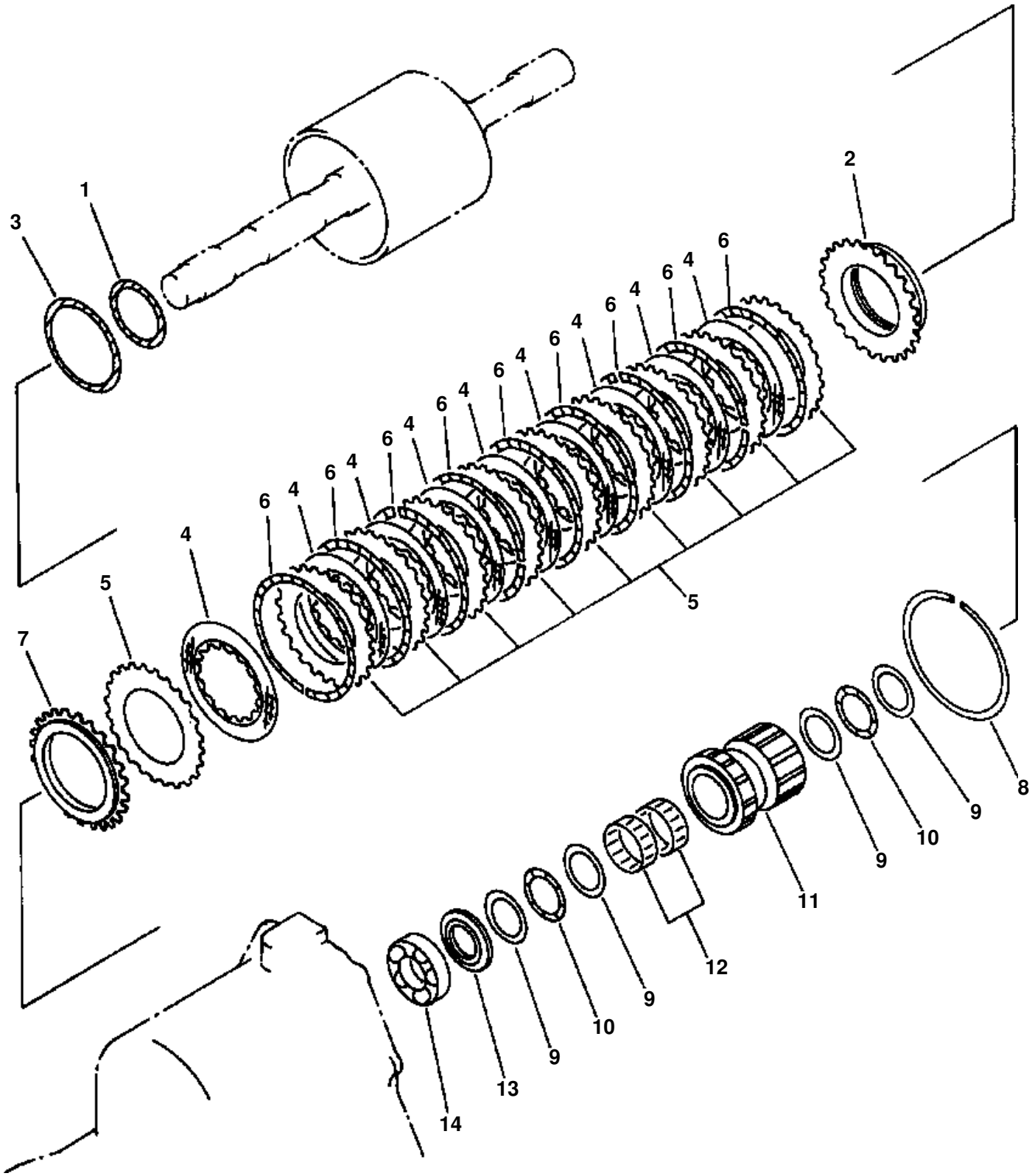

REVERSE CLUTCH

ITEM NO.	PART NO.	DESCRIPTION	Q'TY	REF
		TRANSMISSION (SEE PG 02-004)		
		・ CLUTCH, FORWARD & REVERSE (SEE PG 02-010)		F1
1	419-15-12210	・・ RING, SEAL	1	
2	419-15-12221	・・ PISTON	1	
3	419-15-12190	・・ RING, SEAL	1	
4	419-15-12290	・・ DISC	10	
5	419-15-12310	・・ PLATE, SEPARATE	11	
6	419-15-12133	・・ SPRING, WAVE	10	
7	419-15-12280	・・ PLATE, END	1	
8	419-15-12140	・・ RING, SNAP	1	
9	419-15-12240	・・ WASHER, THRUST	4	
10	419-15-12250	・・ BEARING, THRUST	2	
11	419-15-12261	・・ GEAR, REVERSE	1	
12	419-15-12270	・・ BEARING, NEEDLE	2	
13	419-15-12330	・・ SPACER	1	
14	419-15-12160	・・ BEARING, ROLLER	1	
		F1 - INCLUDES PARTS LISTED ON PG 02-011		

FIG 07CZW320.003 **THIRD CLUTCH**

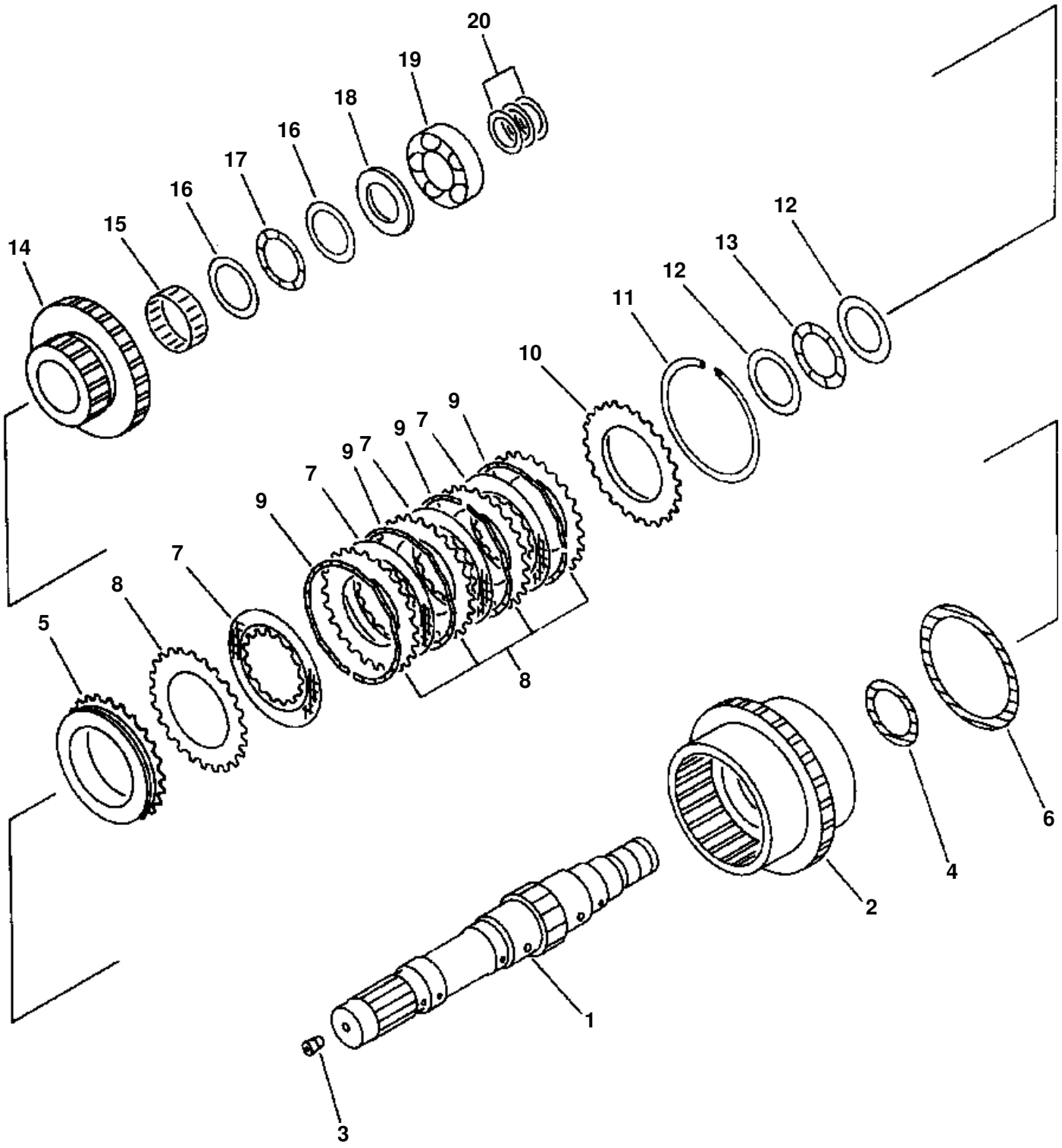

THIRD CLUTCH

ITEM NO.	PART NO.	DESCRIPTION	Q'TY	REF
		TRANSMISSION (SEE PG 02-004)		
	419-15-12403	· CLUTCH ASSEMBLY, 1st & 3rd	1	F1
	419-15-12414	· · HOUSING ASSEMBLY	1	
1	(NSS)	· · · SHAFT	1	
2	(NSS)	· · · HOUSING	1	
3	419-15-12750	· · · PLUG	1	
4	419-15-12210	· · RING, SEAL	1	
5	419-15-13191	· · PISTON	1	
6	419-15-12580	· · RING, SEAL	1	
7	419-15-12290	· · DISC	6	
8	419-15-12310	· · PLATE, SEPARATE	7	
9	419-15-12133	· · SPRING, WAVE	6	
10	419-15-12280	· · PLATE, END	1	
11	419-15-12140	· · RING, SNAP	1	
12	419-15-12680	· · WASHER, THRUST	2	
13	419-15-12670	· · BEARING, THRUST	1	
14	419-15-12521	· · GEAR, 3RD	1	
15	419-15-12660	· · BEARING, NEEDLE	1	
16	419-15-12650	· · WASHER, THRUST	2	
17	419-15-12640	· · BEARING, THRUST	1	
18	419-15-12610	· · SPACER	1	
19	06030-06211	· · BEARING	1	
20	419-15-12121	· RING, SEAL	3	
		F1 - INCLUDES PARTS LISTED ON PAGE 02-017		

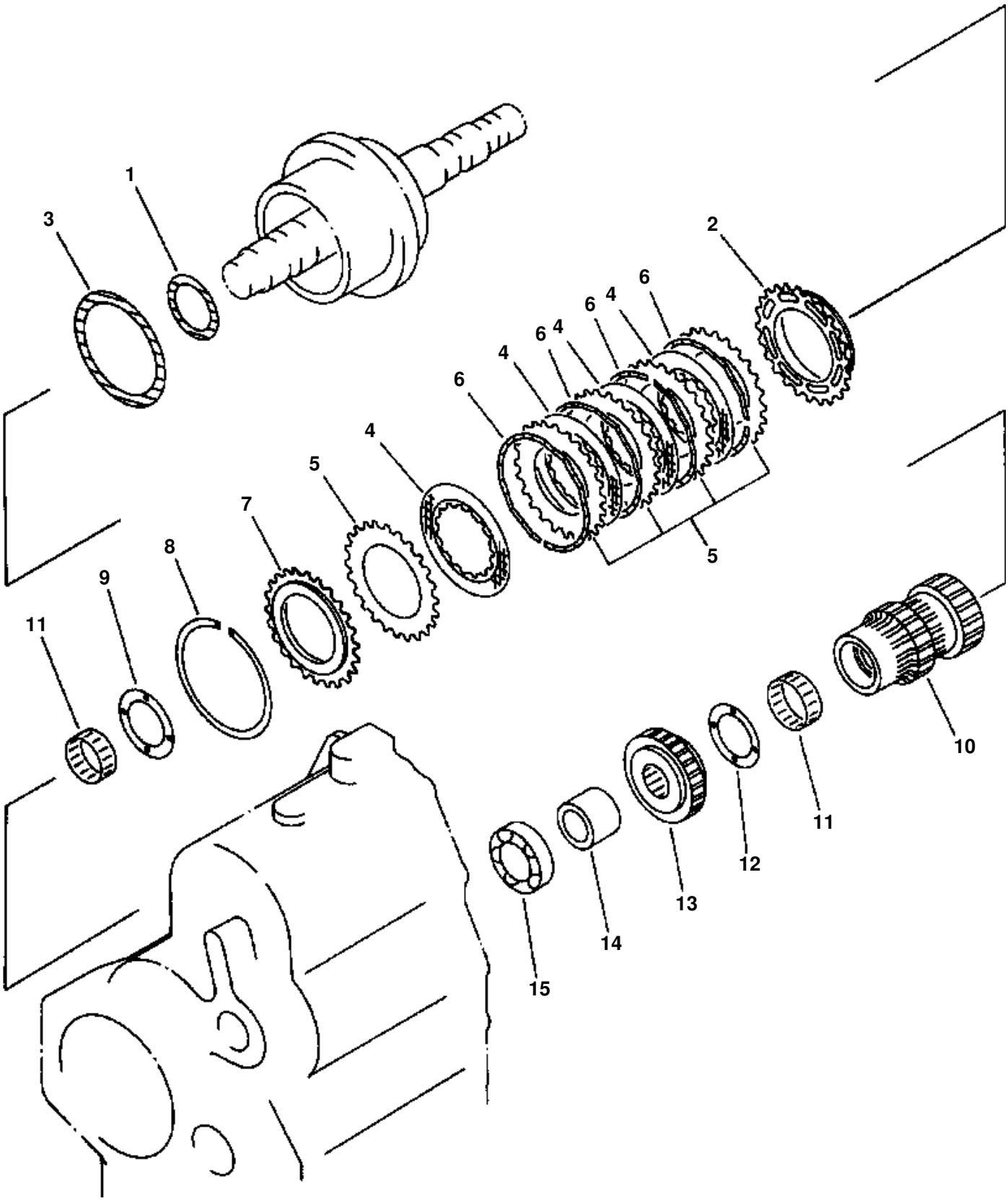
1
3
2
6
4
6
4
6
4
6
5
4
5
7
8
9
11
10
11
12
13
14
15

FIRST CLUTCH

ITEM NO.	PART NO.	DESCRIPTION	Q'TY	REF
		TRANSMISSION (SEE PG 02-004)		
		・ CLUTCH, 1st & 3rd (SEE PG 02-014)		F1
1	419-15-12210	・・ RING, SEAL	1	
2	419-15-13191	・・ PISTON	1	
3	419-15-12580	・・ RING, SEAL	1	
4	419-15-12290	・・ DISC	6	
5	419-15-12310	・・ PLATE, SEPARATE	7	
6	419-15-12133	・・ SPRING, WAVE	6	
7	419-15-12280	・・ PLATE, END	1	
8	419-15-12140	・・ RING, SNAP	1	
9	419-15-12622	・・ WASHER, THRUST	1	
10	419-15-12552	・・ GEAR, 1ST	1	
11	419-15-12660	・・ BEARING	2	
12	419-15-12632	・・ WASHER, THRUST	1	
13	419-15-12562	・・ GEAR	1	
14	419-15-12571	・・ COLLAR	1	
15	419-15-12591	・・ BEARING	1	
		F1 - INCLUDES PARTS LISTED ON PG 02-015		

FIG 07CZW320.005 **FOURTH CLUTCH**

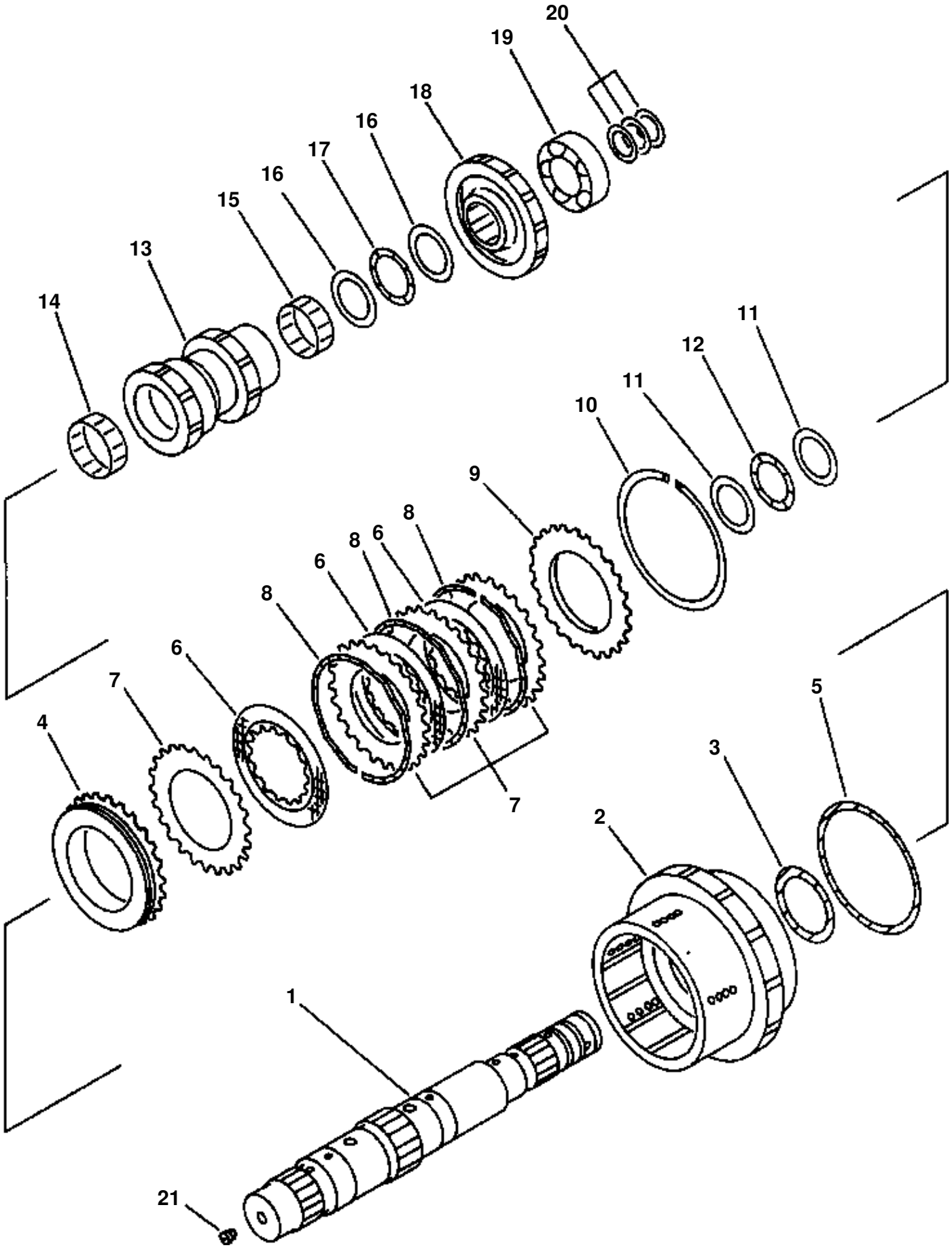

FOURTH CLUTCH

ITEM NO.	PART NO.	DESCRIPTION	Q'TY	REF
		TRANSMISSION (SEE PG 02-004)		
	419-15-13402	· CLUTCH ASSEMBLY, 2nd & 4th	1	F1
	418-15-11142	· · SHAFT ASSEMBLY	1	
1	(NSS)	· · · SHAFT	1	
2	(NSS)	· · · HOUSING	1	
3	419-15-12210	· · RING	1	
4	419-15-13191	· · PISTON	1	
5	419-15-12580	· · RING	1	
6	419-15-12290	· · DISC	3	
7	419-15-12310	· · PLATE	4	
8	419-15-12133	· · SPRING	3	
9	419-15-12280	· · PLATE	1	
10	419-15-12140	· · RING	1	
11	419-15-12680	· · WASHER	2	
12	419-15-12670	· · BEARING	1	
13	419-15-13222	· · GEAR, 4TH	1	
14	419-15-12660	· · BEARING, NEEDLE	1	
15	419-15-12270	· · BEARING, NEEDLE	1	
16	419-15-12240	· · WASHER, THRUST	2	
17	419-15-12250	· · BEARING, THRUST	1	
18	419-15-13242	· · GEAR	1	
19	06030-06310	· · BEARING	1	
20	419-15-12121	· RING, SEAL	3	
21	419-15-12750	· PLUG	1	
		F1 - INCLUDES PARTS LISTED ON PG 02-021.		

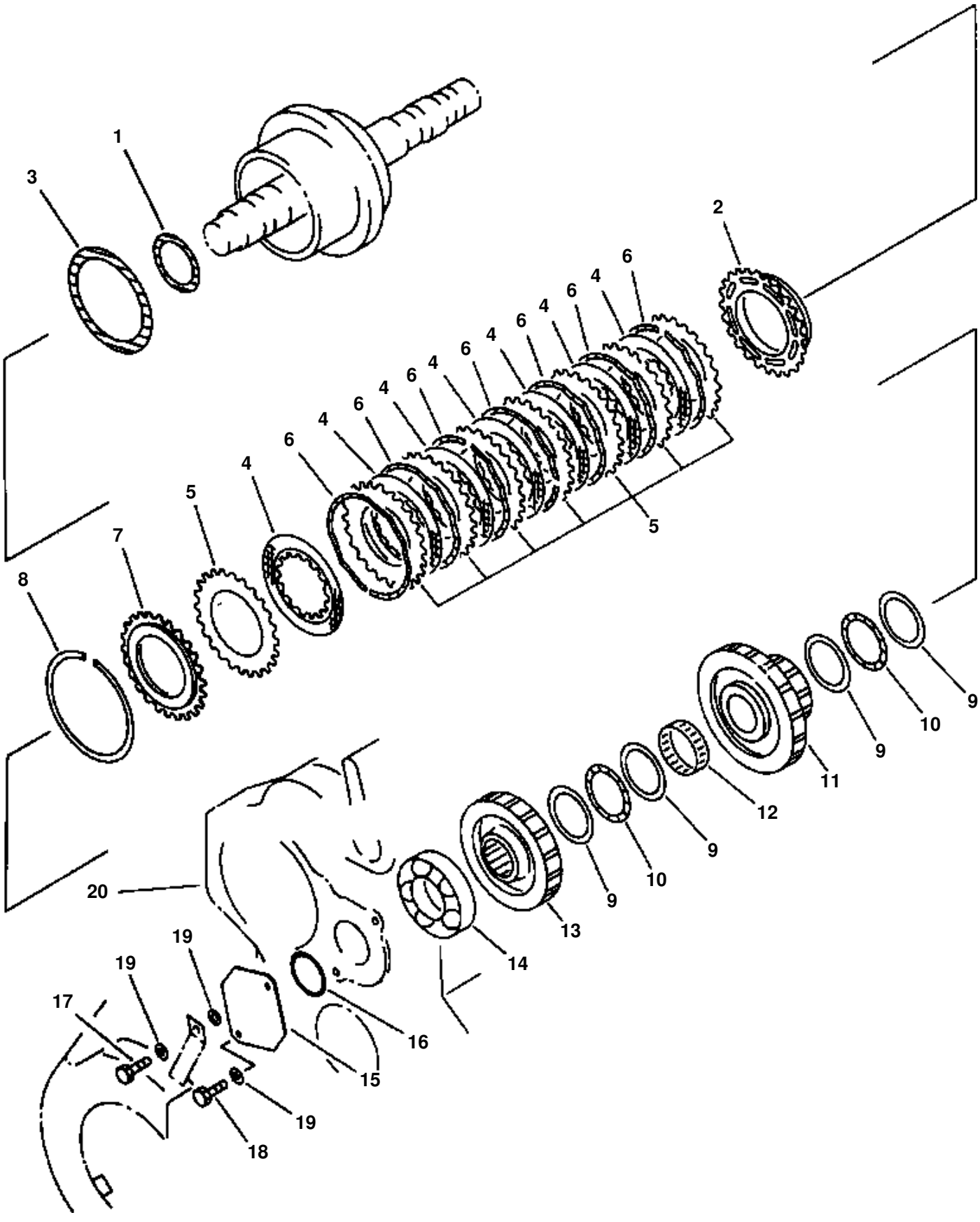
1
3
2
6
4
6
4
6
4
6
4
6
4
6
4
6
4
5
5
7
8
9
10
9
11
12
9
10
9
13
14
20
19
19
17
16
15
19
18

SECOND CLUTCH

ITEM NO.	PART NO.	DESCRIPTION	Q'TY	REF
		TRANSMISSION (SEE PG 02-004)		
		· CLUTCH, 2nd & 4th (SEE PG 02-018)		F1
1	419-15-12210	· · RING, SEAL	1	
2	419-15-13191	· · PISTON	1	
3	419-15-12580	· · RING, SEAL	1	
4	419-15-12290	· · DISC	9	
5	419-15-12310	· · PLATE, SEPARATE	10	
6	419-15-12133	· · SPRING, WAVE	9	
7	419-15-12280	· · PLATE, END	1	
8	419-15-12140	· · RING, SNAP	1	
9	419-15-12680	· · WASHER, THRUST	4	
10	419-15-12670	· · BEARING, THRUST	2	
11	419-15-13161	· · GEAR, 2ND	1	
12	419-15-13150	· · BEARING, NEEDLE	1	
13	419-15-13410	· · GEAR	1	
14	419-15-13250	· · BEARING	1	
15	419-15-14231	· COVER	1	
16	07000-02075	· O-RING	1	
17	01010-31230	· BOLT	1	
18	01010-31235	· BOLT	1	
19	01643-31232	· WASHER	3	
20		· TRANSMISSION CASE (SEE PG 02-008)		
		F1 - INCLUDES PARTS LISTED ON PG 02-019.		

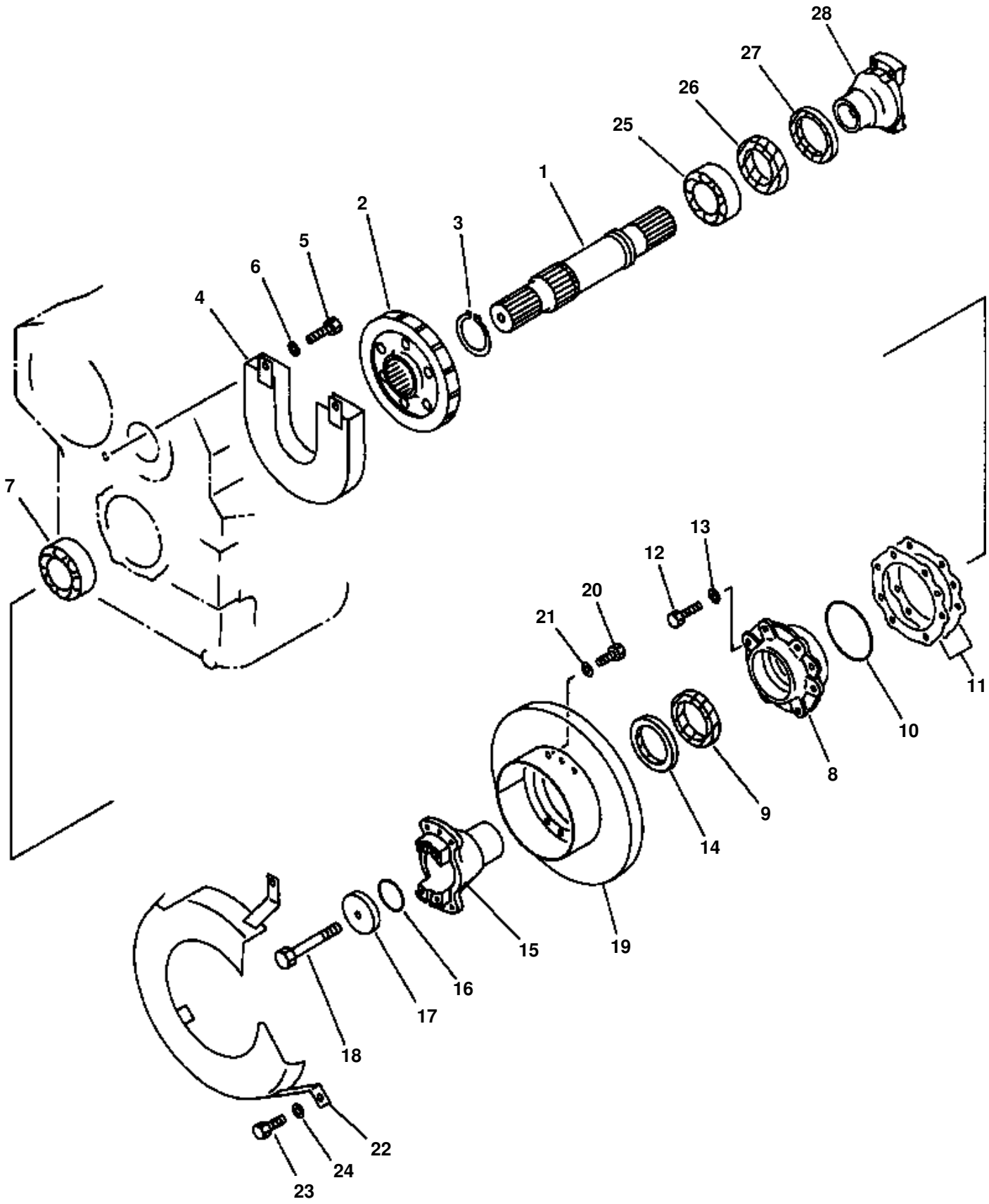
28
27
26
25
1
2
3
5
6
4
7
13
12
20
21
11
10
8
9
14
15
19
16
17
18
22
24
23

OUTPUT SHAFT

ITEM NO.	PART NO.	DESCRIPTION	Q'TY
		TRANSMISSION (SEE PG 02-004)	
1	419-15-13510	· SHAFT, OUTPUT	1
2	419-15-13810	· GEAR	1
3	04064-07025	· RING, SNAP	1
4	419-15-13711	· COVER, GEAR	1
5	01010-31225	· BOLT	2
6	01643-31232	· WASHER	2
7	06000-30212	· BEARING	1
8	419-15-13551	· RETAINER	1
9	419-15-13650	· SEAL, OIL	1
10	07000-02130	· O-RING	1
11	419-15-13620	· SHIM - 0.05MM	20
	419-15-13630	· SHIM - 0.1MM	12
	419-15-13640	· SHIM - 0.2MM	8
12	01010-31230	· BOLT	6
13	01643-31232	· WASHER	6
14	419-15-13660	· SEAL, DUST	1
15	419-15-13533	· COUPLING, FRONT	1
16	07000-32055	· O-RING	1
17	423-22-11240	· HOLDER	1
18	01011-31610	· BOLT	1
19	419-43-15631	· DISC, PARKING BRAKE	1
20	01010-31240	· BOLT	6
21	01643-31232	· WASHER	6
22	419-15-13721	· COVER	1
23	01010-31225	· BOLT	2
24	01643-31232	· WASHER	2
25	06000-30212	· BEARING	1
26	419-15-13650	· SEAL, OIL	1
27	419-15-13660	· SEAL, DUST	1
28	419-15-13071	· COUPLING, REAR	1

FIG 07EDW250.001 TRANSMISSION CONTROL VALVE UPPER ASSEMBLY

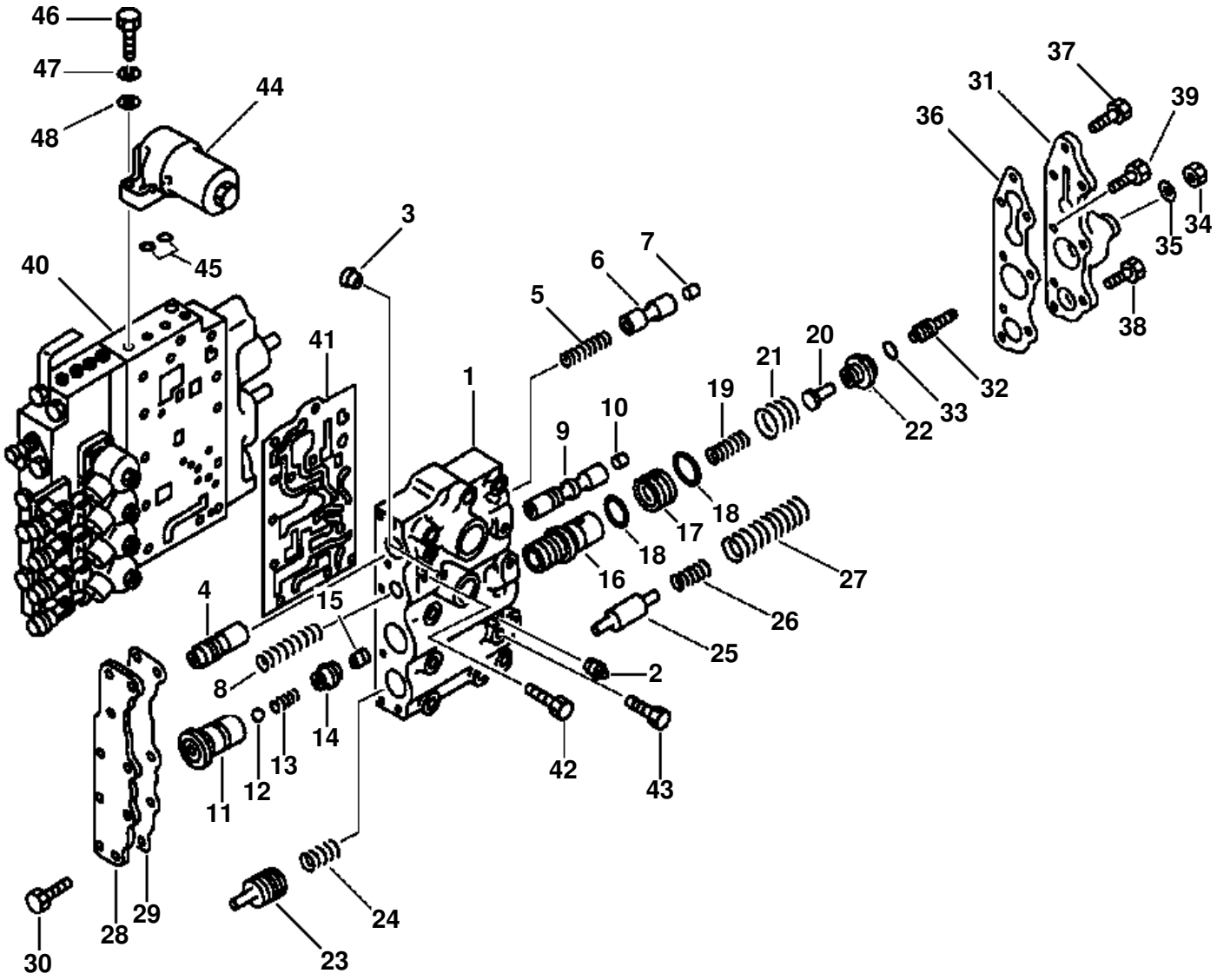

TRANSMISSION CONTROL VALVE UPPER ASSEMBLY

ITEM NO.	PART NO.	DESCRIPTION	Q'TY
	419-15-15022	VALVE ASSEMBLY, TRANSMISSION CONTROL	1
	419-15-15201	· VALVE ASSEMBLY, TRANSMISSION CONTROL (UPPER)	1
1	419-15-15711	· · BODY, UPPER	1
2	07042-30108	· · PLUG	3
3	417-15-15842	· · ORIFICE	1
4	419-15-15760	· · VALVE, PILOT	1
5	419-15-15910	· · SPRING	1
6	419-15-15770	· · VALVE, MAIN	1
7	419-15-15830	· · PISTON	1
8	419-15-15920	· · SPRING	1
9	419-15-15780	· · VALVE, PRIORITY	1
10	419-15-15820	· · PISTON	1
11	419-15-15840	· · VALVE, QUICK RETURN	1
12	04260-01270	· · BALL	1
13	419-15-15510	· · SPRING	1
14	419-15-15850	· · PLUG	1
15	419-15-15640	· · ORIFICE	1
16	419-15-15810	· · VALVE, MODULATE	1
17	419-15-15860	· · SLEEVE	1
18	07000-03035	· · O-RING	2
19	419-15-15940	· · SPRING	1
20	419-15-15980	· · RETAINER	1
21	419-15-15930	· · SPRING	1
22	419-15-15890	· · PLUG	1
23	419-15-15790	· · VALVE, ACCUMULATOR	1
24	419-15-15960	· · SPRING	1
25	419-15-15870	· · SHAFT	1
26	419-15-15970	· · SPRING	1
27	419-15-15950	· · SPRING	1
28	419-15-15730	· · COVER	1
29	419-15-15750	· · GASKET	1
30	01010-31030	· · BOLT	9
31	419-15-15720	· · COVER	1
32	419-15-15880	· · ROD ADJUST	1
33	07000-01009	· · O-RING	1
34	01580-11008	· · NUT	1
35	01643-31032	· · WASHER	1
36	419-15-15740	· · GASKET	1
37	01010-31030	· · BOLT	3
38	01010-31040	· · BOLT	3
39	01010-31050	· · BOLT	2
40		· VALVE ASSEMBLY, LOWER (SEE PG 02-028)	
41	419-15-16811	· GASKET	1
42	01010-30860	· BOLT	1
43	01010-30875	· BOLT	1
44	419-15-16660	· FILTER, TRANSMISSION CONTROL VALVE	1
	419-15-16930	· · ELEMENT, FILTER	1
	419-15-16940	· · COVER, HEAD	1
	419-15-16950	· · O-RING	1
	419-15-16960	· · CASE, FILTER	1
45	07000-02014	· O-RING	2
46	01010-31035	· BOLT	2
47	01602-01030	· WASHER, SPRING	2
48	01642-21016	· WASHER	2

FIG 07EDW250.002 TRANSMISSION CONTROL VALVE LOWER ASSEMBLY

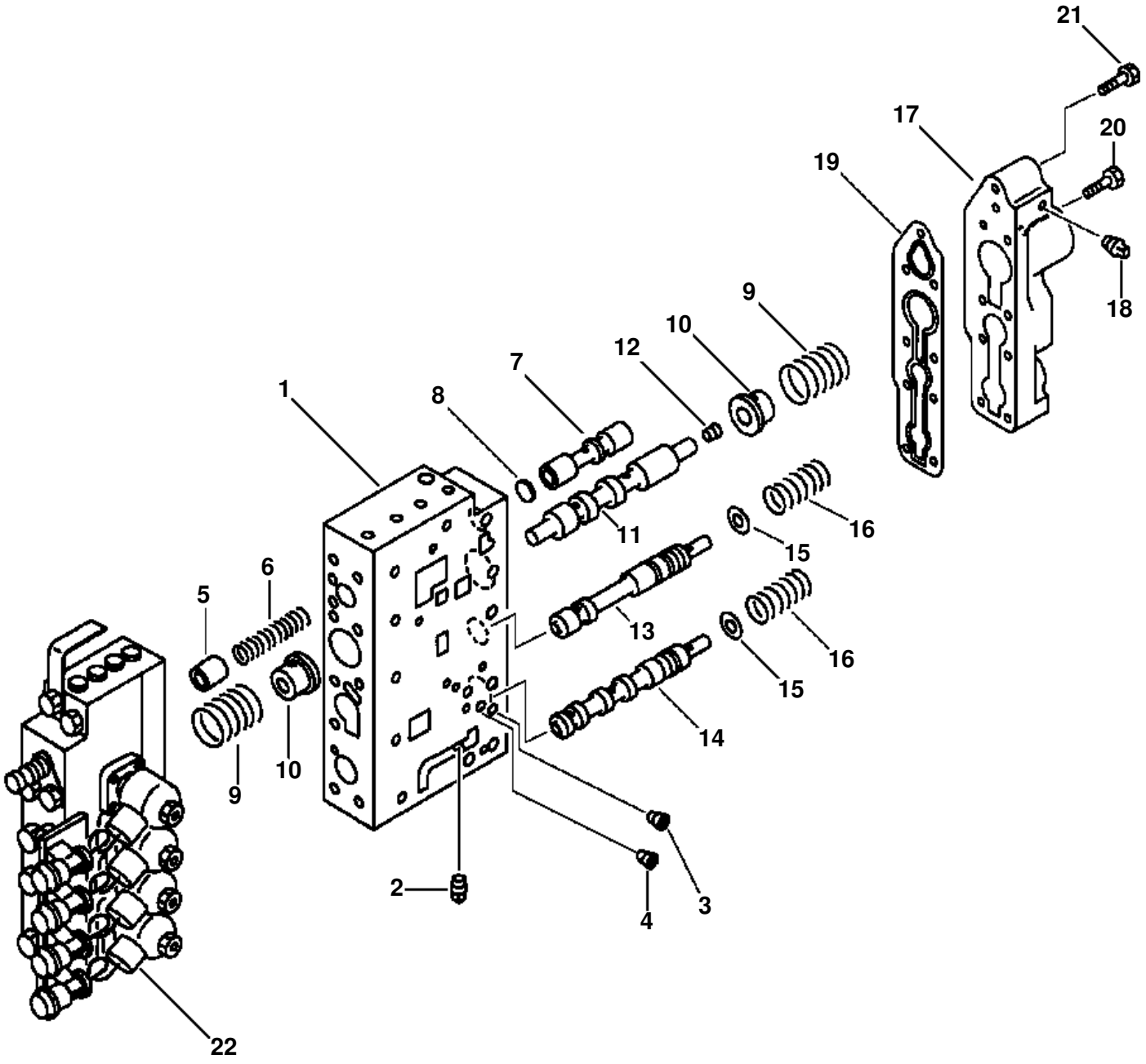

TRANSMISSION CONTROL VALVE LOWER ASSEMBLY

ITEM NO.	PART NO.	DESCRIPTION	Q'TY
	419-15-16502	VALVE ASSEMBLY, TRANSMISSION CONTROL (LOWER)	1
1	419-15-16521	· BODY	1
2	07042-30108	· PLUG	1
3	415-15-15430	· PLUG	1
4	419-15-15640	· PLUG	1
5	419-15-16640	· RETAINER	1
6	419-15-16610	· SPRING	1
7	419-15-16560	· VALVE SELECT	1
8	419-15-16650	· SHIM - 1mm	5
9	417-15-17280	· SPRING	2
10	417-15-17190	· SLEEVE	2
11	419-15-16570	· VALVE	1
12	02720-10104	· PLUG	1
13	419-15-16580	· VALVE	1
14	419-15-16590	· VALVE	1
15	419-15-16631	· SPACER	2
16	419-15-16620	· SPRING	2
17	419-15-16530	· COVER	1
18	07042-30108	· PLUG	1
19	419-15-16540	· GASKET	1
20	01010-31030	· BOLT	2
21	01010-31055	· BOLT	7
22		· SOLENOID VALVE ASSEMBLY (SEE PG 02-030)	

FIG 07EDW250.003 TRANSMISSION CONTROL VALVE SOLENOID ASSEMBLY

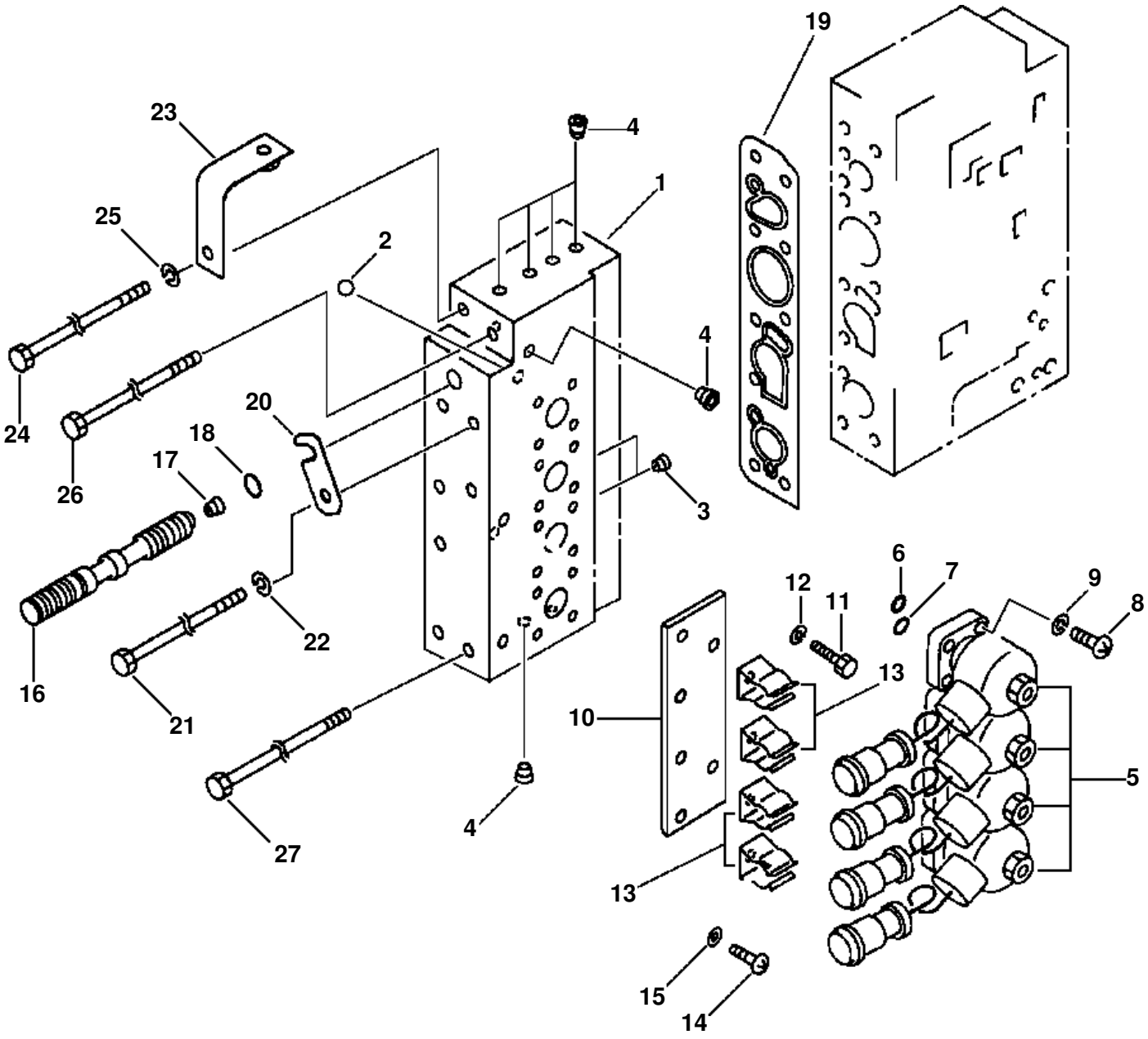

TRANSMISSION CONTROL VALVE SOLENOID ASSEMBLY

ITEM NO.	PART NO.	DESCRIPTION	Q'TY
	419-15-16701	VALVE ASSEMBLY, TRANSMISSION CONTROL SOLENOID	1
	419-15-16711	· BODY ASSEMBLY	1
1	(NSS)	· · BODY	1
2	(NSS)	· · BALL	5
3	419-15-15640	· ORIFICE	2
4	07043-70108	· PLUG	6
5	419-15-16910	· VALVE, SOLENOID	4
6	419-15-16840	· · O-RING	1
7	419-15-16830	· · O-RING	1
8	01220-40412	· SCREW	16
9	01601-20410	· WASHER, SPRING	16
10	419-15-16920	· PLATE	1
11	01010-30820	· BOLT	2
12	01602-00825	· WASHER	2
13	08052-01711	· CLIP	4
14	01220-40608	· SCREW	4
15	01641-20608	· WASHER	4
16	419-15-16751	· VALVE, MANUAL	1
17	415-15-15470	· ORIFICE	1
18	07000-02010	· O-RING	1
19	419-15-16550	GASKET	1
20	419-15-16670	PLATE, LOCK	1
21	01011-31030	BOLT	1
22	01643-31032	WASHER	1
23	419-06-12840	PLATE	1
24	01011-31010	BOLT	1
25	01643-31032	WASHER	1
26	01011-31005	BOLT	1
27	01011-31025	BOLT	6

FIG 07FDW320.001 TRANSMISSION & TORQUE CONVERTER CHARGING PUMP

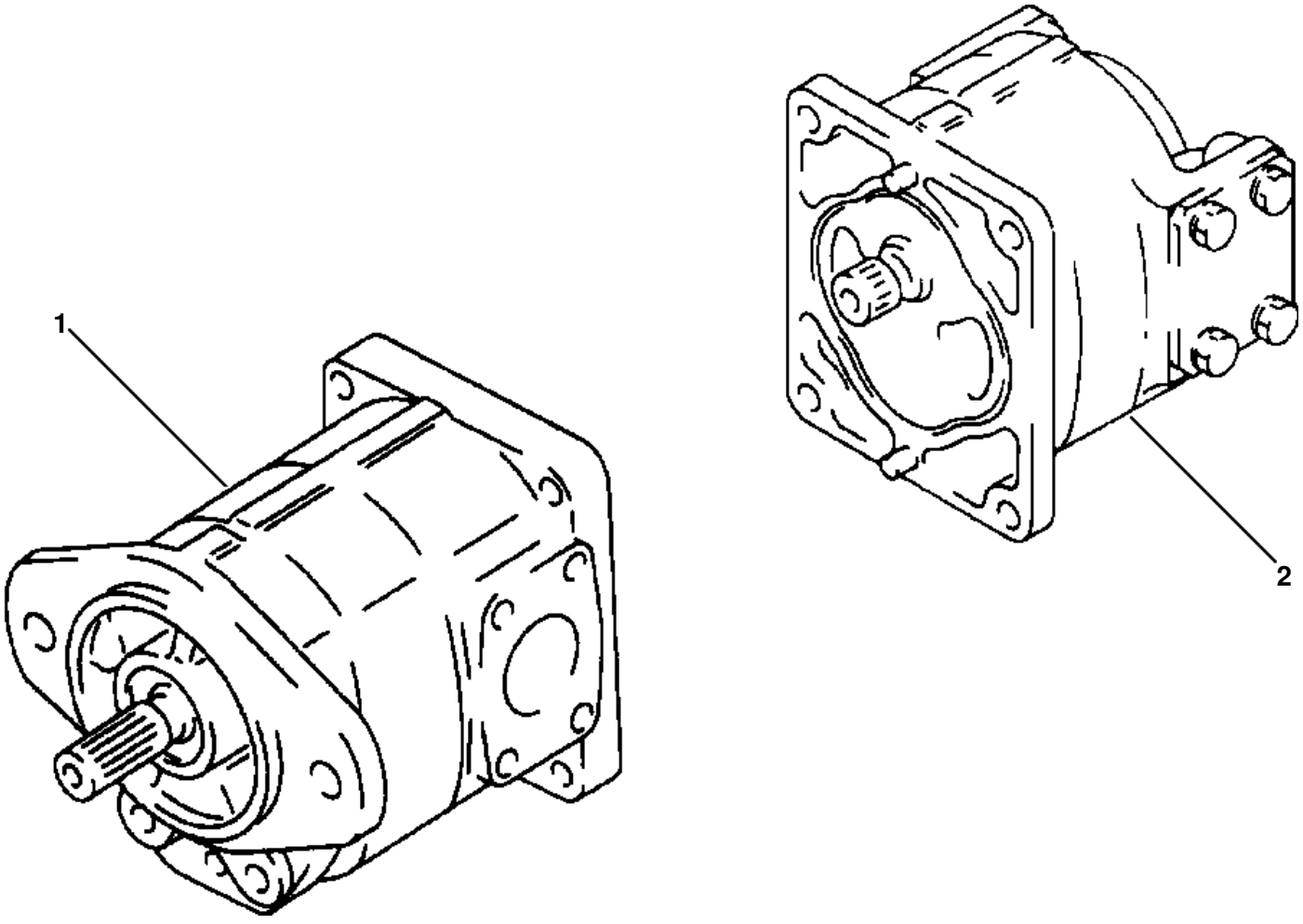

TRANSMISSION & TORQUE CONVERTER CHARGING PUMP

ITEM NO.	PART NO.	DESCRIPTION	Q'TY	REF
	705-51-20070	PUMP ASSEMBLY, CHARGING	1	F1
1		· PUMP ASSEMBLY, FRONT CHARGE (SEE PG 02-034)		
2		· PUMP ASSEMBLY, REAR CHARGE (SEE PG 02-036)		
		F1 - FOR MOUNTING HARDWARE, SEE PG 02-039		

FIG 07FDW320.002 **FRONT CHARGING PUMP**

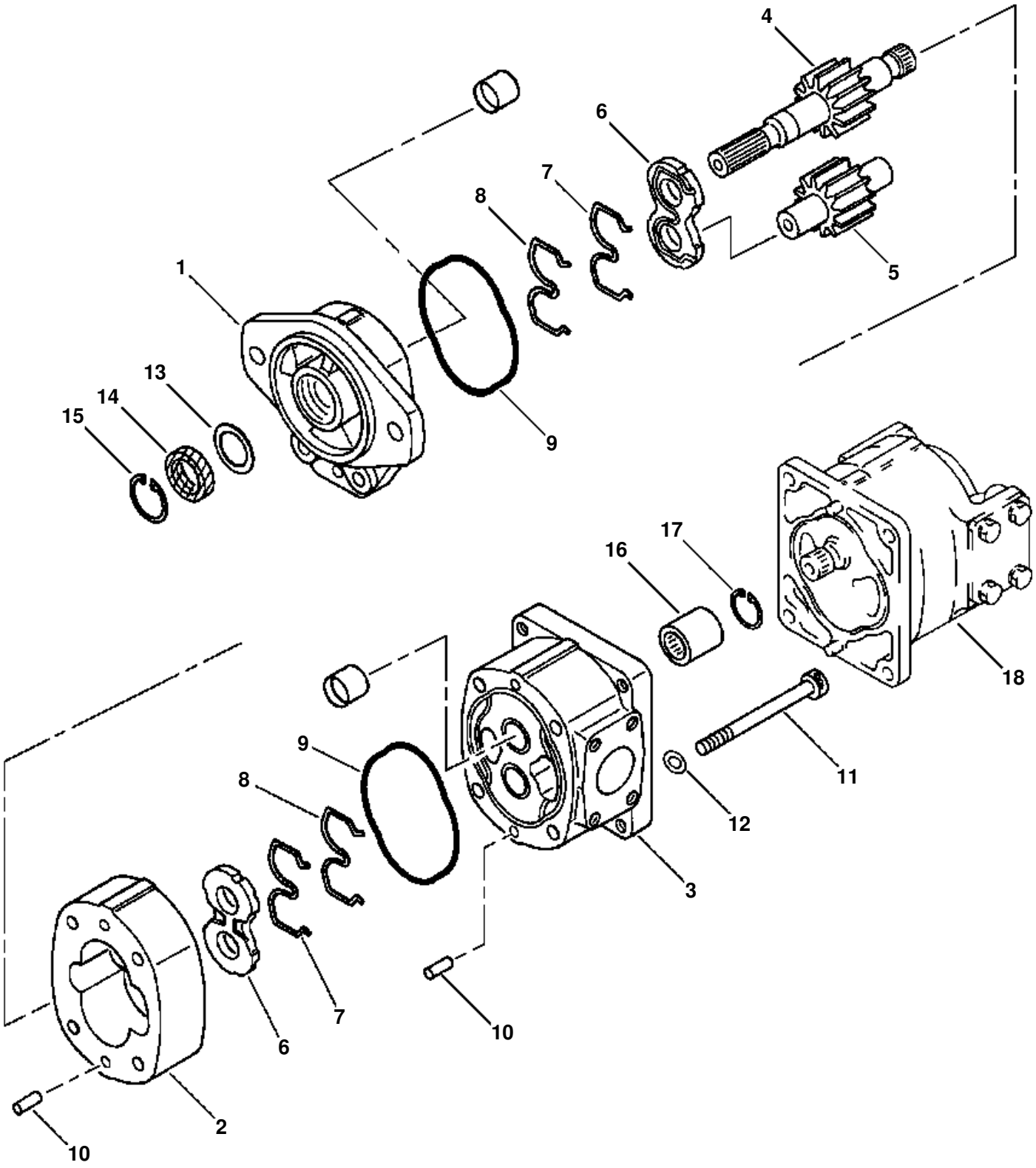

FRONT CHARGING PUMP

ITEM NO.	PART NO.	DESCRIPTION	Q'TY
		PUMP ASSEMBLY (SEE PG 02-032)	
	705-11-32210	· PUMP ASSEMBLY, FRONT CHARGING	1
1	(NSS)	· · BRACKET	1
2	(NSS)	· · CASE, GEAR	1
3	(NSS)	· · CARRIER ASSEMBLY	1
4	(NSS)	· · GEAR, DRIVE	1
5	(NSS)	· · GEAR, DRIVEN	1
6	705-17-02612	· · PLATE, SIDE	2
7	705-17-02440	· · RING, BACKUP	2
8	705-17-02472	· · RING, SEAL	2
9	705-17-02381	· · O-RING	2
10	04020-01024	· · PIN, DOWEL	4
11	705-17-02780	· · BOLT	4
12	01602-21236	· · WASHER, SPRING	4
13	705-17-02870	· · PLATE	1
14	705-17-02810	· · SEAL, OIL	1
15	04065-04018	· · RING, SNAP	1
16	705-17-02310	· · COUPLING	1
17	04065-02012	· RING, SNAP	1
18		· PUMP ASSEMBLY, REAR CHARGE (SEE PG 02-036)	

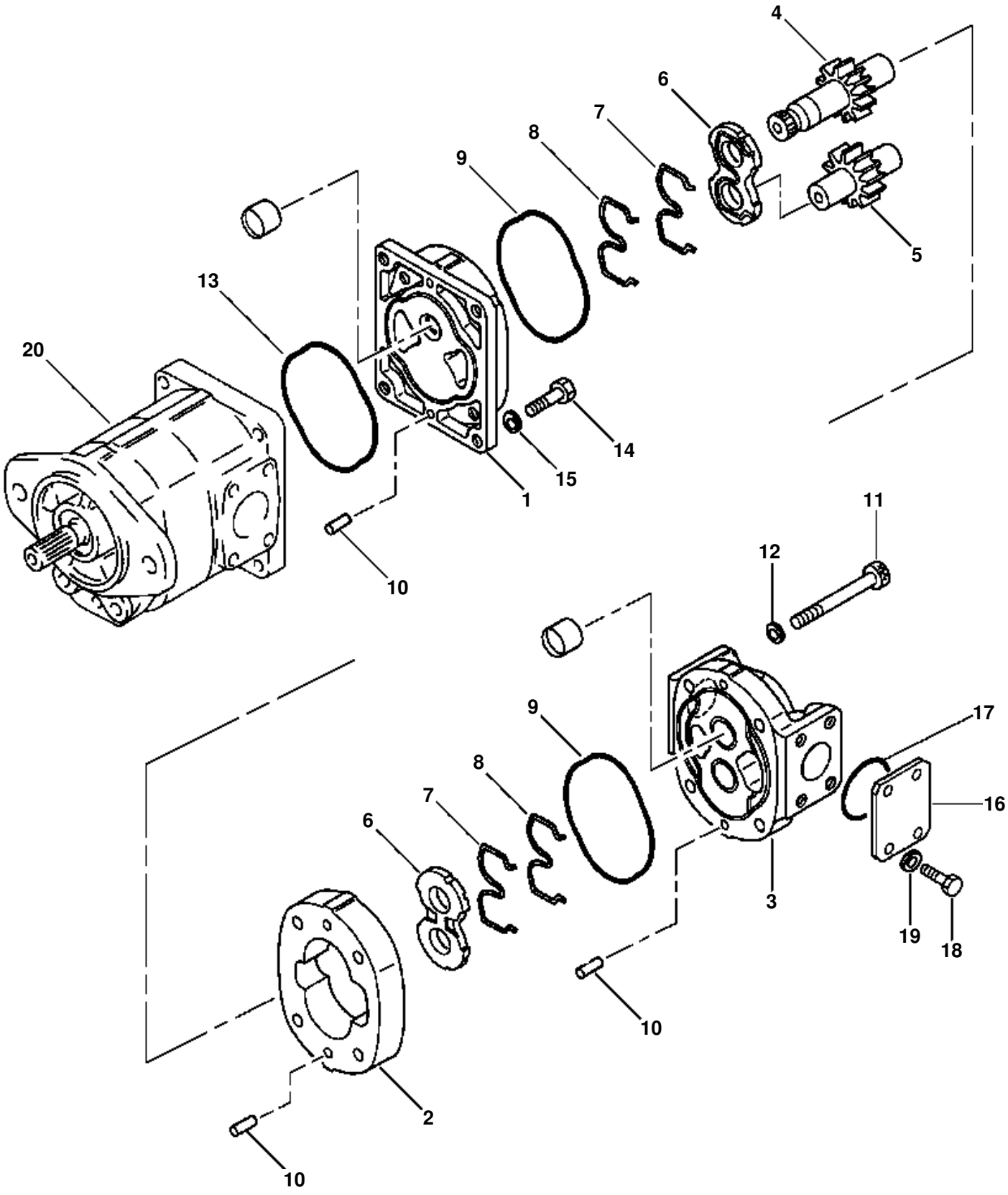
4
6
7
8
9
5
13
20
1
15
14
10
11
12
9
17
8
7
6
16
3
19
18
10
2
10

REAR CHARGING PUMP

ITEM NO.	PART NO.	DESCRIPTION	Q'TY
		PUMP ASSEMBLY (SEE PG 02-032)	
	705-13-26530	・ PUMP ASSEMBLY, REAR CHARGE	1
1	(NSS)	・・ BRACKET	1
2	(NSS)	・・ CASE, GEAR	1
3	(NSS)	・・ COVER	1
4	(NSS)	・・ GEAR, DRIVE	1
5	(NSS)	・・ GEAR, DRIVEN	1
6	705-17-02612	・・ PLATE, SIDE	2
7	705-17-02440	・・ RING, BACKUP	2
8	705-17-02472	・・ RING, SEAL	2
9	705-17-02381	・・ O-RING	2
10	04020-01024	・・ PIN, DOWEL	6
11	705-17-02720	・・ BOLT	4
12	01602-21236	・・ WASHER, SPRING	4
13	705-17-02480	・ O-RING	1
14	705-17-02374	・ BOLT	4
15	01602-01030	・ WASHER, SPRING	4
16	705-17-02881	・ PLATE	1
17	07000-03038	・ O-RING	1
18	01010-51025	・ BOLT	4
19	01602-21030	・ WASHER, SPRING	4
20		・ PUMP ASSEMBLY, FRONT CHARGE (SEE PG 02-034)	

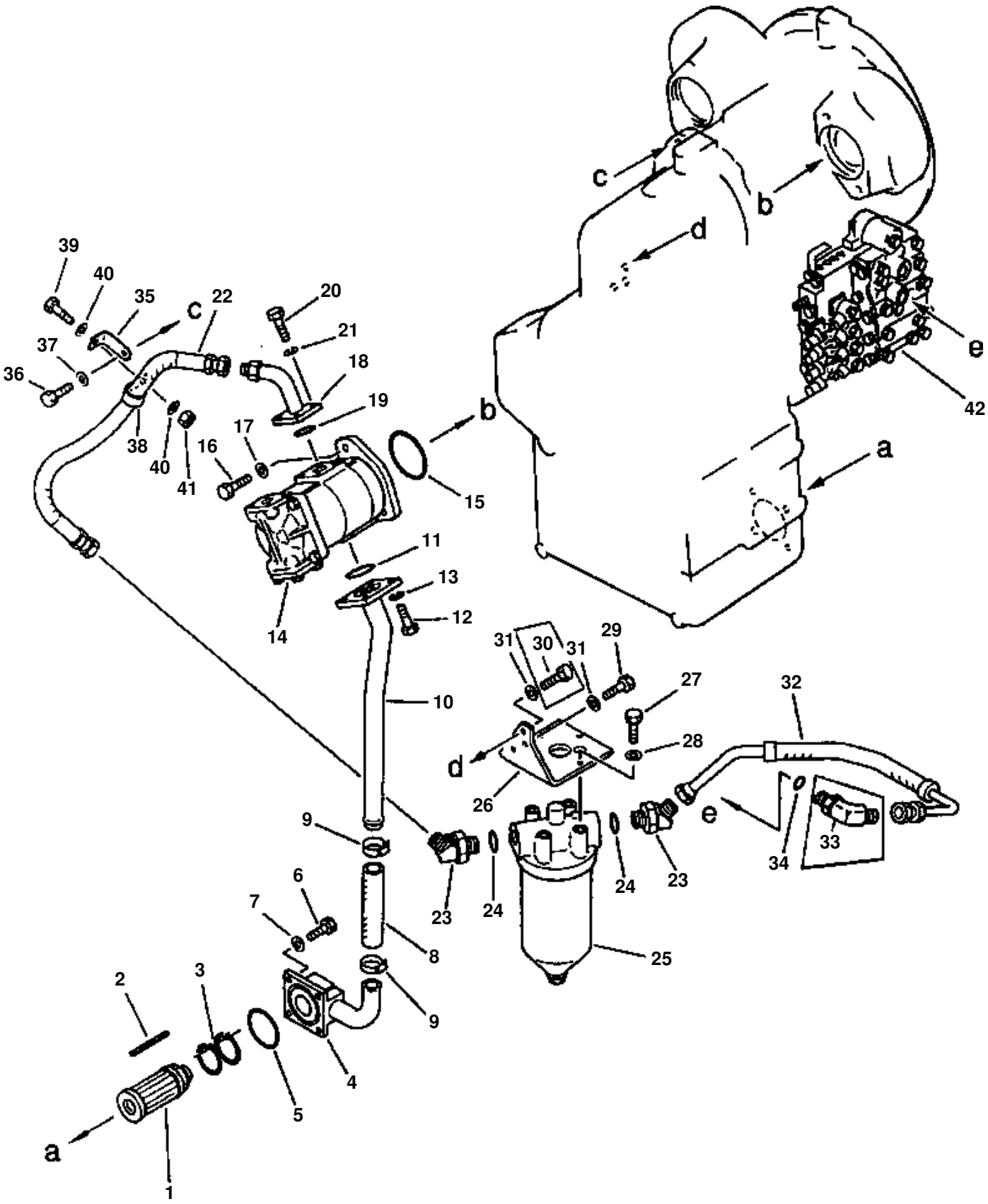
a
b
c
d
e
1
2
3
4
5
6
7
8
9
10
11
12
13
14
15
16
17
18
19
20
21
22
23
24
25
26
27
28
29
30
31
32
33
34
35
36
37
38
39
40
41
42

TRANSMISSION PIPING

ITEM NO.	PART NO.	DESCRIPTION	Q'TY
		TRANSMISSION (SEE PG 02-004)	
	419-15-14510	· STRAINER ASSEMBLY	1
1	419-15-14650	· · STRAINER	1
2	417-15-14660	· · MAGNET	5
3	419-15-14660	· · SPRING, SUPPORT	1
4	419-15-14523	· FLANGE	1
5	07000-02085	· O-RING	1
6	01010-31080	· BOLT	4
7	01643-31032	· WASHER	4
8	419-15-14752	· HOSE	1
9	072818-00489	· CLAMP	2
10	419-15-14533	· TUBE	1
11	07000-03048	· O-RING	1
12	01010-31235	· BOLT	4
13	01602-10236	· WASHER, SPRING	4
14		· PUMP ASSEMBLY (SEE PG 02-032)	
15	07000-02105	· O-RING	1
16	01010-31235	· BOLT	2
17	01643-31232	· WASHER	2
18	419-15-14540	· TUBE	1
19	07000-03028	· O-RING	1
20	01010-30835	· BOLT	4
21	01602-00825	· WASHER, SPRING	4
22	07102-20609	· HOSE	1
23	419-15-14670	· ELBOW	2
24	07002-03334	· O-RING	2
25		· FILTER ASSEMBLY (SEE PG 02-042)	
26	419-15-14580	· SUPPORT	1
27	01010-31035	· BOLT	4
28	01643-31032	· WASHER	4
29	01010-31235	· BOLT	2
30	01010-31270	· BOLT	1
31	01643-31232	· WASHER	3
32	419-15-14742	· HOSE	1
33	07235-10628	· ELBOW	1
34	07002-02434	· O-RING	1
35	419-15-14550	· PLATE	1
36	01010-31240	· BOLT	1
37	01643-31232	· WASHER	1
38	08036-23014	· CLIP	1
39	01010-31025	· BOLT	1
40	01643-31032	· WASHER	2
41	01580-01008	· NUT	1
42		· VALVE ASSEMBLY, CONTROL (SEE PG 02-024)	
N/I	419-15-16821	· GASKET	1
	01011-31020	· BOLT	4
	01011-31030	· BOLT	2
	01011-31035	· BOLT	2
	419-15-16680	· BOLT	4
	419-15-16690	· BOLT	1

FIG 07BVW250.001 TRANSMISSION OIL FILTER

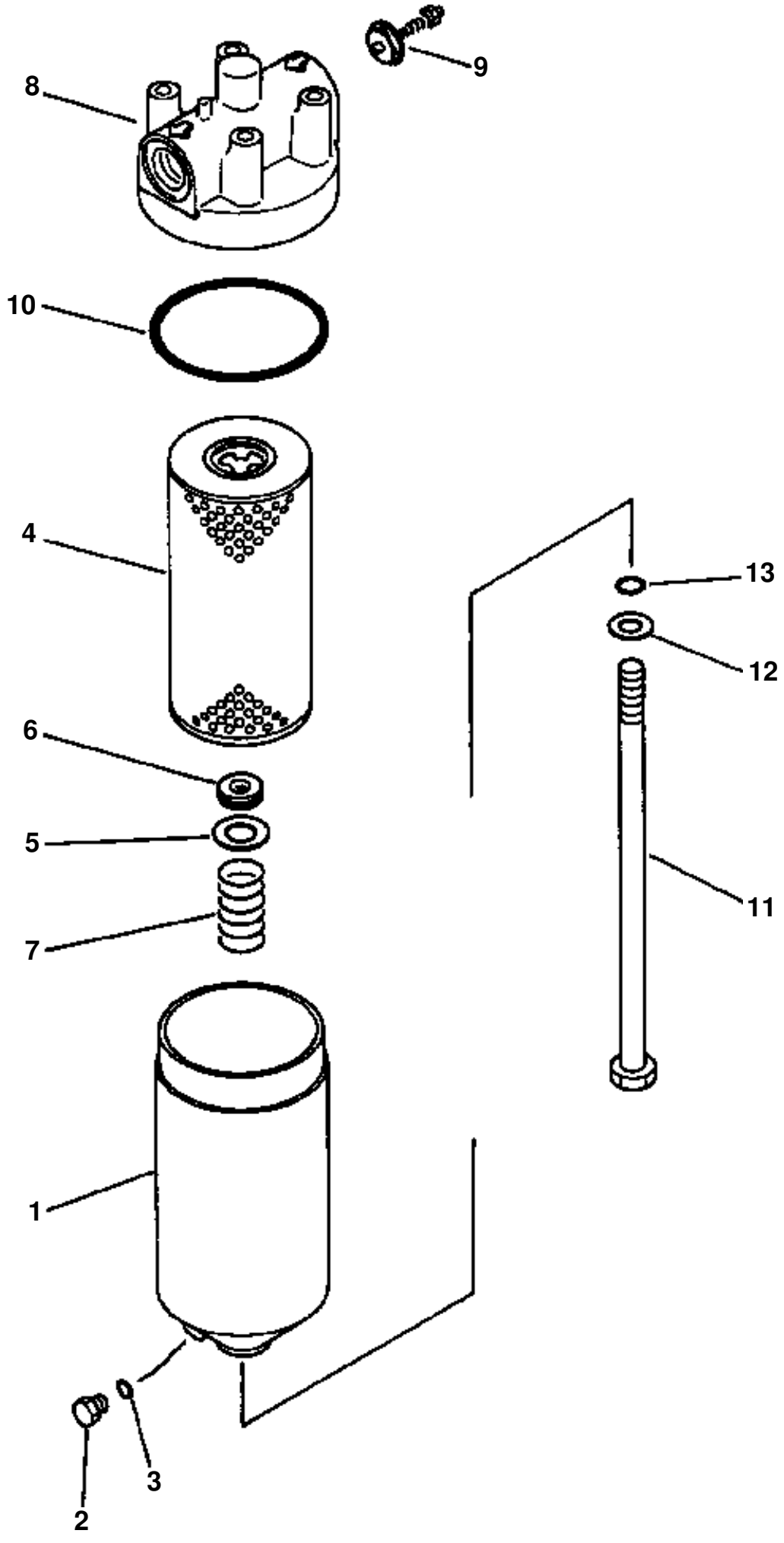

TRANSMISSION OIL FILTER

ITEM NO.	PART NO.	DESCRIPTION	Q'TY	REF
	419-15-14800	FILTER ASSEMBLY	1	F1
1	419-15-14820	· CASE	1	
2	07040-11209	· PLUG, OIL DRAIN	1	
3	07002-01223	· O-RING, OIL DRAIN PLUG	1	F2
4	424-16-11140	· ELEMENT	1	
5	419-15-14840	· PLATE	1	
6	419-15-14870	· GASKET, FILTER	1	F2
7	424-16-11190	· SPRING	1	
	419-15-14880	· COVER ASSEMBLY, HEAD	1	
8	(NSS)	· · COVER, HEAD	1	
9	(NSS)	· · VALVE	1	
10	424-16-11130	· O-RING, HEAD COVER	1	F2
11	419-15-14830	· BOLT, CENTER	1	
12	419-15-14850	· WASHER	1	
13	419-15-14860	· O-RING, CENTER	1	F2
N/I	416-15-05130	SERVICE KIT, TRANSMISSION FILTER	1	
		F1 - FOR MOUNTING HARDWARE, SEE PG 02-039		
		F2 - INCLUDED IN SERVICE KIT 416-15-05130.		

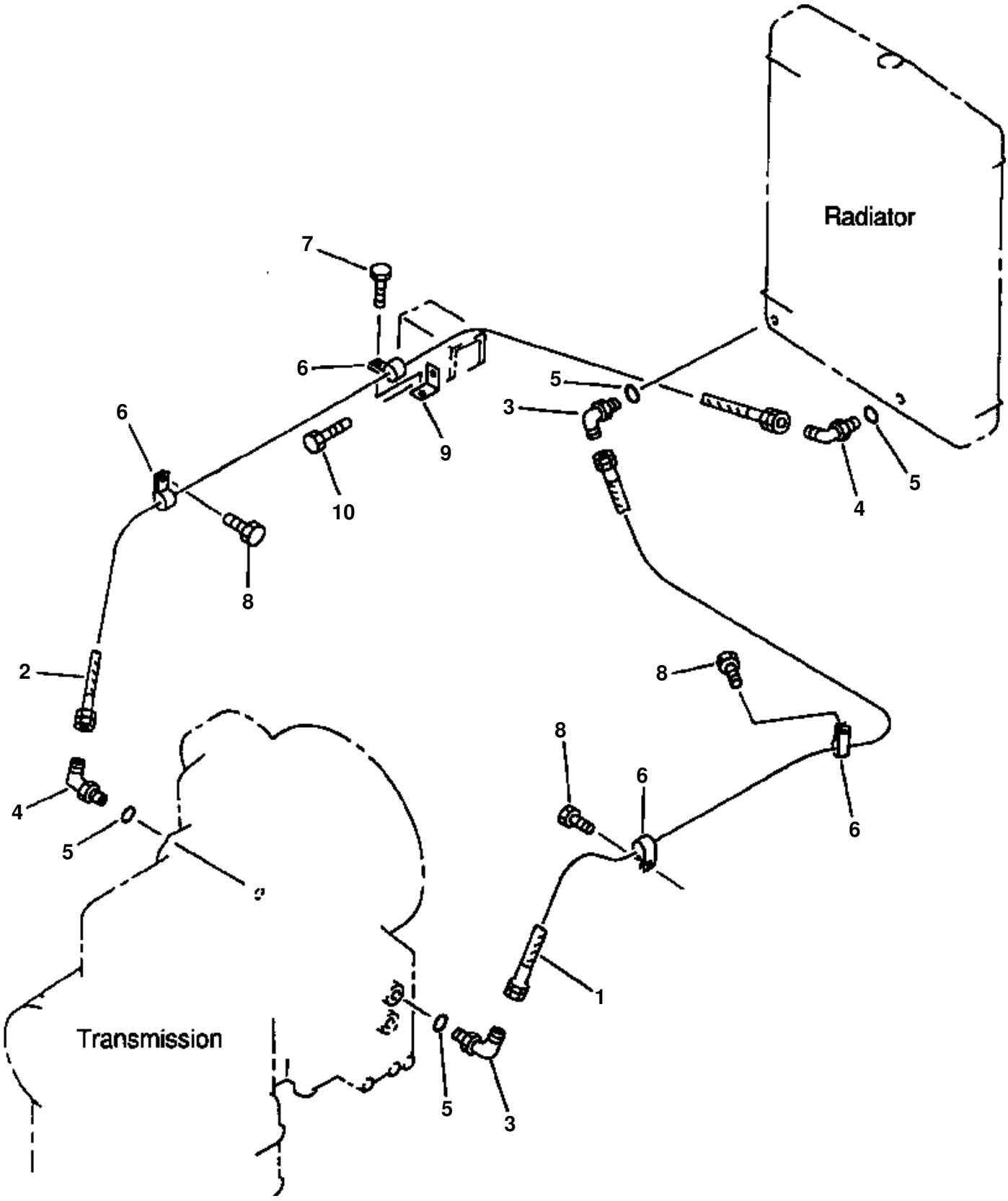
Radiator
Transmission
1
2
3
4
5
6
7
8
9
10

TRANSMISSION OIL COOLER PIPING

ITEM NO.	PART NO.	DESCRIPTION	Q'TY
1	07102-21021	HOSE	1
2	419-16-11140	HOSE	1
3	07235-11034	ELBOW	2
4	07236-11034	ELBOW	2
5	07002-03334	O-RING	4
6	281-01-13180	CLIP	4
7	01435-01020	BOLT	1
8	01435-01016	BOLT	3
9	419-16-11130	BRACKET	1
10	01435-01030	BOLT	1

DRIVE SHAFT,AXLES WHEELS & BRAKE SYSTEMS

DESCRIPTION
DRIVE SHAFT CENTER
FRONT DRIVE SHAFT
REAR DRIVE SHAFT
FRONT AXLE HOUSING
FRONT DIFFERENTIAL
FINAL DRIVE & WHEEL BRAKE (FRONT)
REAR AXLE HOUSING
REAR DIFFERENTIAL
FINAL DRIVE & WHEEL BRAKE (REAR)
PARKING BRAKE MOUNTING PARTS
PARKING BRAKE
PARKING BRAKE CONTROL
TIRES AND WHEELS 17.5 X 25
TIRES AND WHEELS 20.5 X 25
BRAKE PEDAL & LINKAGE
BRAKE OIL PIPING PUMP TO VALVE
BRAKE OIL PIPING VALVE TO FRONT AXLE
BRAKE OIL PIPING VALVE TO REAR AXLE
BRAKE VALVE
UNLOAD RELIEF VALVE
ACCUMULATOR

FIG 07ERW250.001 **DRIVE SHAFT CENTER**

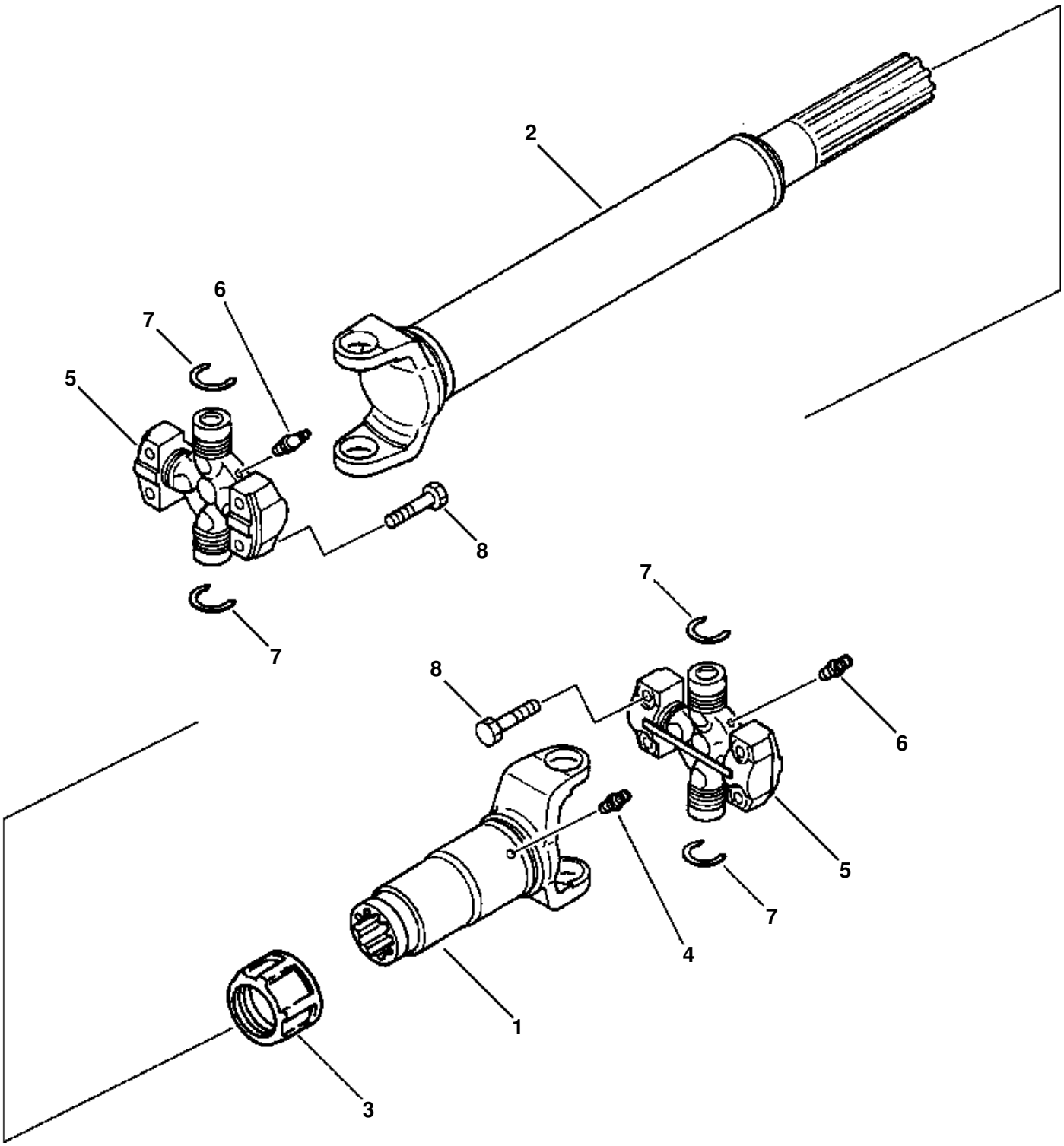

DRIVE SHAFT CENTER

ITEM NO.	PART NO.	DESCRIPTION	Q'TY
	419-20-12114	DRIVE SHAFT ASSEMBLY, CENTER	1
	419-20-12651	・ YOKE AND SHAFT ASSEMBLY	1
1	419-20-12722	・・ YOKE	1
2	419-20-12731	・・ SHAFT	1
3	419-20-12740	・・ SEAL	1
4	419-20-12640	・・ FITTING, GREASE	1
5	419-20-12621	・ SPIDER ASSEMBLY	2
6	419-20-12640	・ FITTING, GREASE	2
7	419-20-12691	・ RING, SNAP	4
8	01050-61045	BOLT	8

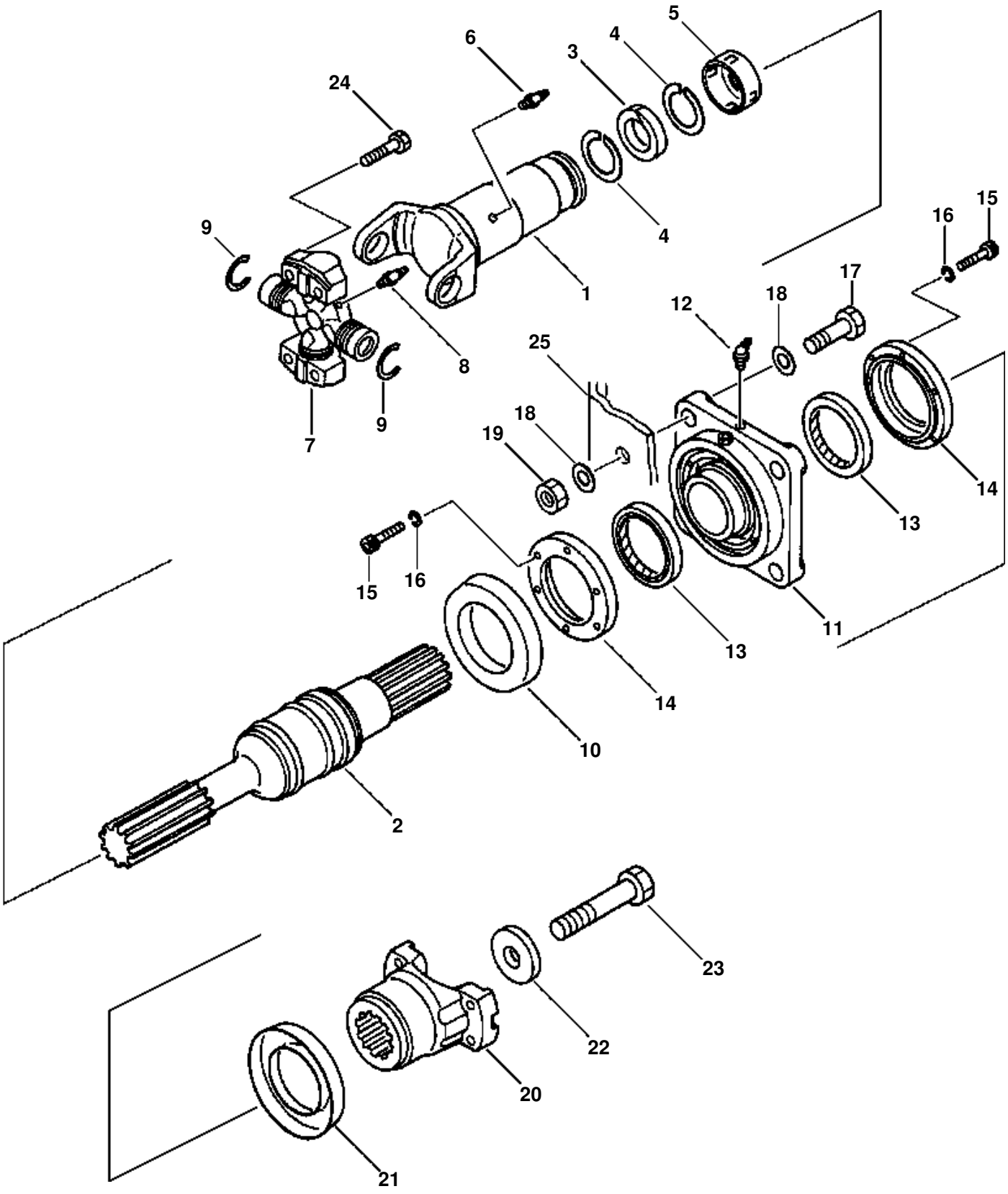
5
6
4
3
24
4
9
1
15
16
17
12
18
8
25
9
7
18
19
14
13
15
16
11
13
14
10
2
23
22
20
21

FRONT DRIVE SHAFT

ITEM NO.	PART NO.	DESCRIPTION	Q'TY
	419-20-13011	DRIVE SHAFT ASSEMBLY, FRONT	1
	419-20-13113	・ DRIVE SHAFT	1
	419-20-13650	・・ YOKE AND SHAFT ASSEMBLY	1
1	419-20-13720	・・・ YOKE	1
2	419-20-13730	・・・ SHAFT	1
3	419-20-13661	・・・ SEAL	1
4	419-20-13671	・・・ RETAINER	2
5	419-20-12681	・・・ COVER	1
6	419-20-12640	・・・ FITTING, GREASE	1
7	419-20-12621	・・ SPIDER ASSEMBLY	1
8	419-20-12640	・・ FITTING, GREASE	1
9	419-20-12691	・・ RING, SNAP	2
10	419-20-13530	・ DEFLECTOR	1
11	419-20-15113	BEARING, FLANGE	1
12	419-20-15660	・ FITTING, GREASE	1
13	419-20-15620	・ SEAL	2
14	419-20-15630	・ COVER	2
15	01252-40620	・ BOLT	12
16	01602-20619	・ WASHER, SPRING	12
17	01010-31660	BOLT	4
18	01643-31645	WASHER	8
19	01580-01613	NUT	4
	419-20-13030	COUPLING ASSEMBLY	1
20	419-20-13512	・ COUPLING	1
21	419-20-13530	・ DEFLECTOR	1
22	423-22-11240	HOLDER	1
23	01011-61615	BOLT	1
24	01050-61045	BOLT	4
25		FRONT FRAME (SEE PG 05-002)	

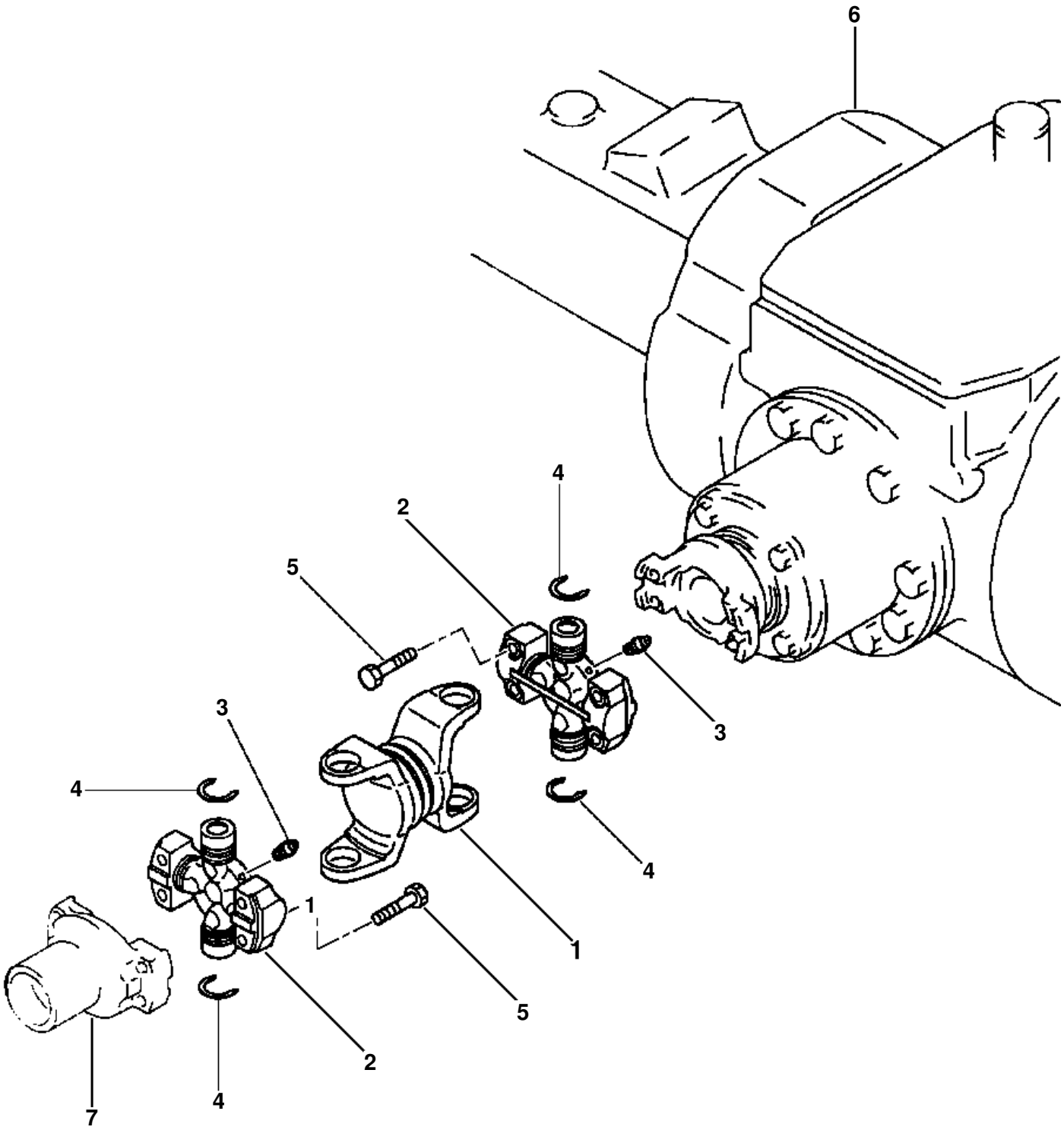
6
4
2
5
3
3
4
4
1
1
5
2
4
7

REAR DRIVE SHAFT

ITEM NO.	PART NO.	DESCRIPTION	Q'TY
	419-20-14114	DRIVE SHAFT ASSEMBLY, REAR	1
1	419-20-14650	· YOKE	1
2	419-20-12621	· SPIDER ASSEMBLY	2
3	419-20-12630	· FITTING, GREASE	2
4	419-20-12961	· RING, SNAP	4
5	01050-61045	· BOLT	8
6		DIFFERENTIAL, REAR (SEE PG 03-018)	
7	419-15-13071	COUPLING, TRANSMISSION REAR	1

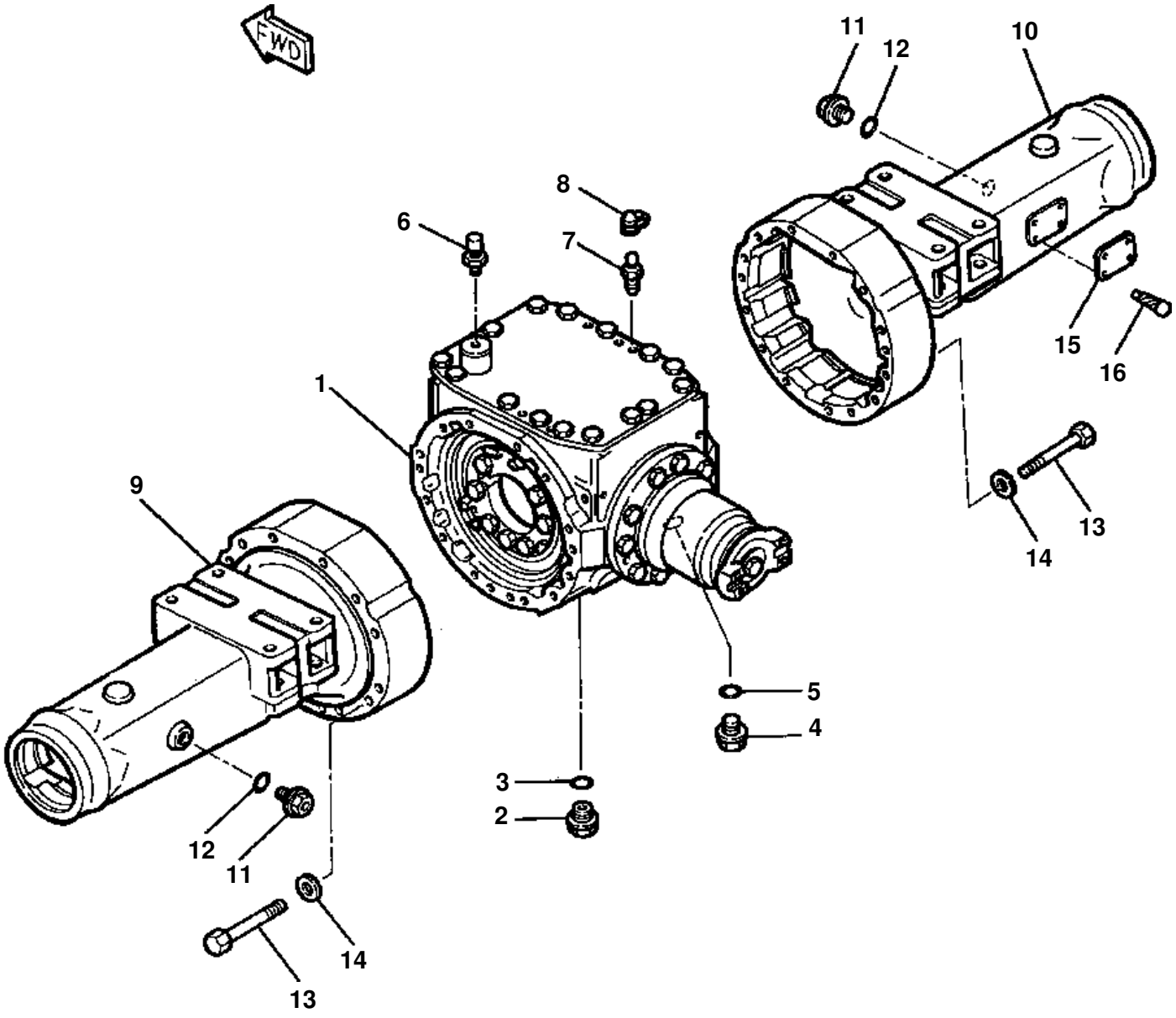
FWD
11
12
10
8
6
7
15
16
1
9
13
14
5
4
3
2
12
11
14
13

FRONT AXLE HOUSING

ITEM NO.	PART NO.	DESCRIPTION	Q'TY
	419-22-10004	AXLE ASSEMBLY, FRONT	1
1		· DIFFERENTIAL ASSEMBLY, FRONT (SEE PG 03-010)	
2	07044-13620	· PLUG, DRAIN	1
3	07002-03634	· O-RING	1
4	419-22-13140	· PLUG	2
5	07002-03034	· O-RING	2
6	07030-01030	· BREATHER	1
7	419-33-11460	· BLEEDER	2
8	566-32-11620	· CAP	2
9	419-22-13223	· HOUSING, LH	1
10	419-22-13213	· HOUSING, RH	1
11	419-22-13140	· PLUG	3
12	07002-03034	· O-RING	3
13	01011-61645	· BOLT	32
14	01643-31645	· WASHER	32
15	22X-22-13171	· PLATE, NAME (LIMITED SUPPLY)	1
16	04418-03060	· SCREW	4

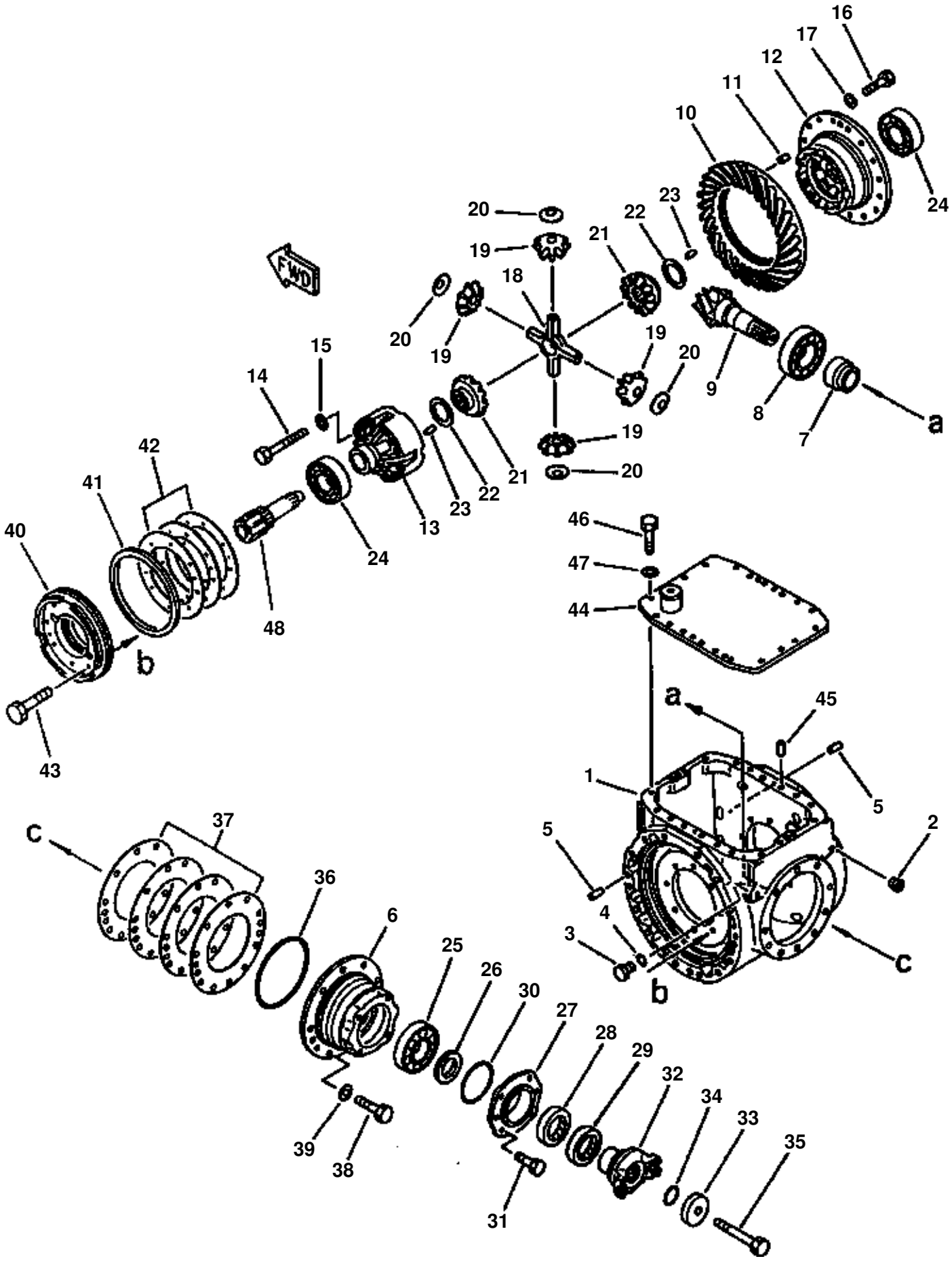
FWD
1
2
3
4
5
6
7
8
9
10
11
12
13
14
15
16
17
18
19
20
21
22
23
24
25
26
27
28
29
30
31
32
33
34
35
36
37
38
39
40
41
42
43
44
45
46
47
48
a
b
c

FRONT DIFFERENTIAL

ITEM NO.	PART NO.	DESCRIPTION	Q'TY
	419-22-11023	DIFFERENTIAL ASSEMBLY, FRONT	1
1	419-22-13113	· HOUSING	1
2	07043-50211	· PLUG	2
3	07040-11209	· PLUG	2
4	07002-01223	· O-RING	2
5	04020-01228	· PIN, DOWEL	4
6	419-22-11131	· CAGE	1
7	419-22-11860	· SPACER	1
8	419-22-11810	· BEARING	1
	419-22-11202	· GEAR ASSEMBLY, PINION	1
9	(NSS)	· · GEAR, PINION	1
10	(NSS)	· · GEAR, RING	1
11	04020-01228	· PIN, DOWEL	2
	419-22-11500	· CASE ASSEMBLY, DIFFERENTIAL	1
12	(NSS)	· · CASE, DIFFERENTIAL - FLANGED HALF	1
13	(NSS)	· · CASE, DIFFERENTIAL - PLAIN HALF	1
14	01010-61295	· · BOLT	12
15	01643-31232	· · WASHER	12
16	01010-61240	· BOLT	16
17	01643-31232	· WASHER	16
18	419-22-11411	· SHAFT	1
19	419-22-11420	· PINION	4
20	419-22-11650	· WASHER	4
21	419-22-11432	· GEAR	2
22	419-22-11631	· WASHER	2
23	175-21-12180	· PIN	4
24	419-22-11850	· BEARING	2
25	419-22-11820	· BEARING	1
26	419-22-11250	· SPACER	1
27	419-22-11312	· RETAINER	1
28	07012-00068	· SEAL	1
29	419-22-11760	· SEAL	1
30	07000-02120	· O-RING	1
31	01010-61225	· BOLT	4
32	419-22-11232	· COUPLING	1
33	423-22-11240	· HOLDER	1
34	07000-03042	· O-RING	1
35	01011-61615	· BOLT	1
36	07000-05180	· O-RING	1
37	419-22-11361	· SHIM - 0.05mm	2
	419-22-11371	· SHIM - 0.2mm	2
	419-22-11381	· SHIM - 0.3mm	2
	419-22-11391	· SHIM - 0.8mm	1
38	01010-61440	· BOLT	10
39	01643-31445	· WASHER	10
40	419-22-11162	· CARRIER	2
41	419-33-11430	· RING	2
42	419-22-11460	· SHIM - 0.05mm	4
	419-22-11470	· SHIM - 0.2mm	4
	419-22-11480	· SHIM - 0.3mm	2
	419-22-11490	· SHIM - 0.8mm	2
43	01010-61235	· BOLT	16
44	419-22-13122	· COVER	1
45	04020-01228	· PIN, DOWEL	2
46	01010-61235	· BOLT	18
47	01643-31232	· WASHER	18
48		SHAFT (SEE PG 03-014)	

FIG 07HHW320.001 FINAL DRIVE & WHEEL BRAKE (FRONT)

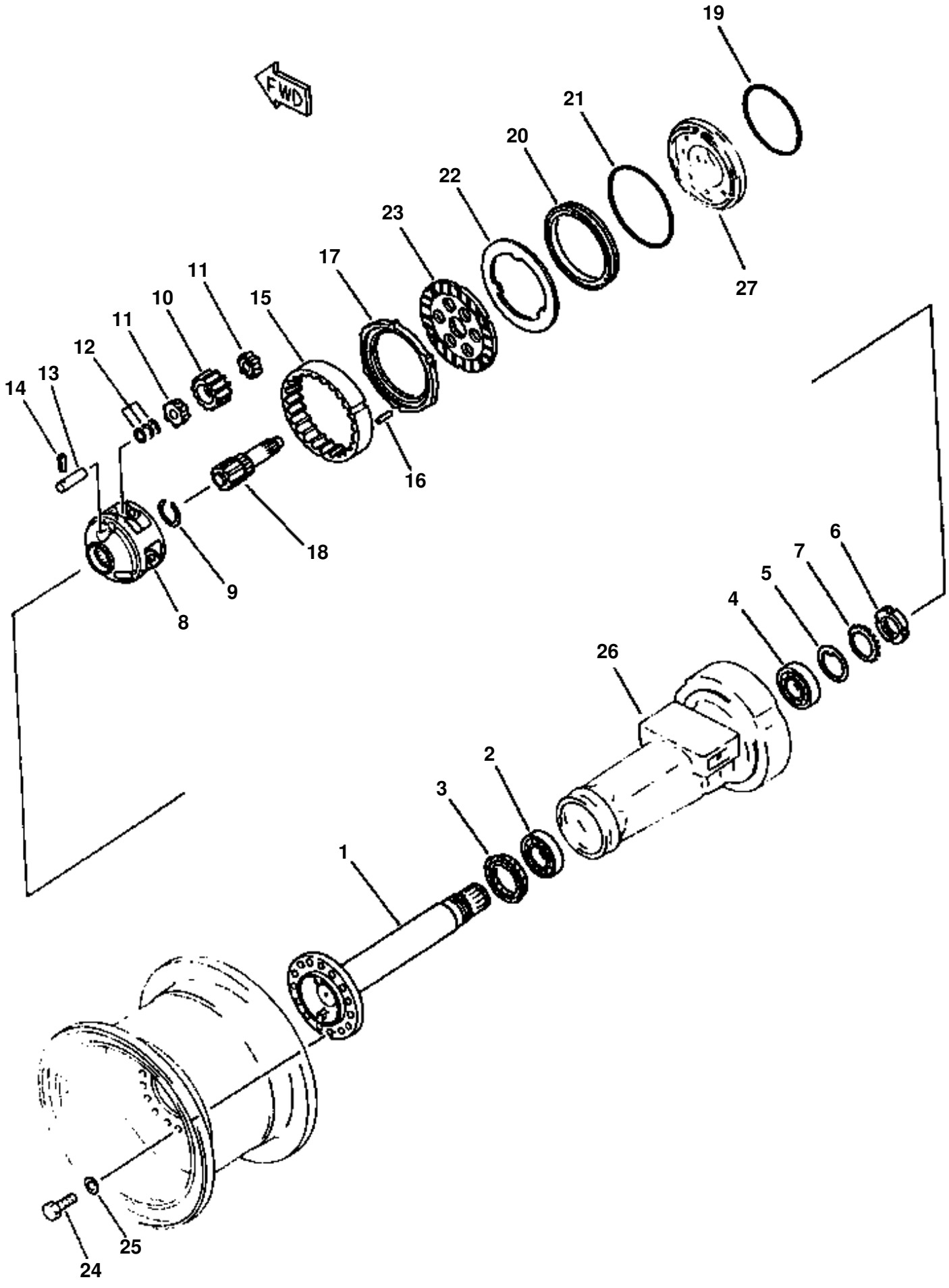

FINAL DRIVE & WHEEL BRAKE (FRONT)

ITEM NO.	PART NO.	DESCRIPTION	Q'TY
		AXLE ASSEMBLY, FRONT (SEE PG 03-008)	
1	419-22-12411	· SHAFT	2
2	419-22-12850	· BEARING	2
3	419-22-12460	· SEAL	2
4	419-22-12840	· BEARING	2
5	419-22-12650	· WASHER	2
6	419-22-12630	· NUT	2
7	419-22-12641	· WASHER	2
8	419-22-12611	· CARRIER	2
9	419-22-12470	· RING	2
10	419-22-12532	· GEAR	6
11	419-22-12811	· BEARING, CONE	12
12	419-22-12260	· SHIM - 1.0mm	3
	419-22-12270	· SHIM - 1.2mm	3
	419-22-12280	· SHIM - 1.4mm	3
13	419-22-12510	· SHAFT	6
14	419-22-12570	· PIN	6
15	419-22-12541	· GEAR	2
16	419-22-12581	· PIN	6
17	419-33-11263	· PLATE	2
18	419-22-12422	· SHAFT	2
19	419-33-11420	· O-RING	2
20	419-33-11120	· PISTON	2
21	419-33-11410	· O-RING	2
22	419-33-11252	· PLATE	2
23	419-33-11243	· DISC	2
24	419-22-12870	· BOLT	30
25	01643-32460	· WASHER	30
26		· HOUSING, LH AXLE (SEE PG 03-008)	
		· HOUSING, RH AXLE (SEE PG 03-008)	
27		· CARRIER, FRONT AXLE (SEE PG 03-010)	

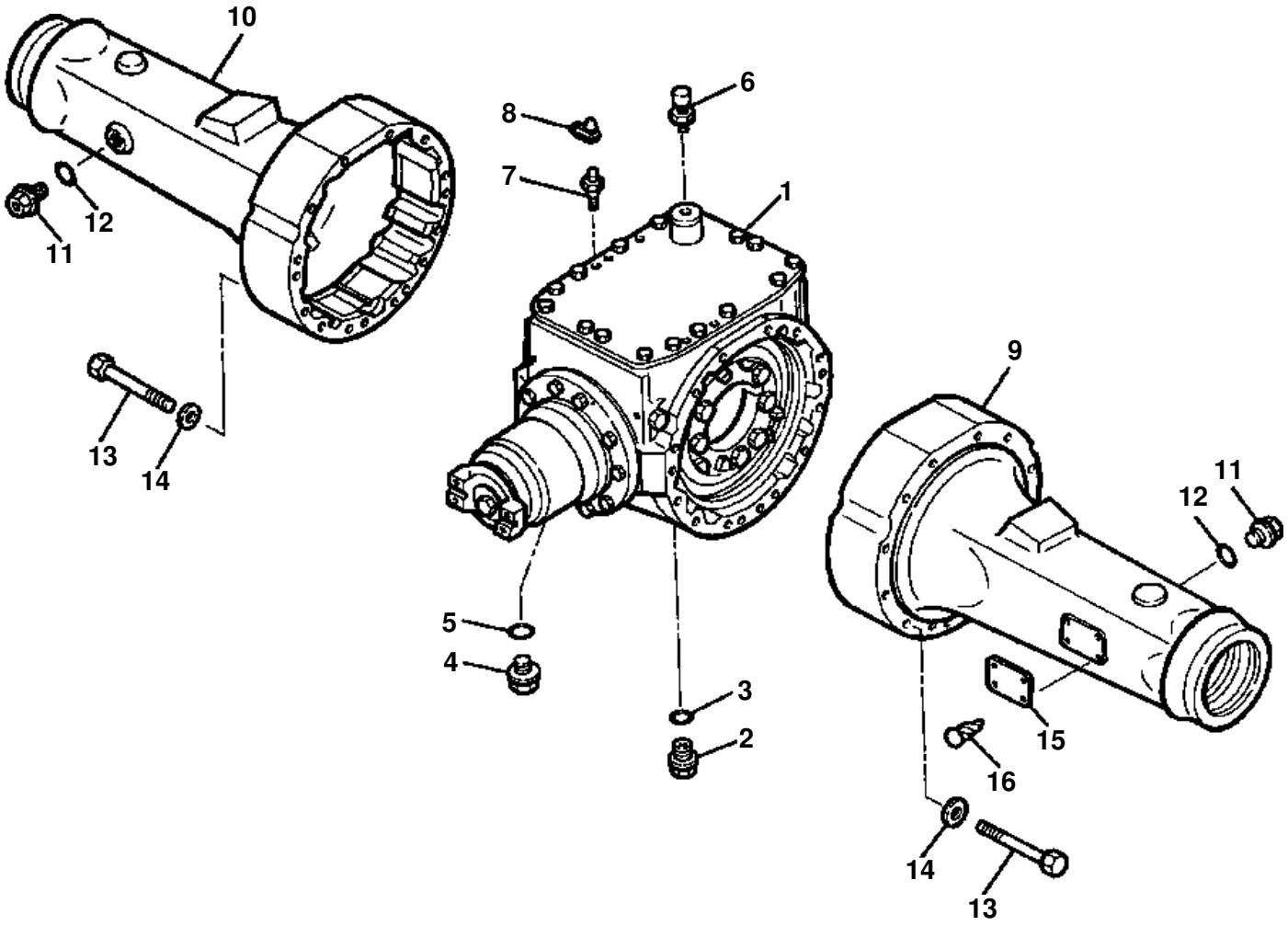
10
12
11
13
14
8
6
7
1
5
4
3
2
9
11
12
15
16
14
13

REAR AXLE HOUSING

ITEM NO.	PART NO.	DESCRIPTION	Q'TY
	419-23-10006	AXLE ASSEMBLY, REAR	1
1		· DIFFERENTIAL ASSEMBLY, REAR (SEE PG 03-018)	
2	07044-13620	· PLUG, DRAIN	1
3	07002-03634	· O-RING	1
4	419-22-13140	· PLUG	2
5	07002-03034	· O-RING	2
6	07030-01030	· BREATHER	1
7	419-33-11460	· BLEEDER	2
8	566-32-11620	· CAP	2
9	419-23-13213	· HOUSING, LH	1
10	419-23-13223	· HOUSING, RH	1
11	419-22-13140	· PLUG	2
12	07002-03034	· O-RING	2
13	01011-61645	· BOLT	32
14	01643-31645	· WASHER	32
15	22X-22-13171	· PLATE, NAME (LIMITED SUPPLY)	1
16	04418-03060	· SCREW	4

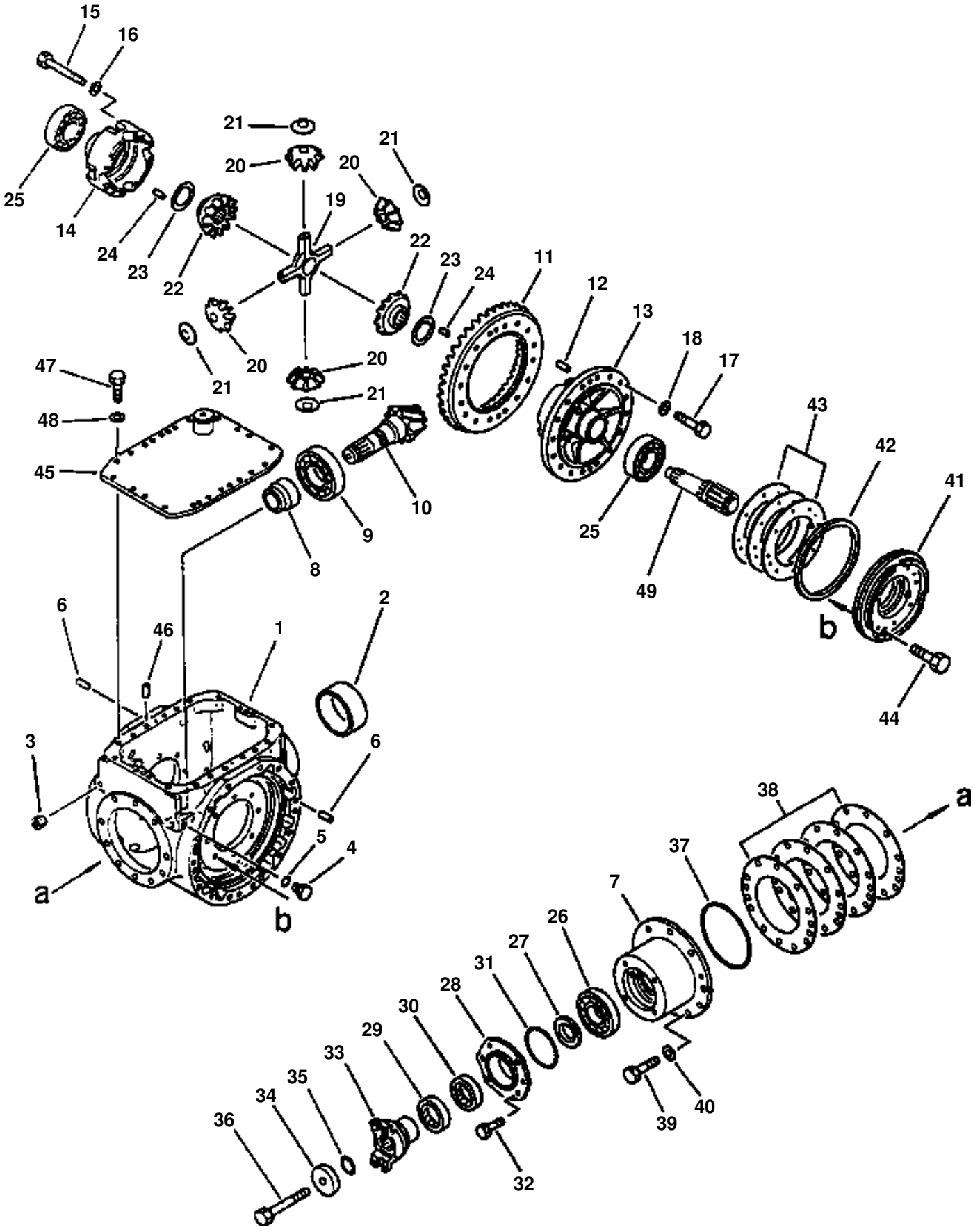
15
16
25
14
24
23
22
21
20
19
20
21
22
23
24
11
12
13
18
17
43
42
41
44
47
48
45
21
20
20
21
10
9
8
49
25
6
46
1
2
6
3
5
4
a
b
38
a
37
7
26
27
31
28
30
29
33
35
34
36
32
39
40

REAR DIFFERENTIAL

ITEM NO.	PART NO.	DESCRIPTION	Q'TY
	419-23-11025	DIFFERENTIAL ASSEMBLY, REAR	1
1	419-23-13113	· HOUSING	1
2	419-23-11170	· SLEEVE	1
3	07043-50211	· PLUG	2
4	07040-11209	· PLUG	2
5	07002-01223	· O-RING	2
6	04020-01228	· PIN, DOWEL	4
7	419-23-11134	· CAGE	1
8	419-22-11860	· SPACER	1
9	419-22-11810	· BEARING	1
	419-22-11202	· GEAR ASSEMBLY, PINION	1
10	(NSS)	· · GEAR, PINION	1
11	(NSS)	· · GEAR, RING	1
12	04020-01228	· PIN, DOWEL	2
	419-22-11500	· CASE ASSEMBLY, DIFFERENTIAL	1
13	(NSS)	· · CASE, DIFFERENTIAL - FLANGED HALF	1
14	(NSS)	· · CASE, DIFFERENTIAL - PLAIN HALF	1
15	01010-61295	· · BOLT	12
16	01643-31232	· · WASHER	12
17	01010-61240	· BOLT	16
18	01643-31232	· WASHER	16
19	419-22-11411	· SHAFT	1
20	419-22-11420	· PINION	4
21	419-22-11650	· WASHER	4
22	419-22-11432	· GEAR	2
23	419-22-11631	· WASHER	2
24	175-21-12180	· PIN	4
25	419-22-11850	· BEARING	2
26	419-22-11820	· BEARING	1
27	419-22-11250	· SPACER	1
28	419-22-11312	· RETAINER	1
29	07012-00068	· SEAL	1
30	419-22-11760	· SEAL	1
31	07000-02120	· O-RING	1
32	01010-61225	· BOLT	4
33	419-22-11232	· COUPLING	1
34	423-22-11240	· HOLDER	1
35	07000-03042	· O-RING	1
36	01011-61615	· BOLT	1
37	07000-05180	· O-RING	1
38	419-22-11361	· SHIM - 0.05mm	2
	419-22-11371	· SHIM - 0.2mm	2
	419-22-11381	· SHIM - 0.3mm	2
	419-22-11391	· SHIM - 0.8mm	1
39	01010-61440	· BOLT	10
40	01643-31445	· WASHER	10
41	419-22-11162	· CARRIER	2
42	419-33-11430	· RING	2
43	419-22-11460	· SHIM - 0.05mm	4
	419-22-11470	· SHIM - 0.2mm	4
	419-22-11480	· SHIM - 0.3mm	2
	419-22-11490	· SHIM - 0.8mm	2
44	01010-61235	· BOLT	16
45	419-22-13122	· COVER	1
46	04020-01228	· PIN, DOWEL	2
47	01010-61235	· BOLT	18
48	01643-31232	· WASHER	18
49		SHAFT (SEE PG 03-022)	

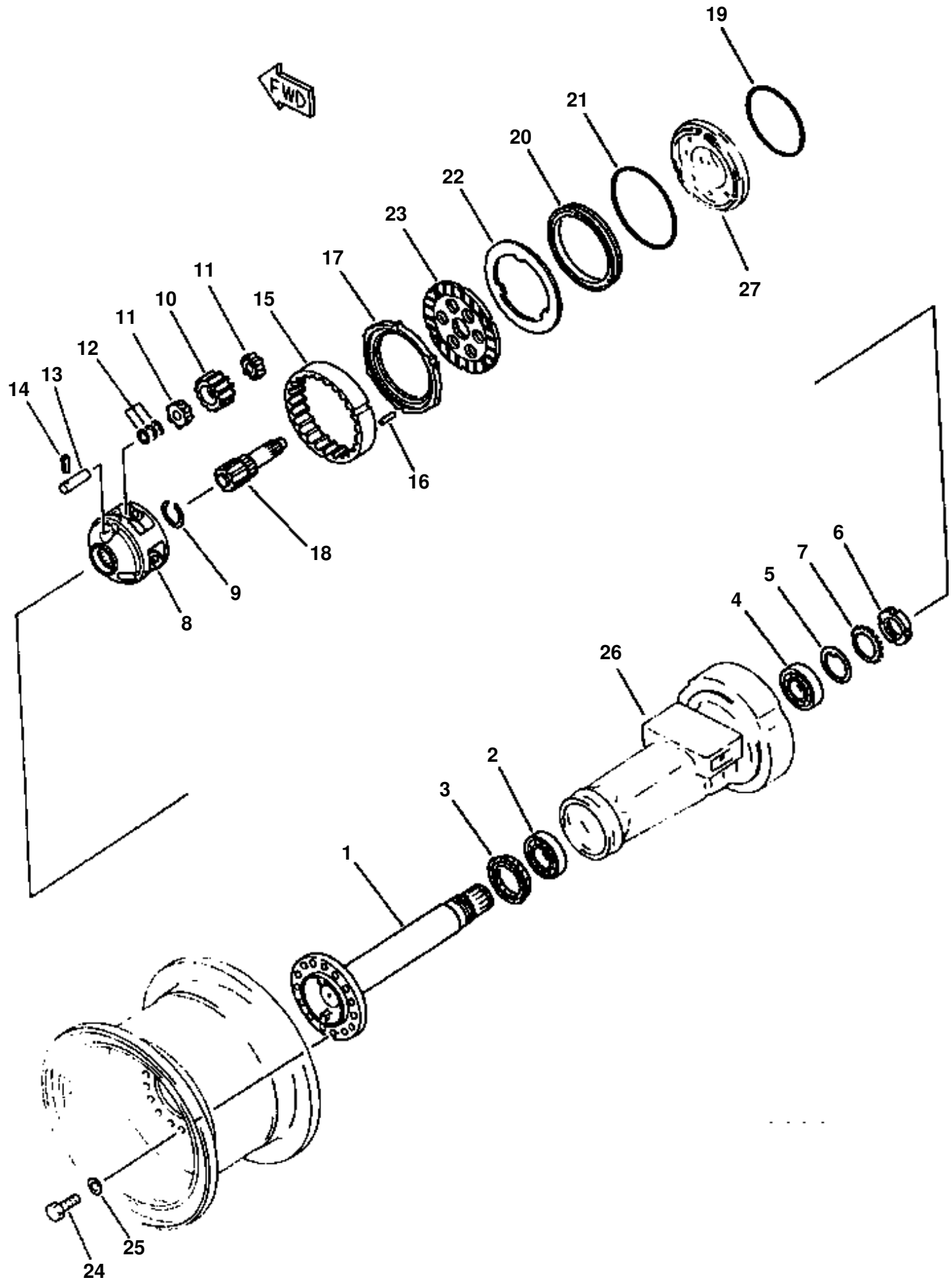
FWD
19
21
20
22
23
17
11
10
11
15
12
13
14
27
16
18
9
8
6
7
5
4
26
2
3
1
25
24

FINAL DRIVE & WHEEL BRAKE (REAR)

ITEM NO.	PART NO.	DESCRIPTION	Q'TY
		AXLE ASSEMBLY, REAR (SEE PG 03-016)	
1	419-22-12411	· SHAFT	2
2	419-22-12850	· BEARING	2
3	419-22-12460	· SEAL	2
4	419-22-12840	· BEARING	2
5	419-22-12650	· WASHER	2
6	419-22-12630	· NUT	2
7	419-22-12641	· WASHER	2
8	419-22-12611	· CARRIER	2
9	419-22-12470	· RING	2
10	419-22-12532	· GEAR	6
11	419-22-12811	· BEARING, CONE	12
12	419-22-12260	· SHIM - 1.0mm	3
	419-22-12270	· SHIM - 1.2mm	3
	419-22-12280	· SHIM - 1.4mm	3
13	419-22-12510	· SHAFT	6
14	419-22-12570	· PIN	6
15	419-22-12541	· GEAR	2
16	419-22-12581	· PIN	6
17	419-33-11263	· PLATE	2
18	419-22-12422	· SHAFT	2
19	419-33-11420	· O-RING	2
20	419-33-11120	· PISTON	2
21	419-33-11410	· O-RING	2
22	419-33-11252	· PLATE	2
23	419-33-11243	· DISC	2
24	419-22-12870	· BOLT	30
25	01643-32460	· WASHER	30
26		· HOUSING, LH AXLE (SEE PG 03-016)	
		· HOUSING, RH AXLE (SEE PG 03-016)	
27		· CARRIER, REAR AXLE (SEE PG 03-018)	

FIG 04AZW250.002 PARKING BRAKE MOUNTING PARTS

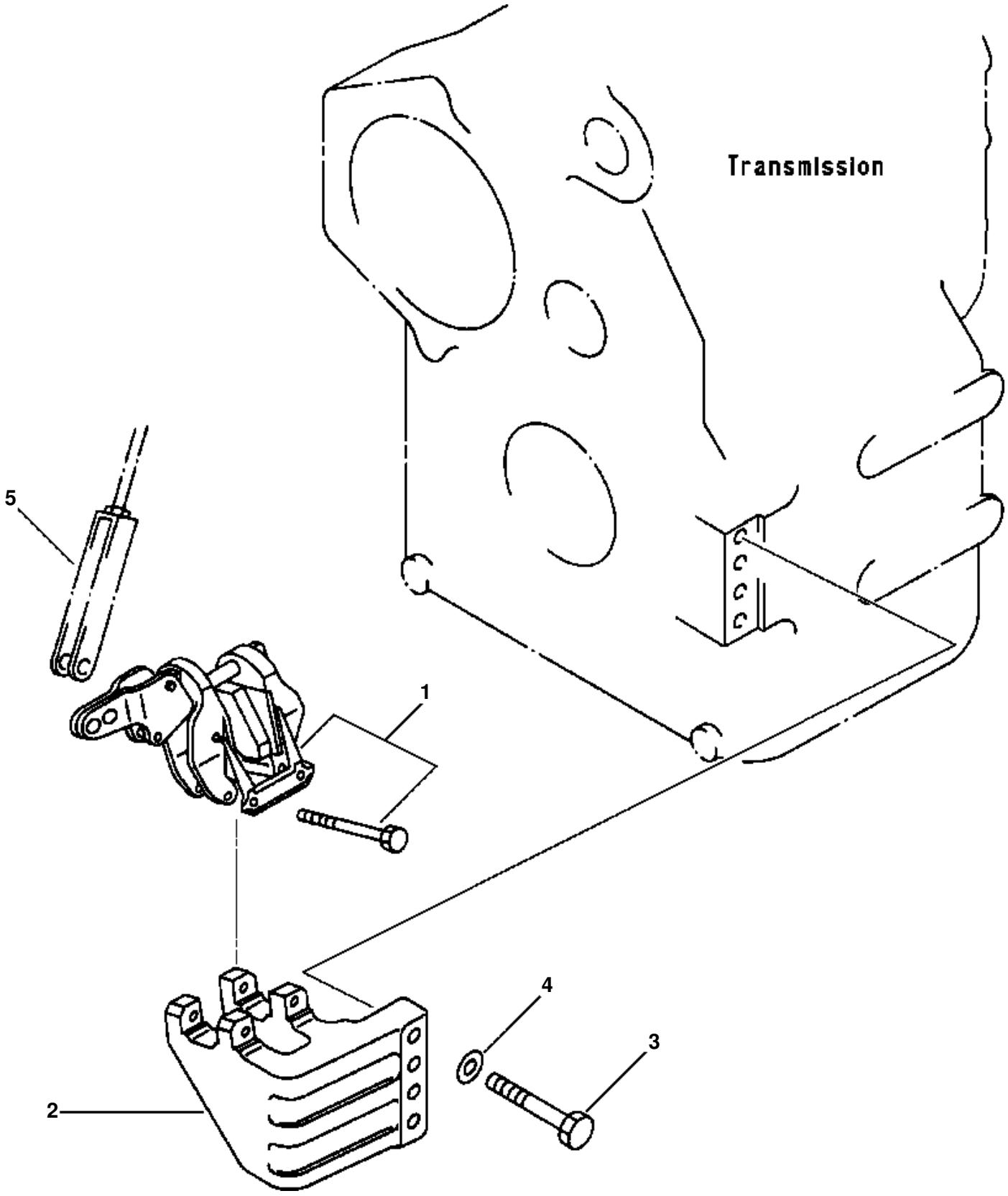

PARKING BRAKE MOUNTING PARTS

ITEM NO.	PART NO.	DESCRIPTION	Q'TY
1		CALIPER, PARKING BRAKE (SEE PG 03-026)	
2	417-22-15130	BRACKET, CALIPER MOUNTING	1
3	01010-31255	BOLT	4
4	01643-31232	WASHER	4
5		CABLE, PARKING BRAKE (SEE PG 03-028)	

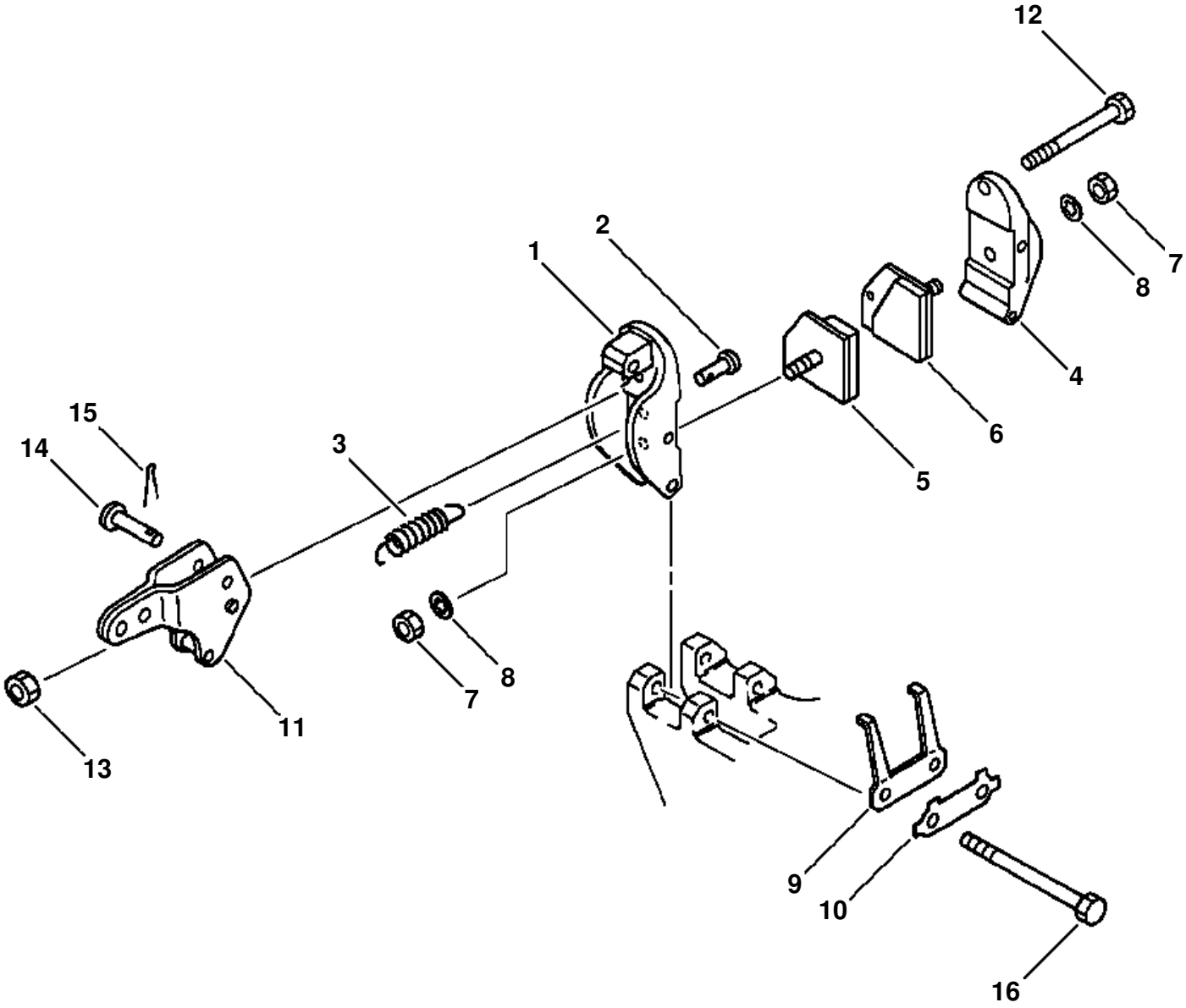
12
7
8
2
1
4
6
5
15
14
3
11
13
7
8
9
10
16

PARKING BRAKE

ITEM NO.	PART NO.	DESCRIPTION	Q'TY	REF
	419-43-15101	CALIPER ASSEMBLY, PARKING BRAKE	1	F1
1	423-43-15870	· CARRIER, INNER PAD	1	
2	423-43-15770	· ANCHOR	1	
3	423-43-15760	· SPRING	1	
4	423-43-15860	· CARRIER, OUTER PAD	1	
	419-43-05110	· KIT, PARKING BRAKE PAD	1	
5	419-43-15910	· · PAD (A)	1	
6	419-43-15920	· · PAD (B)	1	
7	423-43-15840	· · NUT	2	
8	423-43-15830	· · WASHER	2	
9	423-43-15790	· · PLATE, RETRACTION	1	
10	423-43-15850	· · WASHER, TAB	1	
11	423-43-15720	· LEVER	1	
12	423-43-15730	· BOLT, ADJUSTMENT	1	
13	423-43-15740	· NUT	1	
14	423-43-15750	· PIN	1	
15	04050-01610	· PIN, COTTER	1	
16	423-43-15710	· BOLT, CARRIER	2	
		F1 - FOR MOUNTING HARDWARE, SEE PG 03-025		

FIG 04AZW320.001 **PARKING BRAKE CONTROL**

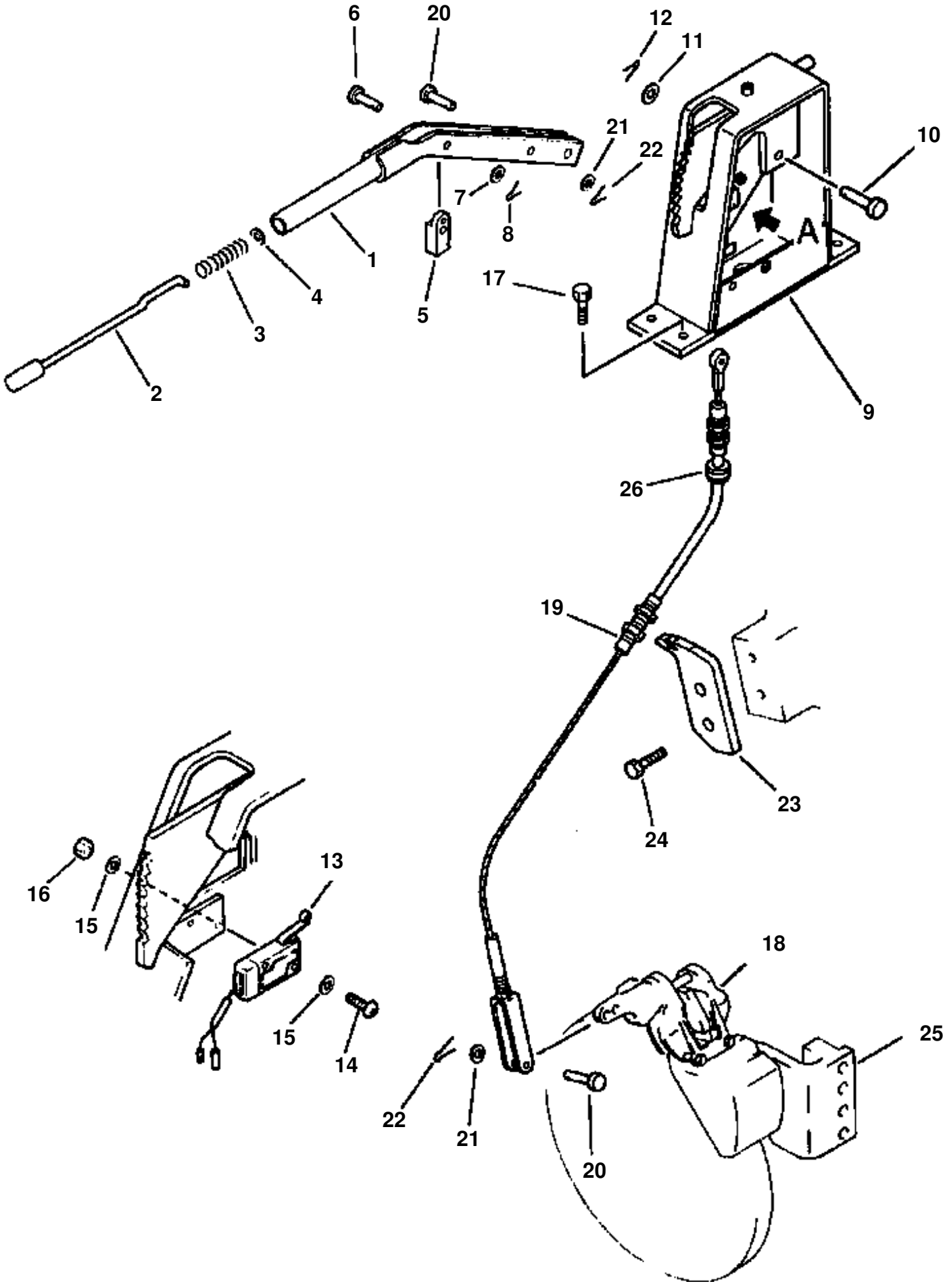

PARKING BRAKE CONTROL

ITEM NO.	PART NO.	DESCRIPTION	Q'TY
	419-22-16105	CONTROL ASSEMBLY, PARKING BRAKE	1
1	419-22-16170	· LEVER	1
2	419-22-16110	· KNOB	1
3	419-22-16120	· SPRING	1
4	419-22-16130	· WASHER	1
5	419-22-16150	· PAWL	1
6	04205-11035	· PIN	1
7	01641-21016	· WASHER	1
8	04050-13020	· PIN, COTTER	1
9	419-22-16165	· BRACKET	1
N/I	01580-00806	· · NUT	1
	01580-00605	· · NUT	3
	08036-40614	· · CLIP	1
	02215-10710	· · NUT	1
10	04205-11238	· PIN	1
11	01641-21223	· WASHER	1
12	04050-13022	· PIN, COTTER	1
13	419-06-11310	SWITCH, PARKING BRAKE	1
14	01220-40316	SCREW	2
15	01641-20305	WASHER	4
16	01580-10302	NUT	2
17	01435-01230	BOLT	4
18		CALIPER ASSEMBLY, BRAKE (SEE PG 03-026)	
19	419-22-16322	CABLE, PARKING BRAKE	1
20	04205-11038	PIN	2
21	01641-21016	WASHER	2
22	04050-13020	PIN, COTTER	2
23	419-22-16310	BRACKET	1
24	01435-01235	BOLT	2
25		BRACKET, CALIPER MOUNTING (SEE PG 03-024)	
26	08037-02512	GROMMET	2

FIG 15ARW320.001 **TIRES AND WHEELS 17.5 X 25**

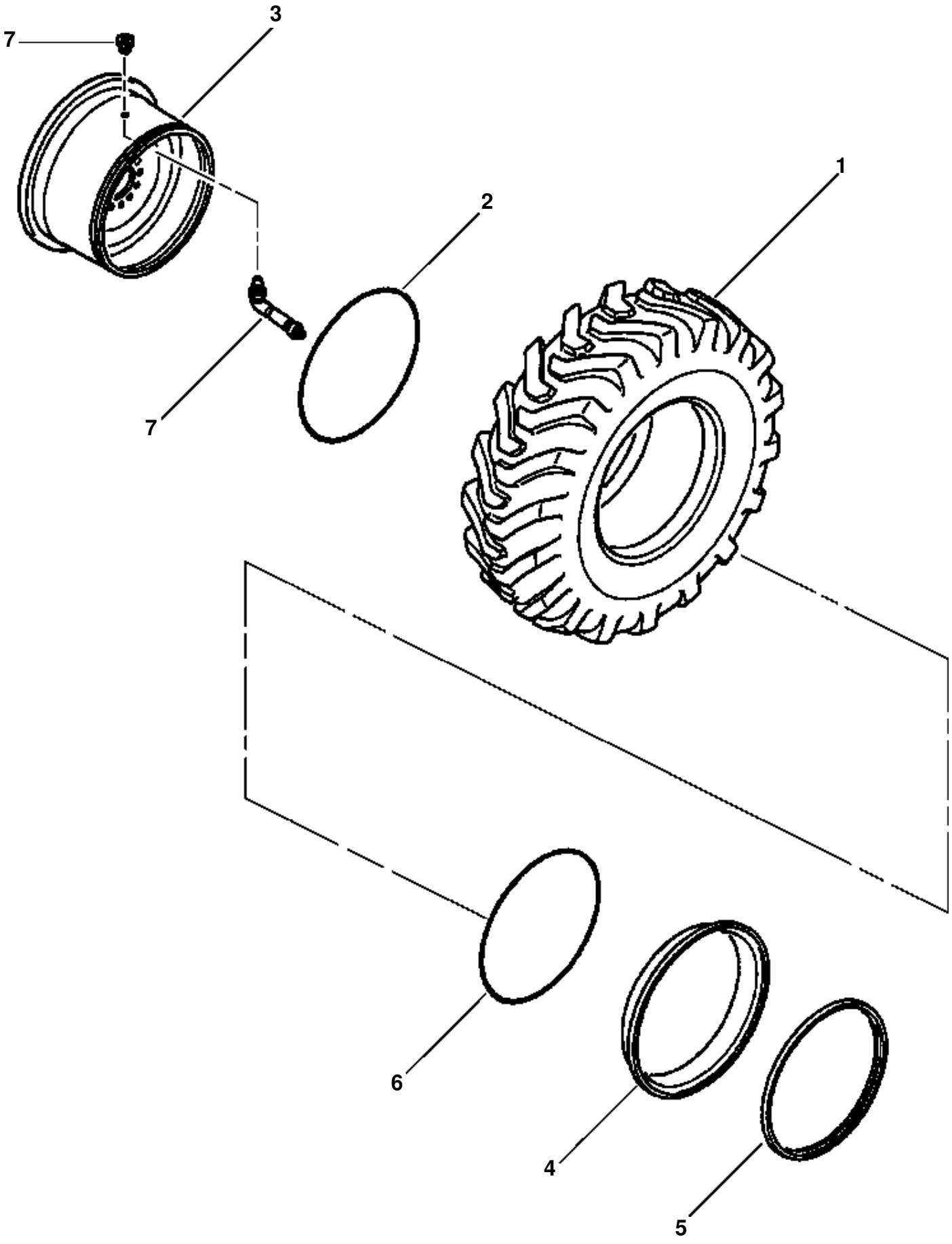

TIRES AND WHEELS 17.5 X 25

ITEM NO.	PART NO.	DESCRIPTION	Q'TY	REF
1	419-X13-1110	TIRE, 17.5 X 25, 12 PLY - L2 (BRIDGESTONE)	4	F1
	419-X13-1210	TIRE, 17.5 X 25, 12 PLY - L2 (TOYO)	4	F1
	419-X13-1310	TIRE, 17.5 X 25, 12 PLY - L2 (YOKOHAMA)	4	F1
	419-X13-A110	TIRE, 17.5 X 25, 12 PLY - L2 (GOODYEAR)	4	F1
1	419-X14-1110	TIRE, 17.5 X 25, 12 PLY - L3 (BRIDGESTONE)	4	F1
	419-X14-1210	TIRE, 17.5 X 25, 12 PLY - L3 (TOYO)	4	F1
	419-X14-1310	TIRE, 17.5 X 25, 12 PLY - L3 (YOKOHAMA)	4	F1
	419-X14-A110	TIRE, 17.5 X 25, 12 PLY - L3 (GOODYEAR)	4	F1
2	419-30-11630	O-RING	4	
	419-W25-1101	RIM ASSEMBLY	4	
3	419-W25-1111	· BASE, WHEEL	1	
4	419-W25-1120	· FLANGE, SIDE	1	
5	418-30-11130	· RING, LOCK	1	
6	145 395 H1	O-RING	4	
7	613 807 C91	VALVE	4	
	171 692 H1	VALVE	4	
		F1 - PURCHASE TIRES LOCALLY.		

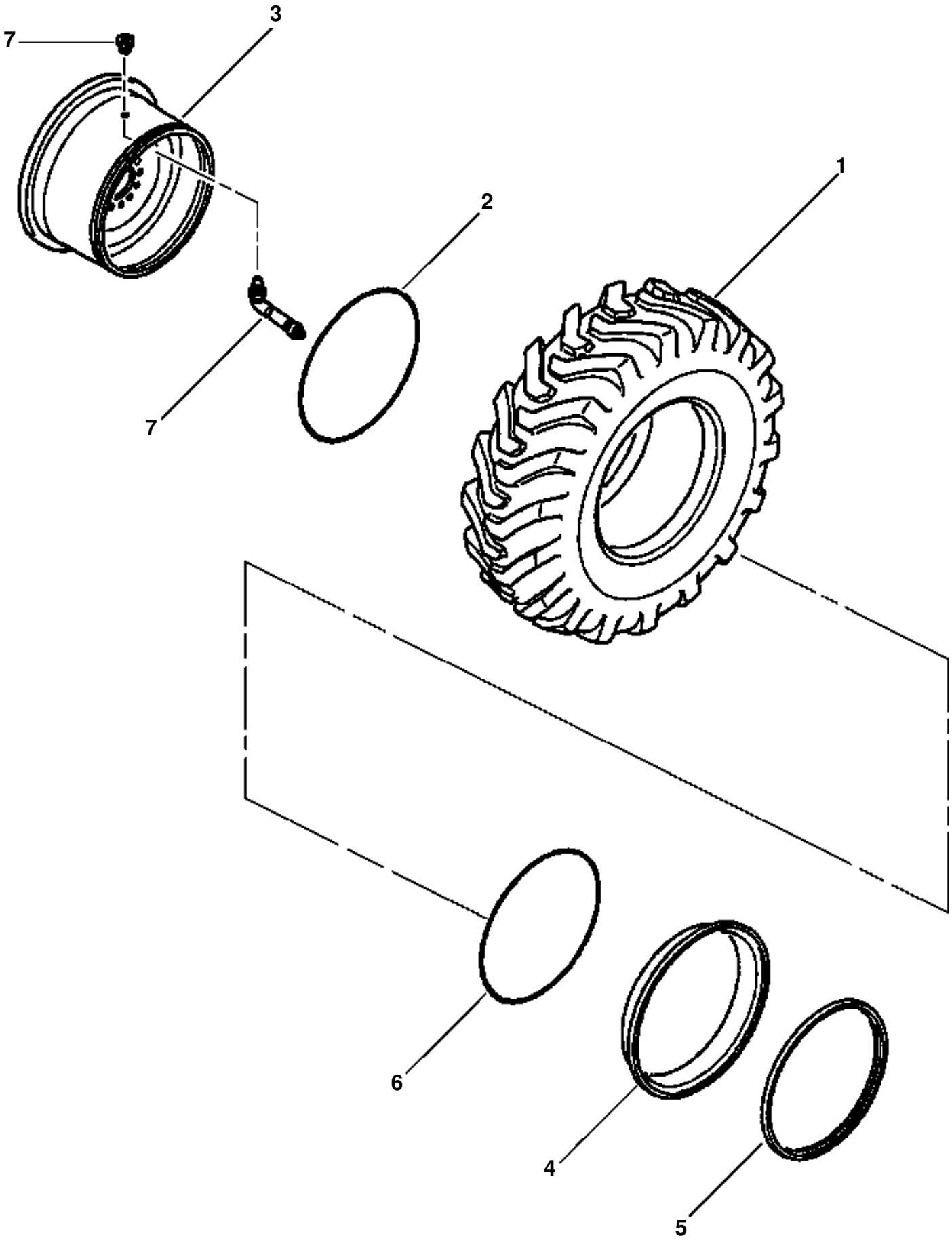
7
3
1
2
7
6
4
5

TIRES AND WHEELS 20.5 X 25

ITEM NO.	PART NO.	DESCRIPTION	Q'TY	REF
1	419-30-11600	TIRE, 20.5 X 25, 12 PLY - L2 (BRIDGESTONE)	4	F1
	419-30-11700	TIRE, 20.5 X 25, 12 PLY - L2 (TOYO)	4	F1
	419-30-11610	TIRE, 20.5 X 25, 12 PLY - L2 (YOKOHAMA)	4	F1
	419-30-A1110	TIRE, 20.5 X 25, 12 PLY - L2 (GOODYEAR)	4	F1
1	419-X17-1110	TIRE, 20.5 X 25, 12 PLY - L3 (BRIDGESTONE)	4	F1
	419-X17-1210	TIRE, 20.5 X 25, 12 PLY - L3 (TOYO)	4	F1
	419-X17-1310	TIRE, 20.5 X 25, 12 PLY - L3 (YOKOHAMA)	4	F1
	419-X17-A110	TIRE, 20.5 X 25, 12 PLY - L3 (GOODYEAR)	4	F1
1	423-30-11610	TIRE, 20.5 X 25-16 PRL2 (BRIDGESTONE)	4	F1
	423-30-11620	TIRE, 20.5 X 25-16 PRL2 (TOYO)	4	F1
	423-30-11630	TIRE, 20.5 X 25-16 PRL2 (YOKOHAMA)	4	F1
	423-30-A1110	TIRE, 20.5 X 25-16 PRL2 (GOODYEAR)	4	F1
1	1282 334 H1	TIRE, MICH. 20.5 X 25 XHAT L3	4	F1
	419-30-A1220	TIRE, 20.5 X 25 XGLA L2	4	F1
	419-30-A1210	TIRE, 20.5 X 25 XRBT E3	4	F1
2	419-30-11630	O-RING	4	
	419-30-11801	RIM ASSEMBLY	4	
3	419-30-11821	· BASE, WHEEL	1	
4	419-30-11130	· FLANGE, SIDE	1	
5	419-30-11140	· RING, LOCK	1	
6	145 395 H1	O-RING	4	
7	613 807 C91	VALVE	4	
	171 692 H1	VALVE	4	
		F1 - PURCHASE TIRES LOCALLY.		

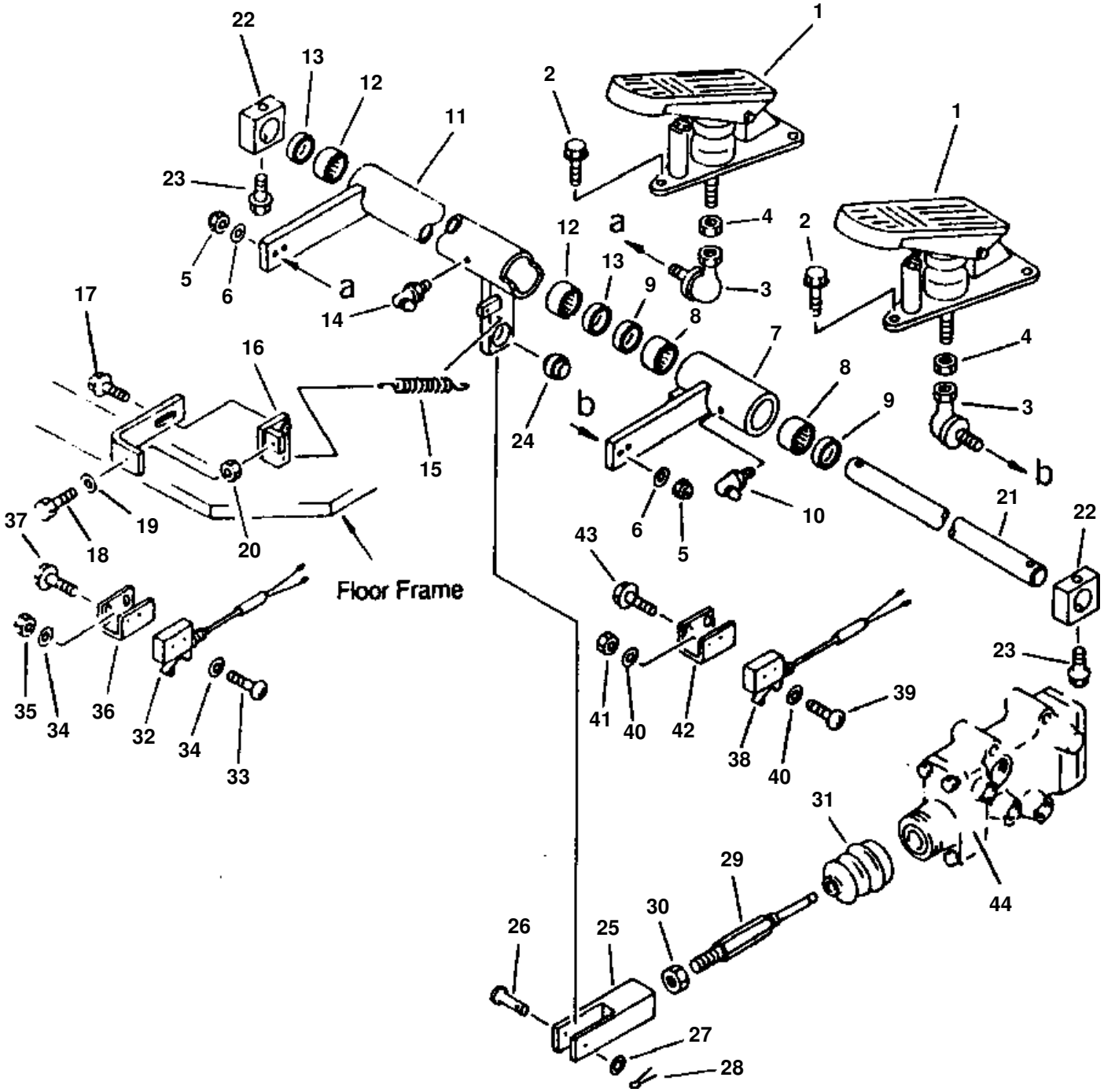
Floor Frame

BRAKE PEDAL & LINKAGE

ITEM NO.	PART NO.	DESCRIPTION	Q'TY
1	419-43-12710	PEDAL, BRAKE	2
N/I	419-43-13480	PAD	1
2	01435-01025	BOLT	6
3	04256-41028	JOINT	2
4	01582-11008	NUT	2
5	426-09-11160	NUT, LOCK	2
6	01643-31032	WASHER	2
7	419-43-12511	LEVER	1
8	06120-03020	BEARING, SEAL	2
9	06122-03004	SEAL, BEARING	2
10	07020-00675	FITTING, GREASE	1
11	419-43-12521	LEVER	1
12	06120-03020	BEARING, NEEDLE	2
13	06122-03004	SEAL, BEARING	2
14	07020-00675	FITTING, GREASE	1
15	234-88-51690	SPRING	1
16	419-43-12790	PLATE	1
17	01435-00820	BOLT	1
18	01016-50850	BOLT	1
19	01643-30823	WASHER	1
20	01580-10806	NUT	1
21	419-43-12530	PIN	1
22	419-43-12540	PLATE	2
23	01435-01270	BOLT	2
24	419-43-17590	BUSHING	1
25	04211-21478	YOKE	1
26	04205-11440	PIN	1
27	01641-21423	WASHER	1
28	04050-14022	PIN, COTTER	1
29	419-43-12560	ROD	1
30	01582-11411	NUT	1
31	419-43-12570	BOOT	1
32	419-06-11324	SWITCH, NEUTRAL	1
N/I	08021-00400	· CONNECTOR	1
33	01220-40430	SCREW	2
34	01641-20405	WASHER	4
35	01580-10403	NUT	2
36	419-43-12580	PLATE	1
37	01435-00820	BOLT	2
38	419-06-11324	SWITCH, STOP LAMP	1
N/I	08021-00400	· CONNECTOR	1
39	01220-40430	SCREW	2
40	01641-20405	WASHER	4
41	01580-10403	NUT	2
42	419-43-12580	PLATE	1
43	01435-00820	BOLT	2
44		VALVE ASSEMBLY, BRAKE (SEE PG 03-046)	

FIG 04AHW320.001 BRAKE OIL PIPING PUMP TO VALVE

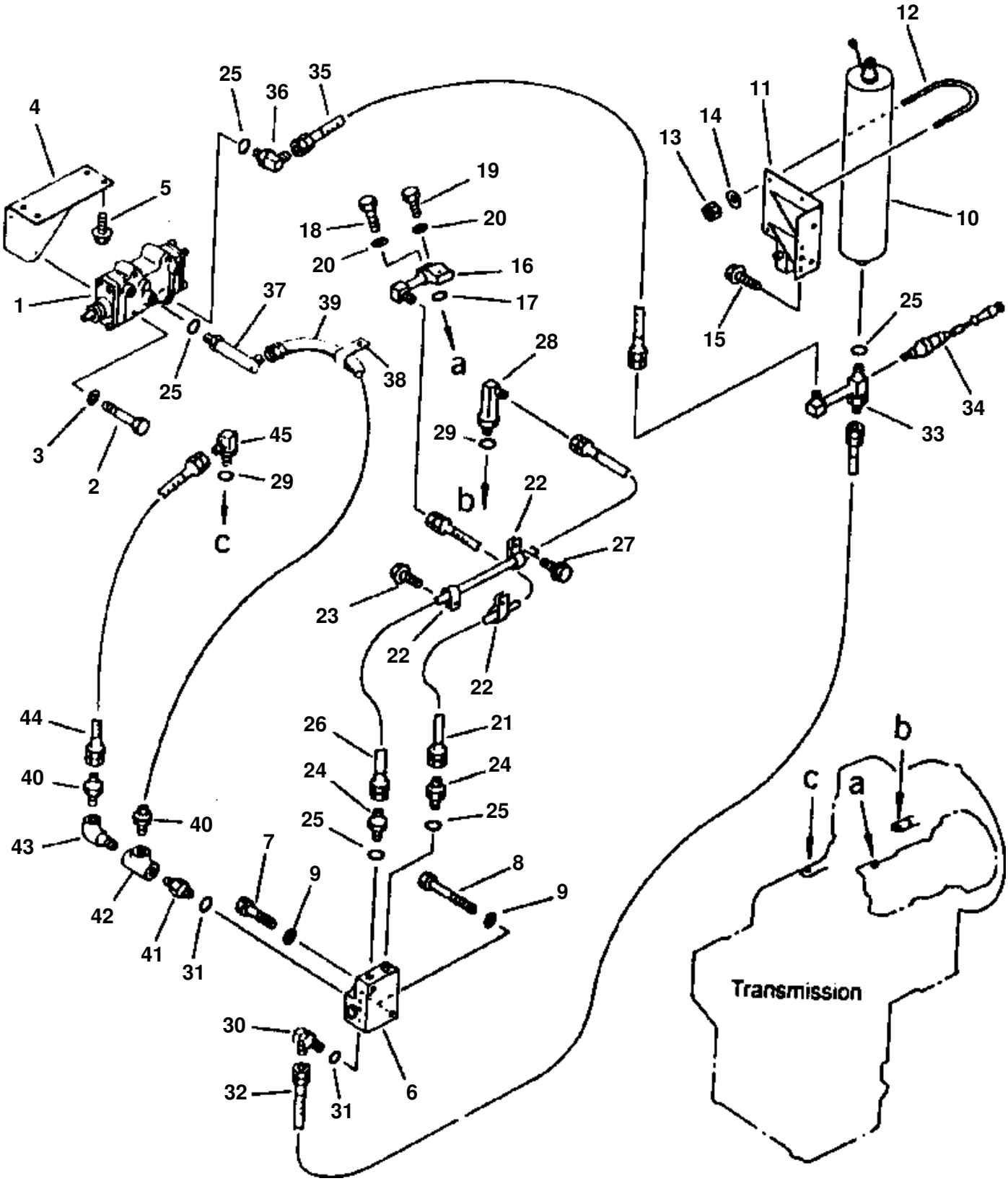

BRAKE OIL PIPING PUMP TO VALVE

ITEM NO.	PART NO.	DESCRIPTION	Q'TY
1		VALVE ASSEMBLY, BRAKE (SEE PG 03-046)	
2	01010-51285	BOLT	3
3	01643-31232	WASHER	3
4	419-43-12590	BRACKET	1
N/I	01580-01210	· NUT	3
5	01435-01020	BOLT	4
6		VALVE ASSEMBLY, RELIEF (SEE PG 03-048)	
7	01010-51065	BOLT	1
8	01010-51095	BOLT	1
9	01643-31032	WASHER	2
10		ACCUMULATOR (SEE PG 03-050)	
11	419-43-12660	BRACKET	1
12	07283-21185	CLIP	2
13	426-43-19150	NUT, LOCKING	4
14	01643-31232	WASHER	4
15	01435-01235	BOLT	3
16	419-43-12610	TUBE	1
N/I	423-62-11150	· ELBOW	1
17	07000-03030	O-RING	1
18	01010-30855	BOLT	2
19	01010-30840	BOLT	2
20	01602-00825	WASHER, SPRING	4
21	07108-20507	HOSE	1
22	08036-22514	CLIP	3
23	01435-01020	BOLT	1
24	20R-62-14330	NIPPLE	2
25	07002-02034	O-RING	5
26	07102-20512	HOSE	1
27	01435-01016	BOLT	1
28	22X-61-16470	ELBOW	1
N/I	01583-12414	· NUT	1
29	07002-02434	O-RING	2
30	07235-10210	ELBOW	1
N/I	01583-12012	· NUT	1
31	07002-01423	O-RING	2
32	07108-20205	HOSE	1
33	419-43-12621	JOINT	1
N/I	01583-12012	· NUT	1
	07241-30422	· ELBOW	1
34	419-06-11460	SWITCH, BRAKE PRESSURE	1
35	419-43-12690	HOSE	1
36	07235-10422	ELBOW	1
37	419-09-11550	ELBOW	1
38	08036-02514	CLIP	1
39	07108-20309	HOSE	1
40	176-62-15490	NIPPLE	2
41	207-62-27110	NIPPLE	1
42	07324-10200	TEE	1
43	07323-30200	ELBOW	1
44	07108-20306	HOSE	1
45	114-62-23210	ELBOW	1
N/I	01583-12414	· NUT	1

FIG 04AHW320.002 BRAKE OIL PIPING VALVE TO FRONT AXLE

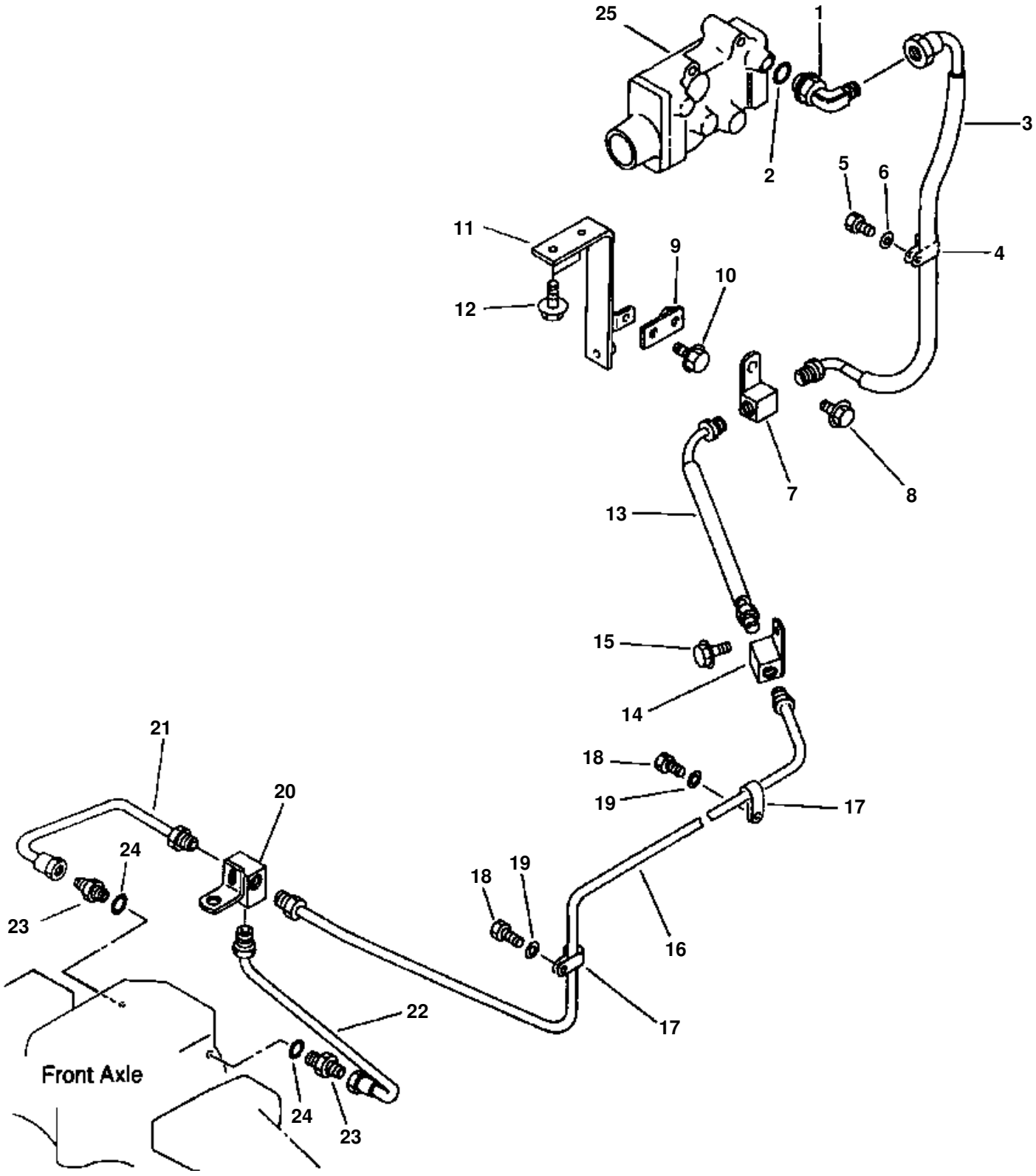

BRAKE OIL PIPING VALVE TO FRONT AXLE

ITEM NO.	PART NO.	DESCRIPTION	Q'TY
1	419-09-11540	ELBOW	1
N/I	01583-12012	· NUT	1
2	07002-02034	O-RING	1
3	419-43-13110	HOSE	1
4	08036-21814	CLIP	1
5	01010-51020	BOLT	1
6	01643-31032	WASHER	1
7	419-43-12460	UNION	1
8	01435-01020	BOLT	1
9	419-43-12490	PLATE	1
N/I	01580-01008	· NUT	1
10	01435-01020	BOLT	1
11	419-43-17121	BRACKET	1
N/I	01580-01008	· NUT	1
	01571-01016	· SEAT	1
12	01435-01020	BOLT	2
13	419-43-13120	HOSE	1
14	419-43-12460	UNION	1
15	01435-01016	BOLT	1
16	419-43-13150	TUBE	1
N/I	419-43-13170	· NUT	2
17	08036-21014	CLIP	2
18	01010-51020	BOLT	2
19	01643-31032	WASHER	2
20	419-43-12480	TEE	1
21	419-43-13210	TUBE	1
N/I	419-43-13180	· NUT	1
	07202-50814	· NUT	1
22	419-43-13230	TUBE	1
N/I	419-43-13180	· NUT	1
	07202-50814	· NUT	1
23	419-43-13190	UNION	2
24	07002-01223	O-RING	2
25		VALVE ASSEMBLY, BRAKE (SEE PG 03-046)	

FIG 04AHW320.003 BRAKE OIL PIPING VALVE TO REAR AXLE

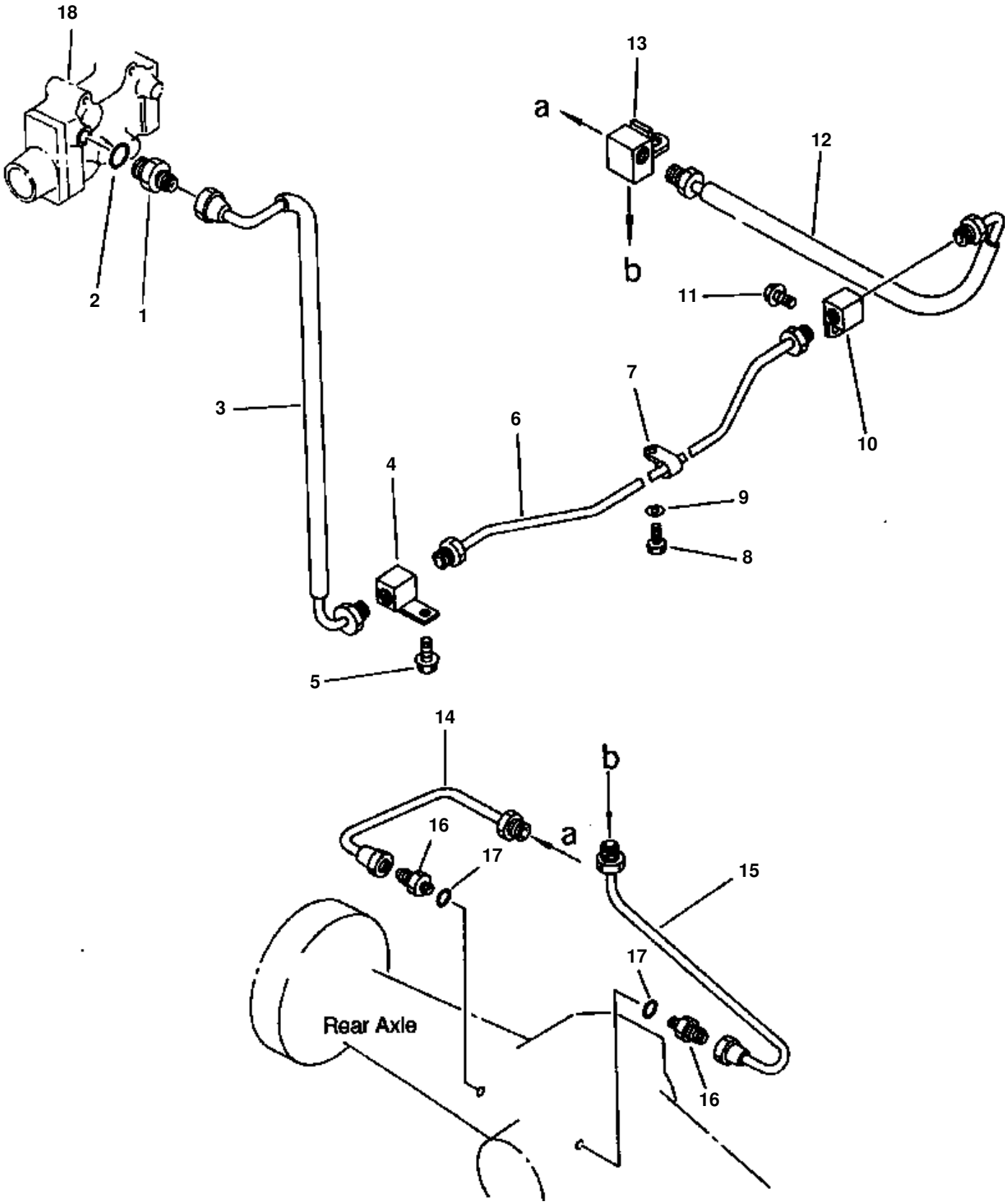

BRAKE OIL PIPING VALVE TO REAR AXLE

ITEM NO.	PART NO.	DESCRIPTION	Q'TY
1	419-09-11530	UNION	1
2	07002-02034	O-RING	1
3	419-43-13130	HOSE	1
4	419-43-12460	UNION	1
5	01435-01016	BOLT	1
6	419-43-13160	TUBE	1
N/I	419-43-13170	· NUT	2
7	08036-21014	CLIP	1
8	01010-51020	BOLT	1
9	01643-31032	WASHER	1
10	419-43-12460	UNION	1
11	01435-01016	BOLT	1
12	419-43-13140	HOSE	1
13	419-43-12470	TEE	1
14	419-43-13210	TUBE	1
N/I	419-43-13180	· NUT	1
	07202-50814	· NUT	1
15	419-43-13220	TUBE	1
N/I	419-43-13180	· NUT	1
	07202-50814	· NUT	1
16	419-43-13190	UNION	2
17	07002-01223	O-RING	2
18		VALVE ASSEMBLY, BRAKE (SEE PG 03-046)	

FIG 04ARW320.001 BRAKE VALVE

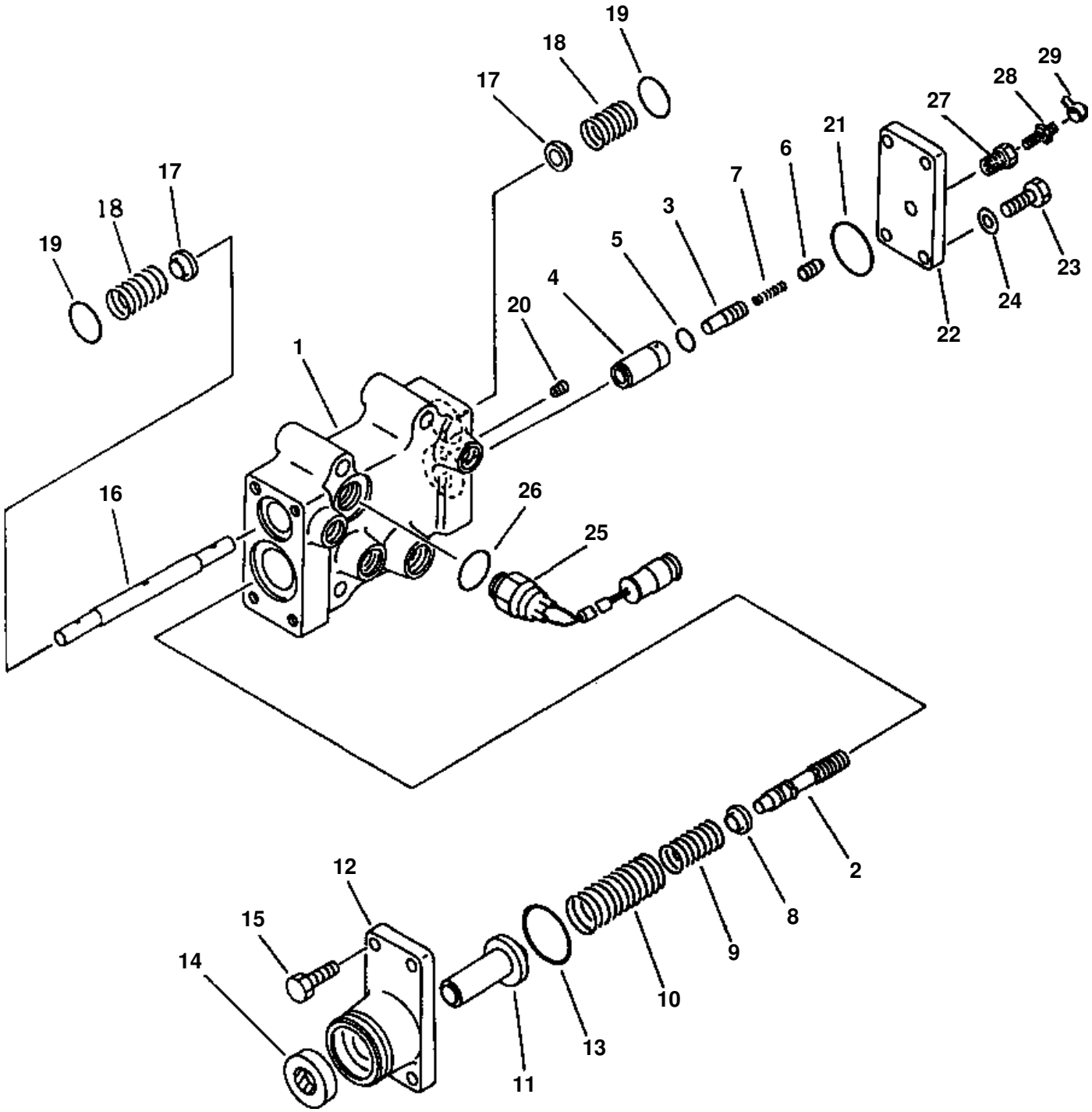

BRAKE VALVE

ITEM NO.	PART NO.	DESCRIPTION	Q'TY
	419-43-12102	VALVE ASSEMBLY, BRAKE	1
1	419-43-12130	· HOUSING	1
2	419-43-12190	· SPOOL	1
3	419-43-12210	· PISTON	1
4	419-43-12230	· SLEEVE	1
5	07000-02016	· O-RING	1
6	419-43-12280	· PISTON	1
7	419-43-12220	· SPRING	1
8	419-43-12180	· RETAINER	1
9	419-43-12160	· SPRING	1
10	419-43-12170	· SPRING	1
11	419-43-12150	· ROD	1
12	419-43-12110	· COVER	1
13	07000-03045	· O-RING	1
14	419-43-12120	· SEAL, OIL	1
15	07372-01040	· BOLT	4
16	419-43-12251	· SPOOL	1
17	419-43-12180	· RETAINER	2
18	419-43-12270	· SPRING	2
19	07000-03028	· O-RING	2
20	419-43-12960	· ORIFICE	1
21	07000-03038	· O-RING	1
22	419-43-12142	· PLATE	1
23	07372-01030	· BOLT	4
24	01643-51032	· WASHER	4
25	421-06-11982	· SWITCH, BRAKE	1
26	07002-02034	· O-RING	1
27	581-32-12140	· PLUG	1
28	566-32-11430	· BLEEDER	1
29	566-32-11620	· CAP	1

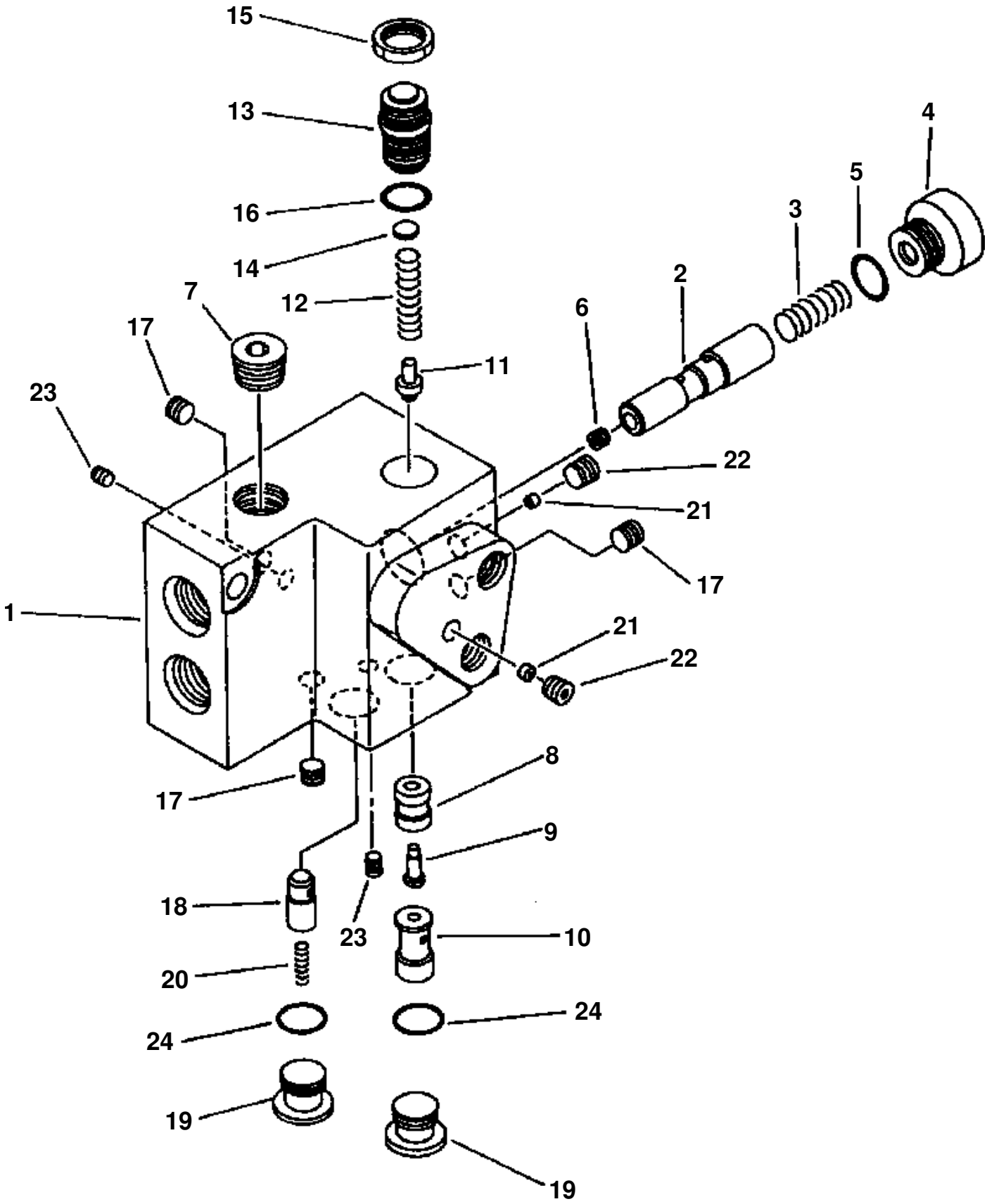
15
13
16
14
12
7
17
23
11
6
2
3
5
4
22
21
17
1
21
22
8
17
9
18
23
10
20
24
24
19
19

UNLOAD RELIEF VALVE

ITEM NO.	PART NO.	DESCRIPTION	Q'TY
	419-43-12300	VALVE ASSEMBLY, UNLOAD RELIEF	1
1	(NSS)	· BODY	1
2	(NSS)	· SPOOL	1
3	419-43-12390	· SPRING	1
4	419-43-12380	· PLUG	1
5	419-43-12420	· O-RING	1
6	(NSS)	· ORIFICE	1
7	(NSS)	· PLUG	1
8	(NSS)	· VALVE, SEAT	1
9	(NSS)	· PISTON	1
10	419-43-12310	· RETAINER	1
11	419-43-12320	· RETAINER & BALL	1
12	419-43-12360	· SPRING	1
13	419-43-12330	· SCREW	1
14	419-43-12350	· SHIM	1
15	419-43-12340	· NUT	1
16	419-43-12430	· O-RING	1
17	(NSS)	· PLUG	3
18	(NSS)	· PLUNGER	1
19	419-43-12410	· PLUG	2
20	419-43-12370	· SPRING	1
21	(NSS)	· ORIFICE	2
22	419-43-12440	· PLUG	2
23	(NSS)	· PLUG	2
24	419-43-13240	· O-RING	2

FIG 10CDW320.001 ACCUMULATOR

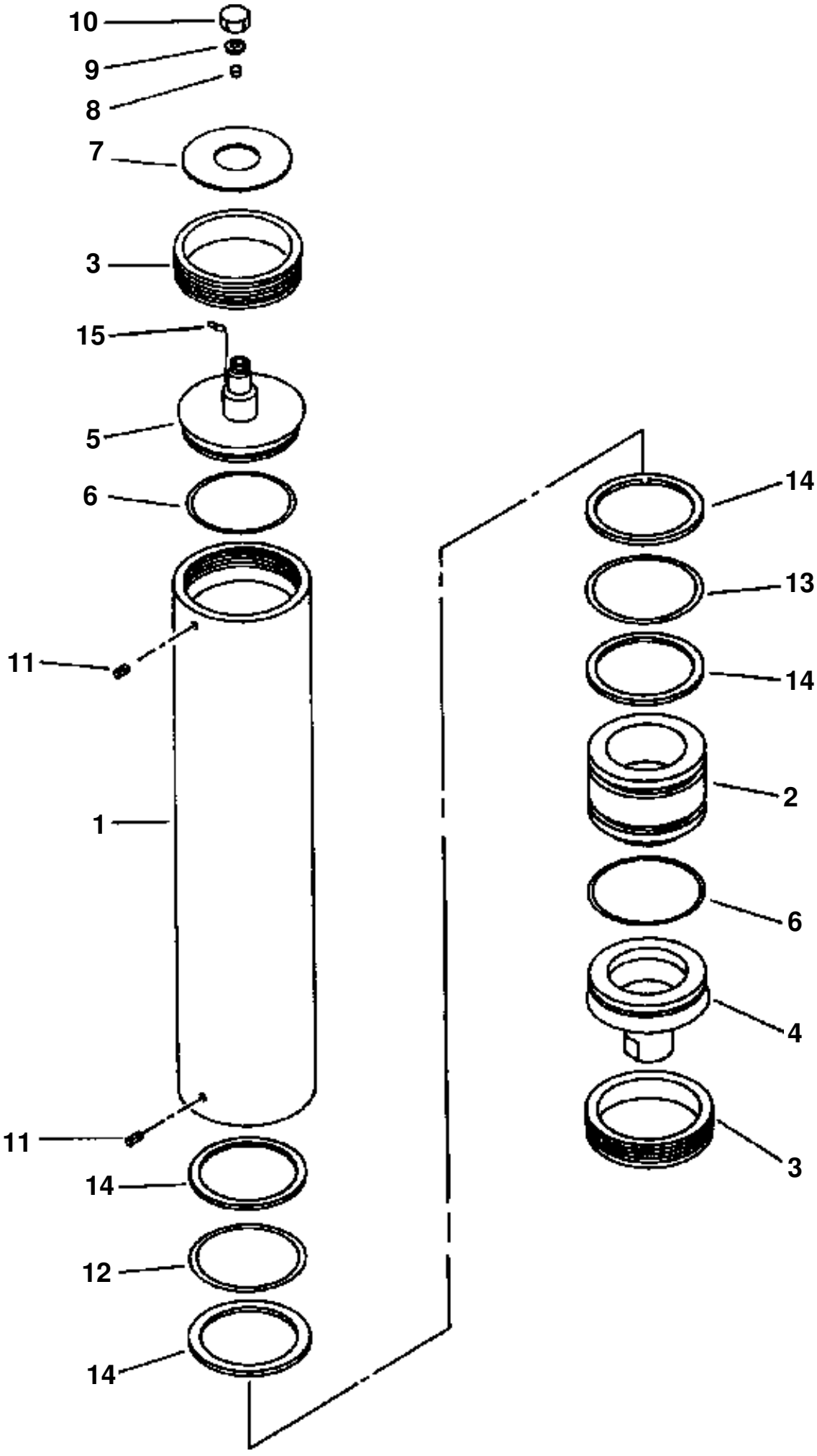

ACCUMULATOR

ITEM NO.	PART NO.	DESCRIPTION	Q'TY
	419-43-12801	ACCUMULATOR	1
1	419-43-12810	· CYLINDER	1
2	419-43-12820	· PISTON	1
3	419-43-12830	· NUT	2
4	419-43-12840	· COVER, BOTTOM	1
5	419-43-12851	· COVER, TOP	1
6	419-43-12870	· PLATE	1
	419-43-12700	SPARE PARTS KIT	1
7	419-43-12860	· O-RING	2
8	419-43-12880	· CORE	1
9	419-43-12890	· WASHER, SEAL	1
10	419-43-12910	· CAP	1
11	419-43-12920	· PIN, SPRING	2
12	419-43-12930	· O-RING	2
13	419-43-12940	· SEAL, SLIDER	2
14	419-43-12950	· RING, BACKUP	4
15	419-43-12260	· SENSOR, POSITION	1

STEERING CONTROL SYSTEM

DESCRIPTION
STEERING VALVE
PRIORITY VALVE
CUSHION VALVE
STEERING CYLINDER
STEERING OIL PIPING PUMP TO VALVE
STEERING OIL PIPING STEERING VALVE TO CUSHION VALVE
STEERING OIL PIPING CUSHION VALVE TO STEERING CYLINDERS
STEERING & TRANSMISSION CONTROL
TRANSMISSION CONTROL SWITCH
STEERING COLUMN
GROUND DRIVEN STEERING PUMP
DIVIDER VALVE FOR GROUND DRIVEN STEERING
CHECK VALVE FOR GROUND DRIVEN STEERING
GROUND STEERING PIPING (VALVE TO VALVE)
GROUND STEERING PIPING (VALVE TO TANK)
GROUND STEERING (PUMP MOUNTING)
GROUND POWER STEERING (ELECTRICAL INDICATOR WIRING)

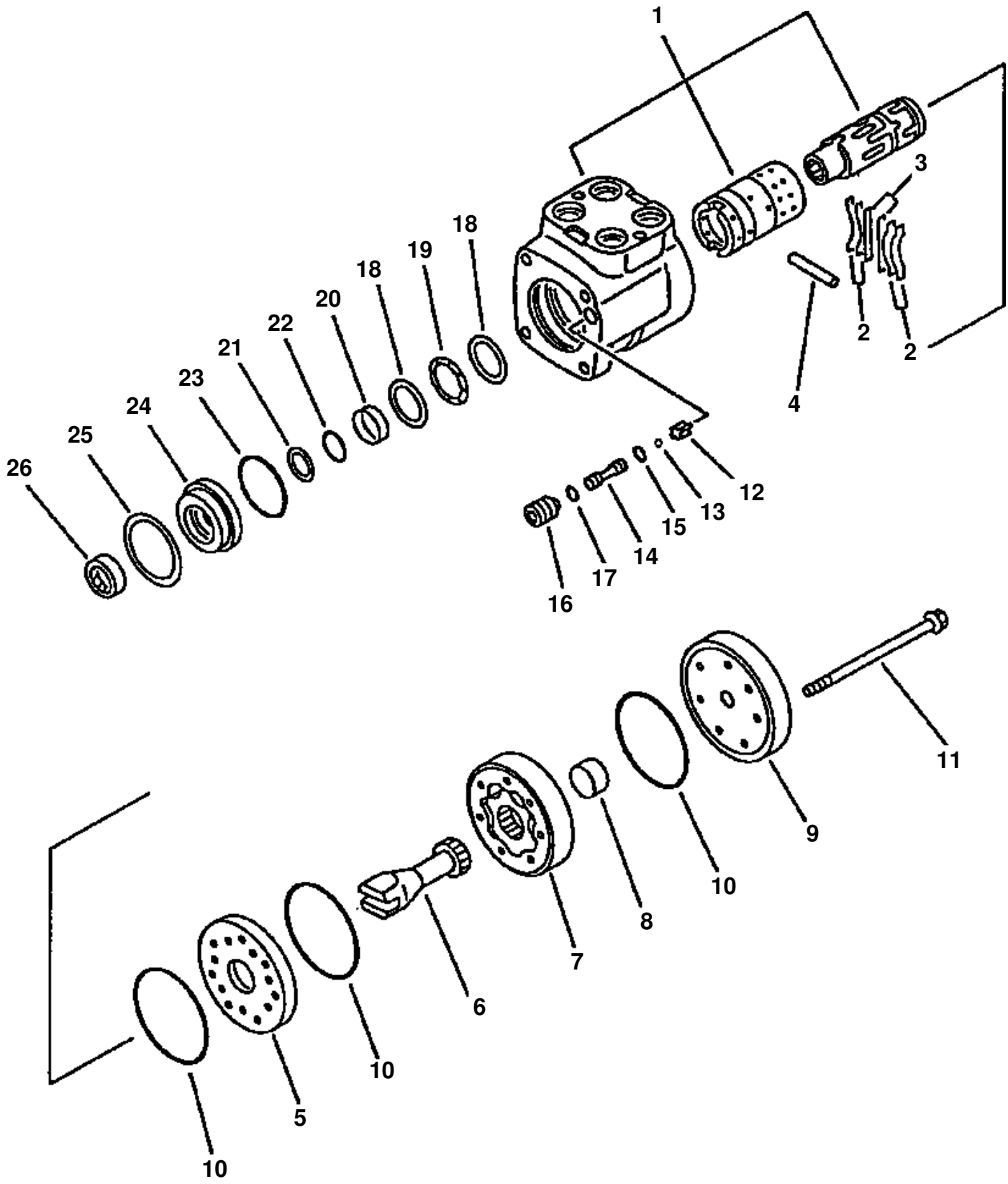
1
3
2
2
4
18
19
18
20
22
21
23
24
25
26
12
13
15
14
17
16
11
9
10
8
7
6
10
5
10

STEERING VALVE

ITEM NO.	PART NO.	DESCRIPTION	Q'TY	REF
	419-64-15200	VALVE ASSEMBLY, STEERING	1	
	419-64-15300	· ORBITROL	1	
1	419-64-15340	· · CONTROL ASSEMBLY	1	
2	416-64-15190	· · SPRING, CENTER RING	4	
3	417-64-15110	· · SPRING, FLAT	2	
4	416-64-15410	· · PIN	1	
5	416-64-15160	· · PLATE, SPACER	1	
6	416-64-15170	· · DRIVE	1	
7	419-64-15320	· · GEROTOR	1	
8	419-64-15330	· · SPACER	1	
9	416-64-15130	· · CAP, END	1	
10	416-64-15520	· · O-RING	3	F1
11	419-64-15310	· · SCREW	7	
12	416-64-15470	· · RETAINER	1	
13	416-64-15460	· · BALL	1	
14	416-64-15440	· · SEAT, CHECK	1	
15	416-64-15450	· · O-RING	1	F1
16	416-64-15420	· · SCREW, SET	1	
17	416-64-15430	· · O-RING	1	F1
18	416-64-15490	· · RACE, BEARING	2	
19	416-64-15510	· · BEARING	1	
20	416-64-15580	· · SEAL	1	F1
21	416-64-15590	· · RING, BACK-UP	1	F1
22	416-64-15570	· · O-RING	1	F1
23	416-64-15560	· · O-RING	1	F1
24	416-64-15540	· · BUSHING	1	
25	416-64-15530	· · RING	1	
26	416-64-15550	· · SEAL, DUST	1	F1
N/I	418-64-15300	· VALVE, OVERLOAD	1	
		F1 - INCLUDED IN THE FOLLOWING REPAIR KIT:		
	416-64-15500	REPAIR KIT, STEERING VALVE	1	

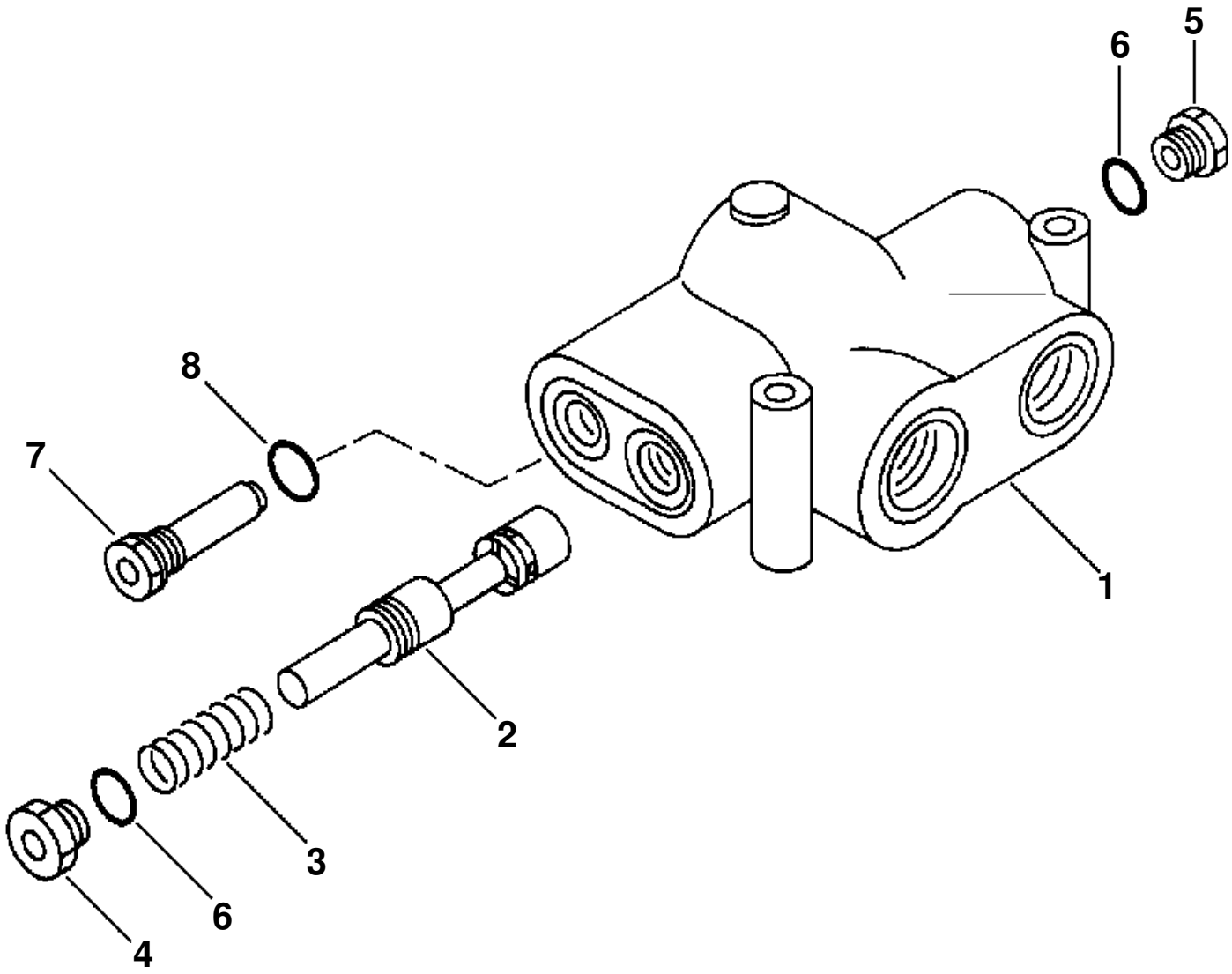
5
6
8
7
1
2
3
6
4

PRIORITY VALVE

ITEM NO.	PART NO.	DESCRIPTION	Q'TY
	419-64-15400	VALVE ASSEMBLY, PRIORITY	1
1	419-64-15410	・ HOUSING	1
2	419-64-15420	・ SPOOL ASSEMBLY	1
3	419-64-15430	・ SPRING	1
4	419-64-15460	・ PLUG	1
5	419-64-15480	・ PLUG	1
6	419-64-15470	・ O-RING	2
7	419-64-15440	・ VALVE, RELIEF	1
8	419-64-15450	・・ O-RING	1

FIG 10BHW320.003 **CUSHION VALVE**

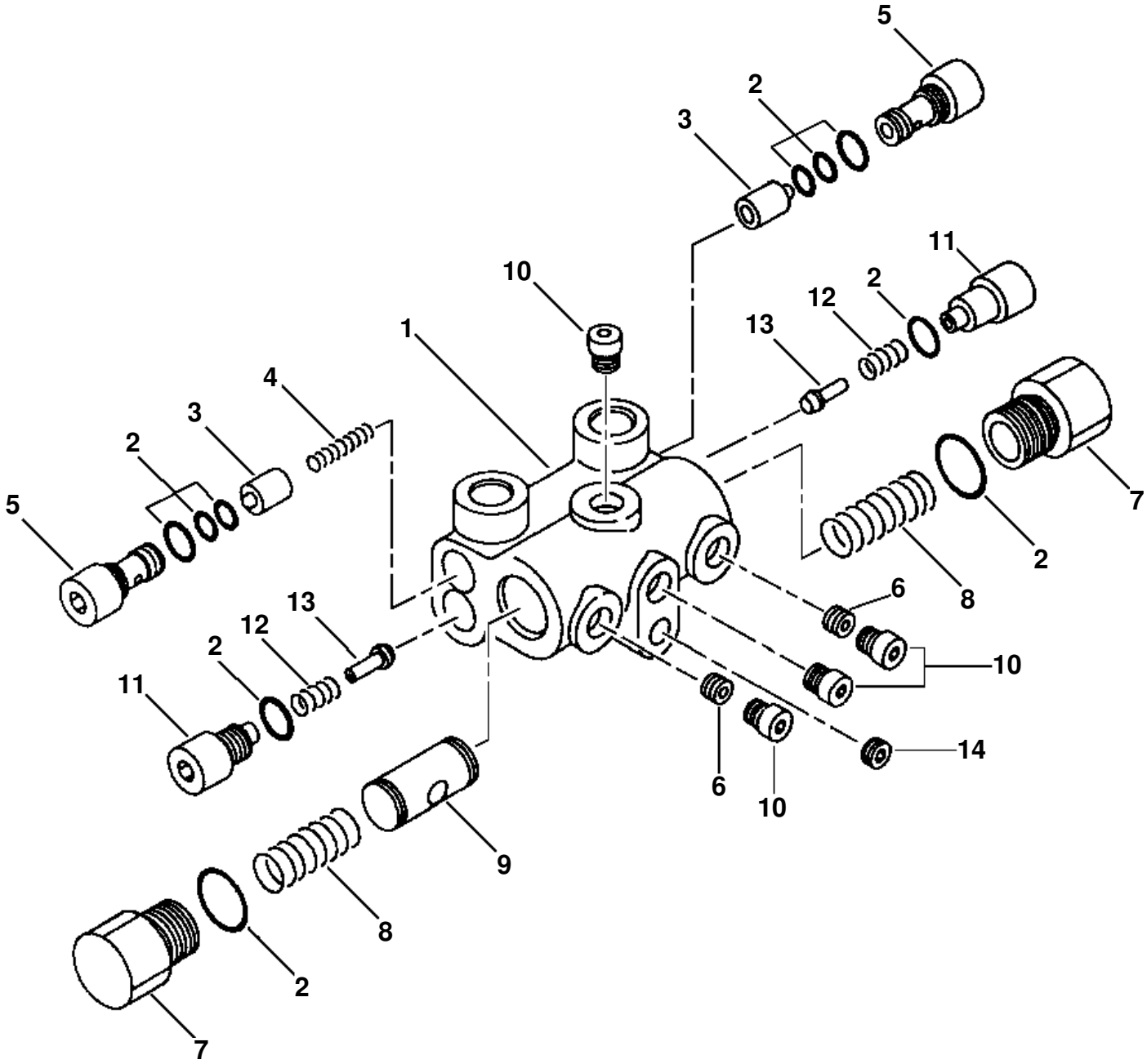

CUSHION VALVE

ITEM NO.	PART NO.	DESCRIPTION	Q'TY
	419-64-15500	VALVE ASSEMBLY, CUSHION	1
1	418-64-15820	· HOUSING	1
2	418-64-15810	· KIT, SEAL	1
3	418-64-15830	· POPPET	2
4	418-64-15840	· SPRING	2
5	418-64-15850	· SEAT, VALVE	2
6	419-64-15170	· ORIFICE	2
7	418-64-15870	· PLUG	2
8	418-64-15880	· SPRING	2
9	418-64-15890	· SPOOL	1
10	418-64-15910	· PLUG	4
11	418-64-15920	· PLUG	2
12	418-64-15930	· SPRING	2
13	418-64-15940	· POPPET	2
14	418-64-15950	· PLUG	1

FIG 10BRW320.001 **STEERING CYLINDER**

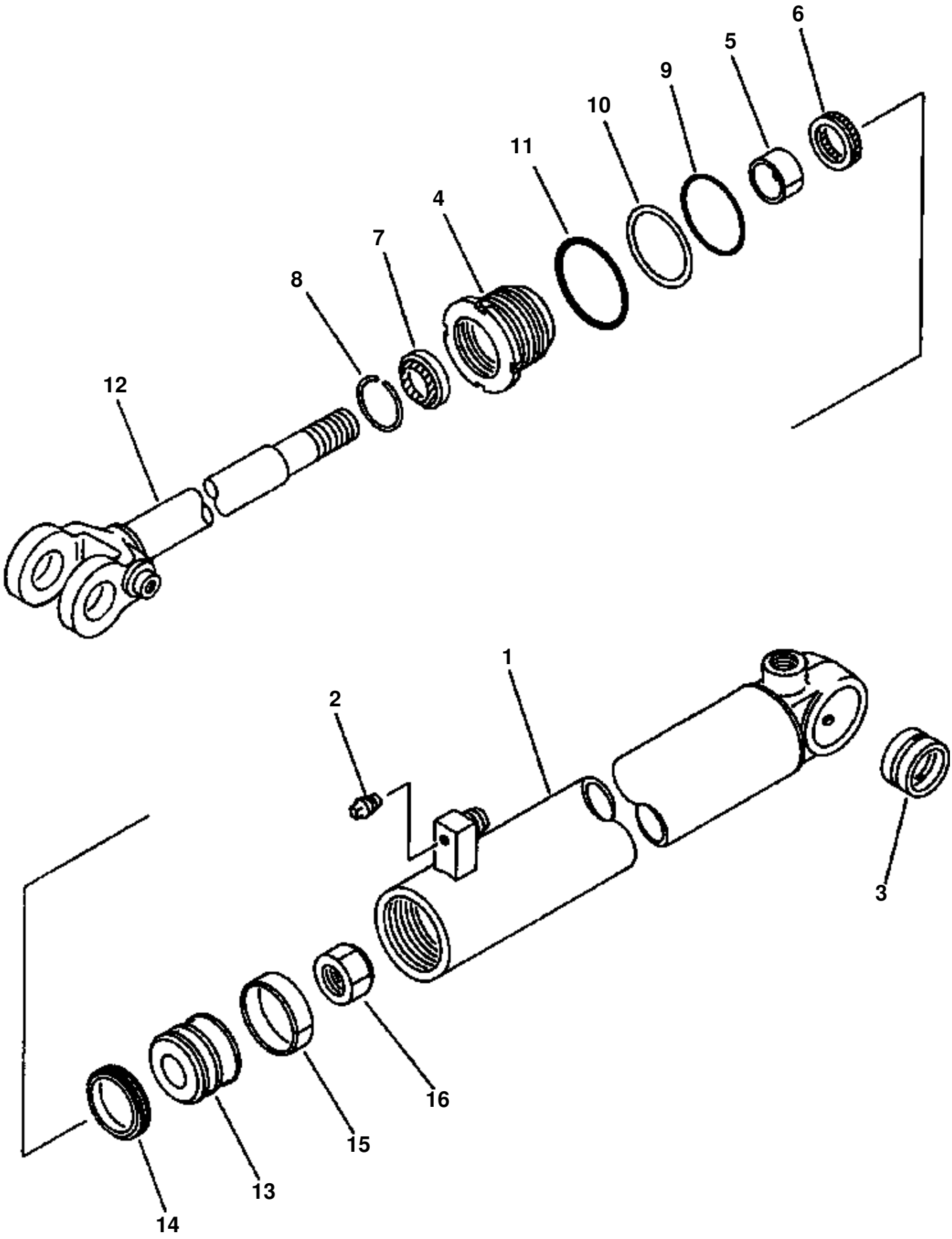

STEERING CYLINDER

ITEM NO.	PART NO.	DESCRIPTION	Q'TY
	707-00-01380	CYLINDER ASSEMBLY, STEERING	2
1	707-11-70180	· CYLINDER	1
2	07042-20108	· PLUG	1
3	707-76-40020	· BUSHING	1
4	707-29-70730	· HEAD, CYLINDER	1
5	07177-04025	· BUSHING	1
6	707-51-40030	· PACKING, ROD	1
7	07016-20407	· SEAL, DUST	1
8	07179-12052	· RING, SNAP	1
9	07000-12065	· O-RING	1
10	07146-02066	· RING, BACKUP	1
11	07000-02070	· O-RING	1
12	707-59-40090	· ROD, PISTON	1
13	707-36-70160	· PISTON	1
14	707-44-70180	· RING, PISTON	1
15	07156-00710	· RING, WEAR	1
16	07165-12426	· NUT	1

FIG 10ADW320.001 STEERING OIL PIPING PUMP TO VALVE

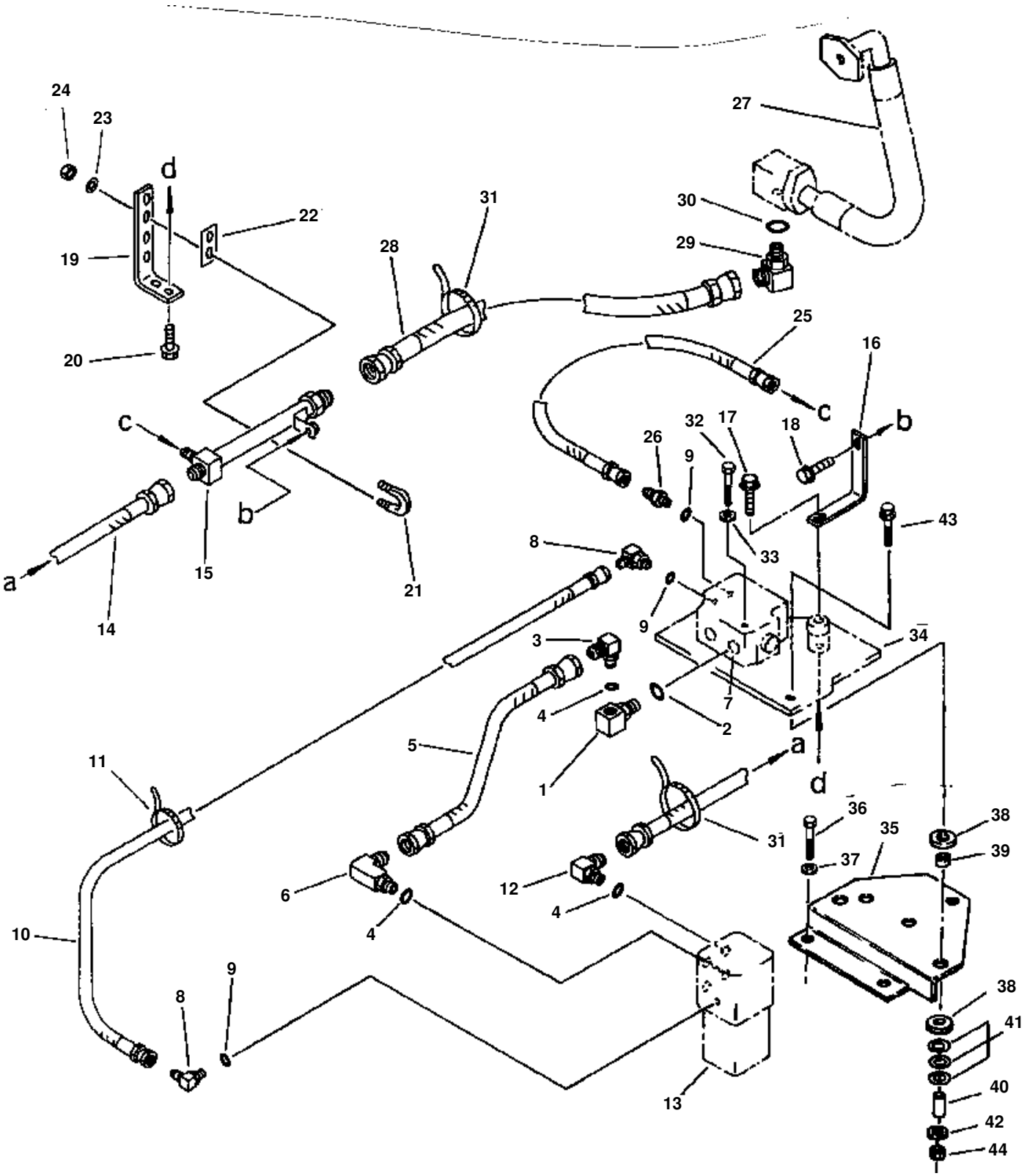

STEERING OIL PIPING PUMP TO VALVE

ITEM NO.	PART NO.	DESCRIPTION	Q'TY
1	419-62-11610	ELBOW	1
2	418-62-11620	O-RING	1
3	418-62-11440	ELBOW	2
4	415-62-11560	O-RING	5
5	419-62-11710	HOSE	1
6	418-62-11450	ELBOW	1
7		VALVE, PRIORITY (SEE PG 04-004)	
8	416-62-11490	ELBOW	2
9	416-62-11480	O-RING	3
10	07086-00209	HOSE	1
11	08034-00519	BAND	1
12	418-62-11440	ELBOW	1
13		VALVE, STEERING (SEE PG 04-002)	
14	419-62-11720	HOSE	1
15	419-62-11690	TUBE	1
N/I	419-62-11780	· JOINT	1
	01580-01008	· NUT	1
	07291-00628	· JOINT	1
	07240-20219	· JOINT	1
16	419-62-11760	PLATE	1
17	01435-01016	BOLT	1
18	01435-01020	BOLT	2
19	418-62-11611	SUPPORT	1
20	01435-01020	BOLT	2
21	07283-22746	CLIP	1
22	07283-52737	SEAT	1
23	01643-31032	WASHER	2
24	01599-01011	NUT	2
25	07102-20204	HOSE	1
26	416-62-11240	UNION	1
27		HOSE (SEE PG 06-038)	
28	07102-20607	HOSE	1
29	07235-10628	ELBOW	1
30	07002-12434	O-RING	1
31	08034-00519	BAND	2
32	01010-50885	BOLT	2
33	01643-30823	WASHER	2
34	419-64-15210	BRACKET	1
35	419-64-15220	BRACKET	1
36	01010-51635	BOLT	2
37	01643-31645	WASHER	2
38	418-54-12620	CUSHION	6
39	418-54-12610	CUSHION	3
40	418-54-13180	COLLER	3
41	418-54-13190	SHIM	9
42	418-54-13220	WASHER	3
43	01435-01250	BOLT	3
44	01584-01210	NUT	3

FIG 10ADW320.002 STEERING OIL PIPING STEERING VALVE TO CUSHION VALVE

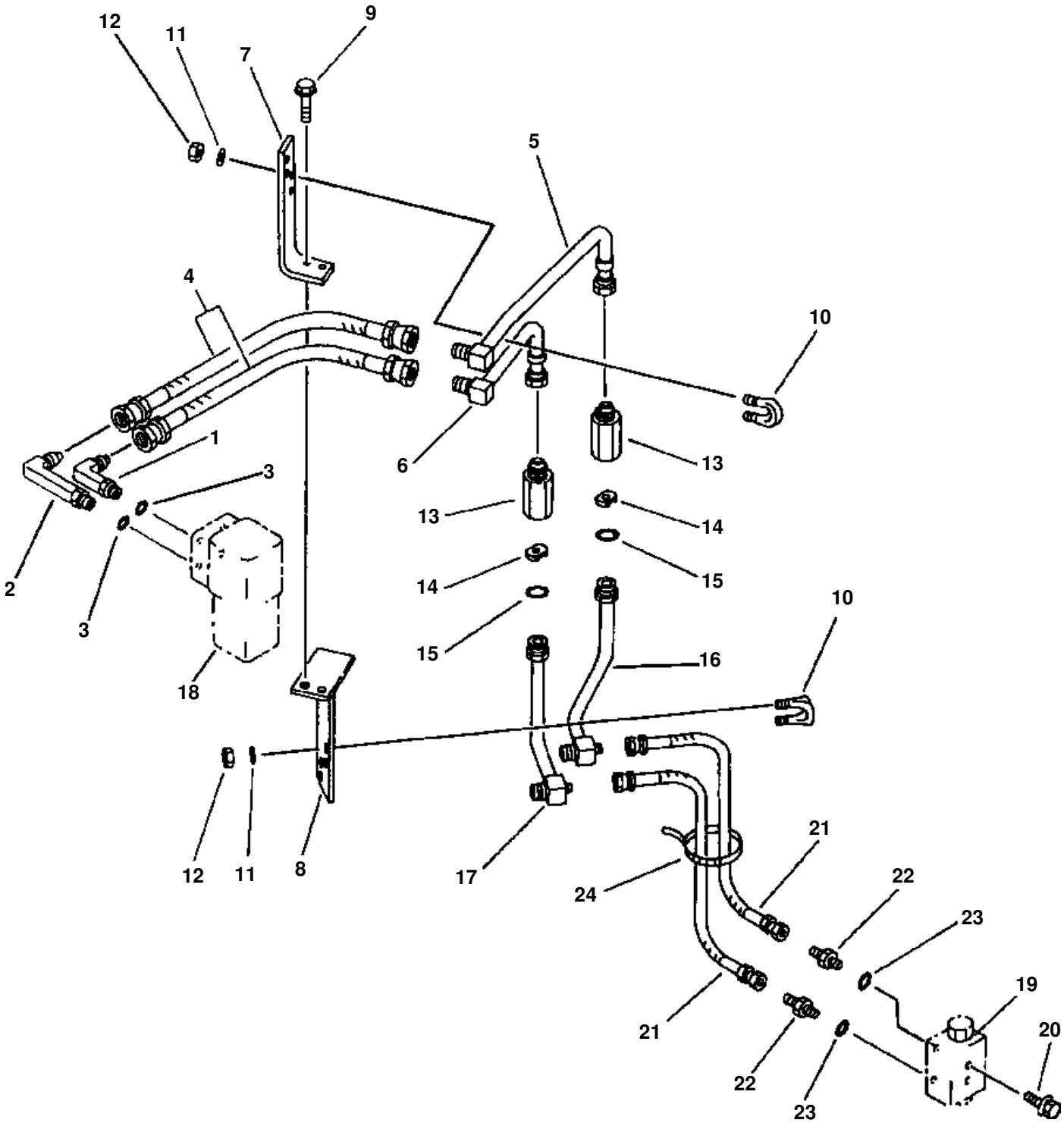

STEERING OIL PIPING STEERING VALVE TO CUSHION VALVE

ITEM NO.	PART NO.	DESCRIPTION	Q'TY
1	418-62-11450	ELBOW	1
2	419-62-11620	ELBOW	1
3	415-62-11560	O-RING	3
4	07086-00505	HOSE	2
5	419-62-11630	TUBE	1
N/I	418-62-11120	· SLEEVE NUT	1
	07241-40522	· ELBOW	1
6	419-62-11640	TUBE	1
N/I	418-62-11120	· SLEEVE NUT	1
	07241-40522	· ELBOW	1
7	419-62-11671	PLATE	1
8	419-62-11681	PLATE	1
9	01435-01235	BOLT	2
10	07283-22236	CLIP	4
11	01643-31032	WASHER	8
12	01599-01011	NUT	8
13	416-62-11110	BODY	2
14	419-62-11790	POPPET	2
15	07002-13034	O-RING	2
16	419-62-11650	TUBE	1
N/I	418-62-11230	· NIPPLE	1
	418-99-14770	· TEE	1
17	419-62-11660	TUBE	1
N/I	418-62-11230	· NIPPLE	1
	418-99-14770	· TEE	1
18		VALVE, STEERING (SEE PG 04-002)	
19		VALVE, CUSHION (SEE PG 04-006)	
20	01435-00820	BOLT	2
21	419-62-11550	HOSE	2
22	418-62-11660	UNION	2
23	07000-12014	O-RING	2
24	08034-00519	BAND	1

FIG 10ADW320.003 STEERING OIL PIPING CUSHION VALVE TO STEERING CYLINDERS

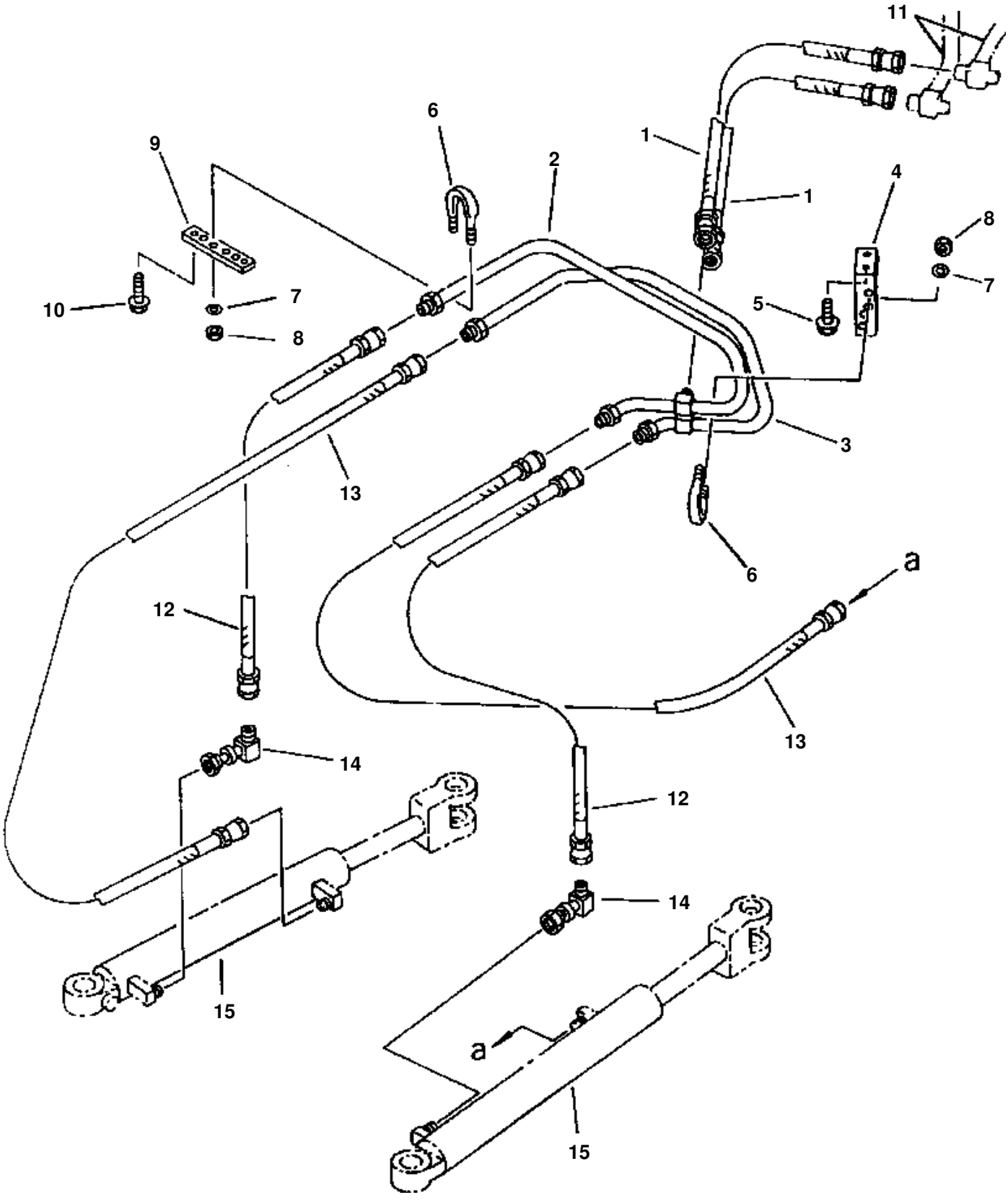

STEERING OIL PIPING CUSHION VALVE TO STEERING CYLINDERS

ITEM NO.	PART NO.	DESCRIPTION	Q'TY
1	07086-00507	HOSE	2
2	419-62-11141	TUBE	1
3	419-62-11131	TUBE	1
4	419-62-11150	PLATE	1
5	01435-01020	BOLT	4
6	07283-22236	CLIP	4
7	01643-31032	WASHER	8
8	01599-01011	NUT	8
9	419-62-11160	PLATE	1
10	01435-01020	BOLT	2
11		TUBE (SEE PG 04-014) TUBE (SEE PG 04-014)	
12	07086-00405	HOSE	2
13	07086-00408	HOSE	2
14	419-62-11450	ELBOW	2
15		CYLINDER, STEERING (SEE PG 04-008)	

FIG 05ADW320.001 STEERING & TRANSMISSION CONTROL

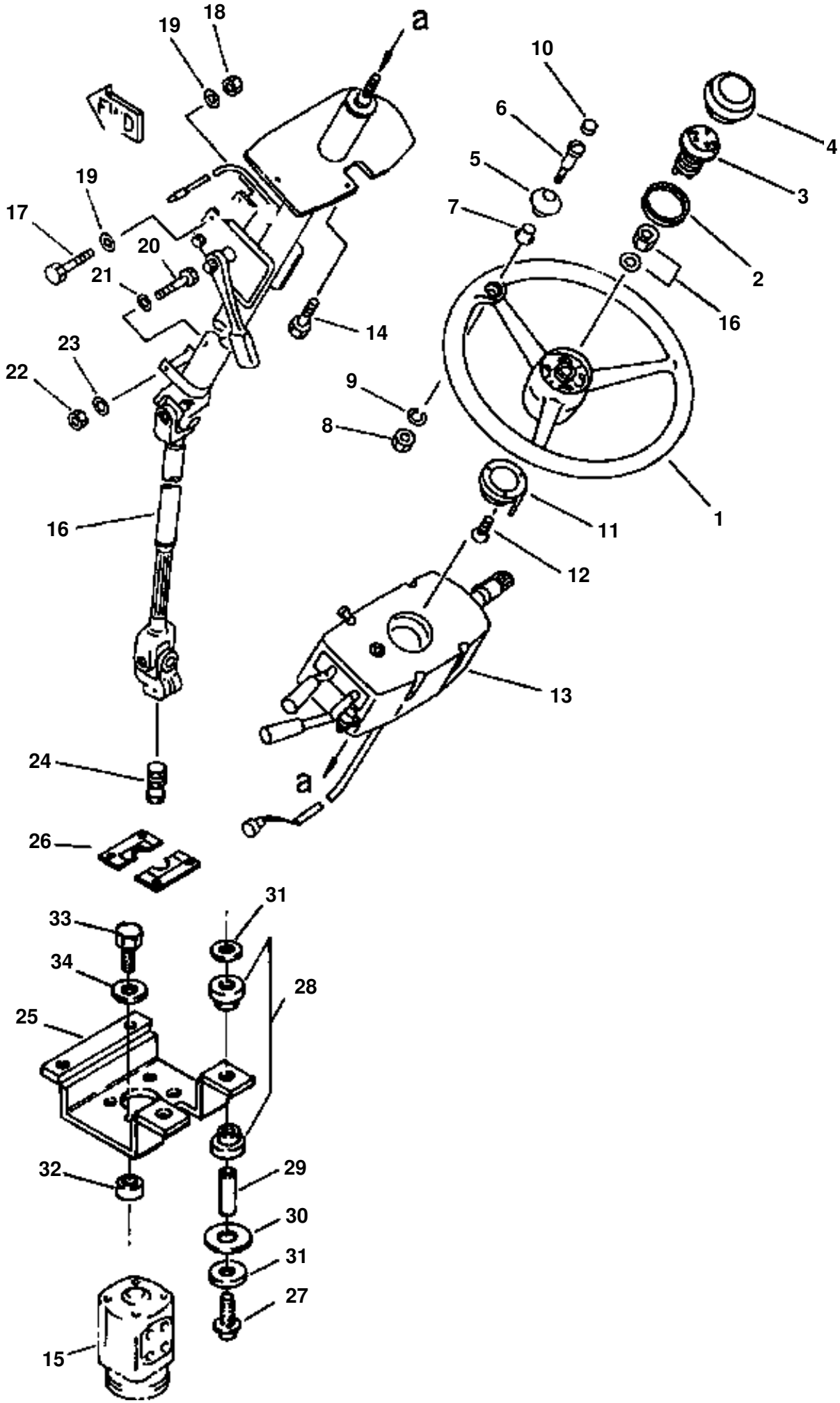

STEERING & TRANSMISSION CONTROL

ITEM NO.	PART NO.	DESCRIPTION	Q'TY
	421-40-12111	WHEEL ASSEMBLY, STEERING	1
1	421-40-12121	· WHEEL	1
2	362-43-15140	· SPRING, LOCK	1
3	421-40-12160	· CONTACT NEEDLE	1
4	362-43-15120	· BUTTON, HORN	1
5	362-43-15160	· GRIP	1
6	362-43-15180	· SHAFT	1
7	362-43-15190	· BUSHING	1
8	362-43-15210	· NUT	1
9	362-43-15220	· WASHER	1
10	362-43-15170	· CAP	1
11	421-40-12151	PIN, CANCEL	1
12	01235-40616	SCREW	3
13		SWITCH ASSEMBLY, TRANSMISSION CONTROL (SEE PG 04-022)	1
14	01435-00616	BOLT, FLANGED	3
	01010-50616	BOLT	3
		AND	
	01643-30623	WASHER	3
15		VALVE, STEERING (SEE PG 04-002)	
16		COLUMN ASSEMBLY, STEERING (SEE PG 04-024)	
17	01011-51010	BOLT	2
18	01580-11008	NUT	2
19	01643-31032	WASHER	4
20	421-40-12912	BOLT	1
21	01643-31232	WASHER	1
22	01580-10806	NUT	1
23	01643-30823	WASHER	1
24	418-40-12122	SHAFT	1
25	419-54-13560	SUPPORT	1
26	418-54-12521	PLATE	2
27	01435-01250	BOLT	4
28	419-43-17930	CUSHION	8
29	419-54-13570	SPACER	4
30	419-54-13580	SHIM - 0.5mm	12
31	419-43-17920	WASHER	8
32	418-40-12130	PACKING	1
33	02010-70632	BOLT	4
34	01643-31032	WASHER	4

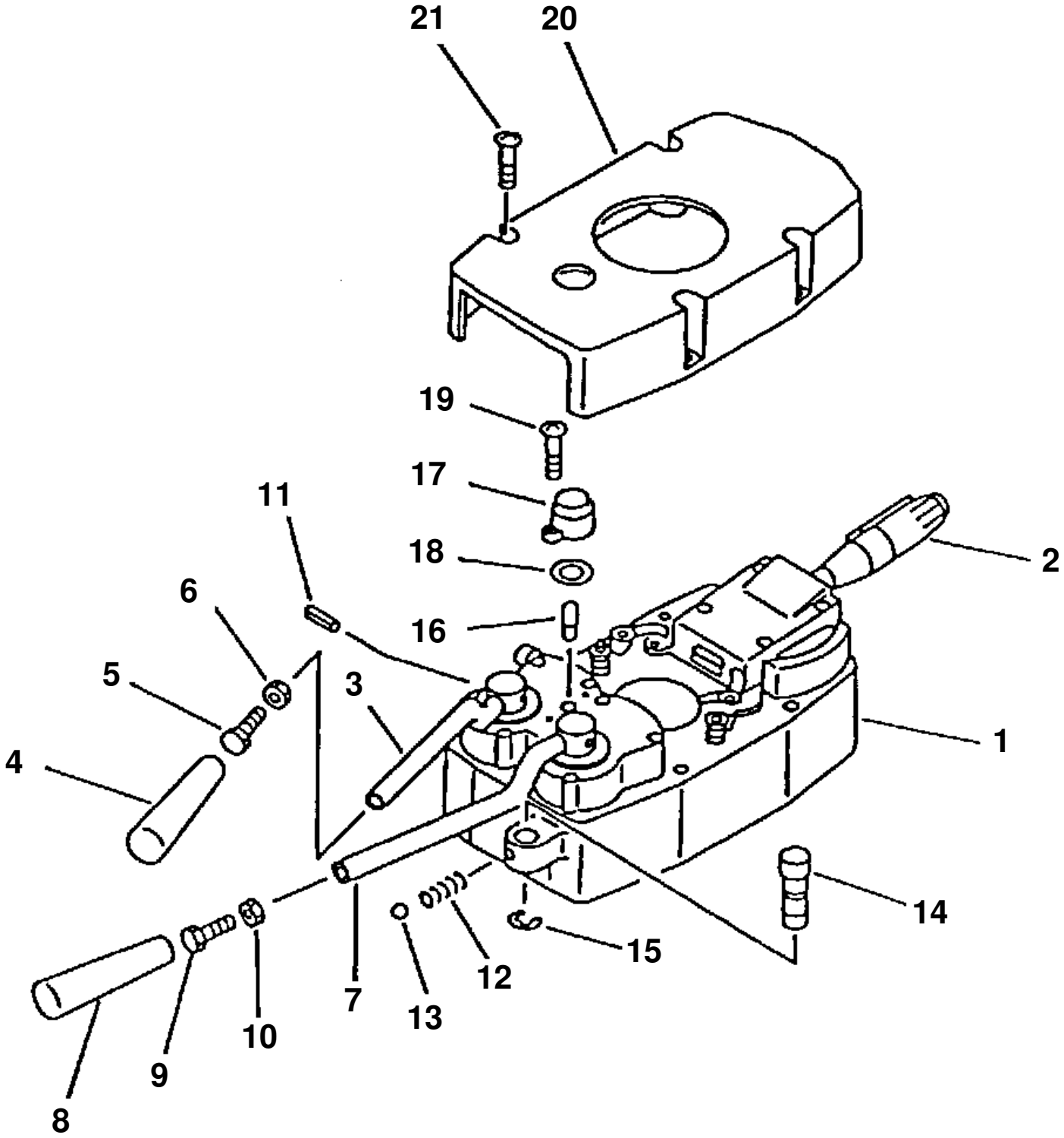
21
20
19
17
18
16
11
6
5
3
4
2
1
14
15
12
13
7
10
9
8

TRANSMISSION CONTROL SWITCH

ITEM NO.	PART NO.	DESCRIPTION	Q'TY	REF
1	421-06-11605	SWITCH ASSEMBLY, TRANSMISSION	1	F1
2	421-06-18220	· KNOB ASSEMBLY, LAMP AND TURN SIGNAL	1	
3	421-06-18191	· LEVER ASSEMBLY, TRANSMISSION (F-R)	1	
4	421-06-18160	· · KNOB	1	
5	421-06-18230	· · BOLT	1	
6	421-06-18240	· · NUT	1	
7	421-06-18211	· LEVER ASSEMBLY, TRANSMISSION SPEED	1	
8	421-06-18160	· · KNOB	1	
9	421-06-18230	· · BOLT	1	
10	421-06-18240	· · NUT	1	
11	04025-00520	· PIN, SPRING	2	
12	421-06-18120	· SPRING	1	
13	04260-00317	· BALL	1	
14	421-06-18110	· PIN, LOCK	1	
15	421-06-18130	· RING, SNAP	1	
16	7815-11-1010	· BULB, 3W	1	
17	421-06-18170	· LENS, HAZARD PILOT	1	
18	421-06-18180	· PACKING	1	
19	01220-40310	· SCREW	2	
20	421-06-18140	· COVER	1	
21	421-06-18150	· SCREW	4	
	01435-00616	BOLT, FLANGED	3	
	01010-50616	BOLT	3	
		AND		
	01643-30623	WASHER	3	
		F1 - FOR MOUNTING HARDWARE SEE PG 04- 019		

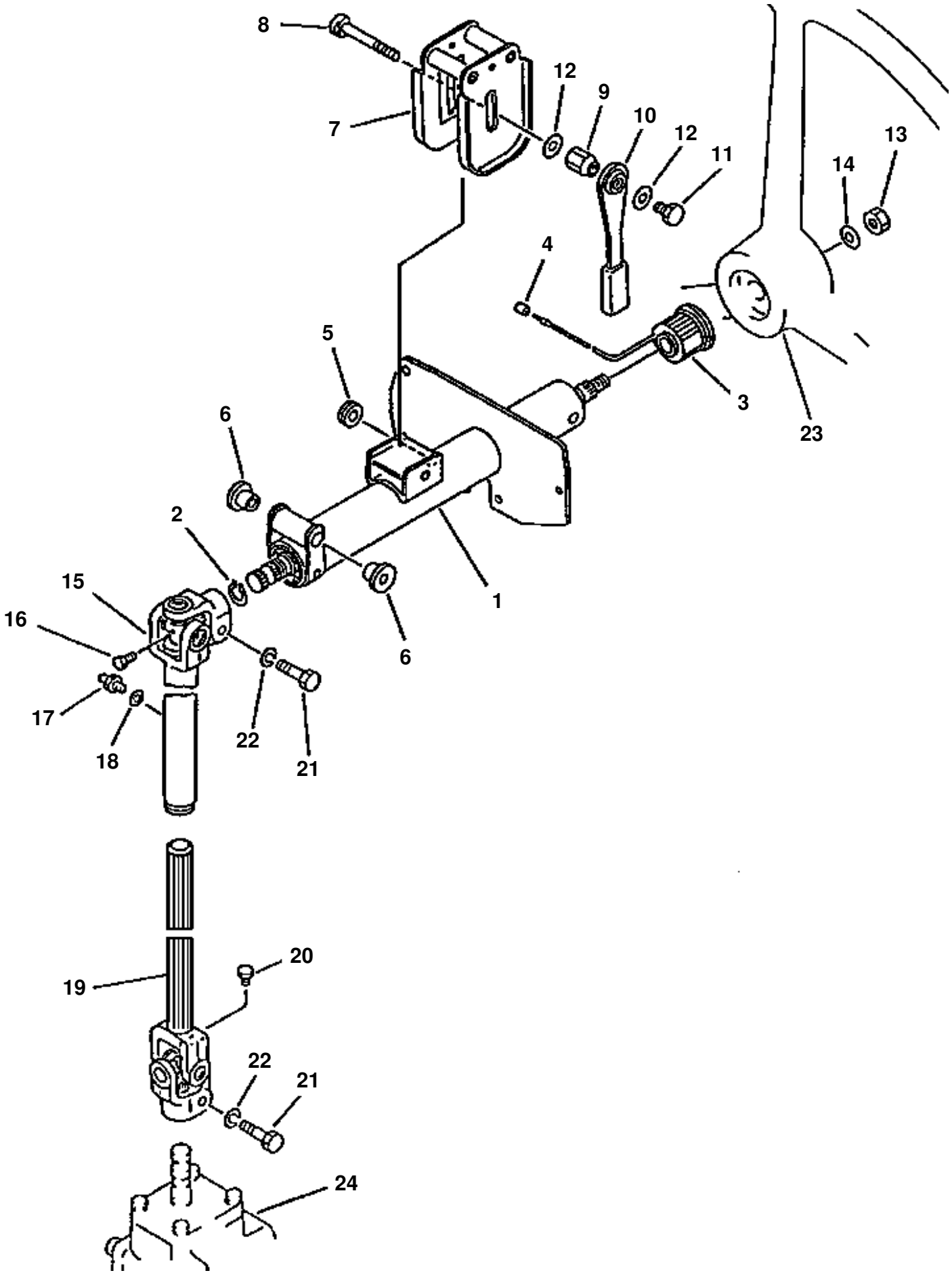
8
7
12
9
10
12
11
13
14
4
5
3
23
6
2
1
6
15
16
17
18
22
21
19
20
22
21
24

STEERING COLUMN

ITEM NO.	PART NO.	DESCRIPTION	Q'TY
	421-40-12314	COLUMN ASSEMBLY, STEERING	1
1	421-40-12470	· COLUMN ASSEMBLY	1
	421-40-12331	· · SHAFT	1
	421-40-12321	· · COLUMN	1
	06004-06004	· · BEARING, SHAFT	1
2	04064-02012	· · RING, SNAP	1
3	421-40-12430	· · BUSHING	1
4	421-40-12460	· · COVER	1
5	419-40-12110	· · GROMMET	1
6	421-40-12411	· · BUSHING	2
7	421-40-12350	· · BRACKET	1
8	421-40-12370	· · BOLT	1
9	421-40-12380	· · NUT	1
10	421-40-12361	· · LEVER	1
11	421-40-12390	· · BOLT	1
12	421-40-12420	· · WASHER	2
13	421-40-12440	· · NUT	1
14	421-40-12450	· · WASHER	1
15	421-40-12571	· JOINT ASSEMBLY	1
	421-40-12511	· · SPIDER	1
16	421-40-12590	· · · PLUG	1
	421-40-12521	· · YOKE, INTERNAL SPLINED - LONG	1
	421-40-12531	· · YOKE, INTERNAL SPLINED - SHORT	1
	421-40-12550	· · SEAL	1
	421-40-12560	· · COVER	1
17	07020-00001	· · FITTING, GREASE	1
18	01643-30623	· · WASHER	1
19	421-40-12581	· JOINT ASSEMBLY	1
	421-40-12542	· · YOKE, EXTERNAL SPLINED	1
	421-40-12511	· · SPIDER	1
20	421-40-12590	· · · PLUG	1
	421-40-12531	· · YOKE, INTERNAL SPLINED	1
21	01050-51040	· BOLT	2
22	01602-21030	· WASHER, SPRING	2
23		WHEEL ASSEMBLY, STEERING (SEE PG 04-018)	
24		VALVE ASSEMBLY, STEERING (SEE PG 04-002)	

FIG 10AVW380.005 GROUND DRIVEN STEERING PUMP

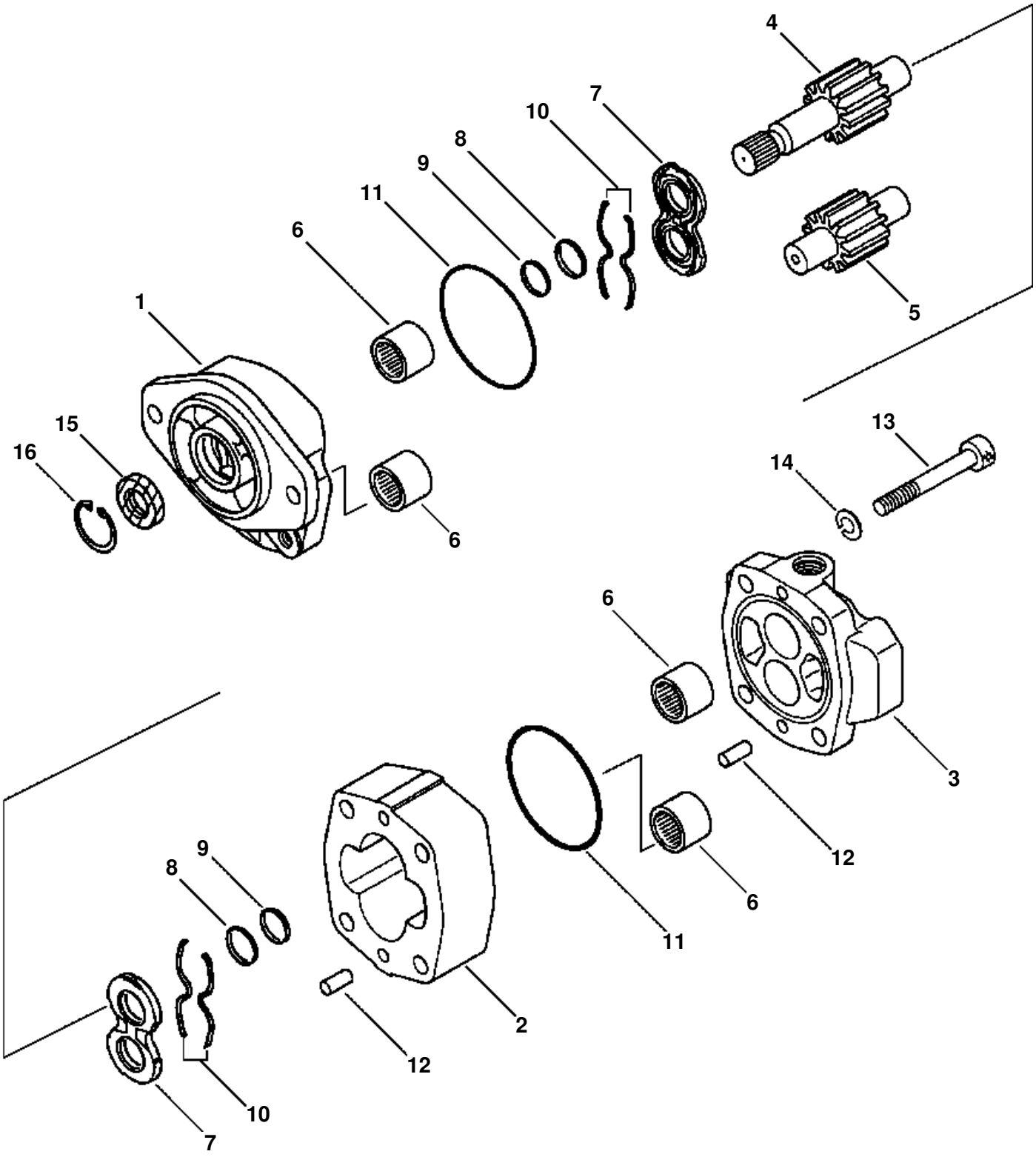

GROUND DRIVEN STEERING PUMP

ITEM NO.	PART NO.	DESCRIPTION	Q'TY	REF
	704-30-32110	PUMP ASSEMBLY, GROUND DRIVEN STEERING (SAM2-40)	1	
1	704-37-02030	· BRACKET	1	F1
2	704-37-29010	· CASE, GEAR	1	F1
3	704-37-02180	· COVER	1	F1
4	705-17-29411	· GEAR, DRIVE	1	F1
5	705-17-29512	· GEAR, DRIVEN	1	F1
6	704-37-02350	· BEARING, NEEDLE	4	F1
7	704-37-02610	· PLATE, SIDE	2	F1
8	704-37-02440	· RING, BACK-UP	4	F1
9	704-37-02470	· RING, SEAL	4	F1
10	704-37-02450	· RING, BACK-UP	4	F1
11	07000-12100	· O-RING	2	F1
12	04020-01024	· PIN, DOWEL	4	F1
13	01252-31485	· BOLT	4	F1
14	01602-01442	· WASHER, SPRING	4	F1
15	705-17-02810	· SEAL, OIL	1	
16	04065-04018	· RING, SNAP	1	
		F1 - PARTS ARE SUPPLIED ONLY TO DESIGNATED DEALERS WHICH ARE EQUIPPED WITH A HYDRAULIC PUMP TESTER.		

FIG 10BHW250.008 DIVIDER VALVE FOR GROUND DRIVEN STEERING

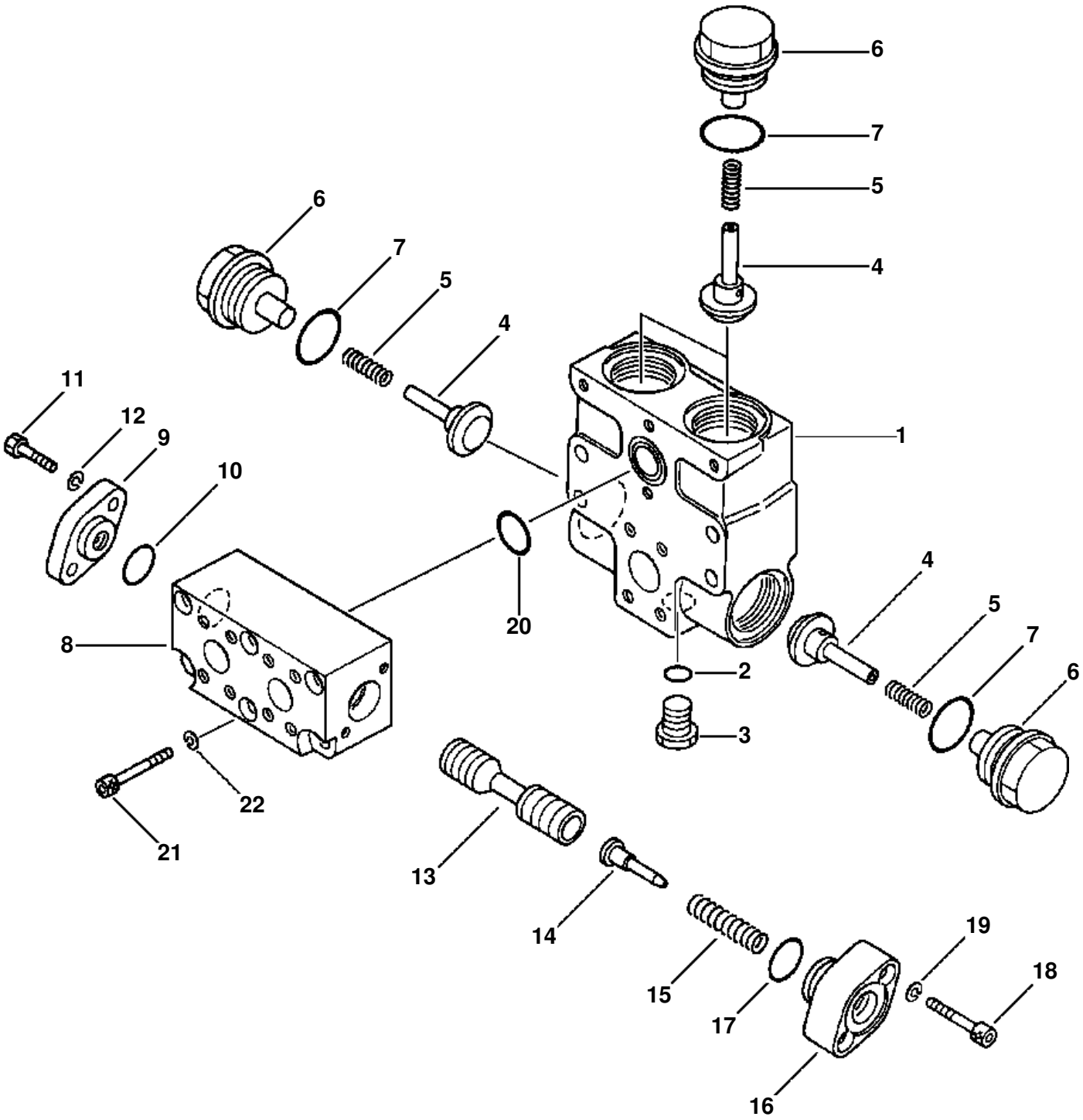

DIVIDER VALVE FOR GROUND DRIVEN STEERING

ITEM NO.	PART NO.	DESCRIPTION	Q'TY
	421-875-1101	VALVE ASSEMBLY, DIVIDER	1
1	(NSS)	· BODY	1
2	07040-12012	· PLUG	1
3	07002-02034	· O-RING	1
4	421-875-1130	· POPPET	4
5	421-875-1140	· SPRING	4
6	421-875-1150	· PLUG	4
7	07002-14234	· O-RING	4
8	(NSS)	· BODY	1
9	421-875-1340	· COVER	1
10	07000-13028	· O-RING	1
11	01010-50825	· BOLT	2
12	01602-20825	· WASHER, SPRING	2
13	(NSS)	· SPOOL	1
14	421-875-1360	· RETAINER	1
15	421-875-1330	· SPRING	1
16	421-875-1350	· COVER	1
17	07000-03025	· O-RING	1
18	01252-40830	· BOLT	2
19	01602-20825	· WASHER, SPRING	2
20	07000-13035	· O-RING	1
21	01252-40870	· BOLT	4
22	01602-20825	· WASHER, SPRING	4

FIG 10BHW250.009 CHECK VALVE FOR GROUND DRIVEN STEERING

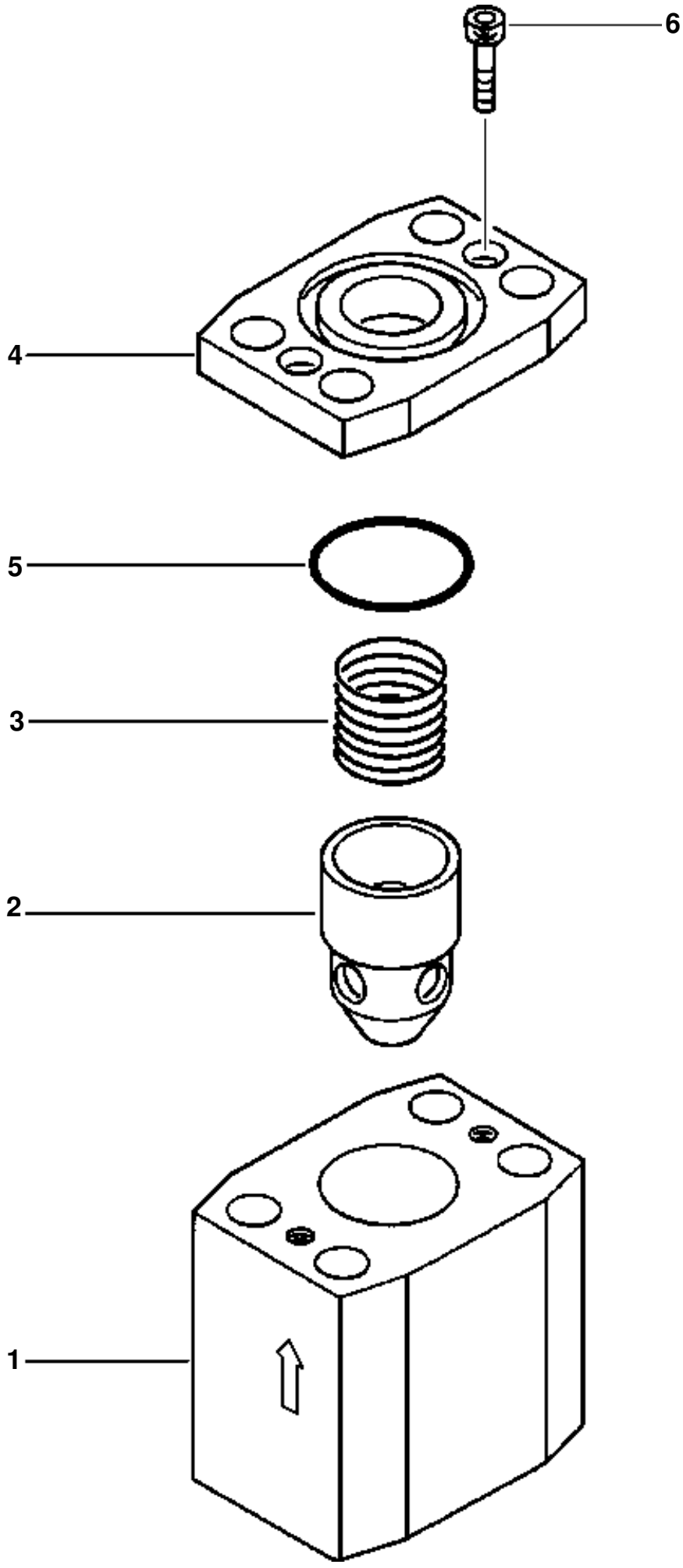

CHECK VALVE FOR GROUND DRIVEN STEERING

ITEM NO.	PART NO.	DESCRIPTION	Q'TY
	702-13-23902	VALVE ASSEMBLY, CHECK	2
1	702-13-22911	· BODY	1
2	702-13-22921	· POPPET	1
3	702-13-22940	· SPRING	1
4	702-13-22931	· PLATE	1
5	07000-23035	· O-RING	1
6	708-25-12380	· BOLT	2

FIG 10AMW320.001 GROUND STEERING PIPING (VALVE TO VALVE)

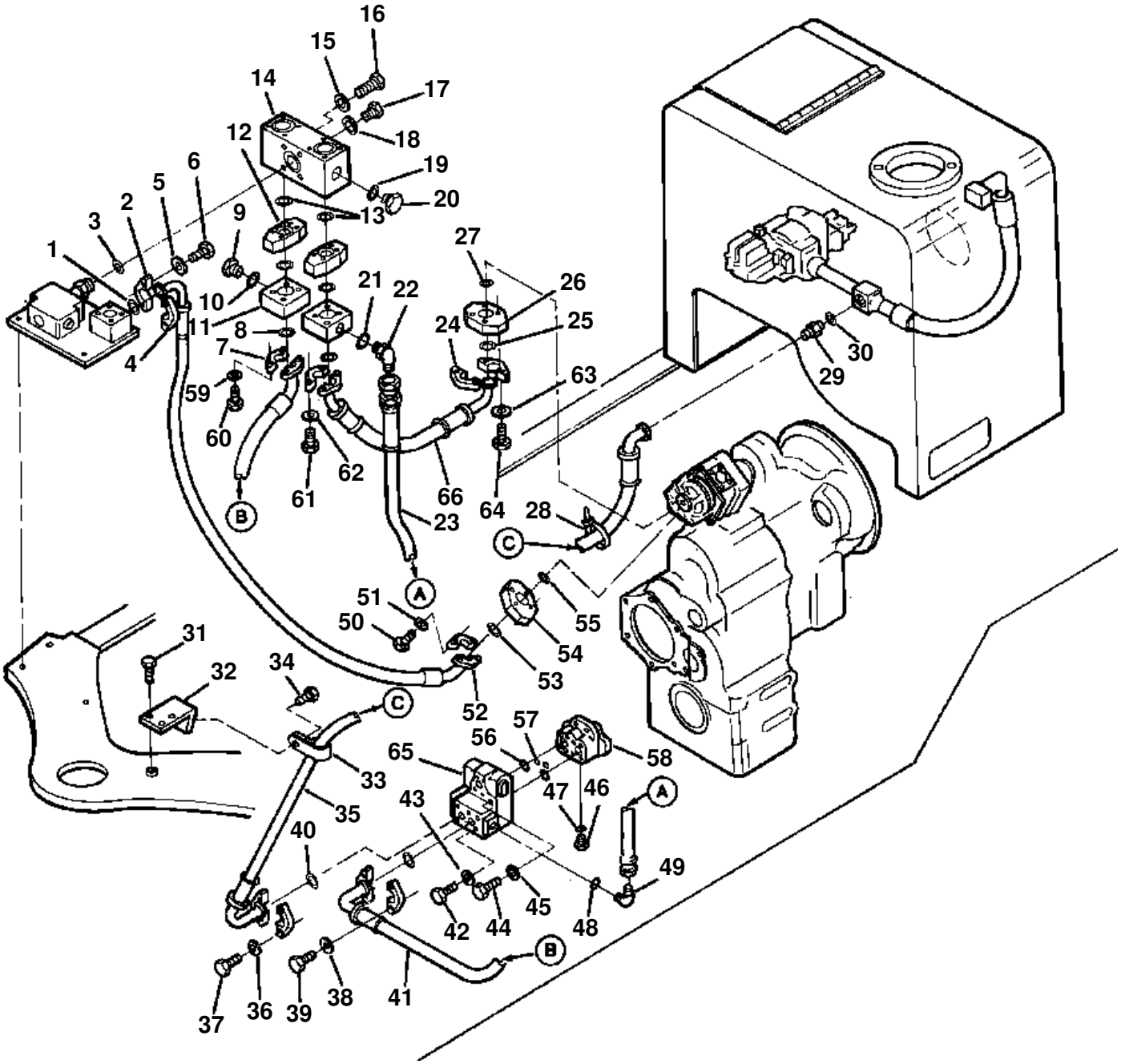

GROUND STEERING PIPING (VALVE TO VALVE)

ITEM NO.	PART NO.	DESCRIPTION	Q'TY
1	07000-13035	O-RING	1
2	419-875-1520	HOSE	1
3	07000-13035	O-RING	1
4	07371-30638	FLANGE, SPLIT	2
5	01643-50823	WASHER	4
6	01010-50830	BOLT	4
7	07371-31049	FLANGE	4
8	07000-13032	O-RING	4
9	07040-11409	PLUG	1
10	07002-11423	O-RING	4
11	419-875-1171	BLOCK	2
12	702-13-23902	CHECK VALVE	2
13	07000-13035	O-RING	4
14	418-875-1280	BLOCK	1
15	01643-31032	WASHER	4
16	01011-51000	BOLT	4
17	07040-11409	PLUG	1
18	07002-11423	O-RING	1
19	07002-12434	O-RING	1
20	07040-12414	PLUG	1
21	07002-11423	O-RING	1
22	07235-10210	ELBOW	1
23	419-875-1570	HOSE	1
24	07371-31049	FLANGE, SPLIT	2
25	07000-13032	O-RING	1
26	419-877-1320	FLANGE	1
27	07000-13032	O-RING	1
28	08034-00519	BAND	1
29	07230-10628	UNION	1
30	07002-12434	O-RING	1
31	01435-01020	BOLT	2
32	419-875-1680	BRACKET	1
33	08036-03014	CLAMP	1
34	01435-01016	BOLT	1
35	419-875-1690	HOSE	1
36	01643-51032	WASHER	4
37	07372-01035	BOLT	4
38	01643-51032	WASHER	4
39	07372-01035	BOLT	4
40	07000-13032	O-RING	2
41	419-875-1540	HOSE	1
42	01011-31045	BOLT	2
43	01643-31032	WASHER	2
44	01010-31085	BOLT	2
45	01643-31032	WASHER	2
46	07040-12012	PLUG	1
47	07002-02034	O-RING	1
48	07002-11423	O-RING	1
49	07235-10210	ELBOW	1
50	07372-21050	BOLT	4
51	01643-51032	WASHER	4
52	07371-31049	FLANGE, SPLIT	2
53	07000-31032	O-RING	1
54	07373-11000	SPACER	1
55	07000-13032	O-RING	1
56	07000-13040	O-RING	2
57	07000-02012	O-RING	2
58		PUMP ASSY (SEE PG 04-026)	
59	01643-51032	WASHER	4
60	419-09-11280	BOLT	4
61	419-09-11280	BOLT	4
62	01643-51032	WASHER	4
63	01643-51032	WASHER	4
64	419-877-1340	BOLT	4
65		DIVIDER VALVE ASSY (SEE PG 04-028)	
66	419-875-1510	HOSE	1
N/I	08034-00834	BAND	2
	08034-00519	BAND	2

FIG 10AMW320.002 GROUND STEERING PIPING (VALVE TO TANK)

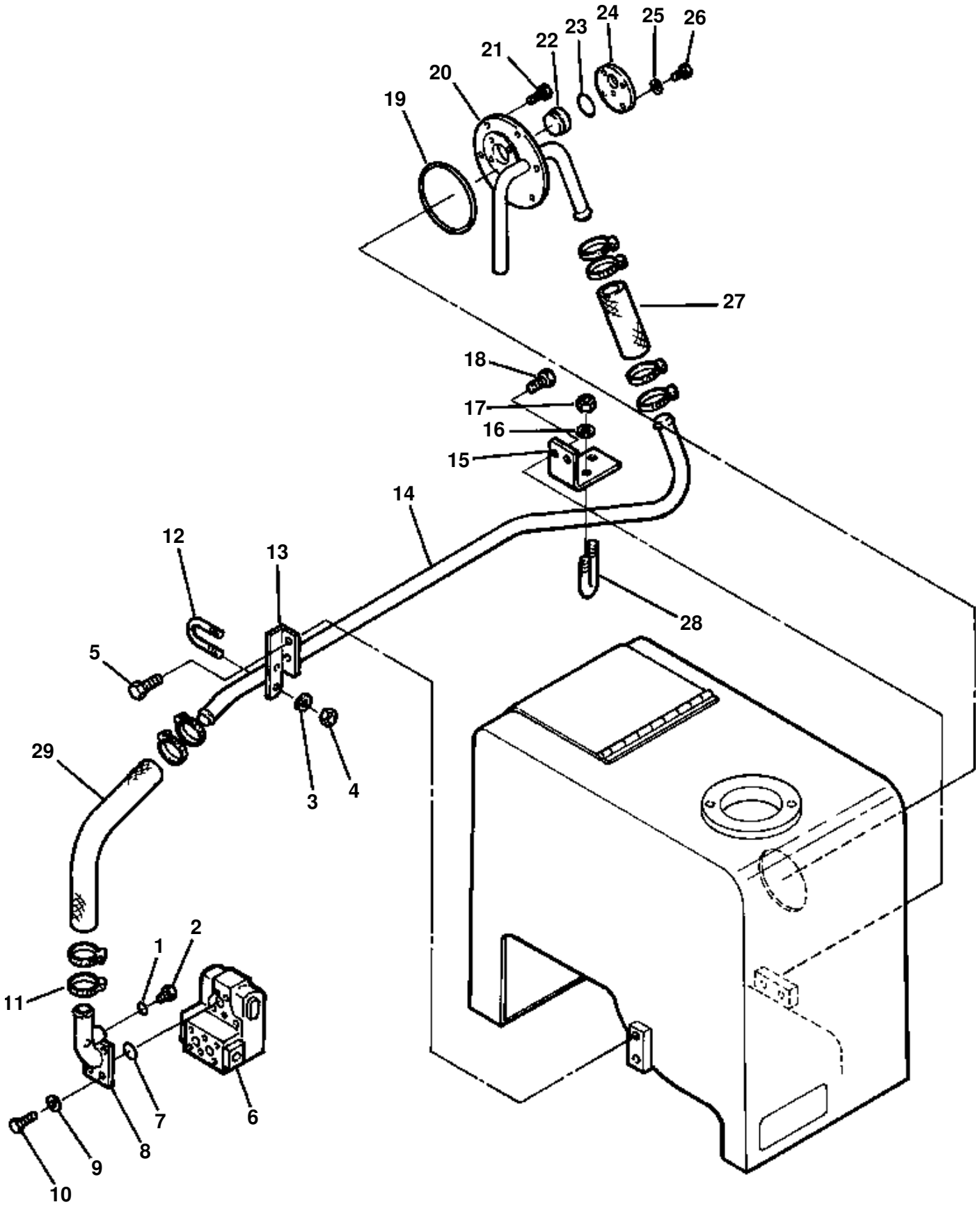

GROUND STEERING PIPING (VALVE TO TANK)

ITEM NO.	PART NO.	DESCRIPTION	Q'TY
1	200-62-17150	O-RING	1
2	424-875-1680	PLUG	1
3	01643-31032	WASHER	2
4	01599-01011	NUT	2
5	01435-01020	BOLT	2
6		DIVIDER VALVE ASSY (SEE PG 04-028)	
7	07000-03042	O-RING	1
8	419-875-1252	ELBOW, TUBE	1
9	01643-31032	WASHER	4
10	01010-51030	BOLT	4
11	07281-00489	CLAMP, HOSE	4
12	07283-23442	U-CLAMP	1
13	419-875-1660	BRACKET	1
14	419-875-1640	TUBE	1
15	419-875-1650	BRACKET	1
16	01643-31032	WASHER	2
17	01599-01011	NUT	2
18	01435-01020	BOLT	2
19	07000-05200	O-RING	1
20	419-875-1630	PLATE	1
21	01435-01020	BOLT	6
22	419-60-15210	PLUG	1
23	07000-02060	O-RING	1
24	421-875-1560	COVER	1
25	01643-30823	WASHER	5
26	01010-50825	BOLT	5
27	07260-03216	HOSE	1
28	07283-23442	U-CLAMP	1
29	07260-03265	HOSE	1

FIG 10ARW320.001 GROUND STEERING (PUMP MOUNTING)

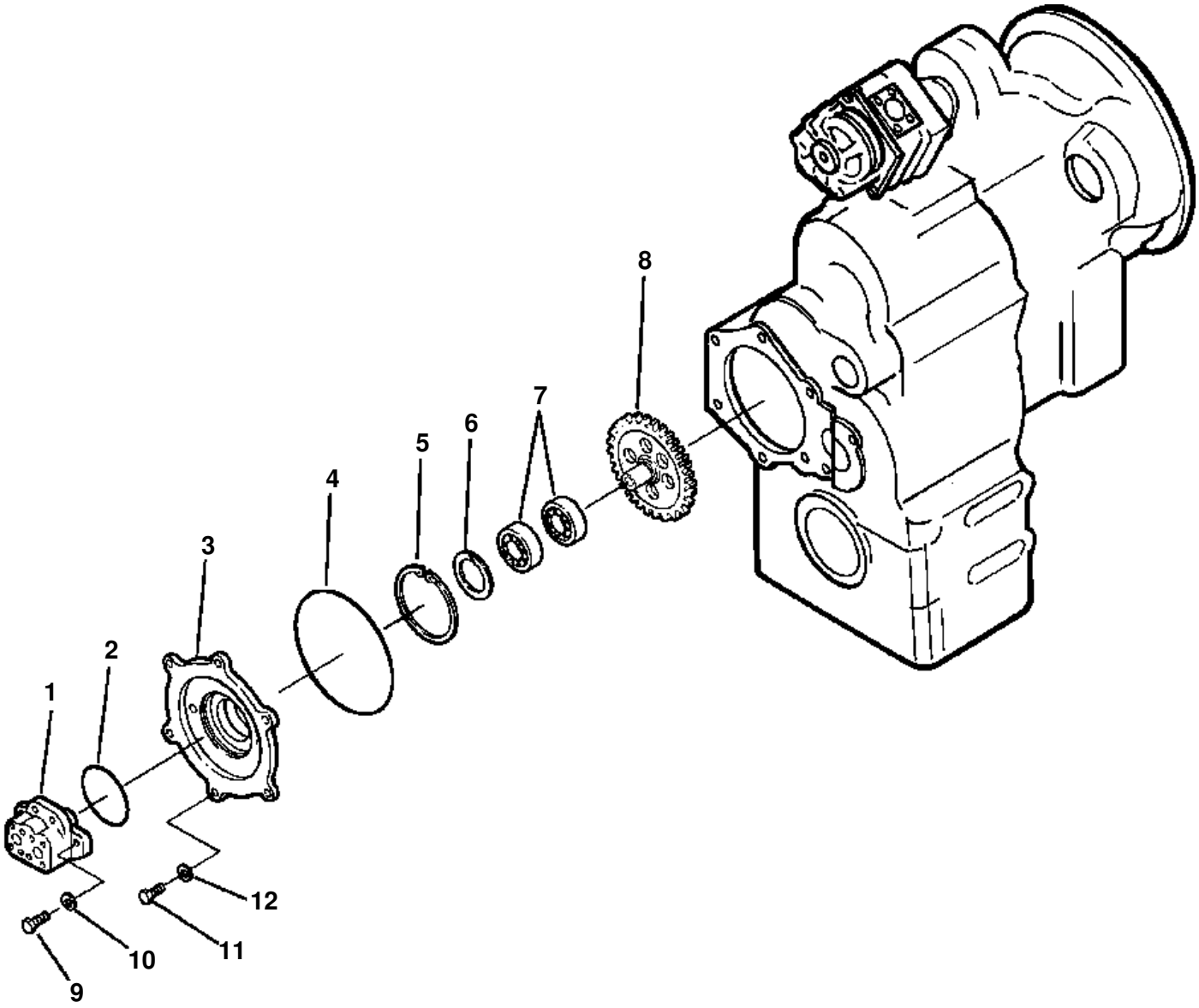

GROUND STEERING (PUMP MOUNTING)

ITEM NO.	PART NO.	DESCRIPTION	Q'TY
1		PUMP (SEE PG 04-026)	
2	07000-02105	O-RING	1
3	419-15-18270	COVER	1
4	07000-05220	O-RING	1
5	04065-06825	SNAP RING	1
6	04064-04018	SNAP RING	1
7	06030-06008	BEARING, BALL	2
8	419-15-14250	GEAR 30T	1
9	01010-31235	BOLT	2
10	01643-31232	WASHER	2
11	01010-31235	BOLT	2
12	01643-31232	WASHER	2

FIG 08CDW320.002 GROUND POWER STEERING (ELECTRICAL INDICATOR WIRING)

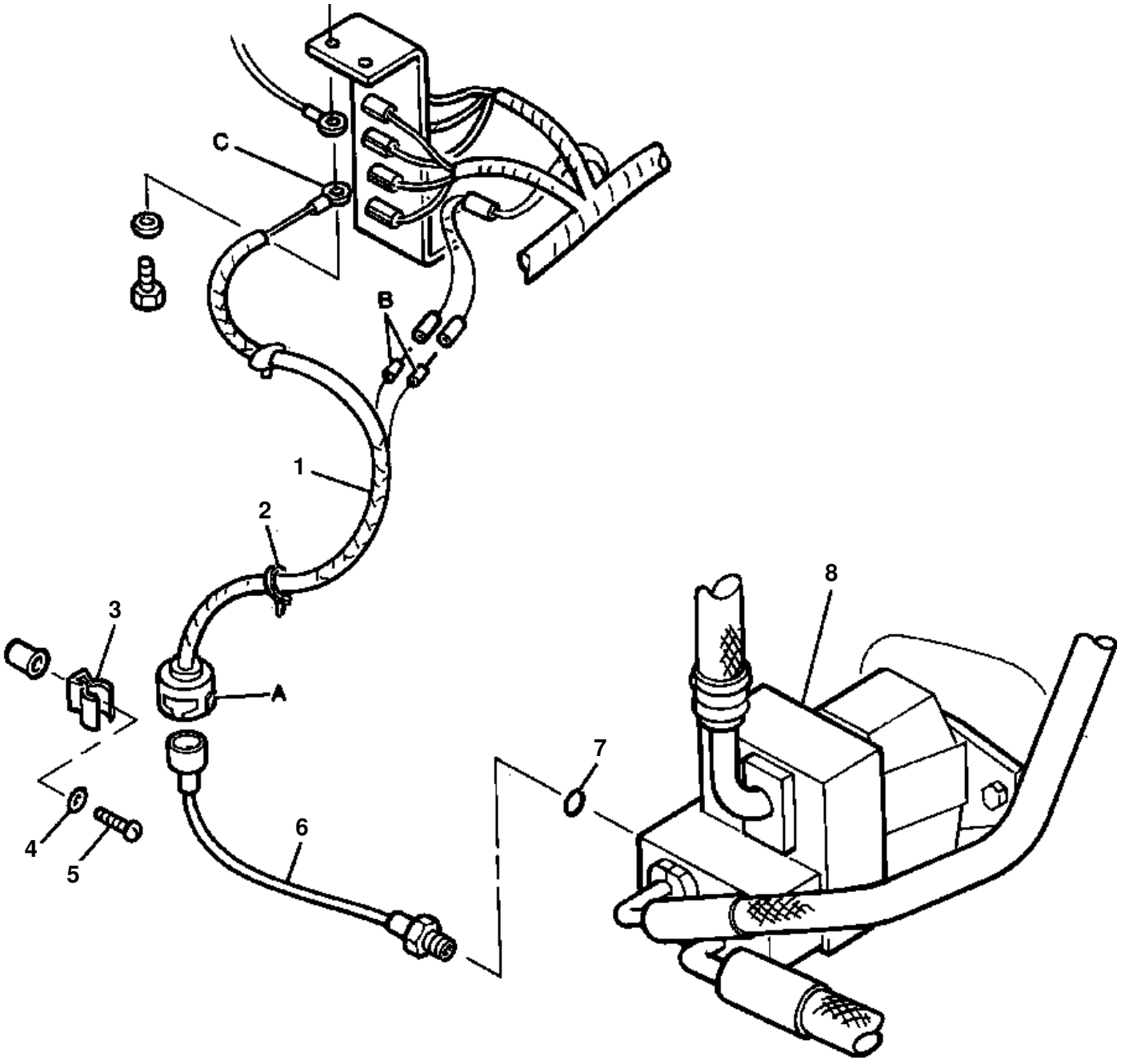

GROUND POWER STEERING (ELECTRICAL INDICATOR WIRING)

ITEM NO.	PART NO.	DESCRIPTION	Q'TY
1	419-06-12780	WIRE	1
a	58206-11960	· CONNECTOR	1
	7816-14-1550	· TERMINAL	2
b	08021-00400	· CONNECTOR	2
c	08031-10510	· TERMINAL	1
2	08034-10510	BAND	2
3	08052-01711	CLIP	1
4	01641-20608	WASHER	1
5	01220-40608	SCREW	1
6	421-06-11982	SENSOR	1
7	07002-02034	O-RING	1
8		DIVIDER VALVE (SEE PG 04-028)	

FRAME, GUARD & SUPERSTRUCTURE

DESCRIPTION
FRONT FRAME
REAR FRAME
FLOOR SUPPORT
FLOOR FRAME AND DASHBOARD
CONSOLE BOX (WITHOUT AIR CONDITIONER OR HEATER)
FENDER AND LADDER
RADIATOR GUARD AND ENGINE HOOD
RADIATOR GUARD AND ENGINE HOOD (LATCHES)
VANDALISM PROTECTION
INSTRUMENT PANEL VANDALISM PROTECTION COVER & LOCK
OPERATOR'S SEAT KOMATSU
OPERATOR'S SEAT MOUNTING (SEAR'S MFG. - S/N N/A AND UP)
OPERATOR'S SEAT SEAR'S MFG. - S/N N/A AND UP
OPERATOR'S SEAT SUSPENSION ASSEMBLY (SEAR'S MANUFACTURING)
SEAT BELT
ROPS CAB MOUNTING PARTS
ROPS CAB (FRONT WINDSHIELD AND WIPER)
ROPS CAB (FRONT WINDOWS AND DOORS)
ROPS CAB (REAR CAB WINDOW)
ROPS CAB (INTERIOR TRIM)
ROPS CAB (LEFT AND RIGHT HAND DOORS)
ROPS CAB (DOOR HANDLES AND LOCKS)
ELECTRICAL SYSTEM (ROPS CAB)
ROPS CANOPY MOUNTING & RAILS
ROPS CAB WINDSHIELD WASHER TANK - S/N A65281 AND UP
MIRRORS AND MOUNTING (WITH HAND RAIL)
AIR CONDITIONER (COMPRESSOR MOUNTING)
AIR CONDITIONER OR HEATER AND DEFROSTER (MOUNTING PARTS)
AIR CONDITIONER OR HEATER AND DEFROSTER PIPING (ENGINE TO HEATER CORE)
AIR CONDITIONER PIPING CONDENSER, RECEIVER, COMPRESSOR, A/C UNITS
AIR CONDITIONER CONDENSER MOUNTING
AIR CONDITIONER UNIT (CONTROLS AND PANEL)
AIR CONDITIONER EVAPORATOR AND HEATER COIL
AIR CONDITIONER CONDENSER ASSEMBLY
AIR CONDITIONER COMPRESSOR AND CLUTCH
AIR CONDITIONER OR HEATER UNIT BLOWER AND FAN

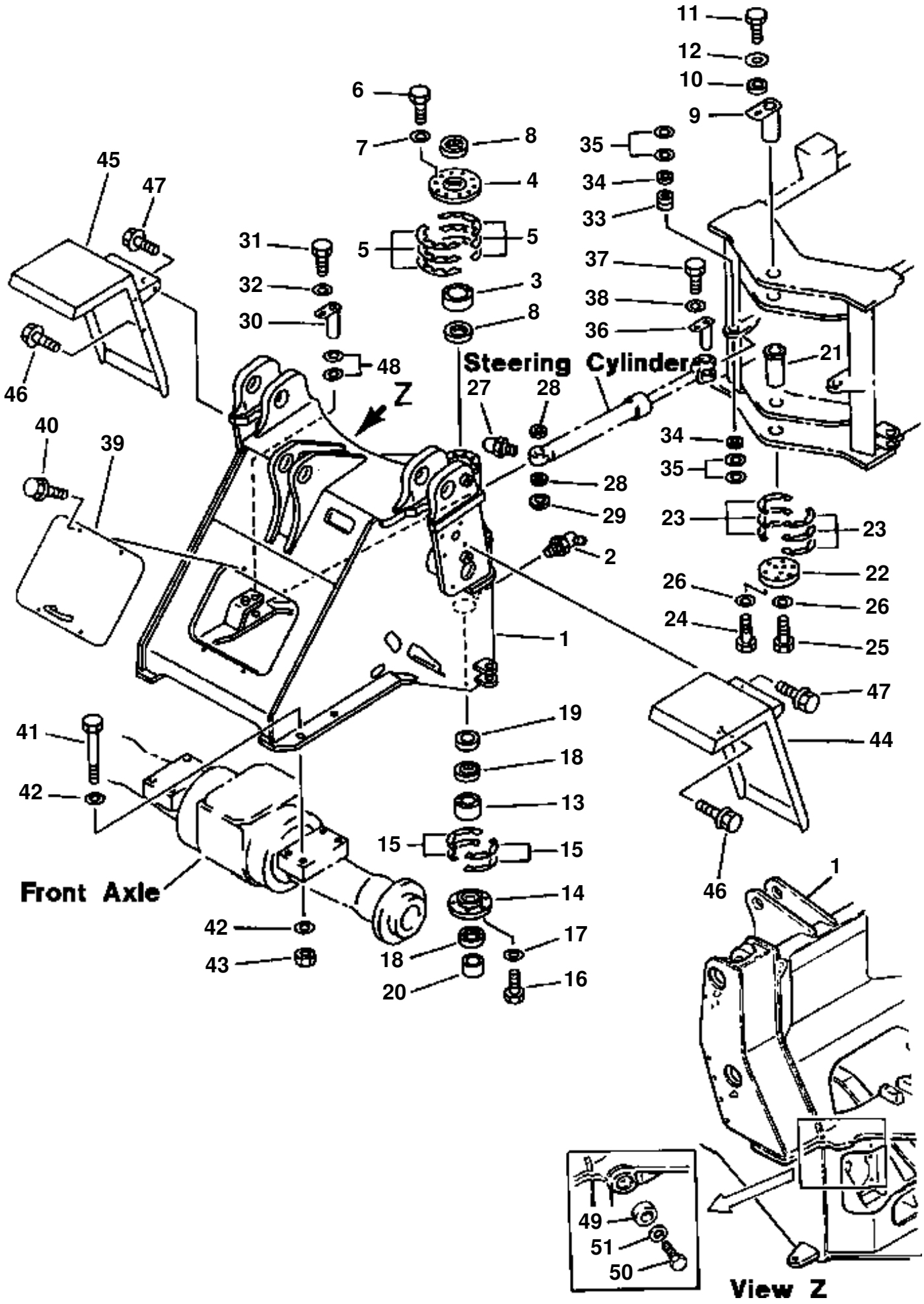
11
12
10
9
6
7
8
4
5
5
3
8
35
34
33
37
38
36
21
45
47
31
32
30
48
46
Z
27
28
Steering Cylinder
40
39
28
29
2
1
34
35
23
23
22
26
26
24
25
47
44
41
42
19
18
13
15
15
14
17
16
Front Axle
42
43
18
20
46
1
49
51
50
View Z

FRONT FRAME

ITEM NO.	PART NO.	DESCRIPTION	Q'TY
1	419-46-11410	FRAME, FRONT	1
2	07020-00675	FITTING, GREASE	1
3	419-46-11360	BEARING	1
4	419-46-11350	RETAINER	1
5	421-46-11371	SHIM, 0.1mm	10
	421-46-11381	SHIM, 0.5mm	4
6	01010-51230	BOLT	10
7	01643-31232	WASHER	10
8	419-09-11110	SEAL, DUST	2
9	419-46-11330	PIN	1
10	419-46-11340	BUSHING	1
11	01010-51640	BOLT	1
12	421-70-11280	WASHER	1
13	419-46-11281	BEARING	1
14	419-46-11200	RETAINER	1
15	419-46-11250	SHIM, 0.1mm	8
	419-46-11260	SHIM, 0.5mm	2
	419-46-11270	SHIM, 1.0mm	4
16	01010-51240	BOLT	6
17	01643-31232	WASHER	6
18	419-46-11230	SEAL, DUST	2
19	419-46-11170	SPACER	1
20	419-46-11180	SPACER	1
21	419-46-11160	SHAFT	1
22	419-46-11190	SUPPORT	1
23	419-46-11211	SHIM, 0.1mm	8
	419-46-11221	SHIM, 0.5mm	6
24	01010-51245	BOLT	6
25	01010-51265	BOLT	3
26	01643-31232	WASHER	9
27	07020-00675	FITTING, GREASE	2
28	419-09-11120	SEAL, DUST	4
29	419-46-12250	SPACER	2
30	419-46-12240	PIN	2
31	01010-51220	BOLT	2
32	175-54-34170	WASHER	2
33	419-46-12270	BUSHING	2
34	419-09-11120	SEAL, DUST	4
35	419-46-12290	SHIM, 0.5mm	4
	419-46-12280	SHIM, 1.0mm	8
36	419-46-12260	PIN	2
37	01010-51220	BOLT	2
38	175-54-34170	WASHER	2
39	419-46-11140	COVER, FRONT	1
40	01435-01225	BOLT	4
41	01011-32445	BOLT	8
42	01643-32460	WASHER	16
43	01580-02419	NUT	8
44	419-54-11524	FENDER, FRONT LH	1
45	419-54-11514	FENDER, FRONT RH	1
46	01435-01225	BOLT	4
47	01435-01230	BOLT	2
48	419-46-12290	SHIM, 0.5mm	2
	419-46-12280	SHIM, 1.0mm	4
49	419-46-11210	BUMPER	2
50	01010-51225	BOLT	2
51	01643-31232	WASHER	2

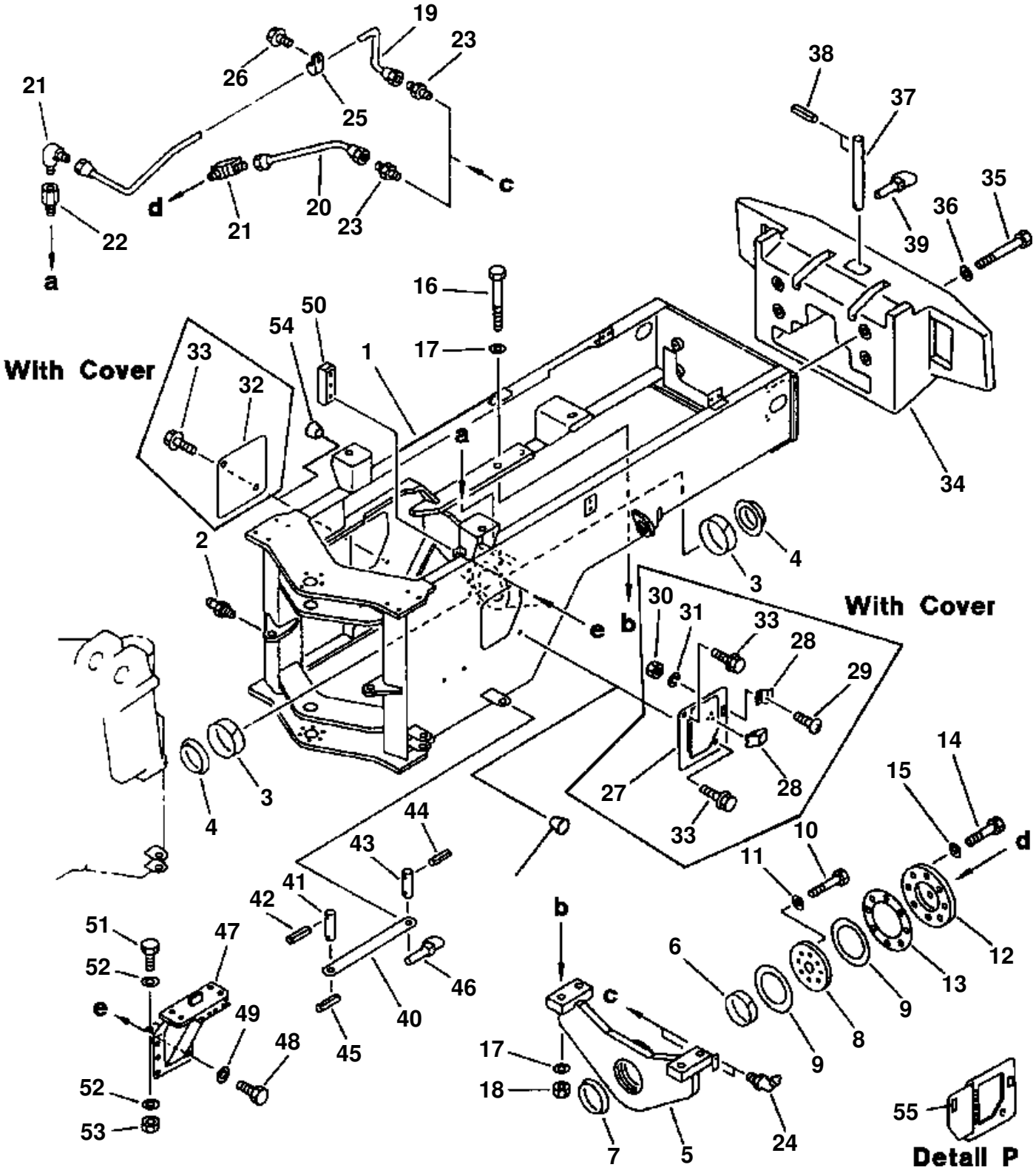
With Cover
With Cover
Detail P

REAR FRAME

ITEM NO.	PART NO.	DESCRIPTION	Q'TY
1	419-46-12900	FRAME, REAR	1
2	07020-00000	FITTING, GREASE	2
3	419-46-12180	PACKING	2
4	419-46-12480	PACKING	2
5	419-46-12135	SUPPORT, REAR AXLE	1
6	419-46-12390	PACKING	1
7	419-46-12490	PACKING	1
8	419-46-12380	PLATE, THRUST	1
9	419-46-12450	WASHER, THRUST	2
10	01010-31660	BOLT	8
11	01643-31645	WASHER	8
12	419-46-12431	COVER	1
13	419-46-12321	SHIM, 0.2mm	3
14	01010-31655	BOLT	7
15	01643-31645	WASHER	7
16	01011-32420	BOLT	4
17	01643-32460	WASHER	8
18	01580-02419	NUT	4
19	419-46-18151	TUBE, REAR AXLE LUBRICATOR	1
20	419-46-18123	TUBE, REAR AXLE LUBRICATOR	1
21	07217-50510	ELBOW	2
22	423-46-11140	NIPPLE	1
23	07214-50510	CONNECTOR	2
24	07020-00675	FITTING, GREASE	2
25	08036-10814	CLIP	1
26	01435-01016	BOLT	1
27	419-46-12361	COVER	1
28	421-09-12321	HOLDER	1
29	01220-40412	SCREW	5
30	01580-10403	NUT	5
31	01601-20410	WASHER, SPRING	5
32	418-46-12221	PLATE, R.H	1
33	01435-01225	BOLT	4
34	419-46-13141	WEIGHT, COUNTER WT. 1130 Kg	1
	419-97-51210	WEIGHT, COUNTER	1
	11196-16150	· BOLT	4
	419-97-41310	WEIGHT, COUNTER (LOGGER)	1
35	421-975-1130	BOLT	4
36	419-09-11411	WASHER	4
37	419-46-13122	PIN	1
38	04025-01090	· PIN, SPRING	2
39	426-46-12280	PIN, LINCH	1
40	421-46-12920	BAR, LOCK	1
41	421-46-12721	PIN	1
42	04025-01065	· PIN, SPRING	1
43	04025-01065	PIN, SPRING	1
44	421-46-12731	PIN	1
45	04025-01065	· PIN	2
46	421-46-12740	PIN, LINCH	1
47	419-928-1110	SUPPORT	2
48	01010-52475	BOLT	12
49	01643-32460	WASHER	12
50	419-928-1230	PLATE	4
51	01010-52055	BOLT	2
52	01643-32060	WASHER	2
53	01580-12016	NUT	2
54	07049-01620	PLUG (WITHOUT COVER)	4
	07049-01215	PLUG	4
55	421-09-12780	CUSHION, STRIP	1

FIG 13AZW320.001 **FLOOR SUPPORT**

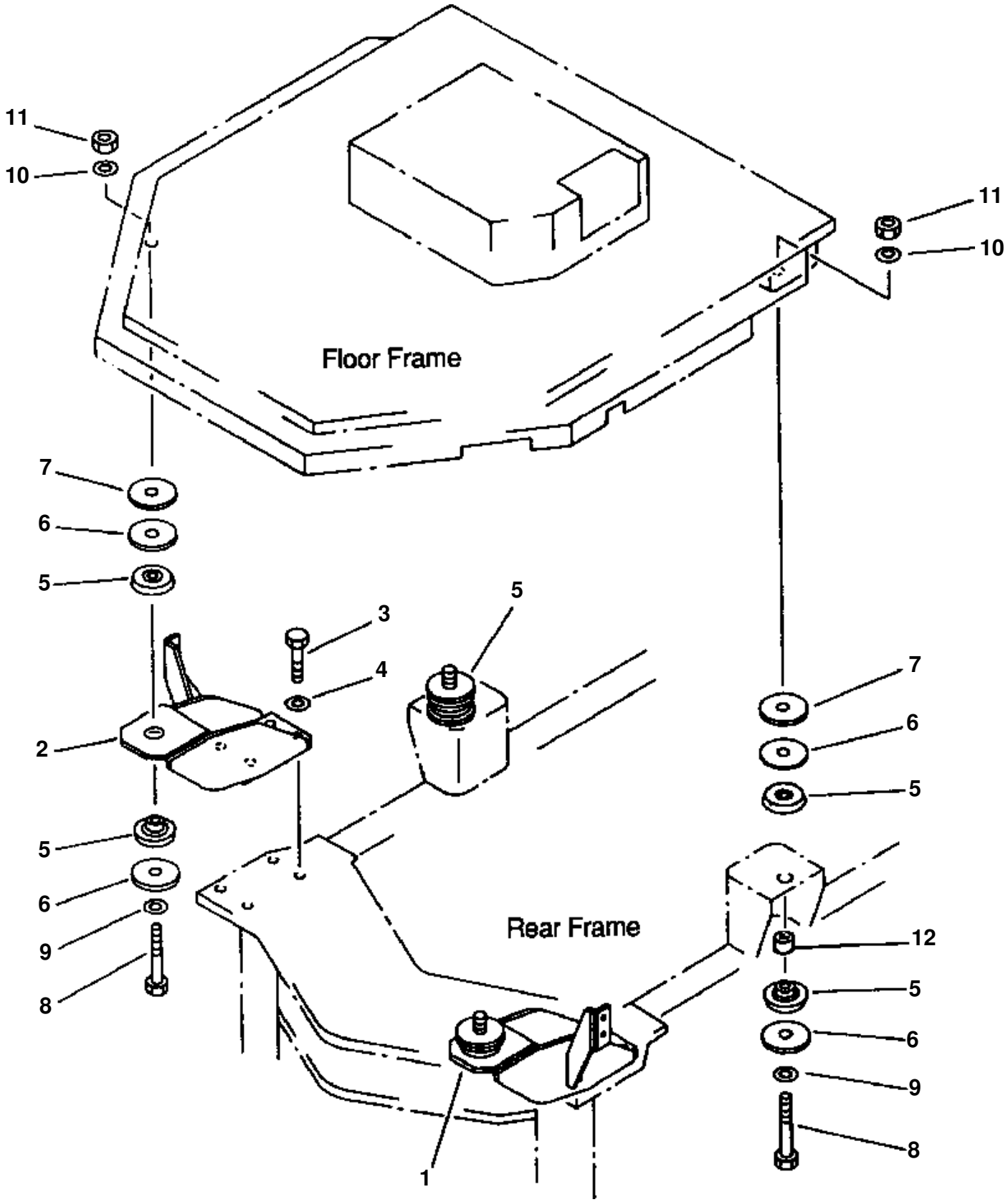

FLOOR SUPPORT

ITEM NO.	PART NO.	DESCRIPTION	Q'TY
1	421-54-13282	BRACKET, L.H	1
2	421-54-13292	BRACKET, R.H	1
3	01010-51655	BOLT	8
4	01643-31645	WASHER	8
5	425-54-13530	CUSHION	8
6	425-54-13170	PLATE	8
7	419-54-13130	PLATE	4
8	01011-51620	BOLT	4
9	01643-31645	WASHER	4
10	416-40-11150	WASHER	4
11	421-40-11510	NUT, LOCK	4
12	419-54-13490	SPACER	4

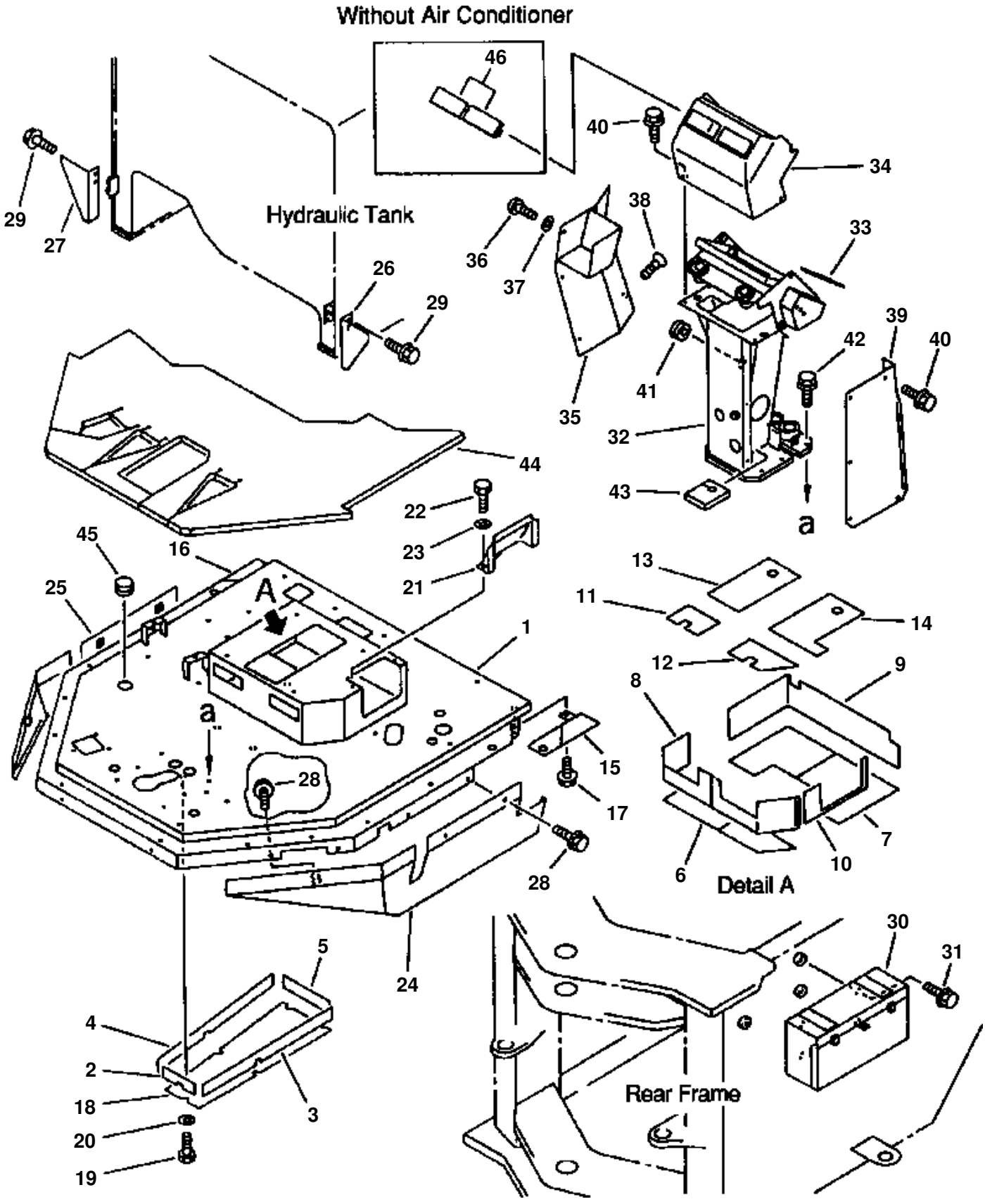
Without Air Conditioner
Hydraulic Tank
Detail A
Rear Frame
A
a
46
40
34
29
27
38
36
37
33
26
29
39
42
40
41
35
32
44
43
22
23
21
45
16
13
11
14
25
1
12
9
8
15
28
17
7
6
10
28
30
31
5
24
4
2
18
20
19
3

FLOOR FRAME AND DASHBOARD

ITEM NO.	PART NO.	DESCRIPTION	Q'TY
1	419-54-13700	FLOOR ASSEMBLY	1
	419-54-13710	· FLOOR	1
2	421-54-18330	· INSULATOR	1
3	421-54-18340	· INSULATOR	1
4	421-54-18350	· INSULATOR	1
5	421-54-18360	· INSULATOR	1
6	419-54-13320	· INSULATOR	1
7	419-54-13330	· INSULATOR	1
8	419-54-13340	· INSULATOR	1
9	419-54-13350	· INSULATOR	1
10	419-54-13360	· INSULATOR	1
11	419-54-13370	· INSULATOR	1
12	419-54-13380	· INSULATOR	1
13	419-54-13390	· INSULATOR	1
14	419-54-13410	· INSULATOR	1
15	419-54-13250	COVER, L.H	1
16	419-54-13260	COVER, R.H	1
N/I	01435-00610	· BOLT	2
17	01435-01220	BOLT	2
18	419-54-12280	COVER	1
19	01010-50816	BOLT	5
20	01643-30823	WASHER	5
21	425-54-12570	COVER	1
22	01010-50825	BOLT	2
23	01643-30823	WASHER	2
24	419-54-13640	COVER, L.H	1
25	419-54-13650	COVER, R.H	1
26	419-54-13510	COVER, L.H	1
27	419-54-13520	COVER, R.H	1
28	01435-01220	BOLT	6
29	01435-00814	BOLT	4
30	416-54-14132	BOX, TOOL	1
31	01435-01220	BOLT	4
32	421-54-12217	SUPPORT	1
33	421-54-12273	INSULATOR	1
34	419-U56-1190	COVER	1
35	421-54-12871	COVER	1
36	01220-40816	SCREW	2
37	01643-30823	WASHER	2
38	424-54-12540	SCREW	2
39	421-54-12875	COVER	1
40	01435-00816	BOLT	12
41	09415-02512	CAP	1
42	01435-01230	BOLT	5
43	410-54-12481	SEAL	1
44	419-54-12234	MAT, FLOOR	1
45	09415-03614	CAP	1
46	424-09-12610	COVER (WITHOUT AIR CONDITIONER)	4
N/I	09415-02512	GROMMET	1

FIG 13AZW320.003 CONSOLE BOX (WITHOUT AIR CONDITIONER OR HEATER)

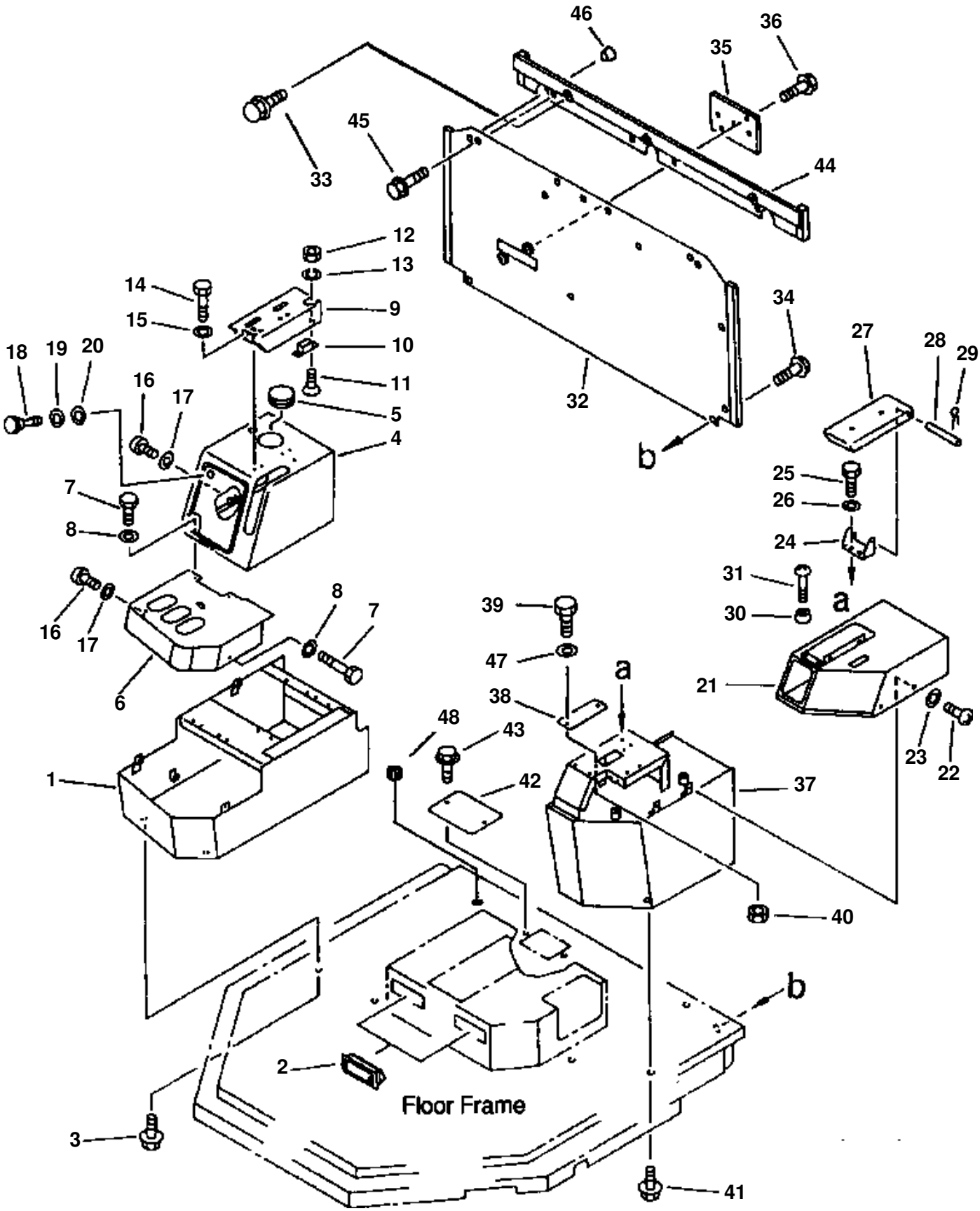

CONSOLE BOX (WITHOUT AIR CONDITIONER OR HEATER)

ITEM NO.	PART NO.	DESCRIPTION	Q'TY
1	419-54-12644	BOX	1
2	421-07-12512	GRILLE	2
3	01435-01220	BOLT	4
4	419-54-12653	BOX	1
5	419-54-12280	CAP (WITHOUT ODOMETER)	1
6	419-54-12332	COVER	1
7	01010-50816	BOLT	5
8	01643-30823	WASHER	5
9	419-54-12682	BRACKET	1
10	09452-06506	CATCHER	1
11	01224-40412	SCREW	2
12	01580-10403	NUT	2
13	01601-20410	WASHER, SPRING	2
14	01010-50616	BOLT	4
15	01643-30623	WASHER	4
16	01220-70612	SCREW	2
17	01642-40608	WASHER	2
18	425-54-12960	SCREW	1
19	01642-20608	WASHER	1
20	01643-30623	WASHER	1
21	425-54-12671	COVER	1
22	01220-70616	SCREW	4
23	01642-40608	WASHER	4
24	425-54-12520	PLATE	1
25	01010-51020	BOLT	2
26	01643-31032	WASHER	2
27	425-54-12510	BRACKET	1
28	425-54-12530	SHAFT	1
29	04050-13018	PIN, COTTER	2
30	425-54-12590	STOPPER, RUBBER	2
31	01220-30420	SCREW	2
32	419-54-13420	COVER	1
33	01435-01240	BOLT	3
34	01435-01220	BOLT	7
35	419-54-12452	PLATE	1
36	01435-01235	BOLT	2
37	424-54-12830	BOX	1
38	424-54-12820	PLATE	1
39	01010-51025	BOLT	2
40	01580-11008	NUT	2
41	01435-01225	BOLT	3
42	419-54-12260	PLATE	1
43	01435-00610	BOLT	2
44	419-54-13461	COVER	1
45	01435-01016	BOLT	4
46	07049-01215	PLUG	3
47	01643-31032	WASHER	2
48	09415-02512	GROMMET	1

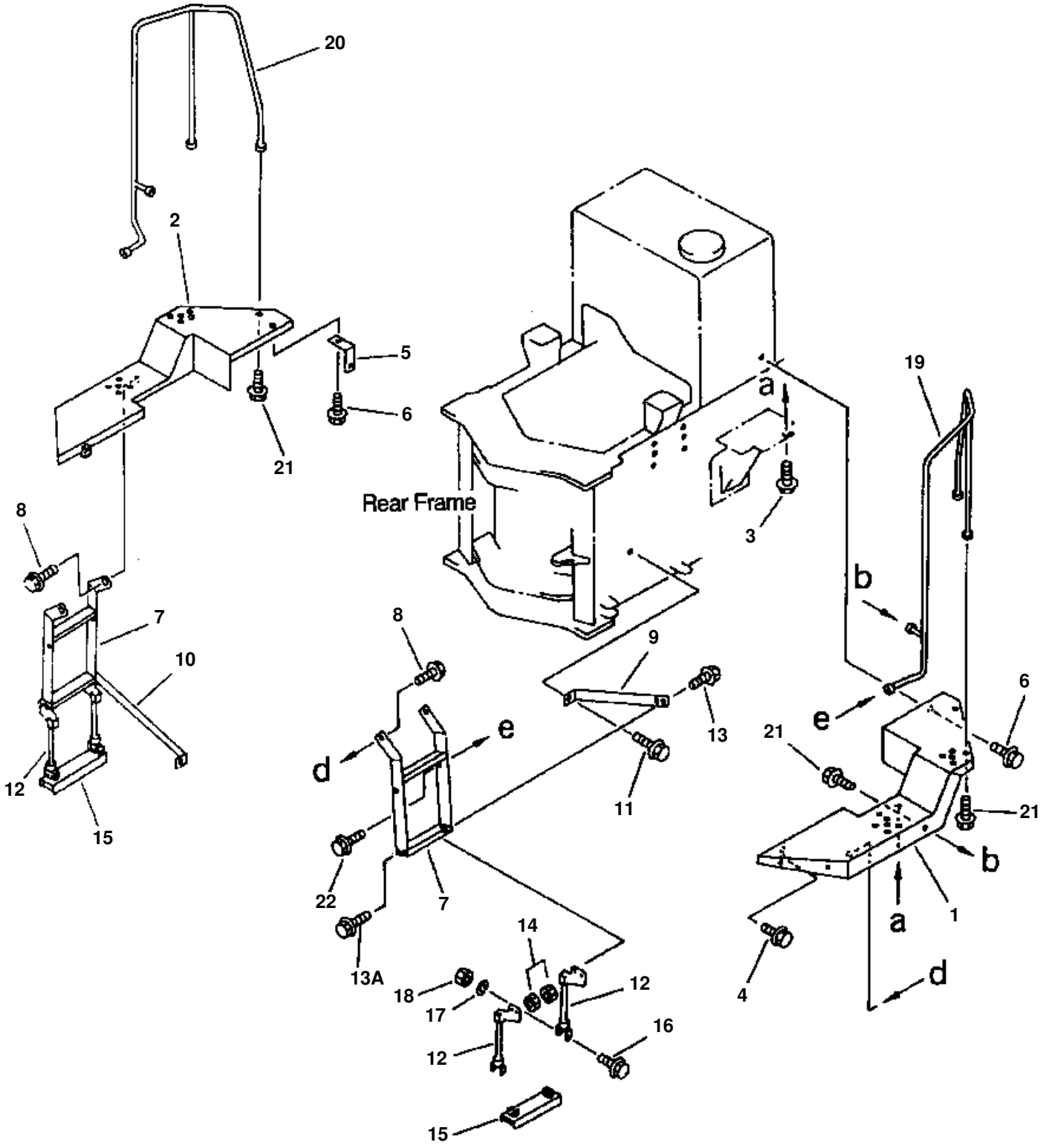
20
2
5
6
21
8
7
10
12
15
Rear Frame
a
3
19
b
8
9
13
11
d
e
22
7
13A
14
18
17
12
16
15
6
21
21
b
a
1
4
d

FENDER AND LADDER

ITEM NO.	PART NO.	DESCRIPTION	Q'TY
1	419-54-11562	FENDER, PLATFORM LH	1
2	419-54-11552	FENDER, PLATFORM RH	1
3	01435-01225	BOLT	4
4	01435-01260	BOLT	4
5	419-54-11750	PLATE	2
6	01435-01230	BOLT	4
7	419-54-14360	LADDER, ENTRY	2
8	01435-01235	BOLT	4
9	419-54-14570	SUPPORT, LH	1
10	419-54-14580	SUPPORT, RH	1
11	01435-01240	BOLT	2
12	419-54-14490	WIREROPE FOR STEP	4
13	01435-01240	BOLT	4
13A	01345-01230	BOLT	4
14	01580-01210	NUT	8
15	423-54-12770	STEP	2
16	01435-01270	BOLT	4
17	01643-31232	WASHER	4
18	426-43-19150	NUT	4
19	419-54-12182	RAIL, LH HAND (ENTRY)	1
20	419-54-12192	RAIL, RH HAND (ENTRY)	1
21	01435-01225	BOLT	6
22	01435-01230	BOLT	2

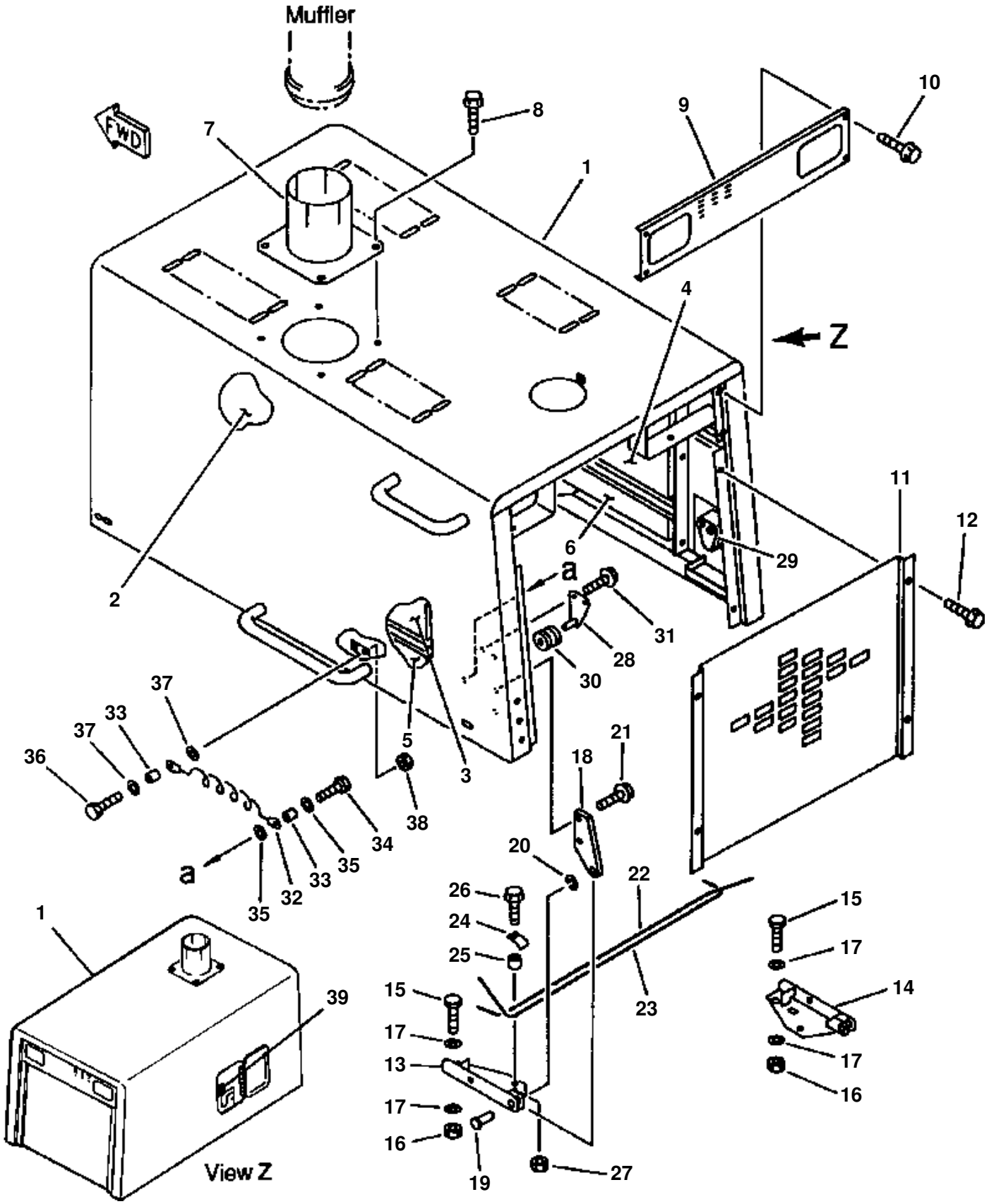
Muffler
FWD
Z
a
View Z
1
2
3
4
5
6
7
8
9
10
11
12
13
14
15
16
17
18
19
20
21
22
23
24
25
26
27
28
29
30
31
32
33
34
35
36
37
38
39

RADIATOR GUARD AND ENGINE HOOD

ITEM NO.	PART NO.	DESCRIPTION	Q'TY
1	419-54-11820	HOOD	1
2	419-54-11162	SHEET	2
3	419-54-11183	SHEET, LH	1
4	419-54-11492	SHEET, RH	1
5	419-54-11172	SHEET, LH	1
6	419-54-11580	SHEET, RH	1
7	419-02-11111	BRACKET	1
8	01435-01225	BOLT	4
9	419-54-11141	PLATE	1
10	01435-00825	BOLT	4
11	419-54-11740	GRILLE	1
12	01435-01225	BOLT	4
13	419-54-11222	HINGE, LH	1
14	419-54-11212	HINGE, RH	1
15	01010-31245	BOLT	4
16	01580-01210	NUT	4
17	01643-31232	WASHER	8
18	424-54-11282	PLATE	2
19	04205-12060	PIN	2
20	01602-22032	WASHER, SPRING	2
21	01435-01225	BOLT	4
22	419-54-11260	SPRING, LH	1
23	419-54-11250	SPRING, RH	1
24	424-54-11341	CLAMP	2
25	419-54-11270	SPACER	2
26	01435-01225	BOLT	2
27	01584-01210	NUT	2
28	419-54-11290	SUPPORT, LH	1
29	419-54-11280	SUPPORT, RH	1
30	424-54-11380	ROLLER	2
31	01435-01230	BOLT	4
32	419-54-11670	CABLE	2
33	424-54-14230	SPACER	4
34	01010-51230	BOLT	2
35	424-54-14220	WASHER	4
36	01010-51245	BOLT	2
37	424-54-14220	WASHER	4
38	01580-01210	NUT	2
39	421-09-12780	STRIP, CUSHION	1
N/I	42A-92-51281	SHIM (MOUNTING ADJUSTMENT)	5

FIG 13ADW320.002 RADIATOR GUARD AND ENGINE HOOD (LATCHES)

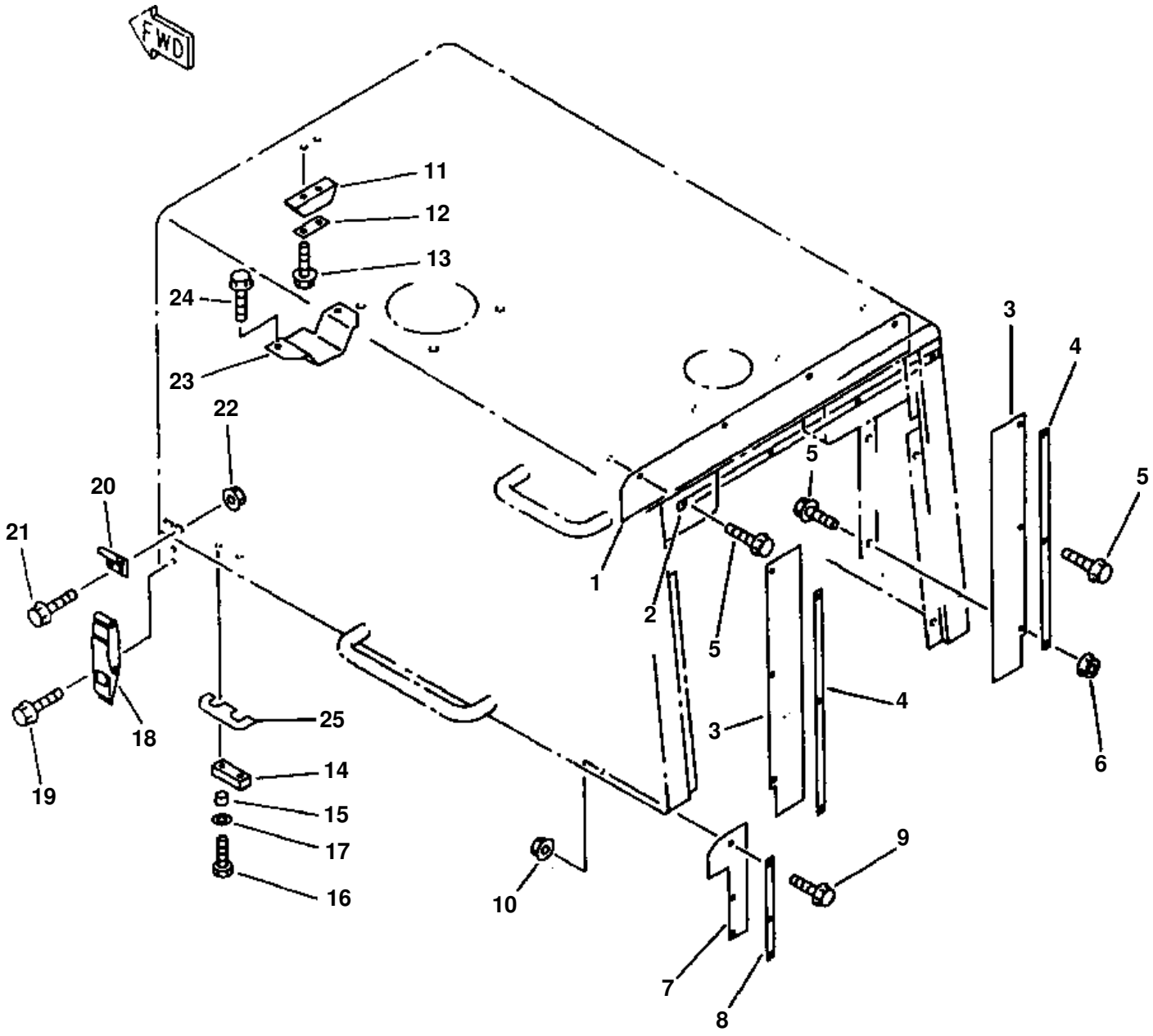

RADIATOR GUARD AND ENGINE HOOD (LATCHES)

ITEM NO.	PART NO.	DESCRIPTION	Q'TY
1	419-54-11360	SHEET	1
2	419-54-11370	PLATE	1
3	419-54-11190	SHEET	2
4	419-54-11390	PLATE	2
5	01435-00820	BOLT	10
6	01584-00806	NUT	2
7	419-54-11620	SHEET	2
8	419-54-11610	SHEET	4
9	01435-00820	BOLT	6
10	01584-00806	NUT	2
11	424-54-11560	BLOCK	1
12	424-54-11570	PLATE	1
13	01435-01020	BOLT	2
14	419-54-11690	SEAT	2
15	424-54-14380	COLLAR	4
16	01010-50830	BOLT	4
17	154-61-16570	WASHER	4
18	423-54-11951	CATCH ASSEMBLY	2
19	01435-00812	BOLT	4
20	423-54-11962	HOOK	2
21	01435-00825	BOLT	4
22	01584-00806	NUT	4
23	419-54-11430	SUPPORT	1
24	01435-01225	BOLT	2
25	423-54-11820	SHIM, 1.2mm	2

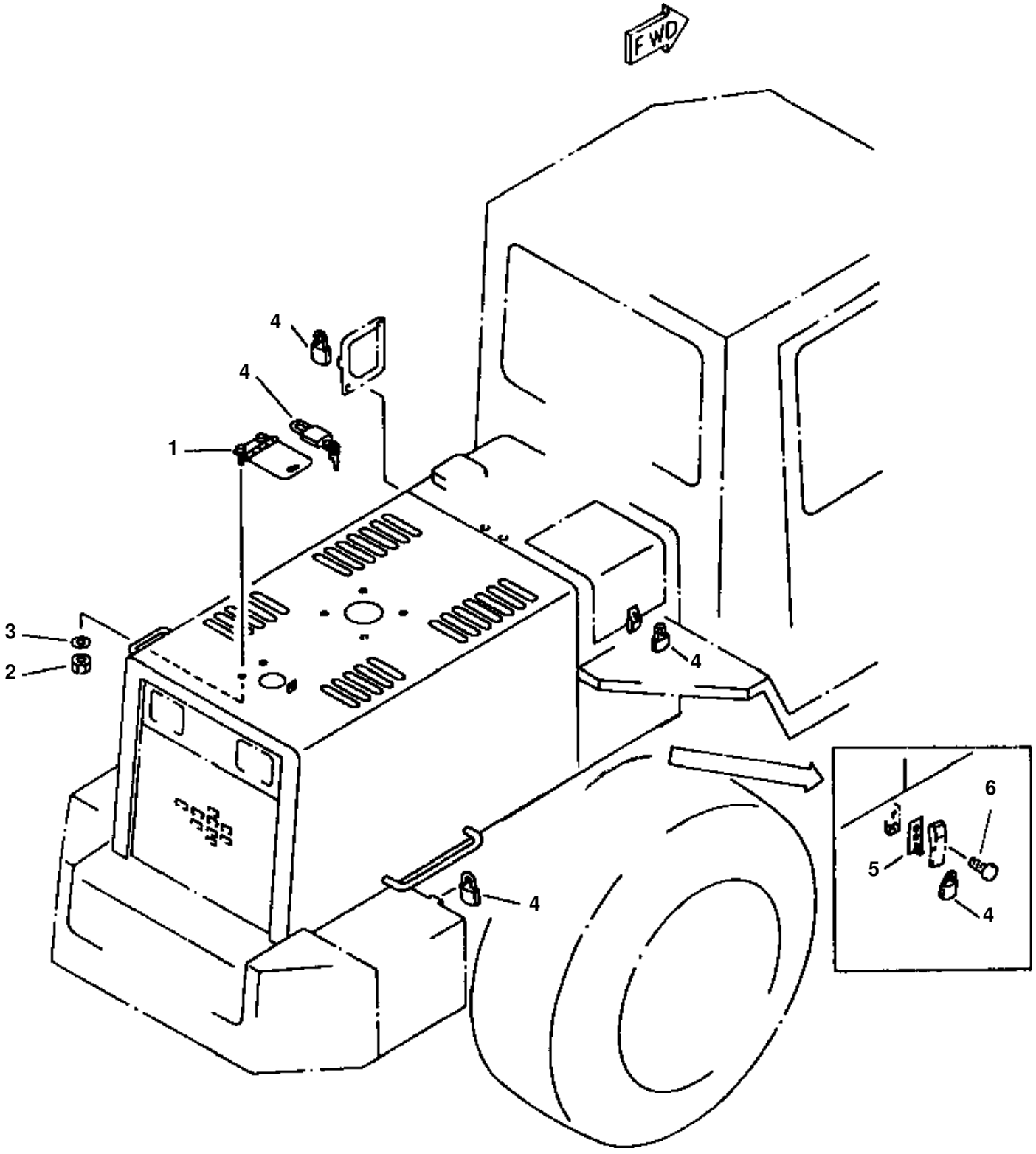
FWD
4
4
1
3
2
4
4
6
5
4

VANDALISM PROTECTION

ITEM NO.	PART NO.	DESCRIPTION	Q'TY
1	419-54-11660	PLATE	1
2	01580-00605	NUT	2
3	01643-30623	WASHER	2
4	09460-00006	PADLOCK (SET OF 6)	1
5	423-979-1170	PLATE	1
6	01435-00816	BOLT	2

FIG 02ZZW320.002 INSTRUMENT PANEL VANDALISM PROTECTION COVER & LOCK

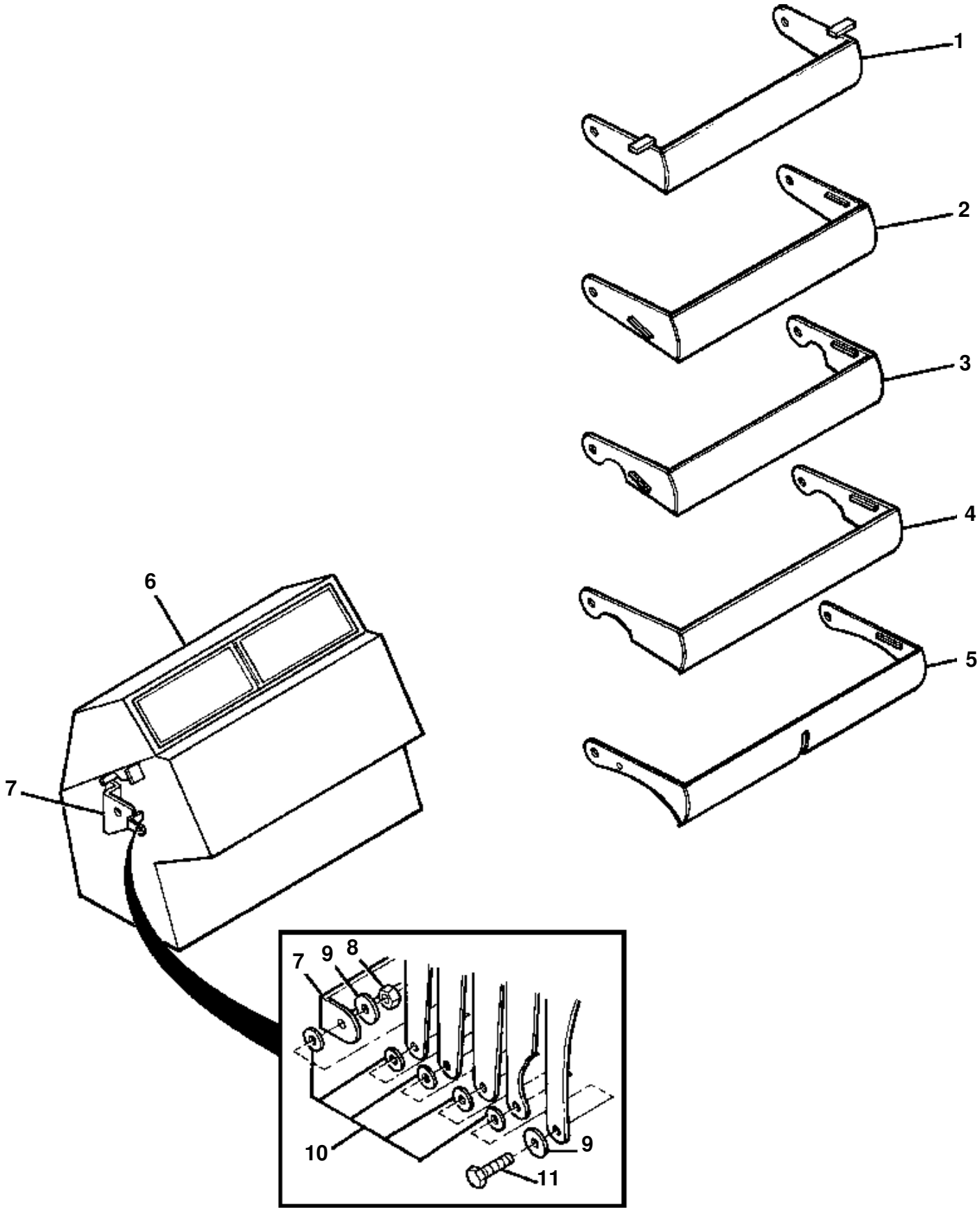

INSTRUMENT PANEL VANDALISM PROTECTION COVER & LOCK

ITEM NO.	PART NO.	DESCRIPTION	Q'TY
1	419-U56-1110	COVER, PANEL	1
2	419-U56-1120	COVER, PANEL	1
3	419-U56-1130	COVER, PANEL	1
4	419-U56-1140	COVER, PANEL	1
5	419-U56-1150	COVER, PANEL	1
6	419-U56-1190	COVER ASSEMBLY, PANEL	1
7	419-U56-1160	· BRACKET, L.H	1
	419-U56-1170	· BRACKET, R.H	1
N/I	419-U56-1180	· STOPPER	1
8	01598-01214	NUT	2
9	01643-31232	WASHER	4
10	01640-21223	WASHER, FLAT	5
	01603-01220	WASHER, WAVE	5
11	01010-51250	BOLT	2
N/I	09460-00000	LOCK	1

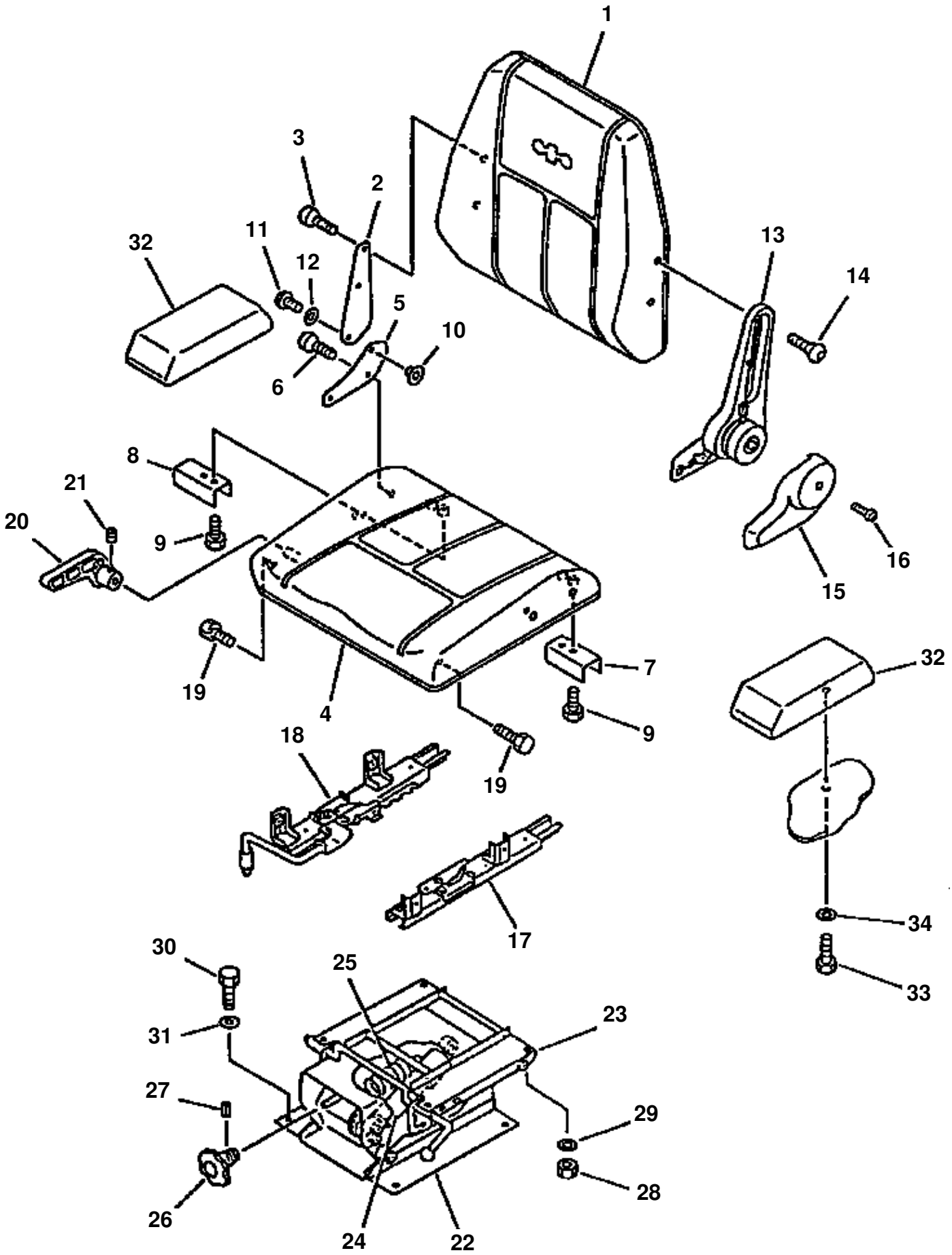
1
3
2
11
12
32
5
10
6
13
14
8
21
20
9
16
15
19
4
7
9
32
18
19
34
17
30
25
23
31
27
29
28
26
24
22
33

OPERATOR'S SEAT KOMATSU

ITEM NO.	PART NO.	DESCRIPTION	Q'TY	REF
	423-57-11104	SEAT ASSEMBLY, OPERATOR'S	1	F3
	423-57-11303	· SEAT ASSEMBLY	1	
1	423-57-11320	· · CUSHION, BACK	1	
2	423-57-11490	· · · BRACKET	1	
3	423-57-11380	· · · BOLT	2	
4	423-57-11310	· · CUSHION, SEAT	1	
N/I	423-57-11650	· · · SPRING	1	
5	423-57-11450	· · · BRACKET	1	
6	423-57-11380	· · · BOLT	2	
7	423-57-11470	· · · BRACKET, L.H	1	
8	423-57-11480	· · · BRACKET, R.H	1	
9	423-57-11460	· · · BOLT	4	
10	423-57-11420	· · BUSHING	1	
11	423-57-11430	· · SCREW	1	
12	423-57-11440	· · WASHER	1	
13	423-57-11330	· · RECLINING ASSEMBLY	1	
14	423-57-11380	· · BOLT	4	
15	423-57-11371	· · COVER	1	
16	423-57-11160	· · SCREW	1	
17	423-57-11350	· · SLIDE, L.H	1	
18	423-57-11340	· · SLIDE. R.H	1	
19	423-57-11390	· · BOLT	4	
20	423-57-11360	· · LEVER	1	
21	423-54-11410	· · SCREW	1	
22	423-57-11400	· SUSPENSION ASSEMBLY	1	
23	423-57-11530	· · ADJUSTER, TILT	1	
24	423-57-11520	· · ABSORBER	1	
25	423-57-11510	· · SPRING	1	
26	423-57-11630	· · KNOB	1	
27	423-57-11640	· · PIN, SPRING	1	
28	423-57-11130	· NUT	4	
29	423-57-11150	· WASHER	4	
30	01010-51225	BOLT	4	F1
	01435-01220	BOLT	4	F2
31	01643-31232	WASHER	4	F1
32	421-57-11141	REST, ARM	2	
33	01010-50820	BOLT	4	F1
	01435-00820	BOLT	4	F2
34	01643-30823	WASHER	4	F1
		F1 - MOUNTING HARDWARE USED ON MODELS WA450-2 AND WA500-1L ONLY.		
		F2 - MOUNTING HARDWARE USED ON MODEL WA380-1LC & WA420-1LC ONLY.		
		F3 - WHOLE SEAT ASSEMBLY AND SUSPENSION MUST BE REPLACED, IF CONVERTING TO SEAR'S SEAT PART NUMBER 423-57-A1100.		

FIG 13BHW320.001 OPERATOR'S SEAT MOUNTING (SEAR'S MFG. - S/N N/A AND UP)

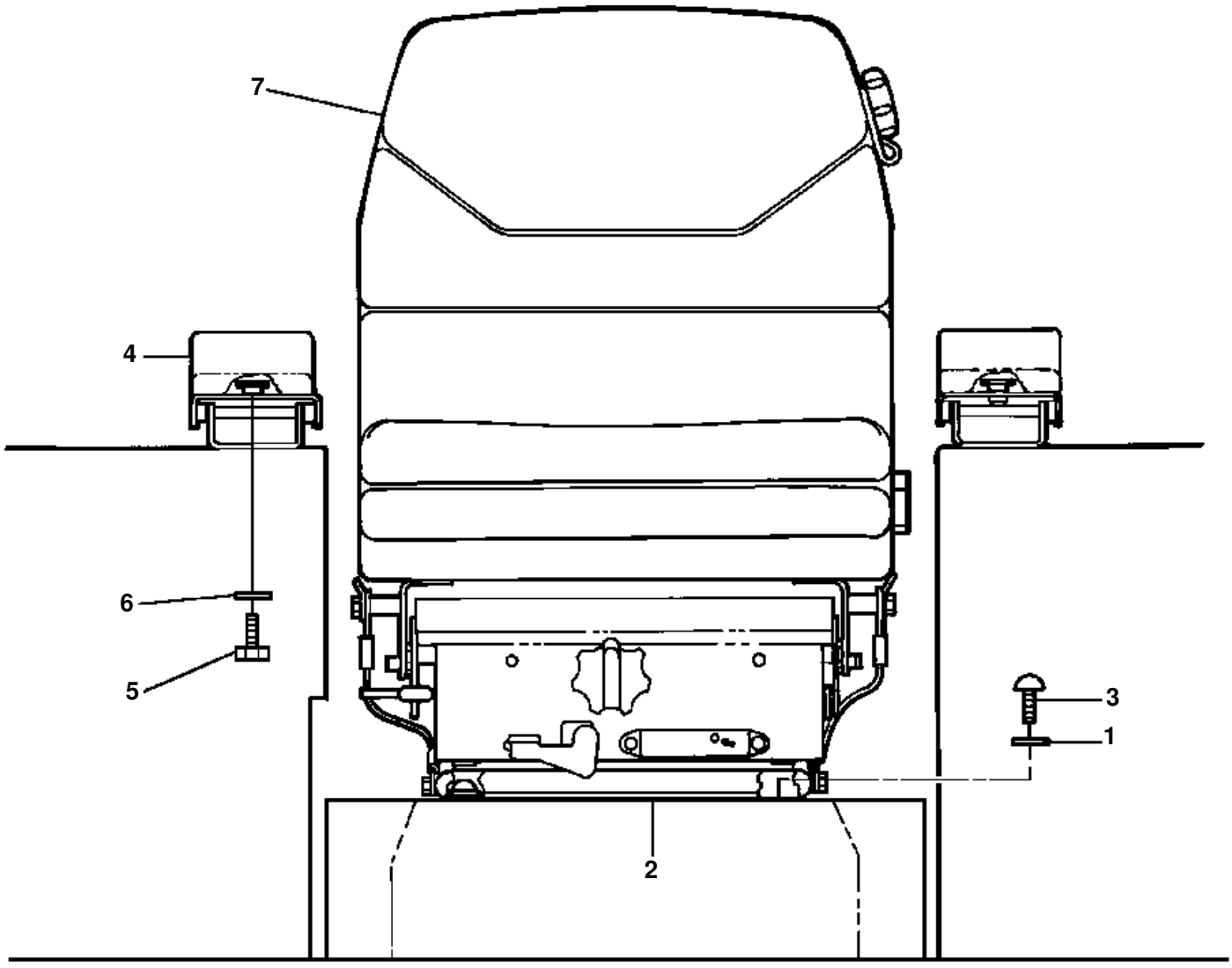

OPERATOR'S SEAT MOUNTING (SEAR'S MFG. - S/N N/A AND UP)

ITEM NO.	PART NO.	DESCRIPTION	Q'TY
1	01643-31232	WASHER	4
2	423-54-A1110	PLATE, MOUNTING	1
3	423-57-A1490	SCREW, SOCKET BUTTON HEAD	4
4	421-57-11141	REST, ARM	2
5	01010-50820	BOLT	4
6	01643-30823	WASHER	4
7		SEAT ASSEMBLY, OPERATOR'S (SEE PG 05-038)	

FIG 13BHW320.002 OPERATOR'S SEAT SEAR'S MFG. - S/N N/A AND UP

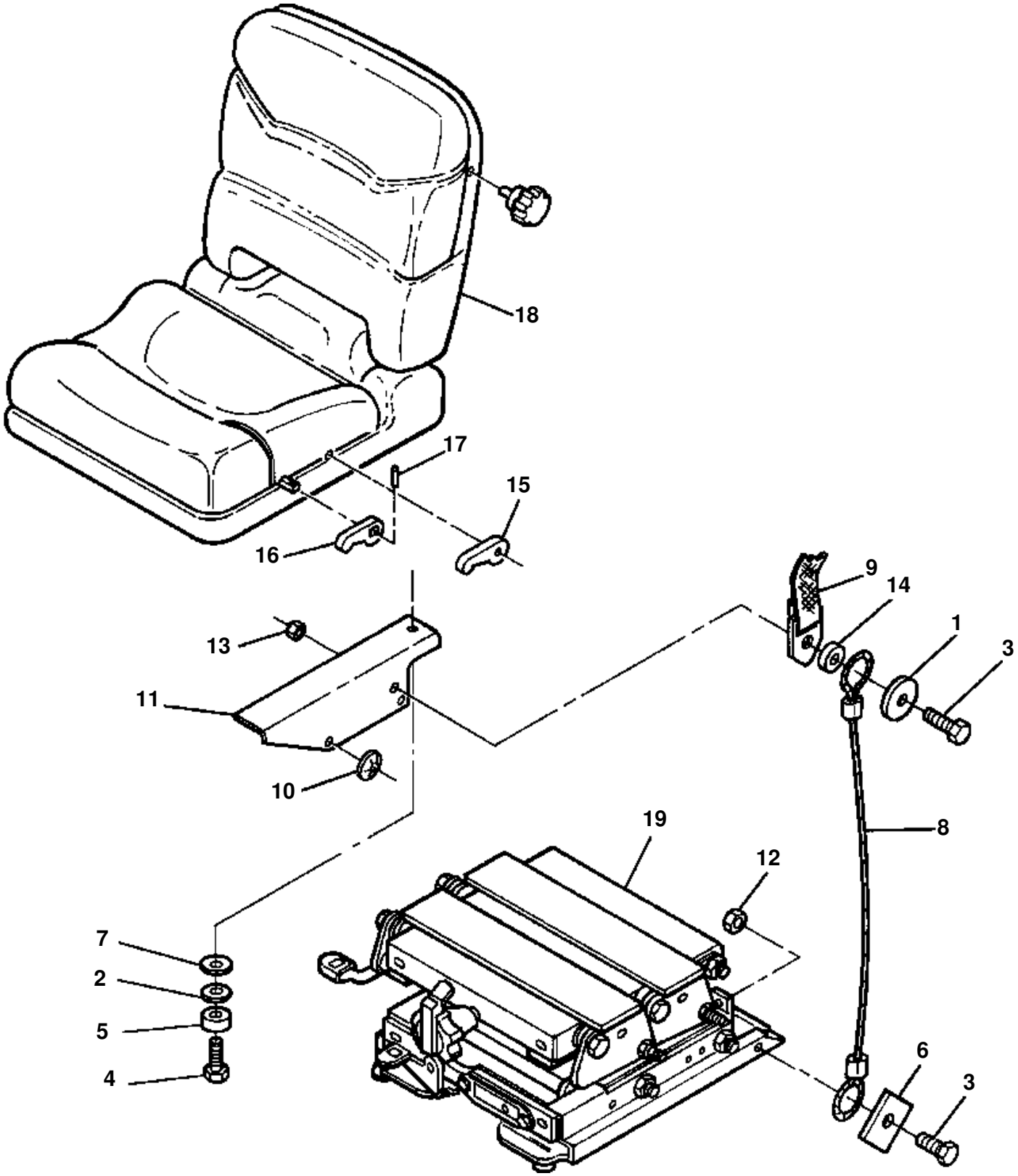

OPERATOR'S SEAT SEAR'S MFG. - S/N N/A AND UP

ITEM NO.	PART NO.	DESCRIPTION	Q'TY
	423-57-A1100	SEAT ASSEMBLY, OPERATOR'S	1
1	01640-21123	· WASHER	4
2	01643-31032	· WASHER	4
3	02010-20625	· BOLT	2
4	02011-20502	· BOLT	2
5	423-57-A1290	· SPACER	2
6	423-57-A1370	· WASHER, RECTANGULAR	4
7	423-57-A1380	· WASHER, RUBBER	6
8	423-57-A1390	· CABLE	2
9	423-57-A1410	· BELT, SEAT	1
10	423-57-A1420	· NUT, PUSH-ON	4
11	423-57-A1440	· BRACKET, L.H	1
	423-57-A1450	· BRACKET, R.H	1
12	423-57-A1460	· NUT, CENTERLOCK - 3/8 UNC	2
13	423-57-A1470	· NUT, CENTERLOCK - 7/16 UNC	2
14	423-57-A1480	· SPACER	2
15	423-57-A1510	· KNOB, BACK REST TILT	1
16	423-57-A1520	· KNOB, SEAT TILT	1
17	423-57-A1530	· PIN, SPIROL	1
18	423-57-A1110	· SEAT ASSEMBLY	1
	423-57-A1360	· · COVER, SEAT BACK CUSHION	1
	423-57-A1430	· · FASTENER, COVER	10
19		· SUSPENSION ASSEMBLY (SEE PG 09-008)	

FIG 13BHW320.003 OPERATOR'S SEAT SUSPENSION ASSEMBLY (SEAR'S MANUFACTURING)

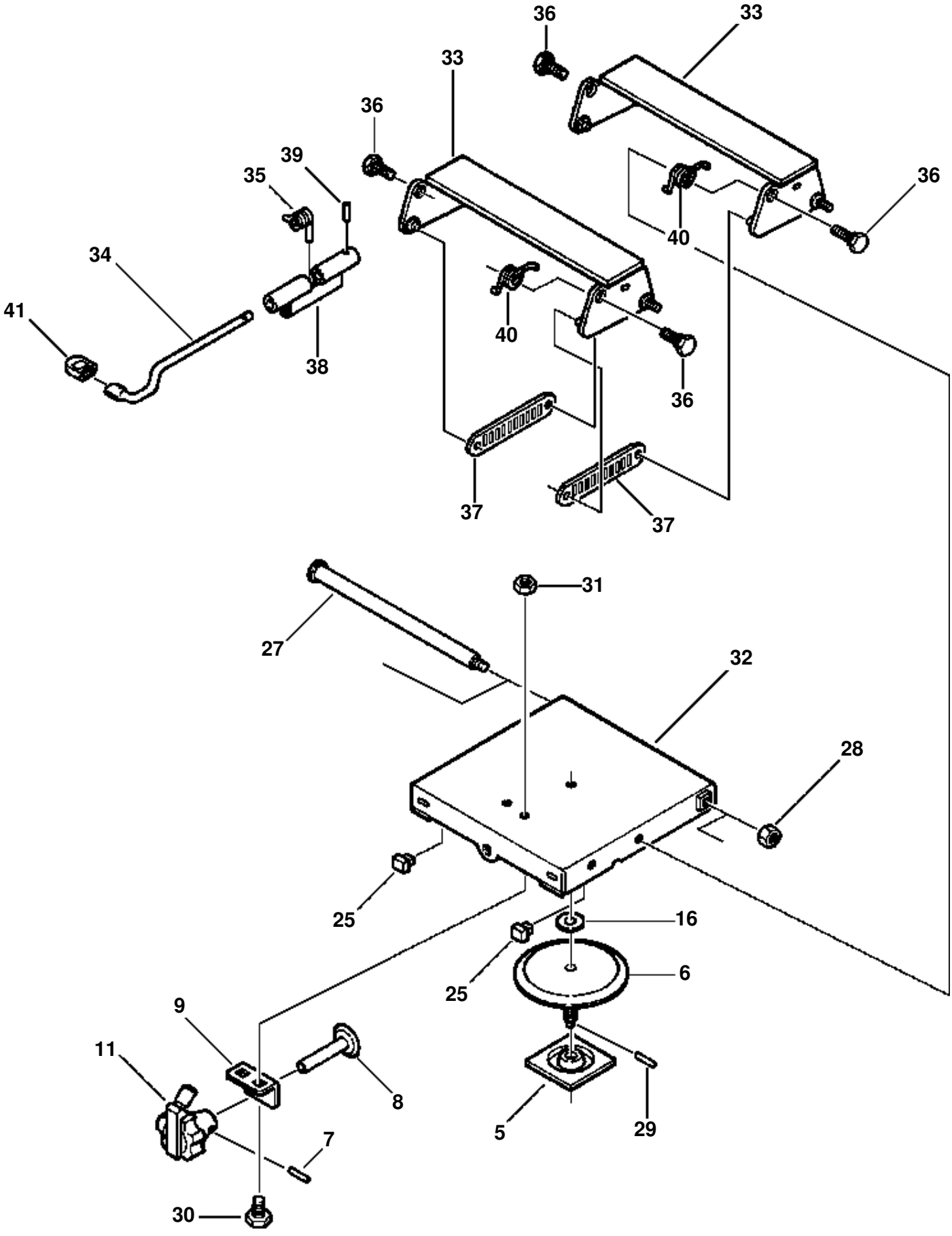

FIG 13BHW320.003 OPERATOR'S SEAT SUSPENSION ASSEMBLY (SEAR'S MANUFACTURING)

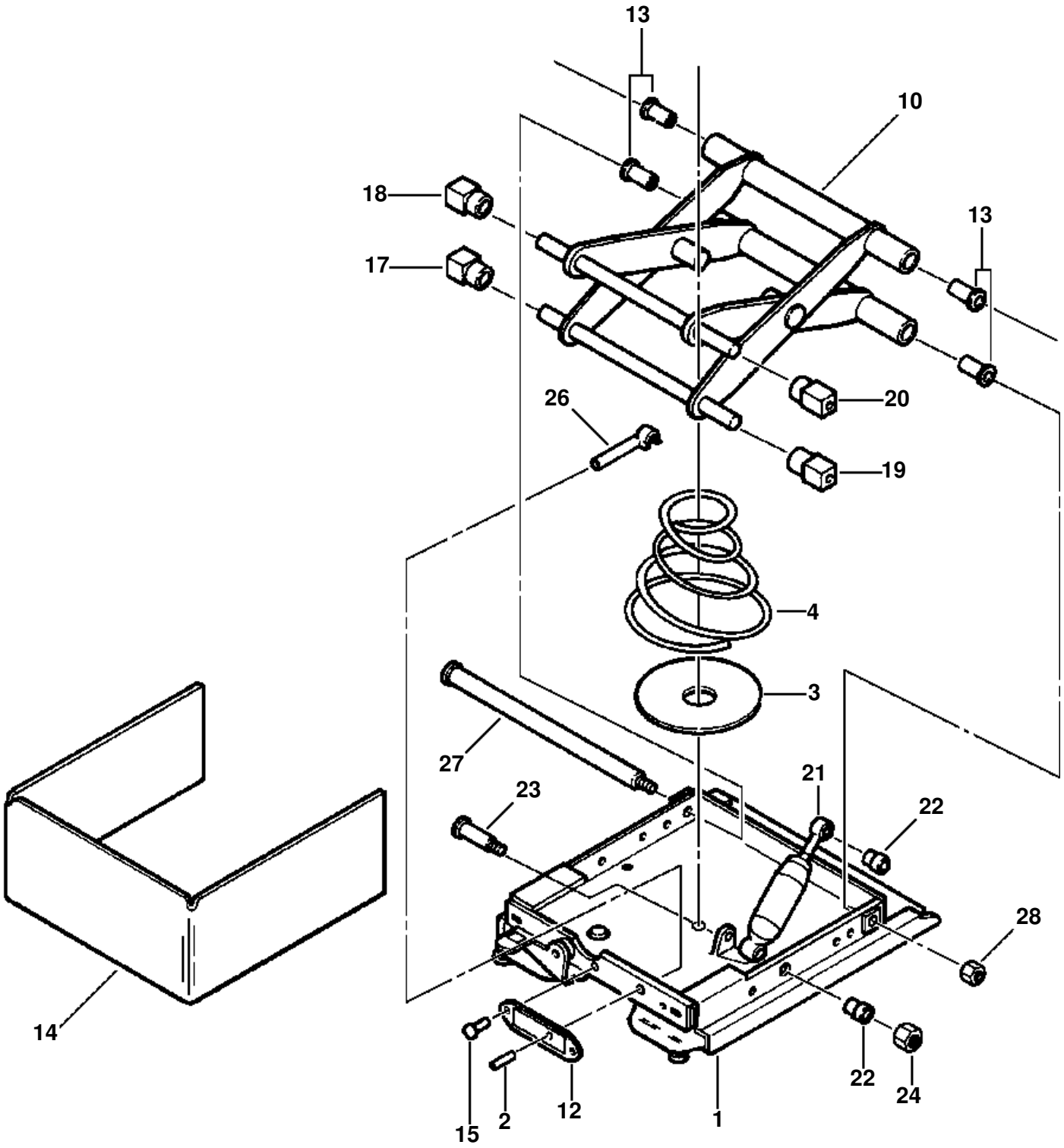

OPERATOR'S SEAT SUSPENSION ASSEMBLY (SEAR'S MANUFACTURING)

ITEM NO.	PART NO.	DESCRIPTION	Q'TY	REF
	423-57-A1120	SUSPENSION ASSEMBLY	1	
1	(NSS)	· ADJUSTER, SEAT	1	
2	(NSS)	· PIN, ROLL	1	
3	(NSS)	· PAD, SPRING	1	
4	423-57-A1210	· SPRING CONICAL	1	
5	(NSS)	· WASHER, SPRING	1	
6	(NSS)	· GEAR AND SHAFT, VERTICAL	1	
7	(NSS)	· PIN, ROLL	1	F5
8	(NSS)	· GEAR AND SHAFT, HORIZONTAL	1	
9	(NSS)	· BRACKET, SHAFT	1	
10	(NSS)	· ARM, SUSPENSION	1	
11	(NSS)	· KNOB, WEIGHT ADJUSTMENT	1	F5
12	(NSS)	· PRODUCT GRAPHIC, INSTRUCTION	1	
13	(NSS)	· BUSHING, TUBE	4	F1
14	(NSS)	· BOOT, SUSPENSION	1	F3
15	(NSS)	· FASTENER, PUSH ON	23	F3
16	(NSS)	· WASHER, THRUST	1	
17	(NSS)	· BUMPER, SLIDER	1	F1
18	(NSS)	· BUMPER, SLIDER	1	F1
19	(NSS)	· BUMPER, SLIDER	1	F1
20	(NSS)	· BUMPER, SLIDER	1	F1
21	(NSS)	· ABSORBER, SHOCK	1	F4
22	(NSS)	· BUSHING, SHOCK ABSORBER	2	F4
23	(NSS)	· BOLT, SHOULDER	1	
24	(NSS)	· NUT, LOCK	1	
25	(NSS)	· BUMPER, SLIDE	2	
26	(NSS)	· INDICATOR, RIDE	1	F1
27	(NSS)	· SHAFT, MOUNTING	2	
28	(NSS)	· NUT, LOCK	2	
29	(NSS)	· PIN, ROLL	1	
30	(NSS)	· BOLT, CARRIAGE	2	
31	(NSS)	· NUT, LOCK	2	
32	(NSS)	· HOUSING, UPPER	1	
33	(NSS)	· LINK	2	
34	(NSS)	· LEVER, HEIGHT ADJUSTMENT	1	
35	(NSS)	· SPRING	1	F2
36	(NSS)	· BOLT, 1/2NC X 1 - SHOULDER	4	
37	(NSS)	· LINK, CONNECTING	2	
38	(NSS)	· LATCH ASSEMBLY	1	
39	(NSS)	· PIN, COIL SPRING - 5/32 X 3/4	1	
40	(NSS)	· SPRING	2	F2
41	(NSS)	· CAP HEIGHT ADJUSTMENT	1	
	423-57-A1130	· BEARING KIT	1	
	423-57-A1220	· SPRING KIT	1	
	423-57-A1250	· BOOT KIT	1	
	423-57-A1270	· SHOCK KIT	1	
	423-57-A1310	· ADJUSTMENT KNOB KIT	1	
	423-57-A1330	· BEARING KIT	1	
		F1 - ORDER BEARING KIT 423-57-A1130		
		F2 - ORDER SPRING KIT 423-57-A1220		
		F3 - ORDER BOOT KIT 423-57-A1250		
		F4 - ORDER SHOCK KIT 423-57-A1270		
		F5 - ORDER ADJ. KNOB KIT 423-57-A1310		
		F6 - ORDER BEARING KIT 423-57-A1330		

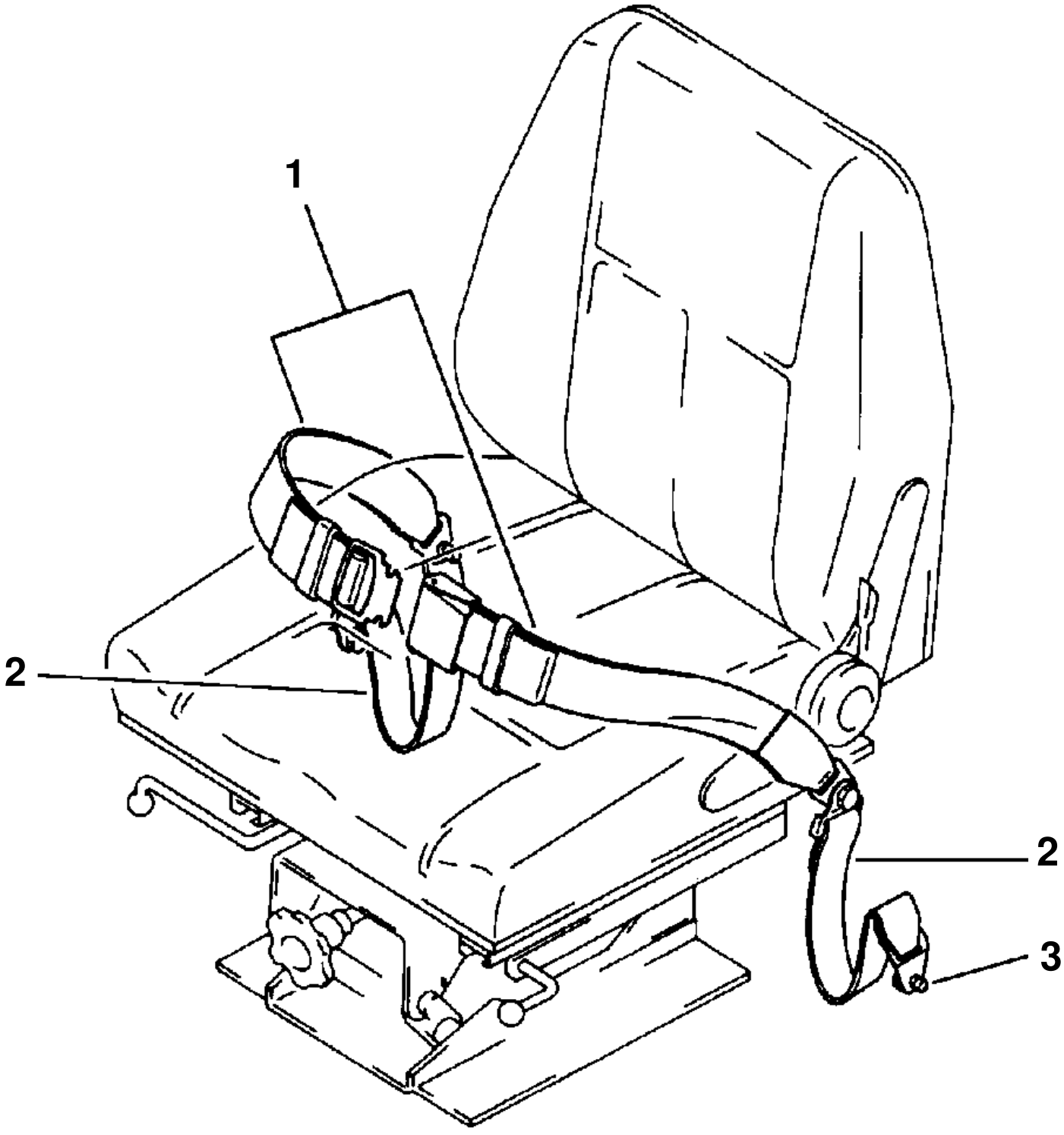
1
2
2
3

SEAT BELT

ITEM NO.	PART NO.	DESCRIPTION	Q'TY
	423-962-1000	SEAT BELT ASSEMBLY	1
1	09409-10001	· BELT, LAP	1
2	09409-20000	· BELT, TETHER	2
3	02030-70719	· BOLT	2

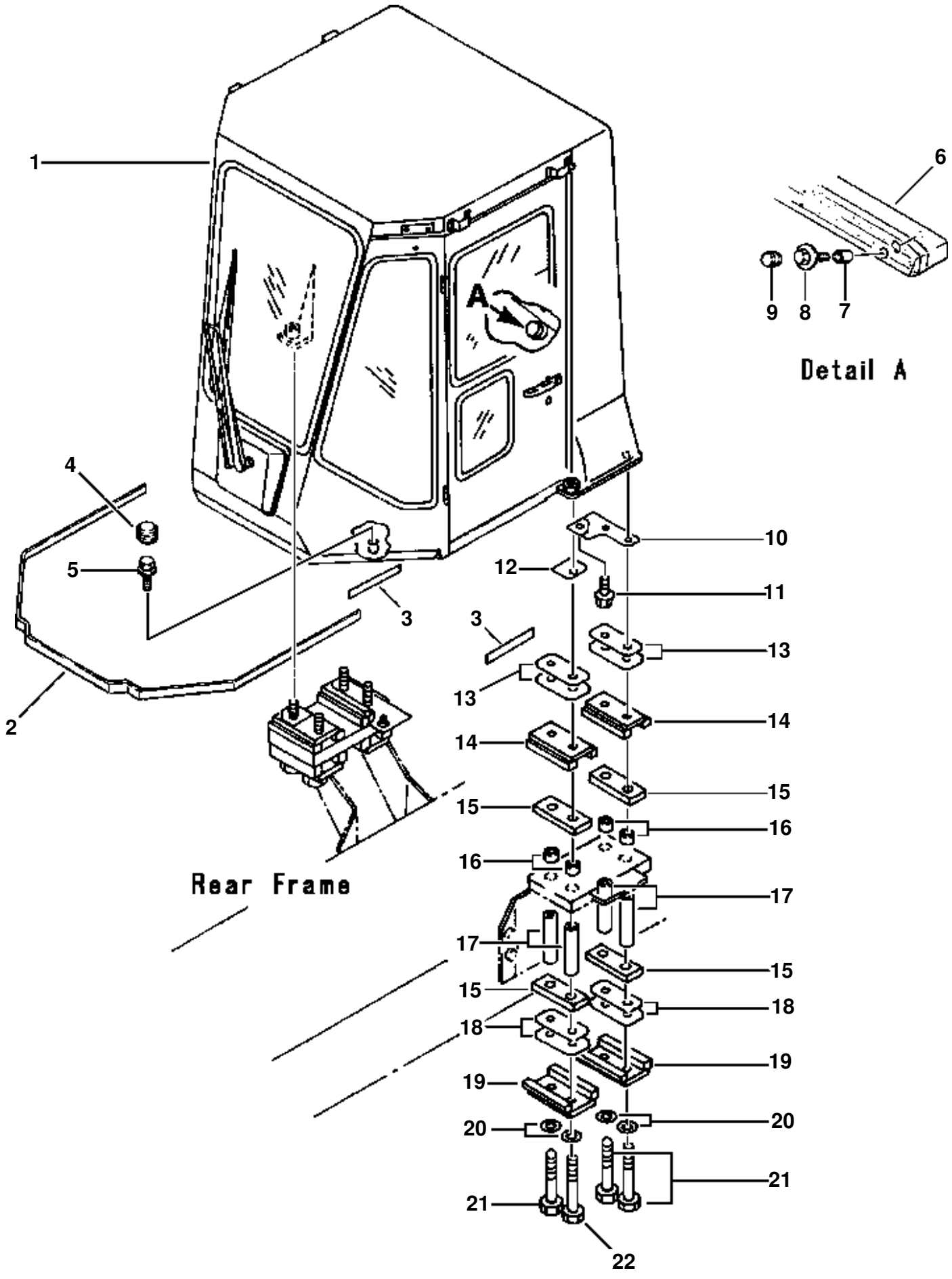
1
2
3
3
4
5
6
7
8
9
10
11
12
13
13
14
14
15
15
15
16
16
17
17
18
18
19
19
20
20
21
21
22
A
Detail A
Rear Frame

ROPS CAB MOUNTING PARTS

ITEM NO.	PART NO.	DESCRIPTION	Q'TY
1	419-926-1070	CAB ASSEMBLY, ROPS	1
2	419-926-1380	· SEAL	2
3	419-928-1210	· PLATE, LH	1
	419-928-1220	· PLATE, RH	1
4	419-928-1120	· PLATE	2
5	419-928-1180	· SHIM, 0.5mm	26
6	419-928-1160	· BRACKET	4
7	419-928-1171	· CUSHION	8
8	419-928-1130	· CUSHION	8
9	419-928-1190	· SHIM, 0.5mm	28
10	419-928-1140	· SPACER	8
11	419-928-1150	· BRACKET	4
12	01011-52480	· BOLT	6
13	01011-52460	· BOLT	2
14	01643-32460	· WASHER	8
15	01435-01225	· BOLT	2
16	419-54-15650	· SEAL	1
17	01435-01230	· BOLT	8
18	01435-01250	· BOLT	3
19	419-54-13440	· SPACER	3
20	419-54-13450	· SHEET	1
21	09415-02512	· GROMMET	8
22	09415-03614	· CAP	3

FIG 13CMW320.001 ROPS CAB (FRONT WINDSHIELD AND WIPER)

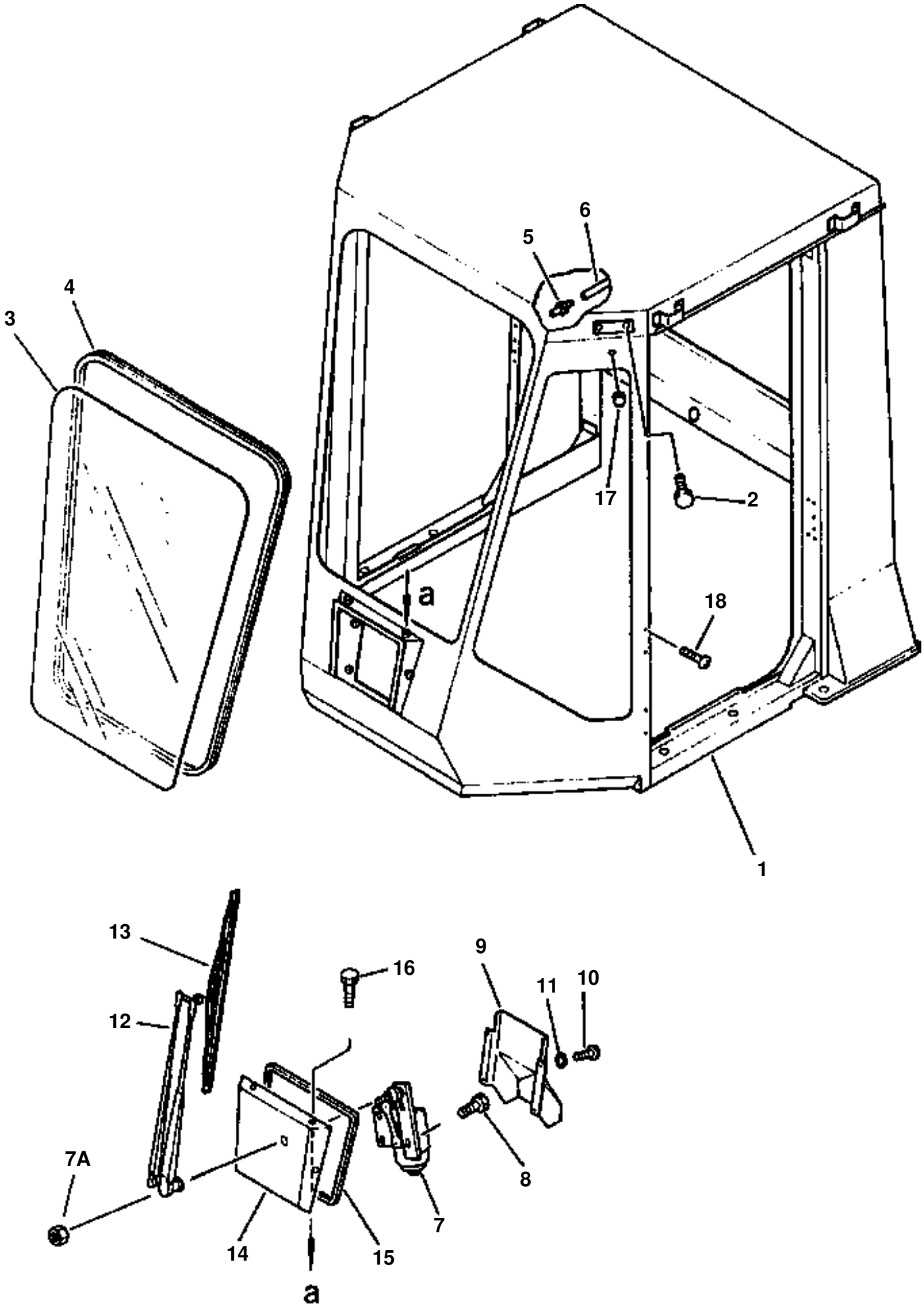

ROPS CAB (FRONT WINDSHIELD AND WIPER)

ITEM NO.	PART NO.	DESCRIPTION	Q'TY
		CAB ASSEMBLY, ROPS (SEE PG 05-046)	
1	(NSS)	· CAB	1
2	01010-51220	· BOLT	4
3	419-926-1650	· GLASS, WINDSHIELD	1
4	419-54-15280	· STRIP, WEATHER	1
	419-54-15720	· STRIP, WEATHER	1
5	421-54-15430	· NOZZLE, WINDSHIELD WASHER	1
6	421-54-15440	· HOSE, WINDSHIELD WASHER	2
7	419-54-15881	· MOTOR, WINDSHIELD WIPER	1
7A	01582-11008	· NUT	1
8	01435-00616	· BOLT, FLANGED	4
9	419-923-1910	· COVER, WIPER MOTOR	1
10	01220-40512	· SCREW	4
11	01642-20508	· WASHER	4
12	426-54-15233	· ARM, WINDSHIELD WIPER	1
13	425-54-15250	· BLADE, WINDSHIELD WIPER	1
14	419-925-1260	· COVER	1
15	419-54-15830	· SEAL	1
16	01435-00610	· BOLT	6
17	09415-01008	· GROMMET	2
18	01220-40810	· SCREW	8

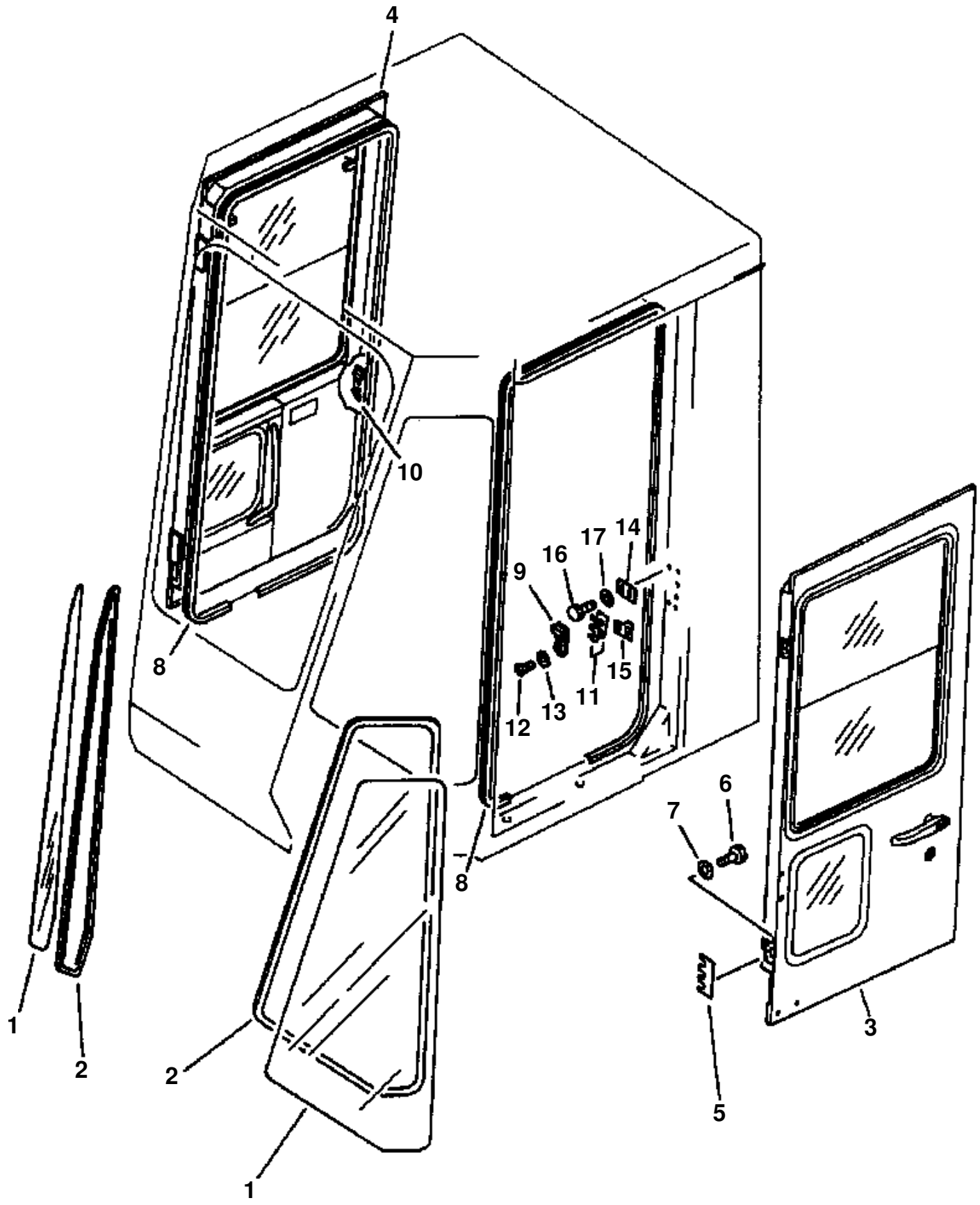
4
10
8
9
16
17
14
15
11
12
13
8
6
7
5
3
1
2
2
1

ROPS CAB (FRONT WINDOWS AND DOORS)

ITEM NO.	PART NO.	DESCRIPTION	Q'TY
		CAB ASSEMBLY, ROPS (SEE PG 05-046)	
1	419-54-15641	· GLASS, FRONT SIDE	2
2	419-54-15221	· STRIP, WEATHER	2
	419-54-15940	· STRIP, WEATHER	2
3		· DOOR ASSEMBLY, LH (SEE PG 05-058)	
4		· DOOR ASSEMBLY, RH (SEE PG 05-058)	
5	423-54-15750	· SHIM (0.5mm)	16
6	01010-50820	· BOLT	12
7	01643-30823	· WASHER	12
8	421-54-15730	· SEAL, DOOR	2
9	421-54-15740	· STRIKER, LH DOOR	1
10	421-54-15750	· STRIKER, RH DOOR	1
11	419-54-15690	· PLATE	4
12	01224-40820	· SCREW	4
13	421-54-15760	· WASHER	4
14	425-54-15680	· PLATE	2
15	425-54-15690	· PLATE	2
16	01435-00816	· BOLT	8
17		· NOT USED	

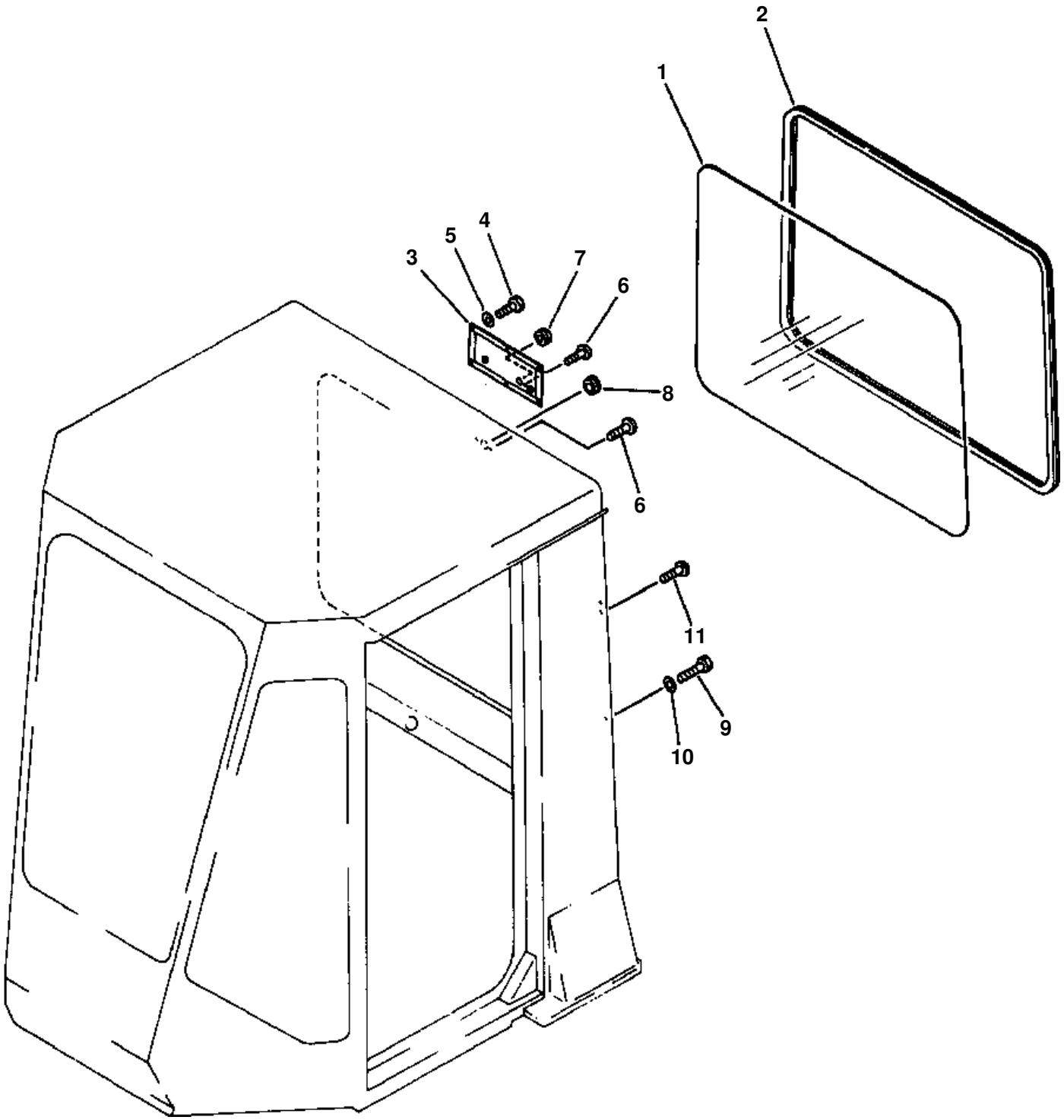
1
2
3
4
5
6
7
8
6
11
9
10

ROPS CAB (REAR CAB WINDOW)

ITEM NO.	PART NO.	DESCRIPTION	Q'TY
		ROPS CAB ASSEMBLY (SEE PG 05-046)	
1	419-54-15511	・ GLASS, REAR WINDOW	1
2	425-54-15361	・ STRIP, WEATHER	1
	419-54-15950	・ STRIP, WEATHER	1
3	419-926-1210	・ COVER	1
	419-926-1230	・・ SEAL	2
	419-926-1240	・・ SEAL	2
4	01435-00616	・ BOLT	6
5		・ NOT USED	
6	01220-40508	・ SCREW	3
7	09415-01008	・ GRAMMET	1
8	09415-01610	・ CAP	1
9	01435-01220	・ BOLT	5
10		・ NOT USED	
11	01220-40406	・ SCREW	3

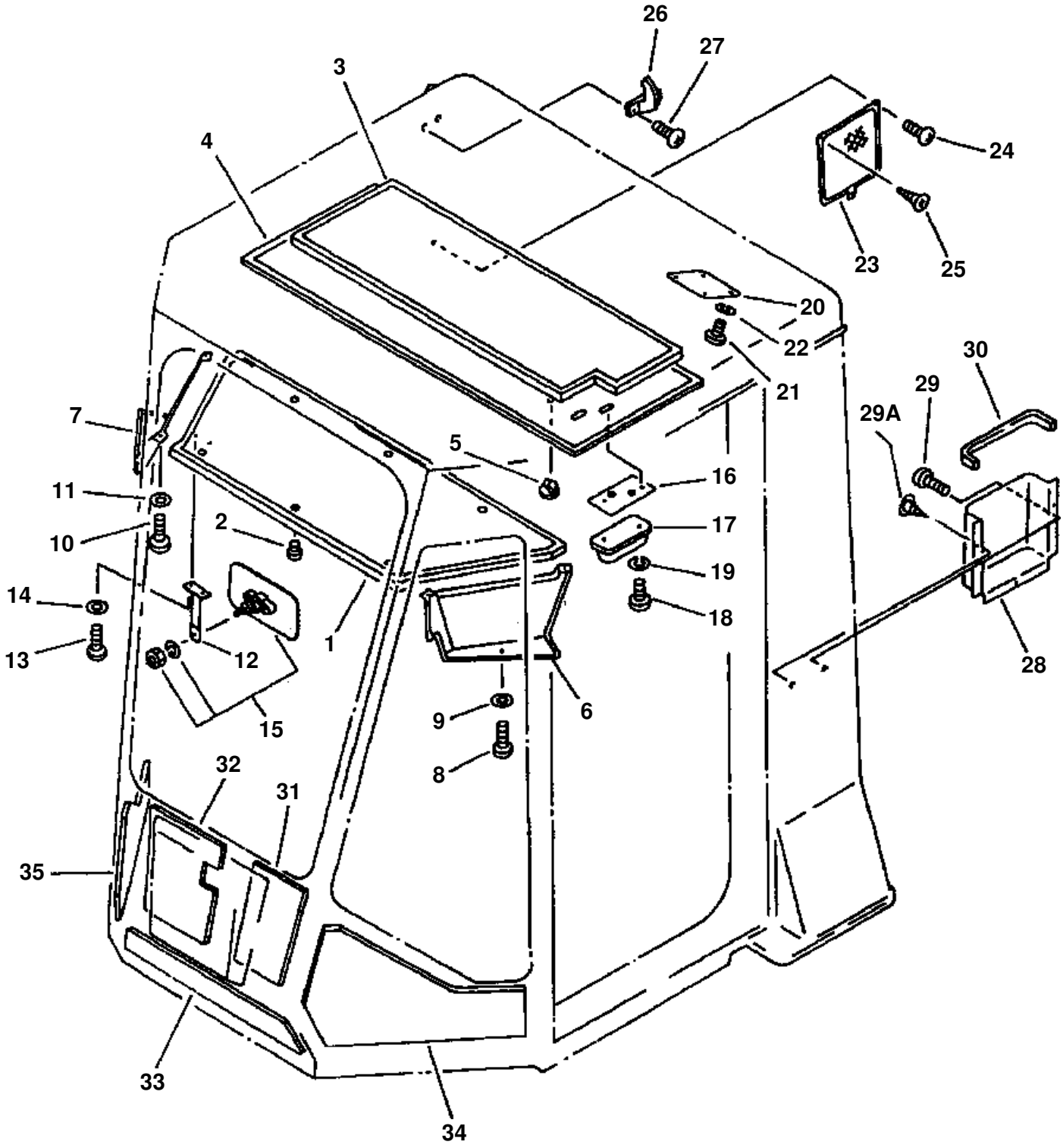
26
27
3
4
24
23
25
20
22
21
30
29
29A
7
5
16
11
17
2
10
19
14
18
13
12
1
28
6
9
15
8
32
31
35
33
34

ROPS CAB (INTERIOR TRIM)

ITEM NO.	PART NO.	DESCRIPTION	Q'TY
		ROPS CAB ASSEMBLY (SEE PG 05-046)	
1	419-926-1251	· PAD	1
2	09416-10000	· BUTTON	6
3	419-926-1260	· INSULATOR	1
4	419-926-1360	· PAD	1
5	419-926-1710	· BUTTON	6
6	419-926-1311	· COVER, LH	1
7	419-926-1330	· COVER, RH	1
8	01225-40512	· SCREW	2
9	421-54-15790	· WASHER	2
10	01220-41512	· SCREW	4
11	01642-20508	· WASHER	4
12	419-56-11271	· STAY, REAR VIEW MIRROR MOUNTING	1
13	01225-40516	· SCREW	2
14	421-54-15790	· WASHER	2
15	419-56-11260	· MIRROR, REAR VIEW (INSIDE)	1
16	425-54-15590	· PLATE	1
17	08141-12400	· LIGHT, DOME	1
	08116-02410	· · BULB, 10W	1
18	02220-40416	· SCREW	2
19	01601-20410	· WASHER, SPRING	2
20	417-54-15270	· PLATE	1
21	01220-40512	· SCREW	4
22	01641-20508	· WASHER, SPRING	4
23	419-54-15522	· POCKET	1
24	01220-40416	· SCREW	2
25	01370-00410	· SCREW	1
26	205-54-51250	· HANGER	1
27	01224-40416	· SCREW	2
28	421-56-11342	· BOX	1
29	01220-40416	· SCREW	2
29A	01370-00410	· SCREW	1
30	421-56-11820	· FINISHER	1
31	419-54-15572	· PAD, LH	1
32	419-54-15582	· PAD, RH	1
33	419-54-15592	· PAD	1
34	419-54-15621	· PAD, LH	1
35	419-54-15631	· PAD, RH	1

FIG 13CMW320.003 ROPS CAB (LEFT AND RIGHT HAND DOORS)

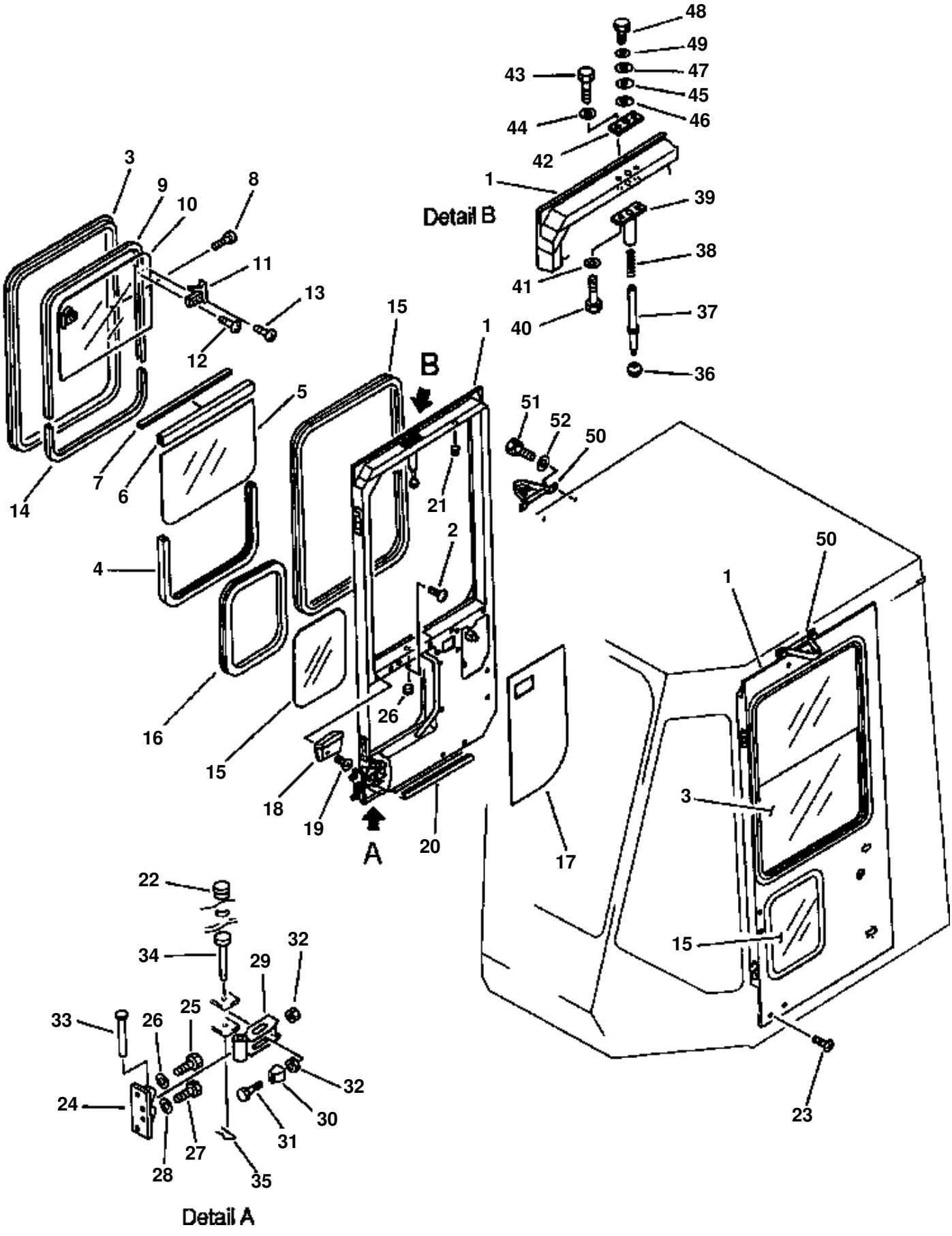

ROPS CAB (LEFT AND RIGHT HAND DOORS)

ITEM NO.	PART NO.	DESCRIPTION	Q'TY	REF
	419-56-11153	DOOR ASSEMBLY, LH	1	F1
	419-56-11163	DOOR ASSEMBLY, RH	1	F1
1	(NSS)	· DOOR	1	
2	419-54-16720	· SCREW	2	
3	419-54-16692	· SASH ASSEMBLY	1	
4	425-54-16540	· · STRIP, WEATHER	1	
5	419-54-16420	· · GLASS	1	
6	419-54-16430	· · FRAME, CENTER	1	
7	425-54-16550	· · STRIP, WEATHER	1	
8	425-54-16570	· · SCREW	2	
9	425-54-16530	· · STRIP, WEATHER	1	
10	419-54-16410	· · GLASS	1	
11	425-54-16250	· · LOCK ASSEMBLY, LH	1	
	425-54-16260	· · LOCK ASSEMBLY, RH	1	
12	425-54-16270	· · · SCREW	2	
13	425-54-16280	· · · SCREW	4	
14	425-54-16520	· · RUBBER	1	
14A	425-54-16390	· STRIP, WEATHER	1	
15	419-54-16631	· GLASS	1	
16	425-54-16470	· STRIP, WEATHER	1	
17	418-56-11622	· PAD, LH	1	
	419-54-16730	· · CLIP, TRIM	6	
17	418-56-11632	· PAD, RH	1	
	419-54-16730	· · CLIP, TRIM	7	
18	425-54-17410	· ASHTRAY (FOR RH DOOR)	1	
19	01224-40412	· SCREW, ASHTRAY MOUNTING	2	
20	419-54-16350	· SEAL, DOOR	1	
21	09415-00506	· CAP	2	
22	09415-01008	· GROMMET	1	
23	01220-40810	· SCREW (FOR SHIPPING)	6	
24	419-54-17380	· BRACKET	1	
25	01435-00820	· BOLT	2	
26		· NOT USED		
27	01435-00620	· BOLT	2	
28		· NOT USED		
29	417-54-17121	· LEVER	1	
30	419-56-11170	· SPRING	1	
31	01016-20415	· SCREW	2	
32	01580-10403	· NUT	4	
33	419-54-17360	· PIN	1	
34	419-54-17350	· PIN	1	
35	04052-01038	· PIN, SNAP	1	
36	09304-00835	· KNOB	1	
37	419-925-1151	· ROD	1	
38	709-12-11530	· SPRING	1	
39	419-925-1161	· SUPPORT	1	
40	01435-00816	· BOLT	2	
41		· NOT USED		
42	419-925-1170	· PLATE	1	
43	01435-00816	· BOLT	2	
44		· NOT USED		
45	419-925-1191	· SEAL	1	
46	419-925-1290	· SEAL	1	
47	419-925-1180	· PLATE	1	
48	01435-00612	· BOLT	1	
49		· NOT USED		
50	419-56-11140	· PLATE, LH	1	
	419-925-1140	· PLATE, RH	1	
51	01435-01020	· BOLT	4	
52		· NOT USED		
N/I	01220-70412	· SCREW	2	
	419-54-16350	· DOOR SEAL	2	
		F1 - FOR MOUNTING SEE PG 05-051.		

FIG 13CMW320.004 ROPS CAB (DOOR HANDLES AND LOCKS)

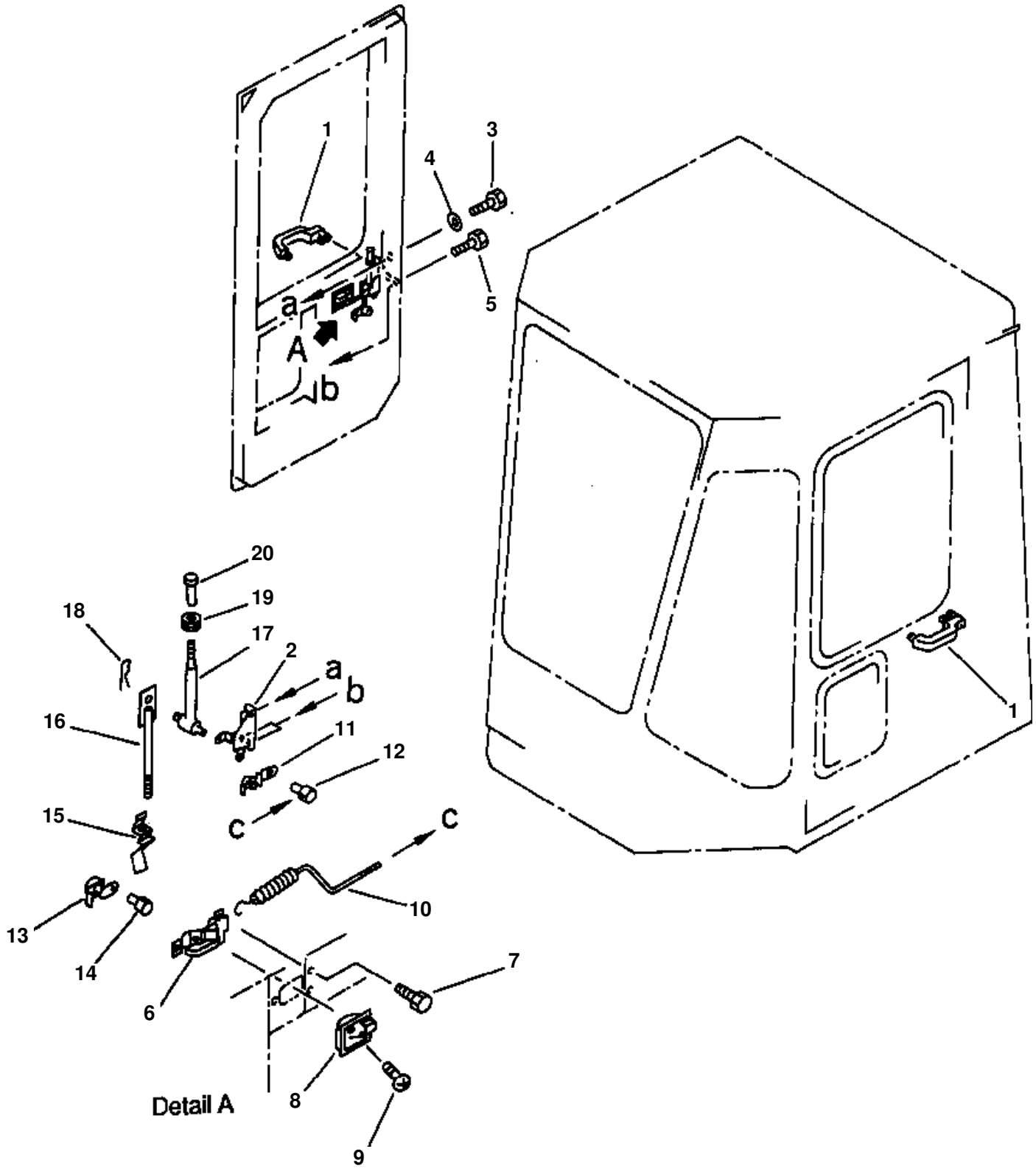

ROPS CAB (DOOR HANDLES AND LOCKS)

ITEM NO.	PART NO.	DESCRIPTION	Q'TY
		DOOR ASSEMBLY, LH (SEE PG 05-058)	
		DOOR ASSEMBLY, RH (SEE PG 05-058)	
1	427-56-11810	· HANDLE, OUTER	1
2	427-56-11820	· LOCK, LH	1
	419-56-17410	· LOCK, RH	1
3	01224-40616	· SCREW	1
4	421-54-16440	· WASHER	1
5	01435-00612	· BOLT	2
6	425-54-16420	· HANDLE, LH	1
	425-54-17420	· HANDLE, RH	1
7	01435-00612	· BOLT	3
8	425-54-16430	· COVER, LH	1
	425-54-17430	· COVER, RH	1
9	01225-70512	· SCREW	1
10	418-56-11610	· ROD	1
11	425-54-16450	· SPRING	1
12	425-54-16460	· PIN	1
13	427-56-11790	· LOCK ASSEMBLY	1
14	421-54-16370	· PIN	1
15	421-54-16350	· SPRING	1
16	427-56-11780	· ROD	1
17	427-56-11770	· ROD	1
18	04052-00530	· PIN, SNAP	1
19	08037-01008	· GROMMET	1
20	419-54-16880	· KNOB, DOOR LOCK	1

FIG 08ADW320.007 ELECTRICAL SYSTEM (ROPS CAB)

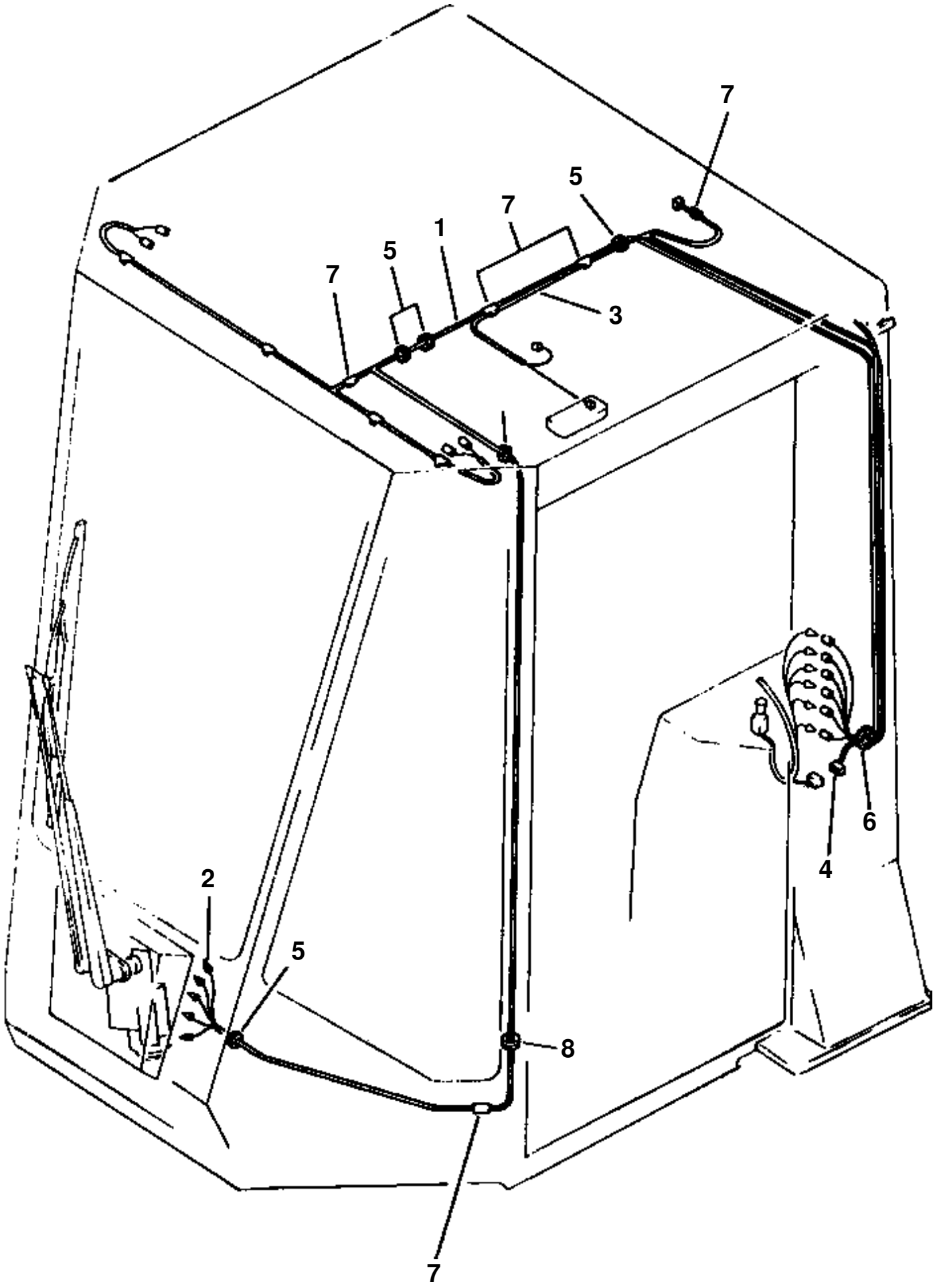

ELECTRICAL SYSTEM (ROPS CAB)

ITEM NO.	PART NO.	DESCRIPTION	Q'TY
		CAB ASSEMBLY, ROPS (SEE PG 05-046)	
1	419-926-1430	・WIRE ASSEMBLY, FRONT	1
N/I	08027-01000	・・TERMINAL	4
	08022-04001	・・CONNECTOR	1
	08021-00400	・・CONNECTOR	1
	08027-12000	・・TERMINAL	4
2	08027-00410	・CONNECTOR	1
N/I	08022-04001	・・CONNECTOR	2
	08027-01000	・・TERMINAL	6
	08027-02420	・・CONNECTOR	1
3	421-56-11231	・WIRE ASSEMBLY, REAR	1
4	08027-00610	・CONNECTOR	1
5	08037-01610	・GROMMET	5
6	08037-03614	・GROMMET	1
7	421-54-15520	・CLIP	15
8	08037-01008	・GROMMET	1
N/I	08027-00410	・CONNECTOR	1
	08037-03620	・GROMMET	1

FIG 13BRW320.001 **ROPS CANOPY MOUNTING & RAILS**

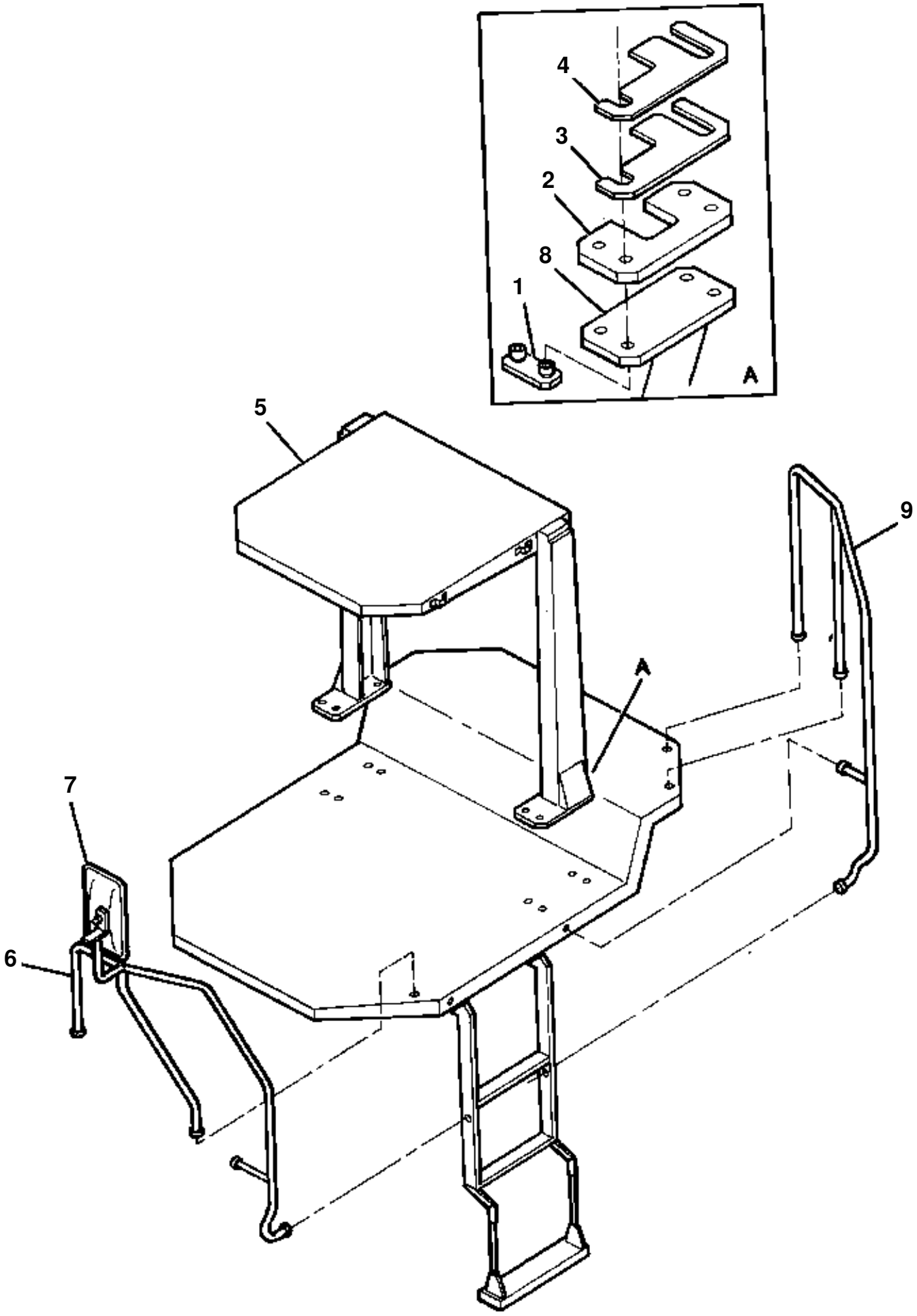

ROPS CANOPY MOUNTING & RAILS

ITEM NO.	PART NO.	DESCRIPTION	Q'TY
		ROPS CANOPY ASSEMBLY	1
N/I	01011-32445	· BOLT	8
	01643-32460	· WASHER	8
1	419-54-19760	· PLATE	4
2	419-54-19730	· PLATE	2
3	419-54-19740	· PLATE	2
4	419-54-19750	· SHIM	A/R
N/I	09415-03614	· CAP	3
5	419-54-19721	· ROPS CANOPY	1
6	418-54-16321	HAND RAIL (LH)	1
	418-54-16311	HAND RAIL (RH)	1
N/I	01010-51230	· BOLT	2
	01010-51225	· BOLT	2
	01010-51250	· BOLT	2
	01643-31232	· WASHER	6
7	08174-13116	· MIRROR	2
8	(NSS)	ROPS SUPPORT FRAME	1
9		RAIL LH (ENTRY) (SEE PG 05-070)	
		RAIL RH (ENTRY) (SEE PG 05-070)	

FIG 13DVW320.001 ROPS CAB WINDSHIELD WASHER TANK - S/N A65281 AND UP

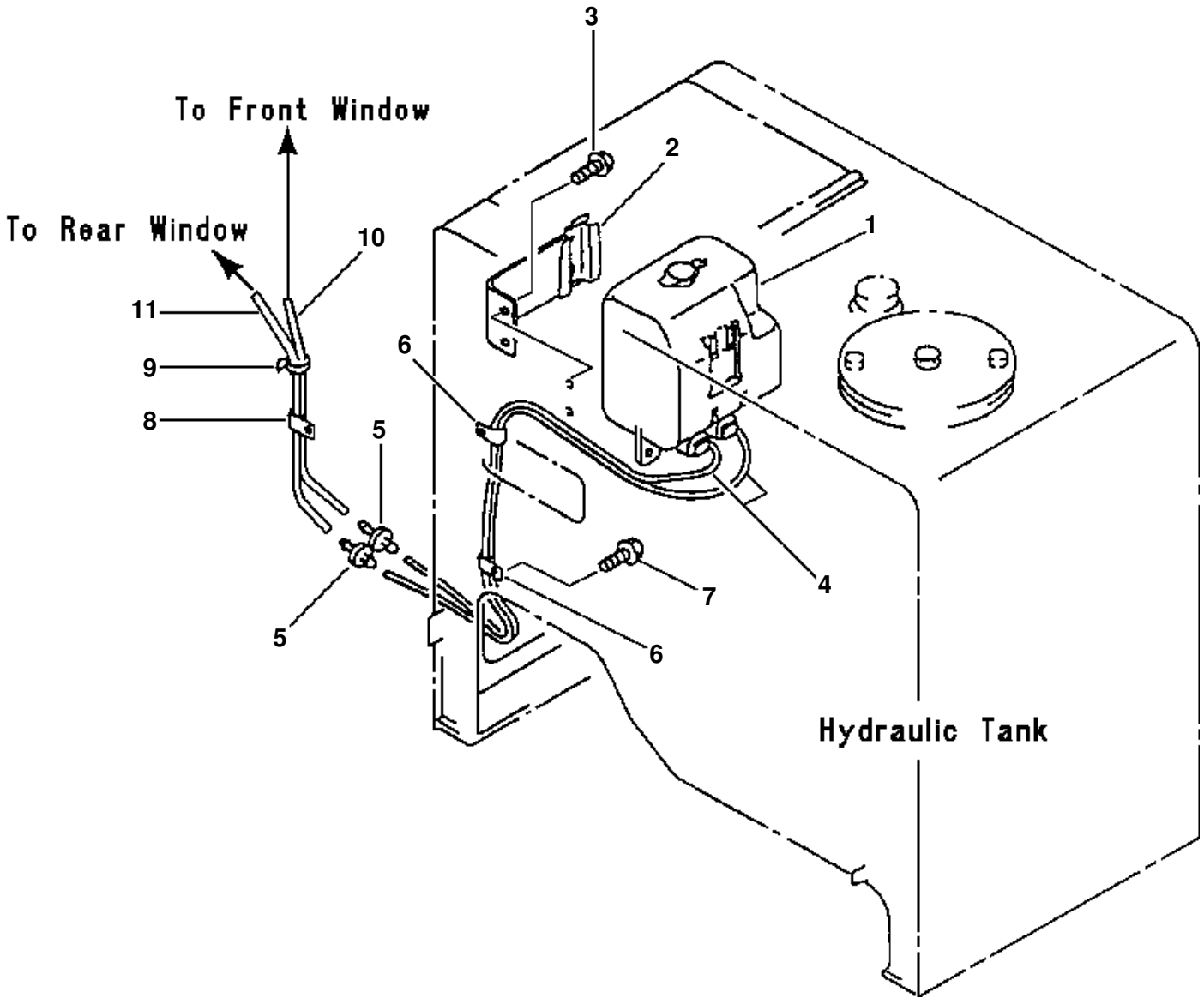

ROPS CAB WINDSHIELD WASHER TANK - S/N A65281 AND UP

ITEM NO.	PART NO.	DESCRIPTION	Q'TY
1	419-926-A180	TANK ASSEMBLY, WASHER	1
	419-926-A280	・ TANK, WINDSHIELD WASHER	1
	(NSS)	・・ TANK	1
	423-947-1120	・・ CAP, WASHER TANK	1
	(NSS)	・・ PUMP	2
2	419-07-A1101	BRACKET, MOUNT WASHER TANK	1
3	01010-50616	BOLT, MOUNT WASHER TANK TO BRACKET	4
	01641-20608	WASHER	4
	01010-51016	BOLT, MOUNT BRACKET TO BULKHEAD	2
	01641-21016	WASHER	2
4	419-07-16130	HOSE	2
5	421-07-15110	JOINT	2
6	08036-01814	CLIP	2
7	01435-01016	BOLT	2
8	08036-11214	CLIP	1
9	08034-00310	STRAP, TIE	1
10	418-927-AL80	HOSE, TO FRONT WINDOW	1
11	417-927-AJ70	HOSE, TO REAR WINDOW	1
		NOTE: USED ON MACHINES S/N 25165 - 25180, S/N 251 AND UP (WA320). USED ON MACHINES S/N 2046 AND UP (532).	82

FIG 13FRW320.001 MIRRORS AND MOUNTING (WITH HAND RAIL)

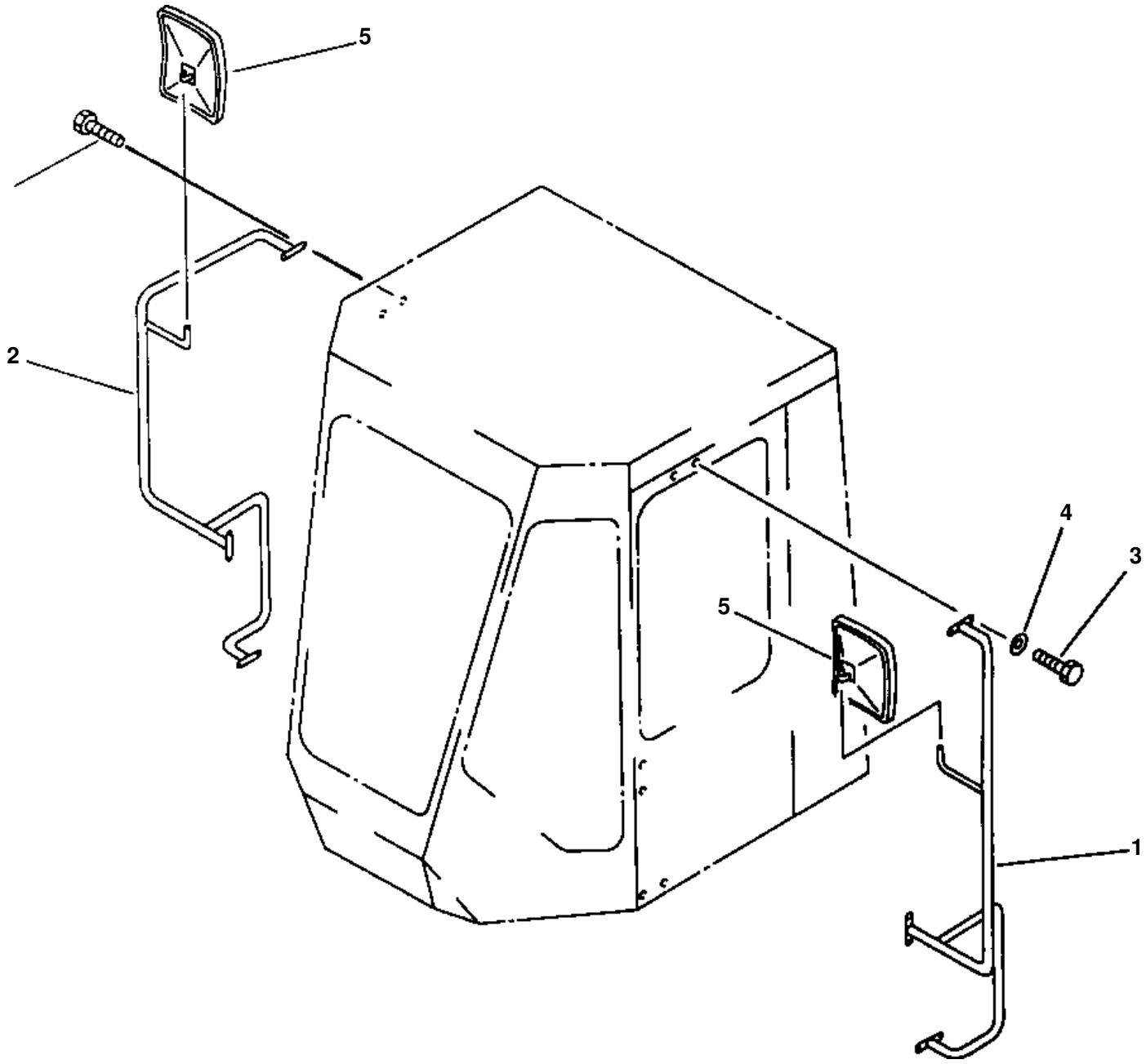

MIRRORS AND MOUNTING (WITH HAND RAIL)

ITEM NO.	PART NO.	DESCRIPTION	Q'TY
1	419-54-12216	STAY, L.H	1
2	419-54-12225	STAY, R.H	1
3	01435-00820	BOLT	12
4	08174-33124	MIRROR, REAR VIEW	2
5	01602-20619	WASHER, SPRING	1

FIG 13EHW420.001 AIR CONDITIONER (COMPRESSOR MOUNTING)

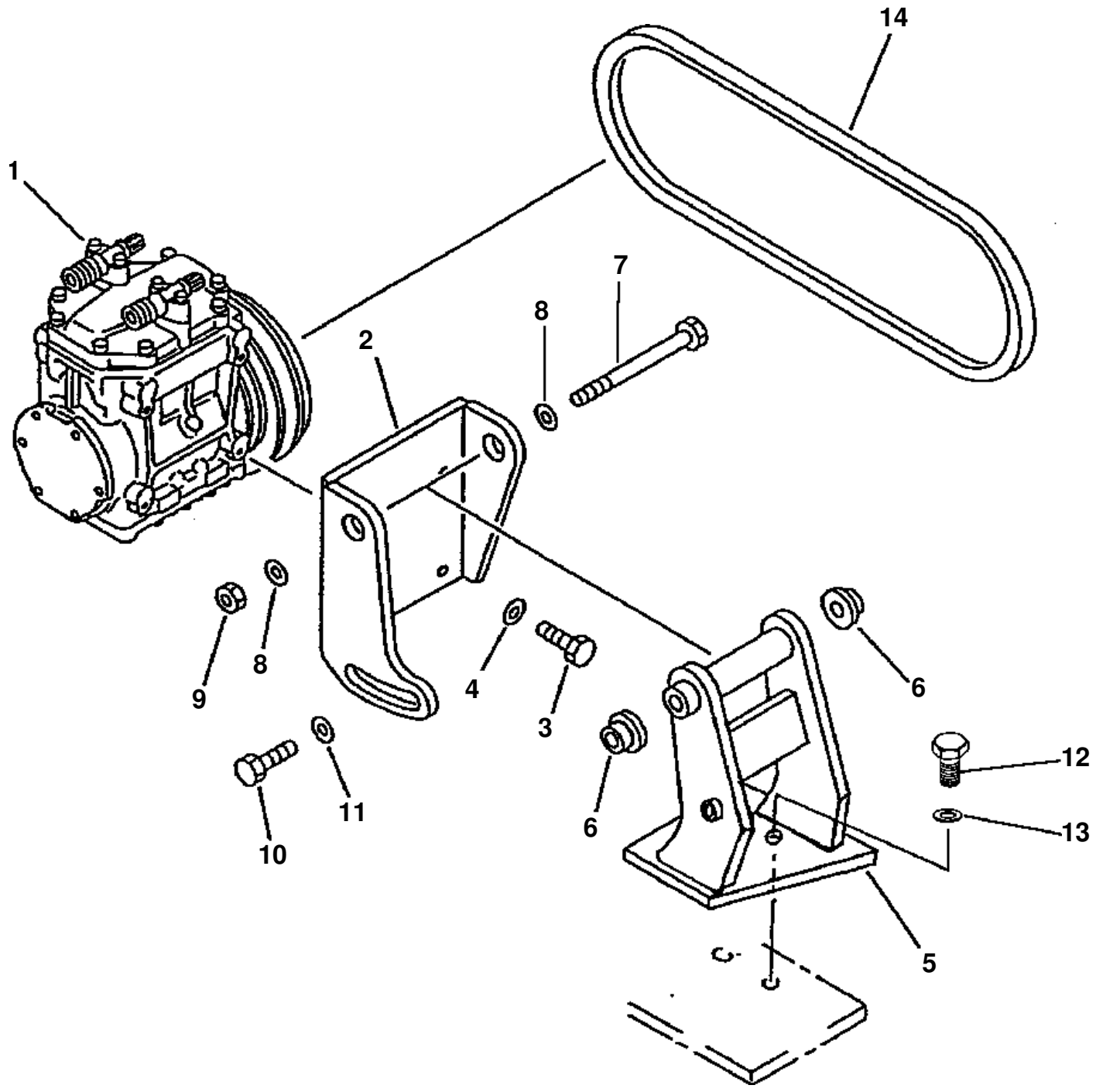

AIR CONDITIONER (COMPRESSOR MOUNTING)

ITEM NO.	PART NO.	DESCRIPTION	Q'TY
1		COMPRESSOR ASSEMBLY (SEE PG 05-092)	
2	418-963-1140	BRACKET	1
3	01010-50820	BOLT	4
4	01643-30823	WASHER	4
5	423-963-1610	BRACKET	1
6	419-07-11760	COLLAR	1
7	01011-51275	BOLT	1
8	01643-31232	WASHER	2
9	01580-11210	NUT	1
10	01010-51225	BOLT	1
11	01643-31232	WASHER	1
12	01010-51035	BOLT	2
13	01643-31032	WASHER	2
14	04120-43114	V-BELT	1

FIG 13FDW320.002 AIR CONDITIONER OR HEATER AND DEFROSTER (MOUNTING PARTS)

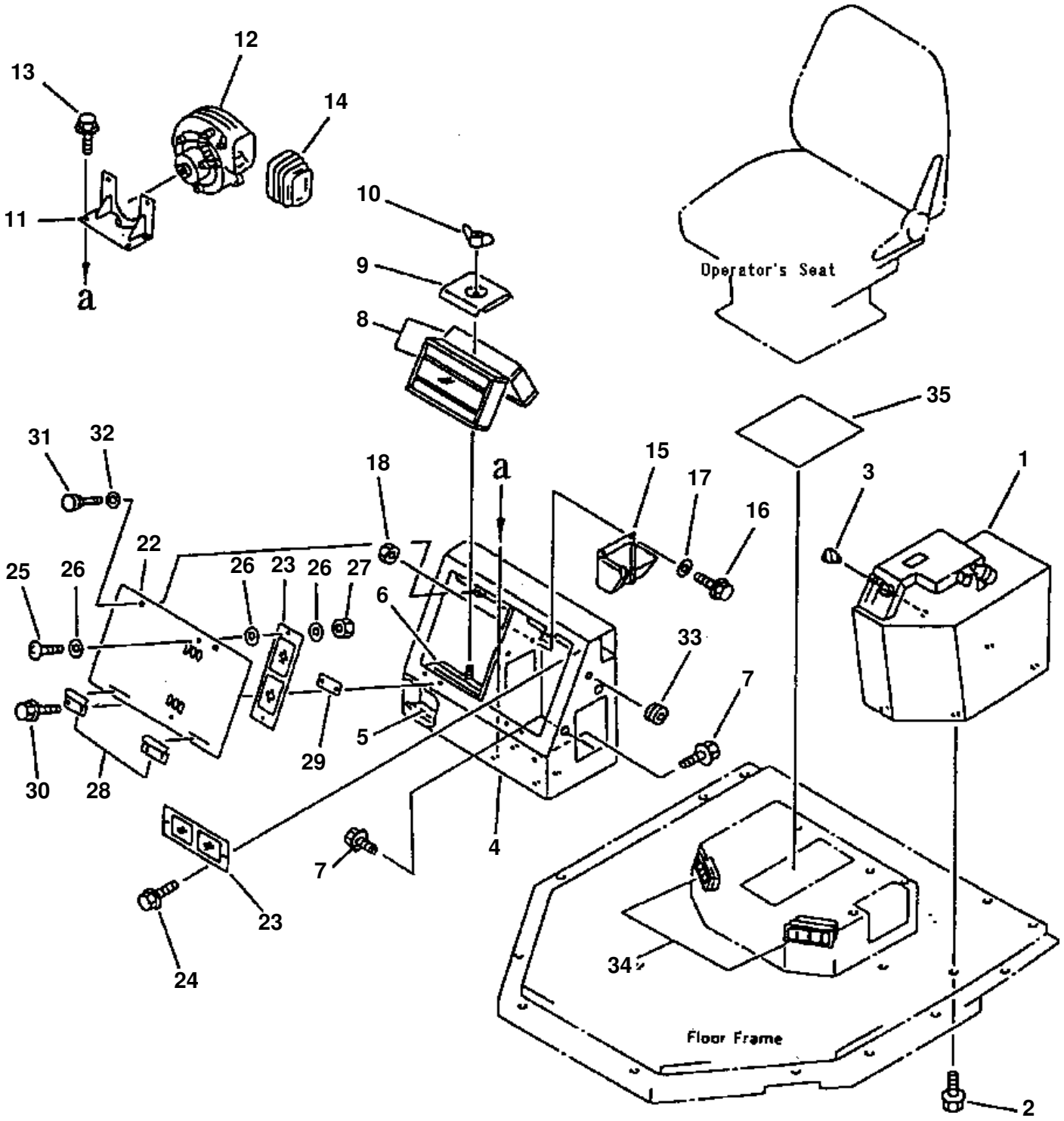

AIR CONDITIONER OR HEATER AND DEFROSTER (MOUNTING PARTS)

ITEM NO.	PART NO.	DESCRIPTION	Q'TY
1		AIR CONDITIONER ASSEMBLY (SEE PG 05-084)	
		HEATER AND DEFROSTER KIT (SEE PG 05-084)	
2	01435-01220	BOLT, AIR CONDITIONER MOUNTING	3
3	07049-01215	PLUG	2
4	421-T43-1111	BOX ASSEMBLY	1
5	423-963-1330	· INSULATOR	2
6	423-963-1310	· INSULATOR	2
7	01435-01220	BOLT, BOX MOUNTING	4
8	421-07-12312	FILTER	2
9	425-07-11130	PLATE	2
10	01540-20840	NUT, WING	1
11	425-963-1210	BRACKET, BLOWER MOUNTING	1
12		BLOWER ASSEMBLY (SEE PG 05-094)	
13	01435-00820	BOLT, BLOWER MOUNTING	4
14	425-963-1180	DUCT, AIR	1
15	425-963-1170	DAMPER ASSEMBLY	1
16	01435-00820	BOLT, DAMPER MOUNTING	2
17	01643-30823	WASHER, DAMPER MOUNTING	2
18	01580-10806	NUT, DAMPER MOUNTING	2
22	421-T43-1211	COVER, BOX ASSEMBLY	1
23	423-T43-1430	FILTER, INNER	2
24	01435-00816	BOLT, FILTER MOUNTING	2
25	01220-40820	SCREW, FILTER MOUNTING	2
26	01643-30823	WASHER	6
27	01580-10806	NUT	2
28	421-T43-1340	PLATE	2
29	421-T43-1330	PLATE	2
30	01435-00616	BOLT	4
31	425-54-12960	SCREW	2
32	01643-30623	WASHER	4
33	08037-02512	GROMMET	1
34	421-07-12512	GRILLE ASSEMBLY	6
35	423-07-11110	INSULATOR	1
N/I	419-963-1550	COVER R.H	1
	421-54-18480	COVER	1
	01010-50816	BOLT	5
	01643-30823	WASHER	5
	419-963-1540	SUPPORT REWORK, R.H	1
	421-54-13292	SUPPORT (R.H.)	1

FIG 13EDW320.002 AIR CONDITIONER OR HEATER AND DEFROSTER PIPING (ENGINE TO HEATER CORE)

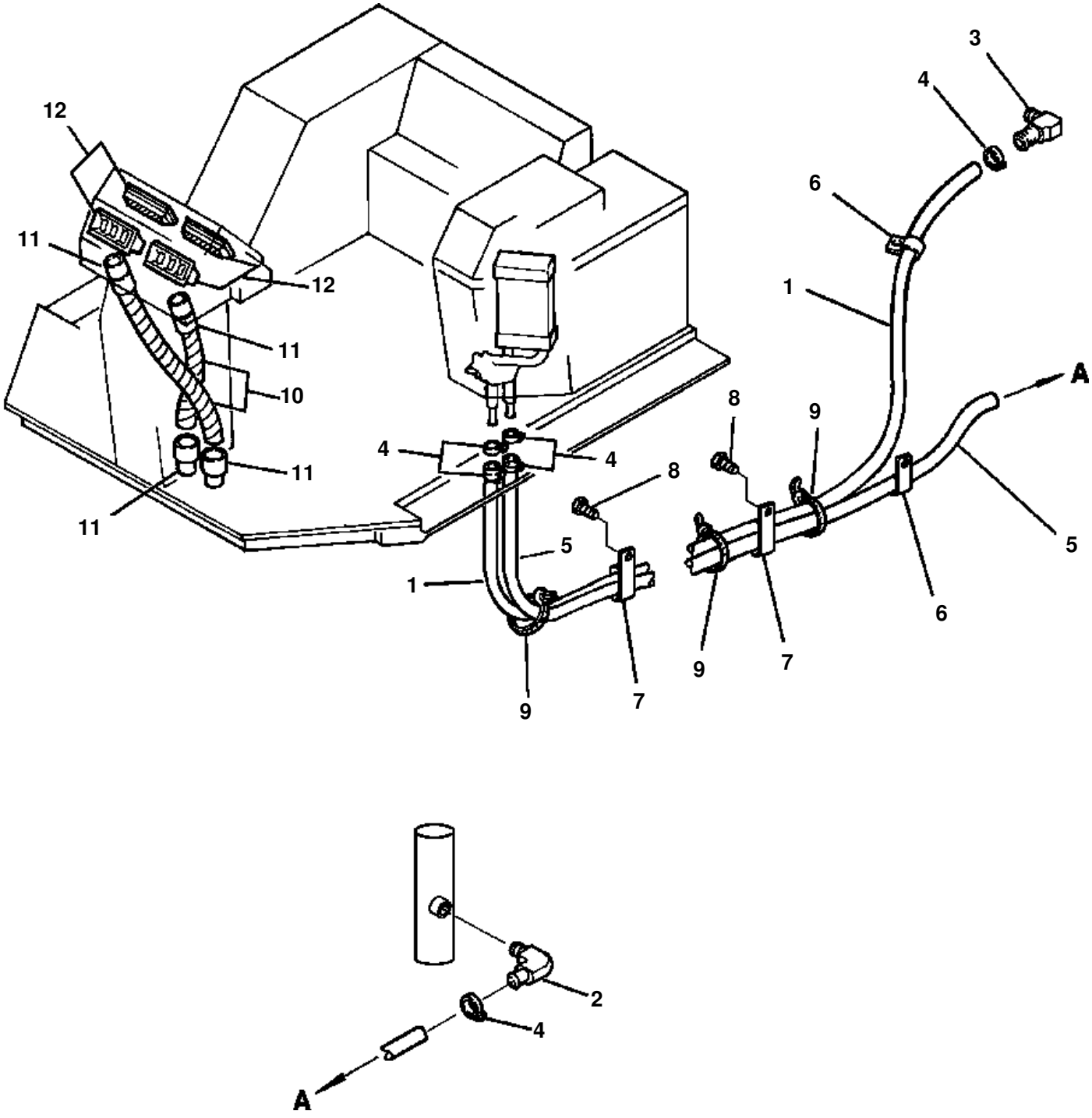

AIR CONDITIONER OR HEATER AND DEFROSTER PIPING (ENGINE TO HEATER CORE)

ITEM NO.	PART NO.	DESCRIPTION	Q'TY
1	419-07-13120	HOSE, ENGINE	1
2	6137-81-3221	ELBOW, AT RADIATOR	1
3	418-07-15110	ELBOW, AT ENGINE	1
4	07281-00259	CLAMP, HOSE	6
5	419-07-13110	HOSE, RAD	1
6	0836-02514	CLIP	2
	01435-0120	BOLT	2
7	421-07-11550	CLIP	2
8	01435-01220	BOLT	2
9	08034-00823	BAND	12
10	421-07-12831	HOSE	2
11	421-07-12810	CONNECTOR	4
12	421-07-12512	GRILLE ASSEMBLY	4
N/I	01010-51020	BOLT	2
	01643-31032	WASHER	2

FIG 13EDW320.001 AIR CONDITIONER PIPING CONDENSER, RECEIVER, COMPRESSOR, A/C UNITS

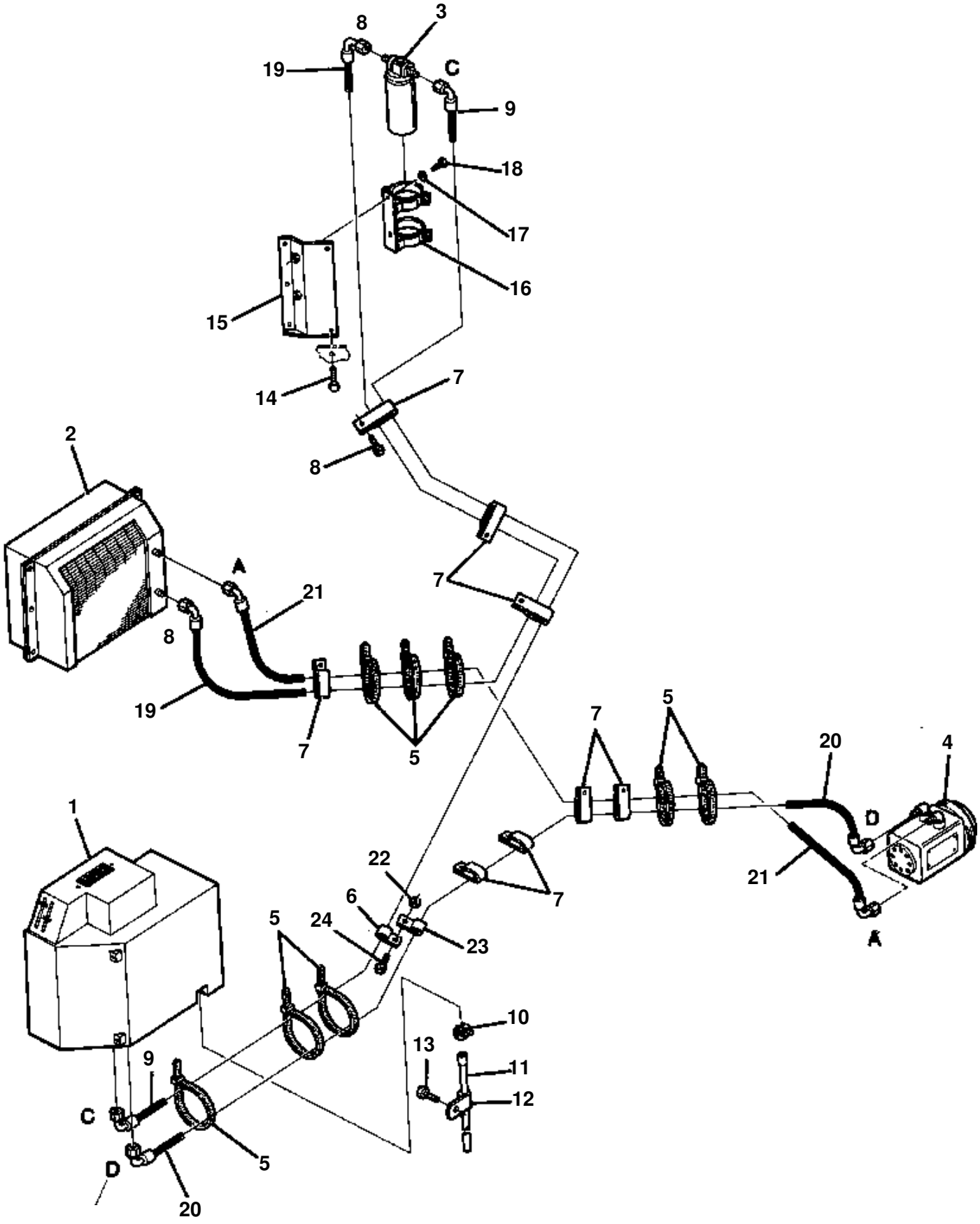

AIR CONDITIONER PIPING CONDENSER, RECEIVER, COMPRESSOR, A/C UNITS

ITEM NO.	PART NO.	DESCRIPTION	Q'TY
1		AIR CONDITIONER ASSY (SEE PG 05-084)	
2		CONDENSER (SEE PG 05-090)	
3		RECEIVER TANK (SEE PG 05-090)	
4		COMPRESSOR (SEE PG 05-092)	
5	08034-00823	BAND	8
6	424-09-12550	CLAMP	1
7	419-963-1430	CLAMP	8
8	01435-01016	BOLT	8
9	419-963-1441	HOSE, RECEIVER TANK TO A/C (C TO C)	1
10	07281-00259	CLAMP	1
11	425-963-1190	HOSE, DRAIN	1
12	08036-01814	CLAMP	1
13	01435-01016	BOLT	1
14	01435-01220	BOLT	2
15	419-963-1321	BRACKET	1
16	425-963-1150	RECEIVER HOLDER	1
17	NOT USED		
18	01435-00820	BOLT	2
19	419-963-1461	HOSE, CONDENSER TO RECEIVER (B TO B)	1
20	09488-70737	HOSE, A/C TO COMPRESSOR (D TO D)	1
21	419-963-1630	HOSE, COMPRESSOR TO CONDENSER (A TO A)	1
22	01584-01008	NUT	1
23	424-06-12790	CLAMP	1
24	01435-01025	BOLT	1

FIG 13FDW320.001 AIR CONDITIONER CONDENSER MOUNTING

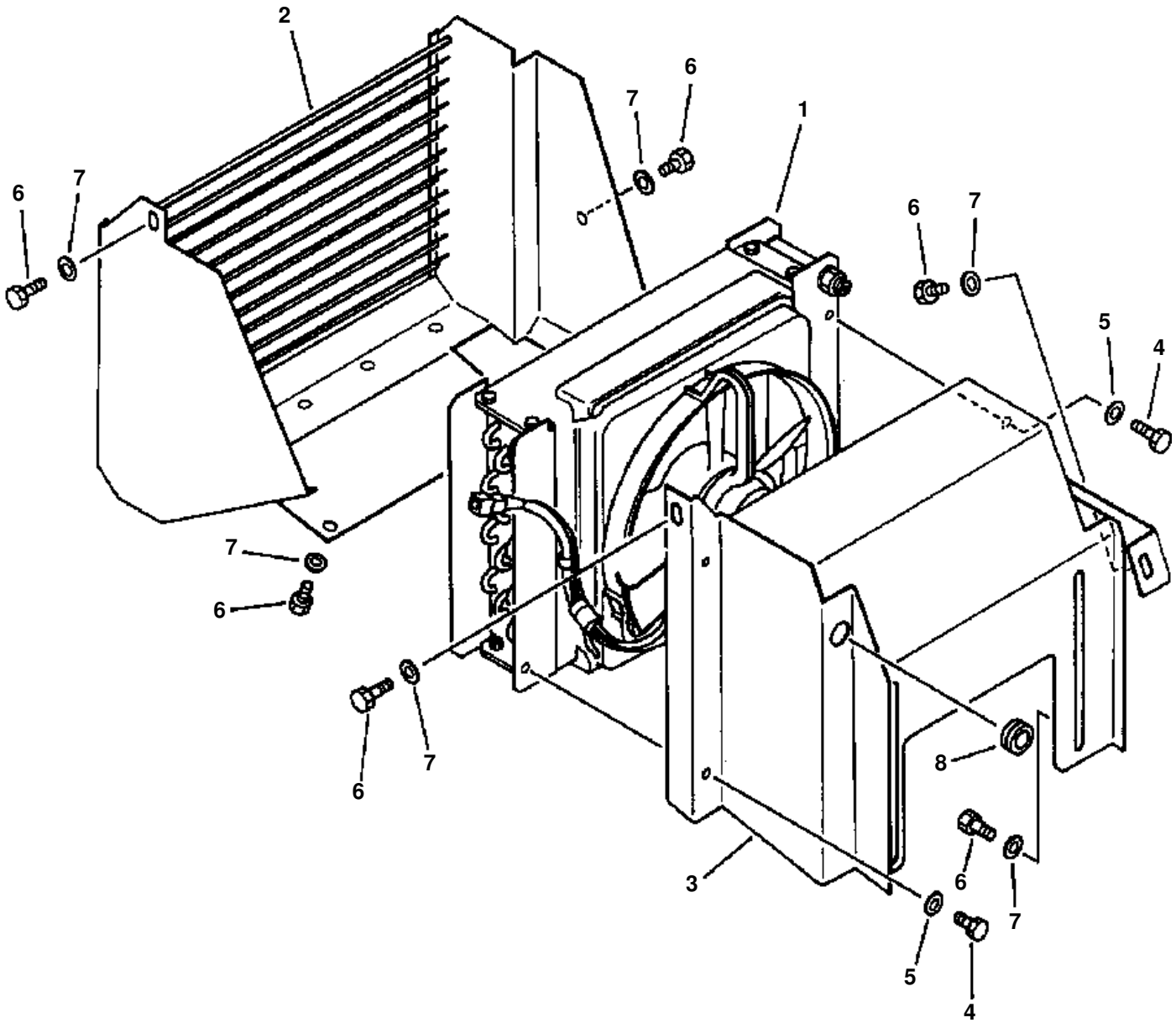

AIR CONDITIONER CONDENSER MOUNTING

ITEM NO.	PART NO.	DESCRIPTION	Q'TY
1		CONDENSER ASSEMBLY (SEE PG 05-090)	
2	419-963-1331	COVER	1
3	419-963-1321	BRACKET	1
4	01010-51020	BOLT	4
5	01643-31032	WASHER	4
6	01435-01225	BOLT	8
7	01643-31232	WASHER	8
8	08037-02512	GROMMET	1

FIG 13FDW320.003 AIR CONDITIONER UNIT (CONTROLS AND PANEL)

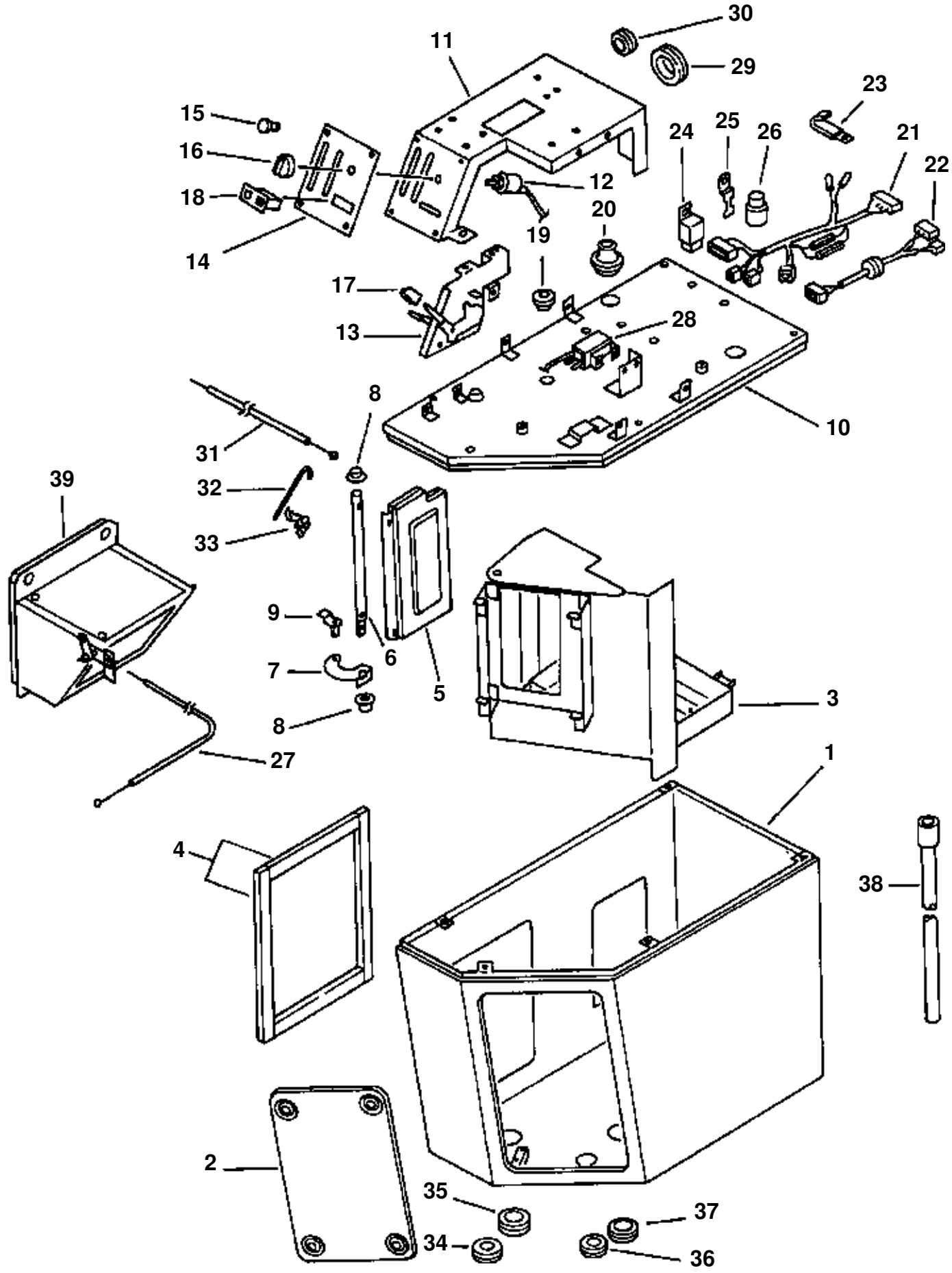

AIR CONDITIONER UNIT (CONTROLS AND PANEL)

ITEM NO.	PART NO.	DESCRIPTION	Q'TY
	418-963-1100	AIR CONDITIONER KIT	1
	418-T42-1101	HEATER KIT	1
	426-963-1111	· AIR CONDITIONER ASSEMBLY	1
1	425-963-1611	· · CASE ASSEMBLY	1
2	425-963-1621	· · COVER ASSEMBLY	1
3	425-963-1640	· · CASE ASSEMBLY	1
4	425-963-1830	· · PACKING	2
5	425-963-1670	· · DAMPER ASSEMBLY	1
6	425-963-1750	· · · SHAFT	1
7	425-963-1760	· · LEVER, CONTROL	1
8	425-963-2190	· · INSERT	2
9	425-963-2210	· · BUSHING	1
10	425-963-1631	· · COVER ASSEMBLY	1
11	425-963-1770	· · COVER, CONTROL	1
12	425-963-2260	· · SWITCH, BLOWER	1
13	425-963-1780	· · LEVER ASSEMBLY, AIR CONDITIONER CONTROLS	1
14	425-963-1790	· · PANEL, AIR CONDITIONER CONTROL	1
15	425-963-1880	· · CLAMP	4
16	425-963-1850	· · KNOB	1
17	425-963-1860	· · KNOB	2
18	425-963-2270	· · SWITCH, AIR CONDITIONER	1
19	425-963-2160	· · GROMMET	1
20	425-963-2170	· · GROMMET	1
21	425-963-1810	· · WIRING ASSEMBLY	1
22	425-963-1820	· · WIRING ASSEMBLY	1
23	425-963-1870	· · CLAMP	4
24	425-963-1930	· · RELAY, AIR CONDITIONER	1
25	425-963-2250	· · BRACKET	1
26	425-963-1920	· · RELAY, CONDENSER	1
27	425-963-2280	· · CABLE	1
28	425-963-1940	· · THERMOSTAT	1
29	425-963-1960	· · GROMMET	1
30	425-963-1970	· · GROMMET	1
31	425-963-1690	· · CABLE	1
32	425-963-1680	· · SHAFT	1
33	425-963-2220	· · CLAMP	1
34	425-963-2120	· · GROMMET	1
35	425-963-2130	· · GROMMET	1
36	425-963-2140	· · GROMMET	1
37	425-963-2150	· · GROMMET	1
38	425-963-1190	· HOSE, DRAIN	1
39	425-963-1170	· DAMPER ASSEMBLY	1
N/I	419-963-1530	· WIRE HARNESS	1
	418-T42-1512	· WIRE, HARNESS - HEATER	1
	419-963-1520	· WIRE HARNESS	1
	425-963-1520	· WIRE HARNESS	1

FIG 13FDW250.004 AIR CONDITIONER EVAPORATOR AND HEATER COIL

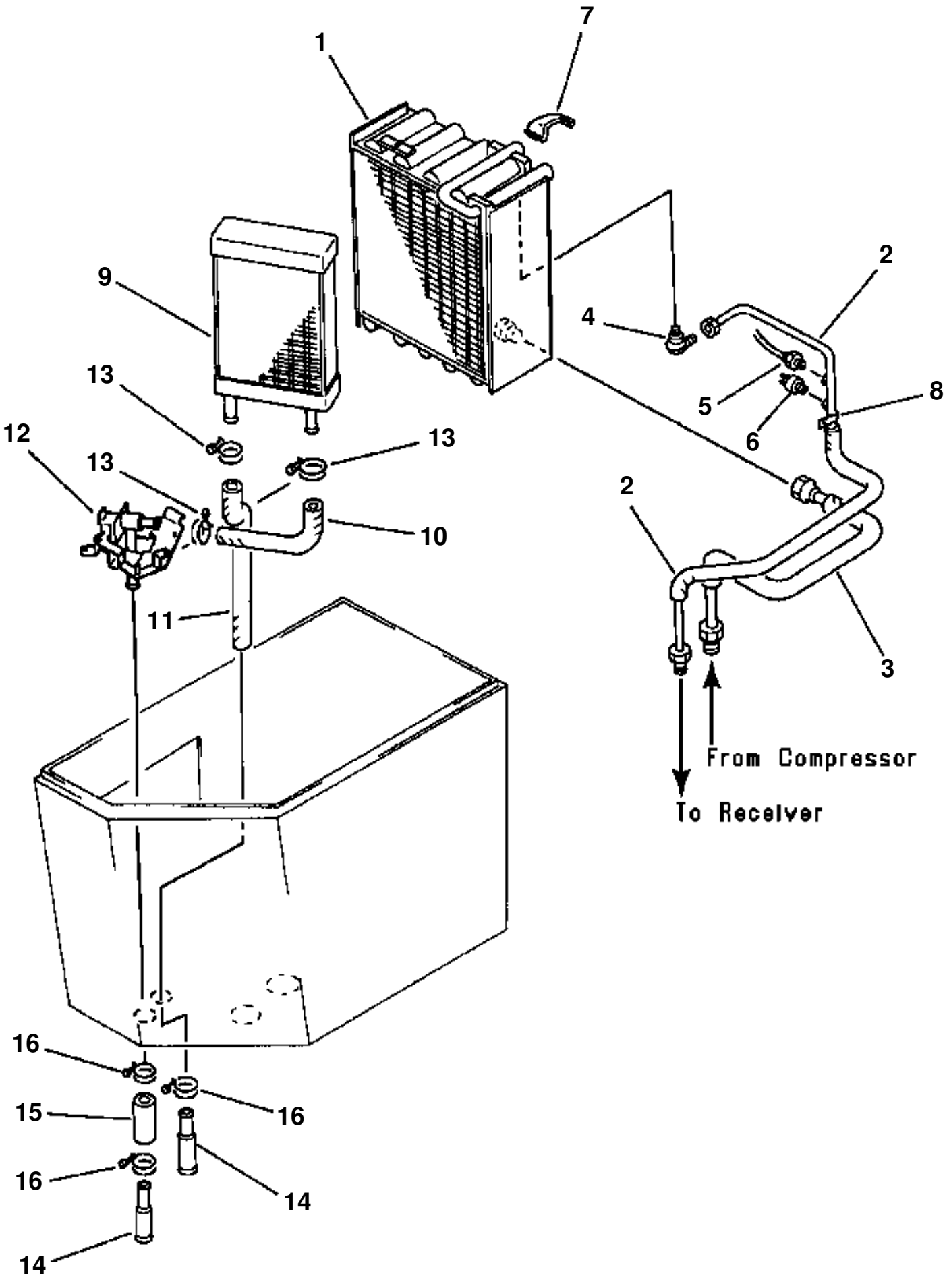

AIR CONDITIONER EVAPORATOR AND HEATER COIL

ITEM NO.	PART NO.	DESCRIPTION	Q'TY
		AIR CONDITIONER ASSEMBLY (SEE PG 05-084)	
1	425-963-1650	· EVAPORATOR	1
2	423-T43-1130	· TUBE, LIQUID - TO RECEIVER	1
3	425-963-1720	· TUBE, SUCTION - FROM COMPRESSOR	1
4	425-963-2180	· VALVE, EXPANSION	1
5	425-963-1890	· SWITCH, LOW PRESSURE	1
6	425-963-1910	· SWITCH, HIGH PRESSURE	1
7	425-963-2230	· CLIP, HOLDING	1
8	425-963-2240	· CLAMP	1
9	425-963-1660	· COIL ASSEMBLY, HEATER	1
10	425-963-1730	· HOSE, HEATER COIL	1
11	425-963-1740	· HOSE, HEATER COIL	1
12	425-963-1840	· VALVE, HEATER SHUT-OFF	1
13	425-963-1950	· CLAMP, HOSE	3
14	425-963-2290	· PIPE	2
15	425-963-2310	· HOSE	1
16	425-963-2320	· CLAMP, HOSE	3

FIG 13FDW250.006 AIR CONDITIONER CONDENSER ASSEMBLY

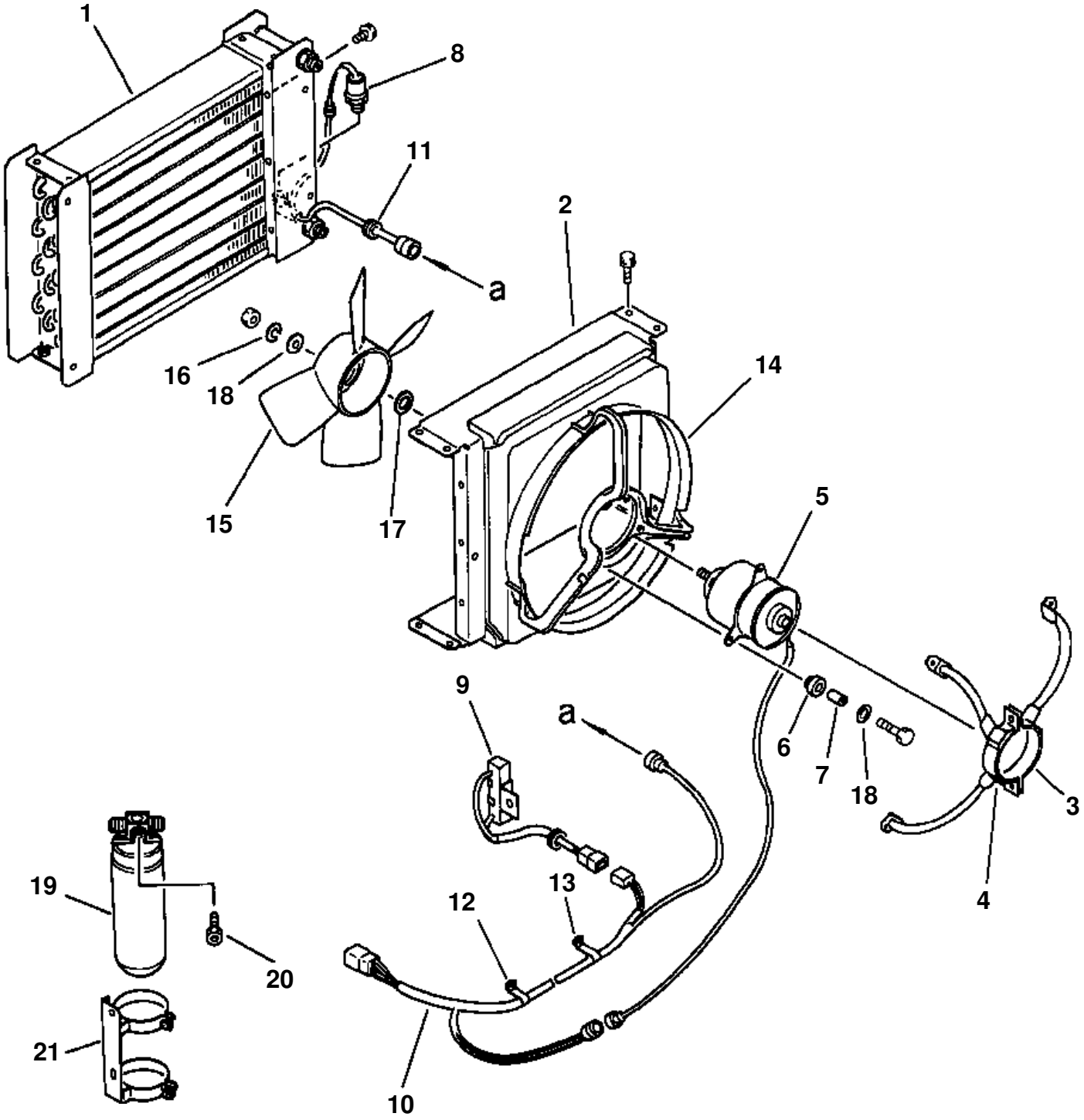

AIR CONDITIONER CONDENSER ASSEMBLY

ITEM NO.	PART NO.	DESCRIPTION	Q'TY
	425-963-1120	CONDENSER ASSEMBLY	1
1	425-963-2510	· CONDENSER	1
2	425-963-2520	· SHROUD, FAN	1
3	425-963-2530	· BRACKET	1
4	425-963-2540	· BRACKET	1
5	425-963-2550	· MOTOR ASSEMBLY	1
6	425-963-2560	· BUSHING, RUBBER	3
7	425-963-2570	· BUSHING, STEEL	3
8	425-963-2580	· SWITCH, PRESSURE	1
9	425-963-2590	· RESISTOR, BLOWER	1
10	425-963-2610	· WIRING	1
11	425-963-2620	· GROMMET	1
12	425-963-2630	· CLAMP	2
13	425-963-2640	· CLAMP	1
14	425-963-2650	· SHROUD, FAN	1
15	425-963-2670	· FAN, COOLING	1
16	425-963-2680	· WASHER	1
17	425-963-2690	· RING, SPACER	1
18	425-963-2710	· WASHER	4
19	198-911-4610	· TANK, RECEIVER	1
20	145-Z79-4860	· BOLT, FUSE	1
21	425-963-1150	· HOLDER, RECEIVER	1
	01010-50816	· · BOLT	3
	01643-30823	· · WASHER	3

FIG 13EMW420.001 AIR CONDITIONER COMPRESSOR AND CLUTCH

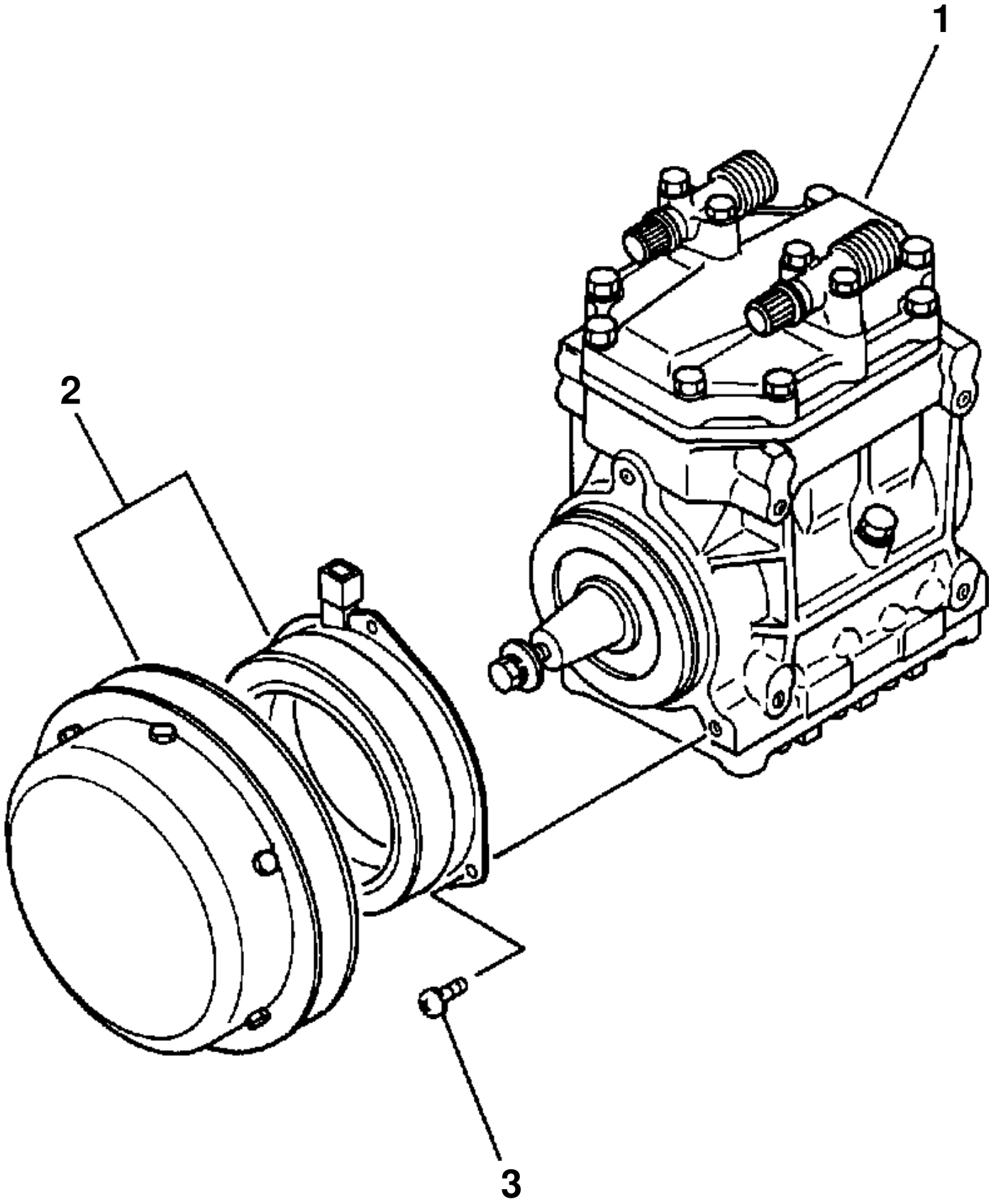

AIR CONDITIONER COMPRESSOR AND CLUTCH

ITEM NO.	PART NO.	DESCRIPTION	Q'TY
	418-963-1210	COMPRESSOR ASSEMBLY	1
1	425-963-2810	· COMPRESSOR SUB ASSEMBLY	1
2	418-963-1220	· CLUTCH ASSEMBLY, MAGNET	1
3	418-963-1230	· BOLT, WITH WASHER	3

FIG 13EZW250.003 AIR CONDITIONER OR HEATER UNIT BLOWER AND FAN

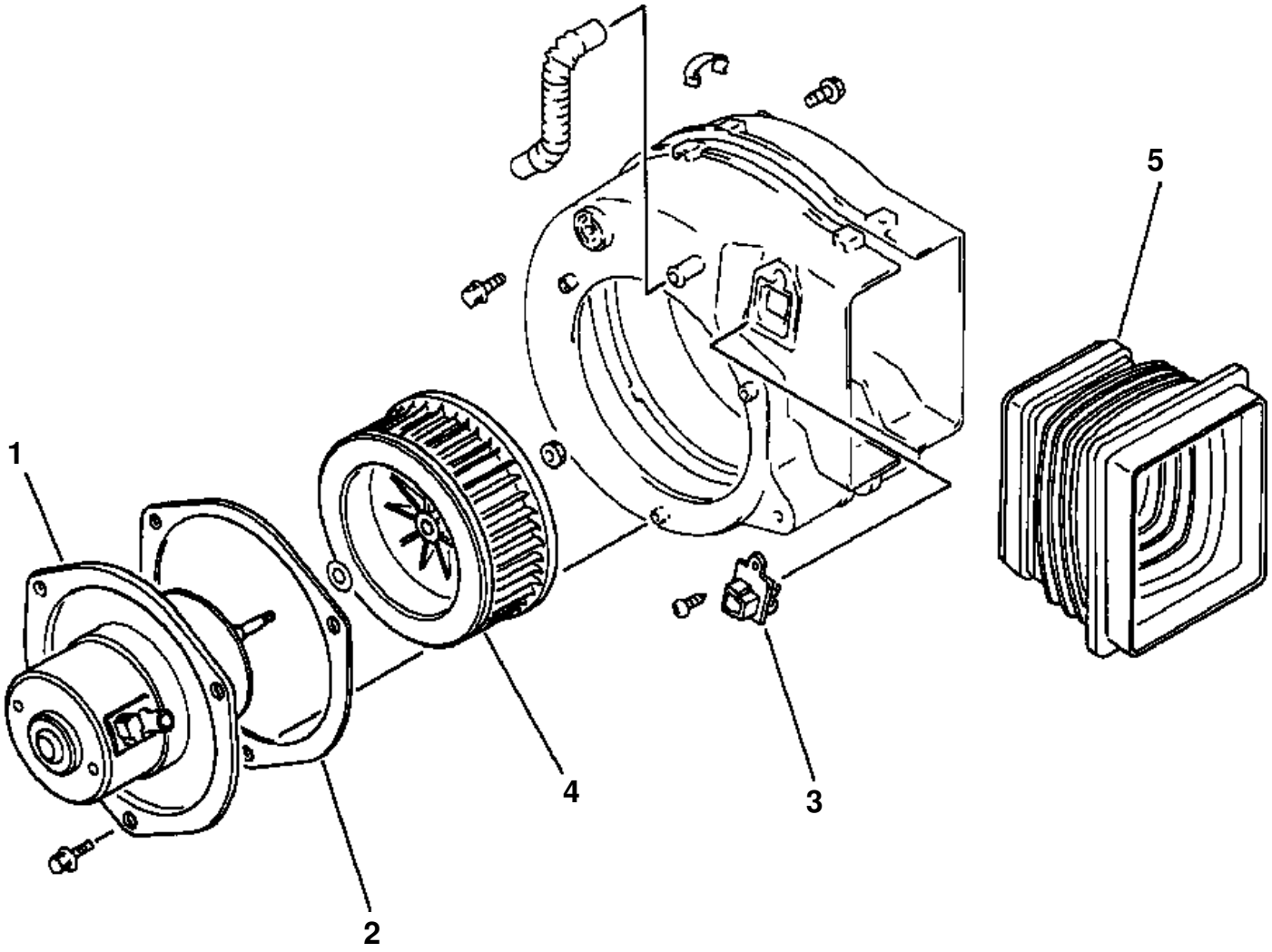

AIR CONDITIONER OR HEATER UNIT BLOWER AND FAN

ITEM NO.	PART NO.	DESCRIPTION	Q'TY	REF
	425-963-1160	BLOWER ASSEMBLY	1	F1
1	425-963-2410	· MOTOR ASSEMBLY	1	
2	425-963-2420	· PACKING	1	
3	425-963-2430	· RESISTOR, BLOWER	1	
4	425-963-2440	· FAN, BLOWER	1	
N/I	425-963-2680	· NUT	1	
5	425-963-1180	DUCT, AIR	1	
		F1 - FOR MOUNTING, SEE PG 05-075 OR 05-077.		

DESCRIPTION
HYDRAULIC PUMP (LIFT, DUMP, AND STEERING)
HYDRAULIC PUMP
HYDRAULIC PUMP
HYDRAULIC TANK
HYDRAULIC RESERVOIR BREATHER
2-SPOOL CONTROL VALVE
MAIN RELIEF VALVE
SUCTION AND SAFETY VALVE
SUCTION VALVE
CYLINDER ASSEMBLY LIFT ARM
DUMP CYLINDER
HYDRAULIC PIPING (TANK TO PUMP TO PRIORITY VALVE)
HYDRAULIC PIPING (PRIORITY VALVE TO CONTROL VALVE)
HYDRAULIC PIPING (CONTROL VALVE TO LIFT CYLINDERS)
HYDRAULIC PIPING (CONTROL VALVE TO DUMP CYLINDER)
HYDRAULIC PIPING (CONTROL VALVE TO TANK - RETURN LINE)
WORK EQUIPMENT CONTROL LEVERS
BOOM-KICK OUT AND BUCKET POSITIONER

FIG 10AVW320.001 HYDRAULIC PUMP (LIFT, DUMP, AND STEERING)

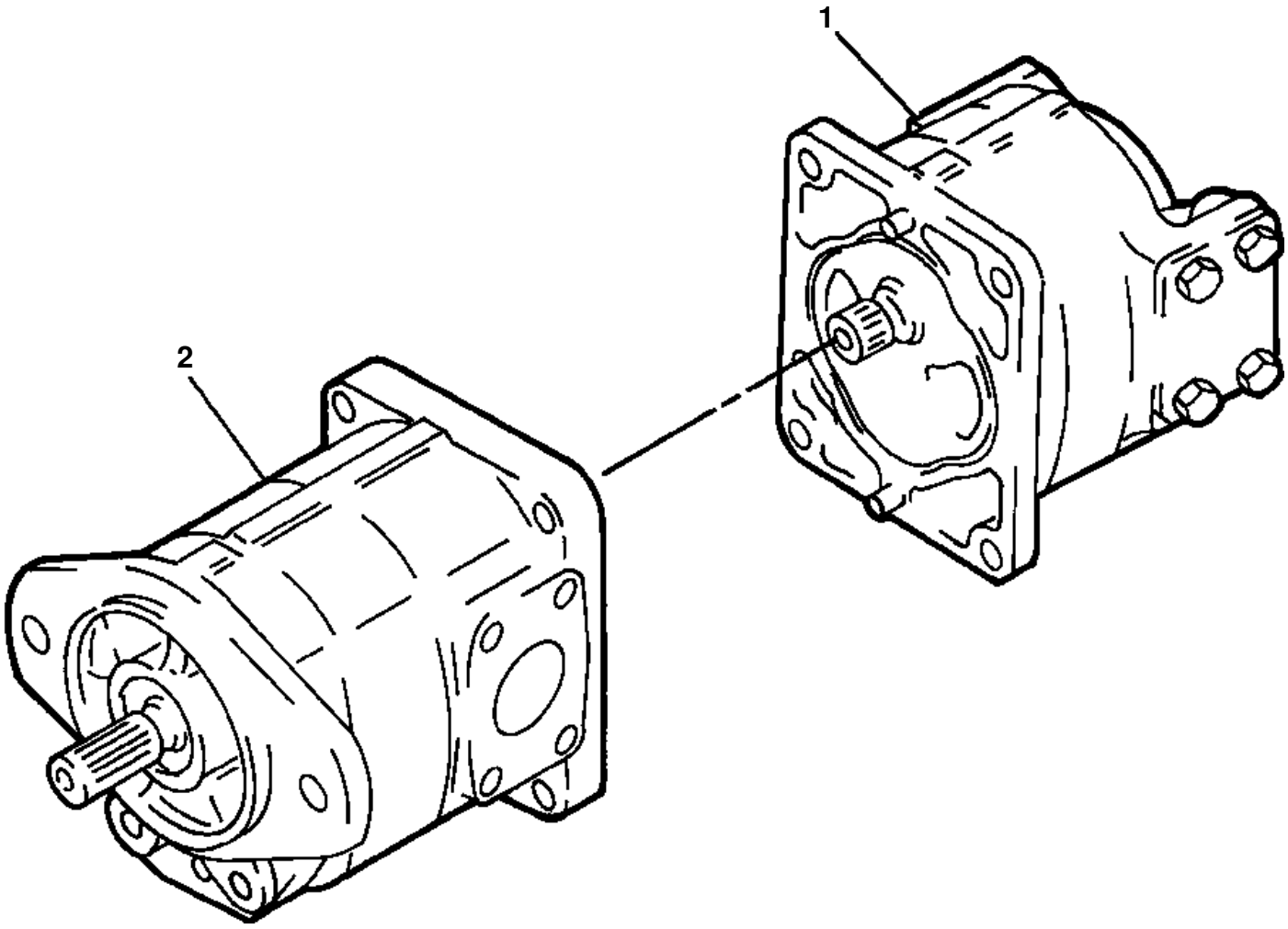

HYDRAULIC PUMP (LIFT, DUMP, AND STEERING)

ITEM NO.	PART NO.	DESCRIPTION	Q'TY
	705-51-32080	PUMP ASSEMBLY, LIFT/DUMP/STEERING	1
1		· PUMP (SEE PG 06-006)	
2		· PUMP (SEE PG 06-004)	

FIG 10AVW320.002 **HYDRAULIC PUMP**

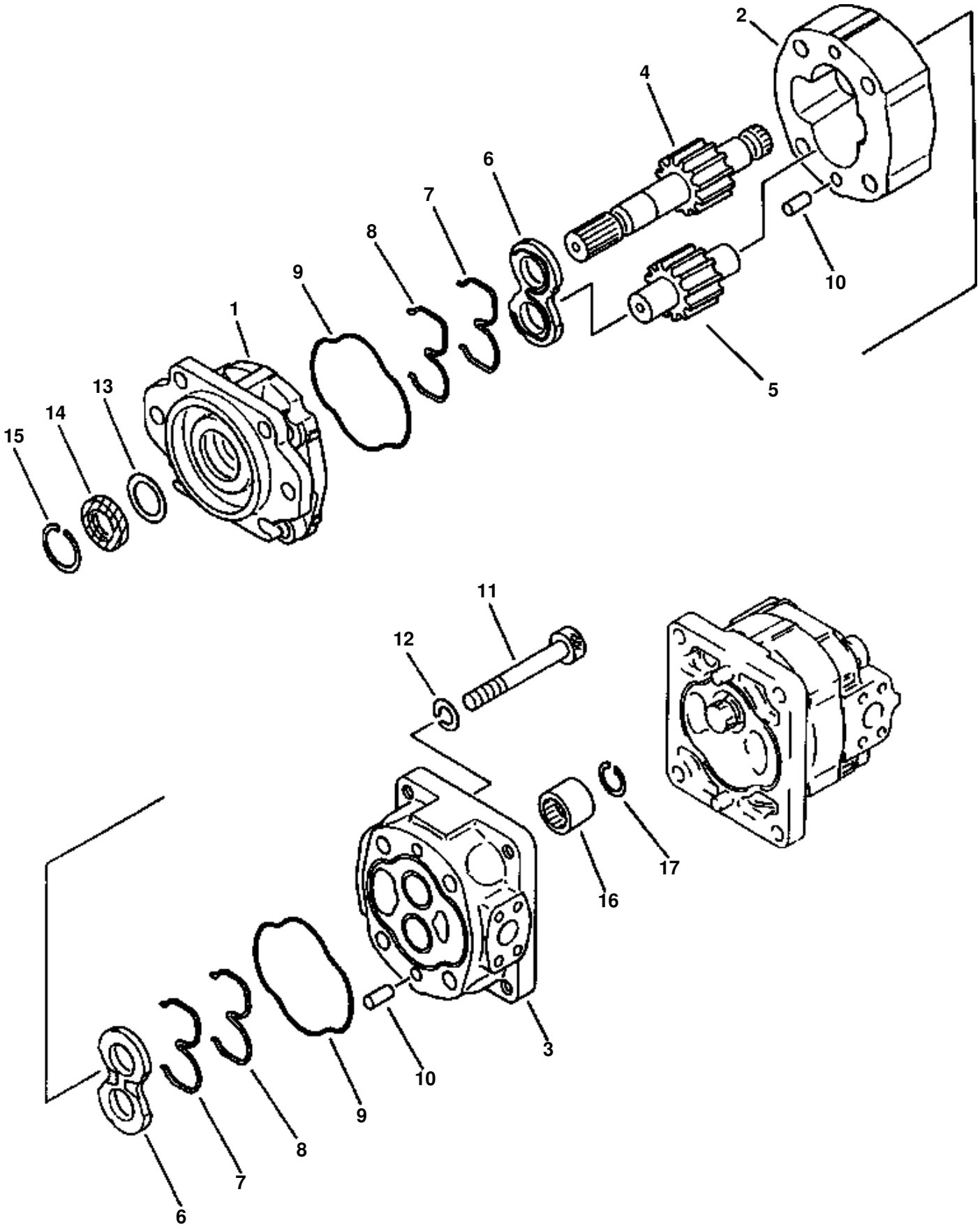

HYDRAULIC PUMP

ITEM NO.	PART NO.	DESCRIPTION	Q'TY	REF
	705-11-36250	PUMP ASSEMBLY	1	
1	705-17-03012	· BRACKET	1	F1
2	705-17-36010	· CASE. GEAR	1	F1
3	705-17-03220	· CARRIER	1	F1
4	705-17-36431	· GEAR, DRIVE	1	F1
5	705-17-36511	· GEAR, DRIVEN	1	F1
6	705-17-03610	· PLATE, SIDE	2	
7	705-17-03443	· RING, BACK-UP	2	
8	705-17-03473	· RING, SEAL	2	
9	705-17-03381	· O-RING	2	
10	04020-01228	· PIN, DOWEL	4	
11	705-17-03750	· BOLT	4	
12	01643-51645	· WASHER	4	
13	705-17-03870	· PLATE	1	
14	705-17-03811	· SEAL, OIL	1	
15	04065-05220	· RING, SNAP	1	
16	705-17-03330	COUPLING	1	
17	04065-02012	RING, SNAP	1	
		F1 - PARTS ARE SUPPLIED SEPARATELY ONLY TO DESIGNATED DEALERS WHICH ARE EQUIPPED WITH A HYDRAULIC PUMP TESTER.		

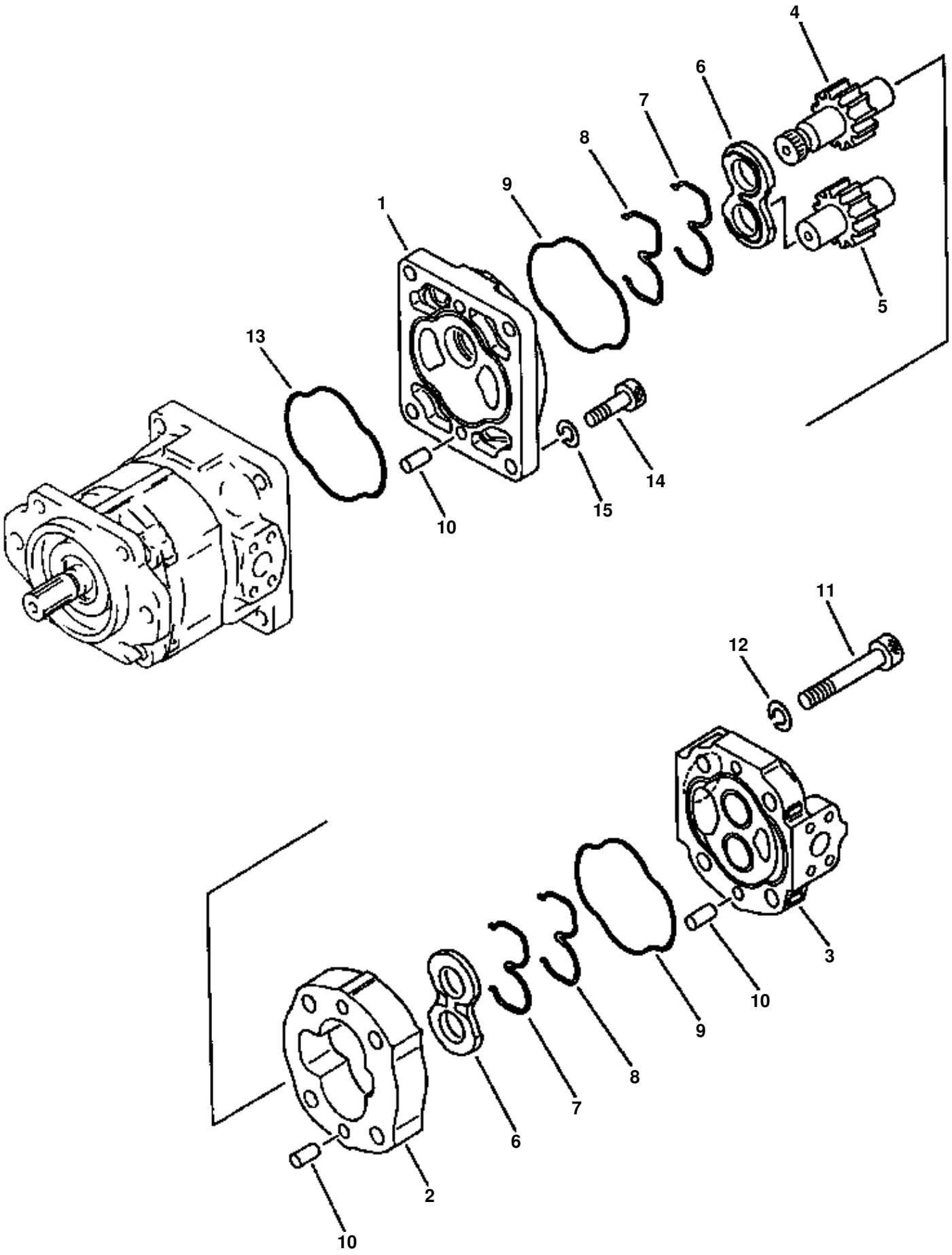
4
6
7
8
9
1
5
13
14
15
10
11
12
3
10
9
8
7
6
2
10

HYDRAULIC PUMP

ITEM NO.	PART NO.	DESCRIPTION	Q'TY	REF
	705-11-30540	PUMP ASSEMBLY	1	
1	705-17-03511	· BRACKET	1	F1
2	705-17-30010	· CASE, GEAR	1	F1
3	705-17-03121	· COVER	1	F1
4	705-18-30450	· GEAR, DRIVE	1	F1
5	705-18-30510	· GEAR, DRIVEN	1	F1
6	705-17-03610	· PLATE, SIDE	2	
7	705-17-03443	· RING, BACK-UP	2	
8	705-17-03473	· RING, SEAL	2	
9	705-17-03381	· O-RING	2	
10	04020-01228	· PIN, DOWEL	6	
11	705-17-03720	· BOLT	4	
12	01643-51645	· WASHER	4	
13	705-17-03381	· O-RING	1	
14	705-17-03720	· BOLT	4	
15	01643-51645	· WASHER	4	
		F1 - PARTS ARE SUPPLIED SEPARATELY ONLY TO DESIGNATED DEALERS WHICH ARE EQUIPPED WITH A HYDRAULIC PUMP TESTER.		

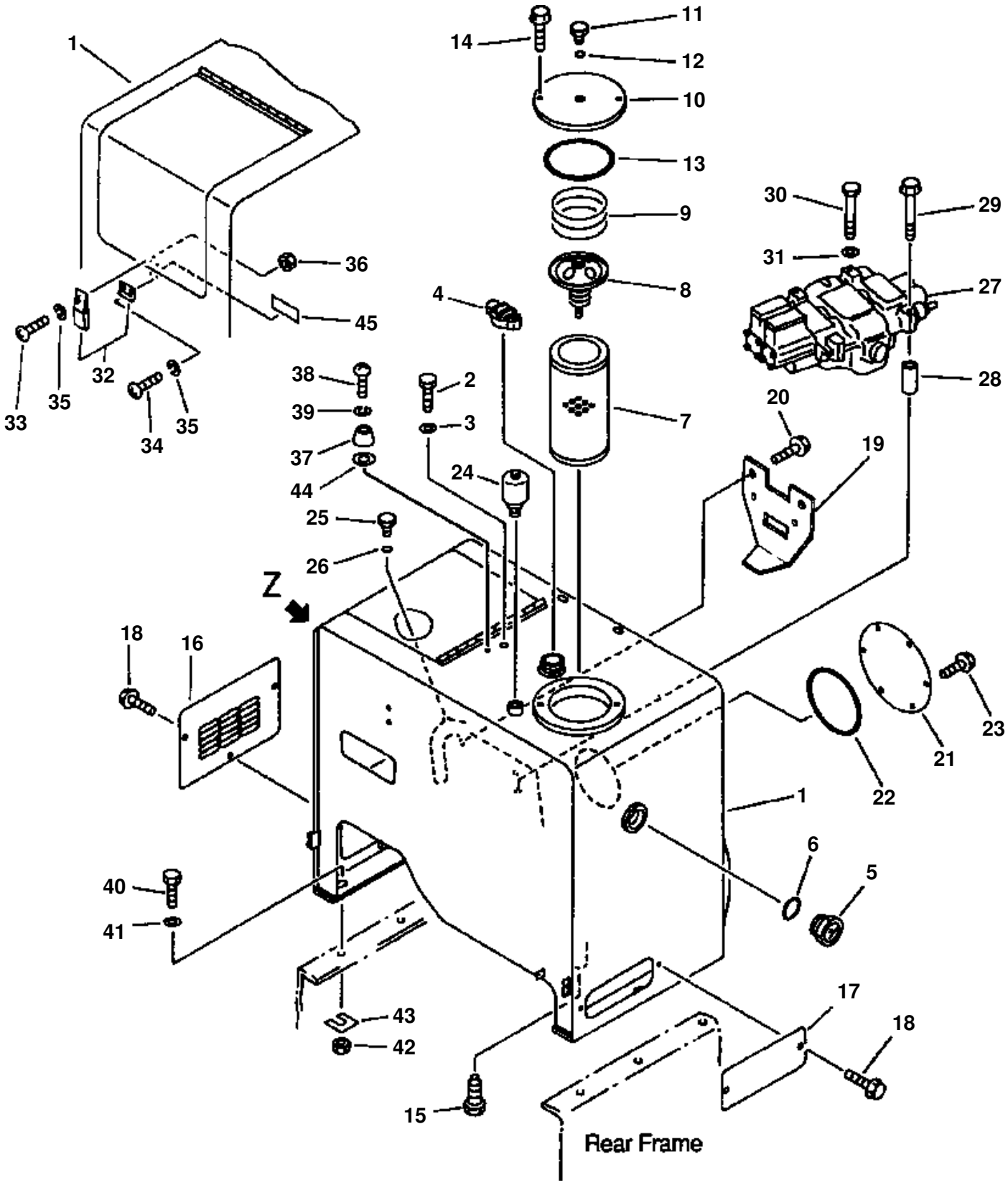
1
14
11
12
10
13
9
8
4
7
30
29
31
27
28
36
45
32
33
35
34
35
38
39
37
44
2
3
24
25
26
20
19
Z
18
16
23
21
22
1
6
5
40
41
43
42
17
18
15
Rear Frame

HYDRAULIC TANK

ITEM NO.	PART NO.	DESCRIPTION	Q'TY
1	419-60-15118	TANK ASSEMBLY, HYDRAULIC	1
2	01010-51625	BOLT	1
3	01643-31645	WASHER	1
4	07092-01000	CAP	1
5	421-60-11622	GAUGE, SIGHT	1
6	07002-05234	O-RING	1
7	07063-01142	ELEMENT, FILTER	1
8	195-60-16300	VALVE ASSEMBLY	1
9	195-60-16330	SPRING	1
10	419-60-15350	COVER	1
11	424-60-15150	PLUG	1
12	07000-02010	O-RING	1
13	07000-05175	O-RING	1
14	01435-01225	BOLT	2
15	424-01-11110	PLUG	1
16	419-60-15131	PLATE	1
17	419-60-15141	PLATE	1
18	01435-01225	BOLT	5
19	419-60-15510	COVER	1
20	01435-01220	BOLT	2
21	419-60-15340	PLATE	1
22	07000-05200	O-RING	1
23	01435-01020	BOLT	6
24		BREATHER ASSEMBLY (SEE PG 06-012)	
25	07040-10807	PLUG	2
26	07002-00823	O-RING	2
27		CONTROL VALVE (SEE PG 06-014)	
28	419-64-13110	SPACER	1
29	01435-01280	BOLT	2
30	01011-51245	BOLT	1
31	01643-31232	WASHER	1
32	421-09-12320	HOLDER	1
33	01220-40412	SCREW	3
34	01220-40406	SCREW	2
35	01601-20410	WASHER, SPRING	5
36	01580-10403	NUT	3
37	418-60-15150	STOPPER	1
38	01220-40630	SCREW	1
39	01602-20619	WASHER, SPRING	1
40	01010-31650	BOLT	6
41	01643-31645	WASHER	12
42	01580-01613	NUT	6
43	418-46-12310	SHIM, 1.0mm	10
44	175-54-34170	WASHER	1
45	421-09-12780	STRIP, CUSHION	1
N/I	419-60-15340	COVER	1
	419-60-15510	BRACKET	1

FIG 10BVW250.002 HYDRAULIC RESERVOIR BREATHER

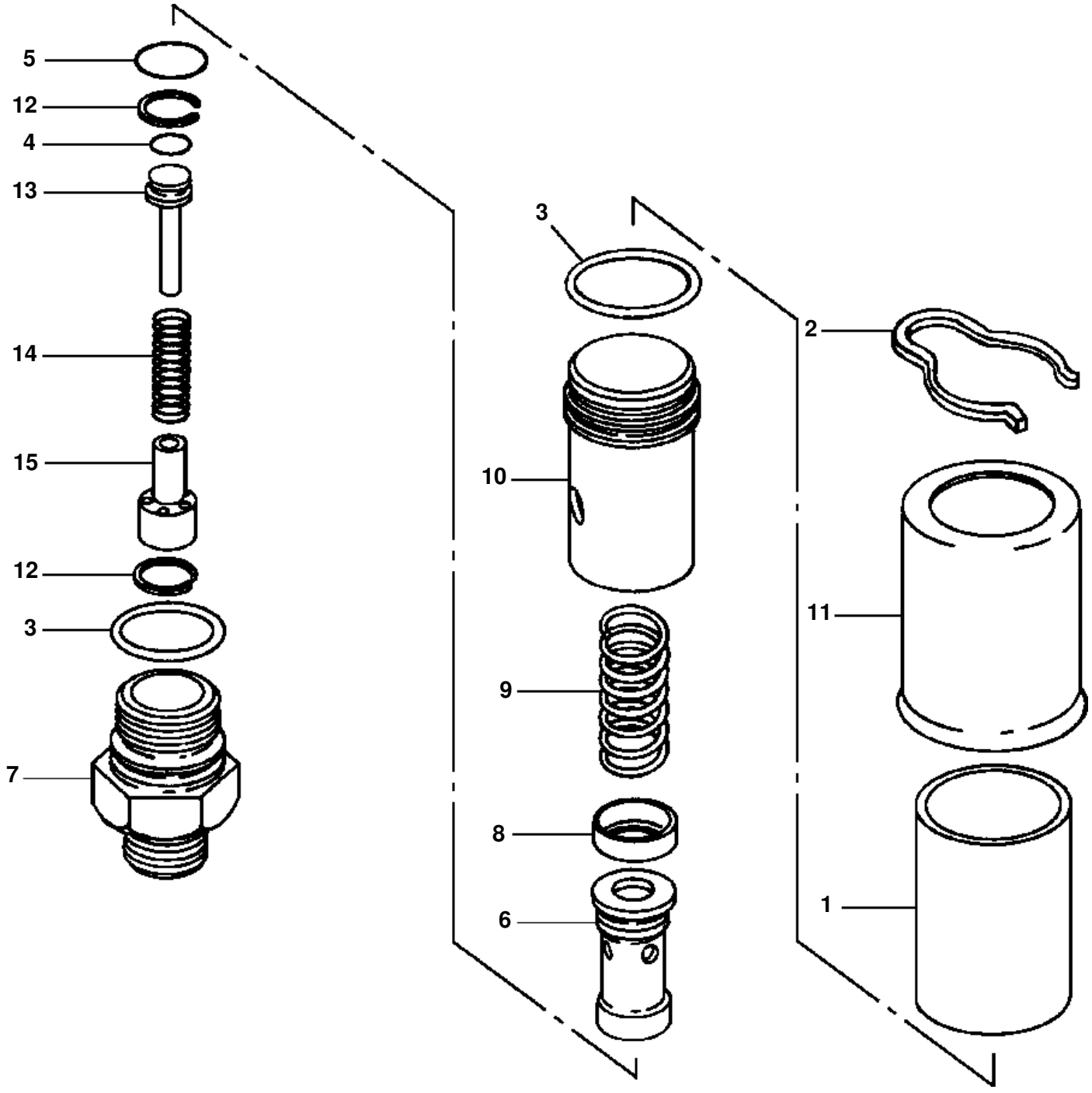

HYDRAULIC RESERVOIR BREATHER

ITEM NO.	PART NO.	DESCRIPTION	Q'TY
	419-60-15231	BREATHER ASSEMBLY, HYDRAULIC RESERVOIR	1
1	285-62-17320	· ELEMENT, FILTER	1
2	424-60-15220	· RING, SNAP	1
3	419-60-15370	· O-RING	2
4	419-60-15380	· O-RING	1
5	419-60-15390	· O-RING	1
6	(NSS)	· BODY, VALVE	1
7	(NSS)	· BODY, BREATHER	1
8	(NSS)	· SEAT, SPRING	1
9	(NSS)	· SPRING	1
10	(NSS)	· CAP, VALVE	1
11	(NSS)	· COVER	1
12	(NSS)	· RING, LOCK	2
13	(NSS)	· POPPET, VALVE	1
14	(NSS)	· SPRING, VALVE POPPET	1
15	(NSS)	· GUIDE, VALVE POPPET	1

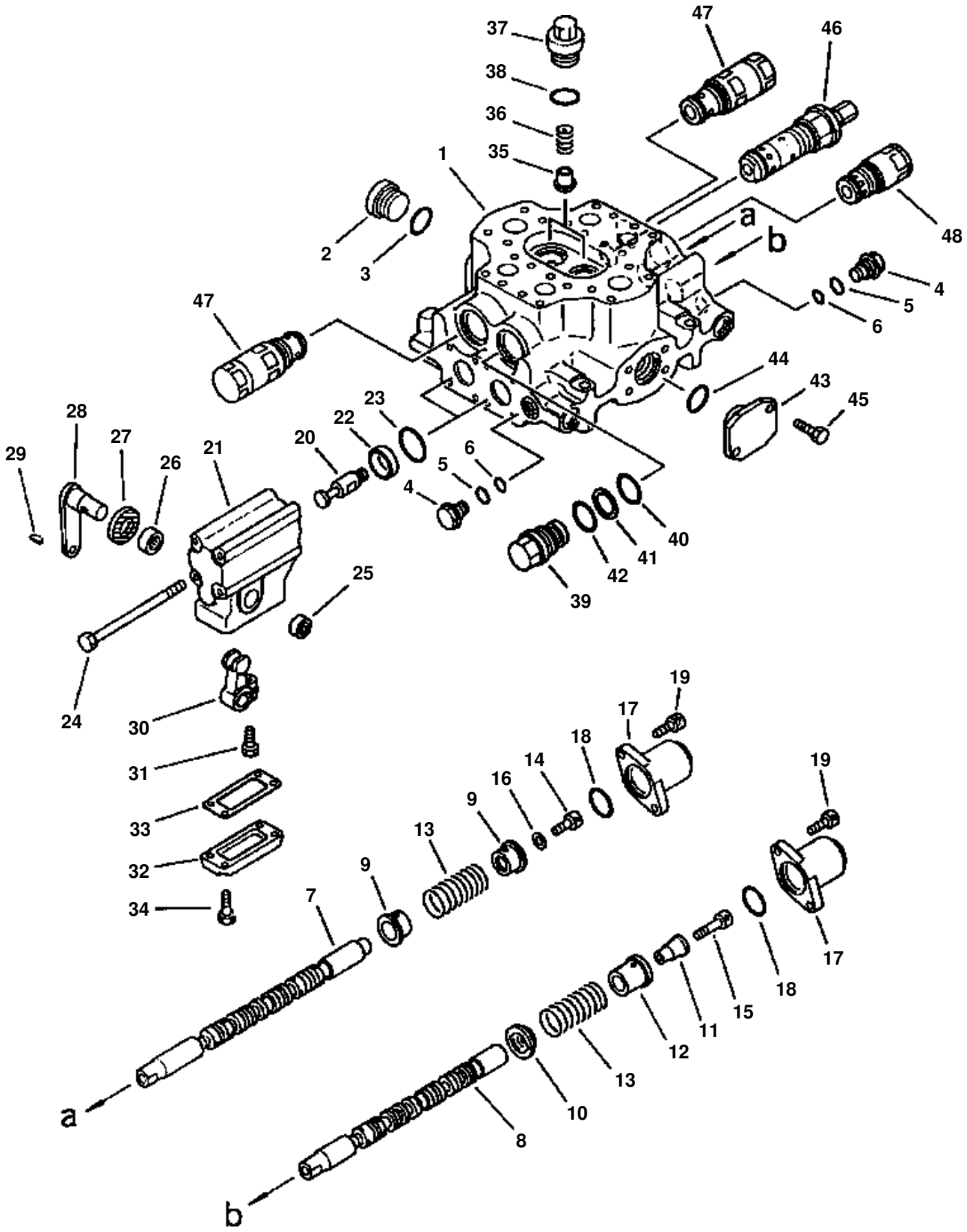
37
38
36
35
1
2
3
47
46
48
a
b
4
5
6
47
44
43
45
23
22
20
21
28
27
26
29
6
5
4
40
41
42
39
25
24
30
31
33
32
34
19
17
18
14
16
9
13
9
7
19
17
18
15
11
12
13
10
8
a
b

2-SPOOL CONTROL VALVE

ITEM NO.	PART NO.	DESCRIPTION	Q'TY
	700-92-14002	VALVE ASSEMBLY, 2-SPOOL CONTROL	1
N/I	01435-01280	BOLT	2
	01011-51245	BOLT	1
	01643-31232	WASHER	1
	419-64-13110	SPACER	1
	700-92-00020	· BODY GROUP ASSEMBLY	1
1	(NSS)	· · BODY	1
2	07040-13618	· · PLUG	1
3	07002-13634	· · O-RING	1
4	700-22-11360	· · PLUG	2
5	07002-02434	· · O-RING	2
6	07000-02014	· · O-RING	2
7	(NSS)	· · SPOOL, DUMP	1
8	(NSS)	· · SPOOL, LIFT	1
9	700-93-11870	· · RETAINER	2
10	700-92-11340	· · RETAINER	1
11	700-92-11351	· · COLLAR	1
12	700-92-11360	· · RETAINER	1
13	700-93-11880	· · SPRING	2
14	01252-31016	· · BOLT	1
15	01252-31040	· · BOLT	1
16	01643-31032	· · WASHER	1
17	700-93-11920	· · CASE	2
18	07430-71380	· · O-RING	2
19	01252-30820	· · BOLT	4
20	700-92-11260	· · JOINT	2
21	700-93-11710	· · CASE, LEVER	2
22	700-93-11720	· · COLLAR	2
23	07430-71380	· · O-RING	2
24	700-93-11730	· · BOLT	8
25	700-93-11740	· · BEARING	2
26	700-93-11750	· · BEARING	2
27	700-93-11762	· · SEAL, OIL	2
28	700-92-11270	· · LEVER	2
29	04010-00416	· · KEY	2
30	700-93-11780	· · LEVER	2
31	01010-30825	· · BOLT	2
32	700-93-11790	· · PLATE	2
33	700-93-11810	· · GASKET	2
34	01010-30820	· · BOLT	8
35	700-93-11461	· · VALVE, CHECK	2
36	700-93-11471	· · SPRING	2
37	700-93-11481	· · PLUG	2
38	07002-13634	· · O-RING	2
39	700-93-11350	· · PLUG	1
40	700-93-11320	· · O-RING	1
41	700-93-11330	· · RING, BACH-UP	1
42	07002-03634	· · O-RING	1
43	700-93-12110	· · FLANGE	1
44	07000-03035	· · O-RING	1
45	01010-51025	· · BOLT	2
46		· VALVE ASSEMBLY, MAIN RELIEF (SEE PG 06-018)	
47		· VALVE ASSEMBLY, SUCTION & SAFETY (SEE PG 06-020)	
48		· VALVE ASSEMBLY, SUCTION (SEE PG 06-022)	

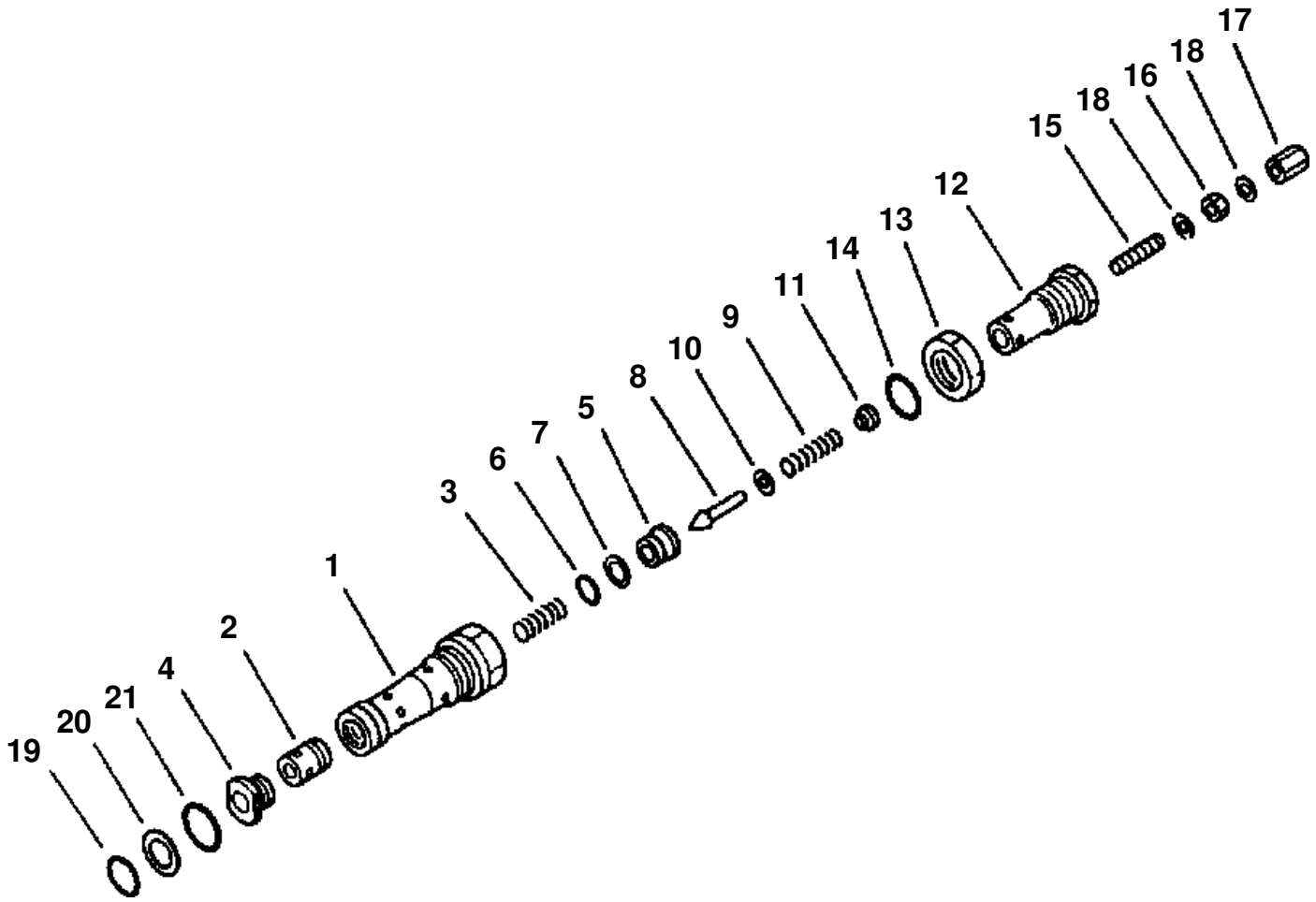
17
18
16
18
15
12
13
14
11
9
10
8
5
7
6
3
1
2
4
21
20
19

MAIN RELIEF VALVE

ITEM NO.	PART NO.	DESCRIPTION	Q'TY
	700-93-56000	VALVE ASSEMBLY, MAIN RELIEF	1
1	(NSS)	· SLEEVE	1
2	(NSS)	· VALVE	1
3	700-90-51320	· SPRING	1
4	(NSS)	· PLUG	1
5	700-90-51150	· PLUG	1
6	07000-22016	· O-RING	1
7	07001-02016	· RING, BACK-UP	1
8	700-80-61190	· POPPET	1
9	700-90-51160	· SPRING	1
10	700-80-51240	· SPACER	1
11	700-90-51290	· RETAINER	1
12	700-90-51270	· HOLDER	1
13	700-90-51190	· NUT	1
14	07002-03034	· O-RING	1
15	700-90-51281	· SCREW	1
16	01580-10806	· NUT	1
17	700-90-51311	· NUT	1
18	700-90-51290	· WASHER, SEAL	2
19	700-93-11320	· O-RING	1
20	700-93-11330	· RING, BACK-UP	1
21	07002-03634	· O-RING	1

FIG 10BHW320.006 SUCTION AND SAFETY VALVE

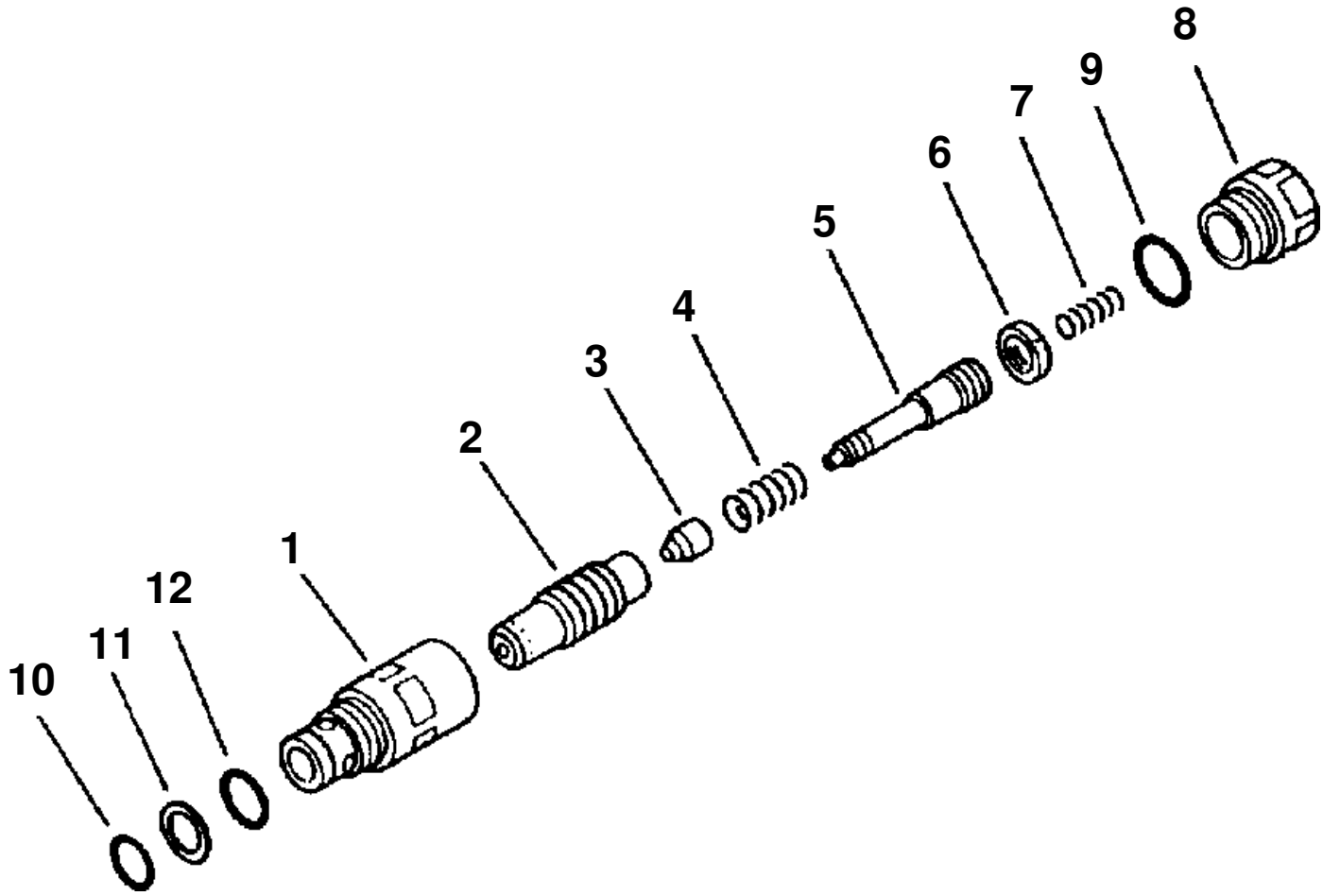

SUCTION AND SAFETY VALVE

ITEM NO.	PART NO.	DESCRIPTION	Q'TY
	700-90-76000	VALVE, SUCTION AND SAFETY	2
1	(NSS)	· SLEEVE	1
2	(NSS)	· VALVE	1
3	(NSS)	· POPPET	1
4	(NSS)	· SPRING	1
5	(NSS)	· PISTON	1
6	(NSS)	· NUT	1
7	700-90-61170	· SPRING	1
8	700-90-61180	· PLUG	1
9	07002-13634	· O-RING	1
10	700-93-11320	· O-RING	1
11	700-93-11330	· RING, BACK-UP	1
12	07002-03634	· O-RING	1

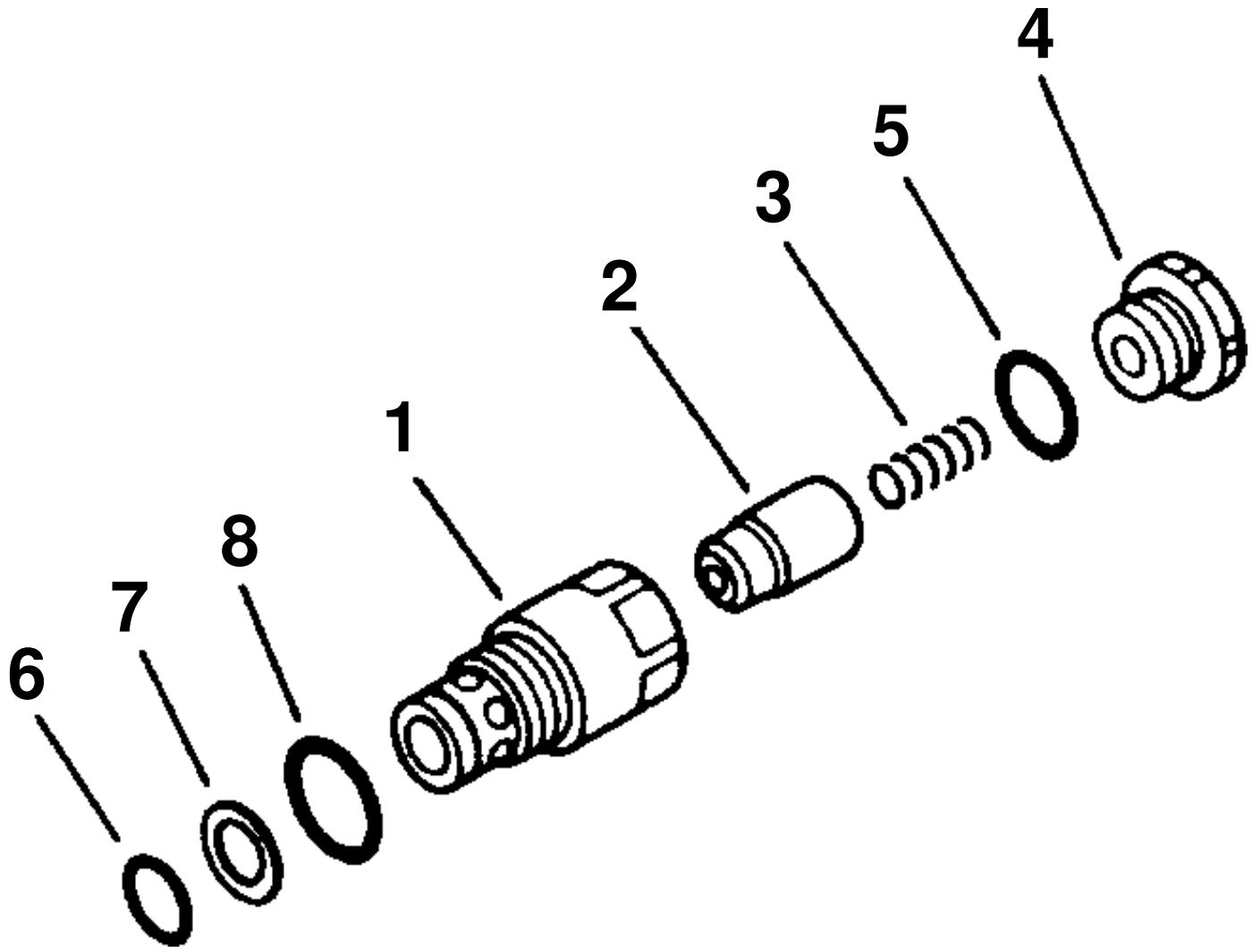
4
5
3
2
1
8
7
6

SUCTION VALVE

ITEM NO.	PART NO.	DESCRIPTION	Q'TY
	700-90-88000	VALVE ASSEMBLY, SUCTION	1
1	(NSS)	· SLEEVE	1
2	(NSS)	· VALVE	1
3	700-90-61170	· SPRING	1
4	700-90-62130	· PLUG	1
5	07002-13034	· O-RING	1
6	700-93-11320	· O-RING	1
7	700-93-11330	· RING, BACK-UP	1
8	07002-03634	· O-RING	1

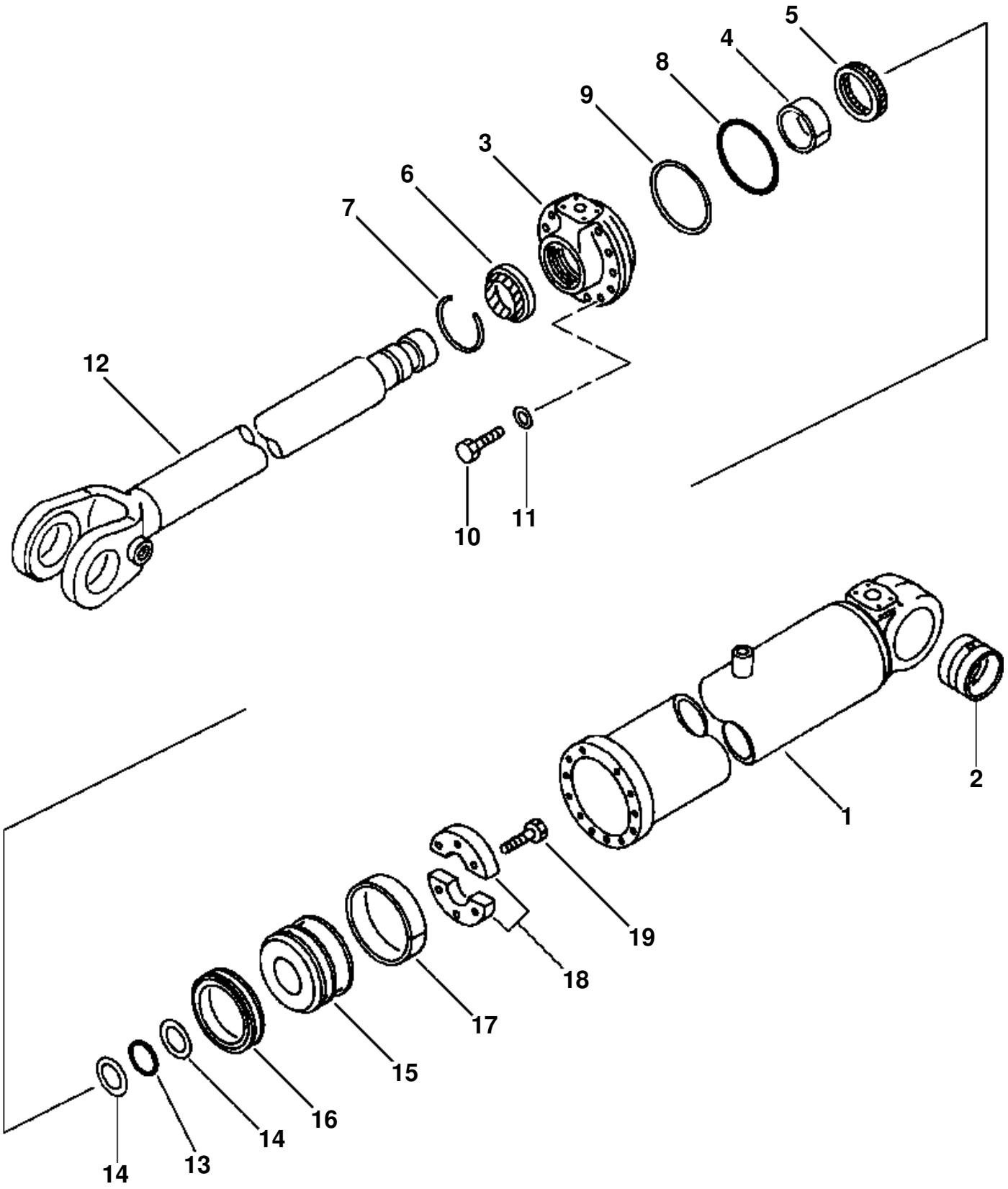
5
4
8
9
3
6
7
12
10
11
1
2
19
18
17
15
16
14
13
14

CYLINDER ASSEMBLY LIFT ARM

ITEM NO.	PART NO.	DESCRIPTION	Q'TY	REF
	707-01-03510	CYLINDER ASSEMBLY, LIFT ARM	2	F1
1	(NSS)	· CYLINDER	1	
2	707-76-75030	· BUSHING	1	
3	(NSS)	· HEAD, CYLINDER	1	
4	707-52-10750	· BUSHING	1	
5	707-51-75030	· PACKING, ROD	1	F2
6	144-63-94170	· SEAL, DUST	1	F2
7	07179-13089	· RING, SNAP	1	
8	07000-12135	· O-RING	1	F2
9	07146-02136	· RING, BACK-UP	1	F2
10	01010-81455	· BOLT	12	
11	01643-31445	· WASHER	12	
12	707-59-75020	· ROD, PISTON	1	
13	07000-12060	· O-RING	1	F2
14	707-35-52900	· RING, BACK-UP	2	F2
15	707-36-14210	· PISTON	1	
16	707-44-14180	· RING, PISTON	1	F2
17	07156-01417	· RING, WEAR	1	F2
18	707-40-16170	· SPACER	2	
19	01010-31240	· BOLT	6	
N/I	707-99-53100	SERVICE KIT, LIFT ARM CYLINDER	1	
		F1 - FOR MOUNTING HARDWARE, SEE LIFT ARM PG 07-000.		
		F2 - INCLUDED IN SERVICE KIT 707-99-53100.		

FIG 10BRW320.003 **DUMP CYLINDER**

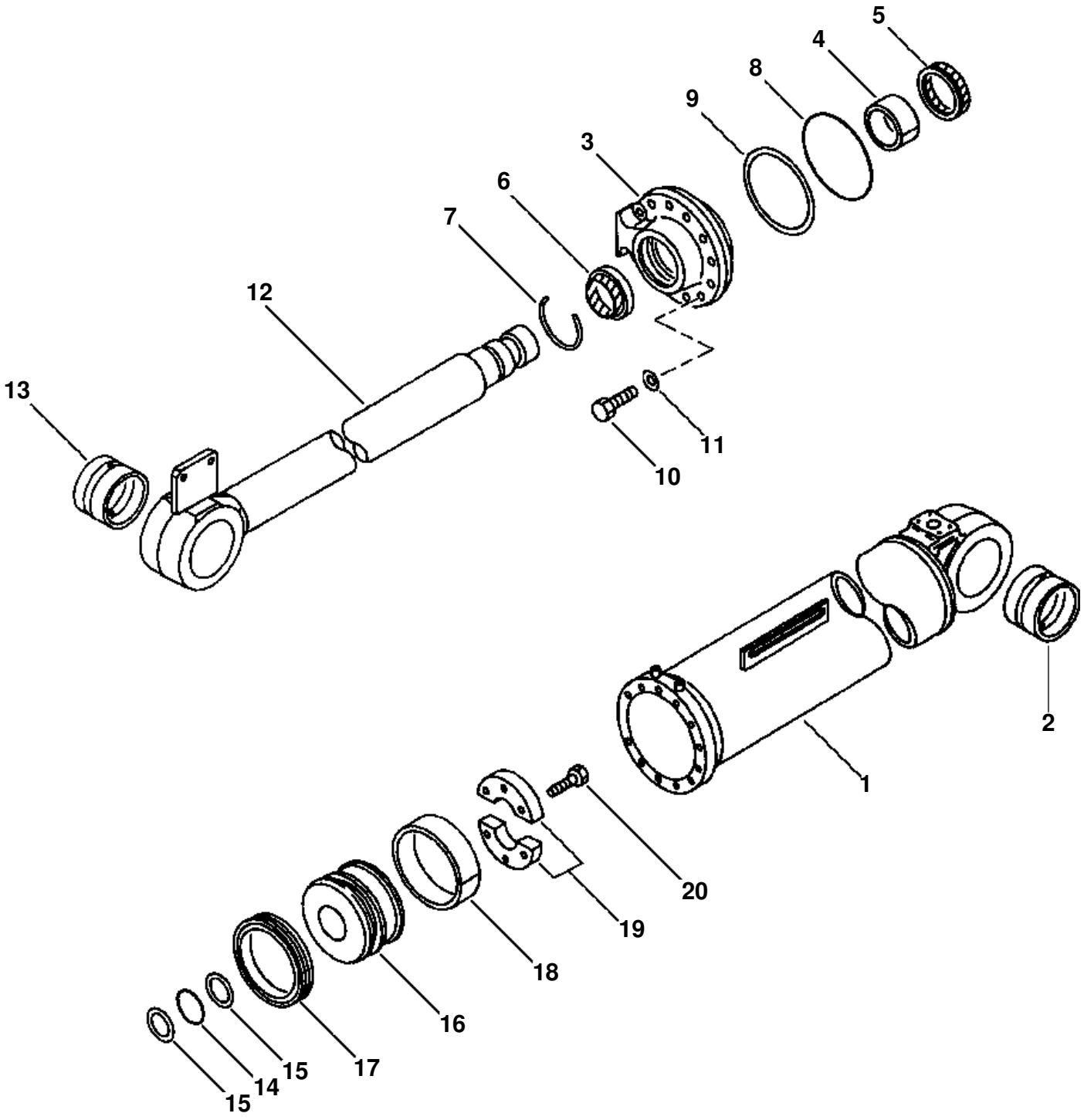

DUMP CYLINDER

ITEM NO.	PART NO.	DESCRIPTION	Q'TY
	707-01-03710	CYLINDER ASSEMBLY, DUMP	1
1	707-13-16370	· CYLINDER	1
2	707-76-95050	· BUSHING	1
3	707-27-16830	· HEAD, CYLINDER	1
4	07177-08040	· BUSHING	1
5	707-51-80030	· PACKING, ROD	1
6	07016-20808	· SEAL, DUST	1
7	07179-13094	· RING, SNAP	1
8	07000-15150	· O-RING	1
9	07146-05152	· RING, BACK-UP	1
10	01010-81660	· BOLT	12
11	01643-51645	· WASHER	12
12	707-58-80310	· ROD, PISTON	1
13	707-76-95050	· BUSHING	1
14	07000-12060	· O-RING	1
15	707-35-52900	· RING, BACK-UP	2
16	707-36-16400	· PISTON	1
17	707-44-16180	· RING, PISTON	1
18	07156-01620	· RING, WEAR	1
19	707-40-16170	· SPACER	2
20	01010-31240	· BOLT	6
N/I	421-09-11310	SEAL, DUST	4
	419-09-11250	FITTING	1

FIG 10ADW320.004 HYDRAULIC PIPING (TANK TO PUMP TO PRIORITY VALVE)

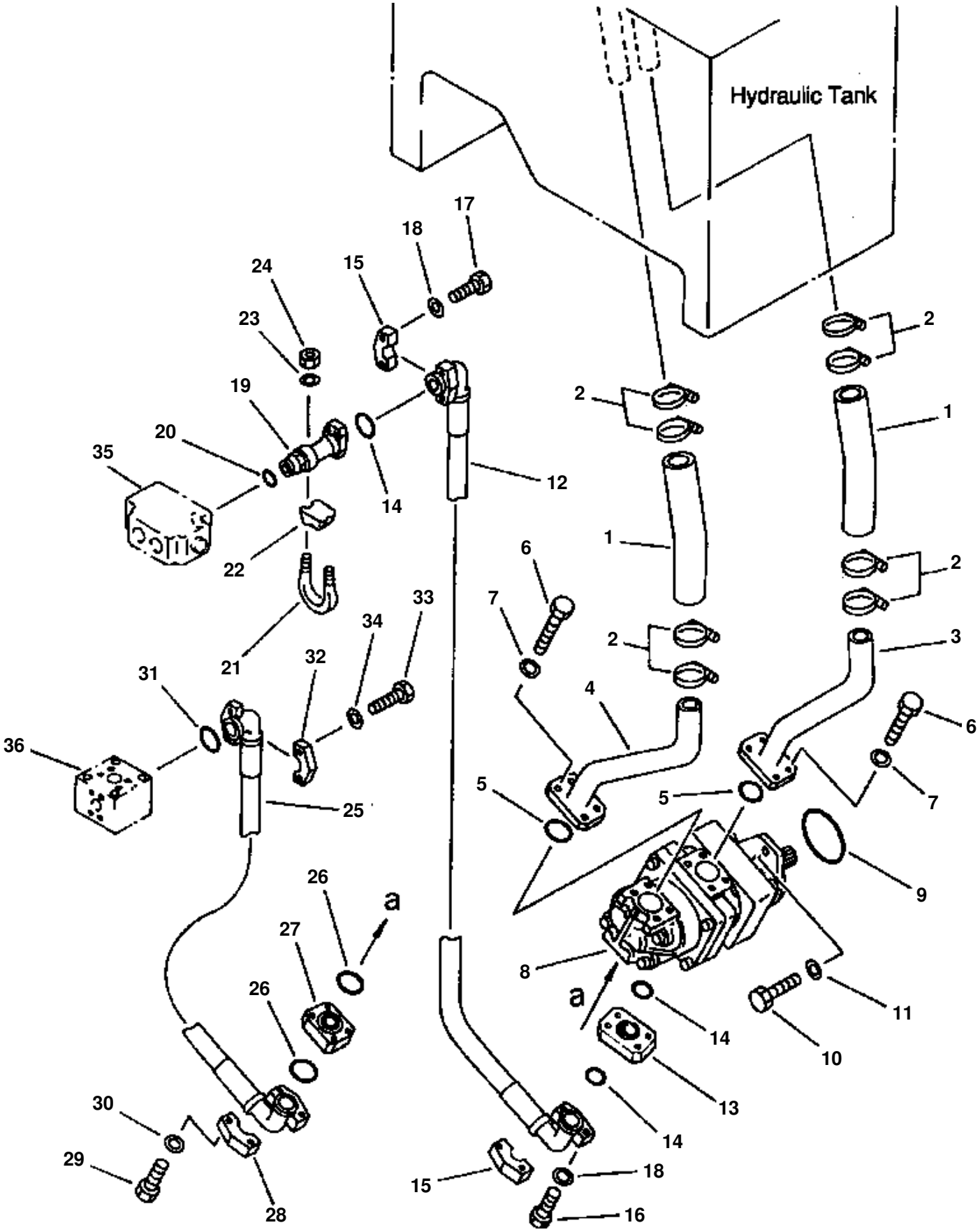

HYDRAULIC PIPING (TANK TO PUMP TO PRIORITY VALVE)

ITEM NO.	PART NO.	DESCRIPTION	Q'TY
1	07260-04140	HOSE	2
2	07281-00609	CLAMP, HOSE	2
3	419-62-11580	TUBE	1
4	419-62-11570	TUBE	1
5	07000-02060	O-RING	2
6	01010-51240	BOLT	8
7	01643-31232	WASHER	8
8		PUMP, LIFT / DUMP / STEERING (SEE PG 06-002)	
9	07000-02130	O-RING	1
10	01010-51645	BOLT	2
11	01643-31645	WASHER	2
12	419-62-11731	HOSE	1
13	07373-11000	FLANGE	1
14	07000-13032	O-RING	3
15	07371-31049	FLANGE, SPLIT	4
16	07372-21040	BOLT	4
17	07372-21035	BOLT	4
18	01643-51032	WASHER	8
19	418-62-13890	TUBE	1
20	418-62-11630	O-RING	1
21	07283-23450	U-BOLT	1
22	07283-53444	SEAT	1
23	01643-31032	WASHER	2
24	01599-01011	NUT	2
25	419-62-11740	HOSE	1
26	07000-13032	O-RING	2
27	07373-11000	SPACER	1
28	07371-31049	FLANGE, SPLIT	2
29	07372-21040	BOLT	4
30	01643-51032	WASHER	4
31	07000-13025	O-RING	1
32	07371-30638	FLANGE, SPLIT	2
33	01010-50830	BOLT	4
34	01643-50823	WASHER	4
35		PRIORITY VALVE (SEE PG 03-050)	
36		BLOCK (SEE PG 06-030)	

FIG 10ADW320.005 HYDRAULIC PIPING (PRIORITY VALVE TO CONTROL VALVE)

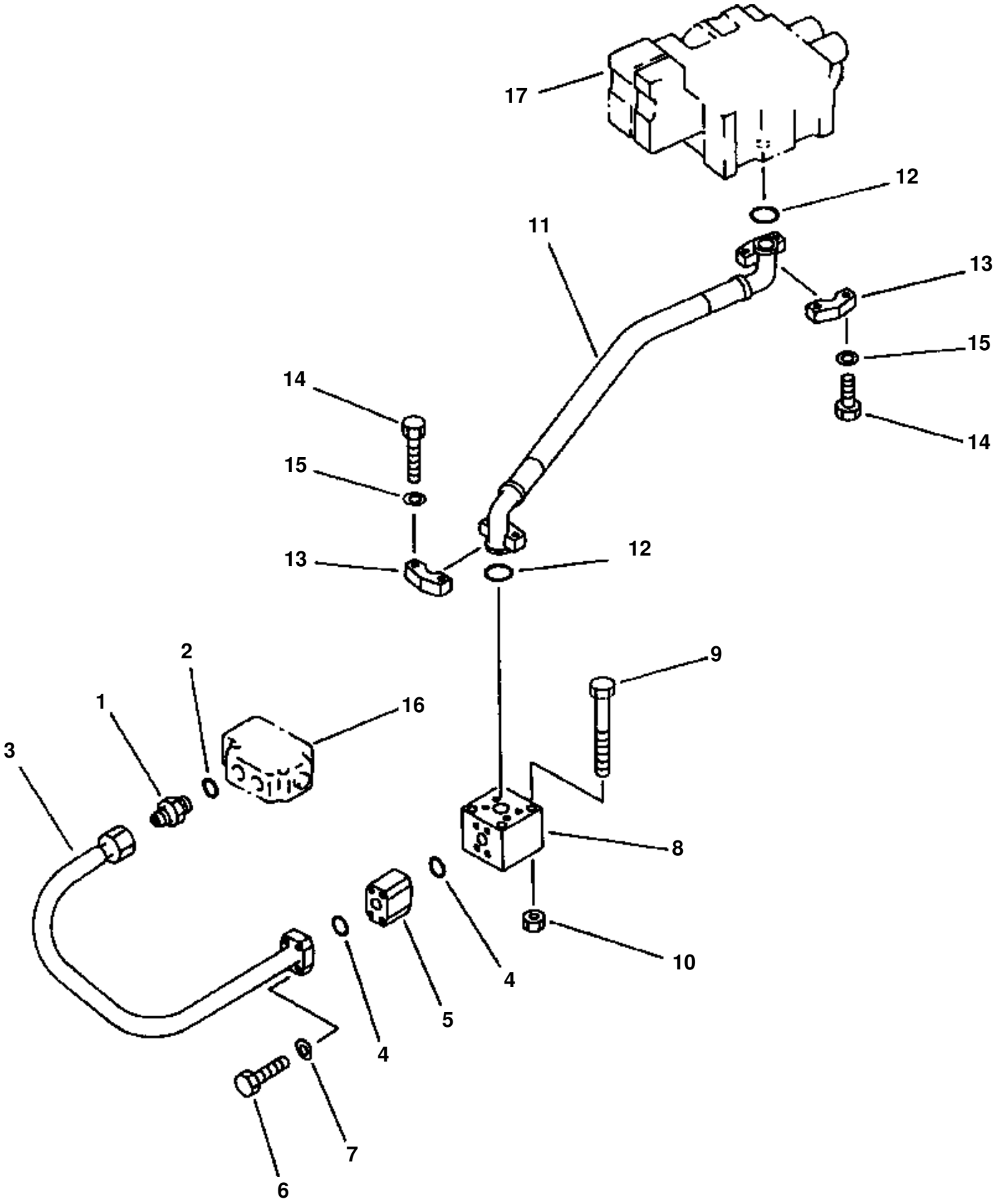

HYDRAULIC PIPING (PRIORITY VALVE TO CONTROL VALVE)

ITEM NO.	PART NO.	DESCRIPTION	Q'TY
1	418-62-13910	UNION	1
2	418-62-11630	O-RING	1
3	419-62-11770	TUBE	1
4	07000-13035	O-RING	2
5	702-13-23902	VALVE ASSEMBLY, CHECK	1
6	01011-51010	BOLT	4
7	01643-31032	WASHER	4
8	418-62-13930	BLOCK	1
9	01436-01010	BOLT	4
10	01584-01008	NUT	4
11	419-62-11750	HOSE	1
12	07000-13038	O-RING	2
13	07371-31255	FLANGE, SPLIT	4
14	07372-21035	BOLT	8
15	01643-51032	WASHER	8
16		PRIORITY VALVE (SEE PG 04-004)	
17		CONTROL VALVE (SEE PG 06-014)	

FIG 10ADW320.006 HYDRAULIC PIPING (CONTROL VALVE TO LIFT CYLINDERS)

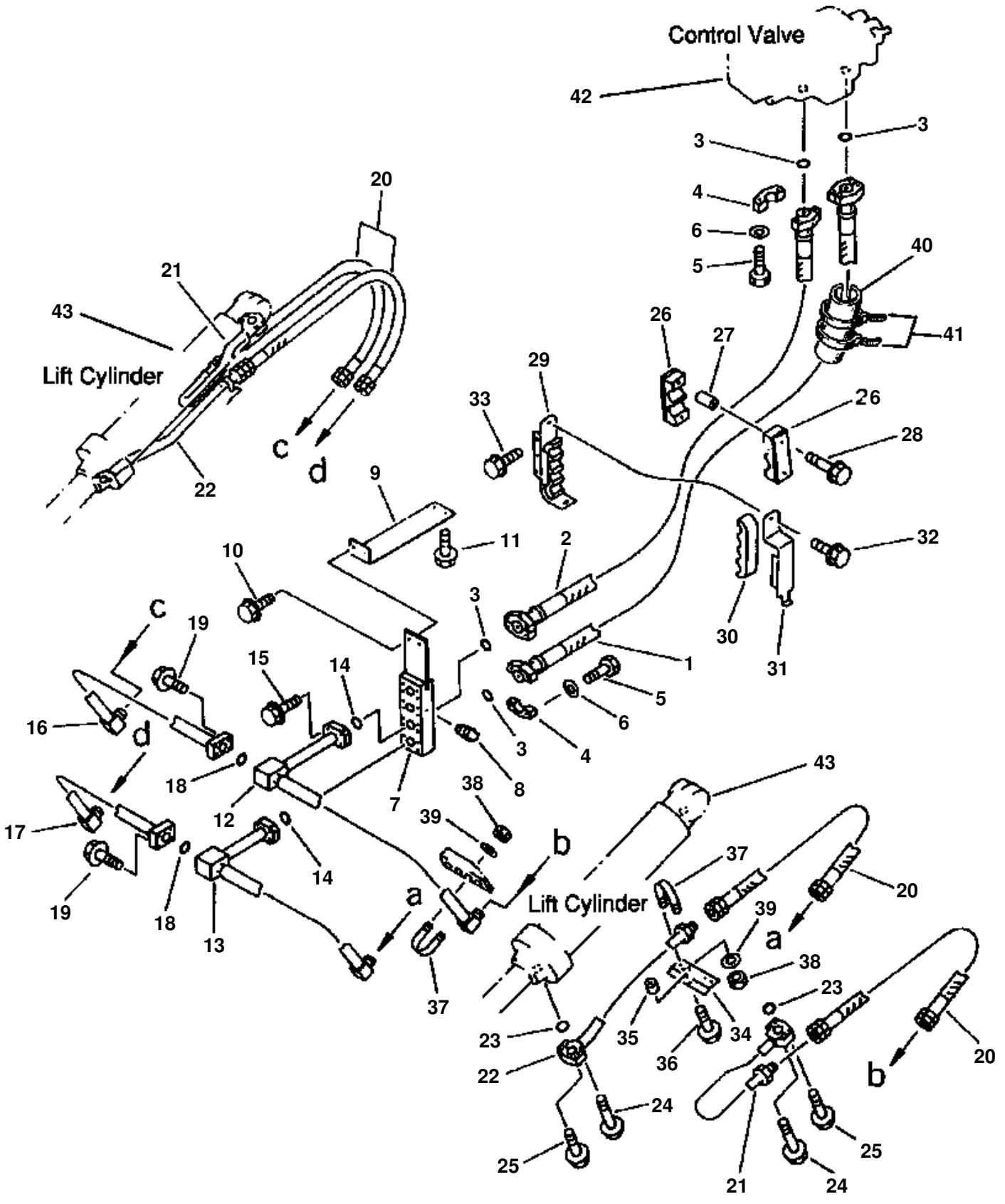

HYDRAULIC PIPING (CONTROL VALVE TO LIFT CYLINDERS)

ITEM NO.	PART NO.	DESCRIPTION	Q'TY
1	419-62-13950	HOSE	1
2	419-62-13940	HOSE	1
3	07000-13032	O-RING	6
4	07371-31049	FLANGE, SPLIT	8
5	07372-21035	BOLT	16
6	01643-51032	WASHER	16
7	419-62-13291	BLOCK	1
8	07042-20108	PLUG	1
9	419-62-13830	BRACKET	1
10	01435-01235	BOLT	2
11	01435-01240	BOLT	3
12	419-62-13322	TUBE	1
N/I	205-62-52520	· FLANGE	1
13	419-62-13312	TUBE	1
N/I	205-62-52520	· FLANGE	1
14	07000-13035	O-RING	2
15	01435-01040	BOLT	8
16	419-62-13352	TUBE	1
N/I	419-09-11230	· FLANGE	1
17	419-62-13342	TUBE	1
N/I	419-09-11230	· FLANGE	1
18	07000-13030	O-RING	2
19	01435-00830	BOLT	8
20	419-62-13790	HOSE	4
21	419-62-13361	TUBE, LH	1
	419-62-13810	TUBE, RH	1
22	419-62-13891	TUBE, LH	1
	419-62-13911	TUBE, RH	1
23	07000-13035	O-RING	4
24	01435-01055	BOLT	8
25	01435-01045	BOLT	8
26	419-62-13960	CLAMP	2
27	419-62-13680	SPACER	2
28	01435-01290	BOLT	2
29	419-62-13741	BRACKET	1
30	419-62-13760	RUBBER	1
31	419-62-13751	BRACKET	1
N/I	419-62-13760	· RUBBER	1
	01435-01230	· BOLT	1
32	01435-01230	BOLT	1
33	01435-01230	BOLT	3
34	419-62-13380	PLATE	2
35	419-62-13390	SPACER	2
36	01435-01250	BOLT	2
37	07283-22738	U-BOLT	8
38	01599-01011	NUT	16
39	01643-31032	WASHER	16
40	205-625-3780	PROTECTOR, CHAFING	1
41	08034-00823	STRAP, TIE	2
42		VALVE, CONTROL (SEE PG 06-014)	
43		CYLINDER, LIFT (SEE PG 06-024)	

FIG 10ADW320.007 HYDRAULIC PIPING (CONTROL VALVE TO DUMP CYLINDER)

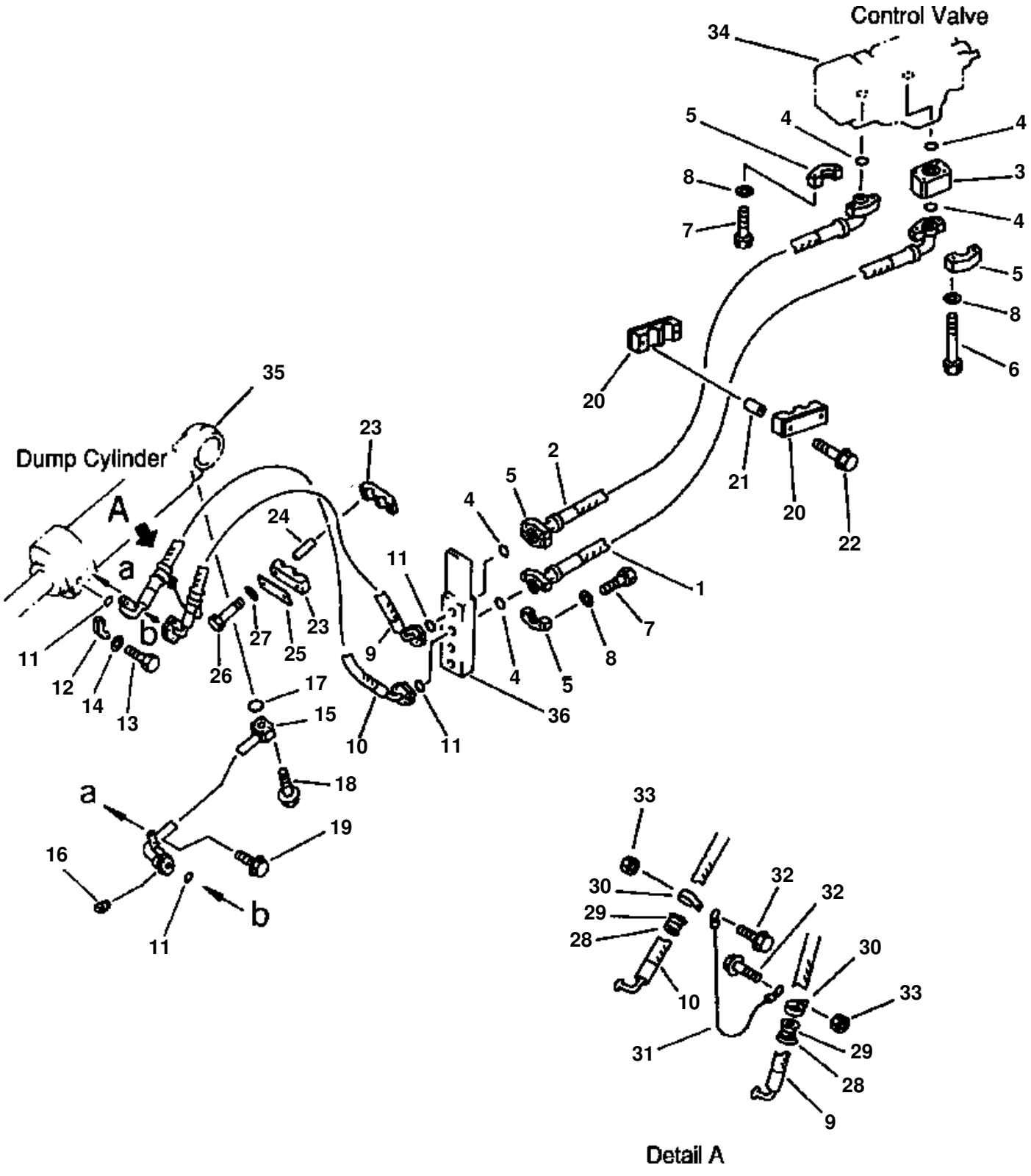

HYDRAULIC PIPING (CONTROL VALVE TO DUMP CYLINDER)

ITEM NO.	PART NO.	DESCRIPTION	Q'TY
1	419-62-13930	HOSE	1
2	419-62-13920	HOSE	1
3	419-62-13210	FLANGE	1
4	07000-13032	O-RING	5
5	07371-31049	FLANGE, SPLIT	8
6	01010-51080	BOLT	4
7	07372-21035	BOLT	12
8	01643-51032	WASHER	16
9	419-62-13410	HOSE	1
10	419-62-13650	HOSE	1
11	07000-13032	O-RING	4
12	07371-31049	FLANGE, SPLIT	8
13	07372-01035	BOLT	16
14	01643-51032	WASHER	16
15	419-62-13451	TUBE	1
16	07042-20108	PLUG	1
17	07000-13035	O-RING	1
18	01435-01055	BOLT	4
19	01435-01020	BOLT	2
20	419-62-13960	CLAMP	2
21	419-62-13680	SPACER	2
22	01435-01290	BOLT	2
23	419-62-13421	RUBBER	2
24	419-62-13440	SPACER	2
25	419-62-13431	PLATE	1
26	01011-31205	BOLT	2
27	01643-31232	WASHER	2
28	419-62-13470	RUBBER	2
29	419-09-11310	SHEET	2
30	419-09-11150	CLIP	2
31	419-62-13460	WIRE	1
32	01435-01225	BOLT	2
33	01584-01210	NUT	2
34	700-92-14002	VALVE, CONTROL (SEE PG 06-014)	
35	707-01-03710	CYLINDER, DUMP (SEE PG 06-026)	
36	419-62-13291	BLOCK (SEE PG 06-030)	

FIG 10ADW320.008 HYDRAULIC PIPING (CONTROL VALVE TO TANK - RETURN LINE)

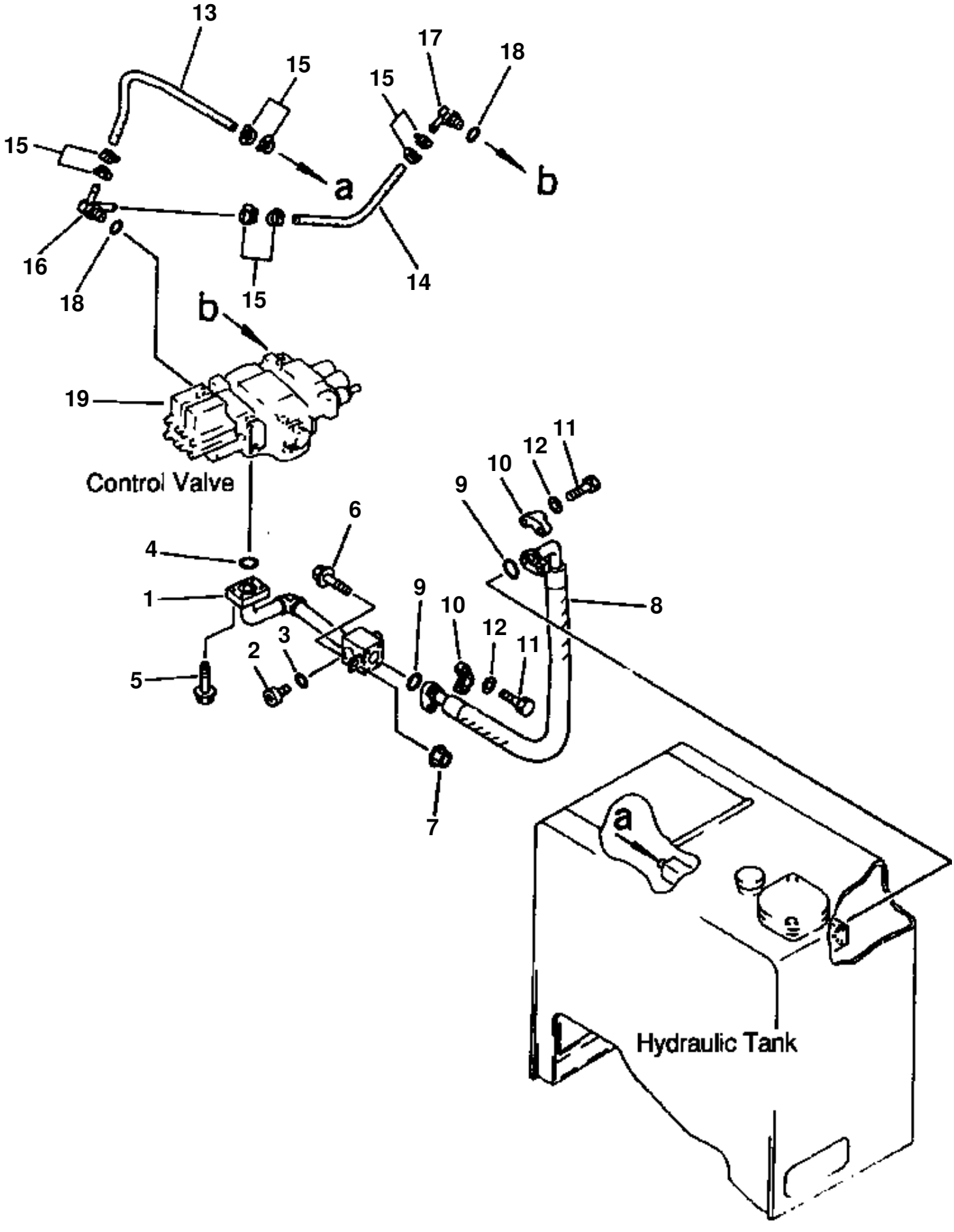

HYDRAULIC PIPING (CONTROL VALVE TO TANK - RETURN LINE)

ITEM NO.	PART NO.	DESCRIPTION	Q'TY
1	419-62-13550	TUBE	1
2	07040-12414	PLUG	1
3	07002-12434	O-RING	1
4	07000-13035	O-RING	1
5	01435-01040	BOLT	4
6	01435-01025	BOLT	1
7	01584-01008	NUT	1
8	419-62-13180	HOSE	1
9	07000-13038	O-RING	2
10	07371-31255	FLANGE, SPLIT	4
11	07372-21035	BOLT	8
12	01643-51032	WASHER	8
13	07260-20956	HOSE	1
14	07260-20922	HOSE	1
15	07281-00197	CLAMP, HOSE	8
16	419-62-13590	ELBOW	1
17	419-62-13610	ELBOW	1
18	07002-12434	O-RING	2
19	700-92-14002	VALVE, CONTROL (SEE PG 06-014)	

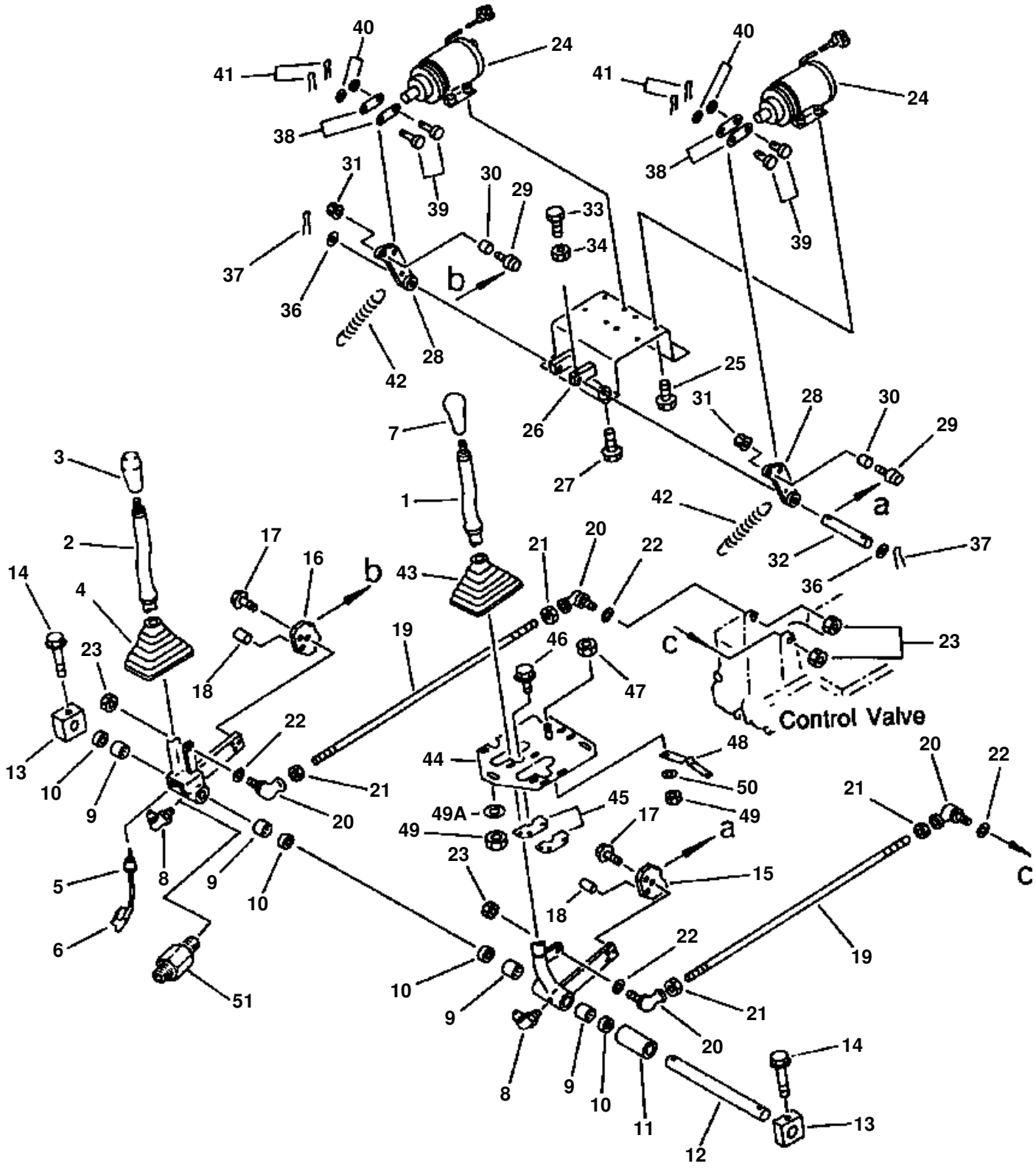
Control Valve

WORK EQUIPMENT CONTROL LEVERS

ITEM NO.	PART NO.	DESCRIPTION	Q'TY
1	419-43-18122	LEVER, BUCKET	1
	424-43-18120	· ROD	1
2	419-43-18350	LEVER ASSEMBLY, LIFT ARM	1
	419-43-18360	· LEVER	1
	419-43-18370	· · ROD	1
3	421-06-15510	· SWITCH, KICK DOWN	1
	421-06-15520	· · SWITCH	1
	421-06-15550	· · BODY	1
	421-06-15530	· · COVER	1
	421-06-15540	· · SCREW	1
4	419-43-18160	· BOOT	1
5	419-43-18380	· GROMMET	1
6	08027-11210	· CONNECTOR	1
7	113-43-23420	KNOB	1
8	07020-00900	FITTING, GREASE	2
9	06120-02016	BEARING	4
10	06122-02004	SEAL, BEARING	4
11	419-43-18130	SPACER	1
12	419-43-18140	PIN	1
13	419-43-18150	PLATE	2
14	01435-01070	BOLT	2
15	419-43-18272	PLATE	1
16	419-43-18262	PLATE	1
17	01435-00825	BOLT	2
18	04020-00616	PIN, DOWEL	4
19	419-43-18170	ROD	2
20	424-09-12440	JOINT, BALL	4
21	01582-11008	NUT	4
22	01643-31032	WASHER	4
23	426-09-11160	NUT, LOCK	4
24	421-06-11542	SOLENOID	2
	421-06-11470	· BOOT	1
	421-09-11520	· CONNECTOR	1
	421-09-11550	· TERMINAL	1
	08023-06012	· TUBE	1
25	01435-00616	BOLT	8
26	419-43-18223	SUPPORT	1
27	01435-01020	BOLT	4
28	419-43-18182	LINK	2
29	421-43-18711	BEARING	2
30	419-43-18281	SPACER	2
31	426-09-11130	NUT, LOCK	2
32	419-43-18311	PIN	1
33	01010-50625	BOLT	1
34	01580-10605	NUT	1
36	01641-21223	WASHER	2
37	04050-13022	PIN, COTTER	2
38	424-43-18572	PLATE	4
39	04205-10620	PIN	4
40	01641-20608	WASHER	4
41	04050-11612	PIN, COTTER	4
42	234-885-1690	SPRING	2
43	419-43-18160	BOOT	1
44	419-43-18340	PLATE	1
45	419-43-18330	PLATE	2
46	01435-00616	BOLT	6
47	424-43-18620	KNOB	1
48	424-43-18610	SPRING	1
49	01580-10605	NUT	3
49A	01643-30623	WASHER	3
50	01641-20812	WASHER	1
51	423-70-11160	NIPPLE	1

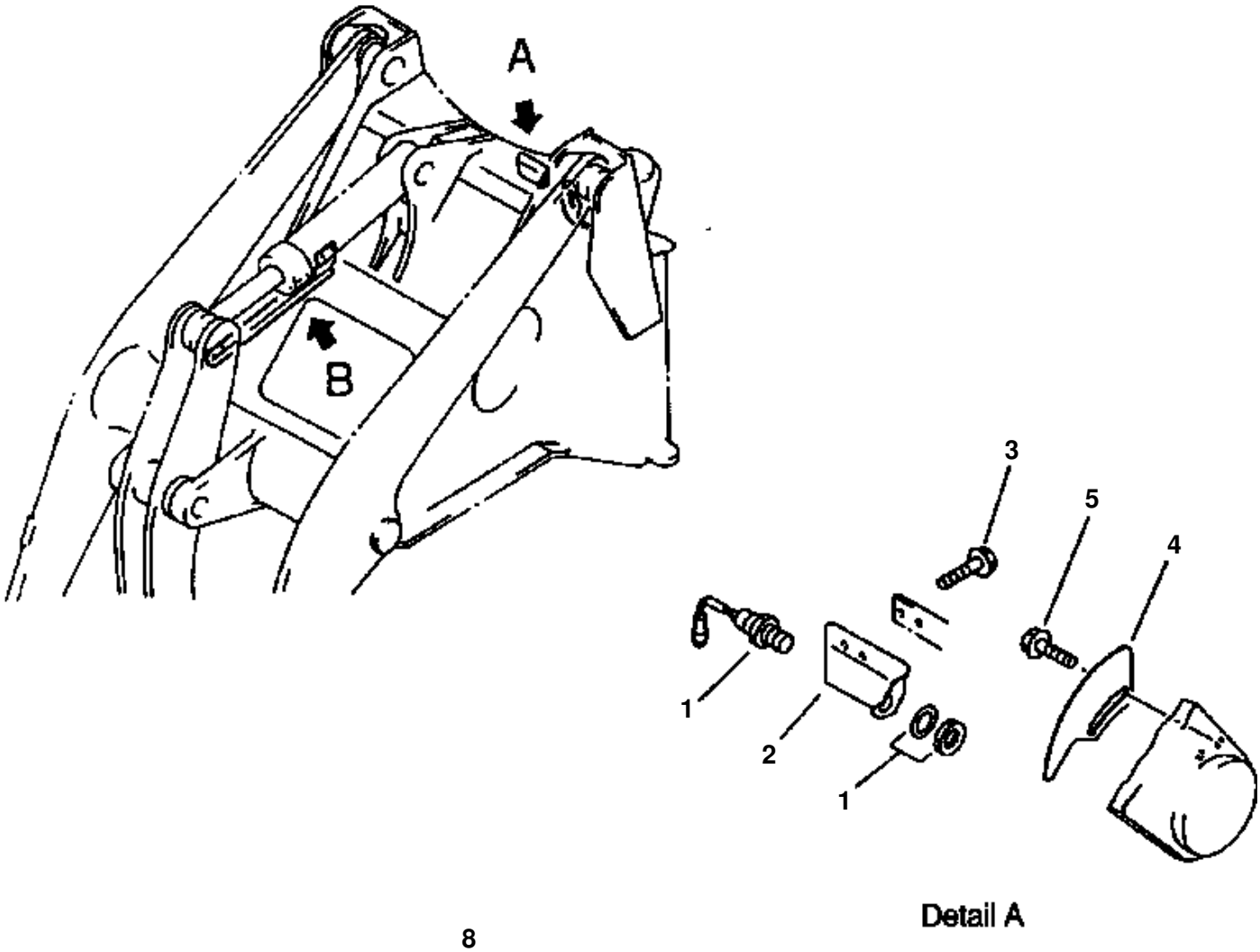

Detail A

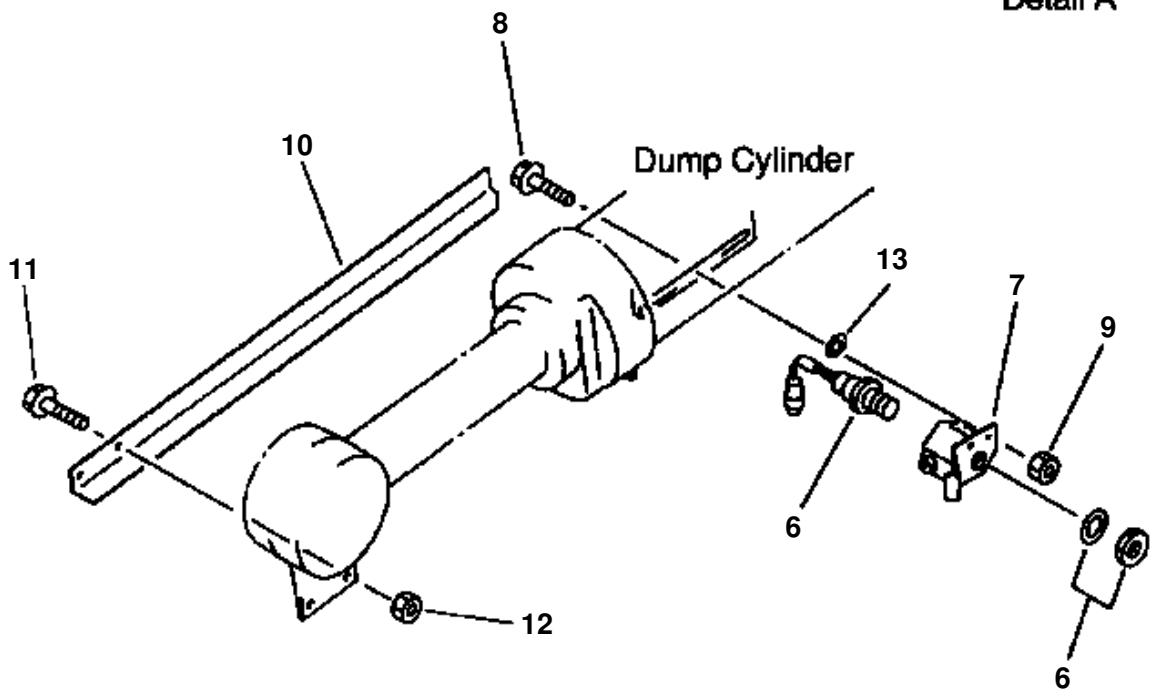

Detail B

BOOM-KICK OUT AND BUCKET POSITIONER

ITEM NO.	PART NO.	DESCRIPTION	Q'TY
1	421-06-11166	SWITCH, BOOM KICK-OUT	1
2	418-43-19121	SUPPORT	1
3	01435-01225	BOLT	2
4	419-43-19111	PLATE	1
5	01435-01220	BOLT	2
6	421-06-11166	SWITCH, BUCKET POSITIONER	1
7	419-43-19131	PLATE	1
8	01435-01230	BOLT	2
9	01584-01210	NUT	2
10	419-43-19120	PLATE	1
11	01435-01240	BOLT	2
12	01584-01210	NUT	2
13	01642-21216	WASHER	2
	01643-31232	WASHER	2

WORK EQUIPMENT

DESCRIPTION
LIFT ARM
BELLCRANK
LOOSE MATERIAL BUCKET (2.5 CUBIC METER)
GENERAL PURPOSE AND EXCAVATING BUCKET 2.75 YDS
EXCAVATING BUCKET W/BOLT ON CUTTING EDGE 4.0 CUBIC YARDS
BOLT-ON BUCKET TEETH (KOMATSU)
BOLT-ON BUCKET TEETH (ESCO)
BOLT-ON CUTTING EDGE

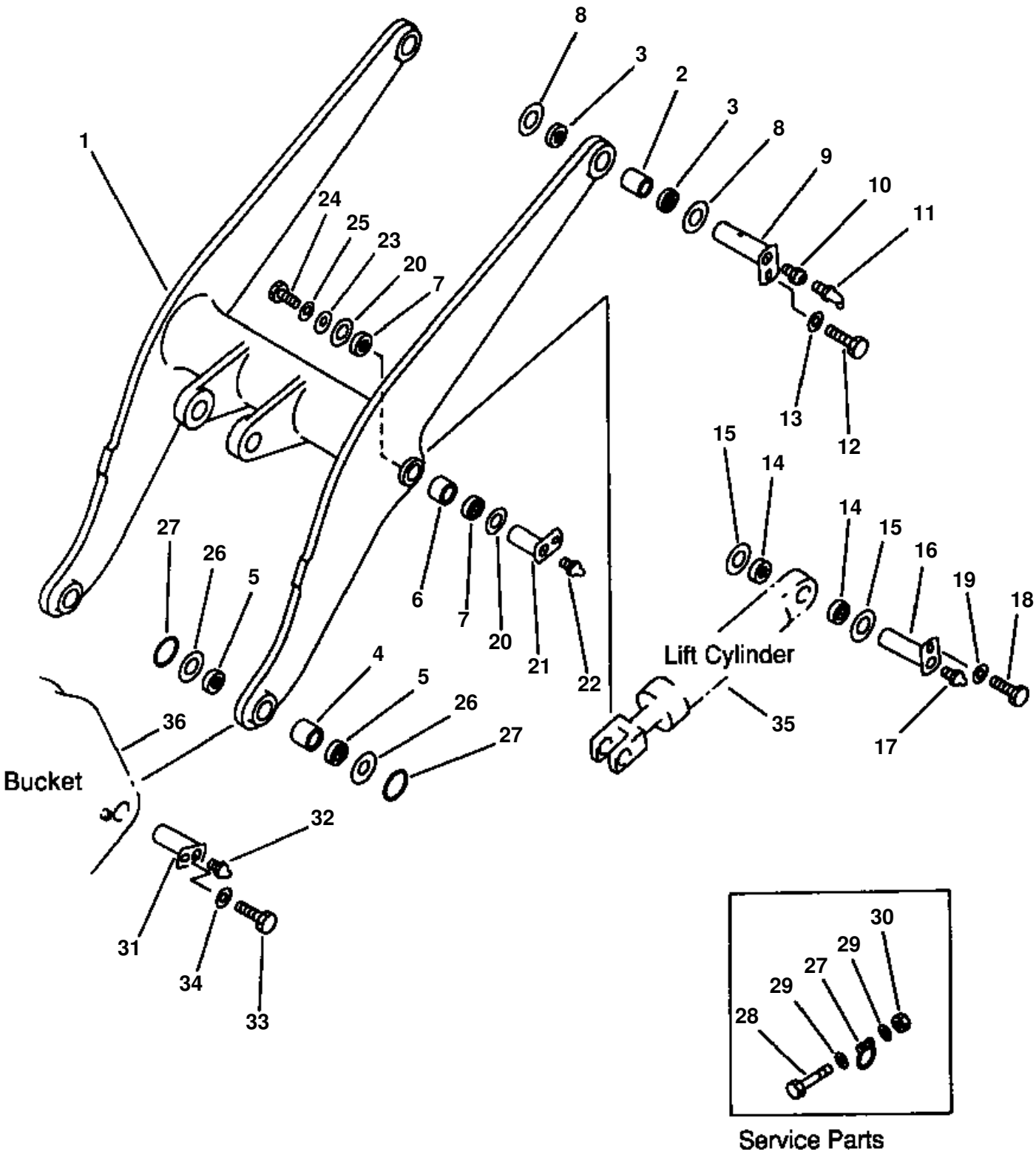
1
8
3
2
3
8
9
10
11
24
25
23
20
7
13
12
15
14
14
15
16
19
18
27
26
5
6
7
20
21
22
Lift Cylinder
4
5
26
27
36
35
17
Bucket
32
31
34
33
30
29
27
29
28
Service Parts

LIFT ARM

ITEM NO.	PART NO.	DESCRIPTION	Q'TY
1	419-70-00050	ARM ASSEMBLY, LIFT	1
	(NSS)	· ARM, LIFT	1
2	419-70-11890	· BUSHING	2
3	424-09-12320	· SEAL, DUST	4
4	419-70-11810	· BUSHING	2
5	419-09-11110	· SEAL, DUST	4
6	419-70-11871	· BUSHING	2
7	419-09-11110	· SEAL, DUST	4
8	419-70-11460	SHIM, 1.5mm	2
	419-70-11470	SHIM, 3.0mm	2
9	419-70-11790	PIN	2
10	423-70-11160	NIPPLE	2
11	07020-00675	FITTING, GREASE	2
12	01010-51625	BOLT	2
13	421-70-11280	WASHER	2
14	419-09-11110	SEAL, DUST	4
15	419-70-11440	SHIM, 1.5mm	2
	419-70-11450	SHIM, 3.0mm	2
16	419-70-11981	PIN	2
17	07020-00000	FITTING, GREASE	2
18	01010-51625	BOLT	2
19	421-70-11280	WASHER	2
20	419-70-11420	SHIM, 1.5mm	4
21	419-70-11971	PIN	2
22	07020-00000	FITTING, GREASE	2
23	419-70-11340	PLATE	2
24	01010-51630	BOLT	2
25	01643-31645	WASHER	2
26	419-70-11420	SHIM, 1.5mm	2
	419-70-11430	SHIM, 3.0mm	2
27	419-70-11410	O-RING (SERVICE PARTS)	4
28	419-70-11490	BOLT (SERVICE PARTS)	4
29	01641-20608	WASHER (SERVICE PARTS)	8
30	426-09-11130	NUT (SERVICE PARTS)	4
31	419-70-11911	PIN	2
32	07020-00000	FITTING, GREASE	2
33	01010-51625	BOLT	2
34	421-70-11280	WASHER	2
35		CYLINDER, LIFT (SEE PG 06-024)	
36		BUCKET (SEE PG 07-008)	
N/I	419-70-11480	O-RING	8

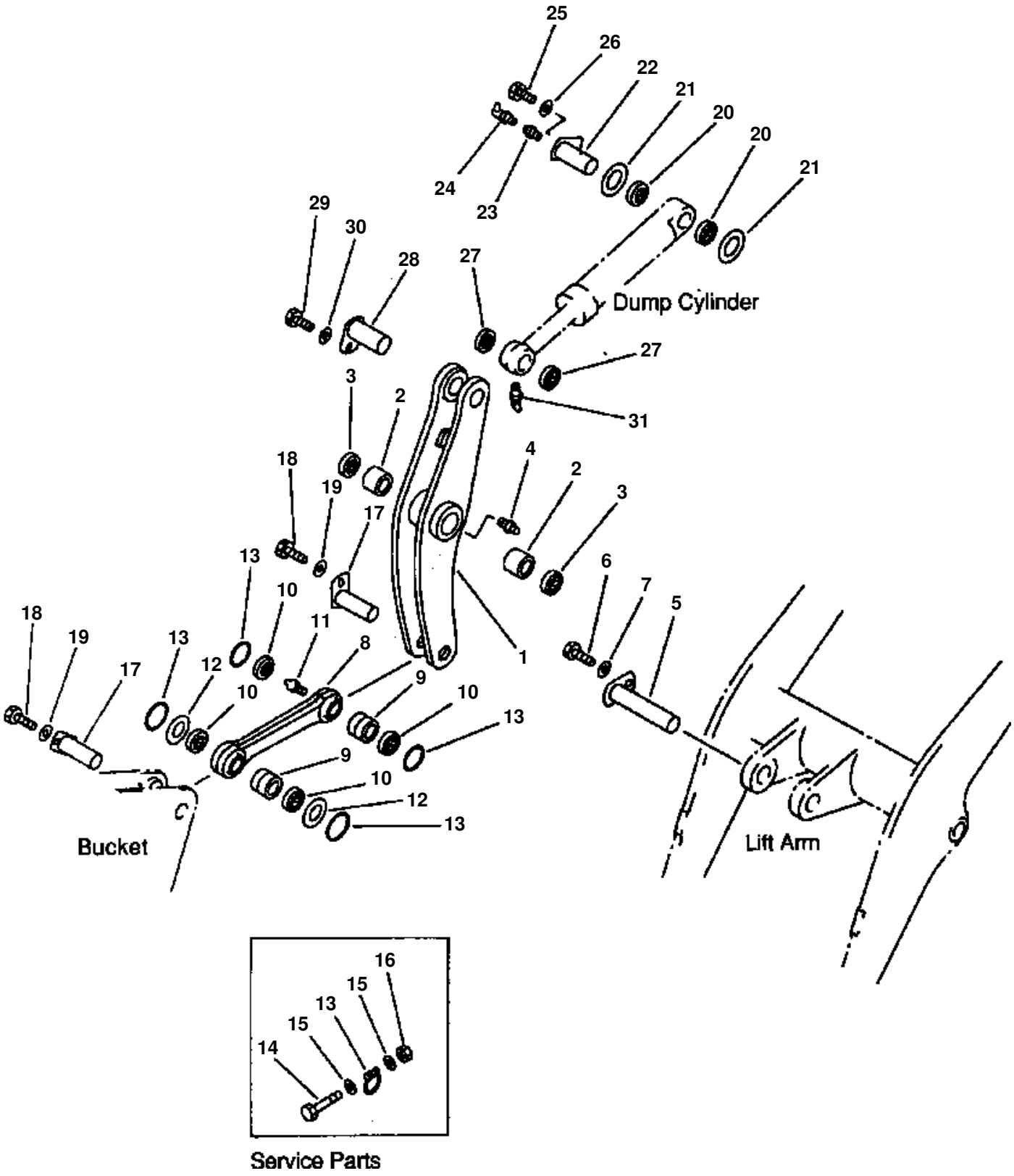
25
26
22
21
20
20
21
24
23
29
30
28
27
Dump Cylinder
27
31
3
2
18
19
17
4
2
3
13
10
11
6
7
5
18
19
13
17
12
10
8
1
9
10
13
9
10
12
13
Bucket
Lift Arm
16
15
13
15
14
Service Parts

BELLCRANK

ITEM NO.	PART NO.	DESCRIPTION	Q'TY
1	419-70-00023	BELLCRANK ASSEMBLY	1
	419-70-11135	· BELLCRANK	1
2	424-70-11870	· BUSHING	2
3	421-09-11310	· SEAL, DUST	2
4	07020-00000	· FITTING, GREASE	1
5	419-70-11960	PIN	1
6	01010-51625	BOLT	1
7	421-70-11280	WASHER	1
8	419-70-00130	LINK ASSEMBLY	1
	419-70-11740	· LINK	1
9	419-70-11820	· BUSHING	2
10	419-09-11110	· SEAL, DUST	4
11	07020-00000	· FITTING, GREASE	2
12	419-70-11420	SHIM, 1.5mm	1
	419-70-11430	SHIM, 3.0mm	1
13	419-70-11410	O-RING (SERVICE PARTS)	4
14	419-70-11490	BOLT (SERVICE PARTS)	4
15	01641-20608	WASHER (SERVICE PARTS)	8
16	426-09-11130	NUT (SERVICE PARTS)	4
17	419-70-11922	PIN	2
18	01010-51625	BOLT	2
19	421-70-11280	WASHER	2
20	421-09-11310	SEAL, DUST	2
21	423-70-11780	SHIM, 1.5mm	1
	423-70-11880	SHIM, 3.0mm	1
22	419-70-11950	PIN	1
23	423-70-11160	NIPPLE	1
24	07020-00900	FITTING, GREASE	1
25	01010-51625	BOLT	1
26	421-70-11280	WASHER	1
27	421-09-11310	SEAL, DUST	2
28	419-70-11941	PIN	1
29	01010-51625	BOLT	1
30	421-70-11280	WASHER	1
31	419-09-11250	FITTING, GREASE	1

FIG 17CZW320.001 LOOSE MATERIAL BUCKET (2.5 CUBIC METER)

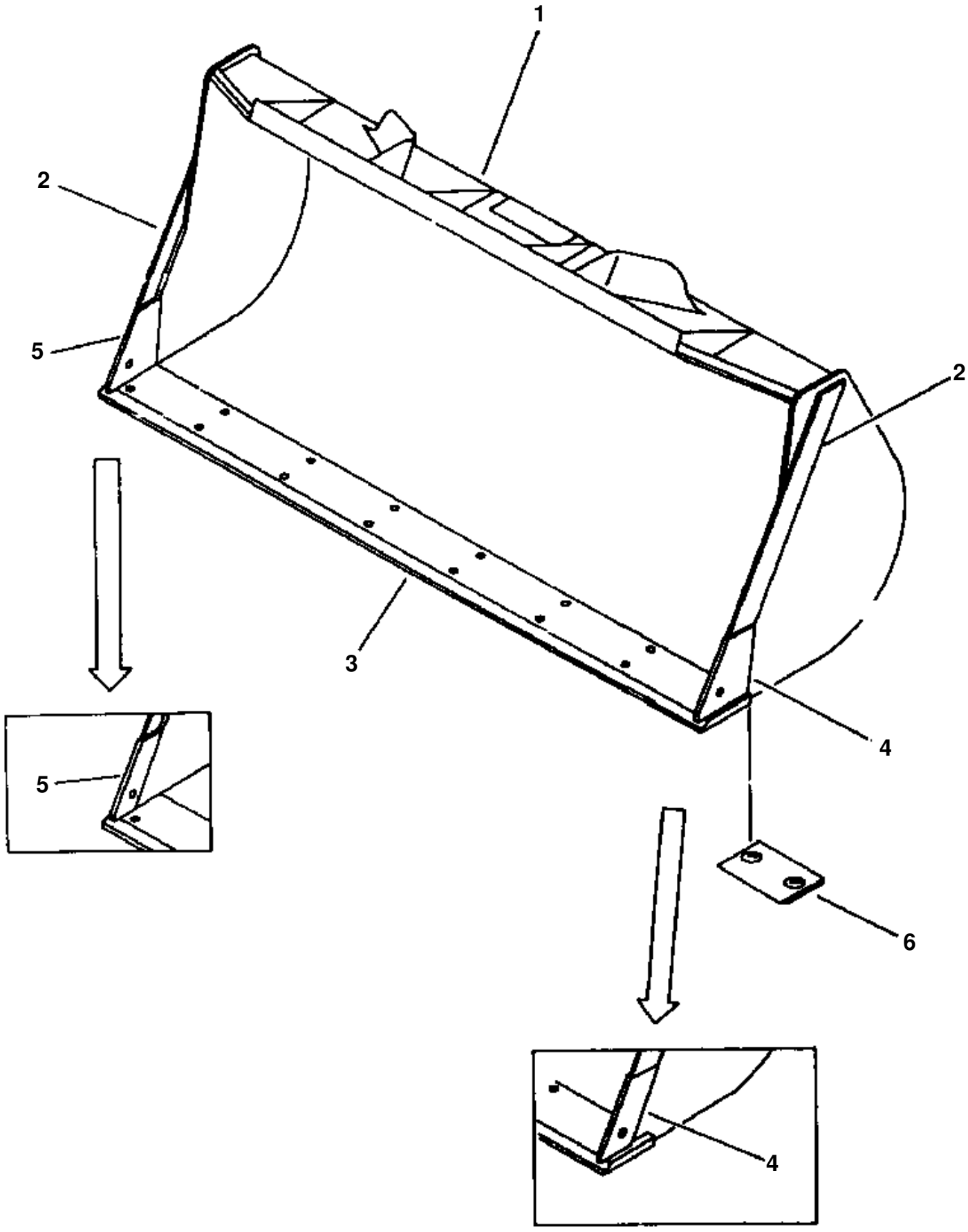

LOOSE MATERIAL BUCKET (2.5 CUBIC METER)

ITEM NO.	PART NO.	DESCRIPTION	Q'TY
1	419-70-12201	BUCKET, LOOSE MATERIAL 2.5 CUBIC METER	1
2	419-70-12231	· SIDE CUTTER	2
3	419-70-12221	· BLADE, CUTTING	1
4	419-70-12154	· CORNER, LH	1
5	419-70-12164	· CORNER, RH	1
6	419-70-12142	· SKID, WEAR PLATE	2

FIG 17CZW320.002 GENERAL PURPOSE AND EXCAVATING BUCKET 2.75 YDS

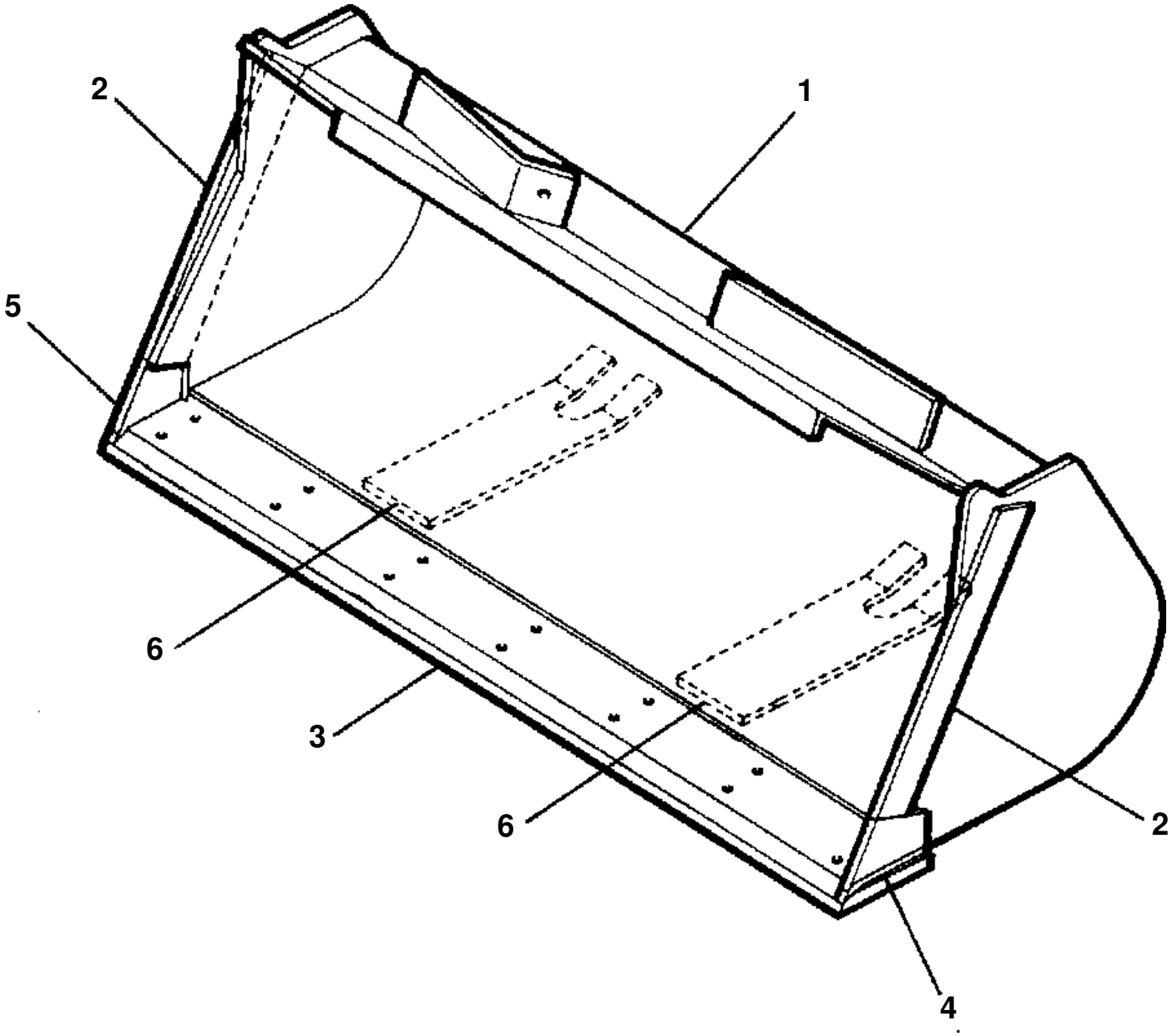

GENERAL PURPOSE AND EXCAVATING BUCKET 2.75 YDS

ITEM NO.	PART NO.	DESCRIPTION	Q'TY
	419-806-1210	BUCKET 2.75 CUBIC YARD	1
1	(NSS)	・ BUCKET	1
2	419-70-12231	・・ SIDE CUTTER	2
3	419-70-12221	・・ BLADE CUTTING	1
4	418-70-12431	・・ CORNER, LH	1
5	418-70-12441	・・ CORNER, RH	1
6	419-70-12141	・・ SKID, WEAR PLATE	2
		NOTE: EXCAVATING BUCKET HAS BOLT ON TEETH.	
		SEE PG 07-017 FIGURE 7402	

FIG 17CZW320.003 EXCAVATING BUCKET W/BOLT ON CUTTING EDGE 4.0 CUBIC YARDS

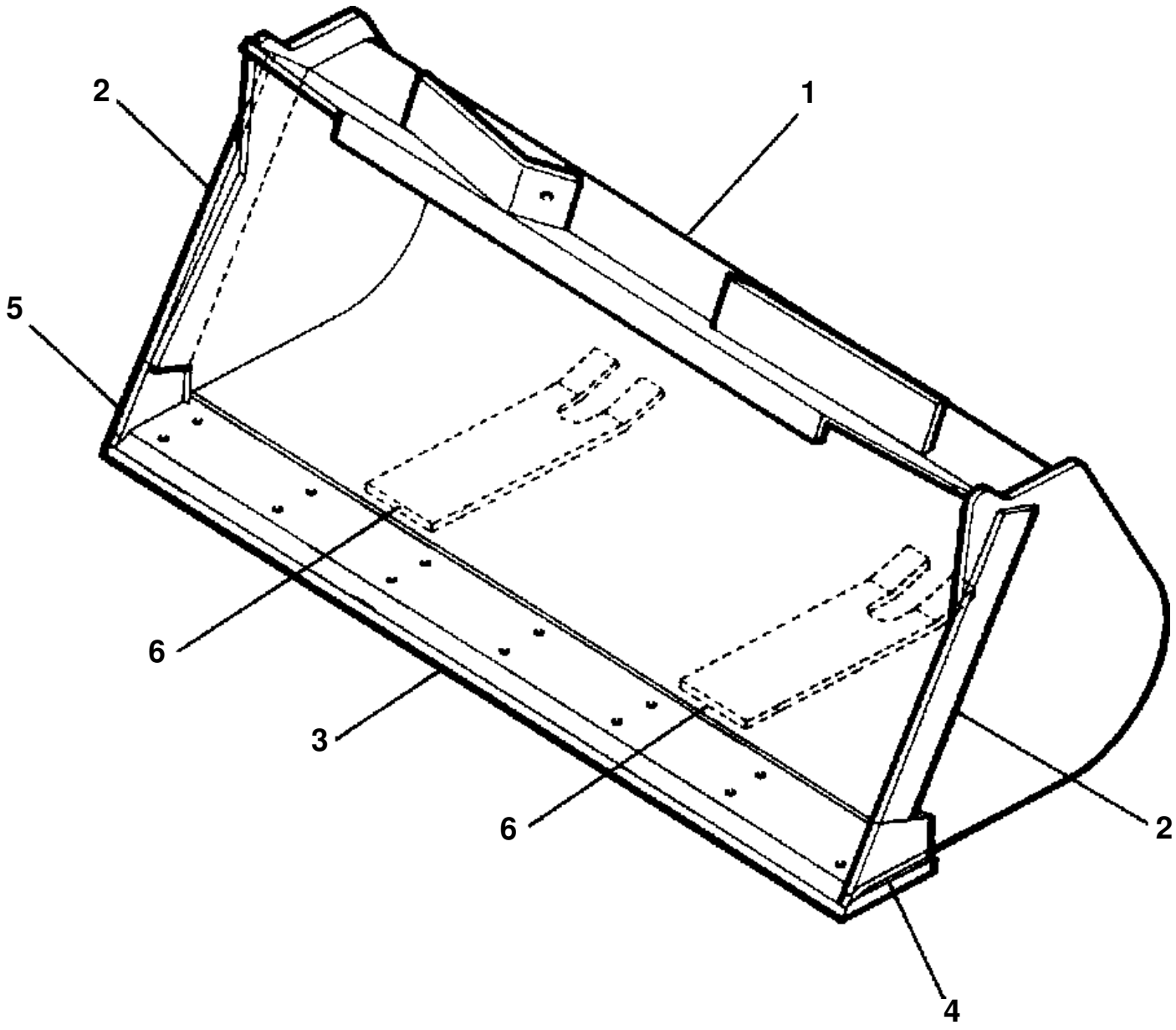

EXCAVATING BUCKET W/BOLT ON CUTTING EDGE 4.0 CUBIC YARDS

ITEM NO.	PART NO.	DESCRIPTION	Q'TY
	419-829-1210	BUCKET 4.0 CUBIC YARD	1
1	(NSS)	・ BUCKET	1
2	419-829-1220	・・ SIDE CUTTER	2
3	419-70-12221	・・ BLADE CUTTING	1
4	418-70-12431	・・ CORNER, LH	1
5	418-70-12441	・・ CORNER, RH	1
6	419-70-12141	・・ SKID, WEAR PLATE	2
		NOTE: BOLT ON CUTTING EDGE, SEE PG 07-019 FIG. 7405	

FIG 17DHW320.002 BOLT-ON BUCKET TEETH (KOMATSU)

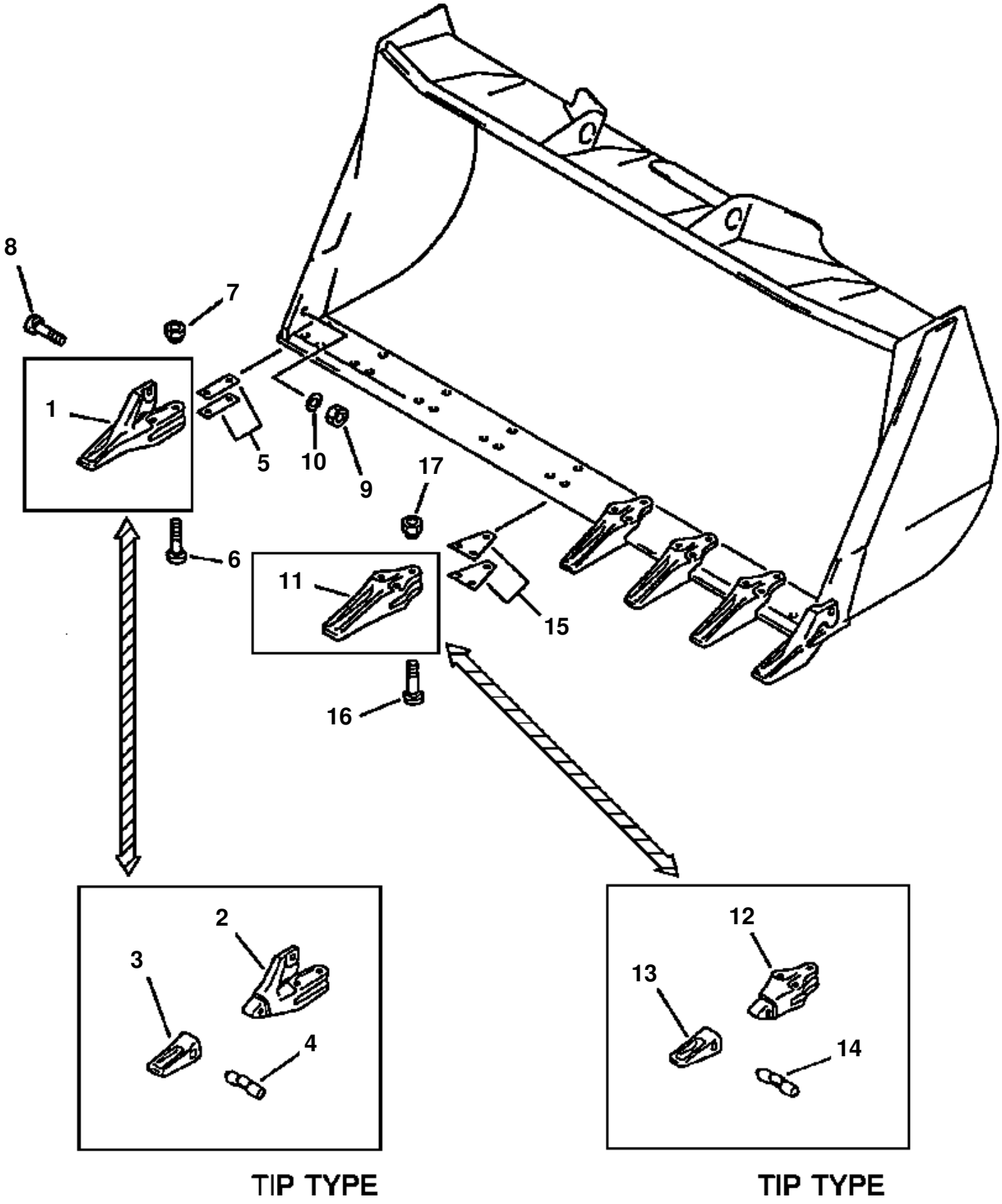

BOLT-ON BUCKET TEETH (KOMATSU)

ITEM NO.	PART NO.	DESCRIPTION	Q'TY
1	202-70-12130	TOOTH	2
2	419-847-1121	ADAPTER, LH - CORNER (TIP TYPE)	1
	419-847-1131	ADAPTER, RH - CORNER (TIP TYPE)	1
3	NOT USED		
4	09244-02496	PIN,MOUNT CORNER TEETH (TIP TYPE)	2
5	419-70-13190	SHIM, 0.5MM	2
	419-70-13180	SHIM, 1.0MM	2
6	09208-12595	BOLT, MOUNT CORNER ADAPTER OR TEETH	2
7	09218-12523	NUT	2
8	419-70-13150	BOLT, MOUNT CORNER ADAPTER OR TEETH	2
9	02290-11625	NUT	2
10	01643-32780	WASHER	2
11	202-70-12130	TOOTH, CENTER	6
12	419-847-1111	ADAPTER, CENTER (TIP TYPE)	6
13	NOT USED		
14	09244-02496	PIN, MOUNT CENTER TEETH (TIP TYPE)	6
15	419-70-13130	SHIM, 0.5MM	6
	419-70-13120	SHIM, 1.0MM	6
16	09208-12595	BOLT, MOUNT CENTER ADAPTER OR TEETH	12
17	09218-12523	NUT	12

FIG 17DHW320.001 BOLT-ON BUCKET TEETH (ESCO)

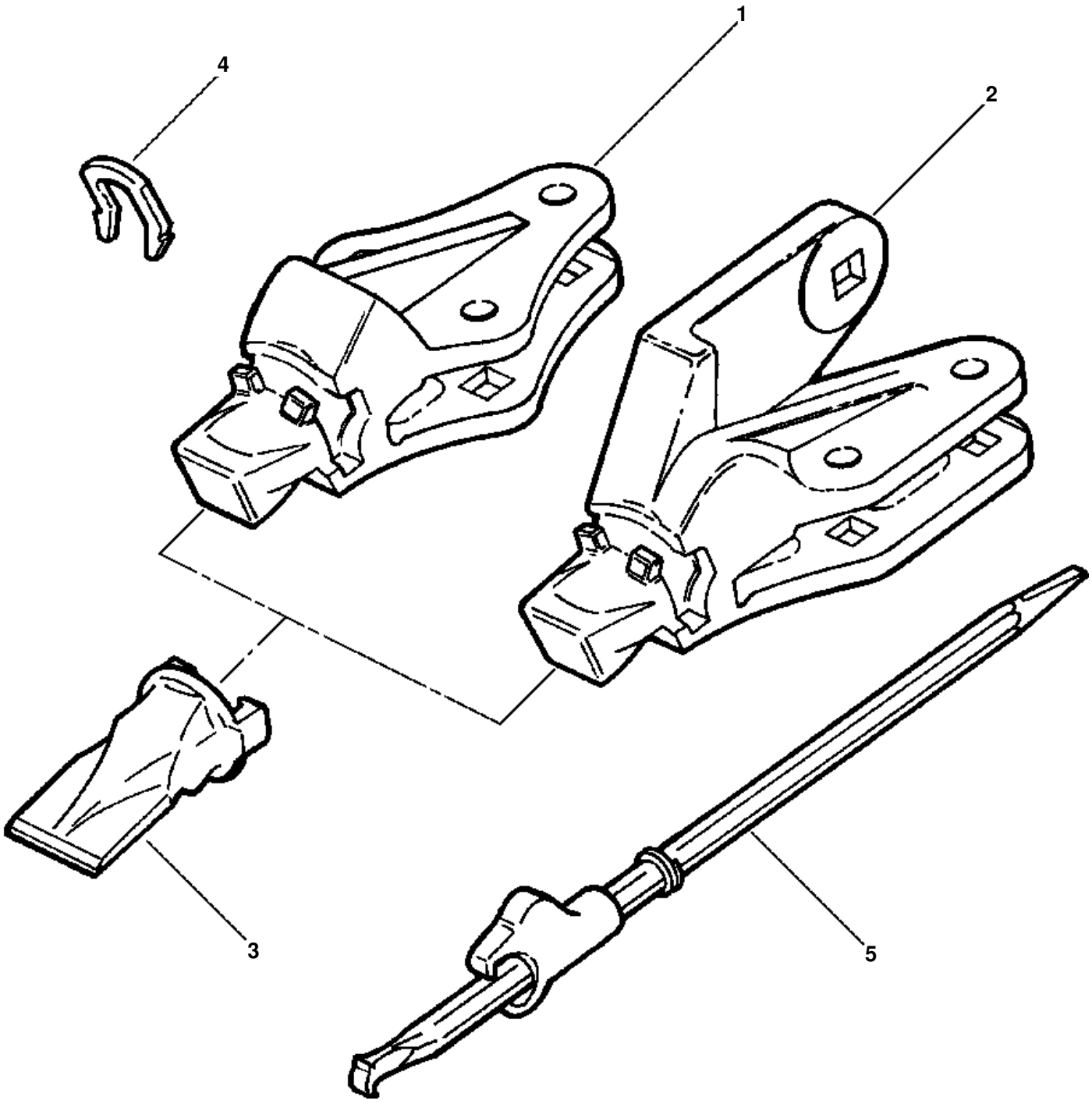

WA320-1LC S/N A25001-Up

BOLT-ON BUCKET TEETH (ESCO)

ITEM NO.	PART NO.	DESCRIPTION	Q'TY
1	418-847-A140	ADAPTER, CENTER	6
	02091-11605	BOLT, MOUNT CENTER ADAPTERS	12
	02290-11625	NUT	12
2	418-847-A150	ADAPTER, LH CORNER	1
	418-847-A160	ADAPTER, RH CORNER	1
	02090-11680	BOLT, MOUNT CORNER ADAPTERS	2
	02091-11600	BOLT, MOUNT CORNER ADAPTERS	2
	02290-11625	NUT	4
3	1233 356 H2	POINT,21TG HELILOK	8
4	1233 359 H1	LOCK, 21LK QUADRILOK	8
5	1222 946 H1	TOOL, QUADRILOK REMOVAL	1

FIG 17DRW320.001 **BOLT-ON CUTTING EDGE**

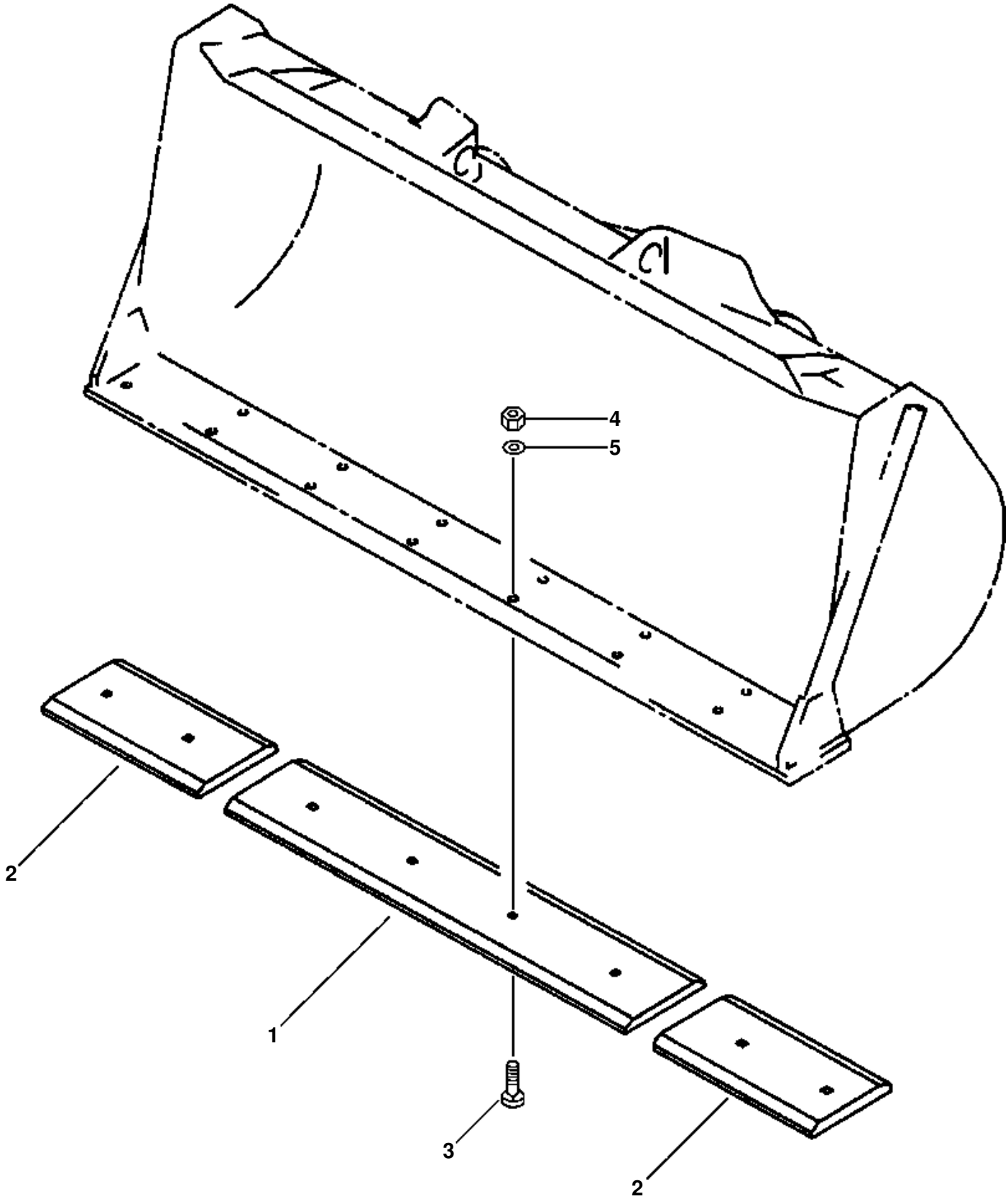

BOLT-ON CUTTING EDGE

ITEM NO.	PART NO.	DESCRIPTION	Q'TY
1	419-815-1211	EDGE CENTER, CUTTING	1
2	418-815-1221	EDGE SIDE, CUTTING	2
3	02090-11685	BOLT	8
4	02290-11625	NUT	8
5	01643-22460	WASHER	8

MARK PLATES, TOOLS & KITS

DESCRIPTION
MARKS AND PLATES (ENGLISH) DECALS
TOOLS

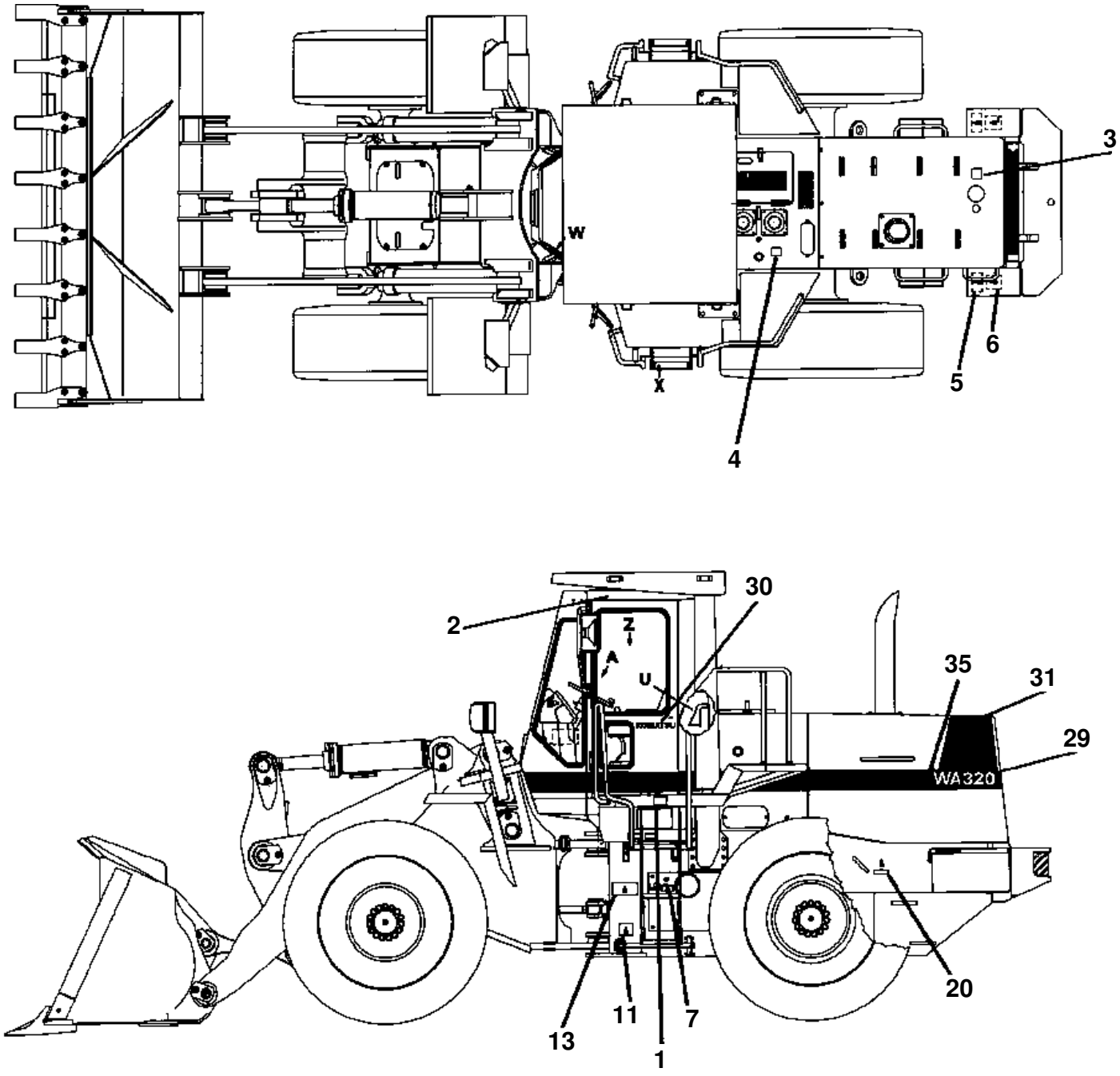
3
W
X
6
5
4
2
30
Z
A
U
35
31
29
WA320
20
11
7
13
1

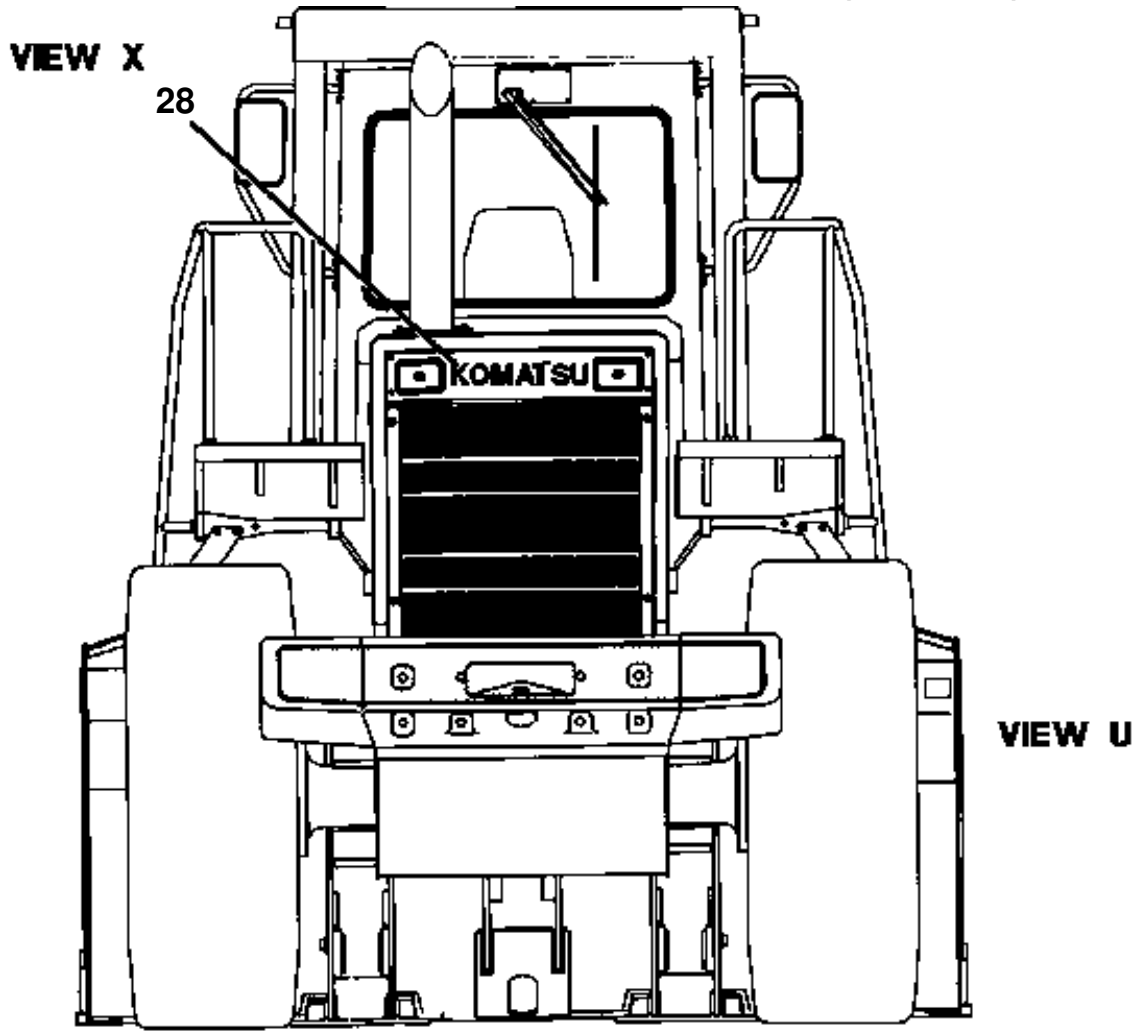
VIEW X
28
KOMATSU
VIEW U

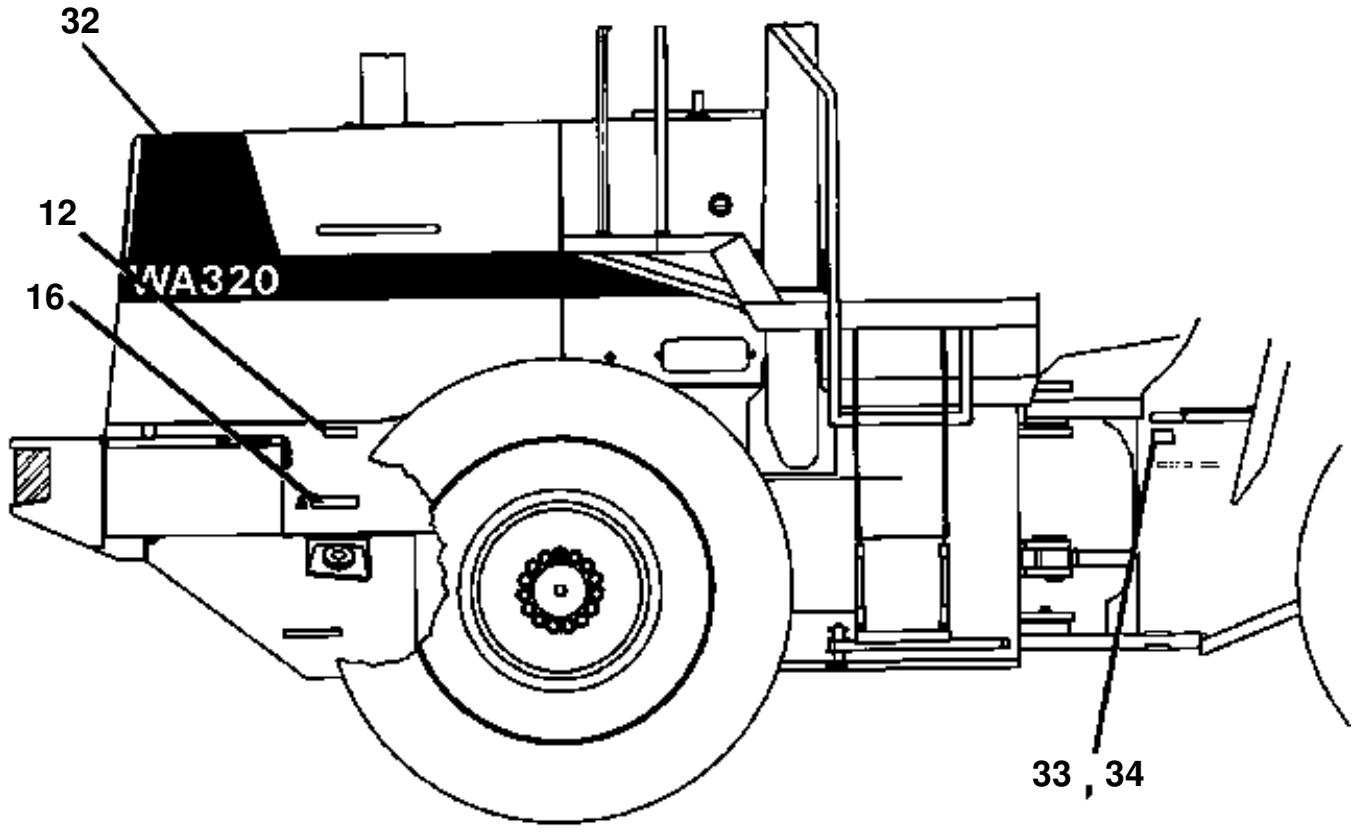
32
12
WA320
16
33 , 34
VIEW U

FIG 02ADW320.001 MARKS AND PLATES (ENGLISH) DECALS

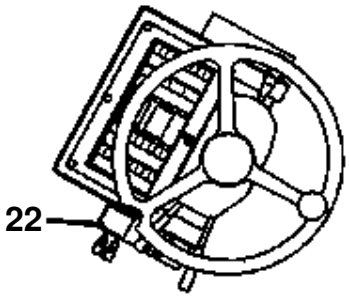

VIEW A

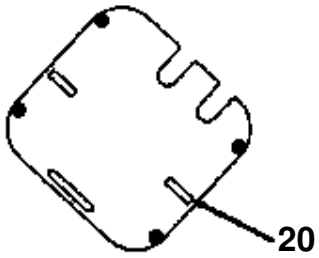

VIEW J

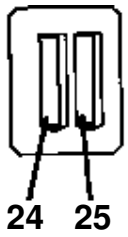

VIEW S

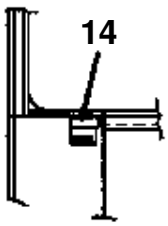

VIEW T

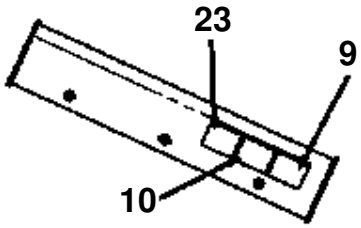

VIEW U



VIEW W

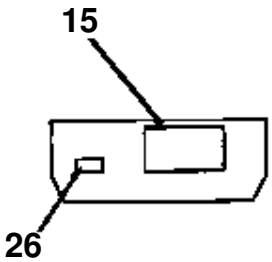

VIEW X

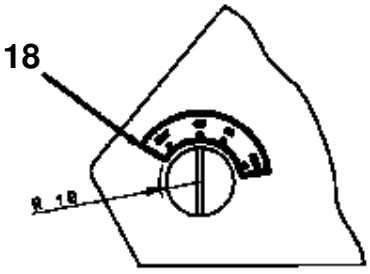

VIEW Y

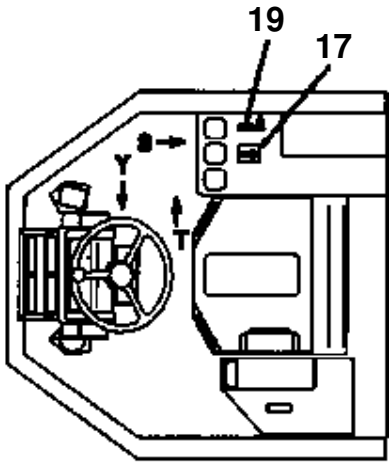

VIEW Z

MARKS AND PLATES (ENGLISH) DECALS

ITEM NO.	PART NO.	DESCRIPTION	Q'TY
		PERSONAL SAFETY PRODUCT GRAPHICS:	
1	161 177 H6	CAUTION - LADDERS	2
2	737 993 C2	CAUTION - ROLLOVER	1
3	204 166 C2	CAUTION - PRESSURIZED COOLING SYSTEM	1
4	2754 473 R3	CAUTION - HYDRAULIC RESERVOIR	1
5	421-93-A1180	CAUTION - BATTERY INSTALLATION	2
6	421-93-A1160	CAUTION - BATTERY CHARGING	2
7	421-93-A1120	CAUTION - TRANSMISSION OIL LEVEL	1
8		NOT USED	
9	421-93-A1130	CAUTION - OPERATOR INSTRUCTIONS	1
10	421-93-A1170	WARNING - OPERATOR MANUAL	1
11	421-93-A1140	DANGER - FRAME LOCKING BAR	1
12	421-93-A1210	CAUTION - ENGINE FAN	2
13	423-93-11420	DANGER - NO CLEARANCE - ARTICULATION	2
14	1170 724 C2	EMERGENCY EXIT (ON WINDOW SILL)	1
		INSTRUCTIONAL PRODUCT GRAPHICS:	
15	419-93-11760	LUBE CHART	1
16	1124 685 C2	DIESEL FUEL	1
17	09685-00004	CONTROL LEVER LOCK	1
18	09683-30070	STARTER SWITCH	1
19	421-93-11132	BUCKET POSTION	1
20	1120 093 C2	LIFT AND TIE DOWN LOCATION	4
21	419-93-11911	ELECTRONIC MONITOR DECAL (LOCATED ON WINDOW)	1
22	421-93-A1110	ETHER START	1
23	421-93-A1220	TRANSMISSION OIL TEMP	1
24	419-93-11770	FUSE IDENTIFICATION	1
25	419-93-11391	FUSE ACCESSORIES IDENTIFICATION	1
26	1104 217 C2	ENGINE OIL DRAIN	1
27		NOT USED	
		IDENTIFICATION PRODUCT GRAPHICS:	
28	09690-C0315	IN KOMATSU IN ON GRILL	1
29	419-93-11471	IN WA320 IN MARK	2
30	09690-C0224	IN KOMATSU IN MARK-CAB	2
31	419-93-A1230	DECAL - LEFT HAND	1
32	419-93-A1240	DECAL - RIGHT HAND	1
N/I	419-93-A1260	DECAL - STRIPE TOP	1
		MISCELLANEOUS PRODUCT GRAPHICS:	
33	425-93-A1141	I.D. PLATE	1
34	04418-13060	SCREW	4
35	419-93-A1250	TAPE STRIPE	2
		MEMORANDUM PAGE	

FIG 02AMW320.001 **TOOLS**

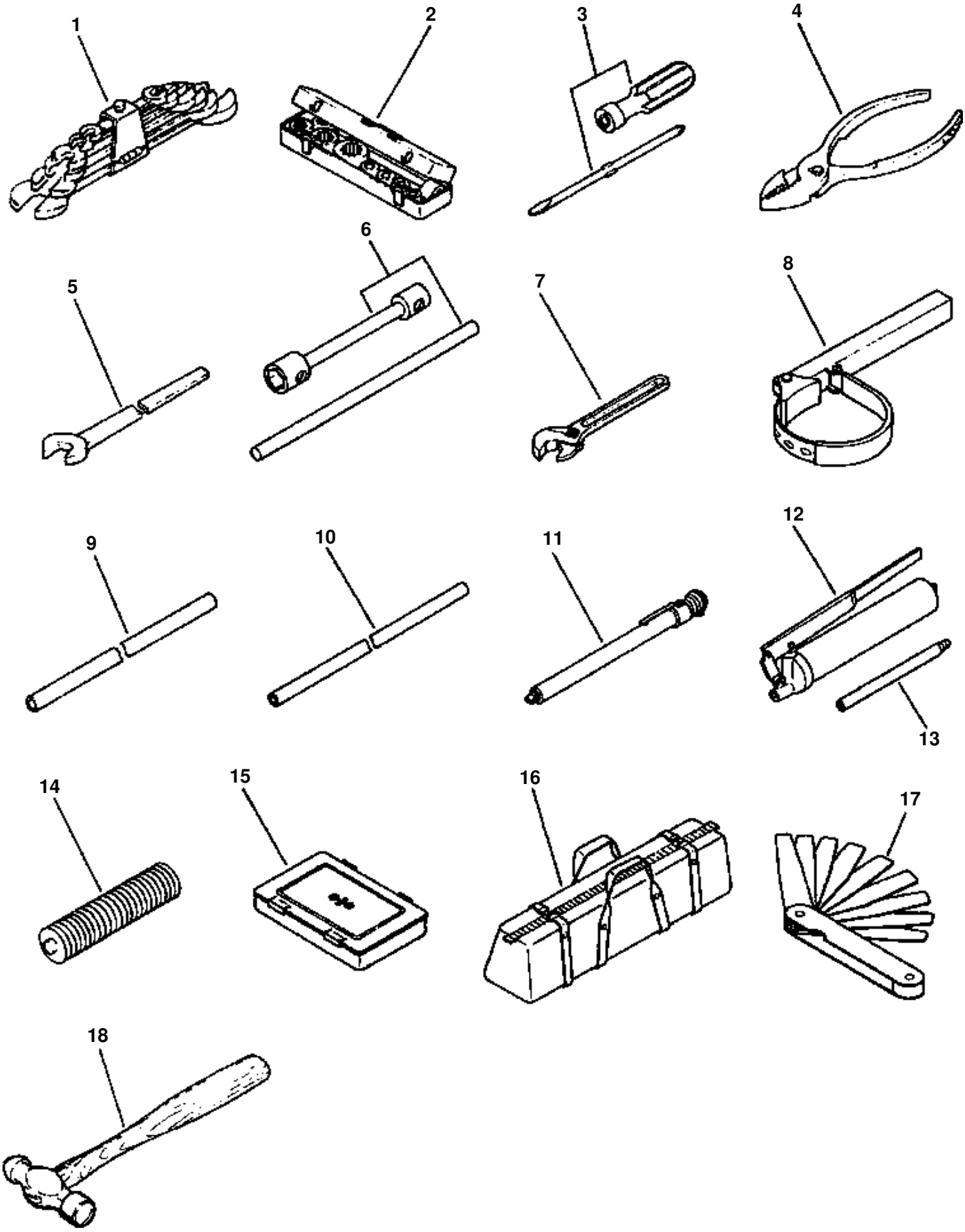

TOOLS

ITEM NO.	PART NO.	DESCRIPTION	Q'TY
1	09000-30006	WRENCH SET	1
2	09020-10284	SOCKET WRENCH SET	1
3	09033-00190	SCREW DRIVER	1
4	09036-00150	PLIERS	1
5	09001-03600	WRENCH	1
6	417-98-11121	WRENCH, TIRE	1
7	09014-10200	WRENCH, ADJUSTABLE	1
8	09019-08035	WRENCH, FILTER	1
9	417-98-11110	BAR, BREAKER	1
10	424-98-11120	HOSE, AIR	1
11	09289-00000	GAUGE, TIRE PRESSURE	1
12	07952-70002	PUMP ASSEMBLY, GREASE	1
	07950-10450	· PUMP, GREASE	1
13	07951-21022	· NOZZLE, GREASE PUMP	1
14	07950-90403	CARTRIDGE, GREASE	1
15	09989-03046	BOX, BILL	1
16	09056-05620	BAG, TOOL	1
17	09054-00009	GAUGE, THICKNESS	1
18	09039-00150	HAMMER, BALL PEEN	1

DESCRIPTION
CYLINDER HEAD
CYLINDER BLOCK
LUBRICATING OIL SYSTEM
FUEL SYSTEM
COOLING SYSTEM
ELECTRICAL SYSTEM
ENGINE MOUNTING
GASKET SETS AND REPAIR KITS

CYLINDER HEAD

DESCRIPTION
CYLINDER HEAD
ROCKER LEVERS
ROCKER LEVER COVER
CRANKCASE BREATHER PLUMBING
EXHAUST MANIFOLD
TURBO PLUMBING
TURBOCHARGER
INTAKE MANIFOLD
EXHAUST CONNECTION

FIG E1AC614T.001 **CYLINDER HEAD**

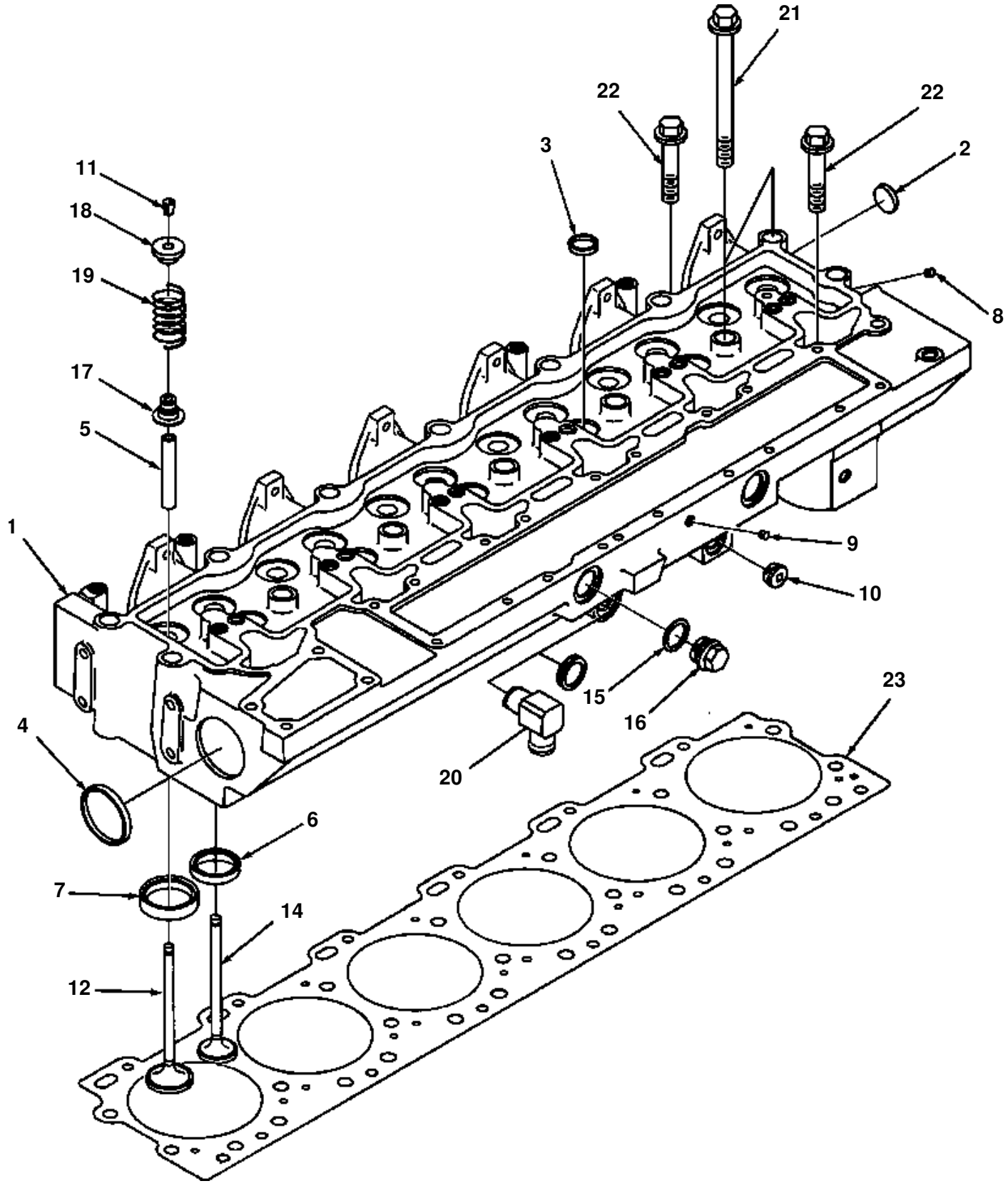

CYLINDER HEAD

ITEM NO.	PART NO.	DESCRIPTION	Q'TY	REF
	1294 846 H91	HEAD, CYLINDER	1	
1	(NSS)	· HEAD, CYLINDER	1	
2	1240 889 H1	· PLUG, EXPANSION	1	
3	1246 342 H1	· PLUG, EXPANSION	5	
4	1240 154 H1	· PLUG, EXPANSION	2	
5	1240 900 H1	· GUIDE VALVE STEM	12	
6	1241 192 H1	· INSERT, VALVE	6	
7	1241 223 H1	· INSERT, VALVE	6	
8	1241 158 H1	· PLUG, PIPE	1	
9	1239 158 H1	· PLUG, PIPE	1	
10	1239 159 H1	· PLUG, PIPE	2	
N/I	1294 848 H1	· KIT, INTAKE VALVE	6	
11	1240 898 H1	· · COLLET, VALVE	1	
12	(NSS)	· · VALVE, INTAKE	1	
N/I	1241 172 H91	· KIT, EXHAUST VALVE	6	
11	1240 898 H1	· · COLLET, VALVE	1	
14	(NSS)	· · VALVE, EXHAUST	1	
15	1240 197 H1	· WASHER, SEALING	2	
16	1240 255 H1	· PLUG, THREADED	2	
17	1241 663 H1	· SEAL, VALVE STEM	12	
18	1241 211 H2	· RETAINER, VALVE SPRING	12	
19	1241 009 H1	· SPRING, VALVE	12	
20	1294 847 H1	· COUPLING, ELBOW HOSE - W/COMPRESSOR	1	
	1294 849 H1	· PLUG, EXPANSION - WO/COMPRESSOR	1	
21	1294 850 H1	BOLT	14	
22	1294 851 H1	BOLT	12	
23	1295 449 H1	GASKET, CYLINDER HEAD	1	F1
		F1 -FOR OVERSIZE CYLINDER HEAD GASKET, SEE PG E9-004 OR E9-005		

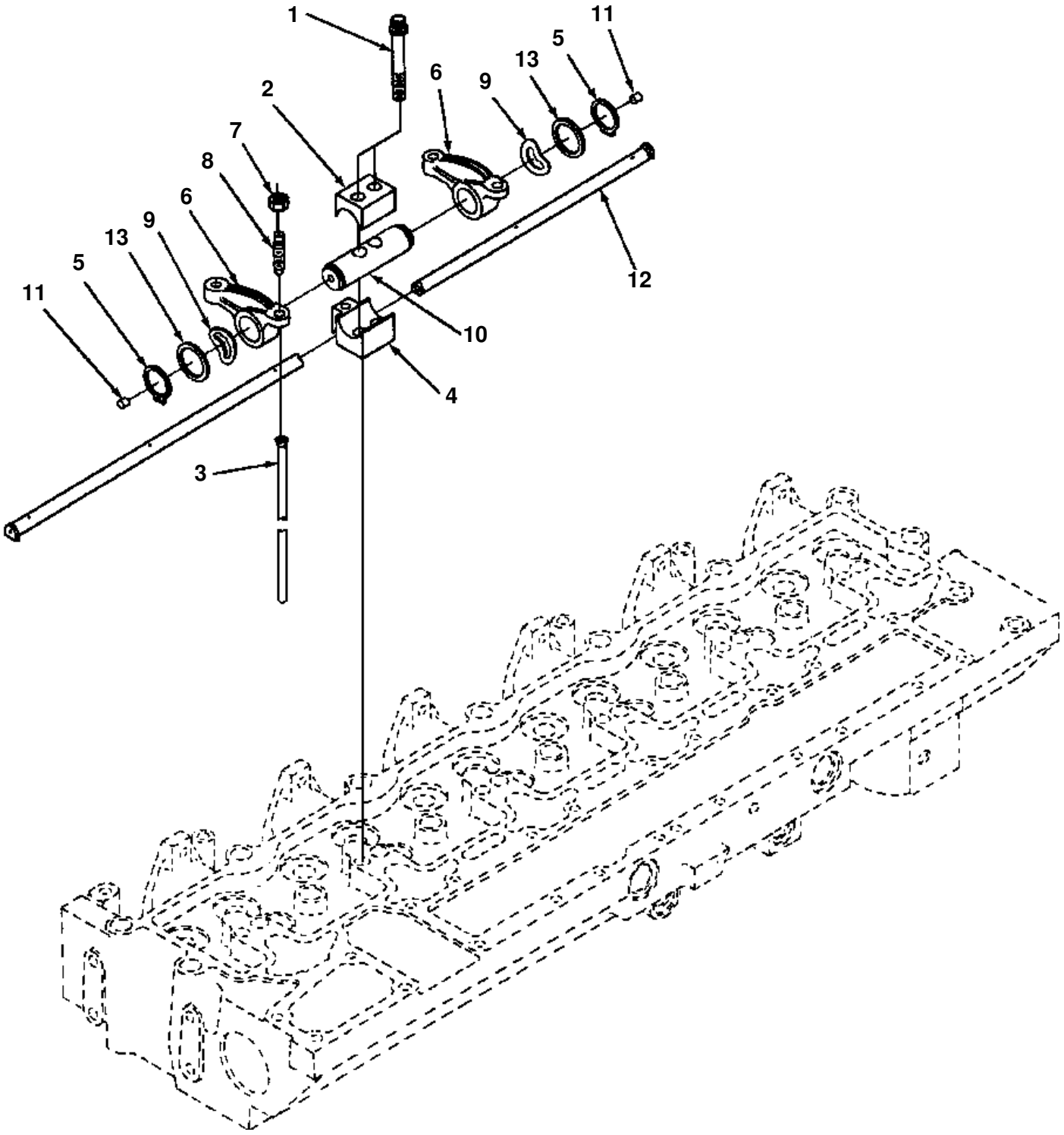
1
2
3
4
5
6
7
8
9
10
11
12
13

ROCKER LEVERS

ITEM NO.	PART NO.	DESCRIPTION	Q'TY
1	1240 926 H1	BOLT	12
2	1240 934 H1	CLAMP, RETAINING	6
3	1240 974 H1	ROD, PUSH	12
4	1240 993 H1	SUPPORT, ROCKER LEVER	6
5	1240 940 H1	RING, RETAINING	12
	1240 935 H91	LEVER ASSEMBLY, ROCKER	12
6	(NSS)	· LEVER, ROCKER	1
7	1238 627 H1	· NUT, HEX	1
8	1240 147 H1	· SCREW, SET	1
9	1240 996 H1	WASHER, SPRING	12
	1241 251 H92	SHAFT ASSEMBLY, ROCKER LEVER	6
10	(NSS)	· SHAFT, ROCKER LEVER	1
11	1241 206 H1	· PLUG, EXPANSION	2
12	1296 637 H1	MANIFOLD ASSEMBLY, OIL	1
13	1241 054 H1	WASHER, PLAIN	12

FIG E1AL614T.001 **ROCKER LEVER COVER**

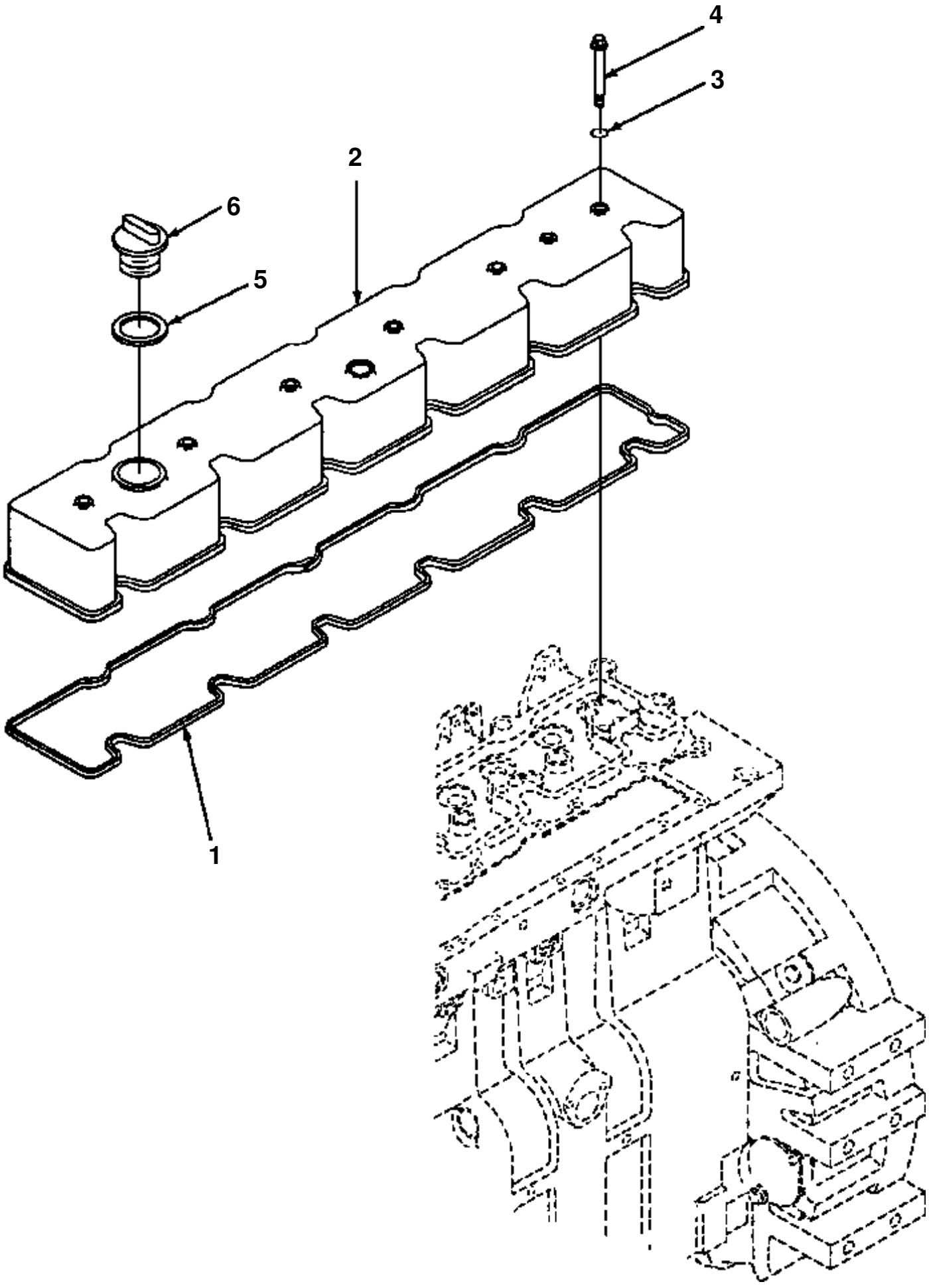

ROCKER LEVER COVER

ITEM NO.	PART NO.	DESCRIPTION	Q'TY
1	1240 984 H1	GASKET, VALVE COVER	1
2	1241 069 H1	COVER, VALVE	1
3	1240 186 H2	O-RING	6
4	1295 096 H1	BOLT	6
5	1240 956 H1	O-RING	1
6	1240 957 H1	CAP, FILLER - OIL	1

FIG E1AO614T.001 CRANKCASE BREATHER PLUMBING

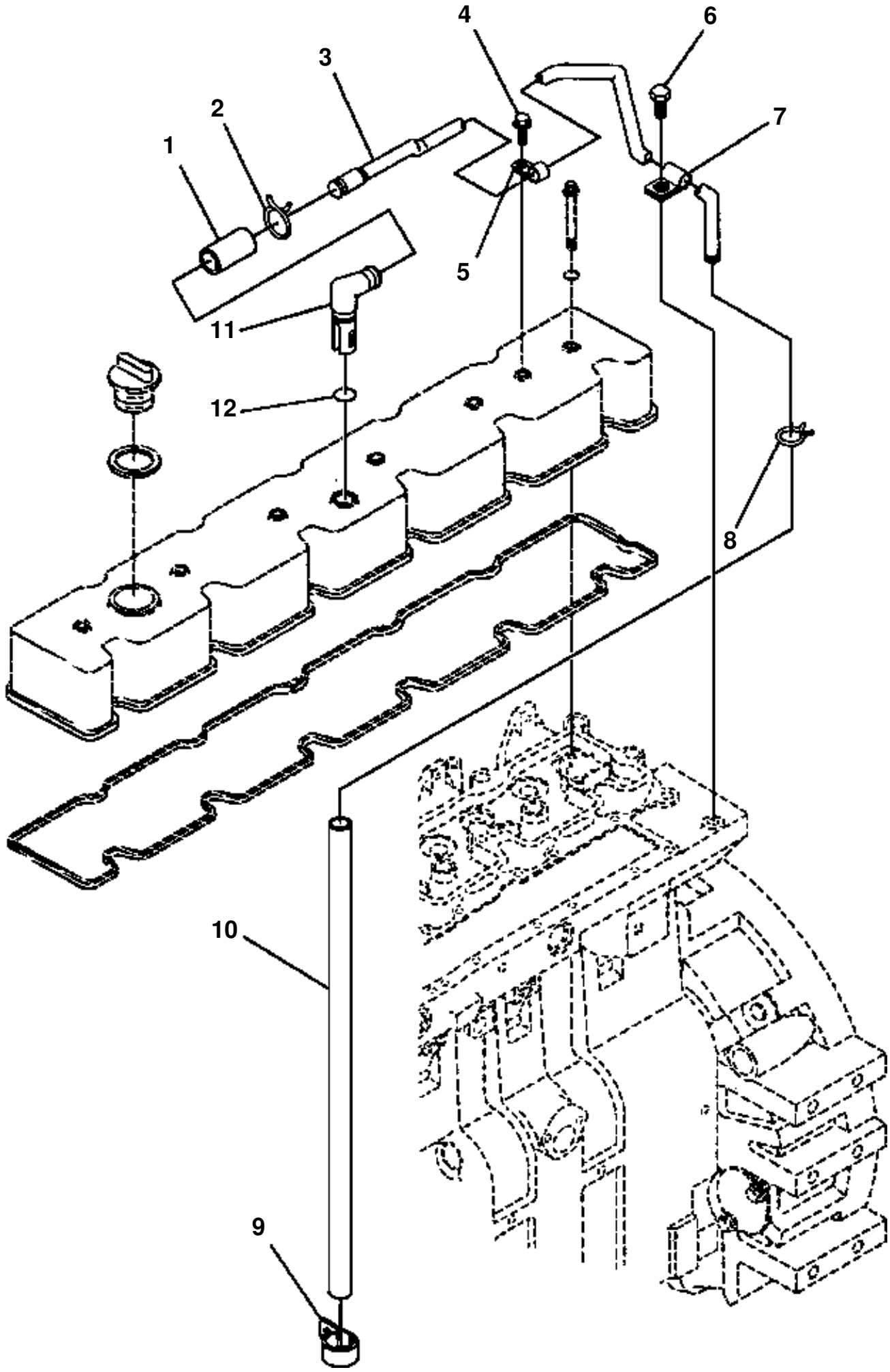

CRANKCASE BREATHER PLUMBING

ITEM NO.	PART NO.	DESCRIPTION	Q'TY
1	1294 799 H1	HOSE, PLAIN	1
2	1294 798 H1	CLAMP, SPRING	2
3	1241 138 H1	TUBE, BREATHER	1
4	1240 878 H1	SCREW, SELF TAPPING	1
5	1241 074 H1	CLAMP	1
6	1240 173 H1	BOLT	1
7	1241 101 H1	CLAMP	1
8	1241 073 H1	CLAMP, SPRING	1
9	1240 391 H2	CLAMP	1
10	1296 638 H1	HOSE, PLAIN	1
11	1241 048 H2	CONNECTION, VENT	1
12	1241 135 H1	O-RING	1

FIG E1AR614T.002 EXHAUST MANIFOLD

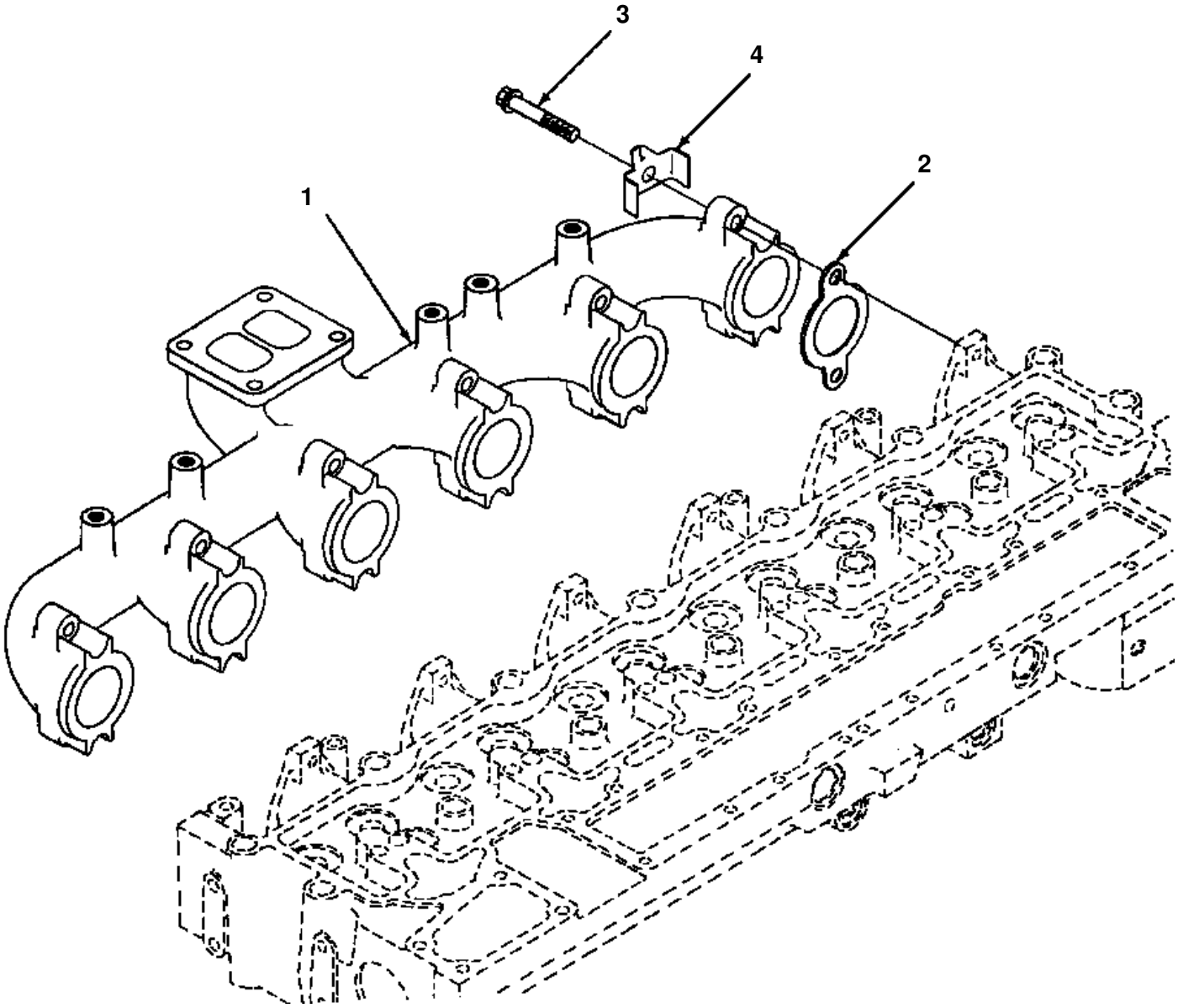

EXHAUST MANIFOLD

ITEM NO.	PART NO.	DESCRIPTION	Q'TY
1	1241 195 H1	MANIFOLD, EXHAUST	1
2	1295 717 H1	GASKET, EXHAUST MANIFOLD	6
3	1294 855 H1	BOLT	12
4	1266 991 H1	LOCKPLATE	12

FIG E1AT614T.001 **TURBO PLUMBING**

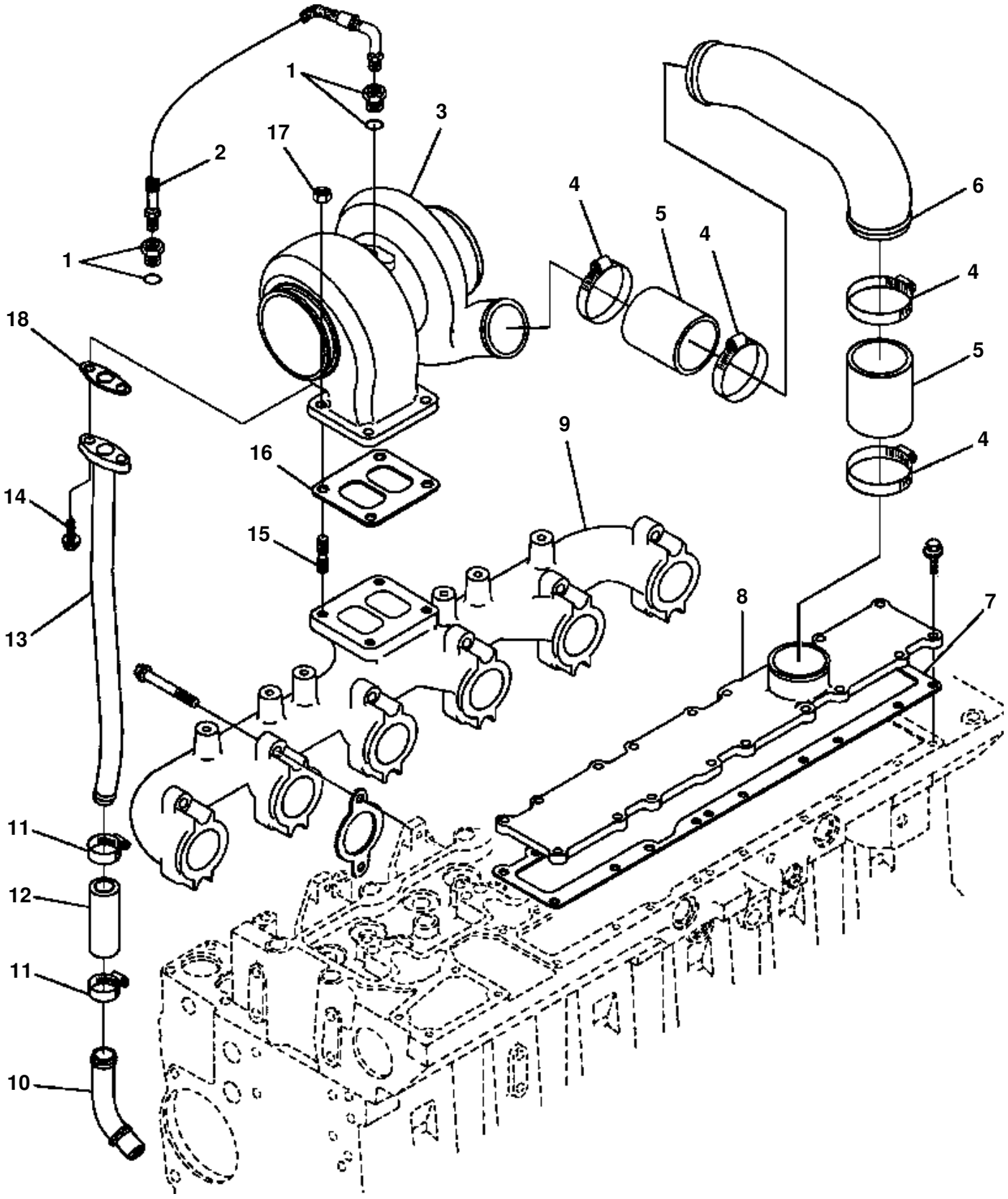

TURBO PLUMBING

ITEM NO.	PART NO.	DESCRIPTION	Q'TY
1	1282 066 H2	ELBOW, PLAIN ADAPTER	2
	1294 458 H1	O-RING	1
2	1294 153 H1	HOSE, FLEXIBLE	1
3		TURBOCHARGER (SEE PG E1-014)	
4	1239 531 H1	CLAMP, HOSE	4
5	1294 856 H2	HOSE, PLAIN	2
6	1241 032 H1	TUBE, AIR	1
7		GASKET, INTAKE MANIFOLD COVER (SEE PG E1-016)	
8		COVER, INTAKE MANIFOLD (SEE PG E1-016)	
9		MANIFOLD, EXHAUST (SEE PG E1-010)	
10	1240 658 H1	TUBE, TURBO OIL DRAIN	1
11	1242 005 H1	CLAMP, HOSE	2
12	1240 659 H1	HOSE, PLAIN	1
13	1241 033 H2	CONNECTION, TURBO OIL DRAIN	1
14	1240 141 H1	BOLT	2
15	1240 549 H1	STUD	4
16		GASKET, TURBOCHARGER (SEE PG E1-014)	
17	1240 550 H1	NUT, HEX	4
18		GASKET, OIL DRAIN (SEE PG E1-014)	
N/I	1239 159 H1	PLUG, PIPE	1

FIG E1BC614T.001 **TURBOCHARGER**

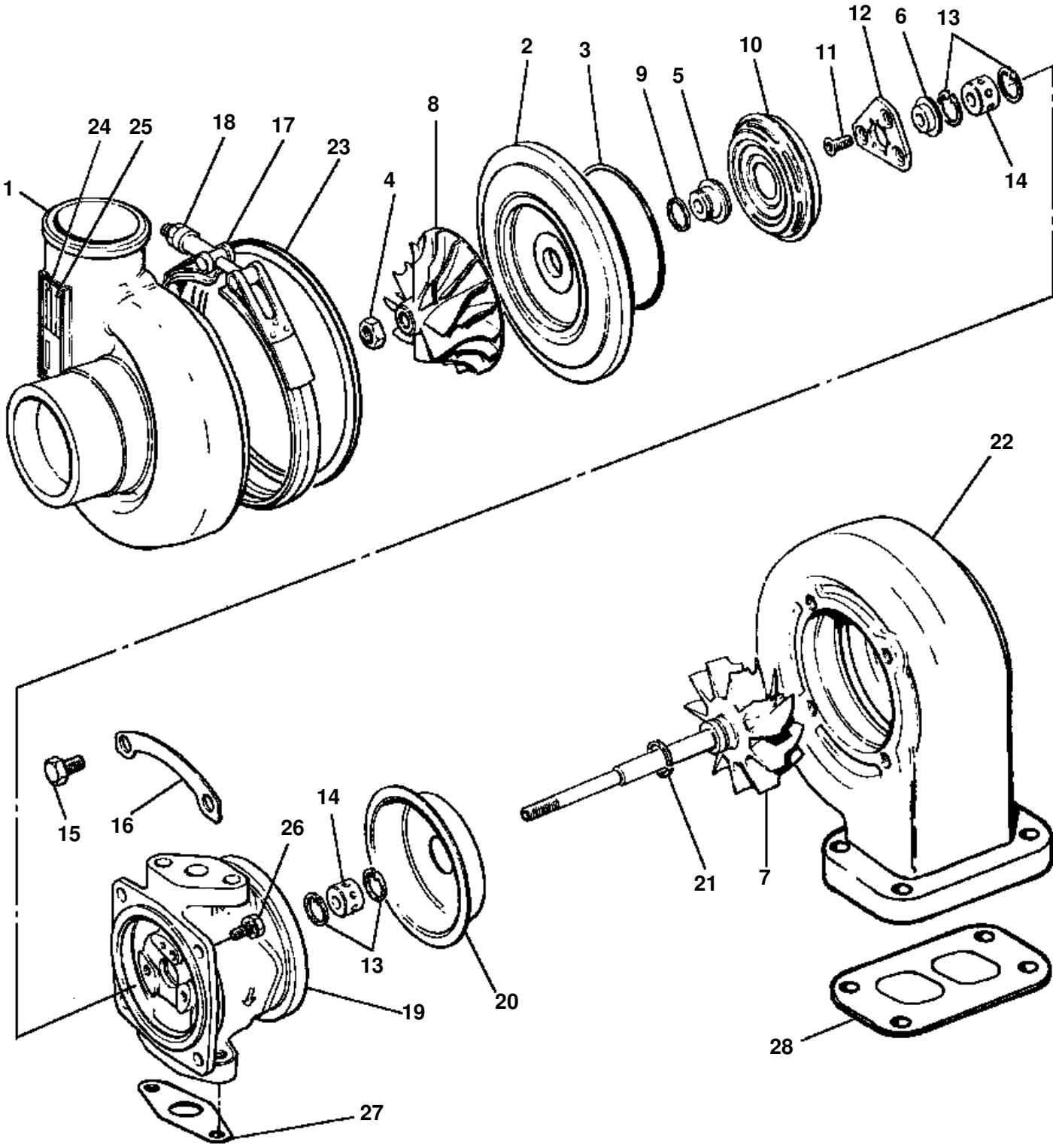

TURBOCHARGER

ITEM NO.	PART NO.	DESCRIPTION	Q'TY	REF
	1241 182 H92	TURBOCHARGER ASSEMBLY	1	
1	1241 163 H1	· HOUSING, COMPRESSOR	1	
2	1240 504 H1	· DIFFUSER, TURBO	1	
3	1240 489 H1	· O-RING	1	F1
	1258 153 H91	· ROTOR ASSEMBLY	1	
4	1240 492 H1	· · NUT, HEX	1	
5	1240 493 H1	· · SLINGER, OIL	1	
6	1240 494 H1	· · COLLAR, THRUST	1	
7	1241 167 H1	· · SHAFT & WHEEL	1	
8	1241 164 H1	· · IMPELLER, TURBO	1	
9	1246 480 H1	· O-RING	1	F1
10	1246 467 H1	· BAFFLE, OIL	1	
11	1246 465 H1	· BOLT	3	F1
12	1270 365 H1	· BEARING, THRUST	1	F1
13	1240 510 H1	· RING, RETAINING	2	F1
14	1240 490 H1	· BEARING, TURBOCHARGER	1	F1
15	1246 481 H1	· BOLT	4	F1
16	1240 487 H1	· PLATE, CLAMPING	2	
17	1240 501 H1	· CLAMP, TURBO	1	
18	1241 715 H1	· NUT, HEX	1	
19	1240 498 H2	· HOUSING, TURBO BEARING	1	
20	1240 496 H1	· SHIELD, TURBO HEAT	1	
21	1246 479 H1	· O-RING	1	F1
22	1241 165 H1	· HOUSING, TURBINE	1	
23	1240 506 H1	· SEAL	1	
24	(NSS)	· DATAPLATE	1	
25	(NSS)	· SCREW, DRIVE	4	
26	1278 296 H1	· BOLT	4	F1
27	1241 287 H1	GASKET, OIL DRAIN - TURBO	1	F1
28	1241 249 H1	GASKET, TURBOCHARGER	1	F1
	1270 035 H91	KIT, TURBO REPAIR	1	
		F1 - INCLUDED IN TURBO REPAIR KIT 1270 035 H91		

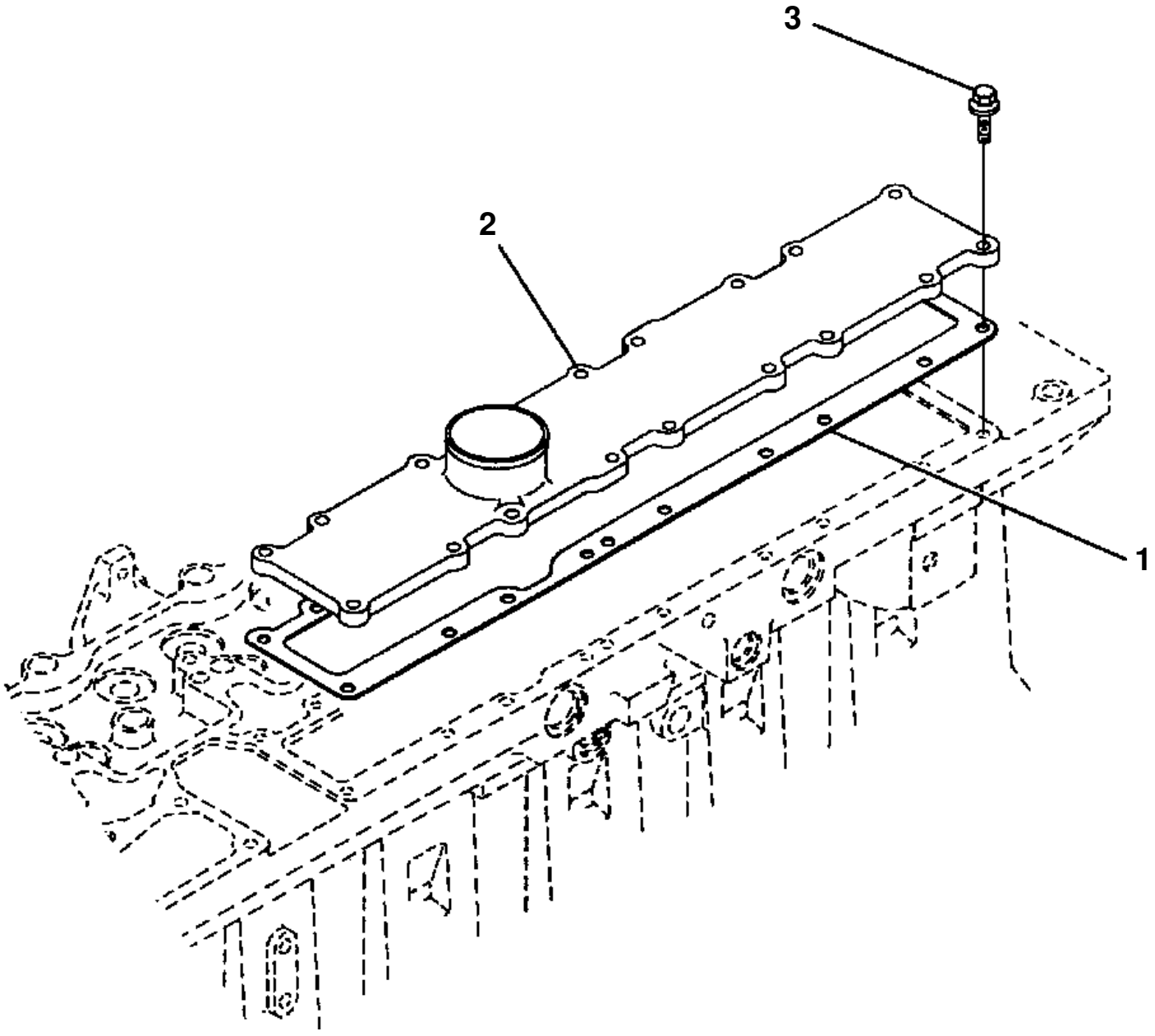
3
2
1

INTAKE MANIFOLD

ITEM NO.	PART NO.	DESCRIPTION	Q'TY
1	1266 456 H1	GASKET, INTAKE MANIFOLD	1
2	1295 754 H1	COVER, INTAKE MANIFOLD	1
3	1240 590 H1	BOLT	18

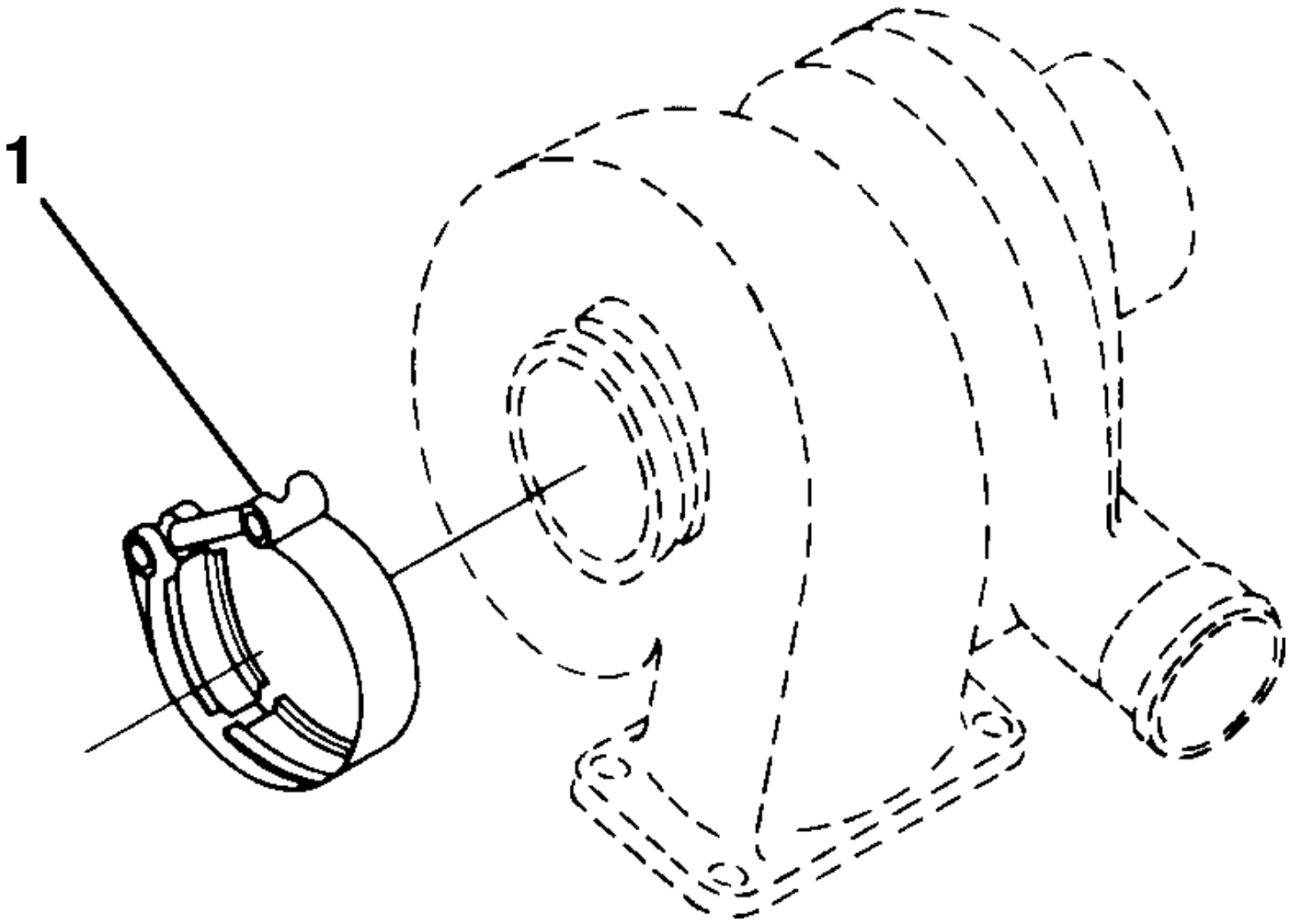
1

EXHAUST CONNECTION

ITEM NO.	PART NO.	DESCRIPTION	Q'TY
1	1240 975 H1	CLAMP, V-BAND	1

CYLINDER BLOCK

DESCRIPTION
CYLINDER BLOCK
FRONT GEAR COVER
OIL PAN
FLYWHEEL
CRANKSHAFT
VIBRATION DAMPER
PISTON & CONNECTING ROD
CAMSHAFT
OIL FILL LOCATION
OIL LEVEL GAUGE

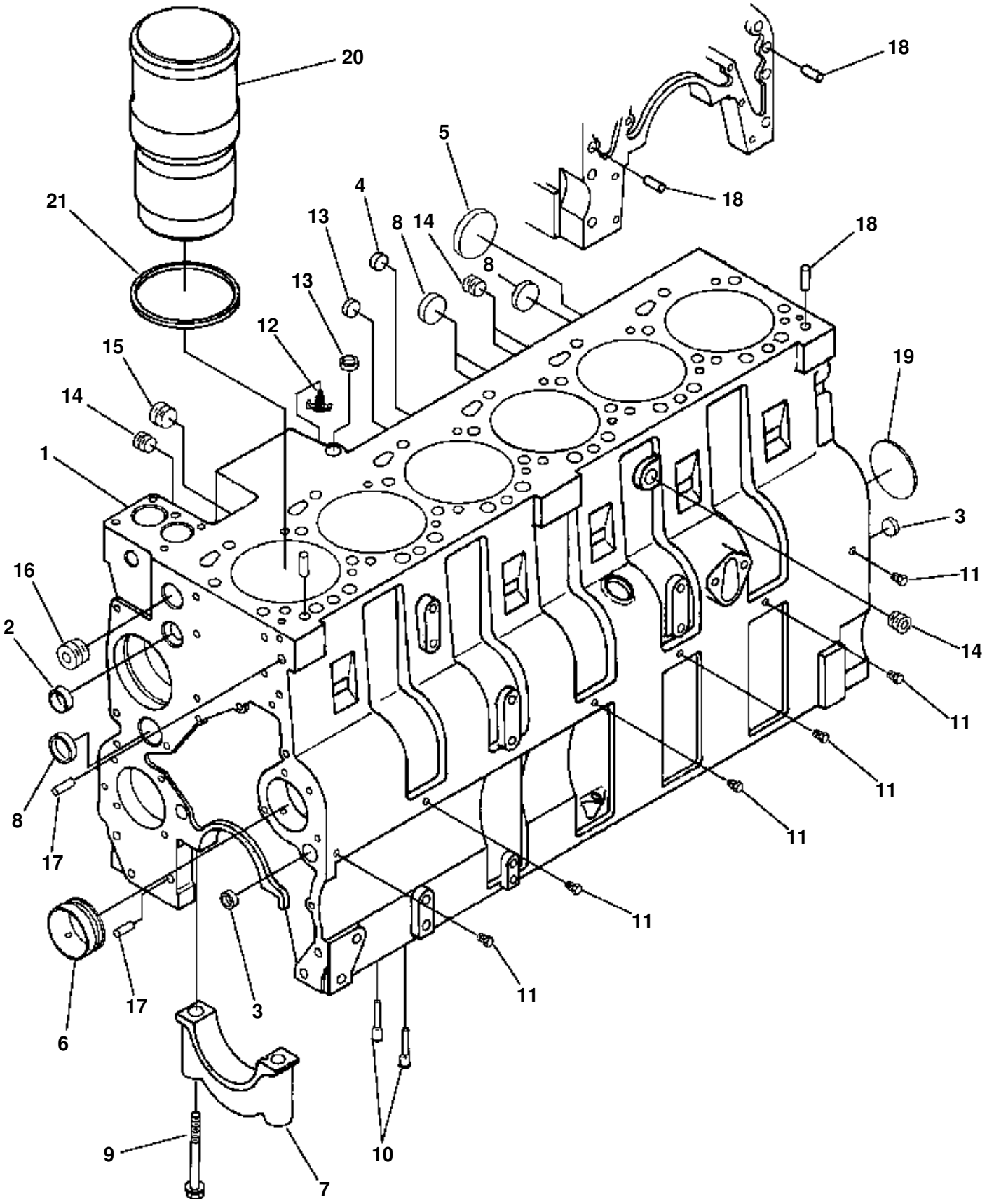
20
18
5
18
4
21
13
8
14
18
8
13
12
15
19
14
1
3
16
11
2
14
11
8
11
17
11
11
17
3
6
9
10
7

CYLINDER BLOCK

ITEM NO.	PART NO.	DESCRIPTION	Q'TY	REF
	1294 789 H94	BLOCK ASSY, CYLINDER	1	
1	(NSS)	· BLOCK, CYLINDER	1	
2	1240 888 H1	· PLUG, EXPANSION	1	
3	1240 891 H1	· PLUG, EXPANSION	4	
4	1240 449 H1	· PLUG, EXPANSION	2	F1
	1240 449 H1	· PLUG, EXPANSION	1	
5	1240 154 H2	· PLUG, EXPANSION	1	
6	1240 933 H1	· BUSHING, CAMSHAFT	7	
7	1240 920 H1	· CAP, MAIN BEARING	7	
8	1240 979 H1	· PLUG, EXPANSION	4	
9	1294 790 H1	· SCREW, HEX FLANGE HEAD CAP	14	
10	1294 792 H1	· NOZZLE, PISTON COOLING	12	F1
11	1240 370 H1	· PLUG, PIPE	6	F1
12	1238 127 H1	· DRAINCOCK	1	F1
13	1240 891 H1	· PLUG, EXPANSION	4	F1
14	1239 159 H1	· PLUG, PIPE	1	F1
15	1239 160 H1	· PLUG, PIPE	1	F1
16	1239 161 H1	· PLUG, PIPE	1	F1
17	1240 128 H1	· DOWEL, PIN	2	F1
18	1240 944 H1	· DOWEL, PIN	4	F1
19	1240 946 H1	· PLUG, EXPANSION	1	F1
	1241 175 H91	KIT, LINER	6	
20	1241 076 H1	· LINER, CYLINDER	1	
21	1241 196 H1	· SEAL, RECTANGULAR RING	1	
	1296 605 H1	SHIM, COUNTERBORE SERVICE - 0.010 OS	A/R	
	1296 604 H1	SHIM, COUNTERBORE SERVICE - 0.015 OS	A/R	
	1296 603 H1	SHIM, COUNTERBORE SERVICE - 0.020 OS	A/R	
	1258 620 H91	· KIT, CYLINDER BLOCK	1	
		F1 - INCLUDE IN CYLINDER BLOCK SERVICE KIT 1258 620 H91		

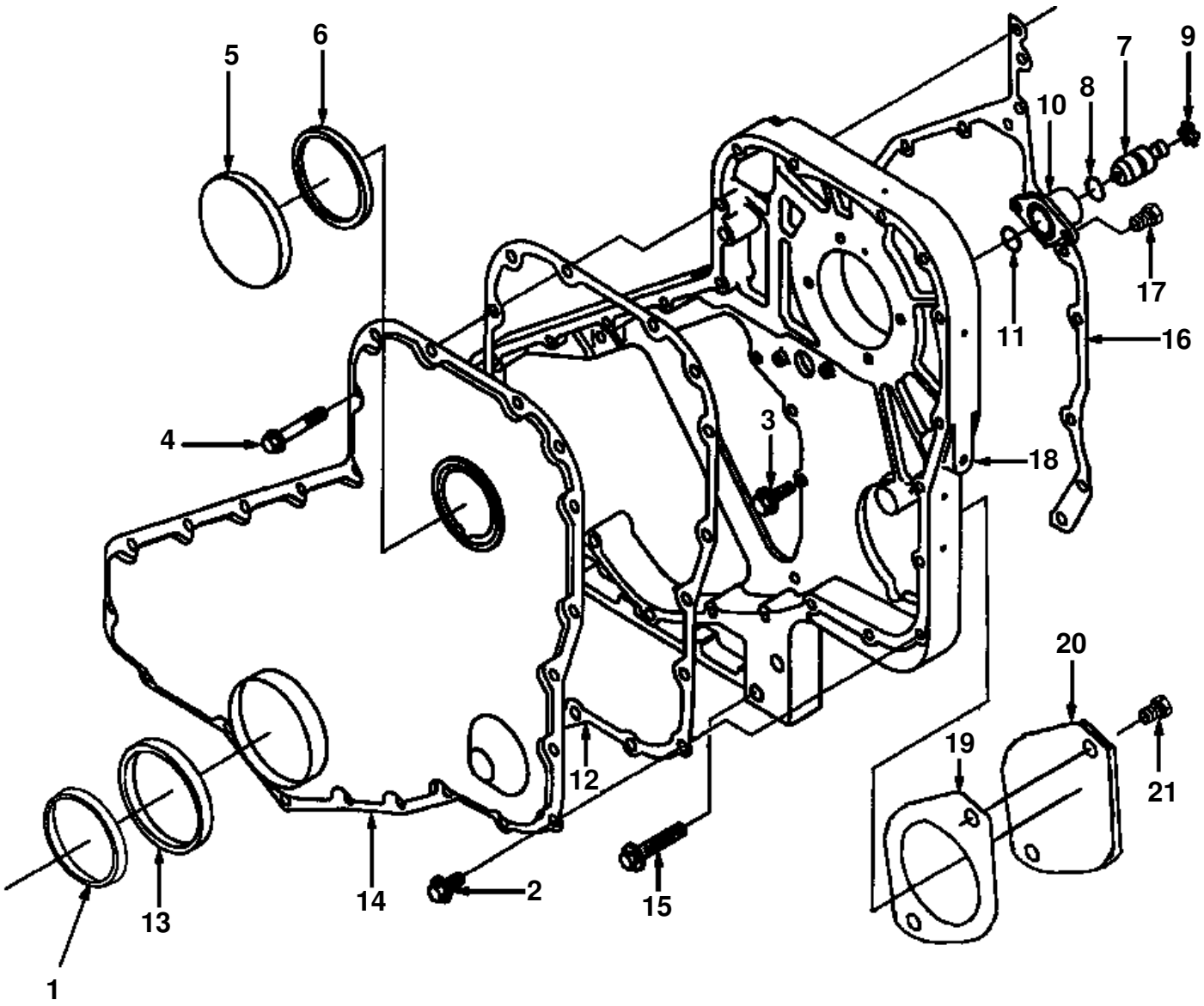
1
2
3
4
5
6
7
8
9
10
11
12
13
14
15
16
17
18
19
20
21

FRONT GEAR COVER

ITEM NO.	PART NO.	DESCRIPTION	Q'TY	REF
1	1294 852 H1	DUST SHIELD	1	
2	1240 140 H1	BOLT	17	
3	1240 141 H1	BOLT	5	
4	1240 144 H1	BOLT	6	
5	1240 216 H1	COVER, ACCESS HOLE	1	
6	1240 217 H1	O-RING	1	
7	1240 240 H1	PIN, TIMING	1	
8	1241 283 H1	O-RING	1	
9	1240 296 H1	RING, RETAINING	1	
10	1295 493 H1	HOUSING, TIMING PIN	1	
11	1241 284 H2	O-RING	1	
12	1241 282 H2	GASKET, GEAR COVER	1	
	1241 214 H1	KIT, OIL SEAL - FRONT	1	F1
13	(NSS)	· SEAL, OIL - FRONT	1	
14	1278 592 H1	COVER, GEAR	1	
15	1241 110 H1	BOLT	4	
16	1278 593 H2	GASKET, GEAR HOUSING	1	
17	1240 383 H1	BOLT	2	
18	1241 247 H92	HOUSING, GEAR	1	
19	1241 272 H1	GASKET, ACCESSORY DRIVE COVER	1	
20	1241 225 H1	COVER, ACCESSORY DRIVE	1	
21	1240 173 H1	BOLT	2	
N/I	(NSS)	DATAPLATE	1	
	1240 834 H1	SCREW, DRIVE	2	
		F1 - INCLUDES INSTALLATION TOOLS		

FIG E2AO614T.001 **OIL PAN**

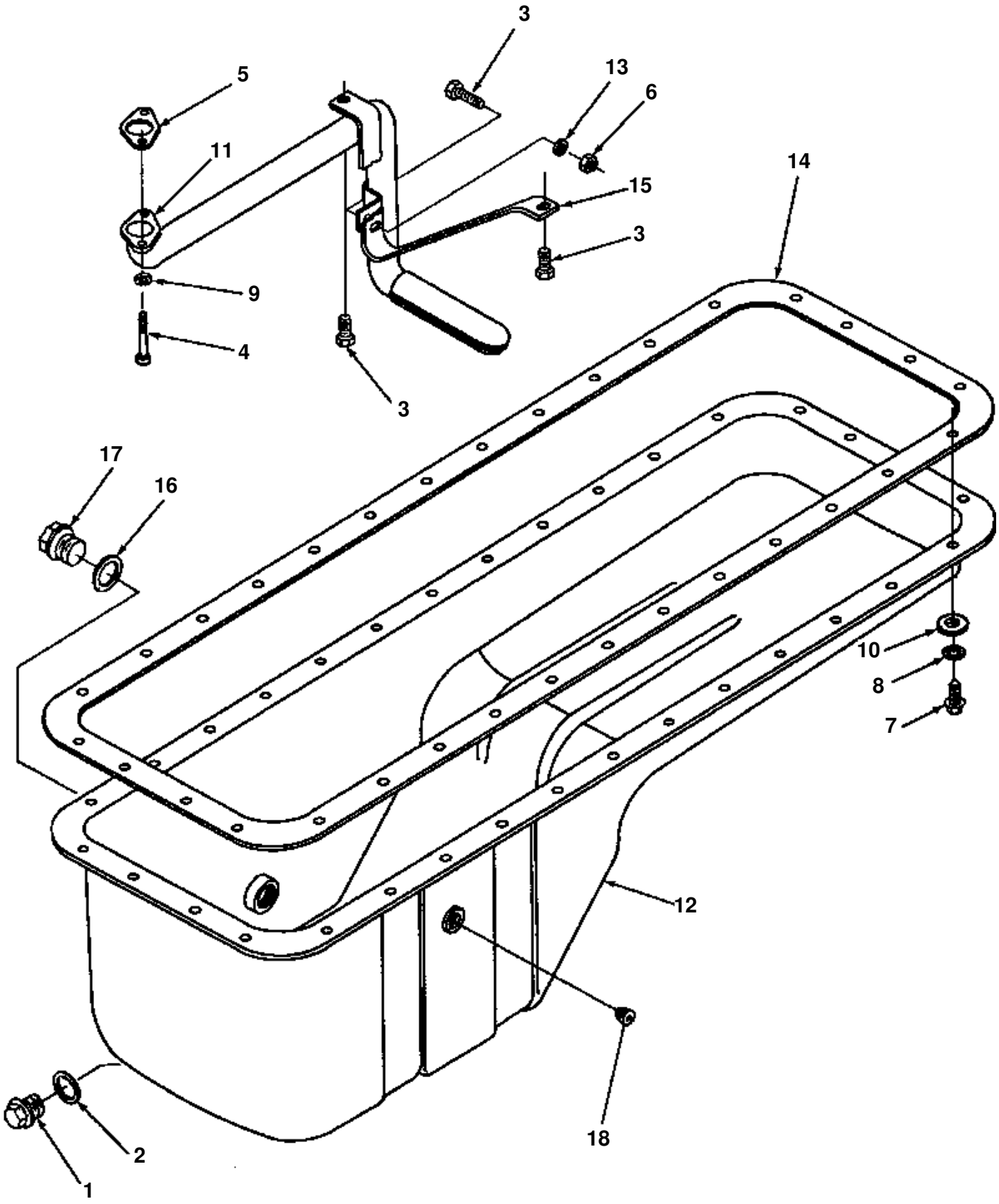

OIL PAN

ITEM NO.	PART NO.	DESCRIPTION	Q'TY
1	1277 892 H1	PLUG, OIL PAN DRAIN	1
2	1240 123 H1	WASHER, SEALING	1
3	1241 151 H1	BOLT	3
4	1241 109 H1	BOLT	2
5	1277 893 H1	GASKET, CONNECTION	1
6	1241 000 H1	NUT, HEX	1
7	1240 818 H1	BOLT	32
8	1241 229 H1	WASHER, SPRING	32
9	1241 130 H1	SPACER, MOUNTING	2
10	1241 215 H1	WASHER, PLAIN	32
11	1241 237 H1	CONNECTION, OIL SUCTION	1
12	1294 832 H1	PAN, OIL	1
13	1241 239 H1	WASHER, PLAIN	1
14	1277 894 H1	GASKET, OIL PAN	1
15	1241 280 H1	BRACE, SUCTION TUBE	1
16	1240 197 H1	WASHER, SEALING	1
17	1240 255 H1	PLUG, THREADED	1
18	1239 300 H1	PLUG, PIPE	1

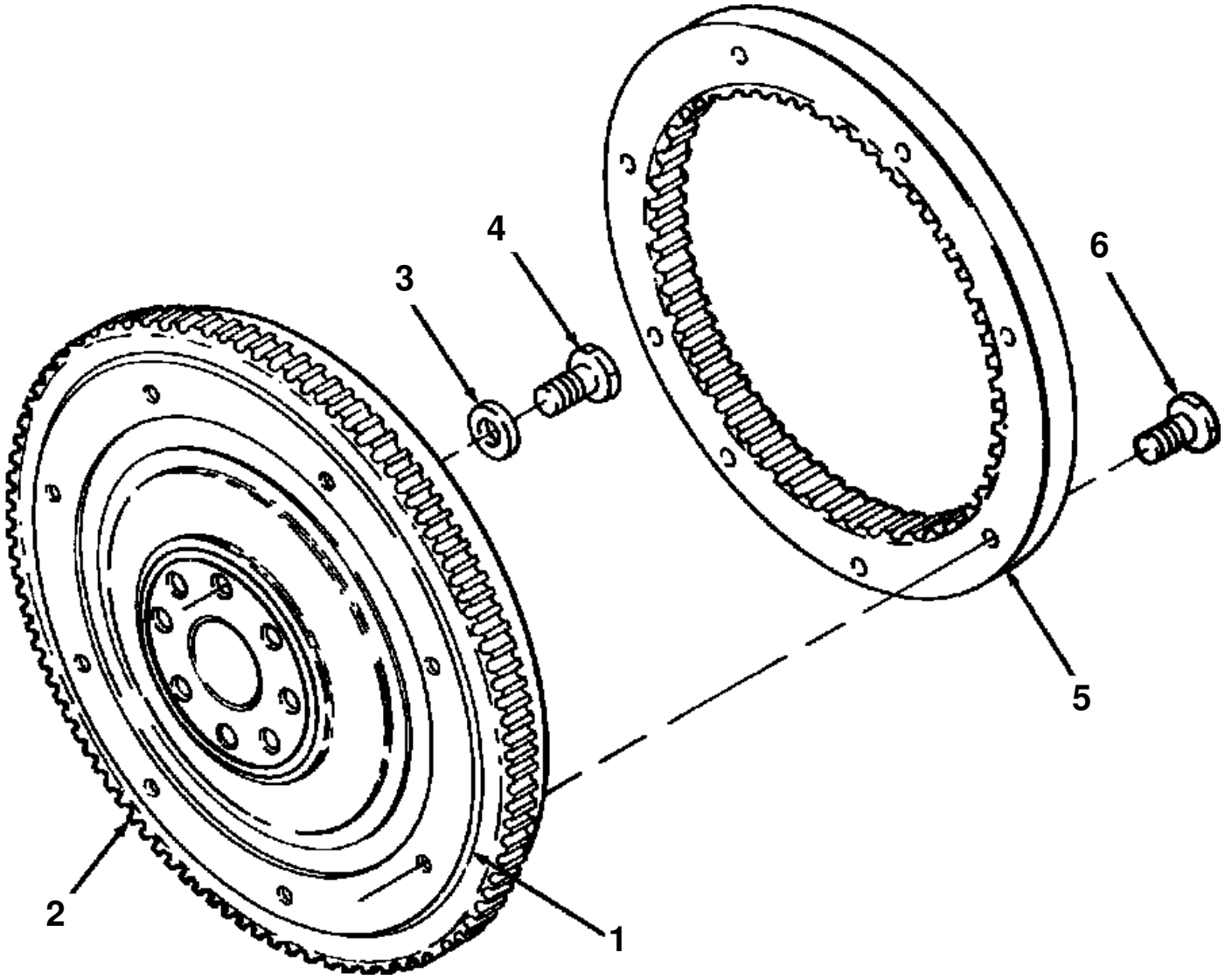
1
2
3
4
5
6

FLYWHEEL

ITEM NO.	PART NO.	DESCRIPTION	Q'TY
	1294 338 H91	FLYWHEEL ASSEMBLY	1
1	(NSS)	· FLYWHEEL	1
2	1240 345 H1	· GEAR, RING	1
3	1240 130 H1	WASHER, PLAIN	8
4	1240 179 H1	BOLT	8
5	1294 337 H1	ADAPTER, SPLINE	1
6	1294 336 H1	BOLT	6

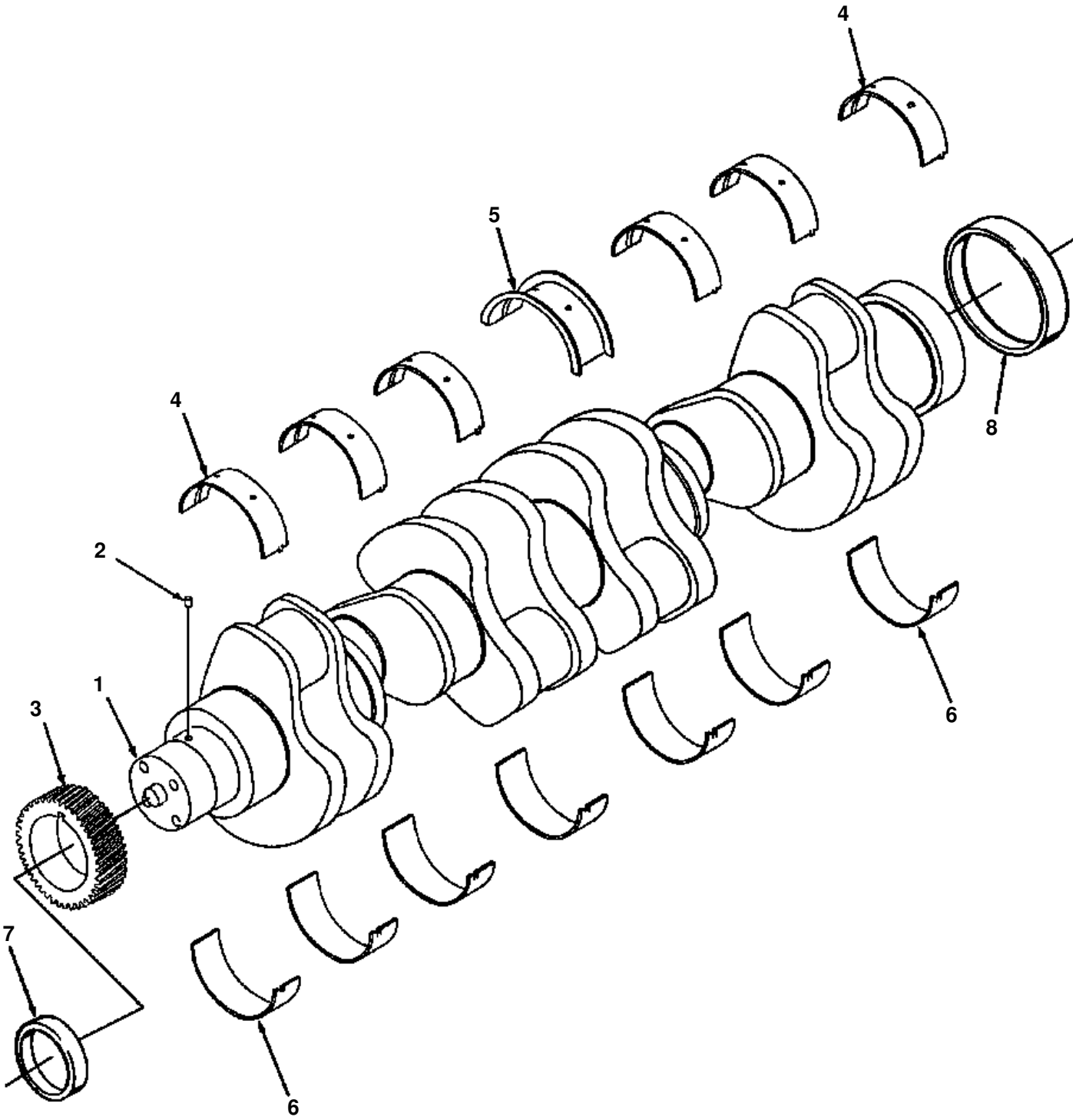
4
5
4
8
2
1
3
6
7
6

CRANKSHAFT

ITEM NO.	PART NO.	DESCRIPTION	Q'TY
	1240 968 H93	CRANKSHAFT ASSEMBLY	1
1	(NSS)	· CRANKSHAFT	1
2	1240 259 H1	· PIN, DOWEL	1
3	1241 064 H3	· GEAR, CRANKSHAFT	1
N/I	1241 184 H2	KIT, MAIN BEARING - STD	1
4	(NSS)	· BEARING, MAIN UPPER	6
5	(NSS)	· BEARING, MAIN THRUST	1
6	(NSS)	· BEARING, MAIN LOWER	7
N/I	1294 793 H91	KIT, MAIN BEARING - 0.25MM OVERSIZE	1
4	(NSS)	· BEARING, MAIN UPPER	6
5	(NSS)	· BEARING, MAIN THRUST	1
6	(NSS)	· BEARING, MAIN LOWER	7
N/I	1294 794 H91	KIT, MAIN BEARING - 0.50MM OVERSIZE	1
4	(NSS)	· BEARING, MAIN UPPER	6
5	(NSS)	· BEARING, MAIN THRUST	1
6	(NSS)	· BEARING, MAIN LOWER	7
N/I	1294 795 H91	KIT, MAIN BEARING - 0.75MM OVERSIZE	1
4	(NSS)	· BEARING, MAIN UPPER	6
5	(NSS)	· BEARING, MAIN THRUST	1
6	(NSS)	· BEARING, MAIN LOWER	7
N/I	1294 796 H91	KIT, MAIN BEARING - 1.00MM OVERSIZE	1
4	(NSS)	· BEARING, MAIN UPPER	6
5	(NSS)	· BEARING, MAIN THRUST	1
6	(NSS)	· BEARING, MAIN LOWER	7
7	1295 465 H92	SLEEVE, WEAR - FRONT CRANK	1
8	1240 762 H1	SLEEVE, WEAR - REAR CRANK	1

FIG E2AW614T.001 VIBRATION DAMPER

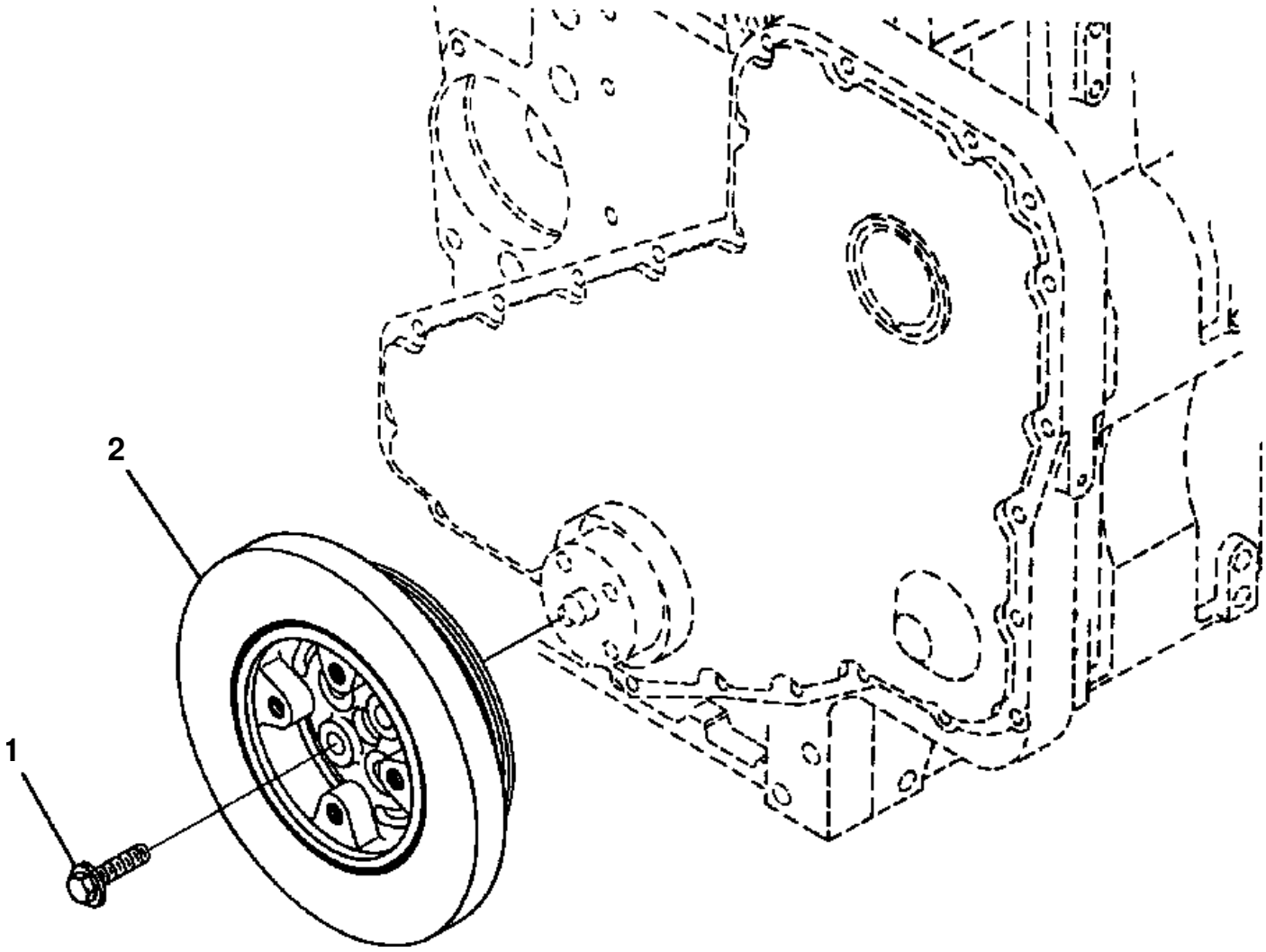

VIBRATION DAMPER

ITEM NO.	PART NO.	DESCRIPTION	Q'TY
1	1241 029 H1	BOLT	4
2	1295 000 H2	DAMPER, VIBRATION	1

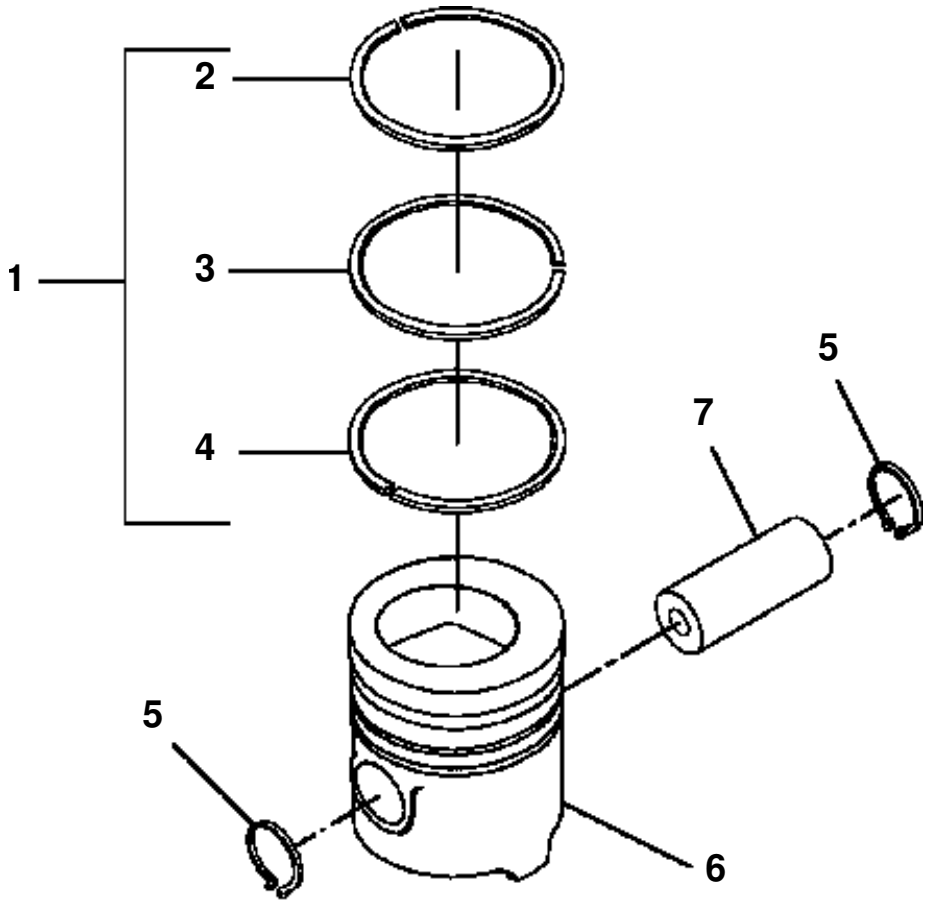
1
2
3
4
5
5
6
7

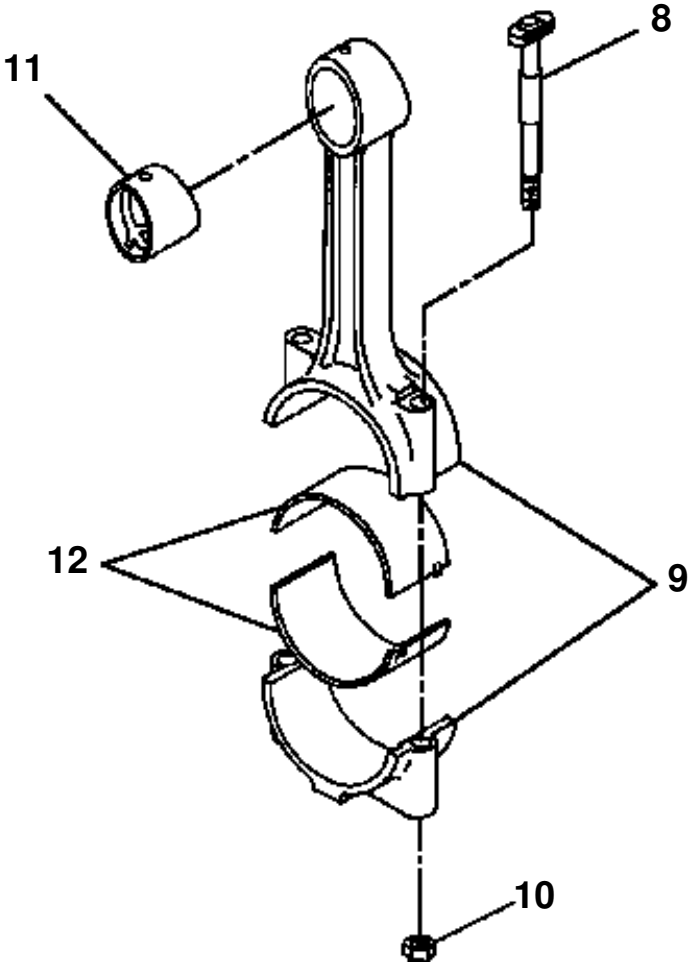
8
9
10
11
12

PISTON & CONNECTING ROD

ITEM NO.	PART NO.	DESCRIPTION	Q'TY
	1295 562 H91	KIT, ENGINE PISTON	6
1	1241 180 H1	· SET, PISTON RING	1
2	(NSS)	· · RING, PISTON - TOP	1
3	(NSS)	· · RING, PISTON - MIDDLE	1
4	(NSS)	· · RING, PISTON - OIL	1
5	1270 034 H1	· RING, RETAINING	2
6	(NSS)	· PISTON, ENGINE	1
7	1240 925 H1	PIN, PISTON	6
	1240 906 H91	ROD, ENGINE CONNECTING	6
8	1240 903 H1	· BOLT, CONNECTING ROD	2
9	(NSS)	· ROD, CONNECTING	1
10	1240 904 H1	· NUT, HEX	2
11	1294 833 H1	· BUSHING	1
12	1240 913 H1	BEARING, ROD HALF - STD	12
	1240 914 H1	BEARING, ROD HALF - 0.25MM OVERSIZE	12
	1240 915 H1	BEARING, ROD HALF - 0.50MM OVERSIZE	12
	1240 916 H1	BEARING, ROD HALF - 0.75MM OVERSIZE	12
	1240 917 H1	BEARING, ROD HALF - 1.00MM OVERSIZE	12

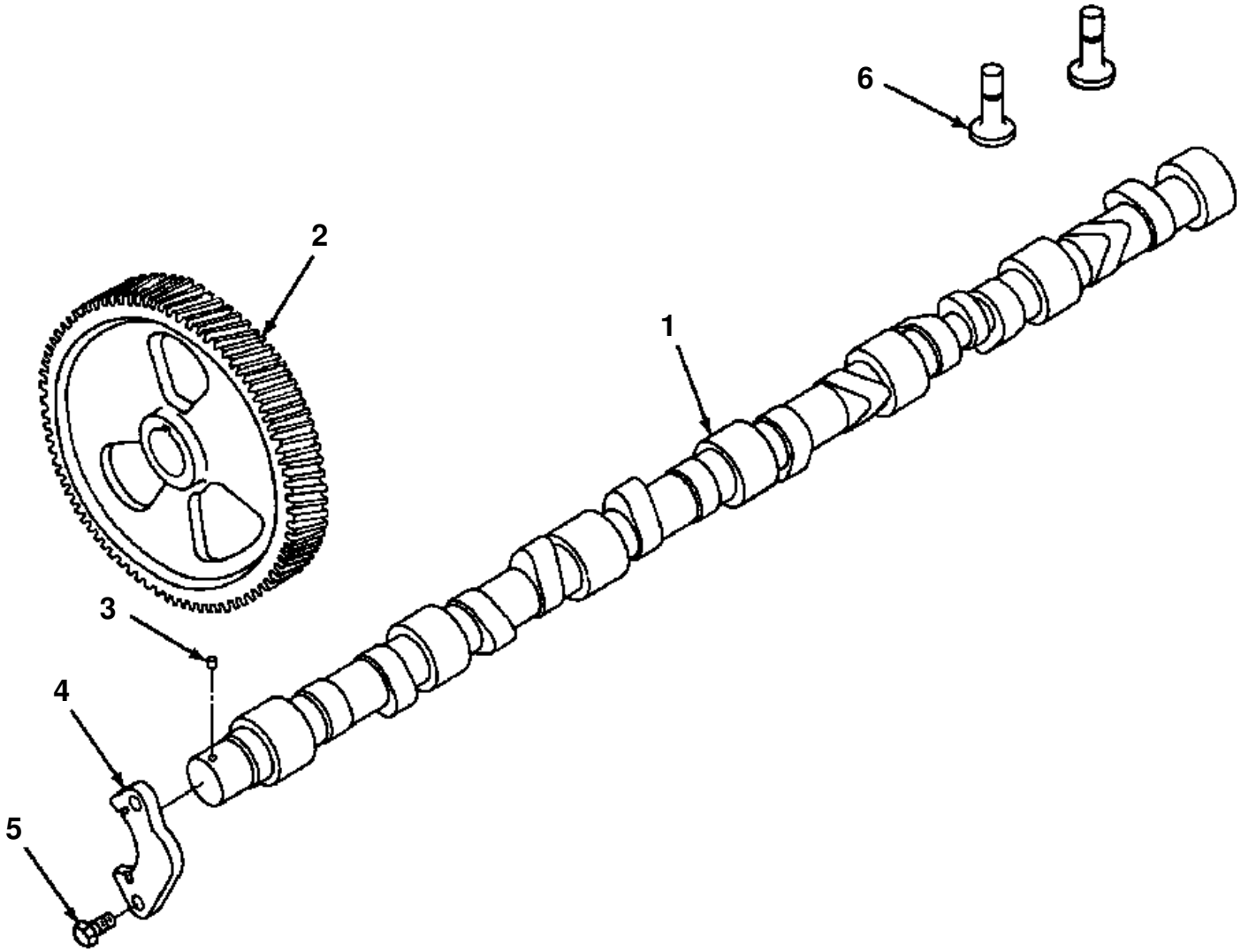
6
2
1
3
4
5

CAMSHAFT

ITEM NO.	PART NO.	DESCRIPTION	Q'TY	REF
1	1278 467 H2	CAMSHAFT	1	F1
2	1241 067 H2	GEAR, CAMSHAFT	1	
3	1240 193 H1	KEY, PLAIN WOODRUFF (CURRENT)	1	
	1240 971 H1	PIN, DOWEL (PREVIOUS)	1	
4	1278 466 H1	SUPPORT, CAMSHAFT	1	
5	1240 412 H1	BOLT	2	
6	1240 377 H2	TAPPET, VALVE	12	
		F1 - WHEN REPLACING OLD STYLE CAMSHAFT USING DOWEL PIN - ALSO ORDER 1240 193 H1 PLAIN WOODRUFF KEY		

FIG E2BI614T.001 **OIL FILL LOCATION**

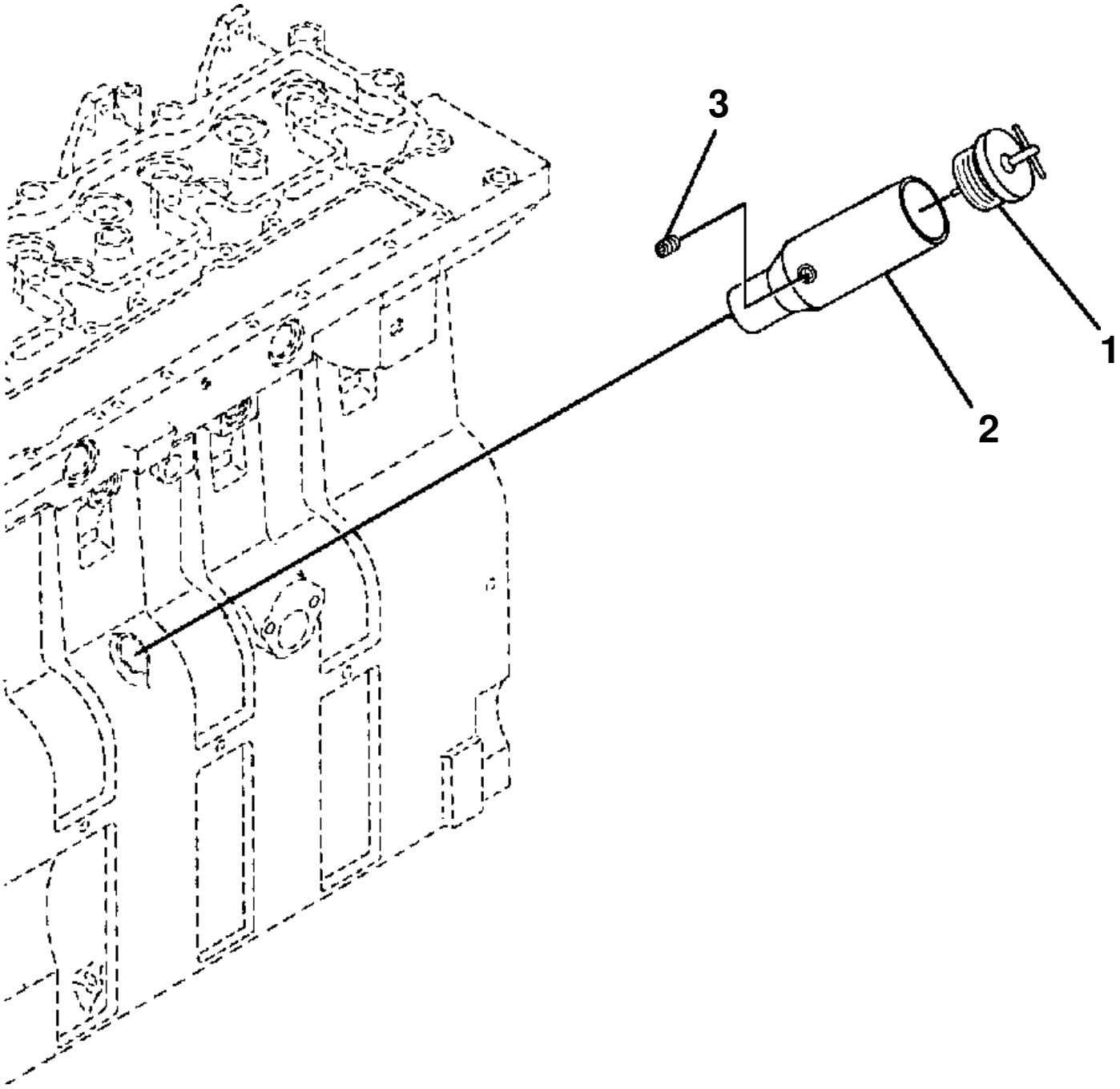

OIL FILL LOCATION

ITEM NO.	PART NO.	DESCRIPTION	Q'TY
1	1240 099 H1	CAP, FILLER - OIL	1
2	1295 009 H2	TUBE, OIL FILL	1
3	1239 300 H1	PLUG, PIPE	1

FIG E2BO614T.001 **OIL LEVEL GAUGE**

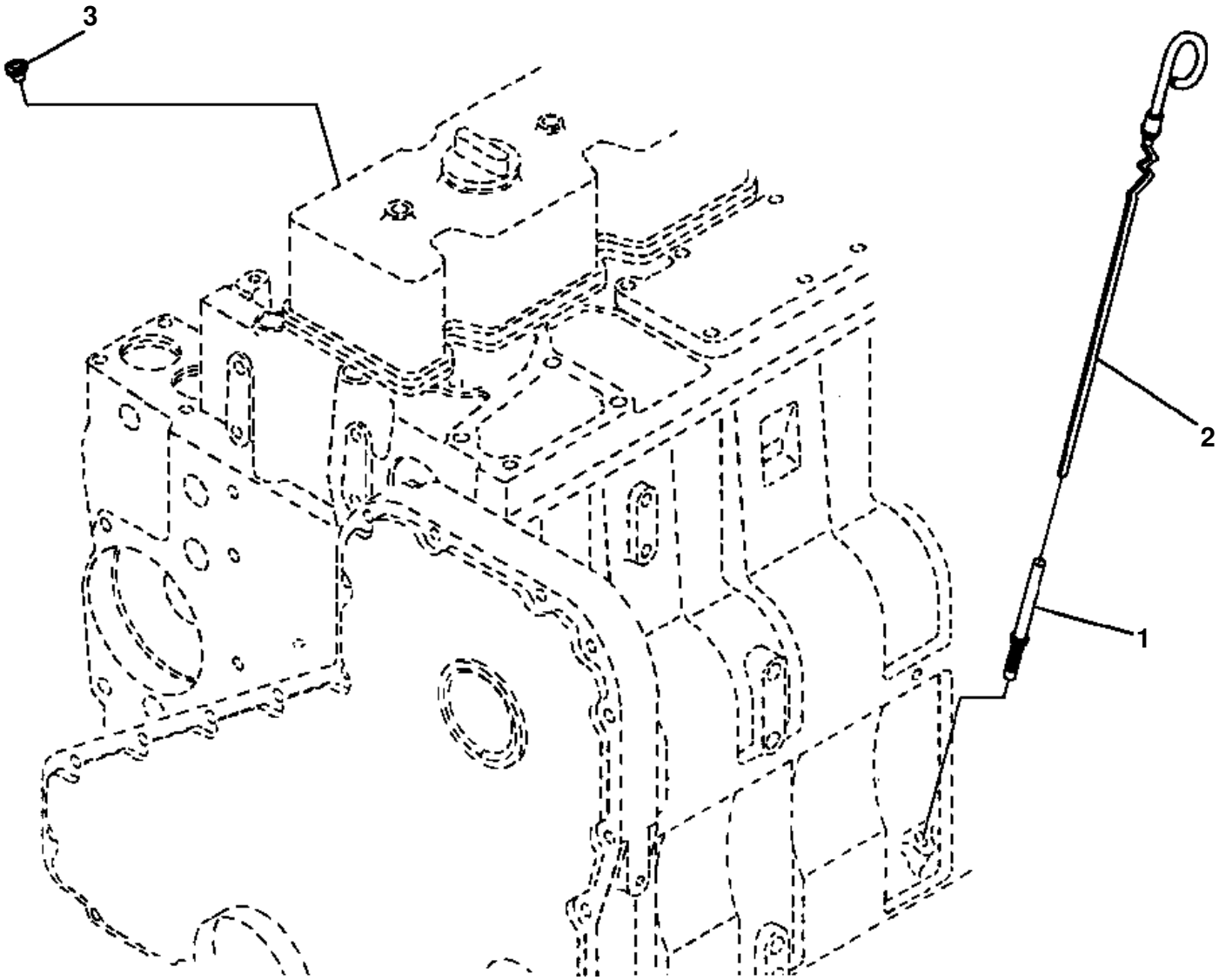

OIL LEVEL GAUGE

ITEM NO.	PART NO.	DESCRIPTION	Q'TY
1	1240 991 H1	TUBE, OIL GAUGE	1
2	1241 222 H1	DIPSTICK	1
3	1240 151 H1	PLUG, EXPANSION	1

LUBRICATING OIL SYSTEM

DESCRIPTION
LUBE OIL PUMP LUBE OIL COOLER

FIG E3AC614T.001 LUBE OIL PUMP

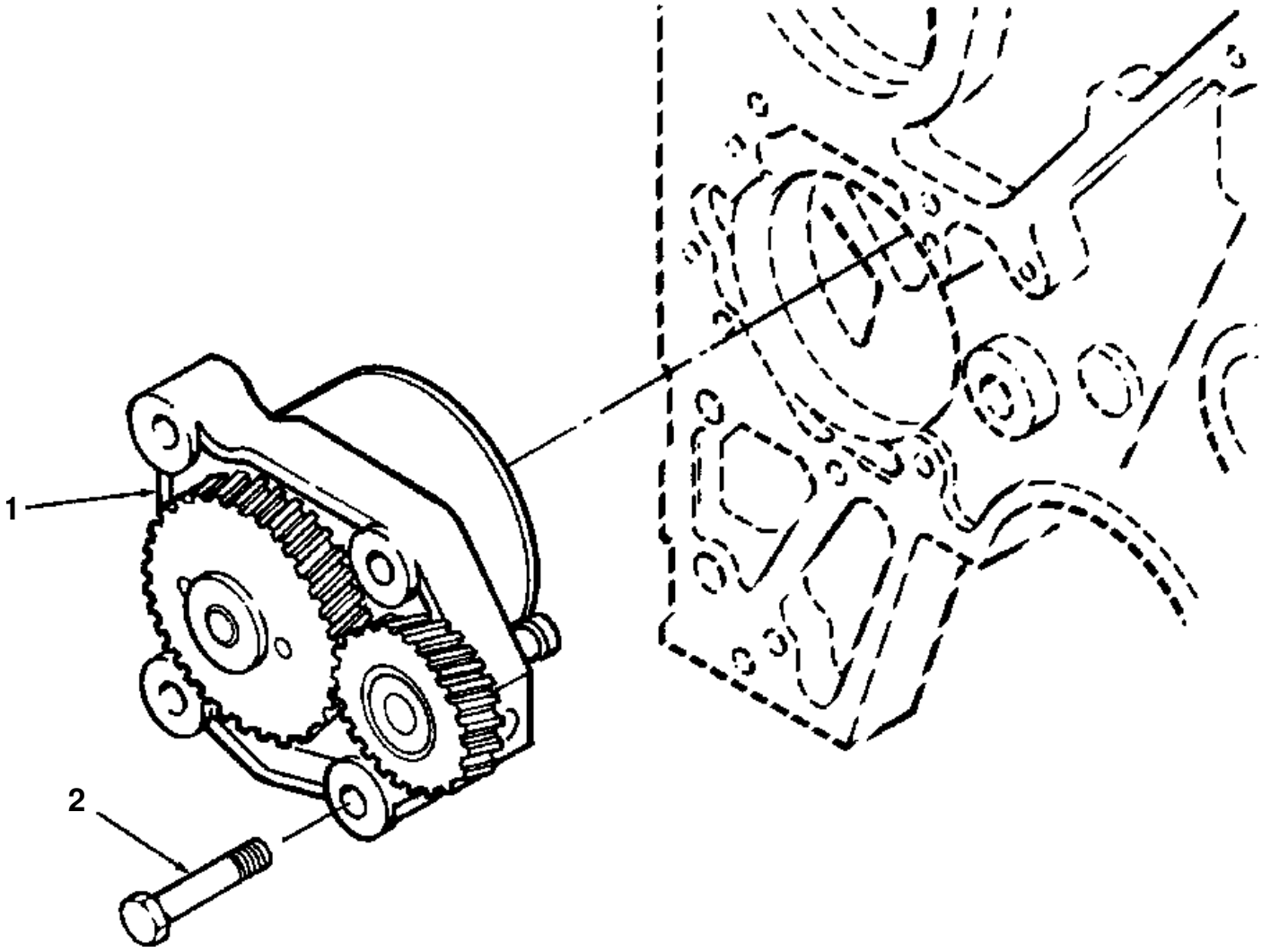

LUBE OIL PUMP

ITEM NO.	PART NO.	DESCRIPTION	Q'TY
	1242 039 H91	KIT, LUBE OIL PUMP	1
1	(NSS)	· PUMP, LUBE OIL	1
	1294 829 H1	· PLUNGER, PRESSURE REGULATOR	1
2	1240 145 H1	BOLT	4

FIG E3AL614T.002 **LUBE OIL COOLER**

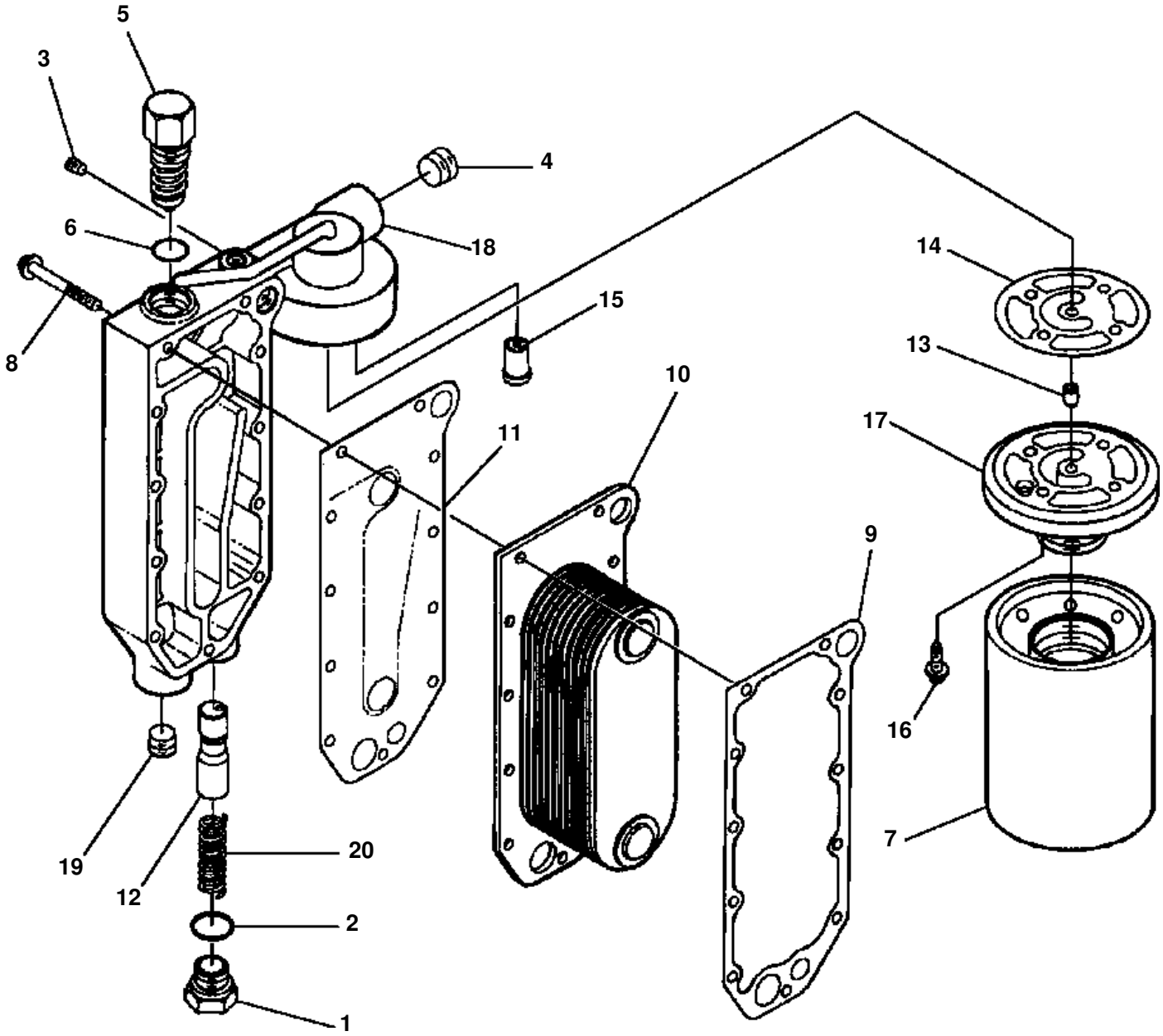

LUBE OIL COOLER

ITEM NO.	PART NO.	DESCRIPTION	Q'TY
1	1295 153 H91	PLUG, THREADED W/O-RING	1
2	1295 154 H1	· O-RING	1
3	1240 101 H1	PLUG, PIPE	2
4	1239 160 H1	PLUG, PIPE	1
5	1295 151 H92	THERMOSTAT	1
6	1295 152 H1	· O-RING	1
7	1295 155 H1	ELEMENT, LUBE OIL FILTER	1
8	1295 146 H1	BOLT	11
9	1241 216 H2	GASKET, OIL COOLER CORE	1
10	1241 004 H2	CORE, LUBE OIL COOLER	1
11	1295 147 H1	GASKET, LUBE OIL COOLER COVER	1
12	1294 829 H1	PLUNGER, PRESSURE REGULATOR	1
13	1238 209 H1	DOWEL, PIN	1
14	1295 148 H2	GASKET, FILTER HEAD	1
15	1240 194 H1	VALVE, BYPASS	1
16	1240 818 H1	BOLT	4
17	1295 149 H1	HEAD, LUBE OIL FILTER	1
18	1295 150 H2	COVER, LUBE OIL COOLER	1
19	1295 176 H1	PLUG, PIPE	1
20	1241 100 H1	SPRING, COMPRESSION	1

FUEL SYSTEM

DESCRIPTION
FUEL PIPING FUEL FILTER FUEL PUMP FUEL LIFT PUMP FUEL PUMP COUPLING FUEL INJECTOR

FIG E4AC614T.001 FUEL PIPING

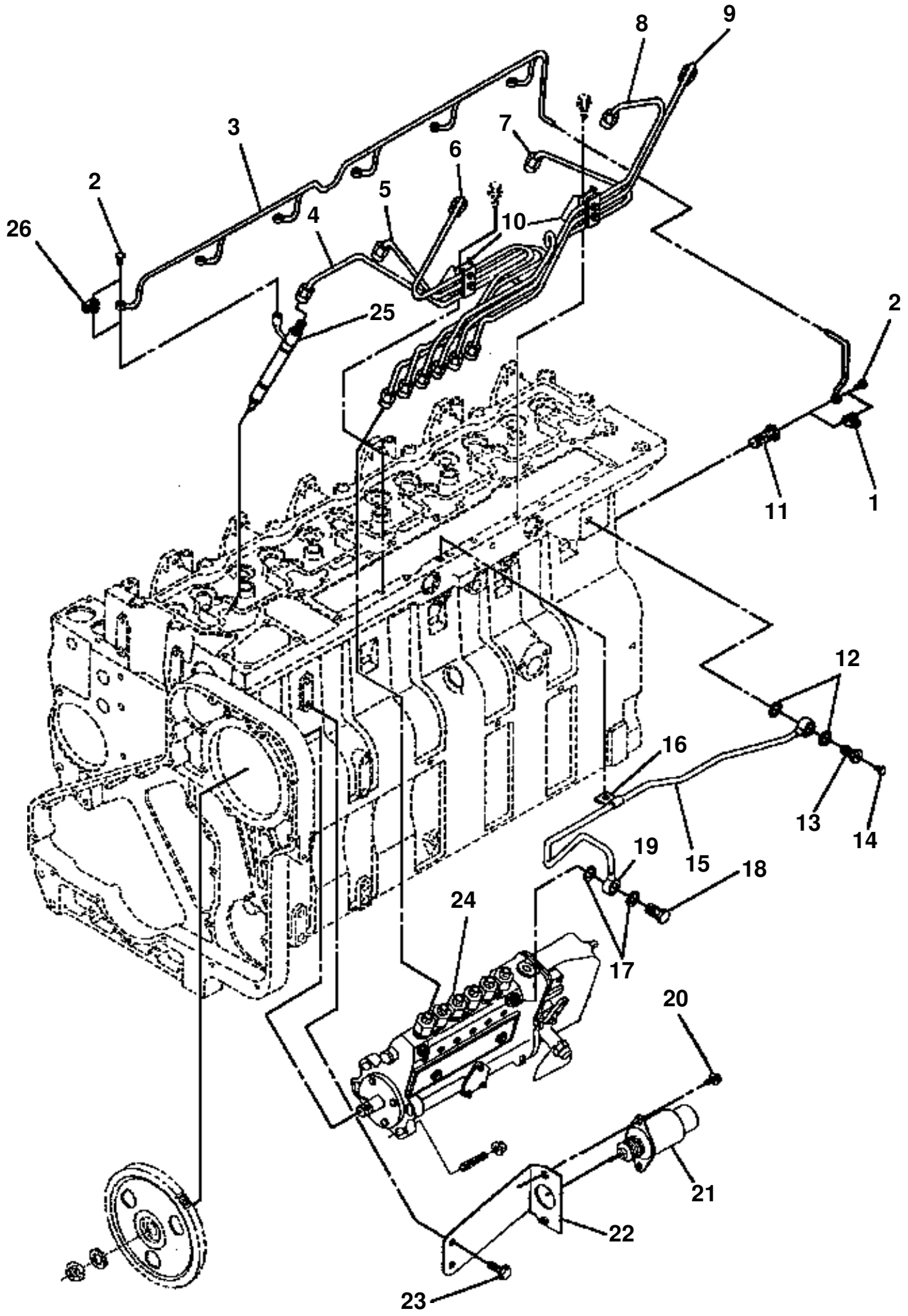

FUEL PIPING

ITEM NO.	PART NO.	DESCRIPTION	Q'TY
1	1240 215 H1	SEAL, BANJO CONNECTOR	1
2	1240 334 H1	SCREW, BANJO CONNECTOR	7
3	1270 368 H91	MANIFOLD, FUEL	1
4	1241 038 H1	TUBE, FUEL SUPPLY - CYLINDER NO. 1	1
5	1241 039 H1	TUBE, FUEL SUPPLY - CYLINDER NO. 2	1
6	1241 040 H1	TUBE, FUEL SUPPLY - CYLINDER NO. 3	1
7	1241 235 H1	TUBE, FUEL SUPPLY - CYLINDER NO. 4	1
8	1241 042 H1	TUBE, FUEL SUPPLY - CYLINDER NO. 5	1
9	1241 043 H1	TUBE, FUEL SUPPLY - CYLINDER NO. 6	1
10	1240 769 H1	BRACE, TUBE	2
	1240 260 H1	CLAMP, TUBE BRACE	2
	1270 369 H1	ISOLATOR, VIBRATION	4
	1240 225 H1	BOLT	4
	1240 227 H1	WASHER, PLAIN	4
11		SCREW, BANJO CONNECTOR (SEE PG E4-010)	
12	1240 203 H1	WASHER, PLAIN	2
	1240 740 H1	SCREW ASSY, BANJO CONNECTOR	1
13	1241 244 H1	· SCREW, BANJO CONNECTOR	1
14	(NSS)	· BOLT W/WASHER	1
15	1241 270 H1	TUBE, FUEL SUPPLY	1
16	1294 806 H1	CLIP	1
17	1294 807 H1	WASHER, PLAIN	2
18	1241 204 H2	SCREW, BANJO CONNECTOR	1
19	1241 245 H1	FITTING, BANJO	1
20	1241 151 H1	BOLT	2
21	1259 511 H2	SOLENOID, FUEL PUMP - 24V	1
22	1280 607 H1	BRACKET, SOLENOID	1
23	1240 966 H1	BOLT	2
24		PUMP, FUEL (SEE PG E4-008)	
25		INJECTOR (SEE PG E4-012)	
26	1240 215 H1	SEAL, BANJO CONNECTOR	1

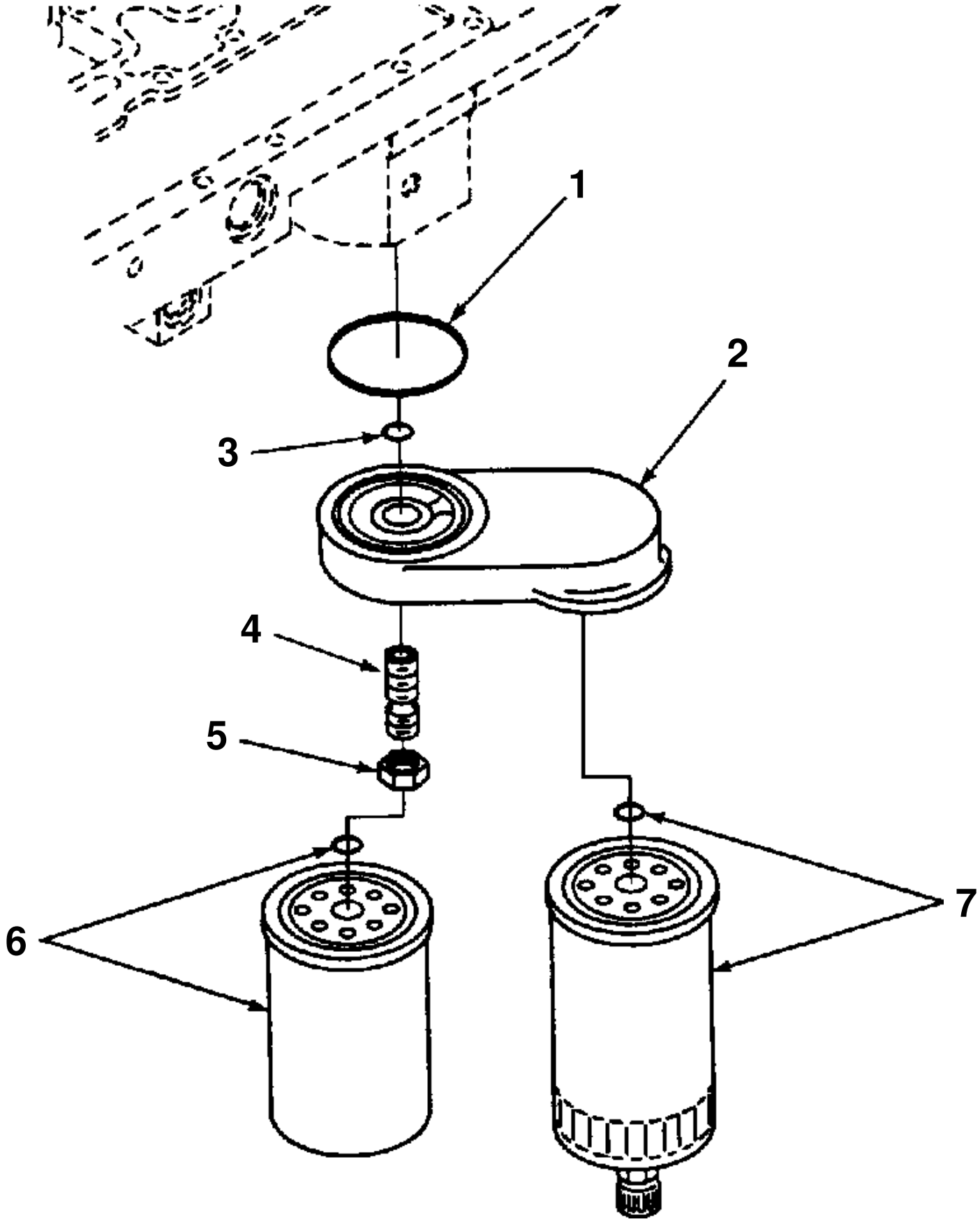
1
2
3
4
5
6
7

FUEL FILTER

ITEM NO.	PART NO.	DESCRIPTION	Q'TY
1	1240 773 H1	O-RING	1
2	1241 661 H91	HEAD ASSEMBLY, FUEL FILTER	1
3	1240 774 H1	O-RING	1
4	1240 235 H1	ADAPTER, FILTER HEAD	1
5	1240 212 H1	NUT, HEX	1
6	161 624	FILTER, FUEL	1
7	161 623	FILTER, FUEL	1

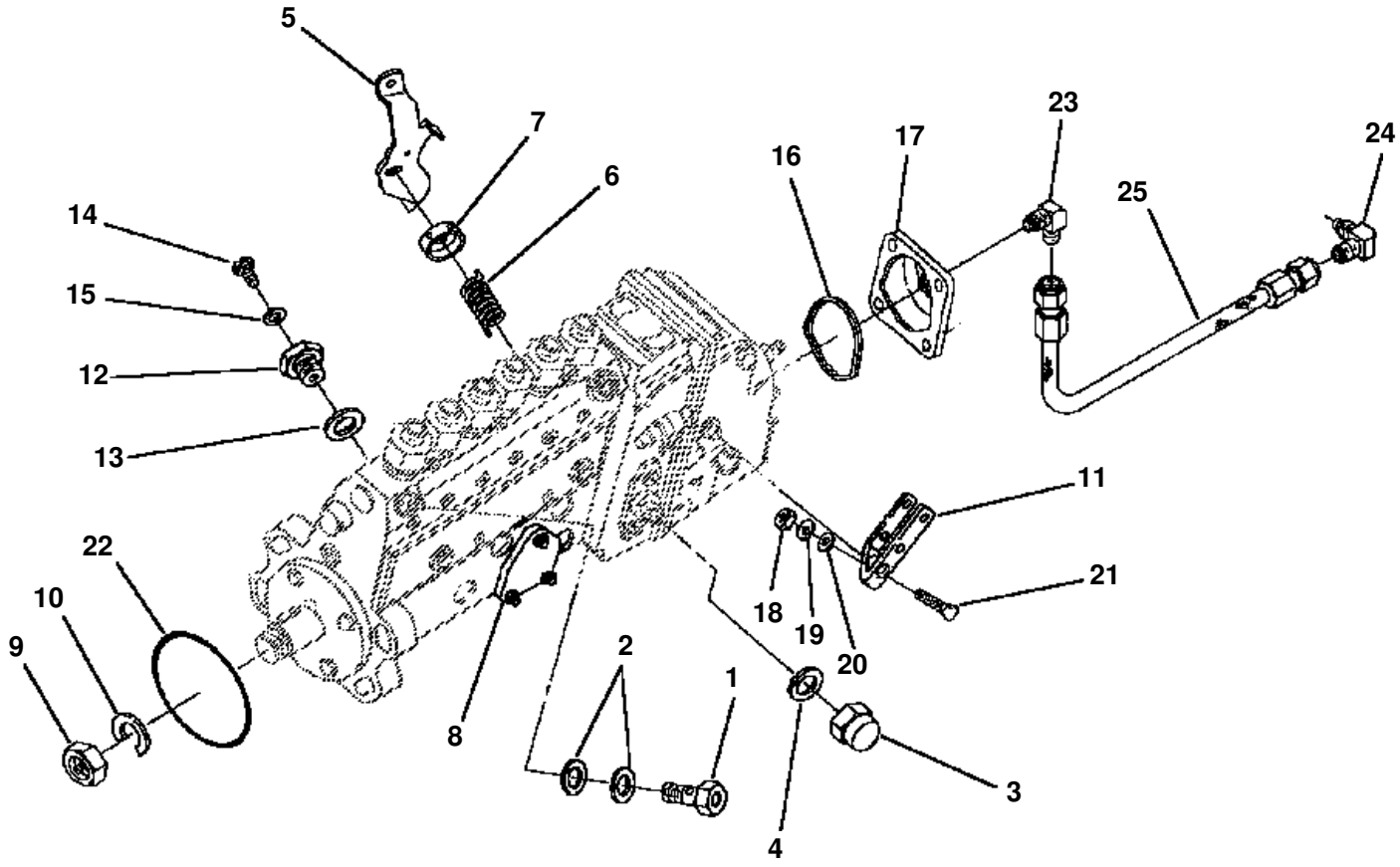
5
7
6
14
15
12
13
22
10
9
8
2
1
4
3
16
17
23
24
25
11
21
18
19
20

FUEL PUMP

ITEM NO.	PART NO.	DESCRIPTION	Q'TY
1	1295 008 H92	PUMP, FUEL	1
	1241 260 H1	· VALVE, OVERFLOW	1
2	1241 261 H1	· WASHER, SEALING	2
3	1241 262 H1	· PLUG, TIMING	1
4	1241 263 H1	· WASHER, SEALING	1
5	1241 240 H1	· LEVER, SHUTOFF VALVE	1
6	1241 264 H1	· SPRING, SHUTOFF	1
7	1241 265 H1	· HOUSING, RETURN SPRING	1
8	1241 266 H1	· GASKET, FEED PUMP COVER	1
9	1241 267 H1	· NUT, GEAR RETAINING	1
10	1241 268 H1	· WASHER, LOCK	1
11	1241 275 H1	· LEVER, CONTROL	1
12	1295 657 H1	· SCREW, VENT	1
13	1295 658 H1	· WASHER, SEALING	1
14	1295 659 H1	· SCREW, VENT	1
15	1295 660 H1	· WASHER, SEALING	1
16	1283 365 H1	· SEAL, RECTANGULAR RING	1
17	1283 363 H1	· COVER, FUEL PUMP	1
18	1296 799 H1	· NUT, HEXAGON	1
19	1240 796 H1	· LOCKWASHER	1
20	1296 800 H1	· WASHER, FLAT	1
21	1307 345 HI	· SCREW	1
22	1241 233 H1	· O-RING	1
23	1240 010 H1	· ELBOW, MALE ADAPTER	1
24	1283 364 H1	· ELBOW, MALE ADAPTER	1
25	1241 126 H1	· HOSE, FLEXIBLE	1

FIG E4BO614T.001 **FUEL LIFT PUMP**

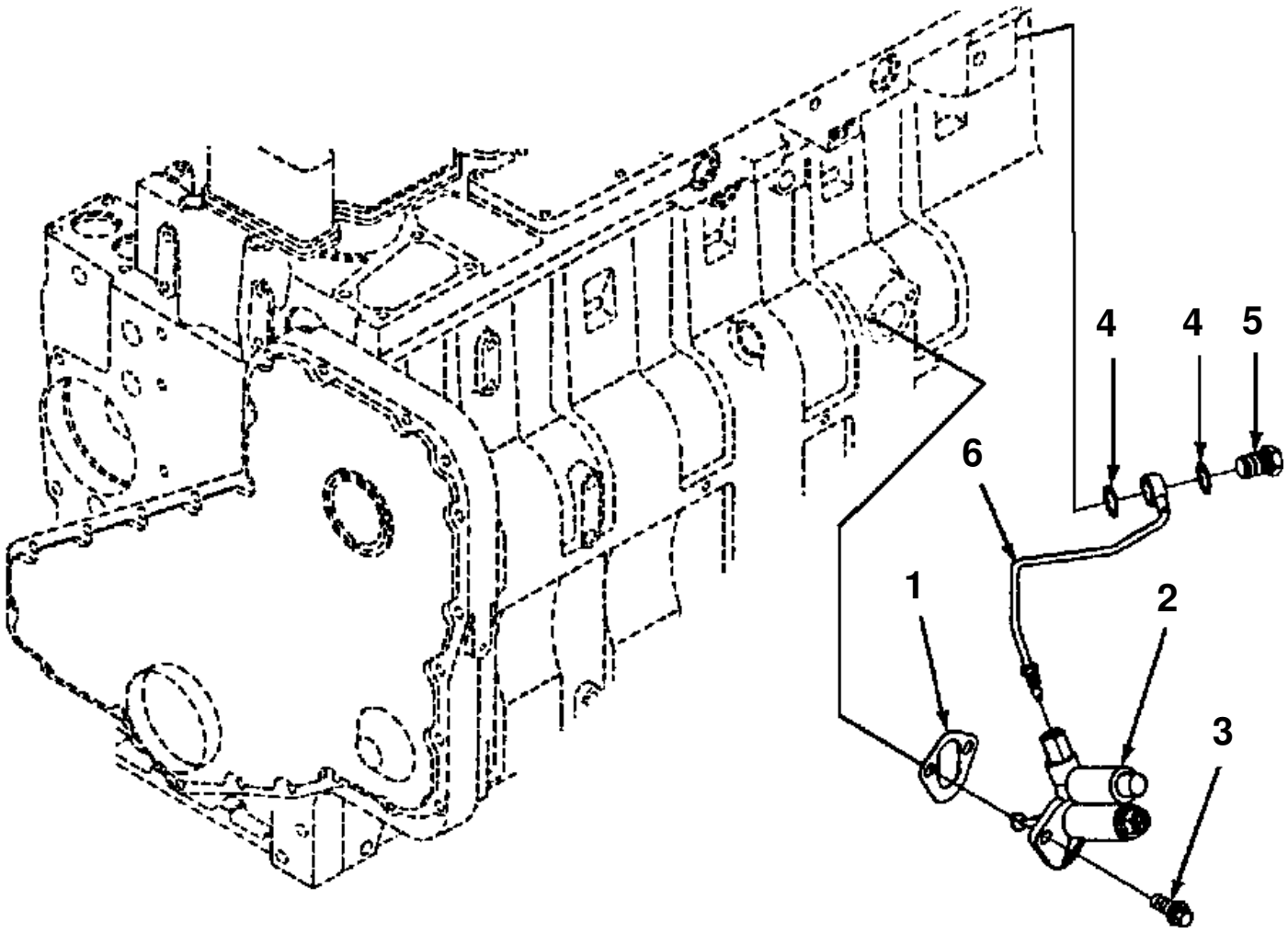

FUEL LIFT PUMP

ITEM NO.	PART NO.	DESCRIPTION	Q'TY
1	1241 286 H1	GASKET, COVER PLATE	1
2	1294 810 H1	PUMP, FUEL TRANSFER	1
3	1240 141 H1	BOLT	2
4	1294 334 H1	WASHER, SEALING	2
5	1241 244 H1	SCREW, BANJO CONNECTOR	1
6	1241 045 H1	TUBE, FUEL SUPPLY	1
N/I	1239 158 H1	PLUG, PIPE	1

FIG E4BR614T.001 **FUEL PUMP COUPLING**

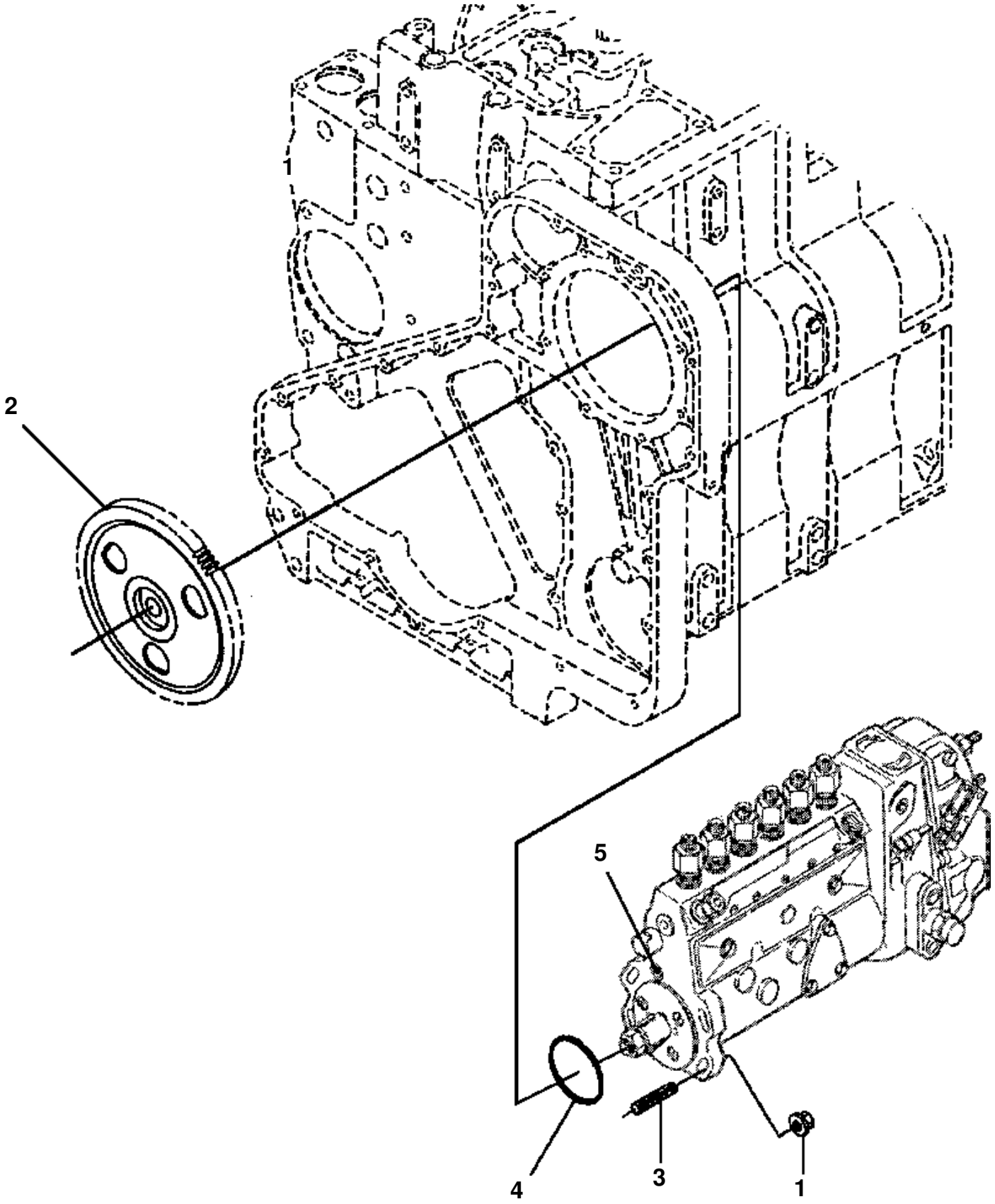

FUEL PUMP COUPLING

ITEM NO.	PART NO.	DESCRIPTION	Q'TY
1	1240 960 H1	NUT, HEX	4
2	1241 255 H1	GEAR, FUEL PUMP	1
3	1294 809 H1	STUD	4
4	1241 233 H1	O-RING	1
5	1241 232 H2	O-RING	1

FIG E4AL614T.001 FUEL INJECTOR

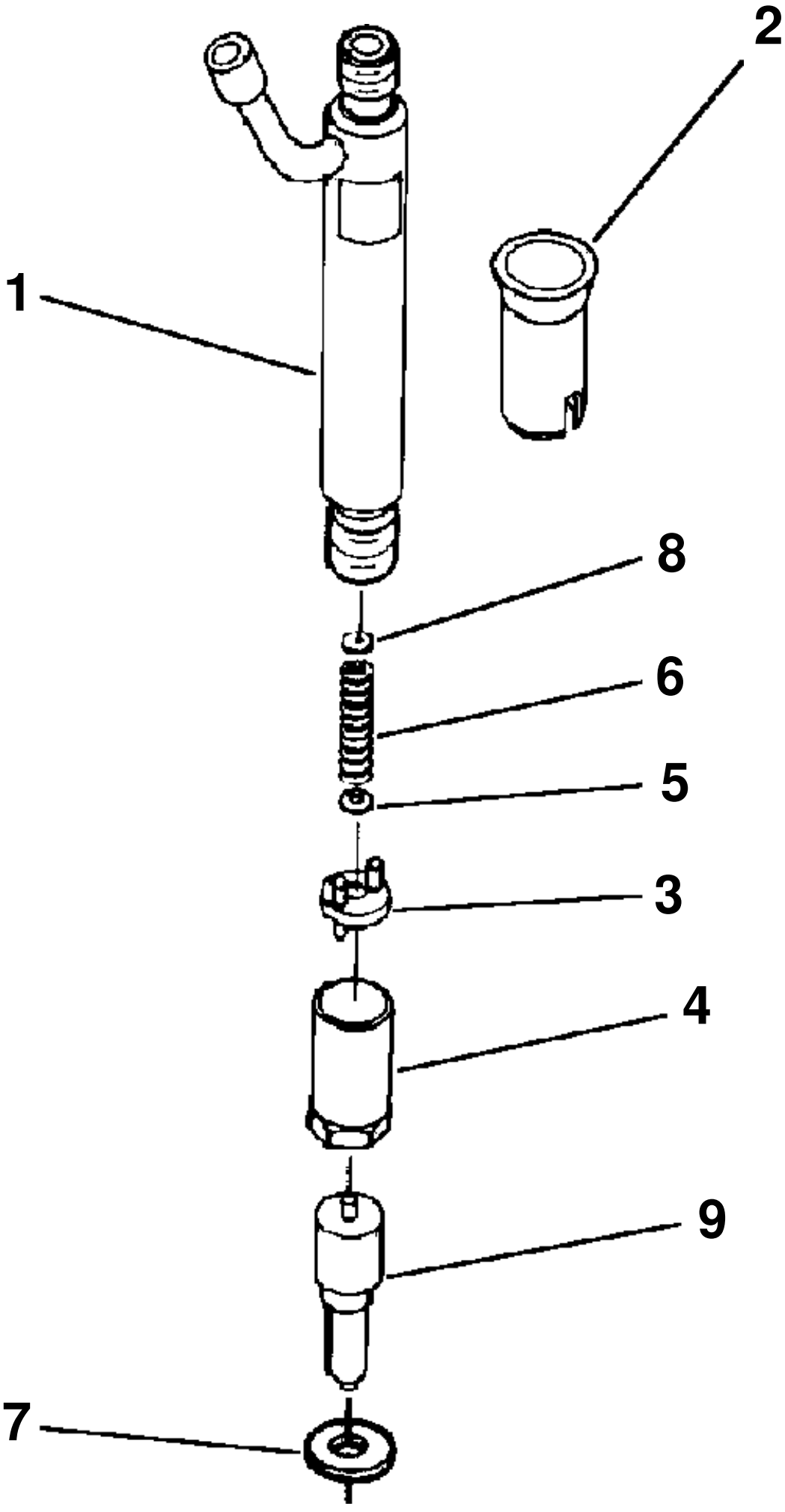

FUEL INJECTOR

ITEM NO.	PART NO.	DESCRIPTION	Q'TY
	1241 065 H91	INJECTOR, FUEL	6
1	(NSS)	· INJECTOR	1
2	1252 150 H1	· SEAL, INJECTOR	1
3	1240 301 H1	· DISC, INTERMEDIATE	1
4	1240 302 H1	· RETAINER, INJECTOR NOZZLE	1
5	1294 812 H1	· SPINDLE, INJECTOR	1
6	1296 801 H1	· SPRING, COMPRESSION	1
7	1241 019 H1	· SEAL, INJECTOR	1
8	1240 303 H1	SHIM, INJECTOR - 1.00 MM	A/R
	1240 304 H1	SHIM, INJECTOR - 1.04 MM	A/R
	1240 305 H1	SHIM, INJECTOR - 1.08 MM	A/R
	1240 306 H1	SHIM, INJECTOR - 1.10 MM	A/R
	1240 307 H1	SHIM, INJECTOR - 1.14 MM	A/R
	1240 308 H1	SHIM, INJECTOR - 1.18 MM	A/R
	1240 309 H1	SHIM, INJECTOR - 1.20 MM	A/R
	1240 310 H1	SHIM, INJECTOR - 1.24 MM	A/R
	1240 311 H1	SHIM, INJECTOR - 1.28 MM	A/R
	1240 312 H1	SHIM, INJECTOR - 1.30 MM	A/R
	1240 313 H1	SHIM, INJECTOR - 1.34 MM	A/R
	1240 314 H1	SHIM, INJECTOR - 1.38 MM	A/R
	1240 315 H1	SHIM, INJECTOR - 1.40 MM	A/R
	1240 316 H1	SHIM, INJECTOR - 1.44 MM	A/R
	1240 317 H1	SHIM, INJECTOR - 1.48 MM	A/R
	1240 318 H1	SHIM, INJECTOR - 1.50 MM	A/R
	1240 319 H1	SHIM, INJECTOR - 1.54 MM	A/R
	1240 320 H1	SHIM, INJECTOR - 1.58 MM	A/R
	1240 321 H1	SHIM, INJECTOR - 1.60 MM	A/R
	1240 322 H1	SHIM, INJECTOR - 1.64 MM	A/R
	1240 323 H1	SHIM, INJECTOR - 1.68 MM	A/R
	1240 324 H1	SHIM, INJECTOR - 1.70 MM	A/R
	1240 325 H1	SHIM, INJECTOR - 1.74 MM	A/R
	1240 326 H1	SHIM, INJECTOR - 1.76 MM	A/R
	1240 327 H1	SHIM, INJECTOR - 1.78 MM	A/R
	1240 328 H1	SHIM, INJECTOR - 1.80 MM	A/R
	1240 329 H1	SHIM, INJECTOR - 1.84 MM	A/R
	1240 330 H1	SHIM, INJECTOR - 1.88 MM	A/R
	1240 331 H1	SHIM, INJECTOR - 1.90 MM	A/R
	1240 332 H1	SHIM, INJECTOR - 1.94 MM	A/R
	1240 333 H1	SHIM, INJECTOR - 1.98 MM	A/R
9	1296 802 H1	NOZZLE, INJECTOR	6

COOLING SYSTEM

DESCRIPTION
WATER PUMP WATER INLET CONNECTION THERMOSTAT HOUSING FAN DRIVE ENGINE VENT CONNECTION

FIG E5AC614T.002 **WATER PUMP**

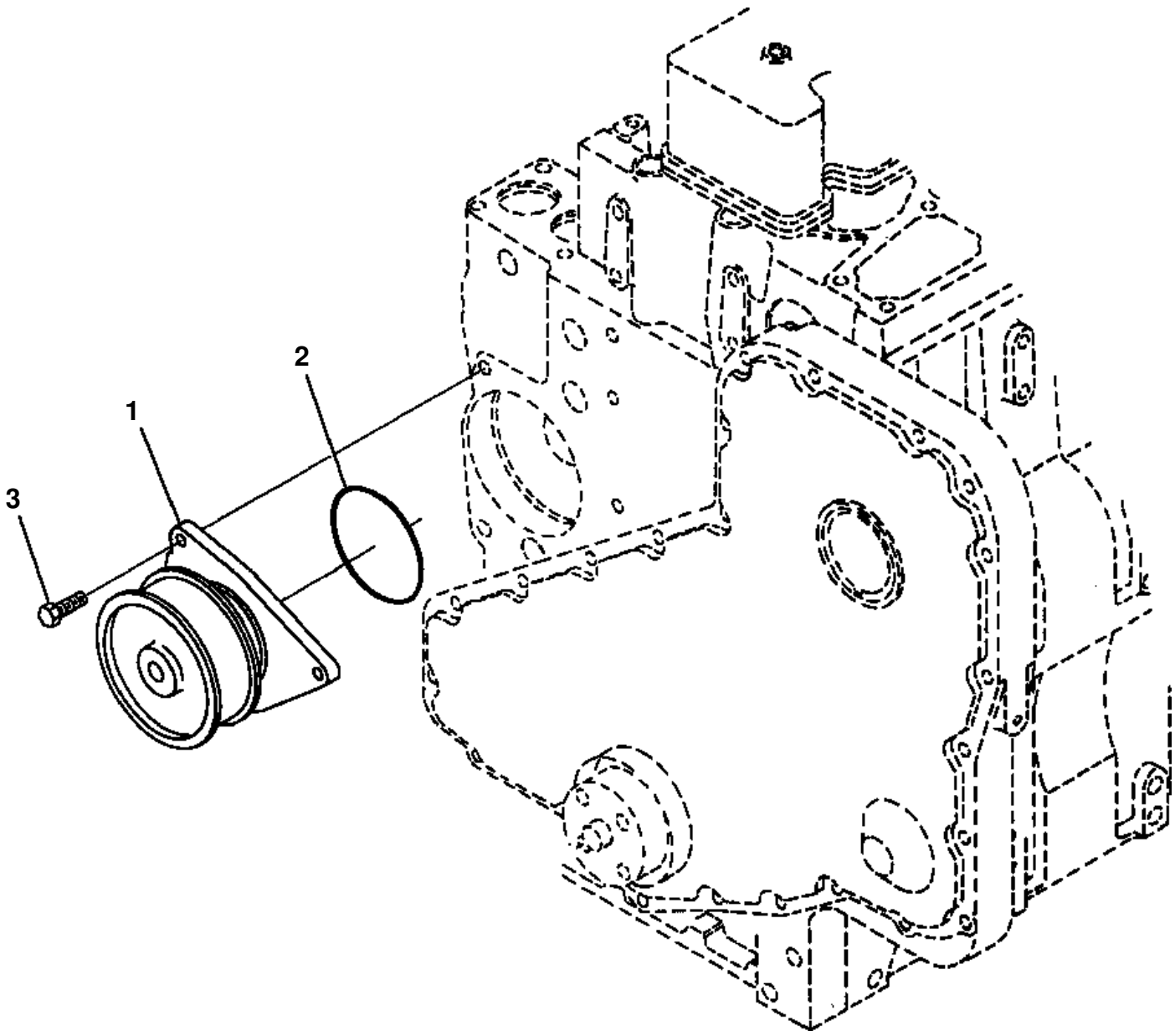

WATER PUMP

ITEM NO.	PART NO.	DESCRIPTION	Q'TY
	1295 446 H92	PUMP, WATER	1
1	(NSS)	・ BODY, WATER PUMP	1
2	1240 948 H1	O-RING	1
3	1296 714 H1	BOLT	2

FIG E5AF614T.001 WATER INLET CONNECTION

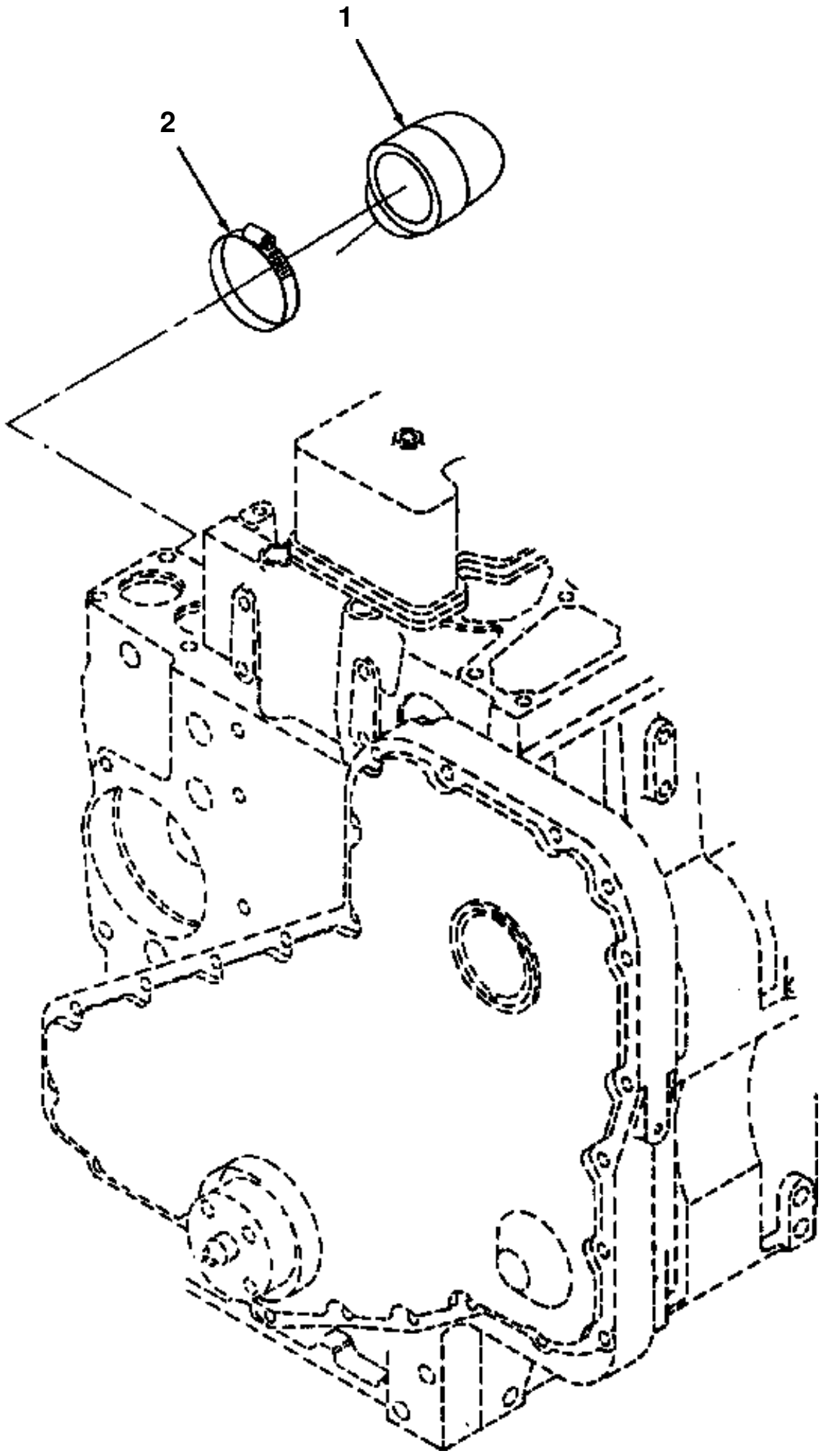

WATER INLET CONNECTION

ITEM NO.	PART NO.	DESCRIPTION	Q'TY
1	1241 224 H2	HOSE, ELBOW	1
2	1294 862 H1	CLAMP, HOSE	1

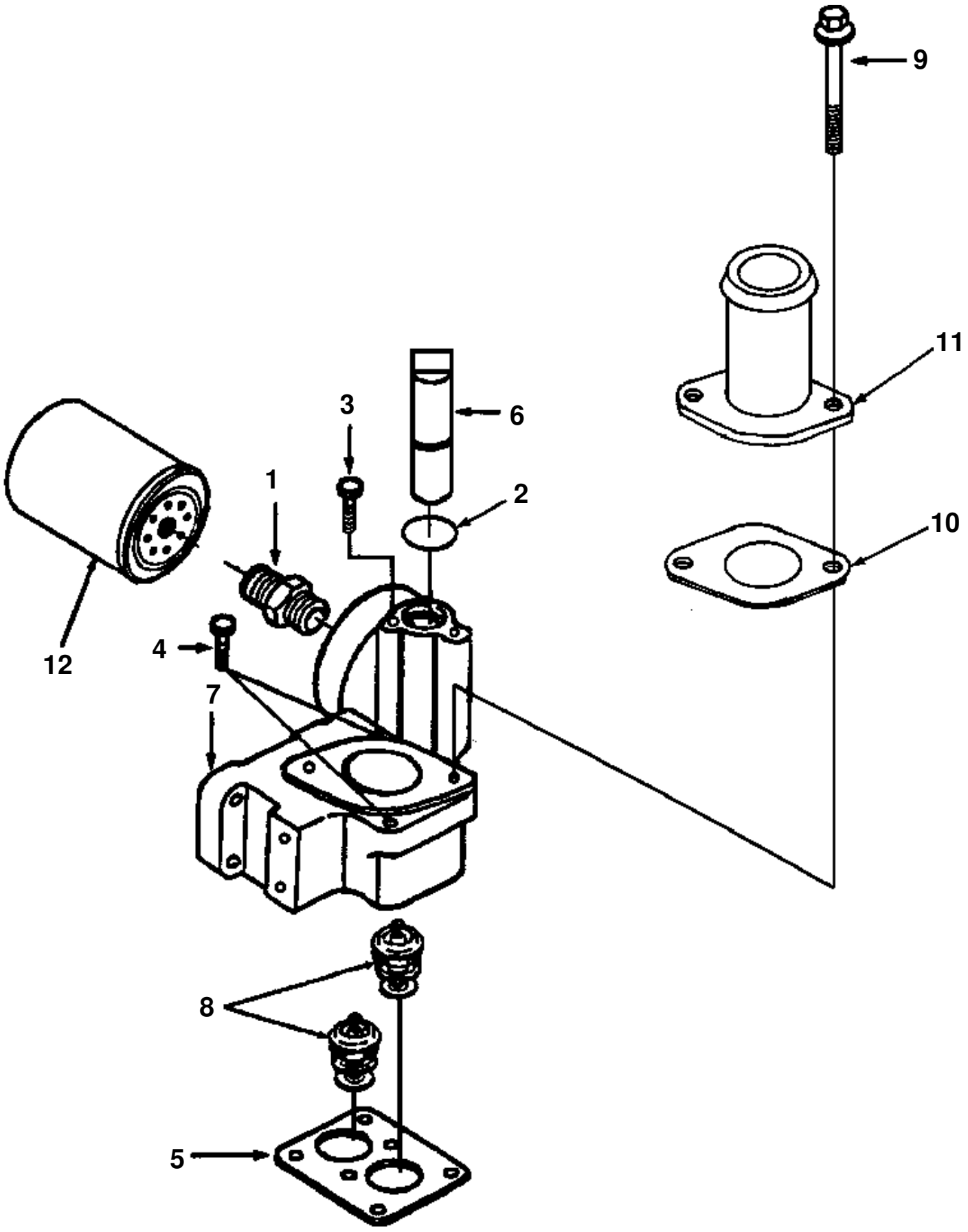
9
11
3
6
1
2
10
12
4
7
8
5

THERMOSTAT HOUSING

ITEM NO.	PART NO.	DESCRIPTION	Q'TY
1	1238 773 H1	INSERT, FILTER HEAD	1
2	1240 894 H1	O-RING	1
3	1240 896 H1	BOLT	1
4	1240 950 H1	BOLT	2
5	1261 093 H1	GASKET, THERMOSTAT HOUSING	1
6	1258 650 H1	SHAFT, SHUTOFF VALVE	1
7	1241 152 H1	HOUSING, THERMOSTAT	1
8	1241 057 H1	THERMOSTAT	2
9	1241 026 H1	BOLT	2
10	1241 360 H1	GASKET, CONNECTION	1
11	1241 257 H1	CONNECTION, WATER OUTLET	1
12	1261 387 H1	ELEMENT, CORROSION RESISTOR	1

FIG E5AL614T.001 **FAN DRIVE**

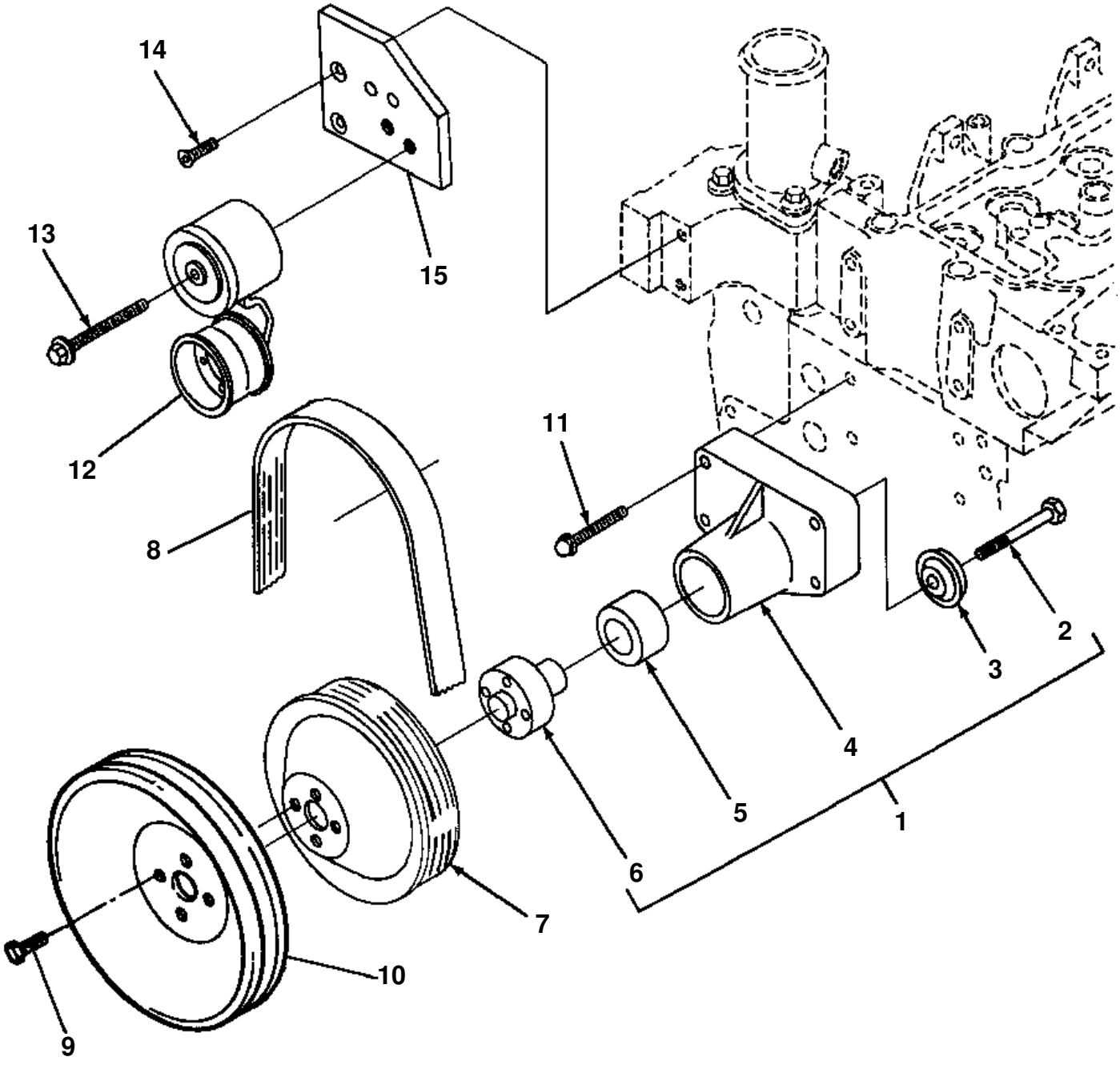

FAN DRIVE

ITEM NO.	PART NO.	DESCRIPTION	Q'TY
1	1241 236 H91	SUPPORT ASSEMBLY, FAN	1
2	1240 817 H1	· BOLT	1
3	1240 854 H1	· RETAINER, FAN HUB	1
4	(NSS)	· SUPPORT, FAN	1
5	1240 859 H1	· BEARING, ROLLER	1
6	1258 959 H1	· HUB, FAN	1
7	1241 090 H2	PULLEY, FAN	1
8	1257 787 H2	BELT, DRIVE	1
9	1240 966 H1	BOLT	4
10	1250 045 H2	PULLEY, ACCESSORY DRIVE	1
11	1240 144 H1	BOLT	4
12	1295 443 H1	TENSIONER, BELT	1
13	1240 258 H1	BOLT	1
14	1240 204 H2	BOLT	2
15	1295 138 H1	BRACKET, BELT TENSIONER	1

FIG E5AR614T.001 ENGINE VENT CONNECTION

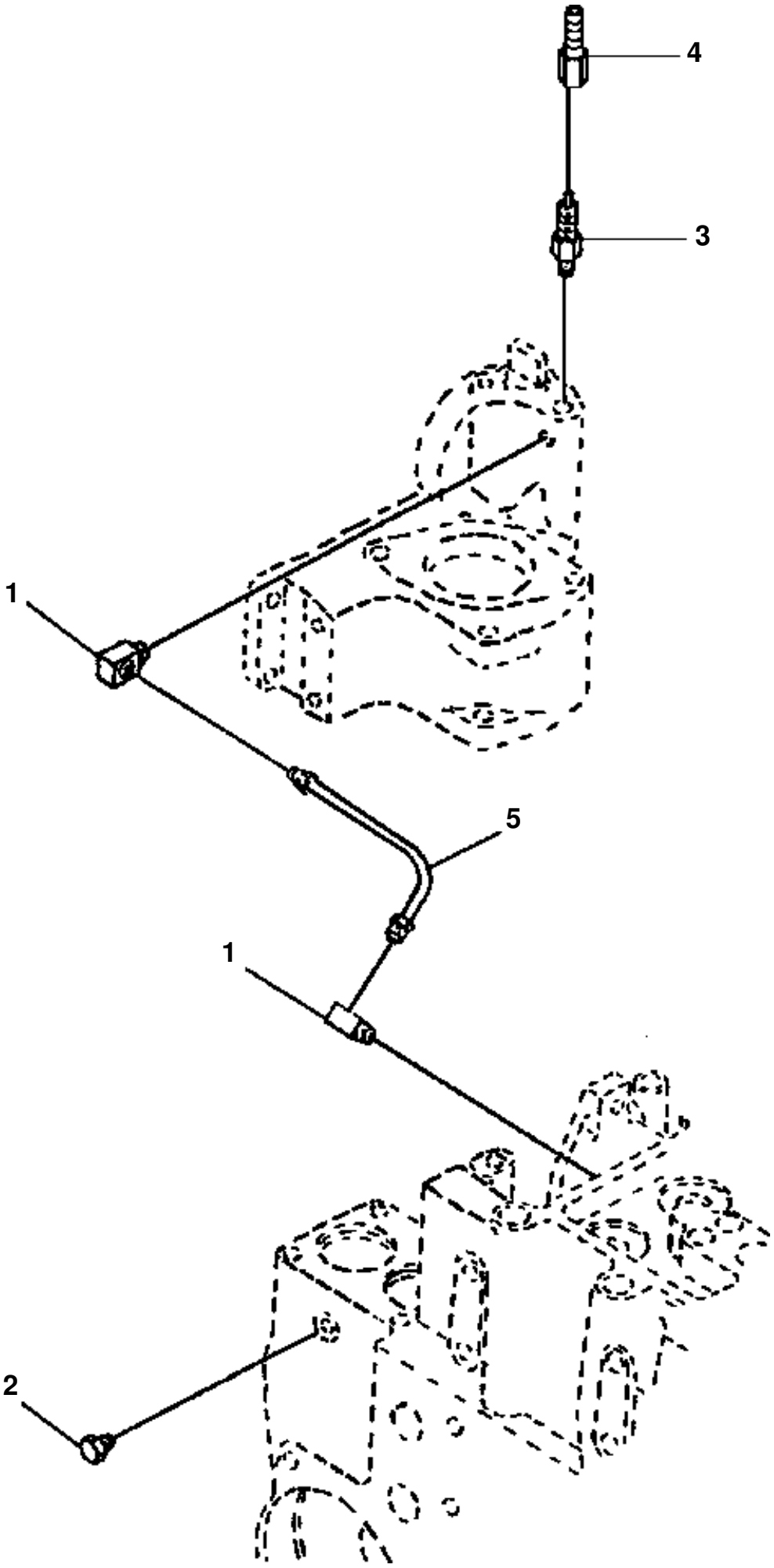

ENGINE VENT CONNECTION

ITEM NO.	PART NO.	DESCRIPTION	Q'TY
1	1240 885 H1	ELBOW, MALE ADAPTER	2
2	1240 370 H1	PLUG, PIPE	1
3	1241 095 H1	VALVE, CHECK	1
4	1240 877 H1	COUPLING, PLAIN HOSE	1
5	1241 097 H92	TUBE, VENT	1

DESCRIPTION

ALTERNATOR LOCATION

FIG E6AC614T.001 **ALTERNATOR LOCATION**

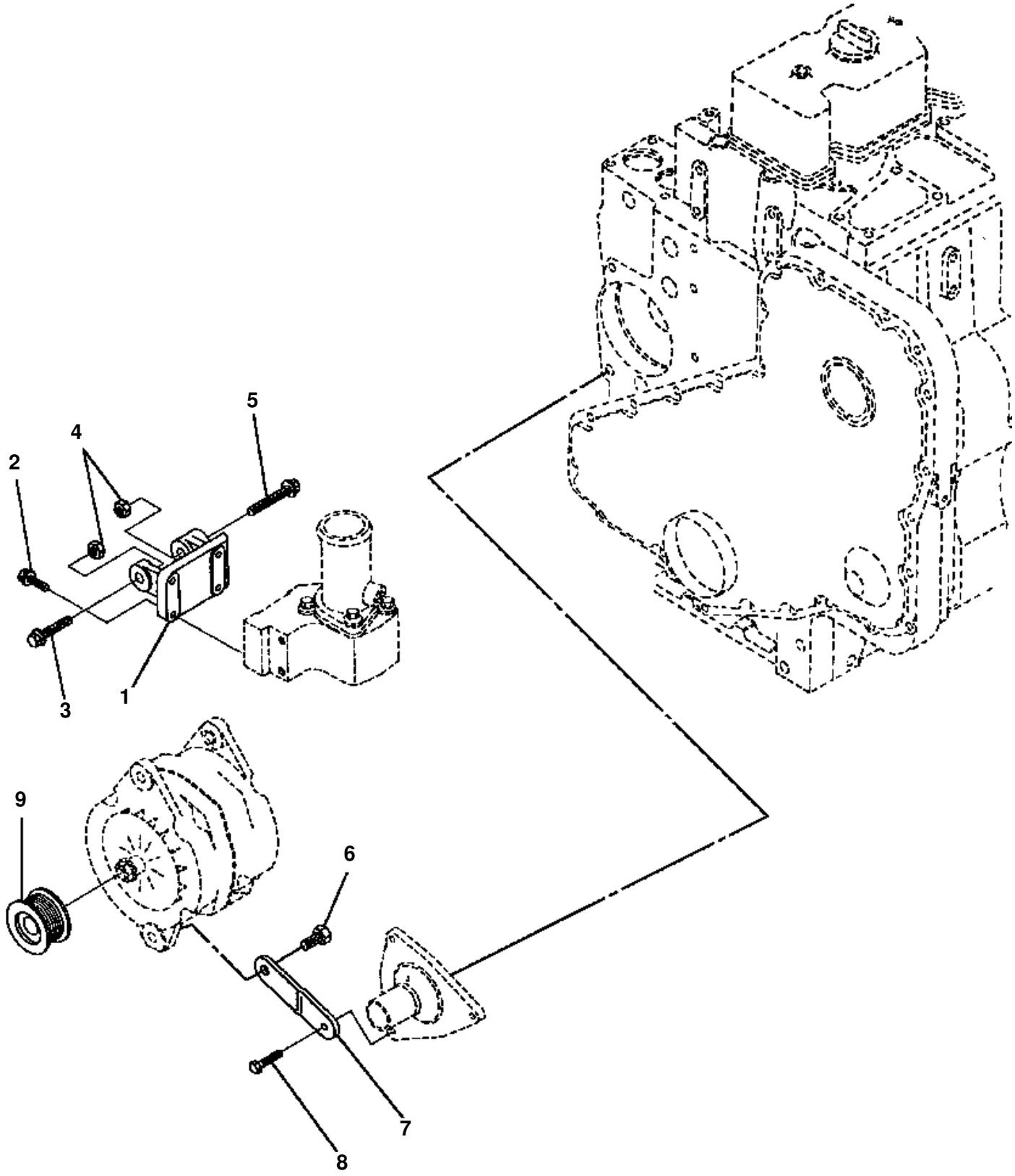

ALTERNATOR LOCATION

ITEM NO.	PART NO.	DESCRIPTION	Q'TY
1	1241 147 H1	SUPPORT, ALTERNATOR	1
2	1240 142 H1	BOLT	4
3	1241 110 H1	BOLT	1
4	1240 620 H1	NUT, HEX	2
5	1241 108 H1	BOLT	1
6	1240 087 H1	BOLT	1
7	1241 148 H1	BRACE, ALTERNATOR	1
8	1240 590 H1	BOLT	1
9	1295 024 H2	PULLEY, ALTERNATOR	1

ENGINE MOUNTING

DESCRIPTION
FLYWHEEL HOUSING LIFTING BRACKETS

FIG E8AF614T.001 **FLYWHEEL HOUSING**

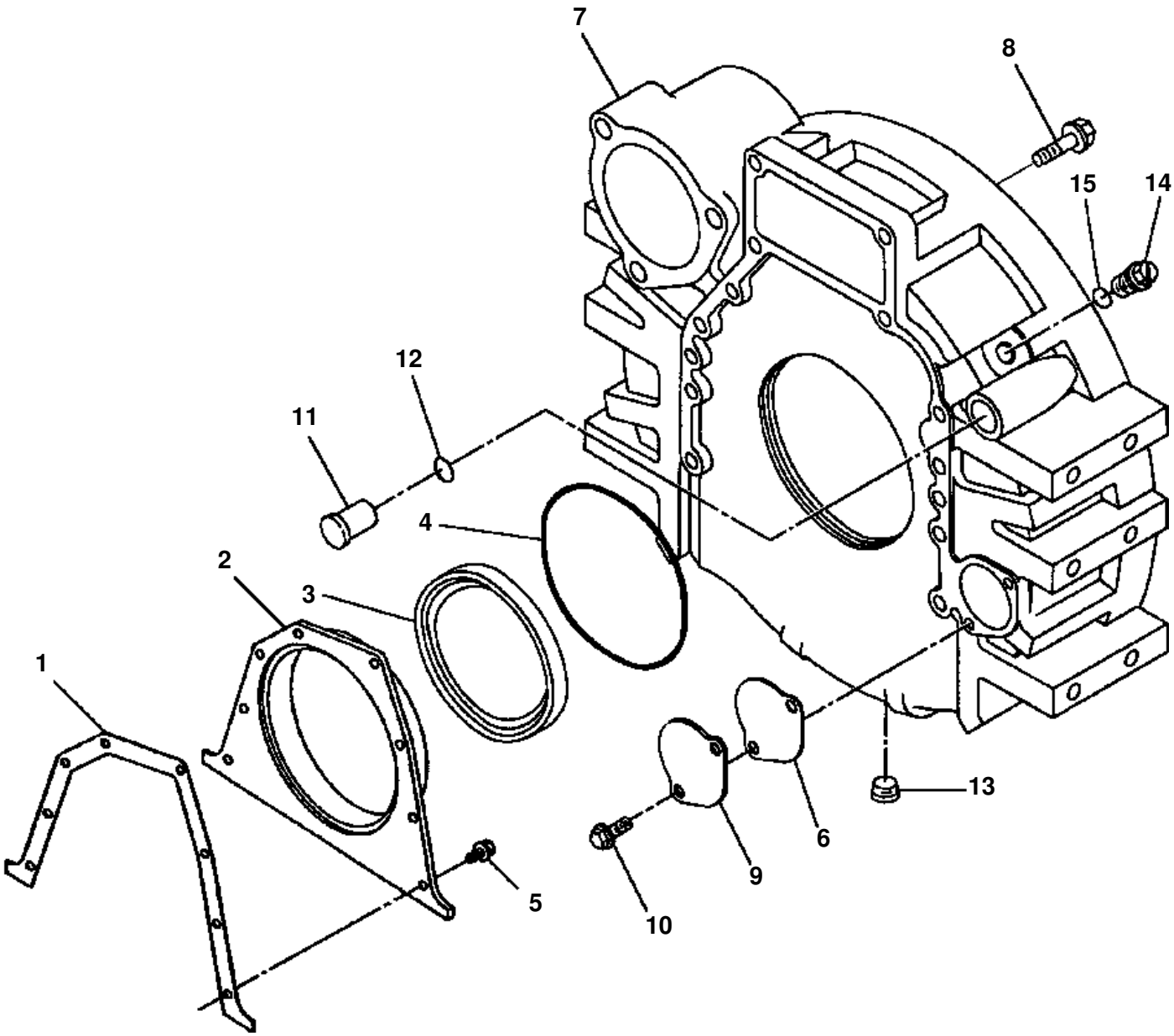

FLYWHEEL HOUSING

ITEM NO.	PART NO.	DESCRIPTION	Q'TY	REF
1	1267 008 H1	GASKET, REAR COVER	1	
2	1295 294 H1	COVER, REAR	1	
3	1252 460 H2	KIT, OIL SEAL - REAR CRANK	1	F1
4	1240 375 H1	O-RING	1	
5	1241 151 H1	BOLT	8	
6	1240 823 H1	GASKET, COVER PLATE	1	
7	1253 417 H1	HOUSING, FLYWHEEL	1	
8	1295 293 H1	BOLT	12	
9	1240 386 H2	PLATE, COVER	1	
10	1240 610 H1	BOLT	2	
11	1240 393 H1	PLUG	1	
12	1240 394 H1	O-RING	1	
13	1239 160 H1	PLUG, PIPE	1	
	1240 472 H91	PLUG, ASSEMBLY	1	
14	(NSS)	· PLUG	1	
15	1240 473 H1	· O-RING	1	
		F1 - INCLUDES INSTALLATION TOOLS		

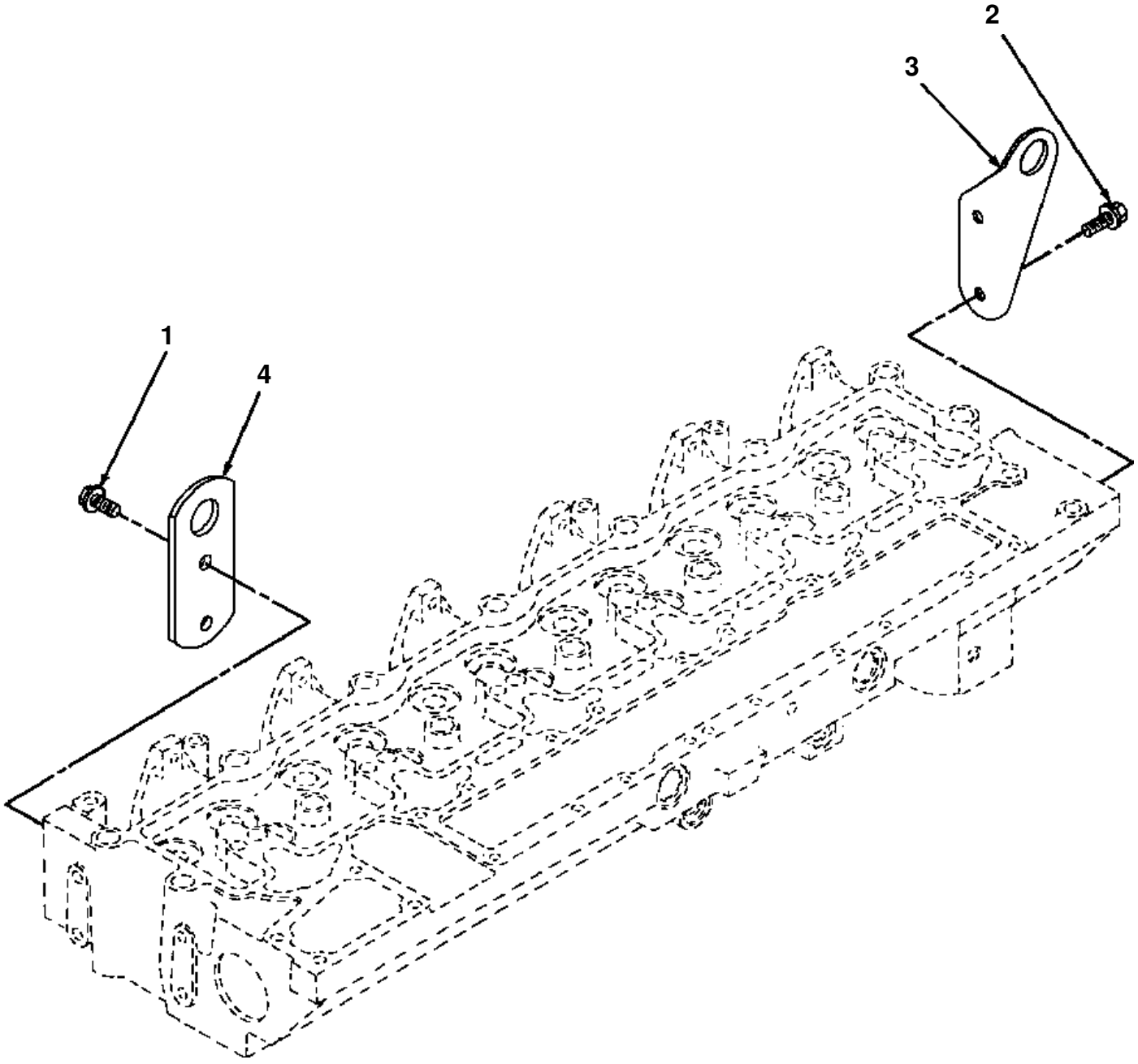
1
2
3
4

LIFTING BRACKETS

ITEM NO.	PART NO.	DESCRIPTION	Q'TY
1	1240 173 H1	BOLT, FLANGE	2
2	1240 210 H1	BOLT	2
3	1241 012 H1	BRACKET, LIFTING - REAR ENGINE	1
4	1241 078 H1	BRACKET, LIFTING - FRONT ENGINE	1

GASKET SETS AND REPAIR KITS

DESCRIPTION
GASKET SETS

GASKET SETS

PART NO.	DESCRIPTION	Q'TY
1241 174 H93	SET, LOWER ENGINE GASKET	1
1278 593 H3	· GASKET, GEAR HOUSING	1
1240 942 H1	· WASHER, SEALING	1
1240 948 H1	· SEAL, O RING	1
1240 197 H1	· WASHER, SEALING	1
1241 194 H1	· NOZZLE, PISTON COOLING	6
1241 214 H92	· FRONT SEAL SERVICE KIT	1
1240 847 H91	· REAR CRANK SEAL SERV. KIT	1
1241 233 H1	· SEAL, O RING	1
1240 375 H1	· SEAL, RECTANGULAR RING	1
1241 283 H1	· SEAL, O RING	1
1277 894 H1	· GASKET, OIL PAN	1
1241 285 H1	· SEAL, RECTANGULAR RING	1
1267 008 H1	· GASKET, REAR COVER	1
1277 893 H1	· GASKET, OIL SUCTION CONNECTION	1
1241 286 H2	· GASKET, COVER PLATE	1
1241 217 H2	· GASKET, LUBE OIL COOLER COVER	1
1241 284 H2	· SEAL, RECTANGULAR RING	1
1252 714 H2	· GASKET, HYDRAULIC PUMP	1
1241 232 H2	· SEAL, O RING	1
1241 654 H1	· GASKET, GEAR COVER	1
1241 282 H2	· GASKET, GEAR COVER	1
1241 216 H2	· GASKET, OIL COOLER CORE	1
1295 147 H1	· GASKET, LUBE OIL COOLER COVER	1
1295 798 H1	· GASKET, HYDRAULIC PUMP	1
1294 792 H1	· NOZZLE, PISTON COOLING	12
1240 123 H2	· WASHER, SEALING	1
1305 044 H91	· KIT, DRY SEAL/SLEEVE	1
1242 029 H92	SET, UPPER ENGINE GASKET - STD HEAD GSKT	1
1241 155 H1	· SEAL, O RING	2
1240 186 H3	· SEAL, O RING	6
1240 197 H1	· WASHER, SEALING	2
1240 956 H1	· SEAL, RECTANGULAR RING	1
1240 215 H1	· SEAL, BANJO CONNECTOR	7
1240 223 H1	· SEAL, O RING	1
1240 984 H1	· SEAL, ROCKER LEVER COVER	1
1241 019 H1	· SEAL, INJECTOR	6
1240 774 H1	· SEAL, RECTANGULAR RING	1
1241 135 H1	· SEAL, O RING	1
1241 249 H1	· GASKET, TURBOCHARGER	1
1261 093 H1	· GASKET, THERMOSTAT HOUSING	1
1266 456 H1	· GASKET, INT MANIFOLD COVER	1
1241 287 H1	· GASKET, OIL DRAIN	1
1266 991 H1	· LOCKPLATE	12
1241 663 H1	· SEAL, VALVE STEM	6
1242 030 H1	· GASKET, CONNECTION	1
1294 334 H1	· WASHER, SEALING	4
1294 807 H1	· WASHER, SEALING	2
1295 718 H1	· GASKET, CONNECTION	1
1242 032 H1	· SEAL, VALVE STEM	6
1296 593 H1	· GASKET, INT MANIFOLD COVER	1
1295 717 H1	· GASKET, EXHAUST MANIFOLD	6
1295 449 H2	· GASKET, CYLINDER HEAD - STD	1
1241 178 H93	SET, UPPER ENGINE GASKET - 0.25 MM O/S HEAD GSKT	1
1241 155 H1	· SEAL, O RING	2
1240 186 H3	· SEAL, O RING	6
1240 197 H1	· WASHER, SEALING	2
1240 956 H1	· SEAL, RECTANGULAR RING	1
1240 215 H1	· SEAL, BANJO CONNECTOR	7
1240 223 H1	· SEAL, O RING	1
1240 984 H1	· SEAL, ROCKER LEVER COVER	1
1241 019 H1	· SEAL, INJECTOR	6
1240 774 H1	· SEAL, RECTANGULAR RING	1
1241 135 H1	· SEAL, O RING	1
1241 249 H1	· GASKET, TURBOCHARGER	1
1261 093 H1	· GASKET, THERMOSTAT HOUSING	1
1266 456 H1	· GASKET, INT MANIFOLD COVER	1
1241 287 H1	· GASKET, OIL DRAIN	1
1266 991 H1	· LOCKPLATE	12
1241 663 H1	· SEAL, VALVE STEM	6
1242 030 H1	· GASKET, CONNECTION	1

GASKET SETS

PART NO.	DESCRIPTION	Q'TY
1294 334 H1	· WASHER, SEALING	4
1294 807 H1	· WASHER, SEALING	2
1295 718 H1	· GASKET, CONNECTION	1
1242 032 H1	· SEAL, VALVE STEM	6
1296 593 H1	· GASKET, INT MANIFOLD COVER	1
1295 717 H1	· GASKET, EXHAUST MANIFOLD	6
1295 449 H2	· GASKET, CYLINDER HEAD - 0.25 MM O/S	1
1241 179 H93	SETS, UPPER ENGINE GASKET - 0.50 MM O/S HEAD GSKT	1
1241 155 H1	· SEAL, O RING	2
1240 197 H1	· WASHER, SEALING	2
1240 956 H1	· SEAL, RECTANGULAR RING	1
1240 215 H1	· SEAL, BANJO CONNECTOR	7
1240 223 H1	· SEAL, O RING	1
1240 984 H1	· SEAL, ROCKER LEVER COVER	1
1241 019 H1	· SEAL, INJECTOR	6
1240 774 H1	· SEAL, RECTANGULAR RING	1
1241 135 H1	· SEAL, O RING	1
1240 186 H3	· SEAL, O RING	6
1241 249 H1	· GASKET, TURBOCHARGER	1
1261 093 H1	· GASKET, THERMOSTAT HOUSING	1
1266 456 H1	· GASKET, INT MANIFOLD COVER	1
1241 287 H1	· GASKET, OIL DRAIN	1
1266 991 H1	· LOCKPLATE	12
1241 663 H1	· SEAL, VALVE STEM	6
1242 030 H1	· GASKET, CONNECTION	1
1294 334 H1	· WASHER, SEALING	4
1294 807 H1	· WASHER, SEALING	2
1295 718 H1	· GASKET, CONNECTION	1
1242 032 H1	· SEAL, VALVE STEM	6
1295 717 H1	· GASKET, EXHAUST MANIFOLD	6
1295 454 H1	· GASKET, CYLINDER HEAD - 0.50 MM O/S	1
1296 593 H1	· GASKET, INTAKE MANIFOLD	1