RUTHZIL TRATOR COMERCIAL DE PEÇAS LTDA 11 97083-6812 ROLANDO CITRANGULO

KEPB001408

FEVEREIRO 2013

PARTS BOOK

KOMATSU

WA320-5
Serial No. B10001 and up

SAA6D102E-2
Serial No. 30380718 and up

RUTHZIL TRATOR COMERCIAL DE PEÇAS LTDA 11 97083-6812 ROLANDO CITRANGULO

FOREWORD

When ordering a spare part, specify the part number, part name, and quantity required, and also specify your machine model code, machine serial number, engine serial number and the service meter reading.

This Parts Book describes not only standard items but also optional equipment and attachments. To order a part, please contact your nearest Komatsu distributor.

This Parts Book contains the information and special symbols as follows:

Figure and list

When you open this Parts Book, you will find an illustration on the left page (even-numbered page) for the spare parts group. Each individual part in the group is given an index number.
On the right page, the component parts of the group are listed in the order of the index numbers shown on the illustration page. The part number, part name, and applicable machine serial number are given for each part.

FIG. No.

The FIG. No. is the number of the illustration shown on the page. It is not the spare part number. The numbers are not always continuous.

INDEX

This is the same as the index number in the illustration. The parts are listed in index number order.

PART No.

The number given in the PART No. column is the part number for the part shown. It is the code used when ordering that part. It is important that there be no mistake in this code number when ordering.

DESCRIPTION

This gives the name of part that has the part number listed. The mark "." is put in front of the part name of an assembly part and the item is entered following the assembly. If a part marked with "." is a sub assembly, its components are marked with "..".

Example:
```
ELEMENT ASSEMBLY, AIR CLEANER
.ELEMENT ASSEMBLY, OUTER
..ELEMENT, OUTER
..NUT, WING
..WASHER
```

Q'TY (Quantity)

This specifies the number of pieces used for one machine. However, if a part is included in the assembly and/or component, the quantity per such assembly and/or component is specified.

SERIAL No.

Applicable engine serial number is indicated for the engine volume. In the chassis volume, this indicates the machine serial number in which the part is used.

Symbols and codes

Symbols and codes are used in the PART No. and DESCRIPTION columns, and represent the following:

□	The part specified in the line above can be used instead of this part.

Symbols and codes (Cont'd)

⊡	This part can be used instead of the part specified in the line immediately above.
◆	This part and the part specified in the line immediately above are interchangeable.
■	The part specified in the DESCRIPTION column can be used instead of this part if it is used as a set.
☒	This shows discontinued part. The part specified in the above line is supplied instead.
▼	This shows a discontinued part. The part specified in the DESCRIPTION column is supplied instead as a set.
☆	This part cannot be supplied as an individual part. It is supplied as an assembly.
★	This part cannot be supplied as an individual part. It is supplied as an assembly. However, it is supplied as an individual part by authorized distributors only.
⊙	This indicates a part group. The part marked with this symbol is not considered a supply part.
====	The parts surrounded by this line are components of the part group specified in the above line.
G-1,G-2	These indicate categories of part groups.
KIT	This indicates kit parts. For kit parts, refer to the service kit tables provided in this Parts Book.
△	This indicates a part supplied as semi-finished. It requires additional work before installation.
PAINT(1)	This indicates parts shipped painted with undercoat.
PAINT(2)	This indicates parts supplied with different colors from the original color of your machine.
(A)	This code indicates special parts for cold weather "A" specification (-30°C) machines.
(B)	This indicates special parts for cold weather "B" specification (-50°C) machines.

AVANT-PROPOS

Lorsque vous passez une commande d'une ou plusieurs pièces détachées, vous êtes prié de spécifier, outre le ou les numéro(s), désignation(s) et quantité(s) des pièces commandée(s), le numéro de carrosserie, le numéro de série du moteur et la lecture du compteur de service du véhicule.
Sur le présent catalogue des pièces figurent non seulement les équipements standard, mais également les équipements et accessoires en option. Si vous désirez un équipement ou une pièce quelconque, vous êtes prié de prendre contact avec le concessionnaire Komatsu le plus proche.

Ce catalogue des pièces se présente de la manière suivante:

Figures et listes	Lorsque vous ouvrez le présent catalogue, vous trouvez: sur la page de gauche (numéro de page pair), les illustrations de toutes les pièces composant l'équipement en question avec les numéros de référence pour chacune des pièces, sur la page de droite (numéro de page impair), la liste des pièces dans l'ordre des numéro de référence des pièces avec indication du numéro des pièces, de la désignation des pièces, de la quantité utilisée et des numéros de série.
FIG. No. (Figure et liste)	Le numéro de figure (FIG. XX) correspond au numéro de la figure représentée sur cette page, mais ne correspond pas au numéro de la pièce détachée. Veuillez noter que les numéros de figure ne se suivent pas systématiquement.
INDEX (Numéros de référence)	Les numéros de référence correspondent aux numéros de référence notés sur la figure et sont énumérés dans l'ordre des numéros de référence.
PART No. (Numéros de pièce)	Les numéros indiqués dans cette colonne correspondent aux numéros des pièces représentées et constituent les codes à spécifier pour toute commande de pièce. Il est important de ne pas faire d'erreur avec ce code au moment de la commande.
DESCRIP-TION (Descript-ion)	Dans cette colonne est indiquée la désignation des différentes pièces. Dans le cas d'un ensemble constitué de pièces, la désignation de chacune de ces pièces est précédée d'un point "." et dans le cas d'un ensemble constitué de sous-ensembles eux-mêmes constitués de pièces, la désignation de chacune de ces pièces est précédée de deux points "..". Exemple: ELEMENT ASSEMBLY, AIR CLEANER .ELEMENT ASSEMBLY, OUTER ..ELEMENT, OUTER ..NUT, WING ..WASHER
Q'TY (Quantité)	Dans cette colonne est indiqué le nombre de pièces nécessaires pour l'équipement en question. S'il s'agit de pièces comprises dans un ensemble et/ou composant, et la quantité indiquée est le nombre de pièces nécessaires pour l'ensemble et/ou le composant en question.
SERIAL No. (Numéros de série)	S'il s'agit d'un élément du moteur, ces numéros sont les numéros de série des moteurs sur lesquels cette pièce est utilisée. S'il s'agit d'un élément de la carrosserie, ces numéros sont les numéros des carrosseries sur lesquelles la pièce en question est utilisée.

Codification	Les codes indiqués dans les colonnes "N° de pièce" et "Description" ont les significations suivantes:
□	Au lieu de la pièce affectée de ce code, il est possible d'utiliser la pièce qui figure juste au-dessus.
⊡	La pièce affectée de ce code peut être utilisée à la place de la pièce figurant juste au-dessus.
◆	La pièce affectée de ce code et la pièce figurant dans la ligne justeau-dessus sont interchangeables
☒	Au lieu de la pièce affectée de ce code, il est possible d'utiliser la combinaison des pièces indiquées dans la colonne "Description".
■	Les pièces affectées de ce code ne sont plus fournies. Au lieu de cette pièce, c'est la pièce figurant dans la ligne justeau-dessus qui sera fournie.
▼	Les pièces affectées de ce code ne sont plus fournies. Au lieu de cette pièce, c'est la combinaison de pièces figurant dans la colonne "Description" qui sera fournie.
☆	Les pièces affectées de ce code ne seront pas fournies à l'unité mais par jeu de pièces.
★	Les pièces affectées de ce code ne seront pas fournies à l'unité mais par jeu de pièces, sauf dans le cas de certains concessionnaires Komatsu.
⊙	Ce code indique qu'il s'agit d'un groupe de pièces. Les pièces affectées de ce code ne sont pas fournies en tant que pièces détachées.
= = = =	Les pièces ainsi encadrées sont les pièces composantes du groupe de pièces indiqué dans la ligne d'au-dessus.
G-1, G-2	Indique le numéro du groupe de pièces
KIT	Indique qu'il s'agit d'un kit de pièces. Pour les pièces composantes des kits, veuillez vous reporter à la liste des kits de service.
△	Indique qu'il s'agit de pièces fournies à l'état semi-fini. Ces pièces devront être usinées avant l'installation.
PAINT(1)	Indique que sur les pièces fournies est appliquée uniquement une couche primaire.
PAINT(2)	Indique que la couleur de la peinture est différente de celle d'origine.
(A)	Indique qu'il s'agit de pièces pour spécifications artiques A (–30°C)
(B)	Indique qu'il s'agit de pièces pour spécifications artiques B (–50°C)

VORWORT

Bei der Bestellung von Teilen bitte die Teilenummer, die Teilebezeichnung und die Menge des jeweiligen Teils sowie die Modellnummer, die Seriennummer der Maschine, die Seriennummer des Motors und den Stand des Betriebsstundenzählers angeben.

In dieser Ersatzteilliste ist nicht nur das Standardzubehör aufgeführt, sondern auch als Sonderausstattung erhältliche Teile und Einrichtungen.

Bestellungen nimmt Ihr zuständiger Komatsu-Händler entgegen.

Die folgenden Angaben sind in der Ersatzteilliste aufgeführt.

Bild und Liste	Beim Aufschlagen des Ersatzteilkatalogs ist auf der linken Seite (d.h. der Seite mit der geraden Zahl) eine Darstellung der Bauteile der betreffenden Baugruppe zu finden. Jedes Einzelteil der Baugruppe ist mit einer Kennzahl versehen. Auf der rechten Seite (d.h. der Seite mit der ungeraden Zahl) sind die Bauteile der Baugruppe, geordnet nach den auf der linken Seite angegebenen Kennzahlen, aufgeführt. Jedes Einzelteil wird mit Teilenummer, Teilebezeichnung und entsprechender Seriennummer angegeben.
FIG. No. (Bildnummer)	Die Bildnummer entspricht der Nummer des auf der betreffenden Seite stehenden Bilds. Es handelt sich dabei nicht um die Nummer des Lieferteils. Es sei ferner erwähnt, daß die Bilder nicht fortlaufend numeriert sind.
INDEX (Kennzahl)	Dabei handelt es sich um die gleiche Zahl wie die Kennzahl im Bild. Die Teile sind geordnet nach der Kennzahl aufgeführt.
PART No. (Teilenummer)	Die in der Spalte "Teilenummer" aufgeführte Nummer entspricht der Teilenummer für das betreffende Teil. Diese Nummer dient zur Bestellung des Teils. Deshalb bei der Bestellung stets auf die genaue Angabe der Teilenummer achten.
DESCRIPTION (Beschreibung)	Hierunter wird die Bezeichnung des Teils mit der aufgeführten Teilenummer angegeben. Jedes Baugruppen-Bauteil ist mit dem vorangestellten Symbol "." gekennzeichnet und wird hinter der entsprechenden Baugruppe aufgeführt. Handelt es sich bei dem mit "." gekennzeichneten Bauteil um eine Baugruppe, sind die Bauteile dieser Baugruppe mit ".." gekennzeichnet. Beispiel: Element assembly, air cleaner . Element assembly, outer .. Element, outer .. Nut, wing .. Washer
QTY (Menge)	Hierunter wird die Anzahl der Bauteile für eine Maschine angegeben. Im Falle einer Baugruppe oder eines Aggregats wird allerdings die Anzahl der Teile pro Baugruppe angegeben.
SERIAL No. (Seriennummer)	Im Ersatzteilkatalog für den Motor versteht man hierunter die Seriennummer des Motors, in den das betreffende Teil eingebaut ist. Im Ersatzteilkatalog für die Maschine versteht man hierunter die Seriennummer der Maschine, in die das entsprechende Teil eingebaut ist.
Kodes	Die in den Spalten "Teile-Nr." und "Beschreibung" verwendeten Kodes haben folgende Bedeutung: □ Anstelle dieses Teils kann das in der vorangegangenen Zeile aufgeführte Teil verwendet werden.

⊡	Dieses Teil kann anstelle des in der vorangegangenen Zeile aufgeführten Teils verwendet werden.
◆	Dieses Teil ist mit dem in der vorangegangenen Zeile aufgeführten Teil austauschbar.
■	Anstelle dieses Teils kann das in der Spalte "Beschreibung" aufgeführte Teil verwendet werden, wenn das Teil zusammen mit anderen Teilen als ein Bauteilsatz verwendet wird.
⊠	Dieses Teil kann nicht mehr geliefert werden. Statt dessen wird das in der vorangegangenen Zeile aufgeführte Teil geliefert.
▼	Dieses Teil kann nicht mehr geliefert werden. Statt dessen wird das in der Spalte "Beschreibung" aufgeführte Teil als ein Bauteilsatz geliefert.
☆	Dieses Teil kann nicht als Einzelteil, sondern nur als Baugruppe geliefert werden.
★	Dieses Teil kann nicht als Einzelteil, sondern nur als Baugruppe geliefert werden. Nur bei bestimmten Händlern kann es als Einzelteil bezogen werden.
⊙	Hierdurch wird ein Aggregat gekennzeichnet. Es wird nicht zu den Lieferteilen gerechnet.
= = = =	Die Teile innerhalb dieser Markierung gehören zu dem oben aufgeführten Aggregat.
G-1, G-2	Hiermit wird die Kategorie eines Aggregats angegeben.
KIT	Hiermit werden Teile gekennzeichnet, die nur als Satz erhältlich sind. Siehe dazu die Tabelle der als Satz gelieferten Ersatzteile.
△	Hiermit werden Teile gekennzeichnet, die in vorbearbeitetem Zustand geliefert werden und für den Einbau nachbearbeitet werden müssen.
PAINT(1)	Hiermit werden Teile gekennzeichnet, die mit Grundierung geliefert werden.
PAINT(2)	Hiermit werden Teile gekennzeichnet, die in unterschiedlichen Farben geliefert werden.
(A)	Hiermit werden Teile gekennzeichnet, die speziell für kalte Witterung (A) (-30°C) ausgelegt sind.
(B)	Hiermit werden Teile gekennzeichnet, die speziell für kalte Witterung (B) (-50°C) ausgelegt sind.

PROLOGO

Cuando tenga que efectuar un pedido de repuestos, se ruega especificar el número, el nombre y la cantidad de piezas requeridas, indicando asimismo el número de modelo, el número de serie del motor y la lectura del contador de servicio.

Esta lista de piezas especifica no solamente accesorios estándar sino también piezas y accesorios opcionales. Para realizar un pedido, sírvase ponerse en contacto con su distribuidor Komatsu más cercano.

La lista de repuestos se compone de los elementos siguientes.

Figura y lista
Al abrir esta lista de repuestos, encontrará en la página izquierda (página de número impar) una ilustración de los componentes del conjunto. La figura de cada componente individual va provista de un número de índice.
En la página derecha (página de número par), los componentes del conjunto están listados siguiendo el orden de los números de índice de la página izquierda.

FIG. NO. (Número de figura)
El número de figura es el número indicado en cada una de las respectivas figuras, y no es el número de la pieza. Los números de figura no son siempre continuos.

INDEX (Número de índice)
Coincide con el número de índice de cada figura, y aparecen en la lista en orden numérico.

PART NO. (Número de pieza)
El número indicado en la columna de "Número de piezas" es el número de pieza que aparece en la figura. Es sumamente importante debido a que se utiliza como código al efectuar el pedido de piezas.

DESCRIPTION (Nombre de las piezas)
Indica la descripción correspondiente a cada número de pieza.
Los componentes de un conjunto llevan la marca "." antes del nombre. Por otra parte, cuando se tratan de piezas armadas, llevan la marca ".." antes del nombre
Ejemplo:
ELEMENT ASSEMBLY, AIR CLEANER
.ELEMENT ASSEMBLY, OUTER
..ELEMENT, OUTER
..NUT, WING
..WASHER

Q'ty (Cantidad)
Especifica el número de piezas utilizadas en cada máquina. Sin embargo, para un conjunto o componentes de un grupo de piezas, se especifica el número de piezas por conjunto.

SERIAL NO. (Número de serie)
En el manual de piezas del motor, indica el número de serie del motor en que se utiliza la pieza.
En el manual de piezas de la máquina, indica el número de serie del vehículo en que se utiliza esa pieza.

Códigos
Los códigos y números de piezas especificados en las columnas "N°. de pieza" y "Nombre de la pieza" representan lo siguiente:

□	En lugar de esta pieza es posible utilizar la pieza indicada en el renglón de arriba.
⊡	Es posible utilizar esta pieza en lugar de la indicada en el renglón inmediatamente anterior.
◆	Esta pieza y la indicada en el renglón inmediatamente anterior son intercambiables.
■	Es posible utilizar la pieza especificada en la columna "Nombre de las piezas" si se utiliza como un conjunto.
☒	Esta pieza se ha dejado de suministrar. En su lugar, se suministra la pieza indicada en el renglón anterior.
▼	Esta pieza se ha dejado de suministrar. En su lugar, se suministra la pieza especificada en la columna "Nombre de las piezas" como un conjunto.
☆	Esta pieza no se suministra como pieza individual. Se suministra como un conjunto.
★	Esta pieza no se suministra como pieza individual. Se suministra como un conjunto. Sin embargo, es suministrada como pieza individual por ciertos distribuidores.
⊙	Indica grupo de piezas. Las piezas que llevan este código no son suministrables.
====	Las piezas rodeadas por esta línea son componentes del grupo de piezas especificado arriba.
G-1, G-2	Indica la clasificación del grupo de piezas.
KIT	Indica componentes de un juego. Para los componentes de un juego, refiérase a la tabla de los juegos de servicio.
Δ	Indica pieza suministrada como semiterminada. Debe ser reelaborada antes del uso.
PAINT(1)	Indica piezas despachadas con una primera mano de pintura.
PAINT(2)	Indica piezas despachadas con colores diferentes.
(A)	Indica piezas especiales (A) especificadas para climas fríos (-30°C).
(B)	Indica piezas especiales (B) especificadas para climas fríos (-50°C)

INTRODUÇÃO

Ao solicitar uma peça, informe o número, nome e quantidade da peça necessária, bem como o número da carroçaria, número do motor, e leitura do medidor de serviço.

Esta lista de peças não somente especifica os acessórios padrões mas também as peças opcionais e aditamentos. Para pedir uma peça, entre em contato com o revendedor Komatsu mais próximo.

Este livro de peças consiste nos seguintes itens.

Figura e lista
Ao abrir este livro de peças, você encontrará na página esquerda (a página com número par), uma ilustração das peças componentes do conjunto. Cada peça individual no conjunto tem um número de índice.
Na página direita (a página com número ímpar), as peças componentes do conjunto são relacionadas na ordem dos números de índice mostrados na página esquerda. Cada peça é designada com um número, nome, e número de série aplicável.

FIG. NO. (Número da figura)
O número da figura é o número da figura mostrada em tal página. Ele não é um número para fornecimento da peça. Do mesmo modo, os números das figuras nem sempre são contínuos.

INDEX (Número de índice)
Este número é igual ao número de índice na figura. As peças são relacionadas na ordem dos números de índice.

PART NO. (Número de peça)
O número designado na coluna "Número da peça" é o número para a peça mostrada. Ele é o código usado para o pedido da peça. É importante que não haja equívoco com respeito a este número ao pedir uma peça.

DESCRIPTION (Descrição)
Este item descreve o nome da peça que tem o número de peça relacionado. É colocado um "." na frente do nome de um componente de conjunto e o item é introduzido após o conjunto. Se uma peça marcada com "." é um conjunto, seus componentes são marcados com "..".

Exemplo:
ELEMENT ASSEMBLY, AIR CLEANER
.ELEMENT ASSEMBLY, OUTER
..ELEMENT, OUTER
..NUT, WING
..WASHER

Q'ty (Quantidade)
Este item especifica o número de peças usadas para 1 máquina. No entanto, para o conjunto ou componentes de um grupo de peças, o número de peças por conjunto é especificado.

SERIAL NO. (Número de série)
No livro de peças do motor, esse número indica o número de série do motor no qual a peça é usada. No livro de peças da máquina, esse número indica o número de série da máquina na qual a peça é usada.

Códigos
Os códigos e número de peça especificados nas colunas "N.º de peça" e "Descrição" representam o seguinte:

□	A peça especificada na linha acima pode ser usada no lugar desta peça.
⊡	Esta peça pode ser usada no lugar da peça especificada na linha imediatamente acima.
◆	Esta peça e a peça especificada na linha imediatamente acima são intercambiáveis.
■	A peça especificada na coluna "Descrição" pode ser usada no lugar desta peça se ela for usada como um jogo.
⊠	Esta peça não é mais fornecida. A peça especificada na linha acima é fornecida em seu lugar.
▼	Esta peça não é mais fornecida. A peça especificada na coluna "Descrição" é fornecida em seu lugar como um jogo.
☆	Esta peça não pode ser fornecida como uma peça individual. Ela é fornecida como um conjunto.
★	Esta peça não pode ser fornecida como uma peça individual. Ela é fornecida como um conjunto. No entanto, ela é fornecida como uma peça individual somente por revendedores específicos.
⊙	Isso indica um grupo de peças. Esta peça não é considerada uma peça de fornecimento.
====	As peças envolvidas por esta linha são componentes do grupo de peças especificado acima.
G-1, G-2	Isso indica a categoria do grupo de peças.
KIT	Isso indica componentes de um kit. Para os componentes de um kit, refira-se à tabela de kits de serviço.
Δ	Isso indica uma peça fornecida como produto semi-acabado. Ela deve ser reformada antes do uso.
PAINT(1)	Isso indica peças embarcadas pintadas com uma primeira mão de fundo.
PAINT(2)	Isso indica peças embarcadas com cores diferentes.
(A)	Isso indica peças especiais para especificação (A) de tempo frio (-30°C).
(B)	Isso indica peças especiais para especificação (B) de tempo frio (-50°C).

مقدمة

عند طلب القطع، يرجى تحديد رقم القطعة واسم القطعة والكمية المطلوبة من القطعة، مع تحديد رقم الموديل والرقم التسلسلي للمحرك وقراءة عداد الخدمة.

قائمة القطع هذه لا تقتصر على الكماليات القياسية فقط بل تشمل ايضاً القطع والملحقات الاختيارية. لطلب القطع، يرجى الاتصال بأقرب موزع لمنتجات كوماتسو.

قائمة القطع تتضمن البنود التالية.

الشكل والقائمة
عندما تفتح كتاب القطع، ستجد على الصفحة اليسرى (الصفحة ذات الرقم الزوجي) شكلاً توضيحياً للقطع المكونة للمجموعة. كل قطعة في مجموعة المكونات لها رقم فهرس.
على الصفحة اليمنى (الصفحة ذات الرقم الفردي) تم إدراج قائمة بالقطع التي تتكون منها المجموعة مرتبة حسب ارقام الفهرس المبيّنة في الصفحة اليسرى. وقد اعطيت كل قطعة من القطع رقم قطعة واسم قطعة ورقم تسلسلي ينطبق عليها.

FIG. No. (رقم الشكل)
رقم الشكل هو الرقم الخاص بالشكل التوضيحي الذي يظهر في تلك الصفحة. وهو ليس رقم القطعة التي يتم توريدها. كما ان ارقام الاشكال ليست دائماً متتابعة.

INDEX (رقم الفهرس)
هذا الرقم هو نفس رقم الفهرس الوارد في الشكل التوضيحي. تدرج القطع في القائمة مرتبة تبعاً لارقام الفهرس.

PART No. (رقم القطعة)
الرقم الوارد في عمود « رقم القطعة » هو رقم القطعة الخاص بالقطعة المبيّنة. وهو الرمز المستخدم لطلب تلك القطعة. ومن الضروري عدم ارتكاب اي خطأ في تحديد هذا الرقم عند طلب القطع.

DESCRIPTION (الوصف)
يعطي اسم القطعة المدرج رقمها في القائمة.
توضع العلامة " . " امام اسماء القطع المكونة للمجموعة ويدرج البند بعد المجموعة. اذا كانت القطعة المشار اليها بالعلامة " . " هي نفسها عبارة عن مجموعة مكونات فان كلاً من مكوناتها يشار اليها بالعلامة " .. ".
مثال : ELEMENT ASSEMBLY, AIR CLEANER
.ELEMENT ASSEMBLY, OUTER
.. ELEMENT, OUTER
..NUT, WING
..WASHER

Q'ty (الكمية)
هذا هو عدد القطع المستخدمة لآلية واحدة. أما بالنسبة لمجموعات المكونات ومجموعات القطع فانه يتم تحديد عدد القطع لكل مجموعة.

SERIAL No. (الرقم التسلسلي)
في كتاب قطع المحرك، يشير هذا الرقم الى الرقم التسلسلي للمحرك الذي تستخدم فيه القطعة. في كتاب قطع الآلية، يشير هذا الرقم الى الرقم التسلسلي للآلية التي تستخدم فيها القطعة.

الرموز

الرموز وارقام القطع المذكورة في عمود « رقم القطعة » وعمود « الوصف » تمثل كما يلى:

□ القطعة المذكورة في السطر السابق يمكن استعمالها بدلاً من هذه القطعة.

⊡ هذه القطعة يمكن استعمالها بدلاً من القطعة المذكورة في السطر السابق مباشرة.

◆ هذه القطعة والقطعة المذكورة في السطر السابق مباشرة يمكن لكل منهما ان تحل محل الاخرى.

■ القطعة المذكورة في عمود « الوصف » يمكن استعمالها بدلاً من هذه القطعة اذا استخدمت كطقم.

⊠ هذه القطعة توقف توريدها. يتم توريد القطعة المذكورة في السطر السابق بدلاً منها.

▼ هذه القطعة توقف توريدها. يتم توريد القطعة المذكورة في عمود « الوصف » بدلاً منها كطقم.

☆ هذه القطعة لا يمكن توريدها كقطعة منفردة. يتم توريدها كمجموعة.

★ هذه القطعة لا يمكن توريدها كقطعة منفردة. يتم توريدها كمجموعة. على انه يتم توريدها كقطعة منفردة من قبل موزعين معيّنين فقط.

⊙ هذا يشير الى مجموعة قطع.
هذه القطعة لا تعتبر قطعة للتوريد.

==== القطع المحاطة بهذا الخط هي مكونات لمجموعة القطع المذكورة اعلاه.

G-1,G-2 هذا يشير الى فئة مجموعة القطع.
KIT هذا يشير الى مكونات الاطقم التركيبية. بخصوص الاطقم التركيبية، يرجى مراجعة جدول الاطقم التركيبية للخدمة.

△ هذا يشير الى قطعة مورّدة شبه مكتملة التصنيع. تتطلب استكمال تصنيعها قبل الاستعمال.

PAINT(1) هذا يشير الى القطع المشحونة بعد طلائها بطبقة سفلية.
PAINT(2) هذا يشير الى القطع المشحونة بألوان مختلفة.

(A) هذا يشير الى قطع خاصة بمواصفات الطقس البارد من الفئة (A) (-٣٠°م).
(B) هذا يشير الى قطع خاصة بمواصفات الطقس البارد من الفئة (B) (-٥٠°م).

ПРЕДИСЛОВИЕ

При формировании заказа на детали, узлы и агрегаты, кроме их номера детали, наименования и количества, завод-изготовитель просит заказчиков информировать о серийном номере машины и двигателя, для которых делается заказ, а также показании счетчика мото-часов.

В Каталоге приведены не только стандартные агрегаты, но и дополнительные устройства и принадлежности, поставляемые по специальному заказу.
При необходимости приобретении их обратиться к местному дилеру фирмы "Комацу".

Каталог деталей составлен, как ниже изложено:

Рисунки и таблицы деталей

При открытии Каталога на левой странице (чётной) приведен рисунок деталей устройства или агрегата. Каждая деталь обозначена номером позиции.
На правой странице (нечётной) приведена таблица деталей, нарисованных на левой странице, с соответствующим номером детали, наименованием, количеством и серийными номерами машины, для которых предназначена данная деталь, в порядке возрастания номеров позиции.

FIG No. (№ рисунка)

Номер рисунка (фиг.) является собственным для данного рисунка и не является номером показанной детали. Номера рисунков (фиг.) могут быть непорядковыми.

INDEX (Указатель)

В указателе приведены номера позиции деталей на рисунке в порядке возрастания цифр.

PART No. (Номер детали)

При заказе на деталь, установленную на рисунке, следует указать номер, приведенный в данной колонне. Именно этот номер определяет каждую деталь.

DESCRIPTION (Наименование детали)

Приведено наименование детали, соответствующей выбранному номеру детали. Точка "." поставлена перед наименованием каждой составной части устройства. Если составная часть состоит из множества деталей, то эти детали обозначаются двумя точками "..".

Например:
ELEMENT ASSEMBLY, AIR CLEANER
. ELEMENT ASSEMBLY, OUTER
.. ELEMENT, OUTER
.. NUT, WING
.. WASHER

Q'TY (Количество)

Указано количество деталей, необходимое на единицу данного устройства. Для деталей составной части устройства, а также для группы деталей указано их количество на единицу составной части или на группу.

SERIAL No. (Серийные номера)

В части двигателя приведены серийные номера двигателей, а в части шасси — серийные номера машин, в которых применена данная деталь.

Условные обозначения

Условные обозначения, применяемые в колоннах "Номер детали" и "Наименование детали", характеризуют следующее:

- □ Вышеприведенная деталь может заменить настоящую деталь.

Условные обозначения (Продолжение)

- ◙ Настоящая деталь может заменить деталь, приведенную на одну строчку выше.
- ◆ Настоящая деталь и деталь, приведенную на одну строчку выше, имеют взаимозаменяемость.
- ■ Взамен настоящей детали возможно использовать детали, приведенные в колонне "Наименование детали", в комплекте.
- □ Поставка этой детали прекращена. Взамен этой детали поставляется деталь, приведенная на одну строчку выше.
- ▼ Поставка этой детали прекращена. Взамен этой детали поставляются детали, приведенные в колонне "Наименование детали", в комплекте.
- ☆ Настоящая деталь поставляется только в комплекте, а не в отдельности.
- ★ Настоящая деталь поставляется, как правило, только в комплекте, а не в отдельности. Ее можно достать только у отдельных дилеров фирмы "Комацу".
- ◉ Группа деталей.
  Детали не подлежат дополнительной поставке.
- ------ Детали, ограниченные этой линией, составляют вышеприведенную группу деталей.
- G-1, G-2 Обозначения, характеризующие отдельные группы деталей.
- KIT Составляющая комплекта.
  См. таблицы ремонтных комплектов.
- △ Деталь, поставляемая в неготовом виде.
  Перед употреблением необходимо дополнительно обработать.
- PAINT(1) Детали, отгружаемые в загрунтованном виде.
- PAINT(2) Детали, отгружаемые в окрашенном в другой цвет виде.
- (A) Детали, рассчитанные на холодные районы (-30° C)
- (B) Детали, рассчитанные на особо холодные районы (-50° C)

前　言

订购零件时，请注明需要零件的货号、品名、数量以及使用机器的车辆编号、发动机型号和系列号、工作时数。

此零件明细表上不仅记载有标准装备零件，还记载有选购零件、附件零件。如果您需要订货，请与最近的小松代理店联系。

为了清楚明了，零件手册中有如下规定:

图　　表	打开此零件清单后， 在左侧的页上（偶数页）用图示表示按安装的装置上的零件。在图示上标有各种零件的索引号码。 在右侧的页上（奇数页）按照左侧图示上表示的零件索引号码以表格的形式 表示货号、品名、数量、适用机型。
FIG. No.	图号（FIG.）表示该页图的号码，它不时补充零件用的货号。 同时，此号码不一定是连续号码。
INDEX	与图的索引号码一致，按索引号码顺序编制为表格形式。
PART No.	此栏所示的货号是图示零件的货号，它是在订货时需要的标明的特定代号，是非常重要的。
DESCRIP-TION	它表示相当于货号的零件名称。 构成组装品的零件，在品名的前面有标记，记载在组装品之后。 另外，如果标记的零件是组装品，在该构成零件的品名前标有 .. 标记。 例如: ELEMENT ASSEMBLY, AIR CLEANER .ELEMENT ASSEMBLY, OUTER ..ELEMENT, OUTER ..NUT, WING ..WASHER
Q'TY	表示1台机器中需要使用的该零件数量。 但是，如果是组装零件和零件组的构成零件时，表示其组装件的件数。
SERIAL No.	发动机篇中表示该使用零件的发动机型号，在机体篇中表示该使用零件的车辆号码。
代　　号	货号栏和零件品名栏里的代号如下所示: □　　上一行的零件可取代此行零件来使用。

代　　号 （续）	
⊡	此行零件可代替紧接着的上一行零件使用。
◆	此行零件可与紧挨着的上一行零件互换使用。
■	如果将此行零件说明栏内的零件配套后，可取代此零件来使用。
⊠	该行零件已停止供应，用上一行的零件代替使用。
▼	此行零件已停止供应，将此行零件说明栏内的零件配套后代替此零件供应。
☆	此行零件拟成套供应，不以单一零件供应。
★	此行零件拟成套供应，不以单一零件供应，但特定代理除外。
⊙	成组零件，一般不考虑成组供应。
====	用这种符号包括的零件是符号上一行指明成组件的零部件。
G-1,G-2	成组零件编号。
KIT	修理包，关于修理包构件详情，请参考技术服务修理包资料。
△	此行零件以半成品的形式供应，使用前必须再加工。
PAINT(1)	只涂底漆装船。
PAINT(2)	和本体不同颜色装船。
(A)	适用寒冷地区。（－30℃）
(B)	适用极寒冷地区。（－50℃）

CONTENTS

CONTENTS

	FIG. NO	PAGE
ENGINE		
CYLINDER HEAD	A1009-01A4	030010
REAR HANGER	A1050-01A0	030020
HEAD COVER	A111P-01A3	030030
AIR CONNECTOR	A131P-01A8	030040
AIR INTAKE HEATER	A131R-01A0	030050
EXHAUST CONNECTOR CLAMP	A151R-01A0	030070
EXHAUST MANIFOLD GASKET AND BOLT	A151T-01A2	030080
EXHAUST MANIFOLD	A151V-01A2	030090
TURBOCHARGER OIL PIPING (#30380718-36037660)	A153T-01C6	030100
TURBOCHARGER OIL PIPING (#36037661-)	A153T-01C6A	030105
TURBOCHARGER OUT CONNECTION	A153V-01A0	030110
TURBOCHARGER MOUNTING	A1539-01B9	030120
TURBOCHARGER	A1539-01C0	030130
THERMOSTAT HOUSING	A173P-01B0	030140
THERMOSTAT	A173R-01A0	030150
OIL PRESSURE SWITCH	A201V-01A2Z	030160
CYLINDER BLOCK	A2019-01A2	030170
DUST SEAL	A204R-01A0	030180
FRONT COVER	A2049-01A1	030190
CAMFOLLOWER COVER	A206P-01A7	030200
BREATHER HOSE	A2060-01B5	030210
CYLINDER BLOCK COVER (OIL FILLER AND BRACKET)	A207S-01A0	030220
OIL PAN BOLT	A211R-01A2	030230
FLUID LEVEL SENSOR	A2110-01D6	030240
REMOTE ENGINE OIL DRAIN	A2119-01B5	030250
OIL PAN AND SUCTION TUBE	A2119-01B7	030260
OIL LEVEL GAUGE	A219P-01A6	030270
FLYWHEEL HOUSING	A2219-01B4	030280
FLYWHEEL	A223P-01C2	030290
CRANKSHAFT	A2319-01A0	030300
DAMPER	A223P-01A0	030310
PISTON	A2359-01A2	030320
ROCKER ARM	A241P-01A0	030330
TAPPET	A241R-01A0	030340
CAMSHAFT	A2419-01A0	030350
FRONT GEAR TRAIN COVER	A261P-01A1	030360
FAN PULLEY	A267P-01A2Z	030370
TACHOMETER DRIVE COVER	A281P-01A0	030380
UNDER PLATE	A283P-01A0	030390
OIL PUMP	A301P-01A2	030400
OIL COOLER AND OIL FILTER	A331P-01B2	030410
FUEL INJECTION PUMP	A401P-01H6	030420
FUEL INJECTION PUMP (PUMP) (1/2) (INNER PARTS)	A401P-02H6	030430
FUEL INJECTION PUMP (PUMP) (2/2) (INNER PARTS)	A401P-03H6	030440
FUEL INJECTION PUMP (GOVERNOR) (1/3) (INNER PARTS)	A401P-04H6	030450
FUEL INJECTION PUMP (GOVERNOR) (2/3) (INNER PARTS)	A401P-05H6	030460
FUEL INJECTION PUMP (GOVERNOR) (3/3) (INNER PARTS)	A401P-06H6	030470
FUEL INJECTION PUMP (FEED PUMP) (INNER PARTS)	A401P-07H6	030480
BOOST TUBE	A401R-01B2	030490
FUEL INLET AND OUTLET JOINT CAP	A4010-01B0Z	030500
FUEL INJECTION PUMP MOUNTING	A408P-01B0	030510
FUEL FILTER	A411P-01A0	030520
FUEL FILTER PIPING	A411R-01A7	030530
FUEL PIPING	A411S-01C0	030540
CYLINDER BLOCK BLIND COVER AND PIPING	A417P-01B4	030550
INJECTION NOZZLE	A4219-01A6	030560
FUEL JOINT	A423V-01A0Z	030570
WATER PUMP	A501P-01A3	030580
WATER CONNECTOR	A501R-01A0	030590
WATER CONNECTOR PLUG	A501S-01A0	030600
WATER PUMP	A5019-01A0	030610
FAN DRIVE PULLEY	A502P-01D2	030620
COOLING FAN BOLT	A502R-01A1	030630

	FIG. NO	PAGE
FAN PILOT SPACER	A504P-01A3	030640
BELT TENSIONER (FOR 35A¤ 60 ALTERNATOR)	A601S-01F3	030650
ALTERNATOR MOUNTING (FOR 35A¤ 60A ALTERNATOR)	A601T-01B1	030660
BELT GUARD	A601V-01A0	030670
STARTING MOTOR MOUNTING (5.5KM)	A621S-01A8	030680
REPAIR PARTS (1/4) (CYLINDER HEAD)	A8110-01A9	030690
REPAIR PARTS (2/4) (CYLINDER BLOCK)	A8110-02A9	030700
REPAIR PARTS (3/4) (CRANKSHAFT)	A8110-03A9	030710
REPAIR PARTS (4/4) (PISTON)	A8110-04A9	030720
CYLINDER HEAD GASKET KIT	A8128-01A1	030730
CYLINDER BLOCK GASKET KIT	A8128-02A1	030740
SPARE PARTS	B9999-01R0	030750
SPARE PARTS (FOR 35A¤ 60A ALTERNATOR)	B9999-01T5	030760
ENGINE RELATED PARTS		
AIR CLEANER	B0000-01A0	030010
AIR CLEANER (WITH DEFLECTOR BRACKET) (FOR SUGAR CANE) (#B10235-)	B0000-01A1	030015
FRONT HANGER (#B10001-B10012)	B0000-02A0	030020
FUEL RETURN RELATED PARTS	B0000-03A0	030030
HEAT SHIELD	B0000-04A0	030040
ALTERNATOR COVER (FOR 60A ALTERNATOR)	B0000-05A0	030050
MUFFLER AND MOUNTING	B0000-06A0	030060
STOP SOLENOID	B0000-07A0	030070
ALTERNATOR (60A)	B0000-08A0	030080
ALTERNATOR (35A)	B0000-08A1	030081
ALTERNATOR (60A) (INNER PARTS)	B0000-09A0	030090
ALTERNATOR (35A) (INNER PARTS)	B0000-09A1	030091
STARTING MOTOR (5.5KM)	B0000-10A0	030100
STARTING MOTOR (5.5KM) (INNER PARTS)	B0000-11A0	030110
ENGINE MOUNT	B0100-01A0	030120
ENGINE HARNESS (1/2)	B0110-01A1	030130
ENGINE HARNESS (2/2) (STARTER HARNESS AND SENSOR)	B0110-02A0	030140
WATER TEMPERATURE SENSOR	B0110-03A0	030150
EXHAUST PIPE	B0300-01A0	030160
DAMPER	B0600-01A0	030170
COOLING SYSTEM		
RADIATOR	C0110-01A0	060010
RADIATOR (FOR SUGAR CANE) (#B10186-)	C0110-02A0	060020
RADIATOR (FOR SUGAR CANE) (SUPPLY PARTS) (#B10186-)	C0110-03A0	060030
RADIATOR MOUNT	C0110-04A0	060040
RADIATOR MOUNT (FOR SUGAR CANE) (#B10186-)	C0110-04A1	060050
RADIATOR (FAN DRIVE)	C0110-05A0	060060
TRANSFER OIL COOLER	C0110-06A0	060070
TRANSFER OIL COOLER (FOR SUGAR CANE) (#B10186-)	C0110-06A1	060080
COOLING LINE	C0120-01A0	060090
COOLING LINE (FOR SUGAR CANE) (#B10186-)	C0120-01A1	060100
TRANSFER OIL COOLER	C0400-01A0A	060110
FUEL TANK AND RELATED PARTS		
FUEL TANK	D0100-01A0	090010
WATER SEPARATOR	D0100-03A0	090020
ELECTRICAL SYSTEM		
BATTERY	E0110-01A1	120010
BATTERY BOX	E0120-01A1	120020
REAR COMBINATION LAMP AND NUMBER PLATE	E0120-02A2	120030
FRONT HARNESS	E0200-01A3	120040
KOMTRAX (#B10001-B10242)	E0201-01A0	120050
KOMTRAX (#B10243-)	E0201-01A0A	120060
REAR HARNESS (1/4) (MAIN HARNESS)	E0202-01A0	120070
REAR HARNESS (2/4) (RELAY, FUSE AND SUB HARNESS)	E0202-02A0	120080
REAR HARNESS (3/4) (BATTERY CABLE)	E0202-03A0	120090
REAR HARNESS (4/4) (HST HARNESS)	E0202-04A0	120100
REAR HARNESS (PLUG)	E0202-06A3	120110
REAR HARNESS (SWITCH MOUNTING PARTS)	E0202-08A0	120120
FRONT LIGHT	E0300-01A1	120130

	FIG. NO	PAGE
HORN	E0410-01A1	12014
TRANSMISSION		
TRANSFER MOUNT	F2420-01A0	150010
TRANSFER CAP	F2420-02A2	150020
TRANSFER (1/5) (CASE)	F2420-51A0	150030
TRANSFER (2/5) (CLUTCH HOUSING)	F2420-52A0	150040
TRANSFER (3/5) (GEAR)	F2420-53A0	150050
TRANSFER (4/5) (OUTPUT)	F2420-54A0	150060
TRANSFER (5/5) (BRAKE)	F2420-55A0	150070
HST PUMP (#B10001-B10348)	F2430-01A0	150080
HST PUMP (#B10349-)	F2430-01A0A	150085
HST OIL LINE (CHARGE LINE)	F2760-01A0	150090
HST OIL LINE (MAIN LINE)	F2760-02A0	150100
HST OIL LINE (FILTER AND TRANSFER LINE)	F2760-03A0	150110
HST OIL LINE (PUMP DRAIN LINE)	F2760-04A0	150120
HST OIL LINE (QUICK COUPLER LINE)	F2760-05A0	150130
DRIVE SHAFT (FRONT)	F4200-01A0	150140
DRIVE SHAFT (REAR)	F4200-02A0	150150
FRONT AXLE MOUNTING	F4400-01A0	150160
FRONT AXLE (FINAL DRIVE)	F4400-51A0	150170
FRONT AXLE (AXLE HOUSING)	F4400-52A0	150180
FRONT AXLE (DIFFERENTIAL 1/2)	F4400-53A0	150190
FRONT AXLE (DIFFERENTIAL 2/2)	F4400-54A0	150200
FRONT AXLE (BRAKE)	F4400-55A0	150210
FRONT AXLE (MOUNTING PARTS AND PLUG)	F4400-56A0	150220
FRONT AXLE (SLACK ADJUSTER MOUNTING)	F4400-57A0	150230
PARKING BRAKE CONTROL	F4460-01A1	150240
REAR AXLE MOUNTING	F4500-01A0	150250
REAR AXLE (FINAL DRIVE)	F4500-51A0	150260
REAR AXLE (AXLE HOUSING)	F4500-52A0	150270
REAR AXLE (DIFFERENTIAL 1/2)	F4500-53A0	150280
REAR AXLE (DIFFERENTIAL 2/2)	F4500-54A0	150290
REAR AXLE (BRAKE)	F4500-55A0	150300
REAR AXLE (SLACK ADJUSTER MOUNTING)	F4500-56A0	150310
FRONT AXLE (SLACK ADJUSTER MOUNTING)	F4500-57A0	150320
TRANSFER MOUNT	F4810-01A0	150330
HYDRAULIC SYSTEM		
HYDRAULIC TANK	H0110-01A0	180010
MAIN VALVE (FOR 3-SPOOL VALVE)	H0120-01A1	180020
MAIN VALVE	H0120-01A2	180030
HYDRAULIC MAIN VALVE (4-SPOOL VALVE)	H0120-02A2	180040
STEERING VALVE	H0122-01A0	180050
STEERING VALVE (PIPING) (PRIORITY VALVE TO STEERING VALVE)	H0122-02A0	180060
STEERING DEMAND VALVE	H0122-03A0	180070
EMERGENCY STEERING SENSOR LINE	H0122-04A0	180080
HYDRAULIC PUMP	H0210-01A0	180090
FAN DRIVE	H2260-01A0	180100
FAN DRIVE PIPING	H2260-02A0	180110
FAN DRIVE PIPING (FOR SUGAR CANE) (#B10186-)	H2260-02A1	180120
HYDRAULIC PIPING (MAIN LINE 1/2)	H4200-01A0	180130
HYDRAULIC PIPING (MAIN LINE 1/2) (4-SPOOL VALVE)	H4200-01A4	180140
HYDRAULIC PIPING MAIN LINE (2/2)	H4200-02A0	180150
HYDRAULIC PIPING MAIN LINE (2/2) (4-SPOOL VALVE)	H4200-02A4	180160
HYDRAULIC PIPING (RETURN LINE 1/2)	H4200-03A0	180170
HYDRAULIC PIPING (RETURN LINE 1/2) (FOR SUGAR CANE) (#B10186-B10402)	H4200-03A1	180180
HYDRAULIC PIPING (RETURN LINE 1/2) (FOR SUGAR CANE) (#B10403-)	H4200-03A1A	180185
HYDRAULIC PIPING (RETURN LINE 2/2)	H4200-04A0	180190
HYDRAULIC PIPING (RETURN LINE 2/2) (FOR SUGAR CANE) (#B10186-)	H4200-04A1	180200
HYDRAULIC PIPING (PIPING MOUNT)	H4200-05A0	180210
HYDRAULIC PIPING (PIPING MOUNT) (FOR EMERGENCY STEERING, 3-SPOOL VALVE)	H4200-05A2	180220
HYDRAULIC PIPING (PIPING MOUNT) (4-SPOOL VALVE)	H4200-05A4	180230
HYDRAULIC PIPING (PIPING MOUNT) (SUGAR CANE) (#B10403-)	H4200-05A5	180235
HYDRAULIC PIPING (CUT-OFF VALVE)	H4200-06A0	180240
HYDRAULIC PIPING (DUMP CYLINDER LINE)	H4200-07A0	180250
HYDRAULIC PIPING (LIFT CYLINDER LINE)	H4200-08A0	180260

	FIG. NO	PAGE
HYDRAULIC PIPING (BYPASS VALVE)	H4200-09A0	180270
HYDRAULIC PIPING (P.P.C. PIPING 1/2)	H4200-10A0	180280
HYDRAULIC PIPING (P.P.C. PIPING 2/2)	H4200-11A0	180290
HYDRAULIC PIPING (P.P.C. PIPING 2/2) (FOR EMERGENCY STEERING. 3-SPOOL VALVE)	H4200-11A2	180300
HYDRAULIC PIPING (P.P.C. PIPING 2/2) (4-SPOOL VALVE)	H4200-11A4	180310
HYDRAULIC PIPING (LIFT CYLINDER HOSE)	H4200-12A0	180320
HYDRAULIC PIPING (PLUG)	H4200-13A2	180330
HYDRAULIC PIPING (BOOM PIPING) (FOR 3-SPOOL VALVE)	H4200-16A2	180340
HYDRAULIC PIPING (BOOM PIPING) (4-SPOOL VALVE)	H4200-16A4	180350
HYDRAULIC PIPING (HOSE) (FOR 3-SPOOL VALVE)	H4200-17A2	180360
HYDRAULIC PIPING (HOSE) (4-SPOOL VALVE)	H4200-17A4	180370
E.C.S.S. VALVE (INNER PARTS)	H4200-51A0	180380
STEERING LINE	H4410-01A0	180390
STEERING LINE (CUSHION VALVE)	H4410-51A0	180400

MAIN/REVOLVING FRAME AND RELATED PARTS

FRONT FRAME (FOR 3-SPOOL VALVE)	J4110-01A2A	210010
FRONT FRAME (FOR 3-SPOOL VALVE) (WITH PLUG)	J4110-01A4	210020
FRONT FRAME (FOR E.C.S.S.) (4-SPOOL VALVE)	J4110-01A7	210030
REAR FRAME (FOR ADDITIONAL COUNTER WEIGHT)	J4120-01A1	210040
HINGE PIN	J4130-01A0	210050
STEERING CYLINDER	J4140-01A0	210060
BAR LOCK AND COVER (FOR 3-SPOOL VALVE) (WITH PLUG)	J4190-01A0	210070
BAR LOCK AND COVER (FOR 3-SPOOL VALVE)	J4190-01A2	210080
BAR LOCK AND COVER (4-SPOOL VALVE)	J4190-01A3	210090
REAR AXLE SUPPORT	J4210-01A0	210100
REMOTE GREASE (STEERING CYLINDER)	J4710-01A0	210110

OPERATOR'S COMPARTMENT AND CONTROL SYSTEM

OPERATOR'S SEAT (SUSPENSION) (FABRIC TYPE)	K0110-01A7	240010
OPERATOR'S SEAT (SUSPENSION) (FABRIC TYPE) (INNER PARTS)	K0110-01A7A	240020
SEAT BELT (78 MM)	K0160-01A1A	240030
AIR CONDITIONER DUCT (FRONT DUCT)	K0210-01A0	240040
AIR CONDITIONER DUCT (FLOOR DUCT)	K0210-02A0	240050
AIR CONDITIONER DUCT LESS	K0210-02A5	240060
FLOOR (CONSOLE COVER) (L.H.) (FOR MECHA PARKING BRAKE)	K0210-03A5	240070
FLOOR (FLOOR)	K0210-04A0	240080
FLOOR (CONSOLE BOX) (R.H.) (2-LEVER) (#B10001-B10228)	K0210-05A5	240090
FLOOR (CONSOLE BOX) (R.H.) (3-LEVER) (#B10001-B10228)	K0210-05B5	240100
FLOOR (CONSOLE BOX) (R.H.) (#B10229-)	K0210-05C5	240110
FLOOR (CONSOLE BOX) (R.H.) (FOR SUGAR CANE) (#B10186-)	K0210-05D5	240120
FLOOR (CONSOLE BOX) (L.H.) (FOR AIR CONDITIONER LESS)	K0210-06A5	240130
FLOOR (COVER R.H.) (2-LEVER) (#B10001-B10228)	K0210-07A0	240140
FLOOR (COVER R.H.) (3-LEVER) (#B10001-B10228)	K0210-07B0	240150
FLOOR (COVER R.H.) (FOR 2-PERSONS CAB)	K0210-07B1	240160
FLOOR (COVER R.H.) (FOR MONO LEVER) (#B10229-)	K0210-07B3	240170
FLOOR (COVER R.H.) (FOR MONO + 1-ATTACHMENT LEVER) (#B10229-)	K0210-07B4	240180
FLOOR (AIR CONDITIONER)	K0210-08A0	240190
FLOOR (LOADER CONTROL) (1/2) (P.P.C VALVE AND LEVER) (2-LEVER) (#B10001-B10228)	K0210-09A5	240200
FLOOR (LOADER CONTROL) (1/2) (P.P.C VALVE AND LEVER) (3-LEVER) (#B10001-B10228)	K0210-09B5	240210
FLOOR (LOADER CONTROL) (1/2) (P.P.C VALVE AND LEVER) (FOR MONO+MONO LEVER)	K0210-09B6	240220
FLOOR (LOADER CONTROL) (1/2) (P.P.C VALVE AND LEVER) (FOR MONO LEVER) (#B10229-)	K0210-09C5	240230
FLOOR (LOADER CONTROL) (1/2) (P.P.C VALVE AND LEVER) (FOR MONO + 1-ATTACHMENT LEVER) (#B10229-)	K0210-09C6	240240
FLOOR (LOADER CONTROL) (2/2) (HOSE) (2-LEVER) (#B10001-B10228)	K0210-09D5	240250
FLOOR (LOADER CONTROL) (2/2) (HOSE) (3-LEVER) (#B10001-B10228)	K0210-09E5	240260
FLOOR (LOADER CONTROL) (2/2) (HOSE) (FOR MONO+MONO LEVER)	K0210-09E6	240270
FLOOR (LOADER CONTROL) (2/2) (HOSE) (FOR MONO LEVER) (#B10229-)	K0210-09F5	240280
FLOOR (LOADER CONTROL) (2/2) (HOSE) (FOR MONO + 1-ATTACHMENT LEVER) (#B10229-)	K0210-10A0	240290
FLOOR (BRAKE CONTROL)	K0210-11A0	240300
FLOOR (INCHING BRAKE)	K0210-12A0	240310
FLOOR (HST CONTROLLER) (#B10001-B10228)	K0210-13A0	240320

	FIG. NO	PAGE
FLOOR (HST CONTROLLER) (#B10229-)	K0210-13A1	240330
FLOOR (HEATER PIPING) (#B10001-B10228)	K0210-14A0	240340
FLOOR (AIR CONDITIONER PIPING)	K0210-15A0	240350
FLOOR (ELECTRICAL) (STARTING SWITCH)	K0210-16A5	240360
FLOOR (WIPER SWITCH)	K0210-17A0	240370
FLOOR (WASHER HOSE) (#B10001-B10228)	K0210-18A0	240380
FLOOR (WASHER HOSE) (#B10229-)	K0210-18B0	240390
FLOOR (FLOOR HARNESS) (MAIN HARNESS) (#B10001-B10228)	K0210-19A5	240400
FLOOR (FLOOR HARNESS) (MAIN HARNESS) (#B10229-)	K0210-19B5	240410
FLOOR (EARTH)	K0210-20A0	240420
FLOOR (ELECTRICAL PARTS) (#B10001-B10228)	K0210-21A5	240430
FLOOR (ELECTRICAL PARTS) (#B10229-)	K0210-22A0	240440
FLOOR (WIRING HARNESS) (PLUG) (#B10001-B10228)	K0210-23A5	240450
FLOOR (MAIN MONITOR) (#B10001-B10228)	K0210-25A5	240460
FLOOR (MAIN MONITOR) (FOR DIGITAL MONITOR) (#B10229-)	K0210-25B5	240470
FLOOR (ENGINE CONTROLLER)	K0210-26A0	240480
STEERING DEMAND VALVE	K0210-27A0	240490
FLOOR (LOADER CONTROL) (2/2) (HOSE) (FOR DIGITAL MONITOR AND 3 LEVER)	K0210-27A0A	240500
STEERING WHEEL (VALVE MOUNT)	K0210-28A0	240510
STEERING WHEEL (COLUMN AND ORBITROL) (#B10001-B10208)	K0210-29A0	240520
STEERING WHEEL (COLUMN AND ORBITROL) (#B10209-)	K0210-29A0A	240530
TRANSMISSION CONTROL	K0210-30A0	240540
COOL AND HEAT BOX	K0210-31A7	240550
FLOOR (COVER)	K0210-32A5	240560
FLOOR (CONSOLE BOX) (R.H.) (COVER) (#B10229-)	K0210-32A6	240570
FLOOR (CAP)	K0210-33A0	240580
HAND RAIL	K0210-34A0	240590
WORKING LAMP AND PLACE	K0210-35A5	240600
FLOOR (PARKING BRAKE)	K0210-37A5	240610
FLOOR (AIR CONDITIONER LESS)	K0210-38A5	240620
FLOOR (AIR DUCK) (AIR CONDITIONER LESS)	K0210-39A5	240630
FLOOR (ANTENNA, SPEAKER COVER)	K0210-40A5	240640
FLOOR (ANTENNA, SPEAKER)	K0210-40A6	240650
FLOOR (ELECTRICAL) (RELAY)	K0210-41A5	240660
ROPS CAB (BODY, GLASS)	K0210-51A5	240670
ROPS CAB (ROOF PAD) (#B10001-B010016)	K0210-52A5	240680
ROPS CAB (ROOF PAD) (#B10017-)	K0210-52A5A	240690
ROPS CAB (WIPER)	K0210-53A5	240700
ROPS CAB (SHEET, COVER)	K0210-54A5	240710
ROPS CAB (DOOR L.H) (#B10001-B10145)	K0210-55A5	240720
ROPS CAB (DOOR L.H) (#B10146-)	K0210-55A5A	240730
ROPS CAB (DOOR R.H.) (#B10001-B10145)	K0210-56A5	240740
ROPS CAB (DOOR R.H.) (#B10146-)	K0210-56A5A	240750
ROPS CAB (STOPPER)	K0210-57A5	240760
ROPS CAB (MARK)	K0210-58A5	240770
ROPS CAB (COVER) (#B10001-B10228)	K0210-59A5	240780
ROPS CAB (COVER)	K0210-59B5	240790
FLOOR MAT	K0310-01A0	240800
WINDOW WASHER	K0350-01A0	240810
AIR CONDITIONER	K0710-01A0	240820
AIR CONDITIONER (MOUNTING AND PIPING)	K0711-01A0	240830
AIR CONDITIONER (PIPING)	K0711-02A0	240840
AIR CONDITIONER (CONDENSER MOUNTING)	K0711-03A0	240850
AIR CONDITIONER (CONDENSER MOUNTING) (FOR SUGAR CANE) (#B10235-)	K0711-04A0	240860
HEATER PIPING	K0713-01A0	240870
RADIO (COVER) (FOR EXCEPT JAPAN)	K0810-01A1	240880
RADIO (AM, FM) (CASSETE)	K0810-01A3	240890
FLOOR SUPPORT	K4100-01A0	240900
AUTO-REVERSE FAN CONTROL (FOR SUGAR CANE) (#B10186-B10234)	K4200-01A0	240910
AUTO-REVERSE FAN CONTROL (FOR SUGAR CANE) (#B10235-)	K4200-01A1	240920
GAUGE AND SENSOR	K4220-01A0	240930
ENGINE CONTROL	K4410-01A0	240940
INCHING CONTROL	K4450-01A0	240950
BRAKE CONTROL (CHARGE VALVE)	K4460-01A1	240960
BRAKE CONTROL (ACUMULATOR)	K4460-02A1	240970

	FIG. NO	PAGE
BRAKE CONTROL (BRAKE PIPING)	K4460-03A0	240980
CHARGE VALVE (BRAKE) (INNER PARTS)	K4460-51A1	240990
BRAKE PIPING	K4470-01A0	241000
BUCKET POSITIONER	K4504-01A0	241010
GUARD		
HOOD	M4100-01A0	270010
HOOD (FOR SUGAR CANE) (#B10235-)	M4100-01A1	270020
HOOD (BULK HEAD)	M4100-02A0	270030
HOOD (BULK HEAD) (FOR SUGAR CANE) (#B10186-)	M4100-02A1	270040
HOOD (DOOR)	M4100-03A0	270050
HOOD (DOOR) (FOR SUGAR CANE) (#B10186-)	M4100-03A1	270060
HOOD (RADIATOR GUARD)	M4100-04A2	270070
HOOD (RADIATOR GUARD) (FOR SUGAR CANE) (#B10186-B10234)	M4100-04A3	270080
HOOD (RADIATOR GUARD) (FOR SUGAR CANE) (#B10235-)	M4100-04A3A	270090
HOOD (SHEET) (#B10001-B10081)	M4100-05A0	270100
HOOD (SHEET) (#B10082-)	M4100-05A0A	270110
HOOD (SHEET) (FOR SUGAR CANE) (#B10186-)	M4100-05A1	270120
HOOD (DUCT COVER)	M4100-06A0	270130
HOOD (DUCT COVER) (FOR SUGAR CANE) (#B10186-B10355)	M4100-06A1	270140
HOOD (DUCT COVER) (FOR SUGAR CANE) (#B10356-)	M4100-06A1A	270150
HOOD MOUNTING	M4100-07A0	270160
HOOD MOUNTING (FOR SUGAR CANE) (#B10186-)	M4100-07A1	270170
HOOD (COVER AND STRINKER)	M4100-08A0	270180
HOOD (CAP)	M4100-09A0	270190
HOOD (CAP) (FOR SUGAR CANE) (#B10186-)	M4100-09A1	270200
HOOD (PRE-CLEANER)	M4100-09A2	270210
HOOD (PRE-CLEANER) (SUGAR CANE)	M4100-09A2A	270220
HOOD (RADIATOR PIPING AND BUFFLE PLACE)	M4100-10A0	270230
HOOD (RADIATOR PIPING AND BUFFLE PLACE) (FOR SUGAR CANE) (#B10186-)	M4100-10A1	270240
HOOD (DUCT SHEET)	M4100-11A2	270250
HOOD (DUCT SHEET) (FOR SUGAR CANE) (#B10186-)	M4100-11A3	270260
HOOD (COVER)	M4100-13A2	270270
REAR FENDER	M4200-01A0	270280
FRONT FENDER	M4210-01A0	270290
FLOOR COVER	M4230-01A0	270300
LADDER	M4310-01A0	270310
MIRROR	M4410-01A1	270320
COUNTER WEIGHT (ADDITIONAL WEIGHT)	M4510-01A3	270330
COUNTER WEIGHT (ADDITIONAL WEIGHT) (SUGAR CANE)	M4510-01A4	270340
COUNTER WEIGHT (ADDITIONAL WEIGHT) (TROPICAL SPEC)	M4510-01A5	270341
SUSPENSION AND WHEEL RELATED PARTS		
RIM (FOR 20.5-25 TUBELESS TIRE)	S0110-01A0	300010
TIRE (20.5-25-12PR-L3. TUBELESS TIRE)	S0120-01A0	300020
TIRE (20.5-25-16PR-L3, TUBE LESS)	S0120-01A1	300030
TIRE (20.5-25-L2)	S0120-01A1A	300040
TIRE (20.5R25-L3, TUBELESS TIRE)	S0120-01A2	300050
WORK EQUIPMENT		
LIFT ARM AND BELLCRANK	T4110-01A0	330010
LIFT ARM AND BELLCRANK (3-SPOOL VALVE)	T4110-01A1	330020
LIFT ARM AND BELLCRANK (MOUNTING PARTS)	T4110-02A0	330030
LIFT ARM AND BELLCRANK (BOOM KICK OUT)	T4110-03A0	330040
BUCKET 2.5M3 (WITH B.O.C. 2.7M3)	T4120-01A5	330050
BOLT ON CUTTING EDGE	T4122-01A1	330060
SEGMENT EDGE (#B10235-)	T4125-01A0	330070
TOOTH (TIP TYPE)	T4130-01A1	330080
LIFT CYLINDER	T4140-01A0	330090
BUCKET CYLINDER	T4150-01A0	330100
MARKS AND PLATES		
MARKS AND PLATES (PORTUGUESE)	U0100-01A0	360010
MARKS AND PLATES (PORTUGUESE) (FOR SUGAR CANE) (#B10186-)	U0100-01A1	360020
MARKS AND PLATES (SPANISH)	U0100-01A2	360030
FLOOR DECAL (PORTUGUESE)	U0100-02A0	360040

	FIG. NO	PAGE
FLOOR DECAL (SPANISH)	U0100-02A0A	360050
KOMTRAX PLATE (#B10345-)	U0205-01A0	360060
ACCESSORY AND TOOL		
SPARE PARTS	V0100-01A1	390010
TOOL	V0300-01A1	390020
LOCK	V0300-01A5	390030
SERVICE KIT AND COMPONENT PARTS		
PUMP (1/12)	Y1610-01A0	420010
PUMP (2/12)	Y1610-02A0	420020
PUMP (3/12)	Y1610-03A0	420030
PUMP (4/12)	Y1610-04A0	420040
PUMP (5/12)	Y1610-05A0	420050
PUMP (6/12)	Y1610-06A0	420060
PUMP (7/12)	Y1610-07A0	420070
PUMP (8/12)	Y1610-08A0	420080
PUMP (9/12)	Y1610-09A0	420090
PUMP (10/12)	Y1610-10A0	420100
PUMP (11/12)	Y1610-11A0	420110
PUMP (12/12)	Y1610-12A0	420120
TORQUE CONVERTER AND P.P.C. PUMP (INNER PARTS) (1/4)	Y1610-31A0	420130
TORQUE CONVERTER AND P.P.C. PUMP (INNER PARTS) (2/4)	Y1610-32A0	420140
TORQUE CONVERTER AND P.P.C. PUMP (INNER PARTS) (3/4)	Y1610-33A0	420150
TORQUE CONVERTER AND P.P.C. PUMP (INNER PARTS) (4/4)	Y1610-34A0	420160
LIFT CYLINDER (INNER PARTS)	Y1620-01A0	420170
BUCKET CYLINDER (INNER PARTS)	Y1620-11A0	420180
STEERING CYLINDER (INNER PARTS)	Y1622-01A0	420190
MOTOR (1/6) (#B10001-B10348)	Y1651-01A0	420200
MOTOR (1/6) (#B10349-)	Y1651-01A0A	420210
MOTOR (1/7) (#B10001-B10348)	Y1651-01A1	420220
MOTOR (1/7) (#B10349-)	Y1651-01A1A	420230
MOTOR (2/6) (#B10001-B10348)	Y1651-02A0	420240
MOTOR (2/6) (#B10349-)	Y1651-02A0A	420250
MOTOR (3/6) (#B10001-B10348)	Y1651-03A0	420260
MOTOR (3/6) (#B10349-)	Y1651-03A0A	420270
MOTOR (4/6) (#B10001-B10348)	Y1651-04A0	420280
MOTOR (4/6) (#B10349-)	Y1651-04A0A	420290
MOTOR (4/7) (#B10001-B10348)	Y1651-04A1	420300
MOTOR (4/7) (#B10349-)	Y1651-04A1A	420310
MOTOR (5/6) (#B10001-B10348)	Y1651-05A0	420320
MOTOR (5/6) (#B10349-)	Y1651-05A0A	420330
MOTOR (5/7) (#B10001-B10348)	Y1651-05A1	420340
MOTOR (5/7) (#B10349-)	Y1651-05A1A	420350
MOTOR (6/6) (#B10001-B10348)	Y1651-06A0	420360
MOTOR (6/6) (#B10349-)	Y1651-06A0A	420370
MOTOR (6/7) (WITH ORIFICE) (#B10001-B10348)	Y1651-06A1	420380
MOTOR (6/7) (WITH ORIFICE) (#B10349-)	Y1651-06A1A	420390
MOTOR (7/7) (WITHOUT ORIFICE) (#B10001-B10348)	Y1651-07A1	420400
MOTOR (7/7) (WITHOUT ORIFICE) (#B10349-)	Y1651-07A1A	420410
CONTROL VALVE (2-SPOOL) (1/2)	Y1662-01A0	420420
CONTROL VALVE (2-SPOOL VALVE) (2/2)	Y1662-02A0	420430
CONTROL VALVE (2-SPOOL) (1/2) (FOR ADDITIONAL 2-SPOOL VALVE)	Y1662-11A0	420440
CONTROL VALVE (2-SPOOL) (2/2) (FOR ADDITIONAL 2-SPOOL VALVE)	Y1662-12A0	420450
CONTROL VALVE (3-SPOOL) (1/3)	Y1663-01A0	420460
CONTROL VALVE (3-SPOOL) (2/3)	Y1663-02A0	420470
CONTROL VALVE (3-SPOOL) (3/3)	Y1663-03A0	420480
PPC VALVE (FOR 2-LEVER) (#B10001-B10228)	Y1670-01A1	420490
PPC VALVE (FOR MONO LEVER) (#B10229-)	Y1670-01A1A	420500
PPC VALVE (FOR ATTACHMENT)	Y1670-01A2	420510
CUT-OFF VALVE	Y1679-01A0	420520
VALVE (1/4)	Y1682-01A0	420530
VALVE (2/4)	Y1682-02A0	420540
VALVE (3/4)	Y1682-03A0	420550
VALVE (4/4)	Y1682-04A0	420560
AIR CONDITIONER UNIT (INNER PARTS)	Y1979-01A0	420570
AIR CONDITIONER UNIT (1/2) COOLING (INNER PARTS)	Y1979-02A0	420580
AIR CONDITIONER UNIT (2/2) BLOWER (INNER PARTS)	Y1979-03A0	420590

	FIG. NO	PAGE
DAMPER (INNER PARTS)	Y1979-04A0	420600
AIR DUCT (INNER PARTS)	Y1979-05A0	420610

NUMERICAL INDEX

	FIG. NO	PAGE
NUMERICAL INDEX	NO FIGURE Nº	INDEX

ENGINE

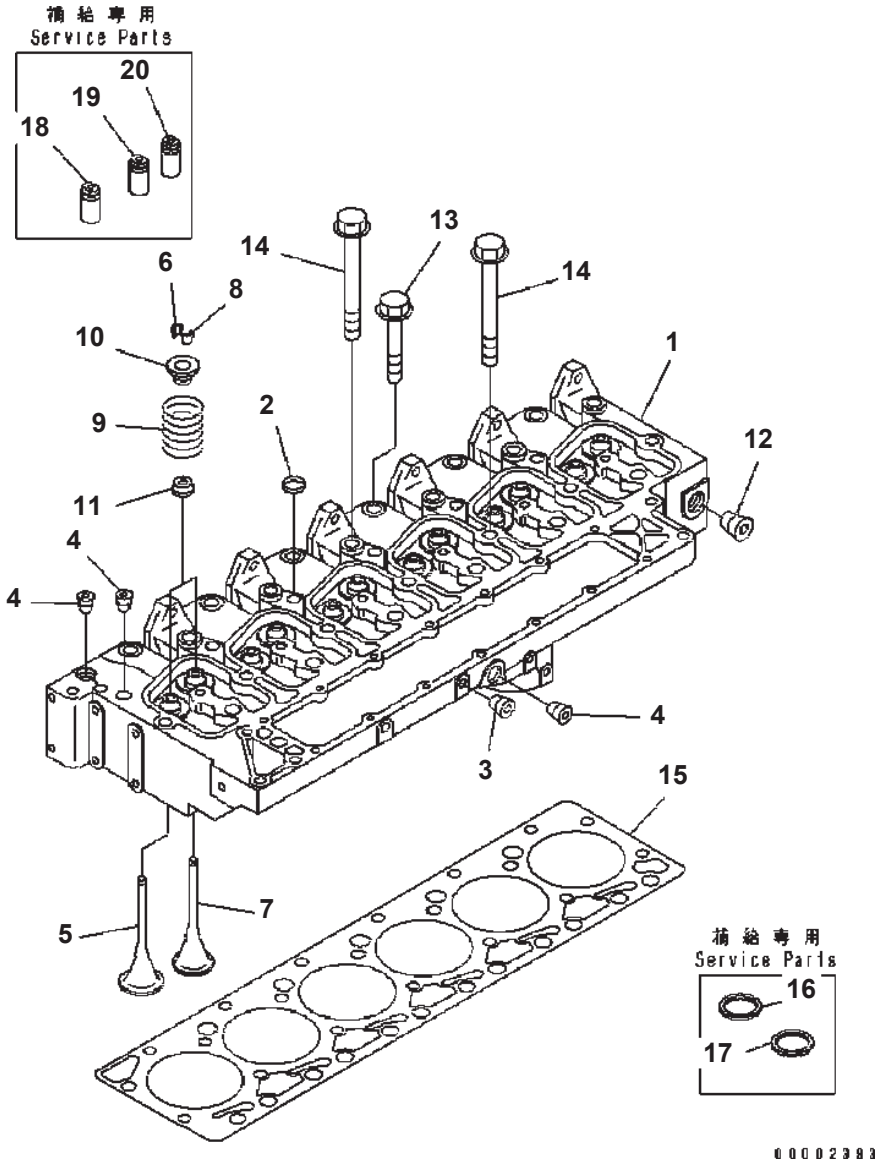

CYLINDER HEAD

Item	Part No.	Description	Qty	Options
	6735-11-1201	HEAD ASS'Y	1	SN:30380718--
1	☆	· HEAD	1	SN:30380718--
2	6736-11-1150	· · PLUG	5	SN:30380718--
3	6732-11-1930	· · PLUG	2	SN:30380718--
4	6732-11-1910	· · PLUG	5	SN:30380718--
	6736-41-4110	· · INTAKE VALVE ASS'Y	6	SN:30380718--
5	☆	· · · VALVE	1	SN:30380718--
6	6732-41-4520	· · · COTTER	12	SN:30380718--
7	6736-41-4210	· · EXHAUST VALVE ASS'Y	6	SN:30380718--
	☆	· · · VALVE	1	SN:30380718--
8	6732-41-4520	· · · COTTER	12	SN:30380718--
9	6732-41-4430	· · SPRING	12	SN:30380718--
10	6731-41-4510	· · RETAINER	12	SN:30380718--
11	6732-41-4540	· · SEAL	12	SN:30380718--
12	6732-11-1920	· · PLUG	1	SN:30380718--
13	6732-11-1610	BOLT	6	SN:30380718--
14	6732-11-1620	BOLT	14	SN:30380718--
15	6735-11-1821	GASKET	1	SN:30380718--
16	6732-11-1170	INSERT, EXHAUST	6	SN:30380718--
17	6732-11-1180	INSERT, INTAKE	6	SN:30380718--
18	6736-19-1310	GUIDE¤ 60.50MM	AR	SN:30380718--
19	6736-19-1410	GUIDE¤ 51.75MM	AR	SN:30380718--
20	6736-18-1310	GUIDE	AR	SN:30380718--

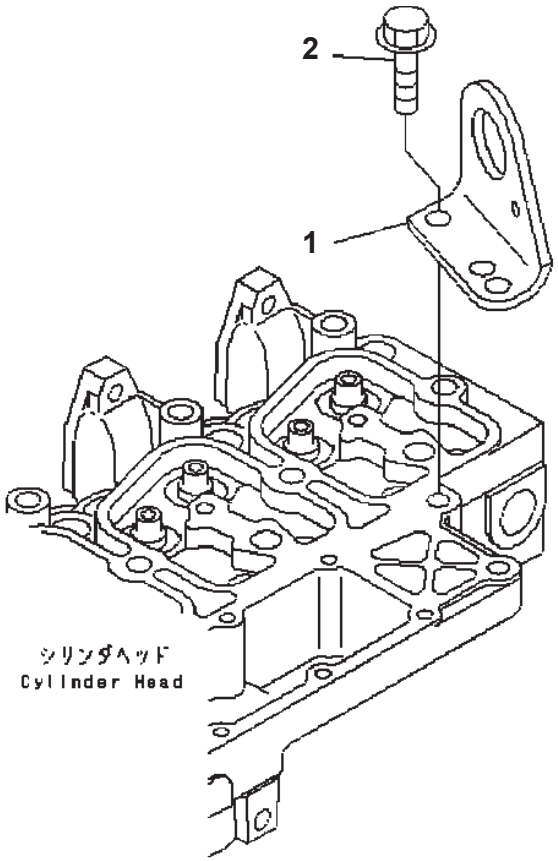

REAR HANGER

Item	Part No.	Description	Qty	Options
1	6732-11-1710	BRACKET, LIFTING	1	SN:30380718--
2	6732-11-1720	BOLT	2	SN:30380718--

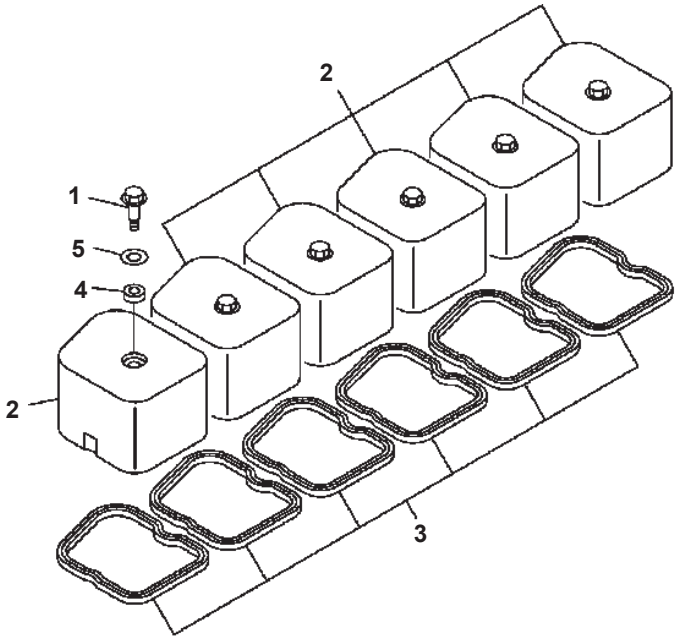

SAA6D102E-2 S/N 30380718-UP

HEAD COVER

Item	Part No.	Description	Qty	Options
1	6732-11-8130	BOLT	6	SN:30380718--
2	6735-11-8120	COVER	6	SN:30380718--
3	6732-11-8181	GASKET (K1)	6	SN:30380718--
4	6732-11-8210	GASKET (K1)	6	SN:30380718--
5	6732-11-8150	WASHER	6	SN:30380718--

Ref. A111P-01A3 Page 030030

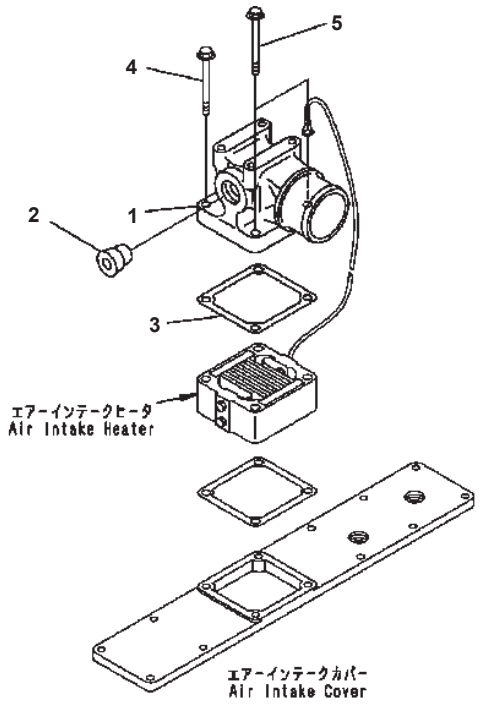

00000169

SAA6D102E-2 S/N 30380718-UP

AIR CONNECTOR

Item	Part No.	Description	Qty	Options
1	6738-11-4430	CONNECTOR	1	SN:30380718--
2	6732-11-1920	PLUG	1	SN:30380718--
3	6732-11-4812	GASKET (K1)	1	SN:30380718--
4	6732-11-4170	BOLT	2	SN:30380718--
5	6732-11-4150	BOLT	2	SN:30380718--

Ref. A131P-01A8 Page 030040

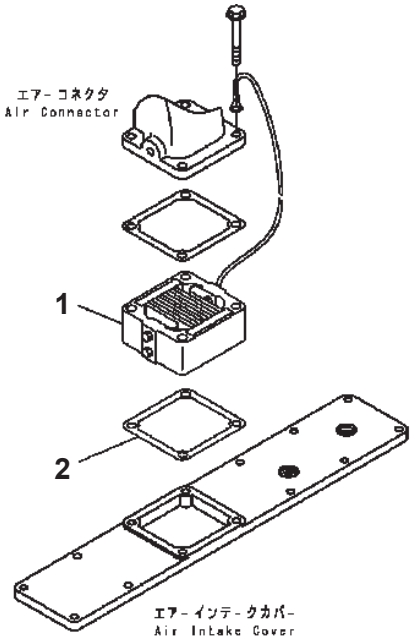

AIR INTAKE HEATER

Item	Part No.	Description	Qty	Options
1	6754-81-5110	HEATER ASS'Y	1	SN:30382362--
	6743-82-4110	HEATER ASS'Y	1	SN:30380718--30382361
2	6754-11-4120	GASKET (K1)	1	SN:30380718--

@@6B414@

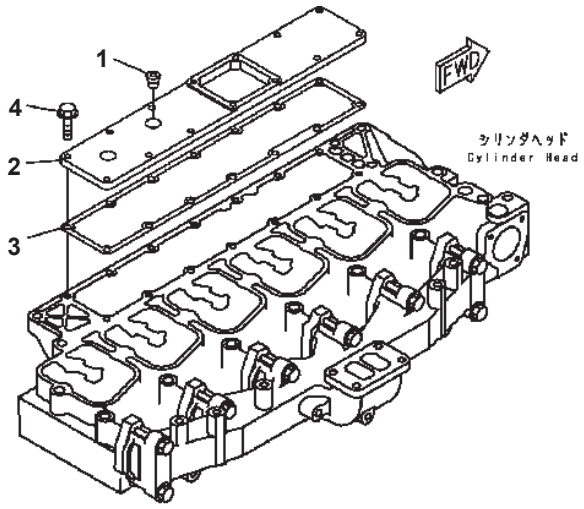

SAA6D102E-2 S/N 30380718-UP

AIR INTAKE COVER

Item	Part No.	Description	Qty	Options
1	6732-11-1910	PLUG	2	SN:30380718--
2	6735-11-4110	COVER {INTAKE}	1	SN:30380718--
3	6735-11-4811	GASKET (K1)	1	SN:30380718--
4	6732-11-4160	BOLT	8	SN:30380718--

Ref. A131V-01A0 Page 030060

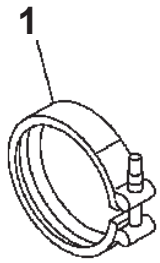

PMD1036

SAA6D102E-2 S/N 30380718-UP

EXHAUST CONNECTOR CLAMP

Item	Part No.	Description	Qty	Options
1	6732-81-8220	CLAMP (K1)	1	SN:30380718--

Ref. A151R-01A0 Page 030070

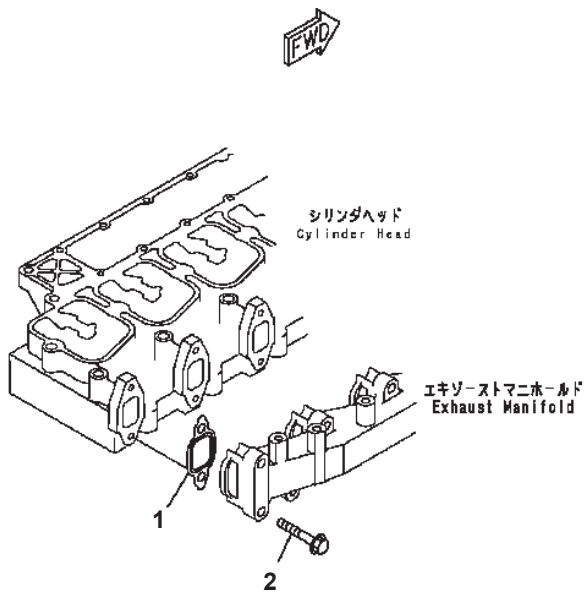

PFD1324

SAA6D102E-2 S/N 30380718-UP

EXHAUST MANIFOLD GASKET AND BOLT

Item	Part No.	Description	Qty	Options
1	6736-11-5820	GASKET	6	SN:30380718--
2	6732-11-5530	BOLT	12	SN:30380718--

Ref. A151T-01A2 Page 030080

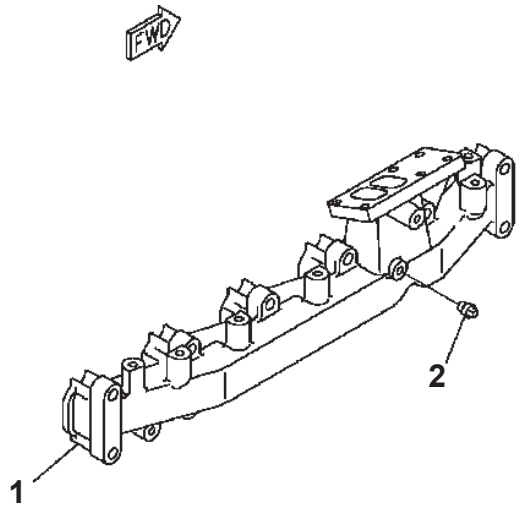

SAA6D102E-2 S/N 30380718-UP

EXHAUST MANIFOLD

Item	Part No.	Description	Qty	Options
1	6735-11-5220	MANIFOLD, EXHAUST	1	SN:30380718--
2	07042-00108	PLUG	1	SN:30380718--

Ref. A151V-01A2 Page 030090

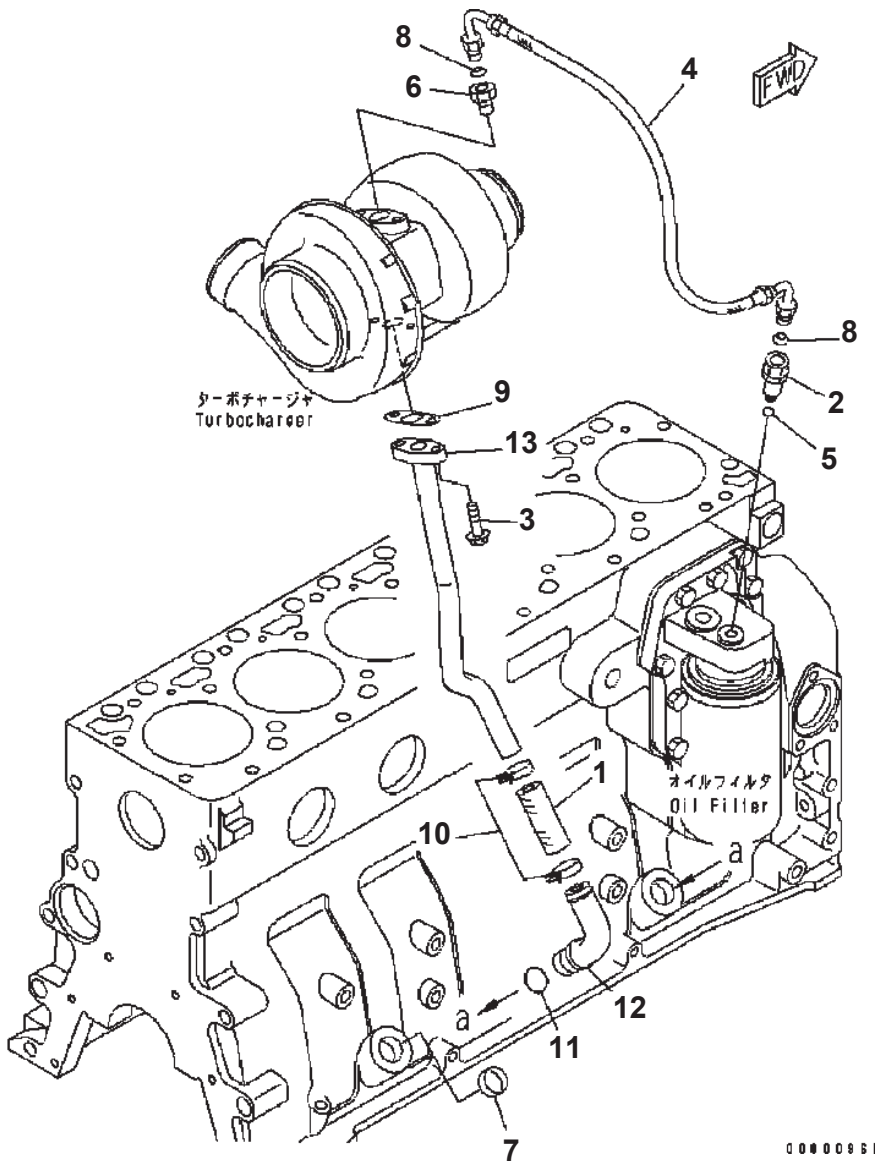

TURBOCHARGER OIL PIPING (#30380718-36037660)

Item	Part No.	Description	Qty	Options
1	6736-21-6110	HOSE	1	SN:30380718--36037660
2	6732-51-8480	VALVE, CHECK	1	SN:30380718--36037660
	☆	· O-RING	1	SN:30380718--36037660
	☆	· BALL, VALVE	1	SN:30380718--36037660
	☆	· ADAPTER	1	SN:30380718--36037660
	☆	· RETAINER	1	SN:30380718--36037660
3	6732-71-3220	BOLT	2	SN:30380718--36037660
4	6736-51-8130	HOSE	1	SN:30380718--36037660
5	6736-51-8710	O-RING (K1)	1	SN:30380718--36037660
6	6736-51-8140	CONNECTOR ASS'Y	1	SN:30380718--36037660
	☆	· O-RING	1	SN:30380718--36037660
	☆	· CONNECTOR	1	SN:30380718--36037660
7	6735-21-5530	PLUG	1	SN:30380718--36037660
8	6736-51-8730	WASHER	2	SN:30380718--36037660
9	6735-51-8180	GASKET	1	SN:30380718--36037660
10	6734-71-5170	CLAMP	2	SN:30380718--36037660
11	6731-51-8150	O-RING	1	SN:30380718--36037660
12	6731-51-8170	TUBE	1	SN:30380718--36037660
13	6731-51-8190	TUBE, OIL	1	SN:30380718--36037660

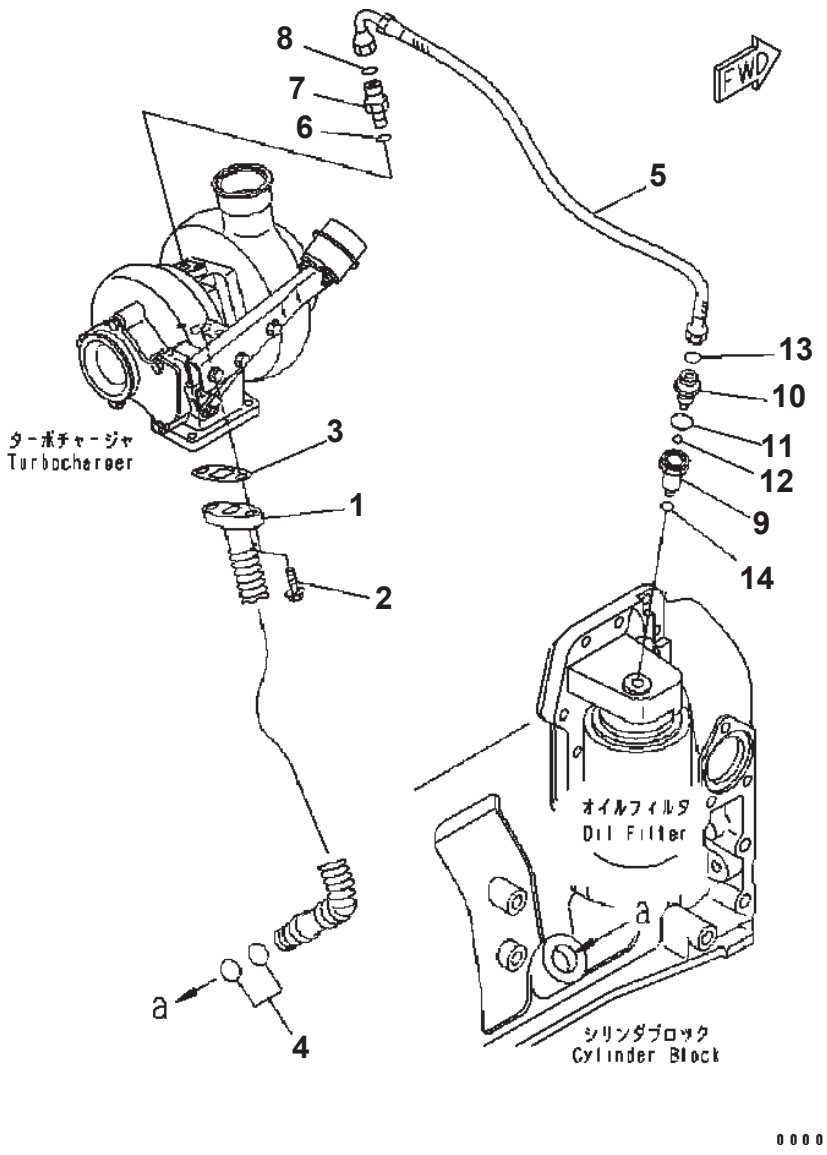

TURBOCHARGER OIL PIPING (#36037661-)

Item	Part No.	Description	Qty	Options
1	6732-51-8430	TUBE, OIL	1	SN:36037661--
2	6732-71-3220	BOLT	2	SN:36037661--
3	6735-51-8180	GASKET	1	SN:36037661--
4	6732-51-8330	O-RING	2	SN:36037661--
5	6735-51-8140	HOSE	1	SN:36037661--
6	6736-51-8710	O-RING	1	SN:36037661--
7	6745-61-8160	CONNECTOR	1	SN:36037661--
8	6732-81-8860	O-RING	1	SN:36037661--
	6732-51-8441	VALVE, CHECK	1	SN:36037661--
9	☆	· ADAPTER	1	SN:36037661--
10	☆	· NIPPLE	1	SN:36037661--
11	☆	· O-RING	1	SN:36037661--
12	☆	· BALL	1	SN:36037661--
13	6732-81-8860	O-RING	1	SN:36037661--
14	6737-51-8770	O-RING	1	SN:36037661--

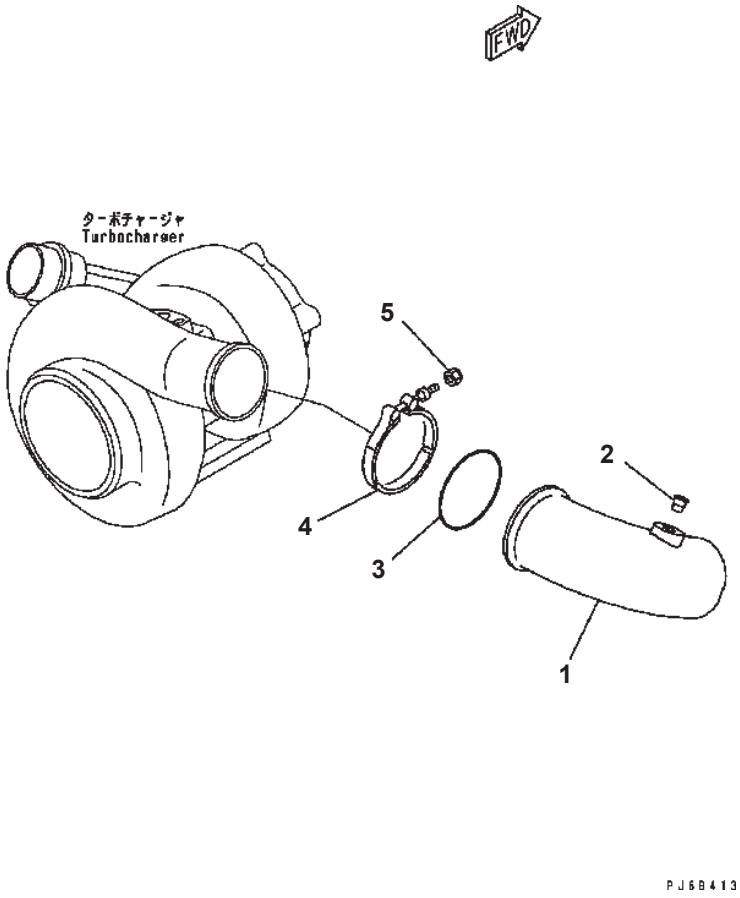

SAA6D102E-2 S/N 30380718-UP

TURBOCHARGER OUT CONNECTION

Item	Part No.	Description	Qty	Options
1	6738-11-4320	PIPE {AIR}	1	SN:30380718--
2	07043-70108	PLUG	1	SN:30380718--
3	6738-11-4370	O-RING (K1)	1	SN:30380718--
4	6738-11-4380	CLAMP	1	SN:30380718--
5	6738-11-4390	NUT	1	SN:30380718--

Ref. A153V-01A0 Page 030110

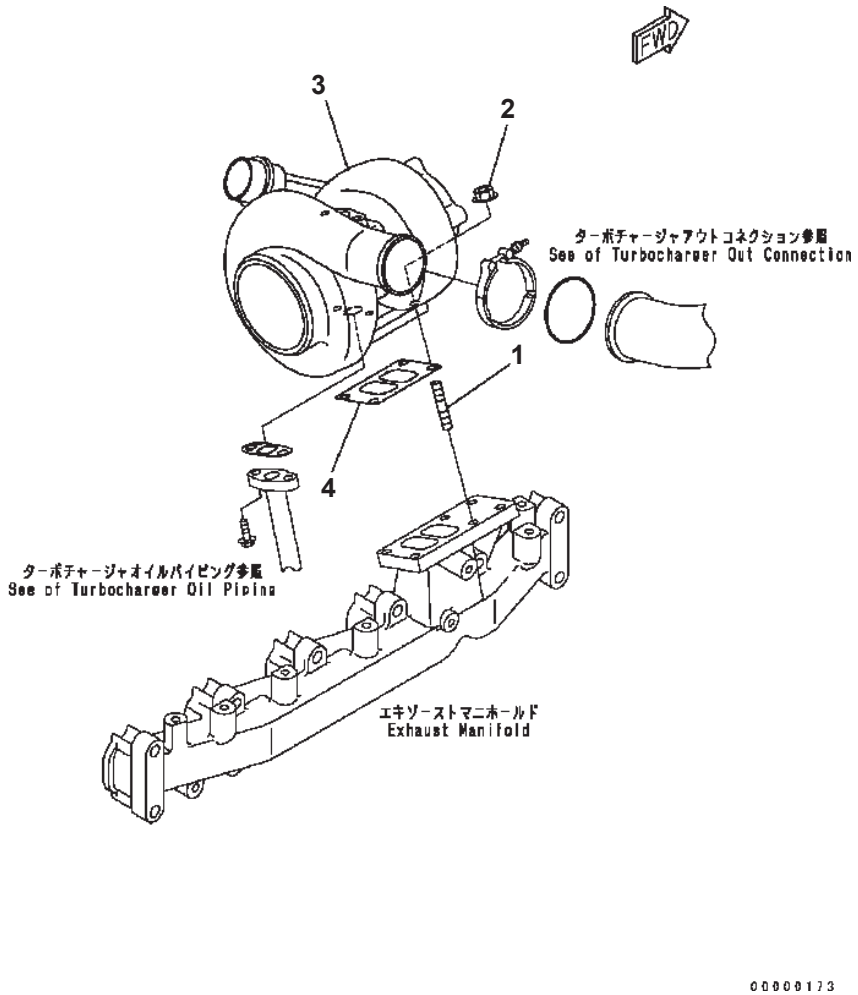

TURBOCHARGER MOUNTING

Item	Part No.	Description	Qty	Options
1	6738-82-8810	STUD	4	SN:30380718--
2	6732-81-8820	NUT, HEXAGON FLANGE	4	SN:30380718--
	6736-82-8020	TURBOCHARGER ASS'Y	1	SN:30380718--
3	☆	· TURBOCHARGER	1	SN:30380718--
4	6732-81-8830	· GASKET, TURBOCHARGER	1	SN:30380718--

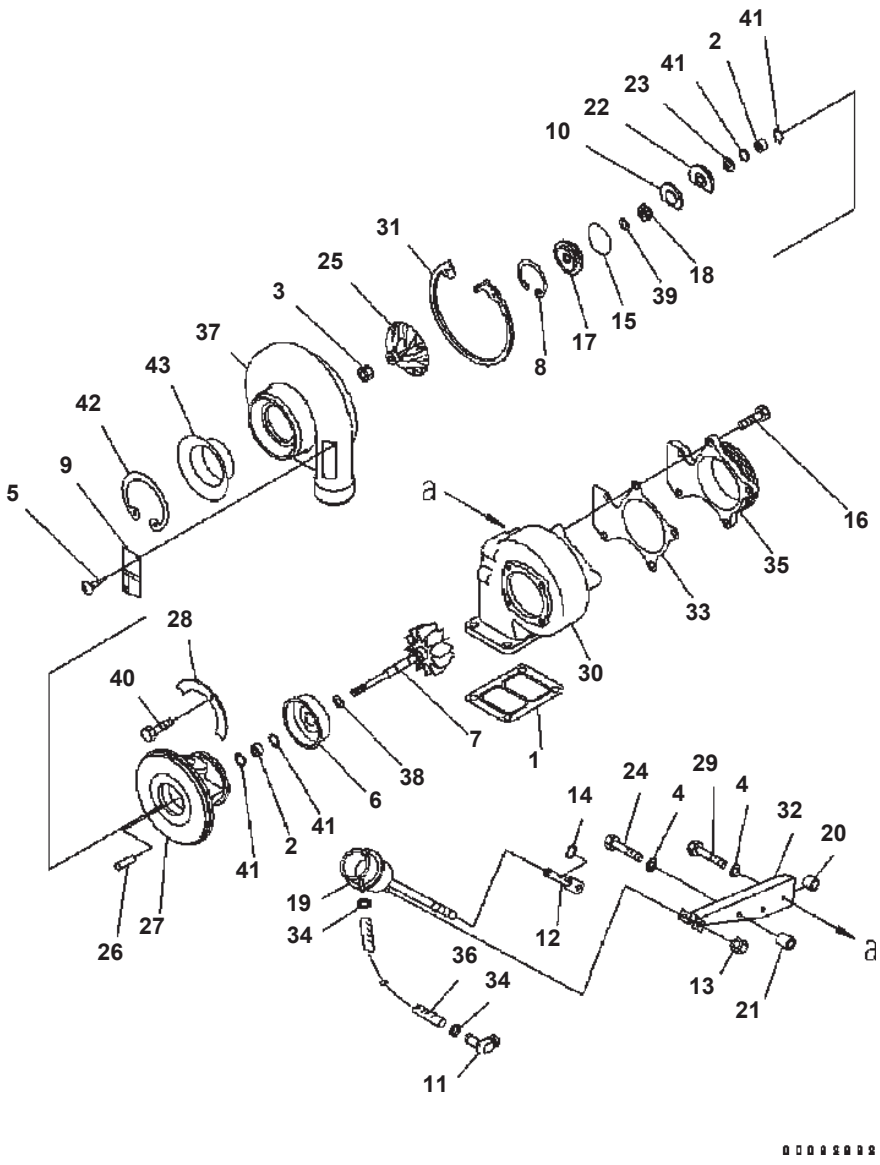

TURBOCHARGER

Item	Part No.	Description	Qty	Options
	6736-82-8020	KIT, (SEE FIG. A1539-01B9)	1	SN:30380718--
	☆	· TURBOCHARGER	1	SN:30380718--
1	(6732-81-8830)	· · GASKET (SEE FIG. A1539-01B9)	1	SN:30380718--
2	6736-81-8370	· · BEARING, TURBOCHARGER	2	SN:30380718--
3	6731-82-8210	· · NUT, LOCK	1	SN:30380718--
4	6733-81-8650	· · WASHER, PLAIN	3	SN:30380718--
5	6736-81-8480	· · SCREW	2	SN:30380718--
6	6736-81-8430	· · SHIELD, TURBOCHARGER HEAT	1	SN:30380718--
7	6736-81-8280	· · ROTOR	1	SN:30380718--
8	6733-81-8360	· · RING, RETAINING	1	SN:30380718--
9	6736-81-8470	· · PLATE	1	SN:30380718--
10	6733-81-8330	· · BAFFLE, OIL	1	SN:30380718--
11	6732-81-8140	· · COUPLING, ELBOW HOSE	1	SN:30380718--
12	☆	· · END, ADJUSTING LINK	1	SN:30380718--
13	6743-82-8610	· · NUT, HEXAGON FLANGE	2	SN:30380718--
14	6733-81-8370	· · RING, RETAINING	1	SN:30380718--
15	6733-81-8460	· · O-RING, SEAL	1	SN:30380718--
16	6733-81-8380	· · BOLT, (M8-1.25X20)	5	SN:30380718--
17	6733-81-8270	· · PLATE, OIL SEAL	1	SN:30380718--
18	6733-81-8260	· · SLINGER, OIL	1	SN:30380718--
19	☆	· · ACTUATOR, TURBOCHARGER	1	SN:30380718--
20	6733-81-6850	· · SPACER, MOUNTING	3	SN:30380718--
21	6735-81-6810	· · SPACER, MOUNTING	1	SN:30380718--
22	6735-82-8220	· · BEARING, TURBOCHARGER THRUST	1	SN:30380718--
23	6735-81-8620	· · COLLAR, THRUST	1	SN:30380718--
24	6742-01-5569	· · BOLT	1	SN:30380718--
25	6738-82-8820	· · IMPELLER, TURBOCHARGER	1	SN:30380718--
26	6733-81-8480	· · PIN	1	SN:30380718--
27	☆	· · HOUSING, ROLL	1	SN:30380718--
28	6736-81-8390	· · PLATE, CLAMPING	2	SN:30380718--
29	6735-81-8370	· · SCREW	2	SN:30380718--
30	☆	· · HOUSING, TURBINE	1	SN:30380718--
31	6735-81-8310	· · RING, RETAINING	1	SN:30380718--
32	6735-81-8490	· · BRACKET, ACTUATOR	1	SN:30380718--
33	6733-51-8110	· · GASKET, ADAPTER	1	SN:30380718--
34	6742-01-5564	· · CLAMP, HOSE	2	SN:30380718--
35	6733-81-8320	· · CONNECTION, ADAPTER	1	SN:30380718--
36	☆	· · HOSE, PLAIN	1	SN:30380718--
37	☆	· · HOUSING, COMPRESSOR	1	SN:30380718--

SAA6D102E-2 S/N 30380718-UP

TURBOCHARGER

Item	Part No.	Description	Qty	Options
38	6736-81-8440	・・ SEAL, SPLIT RING	1	SN:30380718--
39	6736-81-8320	・・ SEAL, SPLIT RING	1	SN:30380718--
40	6736-81-8380	・・ BOLT, (M8-1.25X12)	4	SN:30380718--
41	6736-81-8360	・・ RING, RETAINING	4	SN:30380718--
42	6743-82-8140	・・ RING, RETAINING	1	SN:30380718--
43	☆	・・ BUFFLE, TURBOCHARGER NOISE	1	SN:30380718--

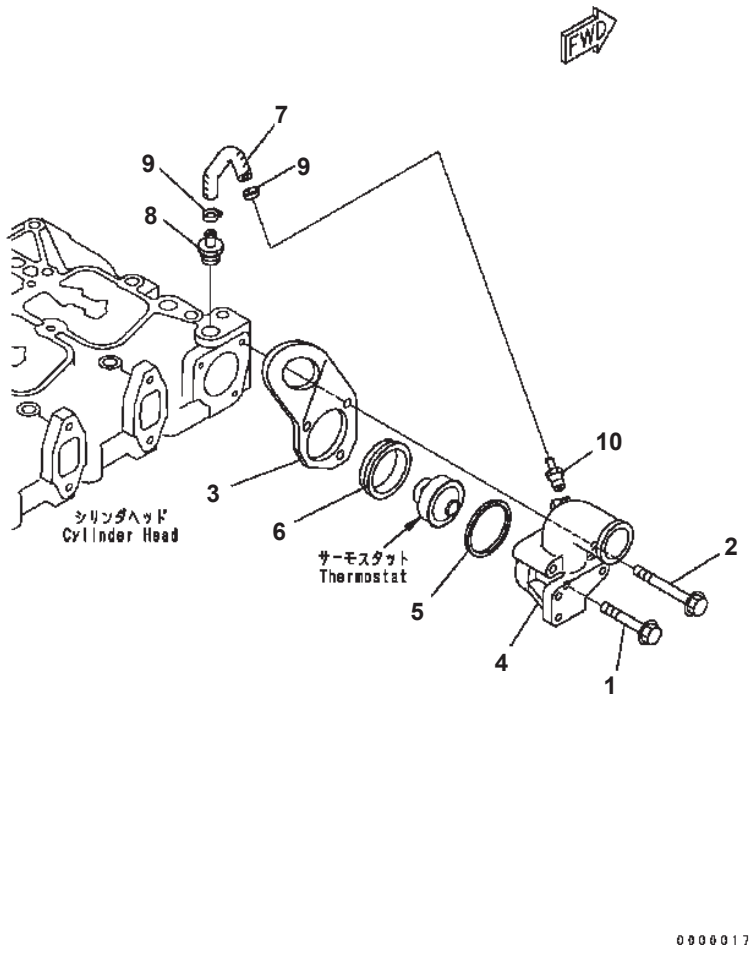

THERMOSTAT HOUSING

Item	Part No.	Description	Qty	Options
1	6732-61-6140	BOLT	1	SN:30380718--
2	6732-61-6180	BOLT	2	SN:30380718--
3	6735-11-1910	BRACKET	1	SN:30380718--
4	6732-61-6310	HOUSING {THERMOSTAT}	1	SN:30380718--
5	6732-61-6250	SEAL {RING} (K1)	1	SN:30380718--
6	6732-61-6240	GASKET (K1)	1	SN:30380718--
7	6732-61-6330	HOSE	1	SN:30380718--
8	6732-61-6270	VALVE {CHECK}	1	SN:30380718--
9	6732-61-6190	CLAMP	2	SN:30380718--
10	6732-61-6170	COUPLING	1	SN:30380718--

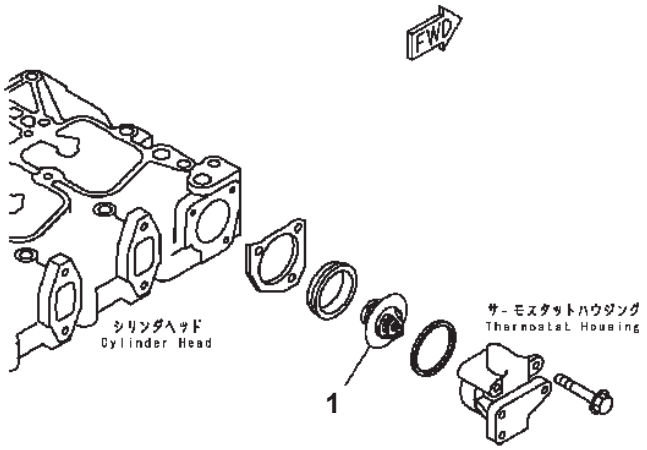

SAA6D102E-2 S/N 30380718-UP

THERMOSTAT

Item	Part No.	Description	Qty	Options
1	6735-61-6471	THERMOSTAT	1	SN:30380718--

Ref. A173R-01A0 Page 030150

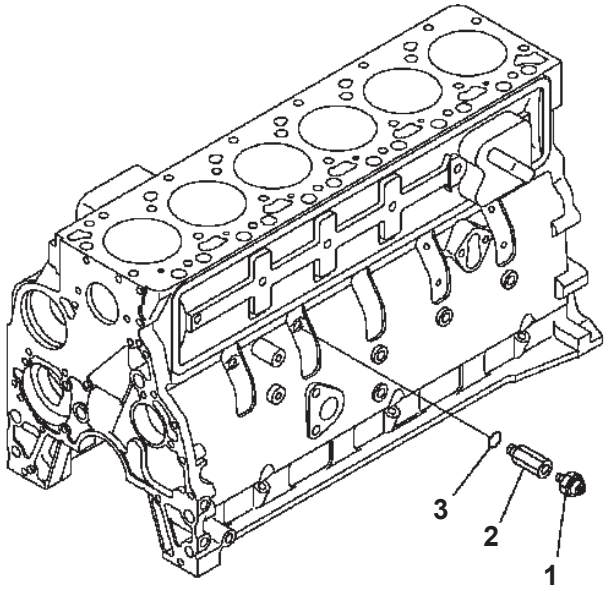

00000177

OIL PRESSURE SWITCH

Item	Part No.	Description	Qty	Options
1	08073-20505	SWITCH, OIL PRESSURE	1	SN:30380718--
2	6738-81-3170	ADAPTER	1	SN:30380718--
3	6215-81-9710	O-RING	1	SN:30380718--

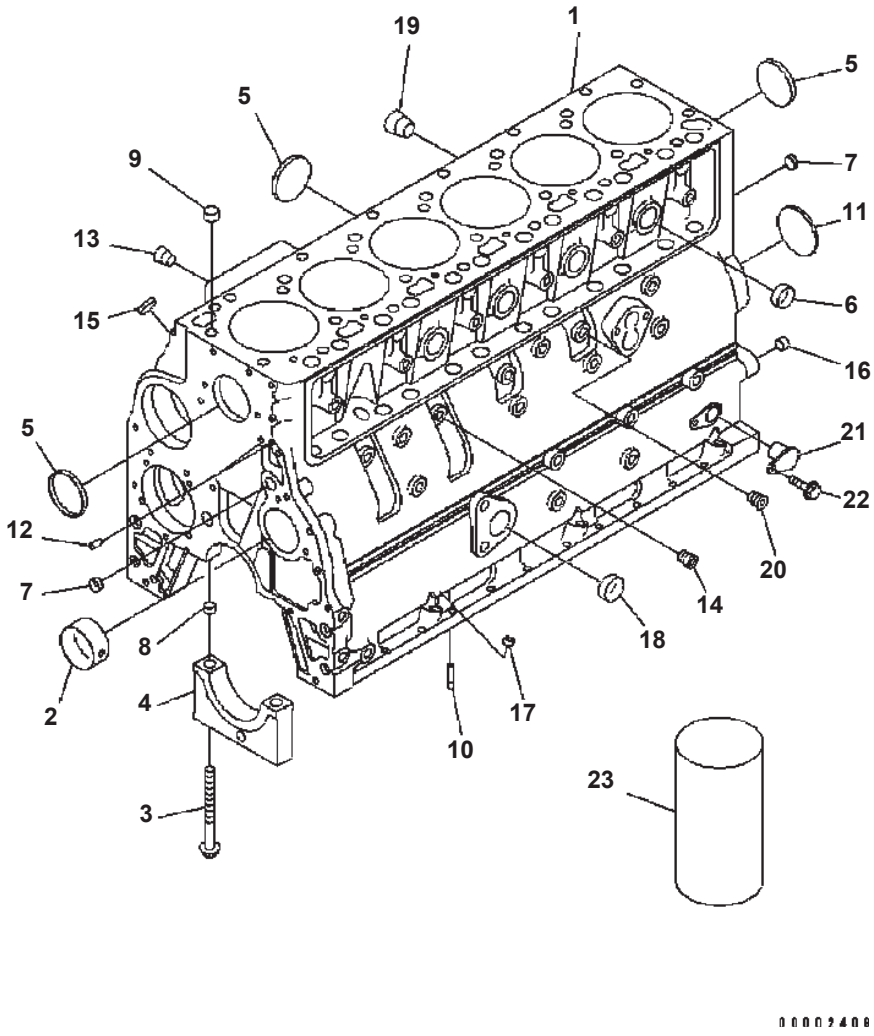

SAA6D102E-2 S/N 30380718-UP

CYLINDER BLOCK

Item	Part No.	Description	Qty	Options
	6731-21-1270	CYLINDER BLOCK ASS'Y	1	SN:30380718--
1	☆	· BLOCK, CYLINDER	1	SN:30380718--
2	6732-21-1411	· · BUSHING	1	SN:30380718--
3	6732-21-1611	· · BOLT	14	SN:30380718--
4	6731-21-1260	· · CAP	7	SN:30380718--
5	6736-21-1810	· · PLUG, EXPANSION	5	SN:30380718--
6	6736-21-1820	· · PLUG, EXPANSION	4	SN:30380718--
7	6732-21-1810	· · PLUG, EXPANSION	3	SN:30380718--
8	6732-21-1910	· · RING, DOWEL	14	SN:30380718--
	6731-21-1210	· BLOCK SERVICE KIT	1	SN:30380718--
9	6732-21-6140	· · RING, DOWEL	2	SN:30380718--
10	6731-21-1190	· · NOZZLE, PISTON COOLING	6	SN:30380718--
11	6732-21-6130	· · PLUG, EXPANSION	1	SN:30380718--
12	6732-21-6120	· · PIN, DOWEL	2	SN:30380718--
13	6732-11-1910	· · PLUG, PIPE	1	SN:30380718--
14	6732-21-1960	· · PLUG ASS'Y	3	SN:30380718--
15	6735-21-5530	· · PLUG, EXPANSION	1	SN:30380718--
16	6732-21-1910	· · RING, DOWEL	2	SN:30380718--
17	6732-21-5530	· · PLUG, EXPANSION	3	SN:30380718--
18	6732-21-6160	· · PLUG, EXPANSION	1	SN:30380718--
19	6732-11-1920	· · PLUG, PIPE	1	SN:30380718--
20	6735-21-1910	· · PLUG ASS'Y, THREADED	1	SN:30380718--
21	6735-21-1940	· · PLUG, O-RING	1	SN:30380718--
22	6732-21-3120	· · BOLT	1	SN:30380718--
	6732-21-1930	· · O-RING	1	SN:30380718--
		SERVICE PARTS		
2	6736-29-1410	BUSHING, OVERSIZE BORE	AR	SN:30380718--
	6736-29-1420	BUSHING, OVERSIZE BORE	AR	SN:30380718--
4	6732-21-1260	CAP, BEARING	7	SN:30380718--
23	6736-29-2110	SLEEVE, SALVAGE	AR	SN:30380718--

Ref. A2019-01A2 Page 030170

@@D1582@

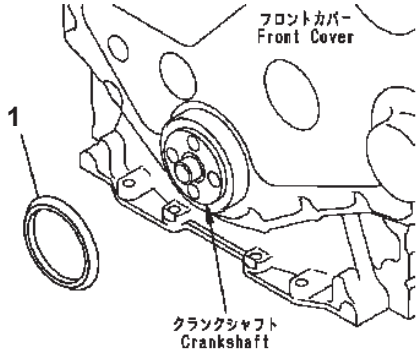

PFD1582

DUST SEAL

Item	Part No.	Description	Qty	Options
1	6731-81-8710	COVER	1	SN:30380718--

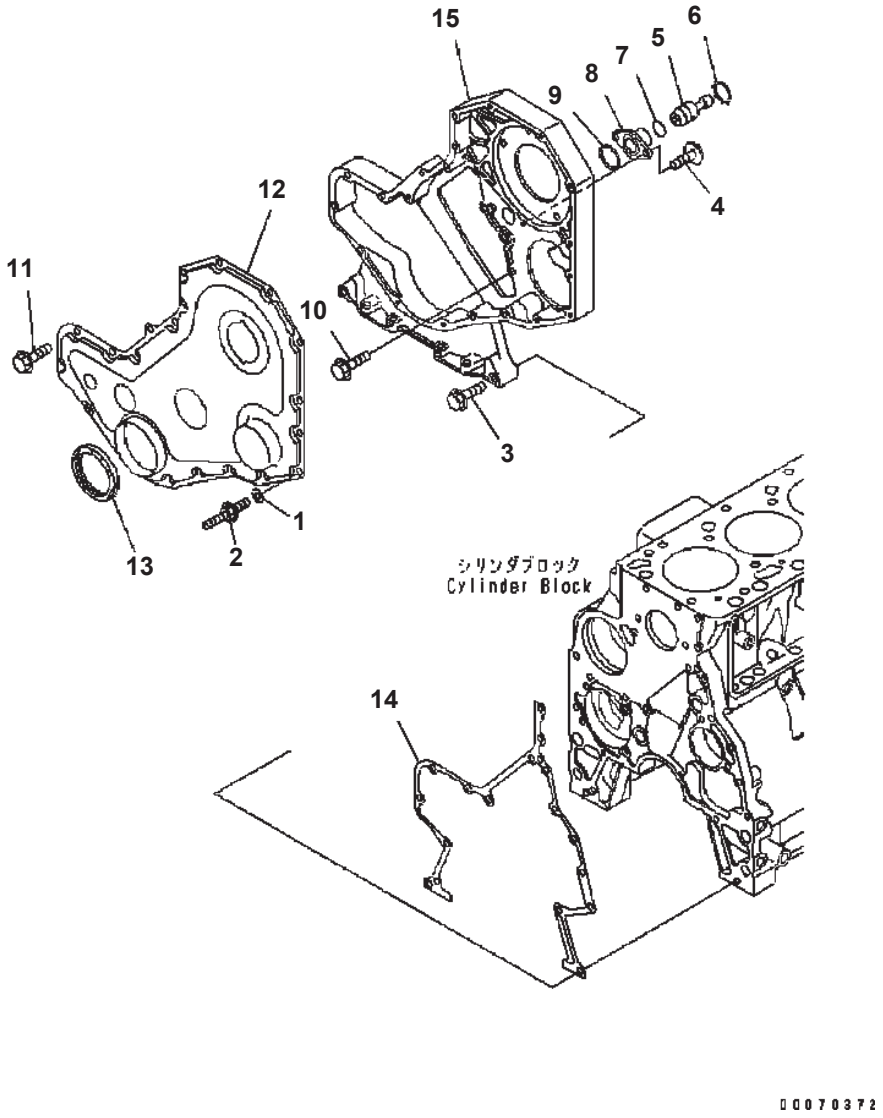

FRONT COVER

Item	Part No.	Description	Qty	Options
1	01643-30823	WASHER, PLAIN	1	SN:30380718--
2	6732-21-3990	STUD	1	SN:30380718--
3	6738-22-3110	BOLT	11	SN:30386545--
	6736-21-3210	BOLT	11	SN:30380718--30386544
4	6732-21-3160	BOLT	2	SN:30380718--
5	6732-21-3140	PIN, TIMING	1	SN:30380718--
6	6732-21-3150	RING, RETAINING	1	SN:30380718--
7	6732-21-3870	O-RING	1	SN:30380718--
8	6732-21-3180	HOUSING, TIMING PIN	1	SN:30380718--
9	6732-21-3880	GASKET	1	SN:30380718--
10	6736-21-5310	BOLT	10	SN:30380718--
11	6742-01-0540	BOLT	5	SN:30380718--
	6735-21-3140	GEAR COVER ASS'Y	1	SN:30380718--
12	6736-21-3310	· COVER, GEAR	1	SN:30380718--
13	6732-21-3511	· SEAL, OIL	1	SN:30380718--
14	6732-21-3812	GASKET, GEAR HOUSING	1	SN:30380718--
15	6738-21-3110	HOUSING, GEAR	1	SN:30380718--

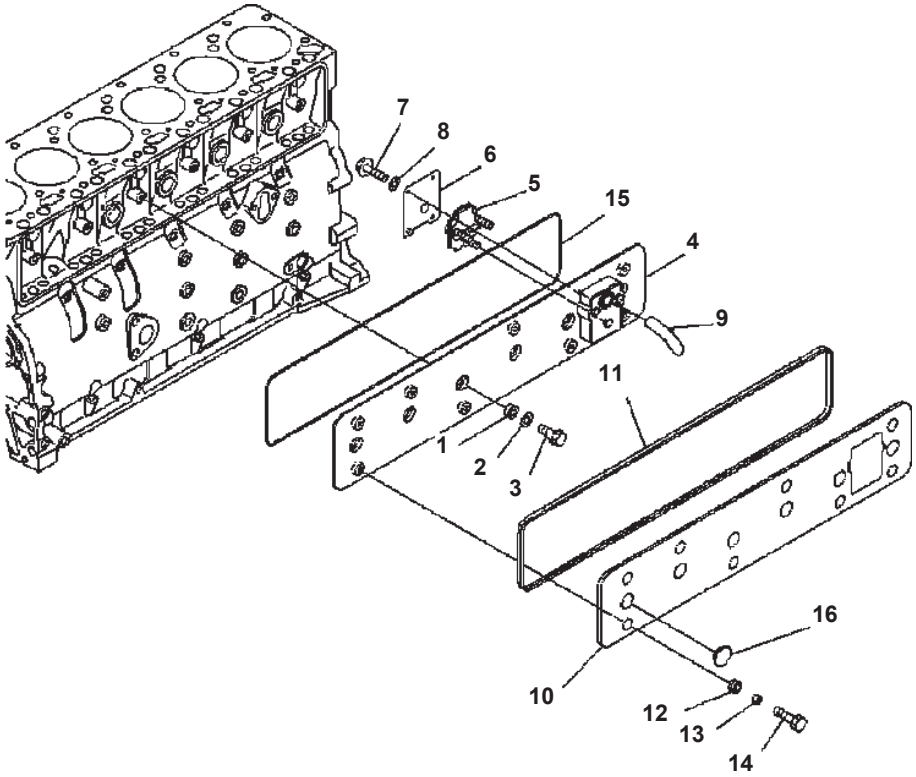

SAA6D102E-2 S/N 30380718-UP

CAMFOLLOWER COVER

Item	Part No.	Description	Qty	Options
1	6732-11-8210	GASKET {SEAL} (K2)	6	SN:30380718--
2	6732-11-8150	WASHER, PLAIN	6	SN:30380718--
3	6738-21-6280	BOLT	6	SN:30380718--
	6738-21-6100	COVER ASS'Y	1	SN:30380718--
4	☆	· COVER	1	SN:30380718--
5	6738-21-7710	· BREATHER	1	SN:30380718--
6	6738-21-7780	· COVER, BREATHER	1	SN:30380718--
7	01435-00616	· BOLT	4	SN:30380718--
8	01640-20610	· WASHER, GROUND	4	SN:30380718--
9	6738-21-7810	· TUBE	1	SN:30380718--
10	6738-21-6620	PANEL	1	SN:30380718--
11	6738-21-6650	GASKET (K2)	1	SN:30380718--
12	6738-21-6660	GASKET (K2)	8	SN:30380718--
13	6738-21-6670	SPACER	8	SN:30380718--
14	6732-71-3220	BOLT	8	SN:30380718--
15	6738-21-6180	O-RING (K2)	1	SN:30380718--
16	6738-21-6680	GROMMET	6	SN:30380718--

Ref. A206P-01A7 Page 030200

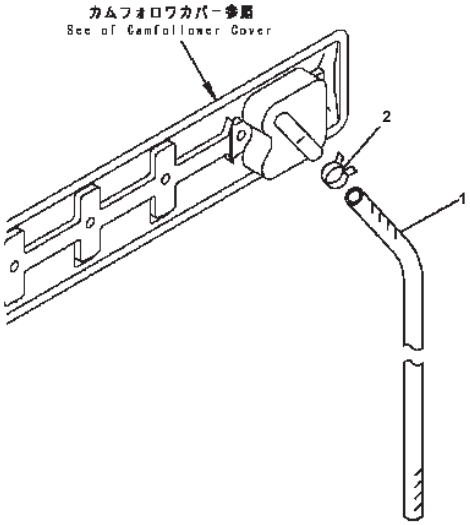

PF01702

BREATHER HOSE

Item	Part No.	Description	Qty	Options
1	6738-22-7810	HOSE	1	SN:30380718--
2	6735-21-6130	CLIP	1	SN:30380718--

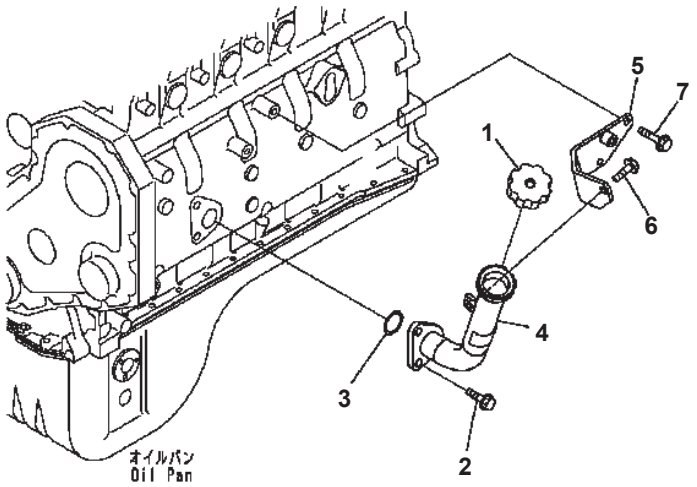

00000179

SAA6D102E-2 S/N 30380718-UP

CYLINDER BLOCK COVER (OIL FILLER AND BRACKET)

Item	Part No.	Description	Qty	Options
1	6136-21-7120	CAP ASS'Y	1	SN:30380718--
2	6732-51-5130	BOLT	2	SN:30380718--
3	6736-21-3360	SEAL (K2)	1	SN:30380718--
4	6738-21-5130	TUBE, OIL FILLER	1	SN:30380718--
5	6738-21-5120	BRACKET	1	SN:30380718--
6	01435-01020	BOLT	1	SN:30380718--
7	6736-21-5310	BOLT	2	SN:30380718--

Ref. A207S-01A0 Page 030220

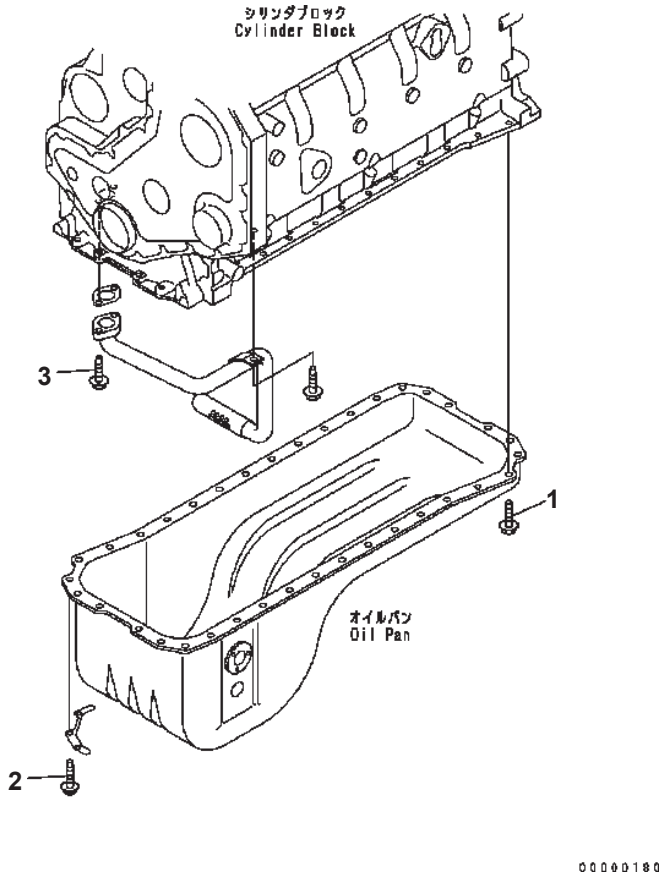

SAA6D102E-2 S/N 30380718-UP

OIL PAN BOLT

Item	Part No.	Description	Qty	Options
1	6732-21-6610	BOLT	33	SN:30380718--
2	6732-21-5160	BOLT	3	SN:30380718--
3	6732-21-6630	BOLT	2	SN:30380718--

Ref. A211R-01A2 Page 030230

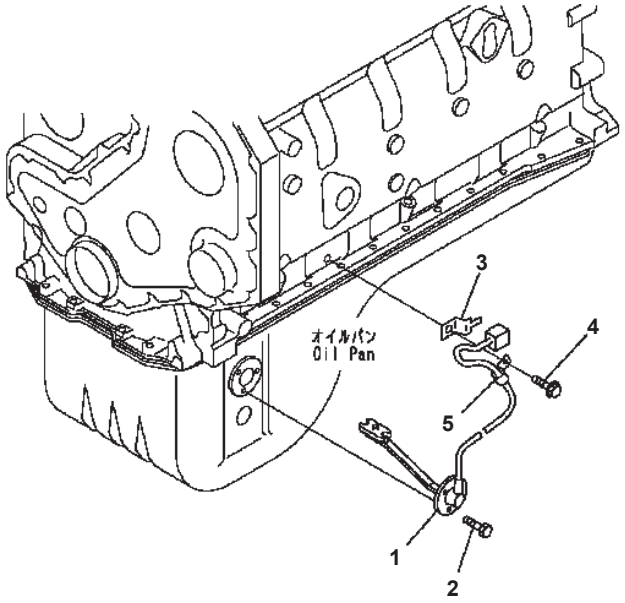

FLUID LEVEL SENSOR

Item	Part No.	Description	Qty	Options
1	6741-81-9220	SENSOR	1	SN:30380718--
2	6733-71-5680	BOLT	3	SN:30380718--
3	08193-20010	BRACKET	1	SN:30380718--
4	6732-21-3120	BOLT	1	SN:30380718--
5	6738-82-5810	CLIP	1	SN:30380718--

00070373

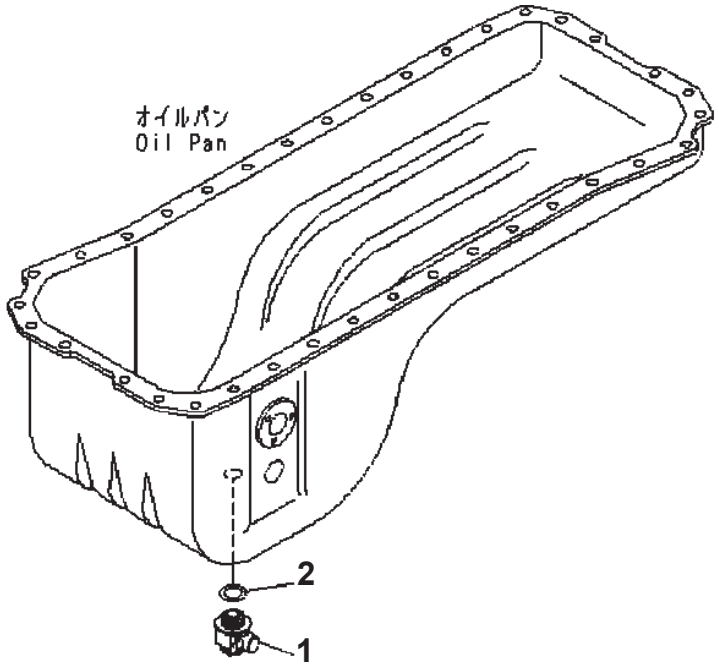

00070373

SAA6D102E-2 S/N 30380718-UP

REMOTE ENGINE OIL DRAIN

Item	Part No.	Description	Qty	Options
1	6738-21-5610	VALVE, DRAIN	1	SN:30380718--
2	07005-02216	GASKET, SEAL	1	SN:30380718--

Ref. A2119-01B5 Page 030250

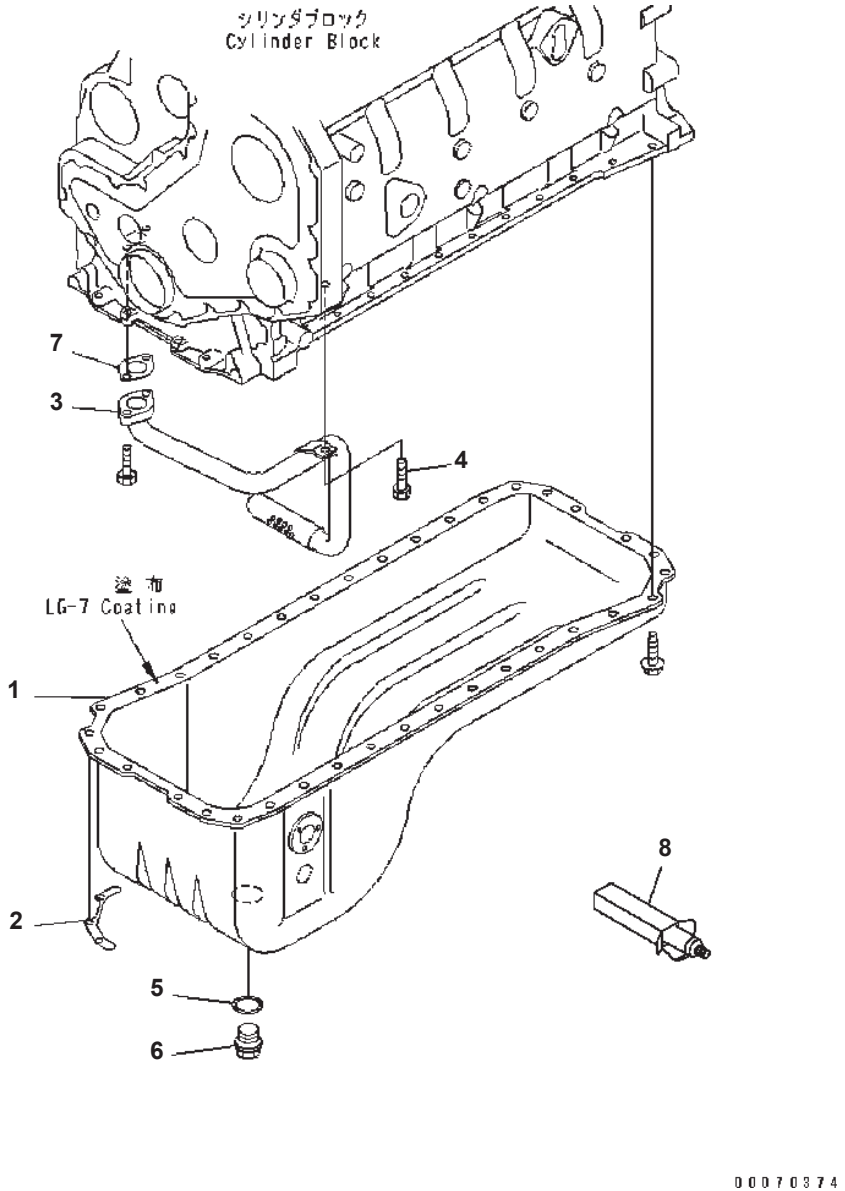

OIL PAN AND SUCTION TUBE

Item	Part No.	Description	Qty	Options
1	6735-21-5140	PAN, OIL	1	SN:30380718--
2	6732-21-5270	PLATE, CLAMP	1	SN:30380718--
3	6735-21-5531	TUBE, OIL SUCTION	1	SN:30380718--
4	6732-71-3220	BOLT	1	SN:30380718--
5	6732-21-5170	GASKET, SEAL	1	SN:30380718--
6	6736-21-5320	PLUG	1	SN:30380718--
7	6733-21-5521	GASKET, FLANGE	1	SN:30380718--
8	09920-00150	LIQUID GASKET, LG-7¤ 150G	1	SN:30380718--

00000182

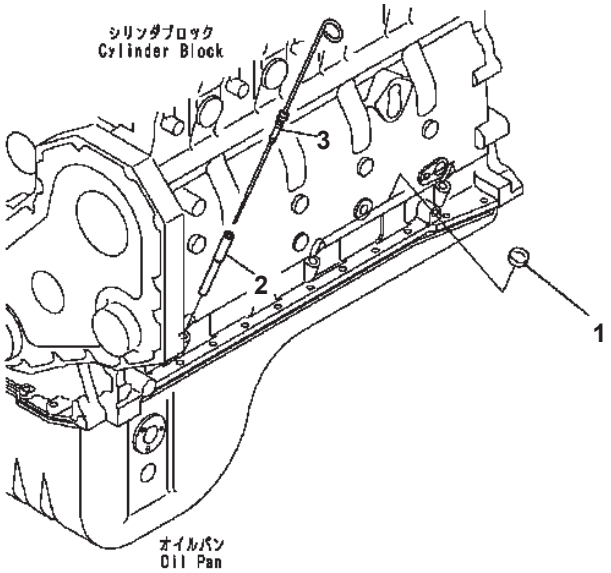

00000182

SAA6D102E-2 S/N 30380718-UP

OIL LEVEL GAUGE

Item	Part No.	Description	Qty	Options
1	6732-21-5530	PLUG	2	SN:30380718--
2	6732-21-5480	GUIDE	1	SN:30380718--
3	6735-21-5170	GAUGE	1	SN:30380718--

Ref. A219P-01A6 Page 030270

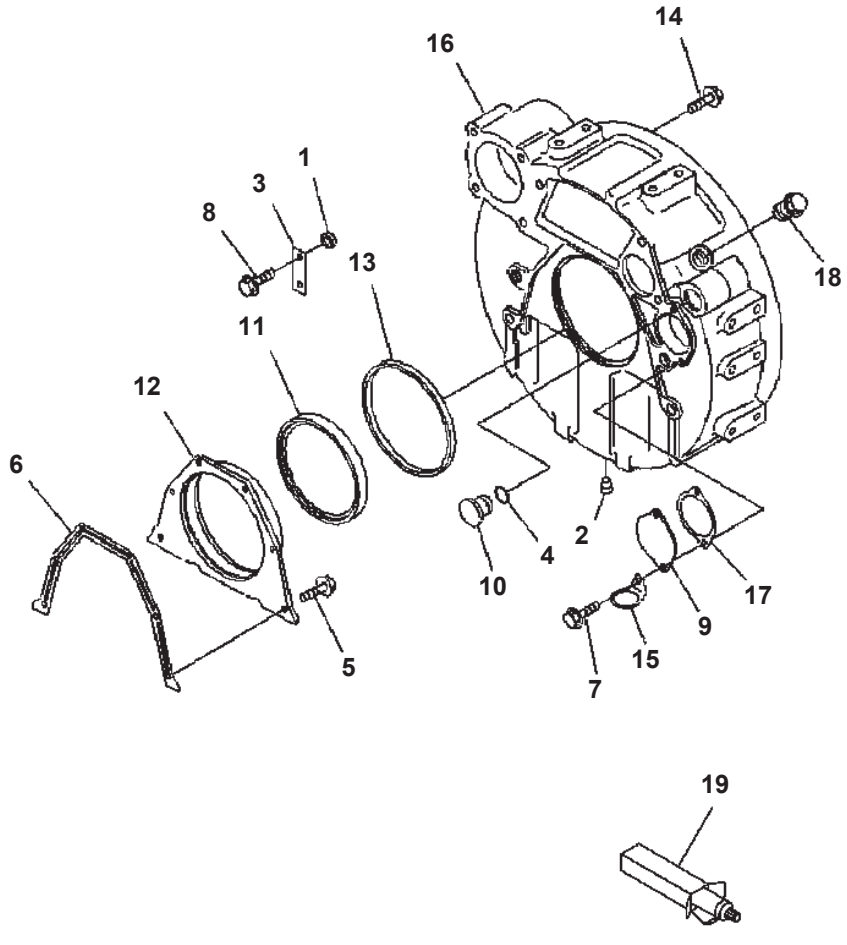

FLYWHEEL HOUSING

Item	Part No.	Description	Qty	Options
1	6738-22-4710	SPACER, MOUNTING	1	SN:30380718--
2	6732-11-1920	PLUG, PIPE	1	SN:30380718--
3	6738-22-5110	PLATE	1	SN:30380718--
4	6732-21-4161	O-RING, SEAL	1	SN:30380718--
5	6732-21-4290	BOLT	6	SN:30380718--
6	6735-21-4191	GASKET, COVER PLATE	1	SN:30380718--
7	6732-21-4120	BOLT	1	SN:30380718--
8	6732-21-5160	BOLT	1	SN:30380718--
9	6732-21-4130	PLATE, COVER	1	SN:30380718--
10	6732-21-4150	PLUG, O-RING	1	SN:30380718--
	6735-K2-3001	SEAL	1	SN:30380718--
11	☆	・ SEAL	1	SN:30380718--
12	6731-21-6231	COVER, REAR	1	SN:30380718--
13	6732-22-4170	GASKET, SEAL	1	SN:30380718--
14	6732-21-4220	BOLT	8	SN:30380718--
15	6735-21-4250	CLIP	1	SN:30380718--
16	6732-22-4210	HOUSING, FLYWHEEL	1	SN:30380718--
17	6742-01-5158	GASKET, COVER PLATE	1	SN:30380718--
18	6735-61-2140	PLUG	1	SN:30380718--
19	(09920-00150)	LIQUID GASKET {LG-7¤ 150G}	AR	SN:30380718--

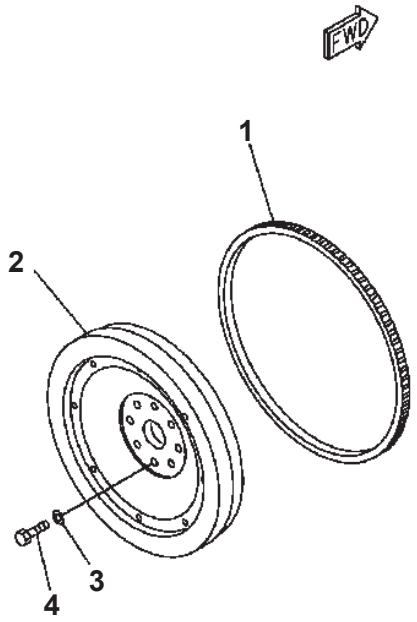

PJ6C388

SAA6D102E-2 S/N 30380718-UP

FLYWHEEL

Item	Part No.	Description	Qty	Options
	6738-31-4400	FLYWHEEL ASS'Y	1	SN:30380718--
1	6732-31-4180	· GEAR {RING}	1	SN:30380718--
2	☆	· FLYWHEEL	1	SN:30380718--
3	6732-31-4120	WASHER	8	SN:30380718--
4	6732-31-4130	BOLT	8	SN:30380718--

Ref. A223P-01C2 Page 030290

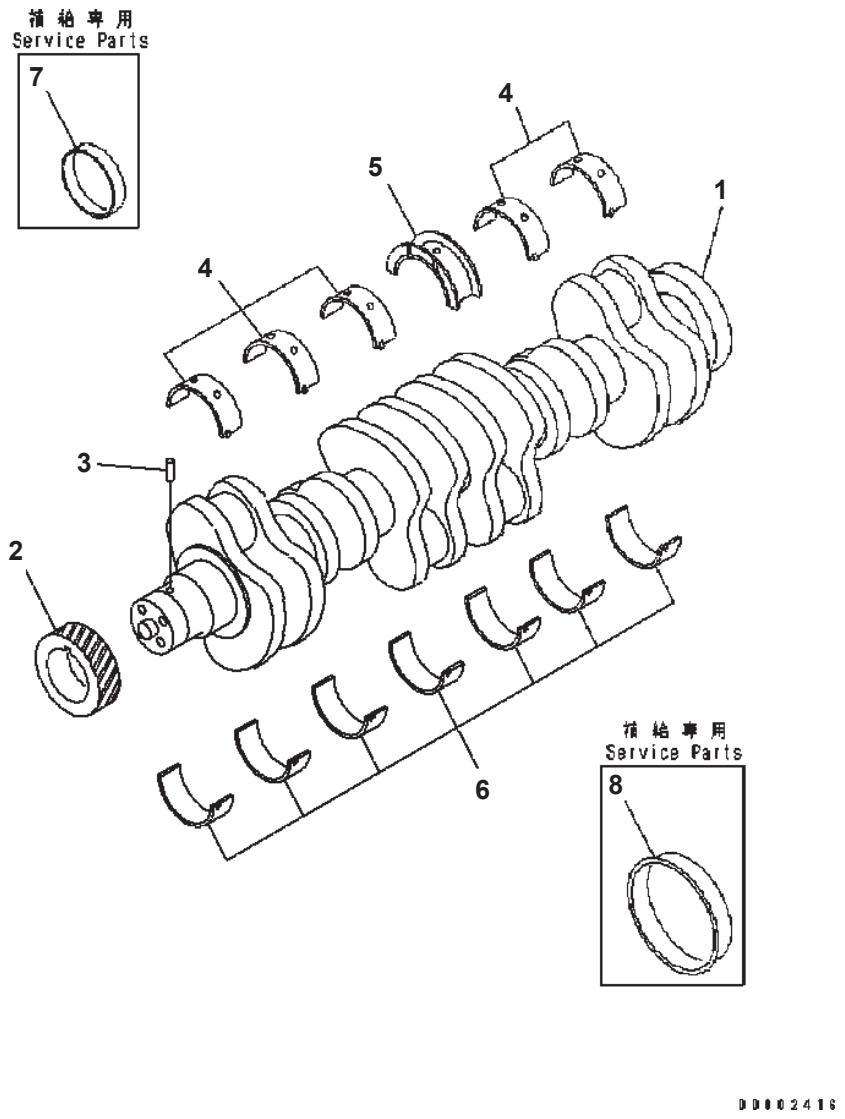

SAA6D102E-2 S/N 30380718-UP

CRANKSHAFT

Item	Part No.	Description	Qty	Options
	6736-31-1100	CRANKSHAFT ASS'Y	1	SN:30380718--
1	☆	· CRANKSHAFT	1	SN:30380718--
2	6732-31-1211	· GEAR	1	SN:30380718--
3	6732-21-6150	· PIN	1	SN:30380718--
		STANDARD		
	6754-22-8110	MAIN METAL ASS'Y	1	SN:30382362--
	6735-21-8100	MAIN METAL ASS'Y	1	SN:30380718--30382361
4	6735-21-8110	· METAL	6	SN:30380718--
5	6732-21-8180	· METAL	1	SN:30382362--
	6742-01-4060	· METAL	1	SN:30380718--30382361
6	6735-21-8210	· METAL	7	SN:30380718--
		OVERSIZE 0.25MM		
	6736-29-8100	MAIN METAL ASS'Y	AR	SN:30380718--
4	6735-29-8110	· METAL	6	SN:30380718--
5	☆	· METAL	1	SN:30380718--
6	☆	· METAL	7	SN:30380718--
		OVERSIZE 0.50MM		
	6736-28-8100	MAIN METAL ASS'Y	AR	SN:30380718--
4	6735-28-8110	· METAL	6	SN:30380718--
5	☆	· METAL	1	SN:30380718--
6	☆	· METAL	7	SN:30380718--
		OVERSIZE 0.75MM		
	6736-27-8100	MAIN METAL ASS'Y	AR	SN:30380718--
4	6735-27-8110	· METAL	6	SN:30380718--
5	☆	· METAL	1	SN:30380718--
6	☆	· METAL	7	SN:30380718--
		OVERSIZE 1.00MM		
	6736-26-8100	MAIN METAL ASS'Y	AR	SN:30380718--
4	6735-26-8110	· METAL	6	SN:30380718--
5	☆	· METAL	1	SN:30380718--
6	☆	· METAL	7	SN:30380718--
		OVERSIZE 0.50MM		
	6735-28-8200	THRUST METAL ASS'Y	AR	SN:30382362--
	6731-21-8610	THRUST METAL ASS'Y	AR	SN:30380718--30382361
5	☆	· METAL	1	SN:30382362--
	☆	· METAL	1	SN:30380718--30382361
6	☆	· METAL	1	SN:30380718--
		OVERSIZE 1.00MM		
	6736-27-8620	THRUST METAL ASS'Y	AR	SN:30382362--
	6731-21-8620	THRUST METAL ASS'Y	AR	SN:30380718--30382361

Ref. A2319-01A0 Page 030300

SAA6D102E-2 S/N 30380718-UP

CRANKSHAFT

Item	Part No.	Description	Qty	Options
5	☆	· METAL	1	SN:30382362--
	☆	· METAL	1	SN:30380718--30382361
6	☆	· METAL	1	SN:30380718--
		SERVICE PARTS		
7	6736-39-1221	SLEEVE	AR	SN:30380718--
8	6736-39-1140	SLEEVE	AR	SN:30380718--

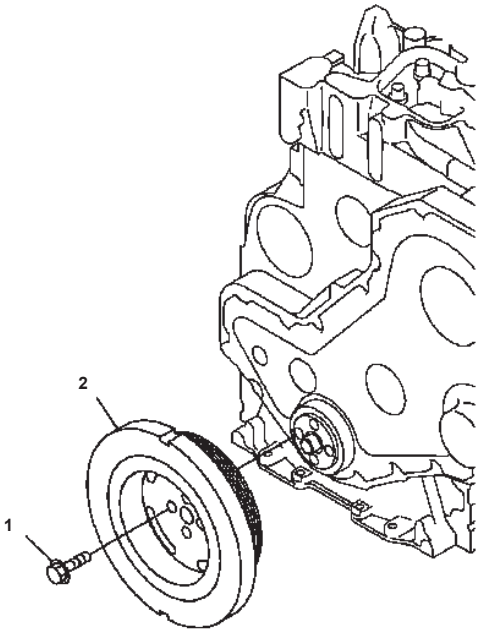

PWD1072

DAMPER

Item	Part No.	Description	Qty	Options
1	6732-31-8120	BOLT	4	SN:30380718--
2	6735-31-8120	DAMPER	1	SN:30380718--

@@D0835@

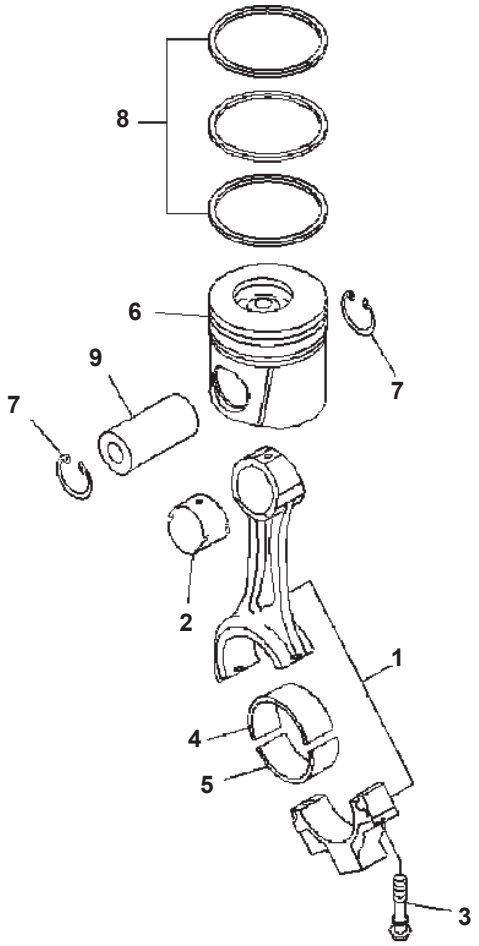

PMD0835

SAA6D102E-2 S/N 30380718-UP

PISTON

Item	Part No.	Description	Qty	Options
1	6737-32-3110	ROD, ENGINE CONNECTING	6	SN:30380718--
2	6732-31-3132	BUSHING	1	SN:30380718--
3	6732-31-3320	SCREW, CONNECTING ROD	2	SN:30380718--
4	6754-32-3410	BEARING UPPER	6	SN:36008947--
	6732-31-3411	BEARING UPPER	6	SN:30380718--36008946
5	6732-31-3420	BEARING LOWER	6	SN:30380718--
	6738-32-2010	KIT, ENGINE PISTON	6	SN:30380718--
6	☆	· PISTON	1	SN:30380718--
7	6732-31-2420	· RING, RETAINING	2	SN:30380718--
8	6738-31-2030	· RING, SET	1	SN:30380718--
9	6731-31-2410	PIN	6	SN:30380718--
		SERVICE PARTS		
4	6754-32-3420	METAL¤ 0.25MM	AR	SN:36008947--
	6736-39-3400	METAL¤ 0.25MM	AR	SN:30380718--36008946
	6754-32-3430	METAL¤ 0.50MM	AR	SN:36008947--
	6736-38-3400	METAL¤ 0.50MM	AR	SN:30380718--36008946
	6754-32-3440	METAL¤ 0.75MM	AR	SN:36008947--
	6736-37-3400	METAL¤ 0.75MM	AR	SN:30380718--36008946
	6754-32-3450	METAL¤ 1.00MM	AR	SN:36008947--
	6736-36-3400	METAL¤ 1.00MM	AR	SN:30380718--36008946
5	6738-39-3400	METAL¤ 0.25MM	AR	SN:30380718--
	6738-38-3400	METAL¤ 0.50MM	AR	SN:30380718--
	6738-37-3400	METAL¤ 0.75MM	AR	SN:30380718--
	6738-36-3400	METAL¤ 1.00MM	AR	SN:30380718--
	6738-32-2020	KIT, OVERSIZE 0.50MM	AR	SN:30380718--
6	☆	· PISTON, ENGINE	1	SN:30380718--
7	6732-31-2420	· RING, RETAINING	2	SN:30380718--
8	6738-39-2030	· PISTON RING ASS'Y	1	SN:30380718--
	6738-32-2030	KIT, OVERSIZE 1.00MM	AR	SN:30380718--
6	☆	· PISTON, ENGINE	1	SN:30380718--
7	6732-31-2420	· RING, RETAINING	2	SN:30380718--
8	6738-38-2030	· PISTON RING ASS'Y	1	SN:30380718--

Ref. A2359-01A2 Page 030320

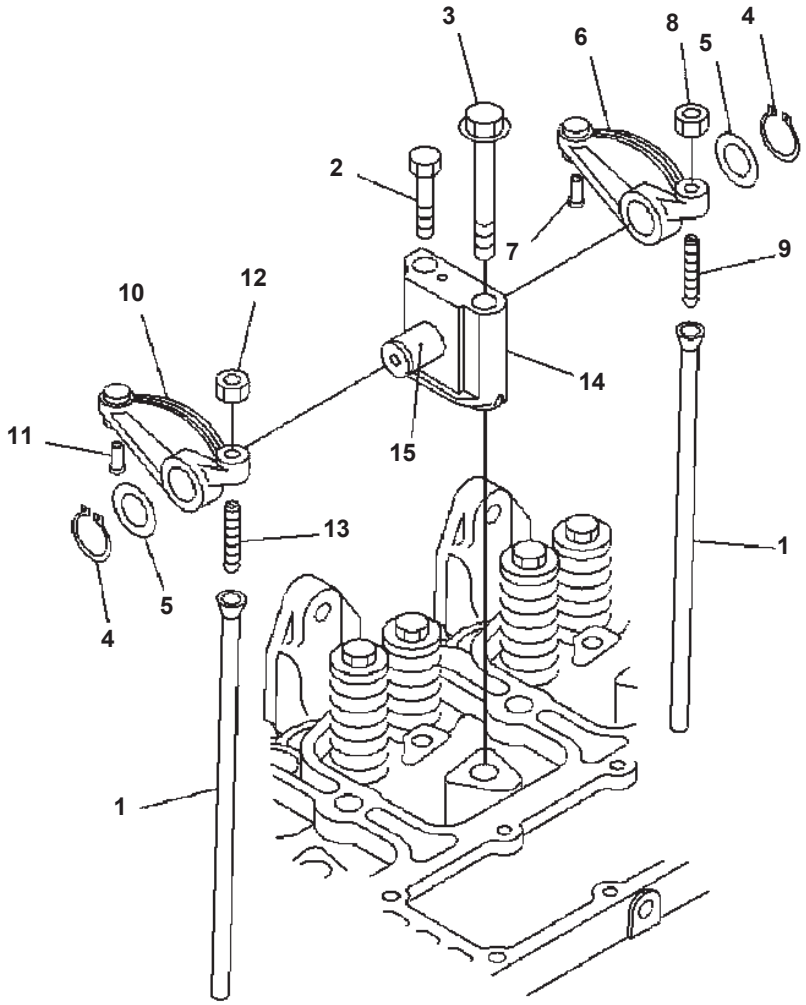

ROCKER ARM

Item	Part No.	Description	Qty	Options
1	6732-41-3111	ROD, PUSH	12	SN:30380718--
2	6732-41-5180	BOLT	6	SN:30380718--
3	6732-11-1640	BOLT	6	SN:30380718--
4	6732-41-5170	RING, RETAINING	12	SN:30380718--
5	6732-41-5160	WASHER, PLAIN	12	SN:30380718--
	6732-41-5400	ARM ASS'Y	6	SN:30380718--
6	☆	· ARM	1	SN:30380718--
7	☆	· INSERT, ROCKER LEVER	1	SN:30380718--
8	6735-41-5550	· NUT, HEXAGON	1	SN:30380718--
9	6735-41-5560	· SCREW, SLOTTED	1	SN:30380718--
	6732-41-5200	ARM ASS'Y	6	SN:30380718--
10	☆	· ARM	1	SN:30380718--
11	☆	· INSERT, ROCKER LEVER	1	SN:30380718--
12	6735-41-5550	· NUT, HEXAGON	1	SN:30380718--
13	6735-41-5560	· SCREW, SLOTTED	1	SN:30380718--
	6736-41-5110	BRACKET ASS'Y	6	SN:30380718--
14	6732-41-5120	· BRACKET	1	SN:30380718--
15	☆	· SHAFT ASS'Y	1	SN:30380718--

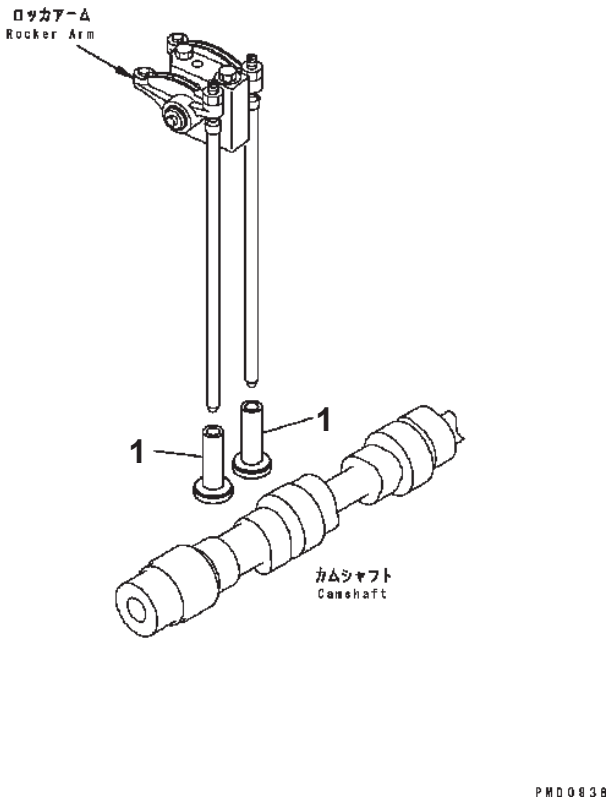

TAPPET

Item	Part No.	Description	Qty	Options
1	6732-41-2112	TAPPET	12	SN:30380718--

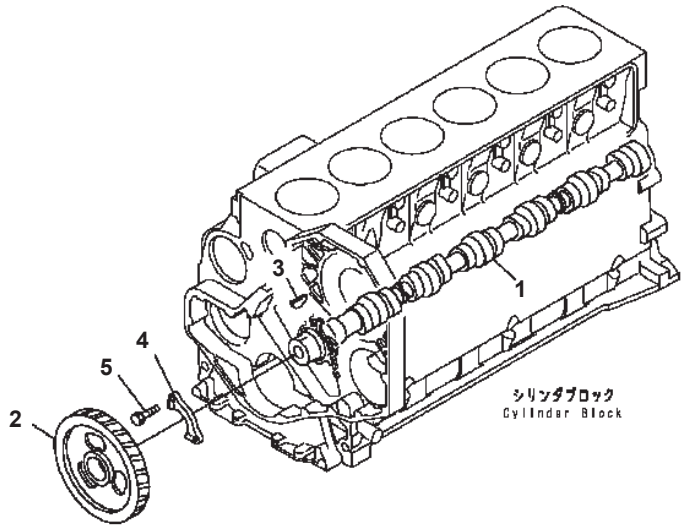

SAA6D102E-2 S/N 30380718-UP

CAMSHAFT

Item	Part No.	Description	Qty	Options
1	6735-41-1111	CAMSHAFT	1	SN:30380718--
2	6732-41-1231	GEAR	1	SN:30380718--
3	6732-41-1280	KEY	1	SN:30380718--
4	6732-41-1220	SUPPORT, THRUST	1	SN:30380718--
5	6732-41-1260	BOLT	2	SN:30380718--

Ref. A2419-01A0 Page 030350

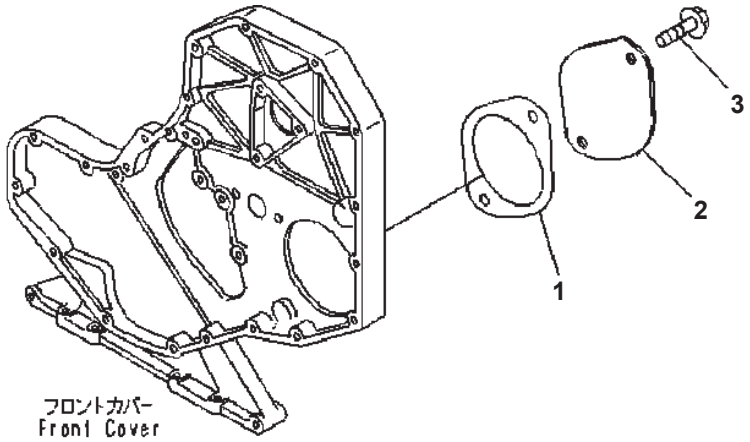

PFP0316

FRONT GEAR TRAIN COVER

Item	Part No.	Description	Qty	Options
1	6732-21-3380	GASKET	1	SN:30380718--
2	6732-21-9310	COVER	1	SN:30380718--
3	6732-51-5130	BOLT	2	SN:30380718--

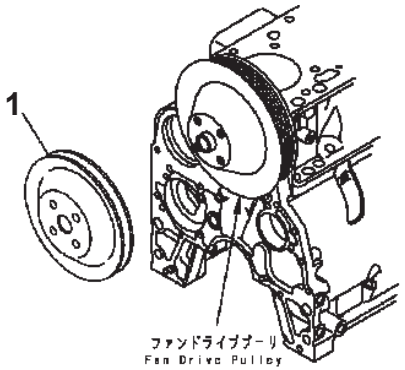

PJ6B398

FAN PULLEY

Item	Part No.	Description	Qty	Options
1	6731-91-1550	PULLEY	1	SN:30380718--

@@D1077@

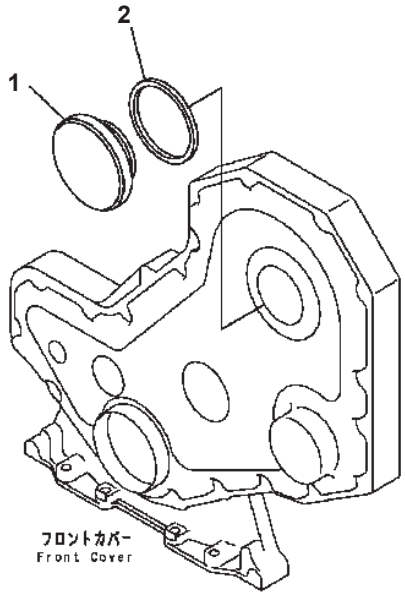

PMD1077

SAA6D102E-2 S/N 30380718-UP

TACHOMETER DRIVE COVER

Item	Part No.	Description	Qty	Options
1	6732-21-3190	COVER	1	SN:30380718--
2	6732-21-3220	SEAL (K2)	1	SN:30380718--

Ref. A281P-01A0 Page 030380

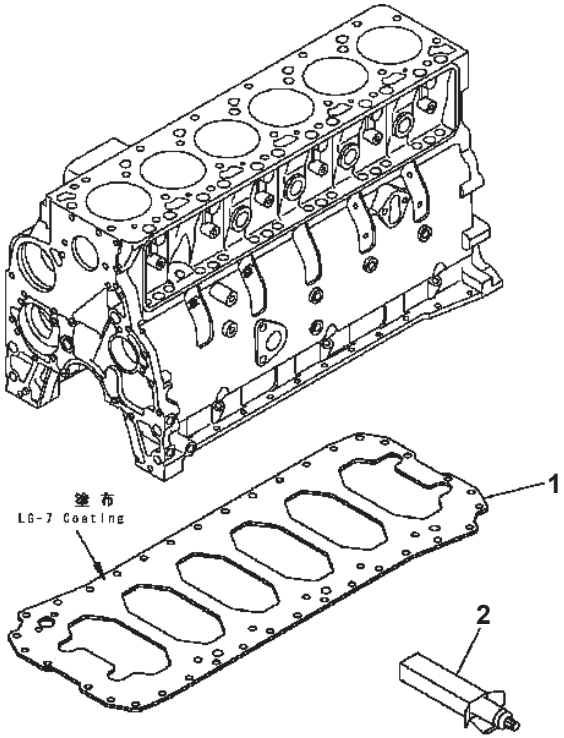

UNDER PLATE

Item	Part No.	Description	Qty	Options
1	6735-21-5151	PLATE	1	SN:30380718--
2	(09920-00150)	LIQUID GASKET {LG-7¤ 150G}	AR	SN:30380718--

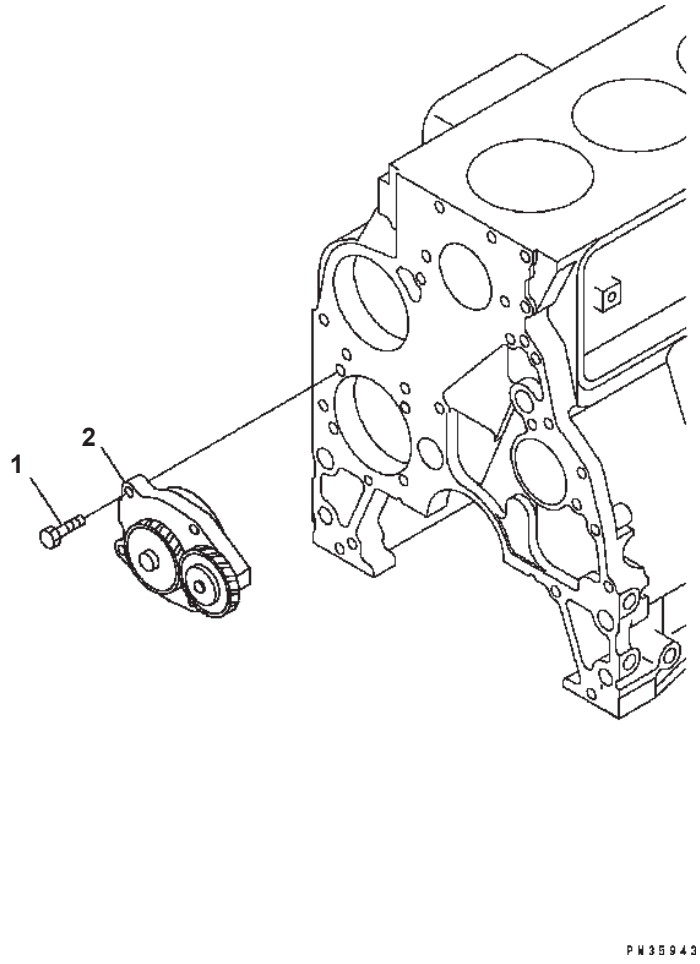

SAA6D102E-2 S/N 30380718-UP

OIL PUMP

Item	Part No.	Description	Qty	Options
1	6735-51-1120	BOLT	4	SN:30380718--
2	6738-51-1100	OIL PUMP ASS'Y	1	SN:30380718--

Ref. A301P-01A2 Page 030400

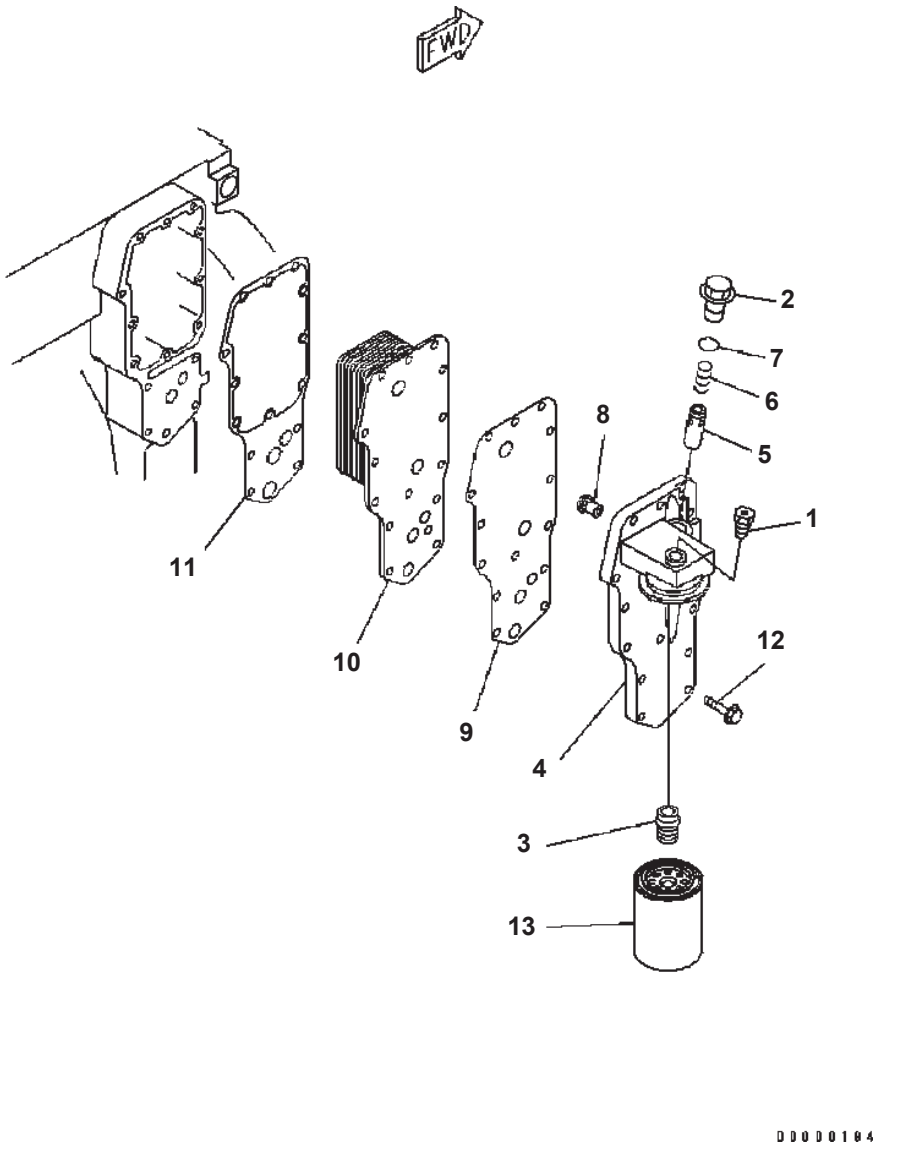

SAA6D102E-2 S/N 30380718-UP

OIL COOLER AND OIL FILTER

Item	Part No.	Description	Qty	Options
1	6732-11-1930	PLUG, PIPE	1	SN:30380718--
2	6735-61-2140	PLUG, THREADED	1	SN:30380718--
	6738-51-5110	HEAD ASS'Y	1	SN:30380718--
3	6736-61-5180	· ADAPTER, FILTER HEAD	1	SN:30380718--
4	6738-51-5120	· HEAD, FILTER	1	SN:30380718--
5	6735-61-2160	PLUNGER, PRESSURE REGULATOR	1	SN:30380718--
6	6735-61-2190	SPRING, COMPRESSION	1	SN:30380718--
7	6732-51-4420	O-RING	1	SN:30380718--
8	6731-61-2151	VALVE, PRESSURE RELIEF	1	SN:30380718--
9	6732-51-4432	GASKET, FILTER HEAD	1	SN:30380718--
10	6735-61-2110	CORE, COOLER	1	SN:30380718--
11	6732-61-2312	GASKET, OIL COOLER CORE	1	SN:30380718--
12	6732-61-6140	BOLT	14	SN:30380718--
13	6736-51-5142	CARTRIDGE, LUBRICATION OIL	1	SN:30380718--

Ref. A331P-01B2 Page 030410

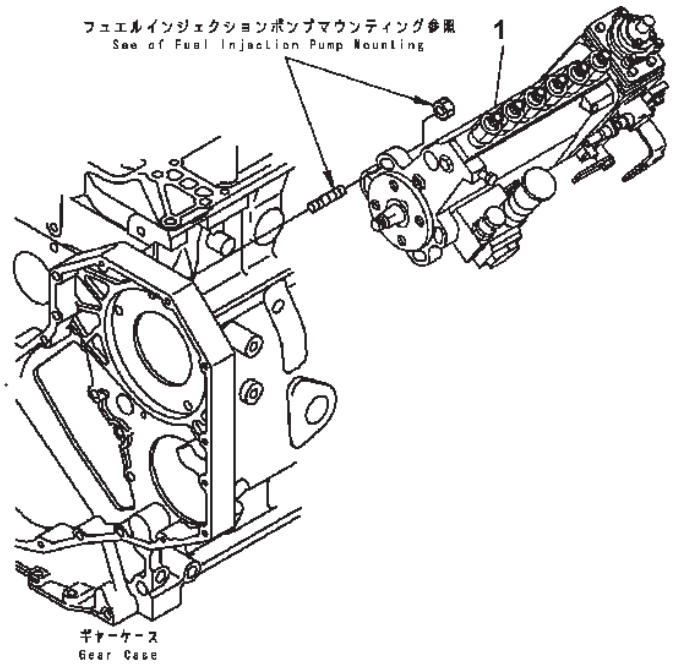

SAA6D102E-2 S/N 30380718-UP

FUEL INJECTION PUMP

Item	Part No.	Description	Qty	Options
1	(6738-71-1150)	INJECTION PUMP ASS'Y (SEE FIG.A401P-02H6)	1	SN:30380718--

Ref. A401P-01H6 Page 030420

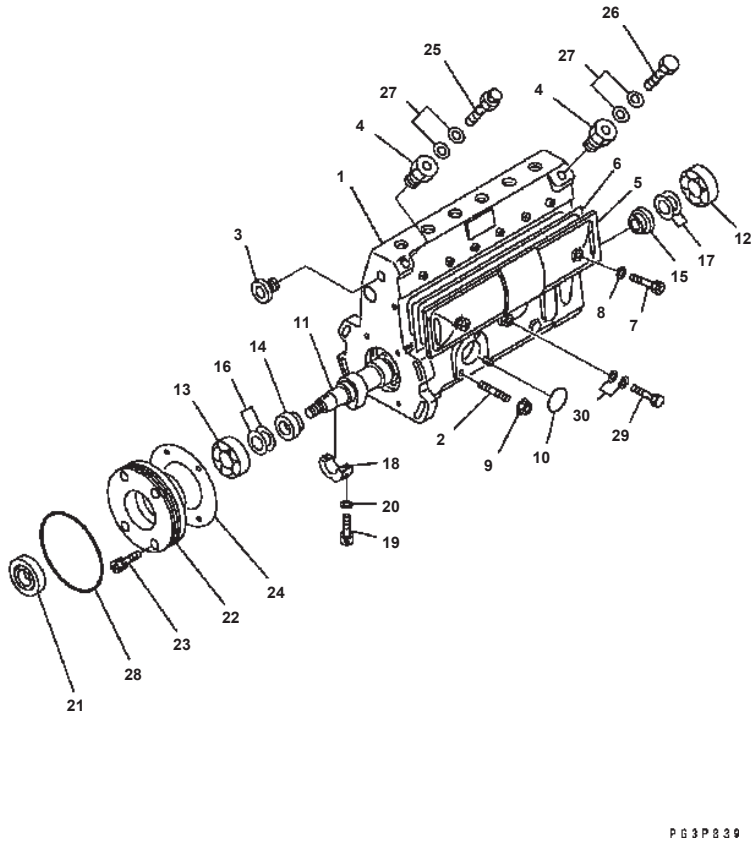

SAA6D102E-2 S/N 30380718-UP

FUEL INJECTION PUMP (PUMP) (1/2) (INNER PARTS)

Item	Part No.	Description	Qty	Options
	6738-71-1150	INJECTION PUMP ASS'Y THIS ASSEMBLY CONSISTS OF ALL PARTS SHOWN IN FIGS.A401P-02H6 TO A401P-07H6	1	SN:30380718--
	DK101062-9340	· PUMP ASS'Y THIS ASSEMBLY CONSISTS OF ALL PARTS SHOWN IN FIGS.A401P-02H6 AND A401P-03H6	1	SN:30380718--
1	DK131073-9120	· · HOUSING	1	SN:30380718--
2	DK029040-6020	· · · STUD	3	SN:30380718--
3	DK134026-0000	· · · PLUG	1	SN:30380718--
4	DK131002-2000	· · · ADAPTER	2	SN:30380718--
5	DK131028-6020	· · COVER	1	SN:30380718--
6	DK131011-0800	· · · GASKET	1	SN:30380718--
7	DK131017-1000	· · SCREW	2	SN:30380718--
8	DK029340-6020	· · GASKET	2	SN:30380718--
9	DK139206-0400	· · NUT	3	SN:30380718--
10	DK029633-1010	· · O-RING	1	SN:30380718--
11	DK131371-4900	· · CAMSHAFT	1	SN:30380718--
12	DK016630-2030	· · BEARING	AR	SN:30380718--
	DK028201-7020	· · BEARING	AR	SN:30380718--
13	DK016640-2030	· · BEARING	AR	SN:30380718--
	DK028202-0020	· · BEARING	AR	SN:30380718--
14	DK131302-1300	· · RING	1	SN:30380718--
15	DK131302-1700	· · RING	1	SN:30380718--
16	DK029312-0310	· · SHIM¤ 0.10MM	AR	SN:30380718--
	DK029312-0320	· · SHIM¤ 0.12MM	AR	SN:30380718--
	DK029312-0330	· · SHIM¤ 0.14MM	AR	SN:30380718--
	DK029312-0340	· · SHIM¤ 0.16MM	AR	SN:30380718--
	DK029312-0350	· · SHIM¤ 0.18MM	AR	SN:30380718--
	DK029312-0360	· · SHIM¤ 0.3MM	AR	SN:30380718--
	DK029312-0370	· · SHIM¤ 0.5MM	AR	SN:30380718--
	DK029312-0380	· · SHIM¤ 1.0MM	AR	SN:30380718--
17	DK029311-7010	· · SHIM¤ 0.1MM	AR	SN:30380718--
	DK029311-7020	· · SHIM¤ 0.12MM	AR	SN:30380718--
	DK029311-7030	· · SHIM¤ 0.14MM	AR	SN:30380718--
	DK029311-7040	· · SHIM¤ 0.16MM	AR	SN:30380718--
	DK029311-7050	· · SHIM¤ 0.18MM	AR	SN:30380718--
	DK029311-7090	· · SHIM¤ 0.3MM	AR	SN:30380718--
	DK029311-7060	· · SHIM¤ 0.5MM	AR	SN:30380718--

Ref. A401P-02H6 Page 030430

SAA6D102E-2 S/N 30380718-UP

FUEL INJECTION PUMP (PUMP) (1/2) (INNER PARTS)

Item	Part No.	Description	Qty	Options
	DK029311-7210	・・ SHIM¤ 0.7MM	AR	SN:30380718--
	DK029311-7070	・・ SHIM¤ 1.0MM	AR	SN:30380718--
	DK029311-7220	・・ SHIM¤ 1.4MM	AR	SN:30380718--
	DK139417-0000	・・ SHIM¤ 2.40MM	AR	SN:30380718--
18	DK131306-1000	・・ BEARING {CENTER}	1	SN:30380718--
19	DK029050-5010	・・ SCREW	2	SN:30380718--
20	DK026505-0940	・・ GASKET	2	SN:30380718--
21	DK029622-0190	・・ SEAL {OIL}	1	SN:30380718--
22	DK131330-6400	・・ COVER	1	SN:30380718--
23	DK029010-6810	・・ BOLT	4	SN:30380718--
24	DK131321-1900	・・ GASKET	1	SN:30380718--
25	DK131424-3420	・・ VALVE	1	SN:30380718--
26	DK131401-0020	・・ BOLT {EYE}	1	SN:30380718--
27	DK029341-4130	・・ GASKET	4	SN:30380718--
28	DK029637-5030	・・ O-RING	1	SN:30380718--
29	DK029731-0120	・・ BOLT {EYE}	1	SN:30380718--
30	DK029341-0110	・・ GASKET	2	SN:30380718--

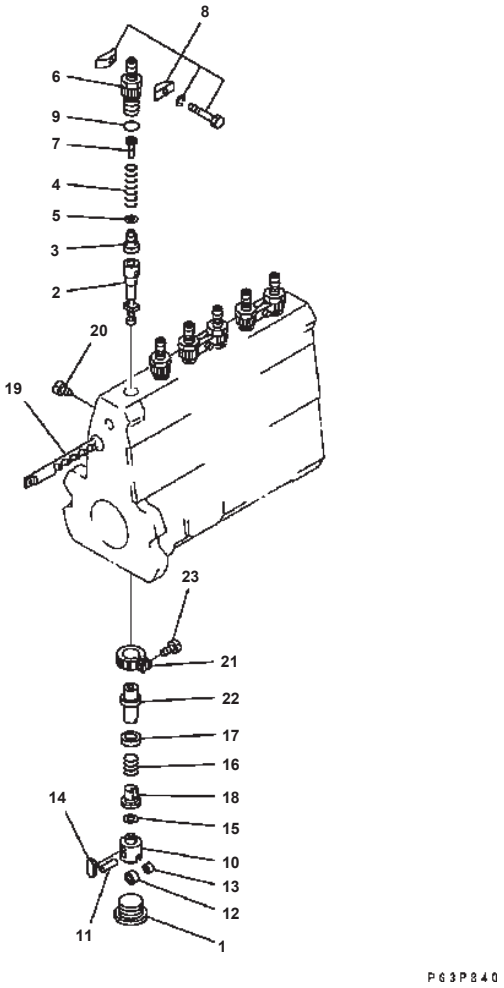

FUEL INJECTION PUMP (PUMP) (2/2) (INNER PARTS)

Item	Part No.	Description	Qty	Options
	(6738-71-1150)	INJECTION PUMP ASS'Y THIS ASSEMBLY CONSISTS OF ALL PARTS SHOWN IN FIGS.A401P-02H6 TO A401P-07H6	1	SN:30380718--
	(DK101062-9340)	· PUMP ASS'Y THIS ASSEMBLY CONSISTS OF ALL PARTS SHOWN IN FIGS.A401P-02H6 AND A401P-03H6	1	SN:30380718--
1	DK131034-1401	· · PLUG	6	SN:30380718--
2	DK131154-6520	· · PLUNGER ASS'Y	6	SN:30380718--
3	DK131110-7720	· · VALVE {DELIVERY}	6	SN:30380718--
4	DK131112-5600	· · SPRING	6	SN:30380718--
5	DK131115-1600	· · GASKET	6	SN:30380718--
6	DK131116-8420	· · HOLDER	6	SN:30380718--
7	DK131117-3100	· · STOPPER	6	SN:30380718--
8	DK131122-0520	· · PLATE ASS'Y	3	SN:30380718--
9	DK139717-0100	· · O-RING	6	SN:30380718--
10	DK131200-2820	· · TAPPET ASS'Y	6	SN:30380718--
11	DK131203-0800	· · · PIN	1	SN:30380718--
12	DK131204-1000	· · · ROLLER	1	SN:30380718--
13	DK131205-0500	· · · BUSHING	1	SN:30380718--
14	DK131206-0200	· · · GUIDE	1	SN:30380718--
15	DK029311-0580	· · SHIM¤ 0.2MM	AR	SN:30380718--
	DK029311-0590	· · SHIM¤ 0.25MM	AR	SN:30380718--
	DK029311-0020	· · SHIM¤ 0.30MM	AR	SN:30380718--
	DK029311-0600	· · SHIM¤ 0.35MM	AR	SN:30380718--
	DK029311-0030	· · SHIM¤ 0.40MM	AR	SN:30380718--
	DK029311-0610	· · SHIM¤ 0.45MM	AR	SN:30380718--
	DK029311-0040	· · SHIM¤ 0.50MM	AR	SN:30380718--
	DK029311-0270	· · SHIM¤ 0.55MM	AR	SN:30380718--
	DK029311-0050	· · SHIM¤ 0.6MM	AR	SN:30380718--
	DK029311-0280	· · SHIM¤ 0.65MM	AR	SN:30380718--
	DK029311-0060	· · SHIM¤ 0.7MM	AR	SN:30380718--
	DK029311-0290	· · SHIM¤ 0.75MM	AR	SN:30380718--
	DK029311-0070	· · SHIM¤ 0.8MM	AR	SN:30380718--
	DK029311-0310	· · SHIM¤ 0.85MM	AR	SN:30380718--
	DK029311-0080	· · SHIM¤ 0.9MM	AR	SN:30380718--
	DK029311-0320	· · SHIM¤ 0.95MM	AR	SN:30380718--
	DK029311-0090	· · SHIM¤ 1.0MM	AR	SN:30380718--
	DK029311-0330	· · SHIM¤ 1.05MM	AR	SN:30380718--

SAA6D102E-2 S/N 30380718-UP

FUEL INJECTION PUMP (PUMP) (2/2) (INNER PARTS)

Item	Part No.	Description	Qty	Options
	DK029311-0110	・・ SHIM¤ 1.1MM	AR	SN:30380718--
	DK029311-0340	・・ SHIM¤ 1.15MM	AR	SN:30380718--
	DK029311-0120	・・ SHIM¤ 1.2MM	AR	SN:30380718--
	DK029311-0350	・・ SHIM¤ 1.25MM	AR	SN:30380718--
	DK029311-0130	・・ SHIM¤ 1.3MM	AR	SN:30380718--
	DK029311-0620	・・ SHIM¤ 1.35MM	AR	SN:30380718--
	DK029311-0140	・・ SHIM¤ 1.4MM	AR	SN:30380718--
	DK029311-0630	・・ SHIM¤ 1.45MM	AR	SN:30380718--
	DK029311-0490	・・ SHIM¤ 1.5MM	AR	SN:30380718--
	DK029311-0710	・・ SHIM¤ 1.55MM	AR	SN:30380718--
	DK029311-0500	・・ SHIM¤ 1.6MM	AR	SN:30380718--
16	DK131215-2500	・・ SPRING	6	SN:30380718--
17	DK131216-0100	・・ SEAT {SPRING}	6	SN:30380718--
18	DK131217-0200	・・ SEAT {SPRING}	6	SN:30380718--
19	DK131256-0900	・・ RACK {CONTROL}	1	SN:30380718--
20	DK131226-0300	・・ SCREW	1	SN:30380718--
21	DK131240-0100	・・ PINION	6	SN:30380718--
22	DK131241-0100	・・ SLEEVE {CONTROL}	6	SN:30380718--
23	DK131242-0100	・・ SCREW	6	SN:30380718--

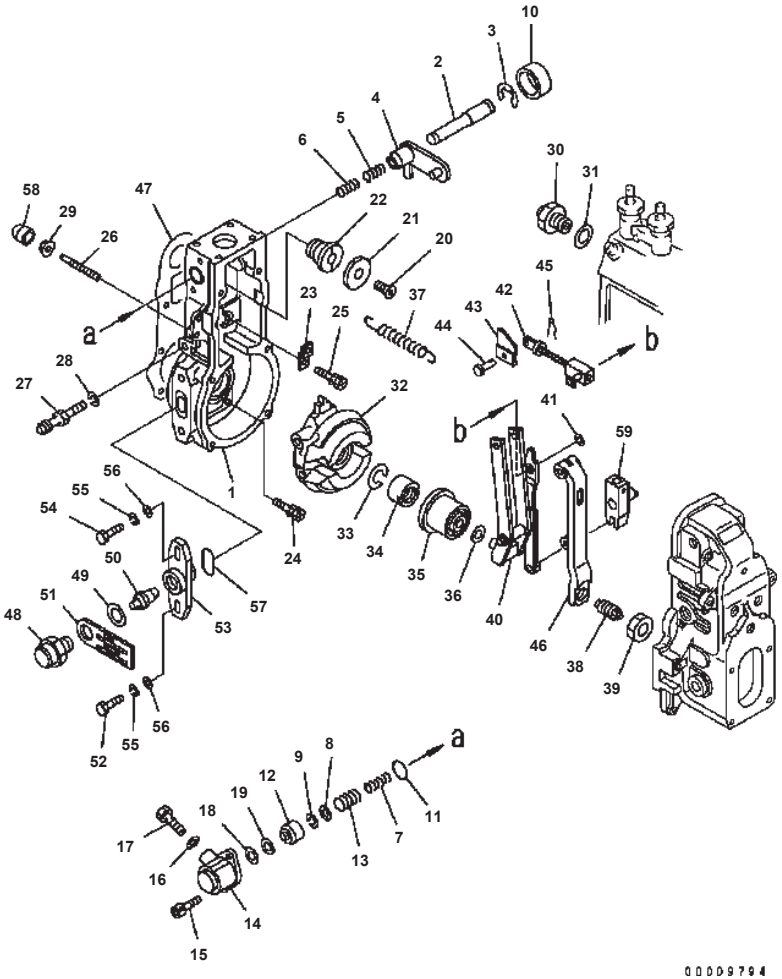

FUEL INJECTION PUMP (GOVERNOR) (1/3) (INNER PARTS)

Item	Part No.	Description	Qty	Options
	(6738-71-1150)	INJECTION PUMP ASS'Y THIS ASSEMBLY CONSISTS OF ALL PARTS SHOWN IN FIGS.A401P-02H6 TO A401P-07H6	1	SN:30380718--
	DK105404-6001	· GOVERNOR ASS'Y THIS ASSEMBLY CONSISTS OF ALL PARTS SHOWN IN FIGS.A401P-04H6 TO A401P-06H6	1	SN:30380718--
	DK154620-0720	· · HOUSING ASS'Y	1	SN:30380718--
1	DK154620-0020	· · · HOUSING	1	SN:30380718--
2	DK154621-3701	· · · SHAFT	1	SN:30380718--
3	DK016010-0740	· · · RING {SNAP}	1	SN:30380718--
4	DK154415-3320	· · · LEVER	1	SN:30380718--
5	DK154415-3400	· · · SPRING	1	SN:30380718--
6	DK154621-3800	· · · SPRING	1	SN:30380718--
7	DK154621-4400	· · · SPRING	1	SN:30380718--
8	DK139406-1400	· · · SHIM	1	SN:30380718--
9	DK160100-0540	· · · RING {SNAP}	1	SN:30380718--
10	DK154621-3600	· · · CAP	1	SN:30380718--
11	DK016520-2210	· · · O-RING	1	SN:30380718--
12	DK154621-3500	· · · BUSHING	1	SN:30380718--
13	DK154621-3900	· · · SPRING	1	SN:30380718--
14	DK154620-1600	· · · COVER	1	SN:30380718--
15	DK010235-1640	· · · BOLT {SOCKET}	2	SN:30380718--
16	DK026510-1440	· · · GASKET	1	SN:30380718--
17	DK029111-0010	· · · PLUG	1	SN:30380718--
18	DK139308-1500	· · · WASHER	1	SN:30380718--
19	DK029300-7020	· · · WASHER	4	SN:30380718--
20	DK154621-4300	· · BOLT	1	SN:30380718--
21	DK154621-4100	· · WASHER	1	SN:30380718--
22	DK154620-7900	· · ADAPTER	1	SN:30380718--
23	DK154375-9020	· · PLATE	1	SN:30380718--
24	DK029010-6810	· · BOLT	5	SN:30380718--
25	DK020106-1840	· · BOLT	1	SN:30380718--
26	DK154013-6000	· · SCREW	1	SN:30380718--
27	DK154013-2320	· · BOLT	1	SN:30380718--
28	DK014110-8440	· · WASHER {SPRING}	1	SN:30380718--
29	DK154011-4900	· · NUT {LOCK}	1	SN:30380718--
30	DK155404-5120	· · LIMITER	1	SN:30380718--

SAA6D102E-2 S/N 30380718-UP

FUEL INJECTION PUMP (GOVERNOR) (1/3)
(INNER PARTS)

Item	Part No.	Description	Qty	Options
31	DK026518-2240	・・ GASKET	1	SN:30380718--
32	DK154621-2120	・・ FLYWEIGHT ASS'Y	1	SN:30380718--
33	DK029321-2020	・・ WASHER {SPRING}	1	SN:30380718--
34	DK029231-2030	・・ NUT	1	SN:30380718--
35	DK154123-2320	・・ SLEEVE	1	SN:30380718--
36	DK029311-0010	・・ SHIM¤ 0.20MM	AR	SN:30380718--
	DK029311-0180	・・ SHIM¤ 0.30MM	AR	SN:30380718--
	DK029311-0190	・・ SHIM¤ 0.40MM	AR	SN:30380718--
	DK139410-0000	・・ SHIM¤ 0.50MM	AR	SN:30380718--
	DK029311-0210	・・ SHIM¤ 1.00MM	AR	SN:30380718--
	DK139410-0100	・・ SHIM¤ 1.50MM	AR	SN:30380718--
	DK139410-3000	・・ SHIM¤ 2.00MM	AR	SN:30380718--
	DK139410-3100	・・ SHIM¤ 3.00MM	AR	SN:30380718--
	DK139410-3200	・・ SHIM¤ 4.00MM	AR	SN:30380718--
37	DK154154-5200	・・ SPRING	1	SN:30380718--
38	DK154177-2420	・・ CAPSULE {SPRING}	1	SN:30380718--
39	DK029201-6010	・・ NUT	1	SN:30380718--
40	DK154218-7320	・・ GUIDE LEVER ASS'Y	1	SN:30380718--
41	DK016010-0540	・・ RING {SNAP}	1	SN:30380718--
42	DK154235-4720	・・ LINK	1	SN:30380718--
43	DK154232-3200	・・ CONNECTOR	1	SN:30380718--
44	DK154222-5800	・・ PIN	1	SN:30380718--
45	DK155402-3800	・・ PIN	1	SN:30380718--
46	DK154239-5120	・・ TENSION PULLEY ASS'Y	1	SN:30380718--
47	DK154390-0000	・・ GASKET	1	SN:30380718--
48	DK154621-3000	・・ PLUG	1	SN:30380718--
49	DK026518-2240	・・ GASKET	1	SN:30380718--
50	DK154620-8800	・・ PIN	1	SN:30380718--
51	DK154620-8901	・・ PLATE	1	SN:30380718--
52	DK010038-1840	・・ BOLT	1	SN:30380718--
53	DK154620-1500	・・ FLANGE	1	SN:30380718--
54	DK154620-4700	・・ BOLT	1	SN:30380718--
55	DK014110-8440	・・ WASHER {SPRING}	2	SN:30380718--
56	DK014010-8140	・・ WASHER	2	SN:30380718--

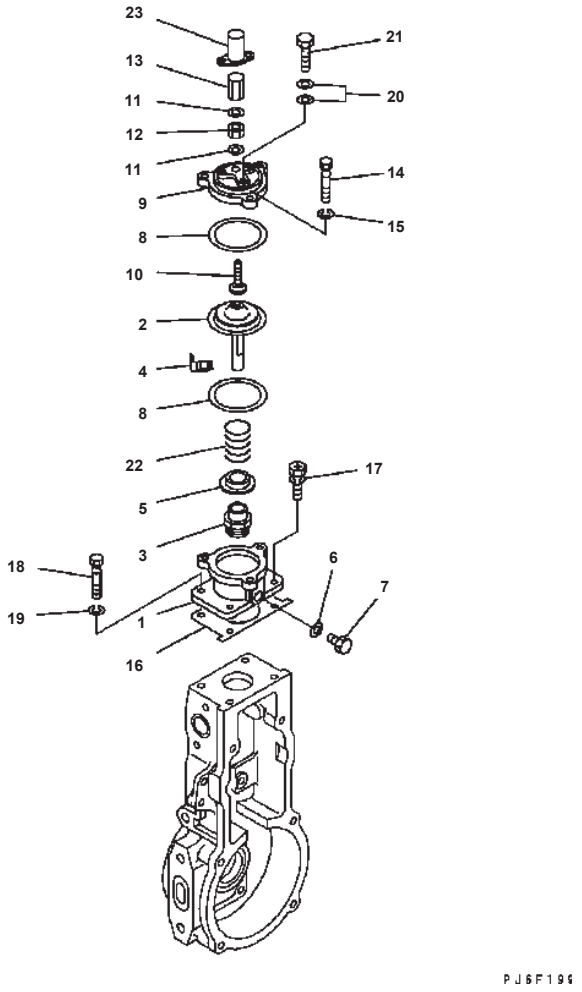

FUEL INJECTION PUMP (GOVERNOR) (2/3) (INNER PARTS)

Item	Part No.	Description	Qty	Options
	(6738-71-1150)	INJECTION PUMP ASS'Y THIS ASSEMBLY CONSISTS OF ALL PARTS SHOWN IN FIGS.A401P-02H6 TO A401P-07H6	1	SN:30380718--
	(DK105404-6001)	・ GOVERNOR ASS'Y THIS ASSEMBLY CONSISTS OF ALL PARTS SHOWN IN FIGS.A401P-04H6 TO A401P-06H6	1	SN:30380718--
	DK154422-7820	・・ BOOST COMPENSATOR	1	SN:30380718--
1	DK154422-7101	・・・ HOUSING	1	SN:30380718--
2	DK154400-9520	・・・ DIAGRAM	1	SN:30380718--
3	DK154415-1200	・・・ BUSHING	1	SN:30380718--
4	DK146711-0000	・・・ PLATE	1	SN:30380718--
5	DK154415-1300	・・・ NUT	1	SN:30380718--
6	DK029331-2130	・・・ GASKET	1	SN:30380718--
7	DK029111-2090	・・・ PLUG	1	SN:30380718--
8	DK154413-2600	・・・ GASKET	2	SN:30380718--
9	DK154404-5600	・・・ COVER	1	SN:30380718--
10	DK154415-1800	・・・ SCREW	1	SN:30380718--
11	DK026506-1040	・・・ GASKET	2	SN:30380718--
12	DK013030-6040	・・・ NUT	1	SN:30380718--
13	DK154035-1600	・・・ NUT	1	SN:30380718--
14	DK154062-2900	・・・ BOLT	3	SN:30380718--
15	DK014110-6440	・・・ WASHER {SPRING}	3	SN:30380718--
16	DK154620-3200	・・・ GASKET	1	SN:30380718--
17	DK020106-1640	・・・ BOLT	3	SN:30380718--
18	DK154062-5001	・・・ BOLT	1	SN:30380718--
19	DK014110-6440	・・・ WASHER {SPRING}	1	SN:30380718--
20	DK029341-0110	・・・ GASKET	2	SN:30380718--
21	DK029731-0120	・・・ BOLT {EYE}	1	SN:30380718--
22	DK154402-3000	・・ SPRING	1	SN:30380718--
23	DK154062-2720	・・ CAP	1	SN:30380718--

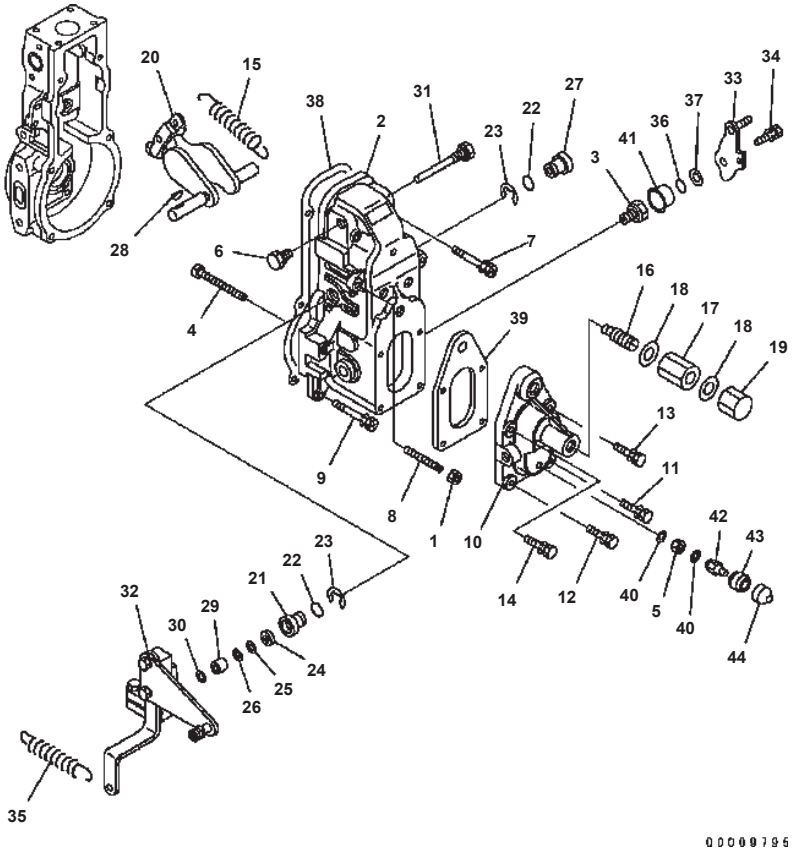

FUEL INJECTION PUMP (GOVERNOR) (3/3) (INNER PARTS)

Item	Part No.	Description	Qty	Options
	(6738-71-1150)	INJECTION PUMP ASS'Y THIS ASSEMBLY CONSISTS OF ALL PARTS SHOWN IN FIGS.A401P-02H6 TO A401P-07H6	1	SN:30380718--
	(DK105404-6001)	· GOVERNOR ASS'Y THIS ASSEMBLY CONSISTS OF ALL PARTS SHOWN IN FIGS.A401P-04H6 TO A401P-06H6	1	SN:30380718--
1	DK154011-0100	· · NUT {LOCK}	1	SN:30380718--
	DK154501-1720	· · COVER ASS'Y	1	SN:30380718--
2	DK154501-1700	· · · COVER	1	SN:30380718--
3	DK154321-0400	· · · BUSHING	1	SN:30380718--
4	DK154031-4700	· · SCREW	1	SN:30380718--
5	DK139208-0400	· · NUT	1	SN:30380718--
6	DK154036-0300	· · PLUG	1	SN:30380718--
7	DK139006-7100	· · BOLT	2	SN:30380718--
8	DK154010-0200	· · SCREW	1	SN:30380718--
9	DK020106-3840	· · BOLT	4	SN:30380718--
10	DK154064-4200	· · COVER	1	SN:30380718--
11	DK020006-1640	· · BOLT	1	SN:30380718--
12	DK020006-1640	· · BOLT	1	SN:30380718--
13	DK020006-1640	· · BOLT	1	SN:30380718--
14	DK020006-1640	· · BOLT	1	SN:30380718--
15	DK154150-0200	· · SPRING {GOVERNOR}	1	SN:30380718--
16	DK154158-5720	· · CAPSULE {SPRING}	1	SN:30380718--
17	DK029201-2290	· · NUT	1	SN:30380718--
18	DK026512-1540	· · GASKET	2	SN:30380718--
19	DK154159-1200	· · NUT {CAP}	1	SN:30380718--
20	DK154200-7020	· · LEVER ASS'Y {SWIVEL}	1	SN:30380718--
21	DK154204-4300	· · BUSHING	1	SN:30380718--
22	DK029631-8020	· · O-RING	2	SN:30380718--
23	DK016010-1640	· · RING {SNAP}	2	SN:30380718--
24	DK139611-0000	· · SEAL {OIL}	1	SN:30380718--
25	DK139411-0000	· · SHIM¤ 0.40MM	1	SN:30380718--
26	DK029311-1070	· · SHIM¤ 0.50MM	AR	SN:30380718--
27	DK154204-4400	· · BUSHING	1	SN:30380718--
28	DK025803-1310	· · KEY¤ 13MM	1	SN:30380718--
29	DK154206-2800	· · COLLAR	1	SN:30380718--
30	DK154206-0200	· · WASHER¤ 1.0MM	AR	SN:30380718--

SAA6D102E-2 S/N 30380718-UP

FUEL INJECTION PUMP (GOVERNOR) (3/3)
(INNER PARTS)

Item	Part No.	Description	Qty	Options
31	DK154237-1100	・・PIN	1	SN:30380718--
32	DK154395-8920	・・LEVER	1	SN:30380718--
33	DK154382-3720	・・LEVER	1	SN:30380718--
34	DK020006-1840	・・BOLT	1	SN:30380718--
35	DK154314-2500	・・SPRING	1	SN:30380718--
36	DK029631-0030	・・O-RING	1	SN:30380718--
37	DK029311-0220	・・SHIM¤ 0.2MM	AR	SN:30380718--
	DK029311-0230	・・SHIM¤ 0.5MM	AR	SN:30380718--
38	DK154390-0300	・・GASKET	1	SN:30380718--
39	DK154390-5000	・・GASKET	1	SN:30380718--
40	DK026508-1140	・・GASKET	2	SN:30380718--
41	DK154322-0600	・・CAP	1	SN:30380718--
42	DK154035-2900	・・NUT {CAP}	1	SN:30380718--
43	DK154062-3900	・・ADAPTER	1	SN:30380718--
44	DK154062-4020	・・CAP	1	SN:30380718--

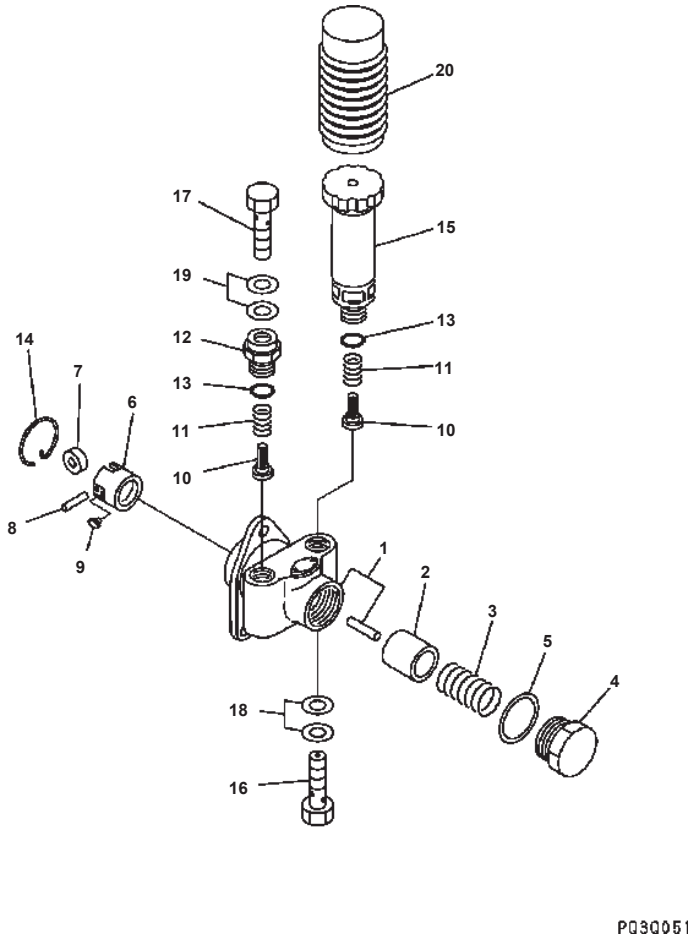

FUEL INJECTION PUMP (FEED PUMP) (INNER PARTS)

Item	Part No.	Description	Qty	Options
	(6738-71-1150)	INJECTION PUMP ASS'Y THIS ASSEMBLY CONSISTS OF ALL PARTS SHOWN IN FIGS.A401P-02H6 TO A401P-07H6	1	SN:30380718--
	DK105220-5960	· FEED PUMP ASS'Y	1	SN:30380718--
1	DK152003-1020	· · HOUSING	1	SN:30380718--
2	DK152100-1120	· · PISTON	1	SN:30380718--
3	DK152102-1600	· · SPRING	1	SN:30380718--
4	DK152105-1600	· · PLUG	1	SN:30380718--
5	DK029332-6030	· · GASKET	1	SN:30380718--
6	DK152111-2820	· · TAPPET ASS'Y	1	SN:30380718--
7	DK152112-0100	· · · ROLLER	1	SN:30380718--
8	DK152113-0700	· · · PIN	1	SN:30380718--
9	DK152114-0400	· · · GUIDE	2	SN:30380718--
10	DK152115-0500	· · VALVE	2	SN:30380718--
11	DK152116-0200	· · SPRING	2	SN:30380718--
12	DK152118-0900	· · ADAPTER	1	SN:30380718--
13	DK029631-6060	· · O-RING	2	SN:30380718--
14	DK152121-0200	· · RING {SNAP}	1	SN:30380718--
15	DK152200-5420	· · PUMP {PRIMING}	1	SN:30380718--
16	DK152300-5920	· · BOLT {JOINT}	1	SN:30380718--
17	DK029731-4680	· · BOLT {JOINT}	1	SN:30380718--
18	DK029341-4130	· · GASKET	2	SN:30380718--
19	DK029341-4130	· · GASKET	2	SN:30380718--
20	DK152320-0100	· · COVER	1	SN:30380718--

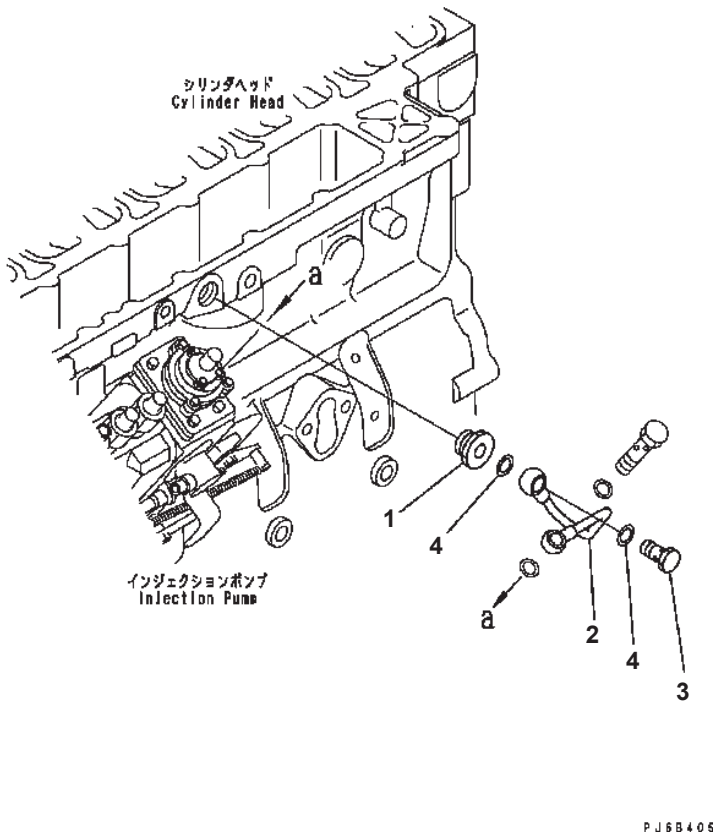

BOOST TUBE

Item	Part No.	Description	Qty	Options
1	6735-71-5460	NIPPLE	1	SN:30380718--
2	6738-71-5450	TUBE	1	SN:30380718--
3	6732-71-6510	BOLT, JOINT	1	SN:30380718--
4	6735-71-3840	WASHER, SEAL	2	SN:30380718--

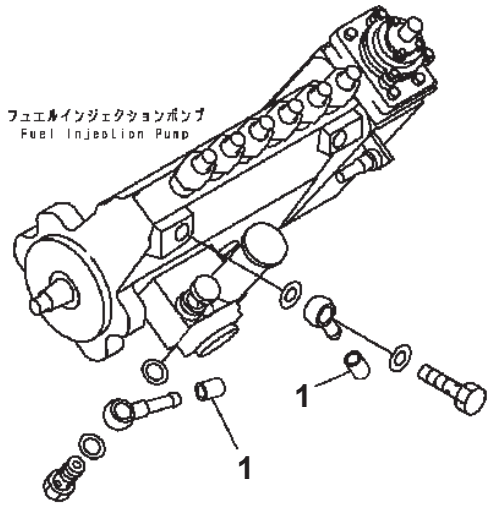

PJ6B431

FUEL INLET AND OUTLET JOINT CAP

Item	Part No.	Description	Qty	Options
1	6732-71-5740	CAP (FOR SHIPPING)	2	SN:30380718--

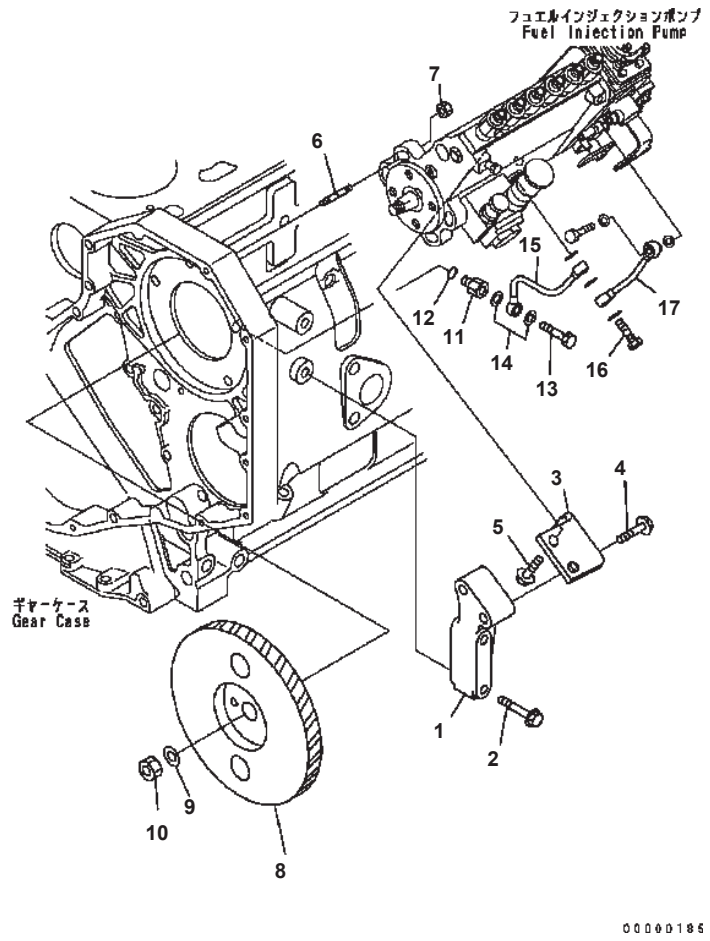

SAA6D102E-2 S/N 30380718-UP

FUEL INJECTION PUMP MOUNTING

Item	Part No.	Description	Qty	Options
1	6738-71-3620	BRACKET, FUEL PUMP	1	SN:30380718--
2	6732-61-3110	BOLT	2	SN:30380718--
3	6738-71-3610	BRACKET, FUEL PUMP	1	SN:30380718--
4	6735-71-3220	BOLT	2	SN:30380718--
5	6734-71-5610	BOLT	2	SN:30380718--
6	6738-71-3120	STUD	4	SN:30380718--
7	6736-81-6170	NUT	4	SN:30380718--
8	6738-71-3100	GEAR ASS'Y, FUEL PUMP	1	SN:30380718--
	6738-71-3110	· GEAR, FUEL PUMP	1	SN:30380718--
	6738-71-3810	· DAMPER, VIBRATION	1	SN:30380718--
9	6130-32-1361	WASHER, PLAIN	1	SN:30380718--
10	01582-01411	NUT	1	SN:30380718--
11	6732-71-5450	NIPPLE, FEMALE	1	SN:30380718--
12	6215-81-9710	O-RING	1	SN:30380718--
13	07206-30710	BOLT	1	SN:30380718--
14	6731-71-5860	RING	5	SN:30380718--
15	6735-71-5411	TUBE, OIL	1	SN:30380718--
16	6735-71-5420	BOLT	1	SN:30380718--
17	6735-71-5430	TUBE, LUBRICATING OIL SUPPLY	1	SN:30380718--

Ref. A408P-01B0 Page 030510

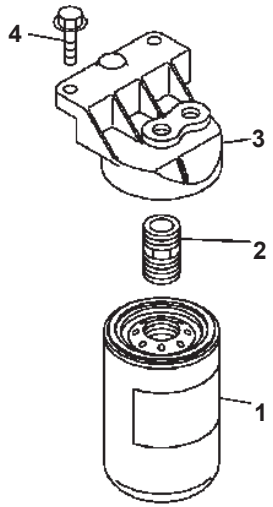

PWD1084

SAA6D102E-2 S/N 30380718-UP

FUEL FILTER

Item	Part No.	Description	Qty	Options
1	6732-71-6112	CARTRIDGE, FUEL	1	SN:30380718--
2	6732-71-6650	ADAPTER	1	SN:30380718--
3	6735-71-6230	HEAD	1	SN:30380718--
4	6732-61-6140	BOLT	2	SN:30380718--

Ref. A411P-01A0 Page 030520

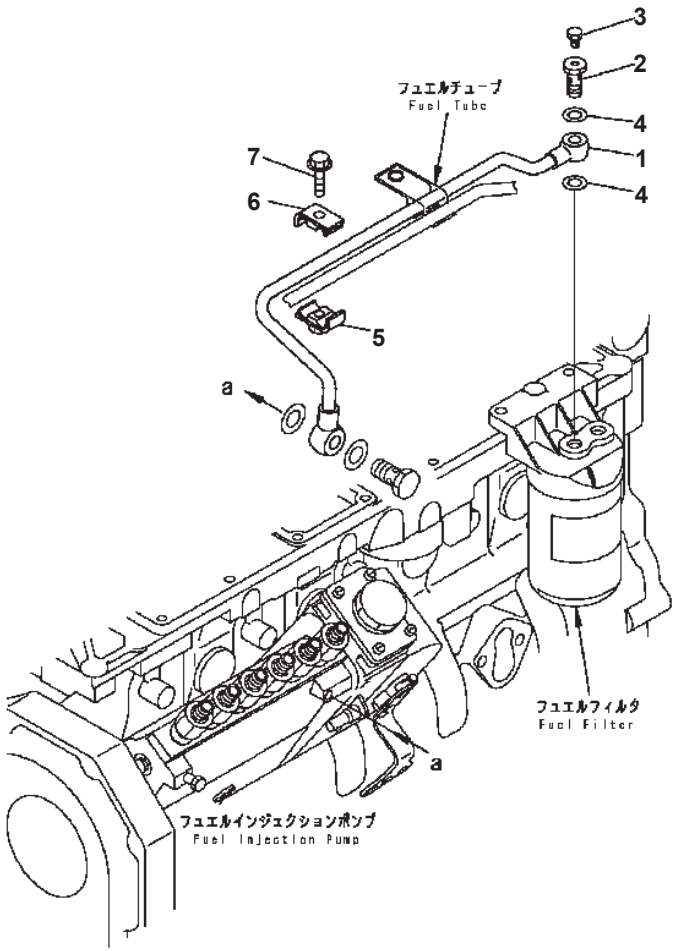

FUEL FILTER PIPING

Item	Part No.	Description	Qty	Options
1	6735-71-5160	TUBE	1	SN:30380718--
	6735-71-6510	BOLT ASS'Y	1	SN:30380718--
2	6735-71-6530	· BOLT {JOINT}	1	SN:30380718--
3	6735-71-6750	· BOLT	1	SN:30380718--
4	6735-71-3840	GASKET	2	SN:30380718--
5	6735-71-5170	CLAMP	1	SN:30380718--
6	6735-71-5180	CLAMP	1	SN:30380718--
7	6735-71-5190	BOLT	1	SN:30380718--

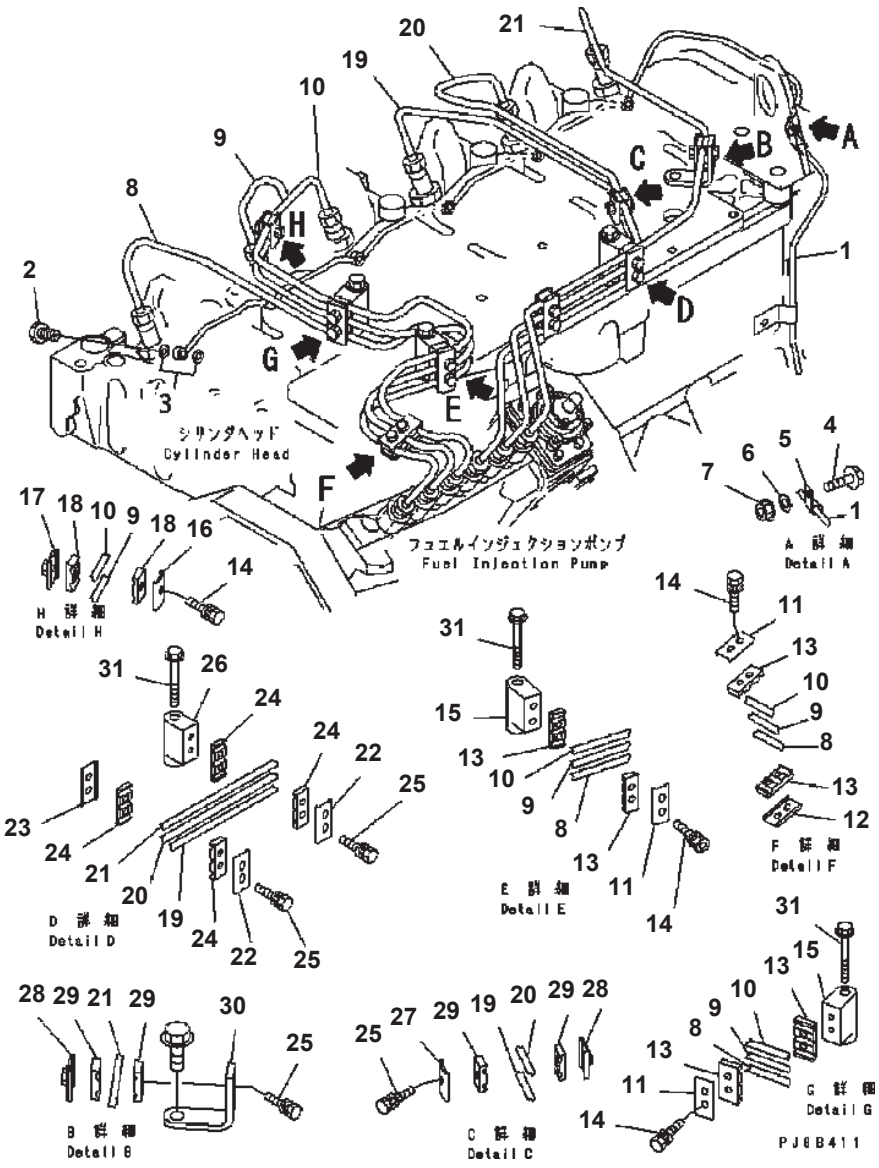

FUEL PIPING

Item	Part No.	Description	Qty	Options
1	6738-71-5520	MANIFOLD	1	SN:30380718--
2	6732-71-6240	BOLT {JOINT}	6	SN:30380718--
3	6732-71-6260	GASKET (K1)	12	SN:30380718--
4	6732-21-5160	BOLT	1	SN:30380718--
5	04434-50508	CLIP	1	SN:30380718--
6	6216-64-3990	WASHER	1	SN:30380718--
7	6732-71-3210	NUT	1	SN:30380718--
8	6738-71-5110	TUBE, NO. 1	1	SN:30380718--
9	6738-71-5120	TUBE, NO. 2	1	SN:30380718--
10	6738-71-5130	TUBE, NO. 3	1	SN:30380718--
11	6734-71-5710	BRACKET	3	SN:30380718--
12	6735-71-5830	BRACKET	1	SN:30380718--
13	6734-74-5720	ISOLATOR	6	SN:30380718--
14	6734-71-5520	BOLT	7	SN:30380718--
15	6734-71-5741	BRACKET	2	SN:30380718--
16	6735-71-5820	BRACKET	1	SN:30380718--
17	6735-71-5840	BRACKET	1	SN:30380718--
18	6735-71-5860	ISOLATOR	2	SN:30380718--
19	6735-71-5643	TUBE, NO. 4	1	SN:30380718--
20	6735-71-5653	TUBE, NO. 5	1	SN:30380718--
21	6735-71-5663	TUBE, NO. 6	1	SN:30380718--
22	6734-71-5710	BRACKET	2	SN:30380718--
23	6735-71-5830	BRACKET	1	SN:30380718--
24	6734-71-5720	ISOLATOR	4	SN:30380718--
25	6734-71-5520	BOLT	6	SN:30380718--
26	6734-71-5741	BRACKET	1	SN:30380718--
27	6735-71-5820	BRACKET	1	SN:30380718--
28	6735-71-5840	BRACKET	2	SN:30380718--
29	6735-71-5860	ISOLATOR	4	SN:30380718--
30	6732-71-5760	BRACKET	1	SN:30380718--
31	6734-11-5210	BOLT	3	SN:30380718--

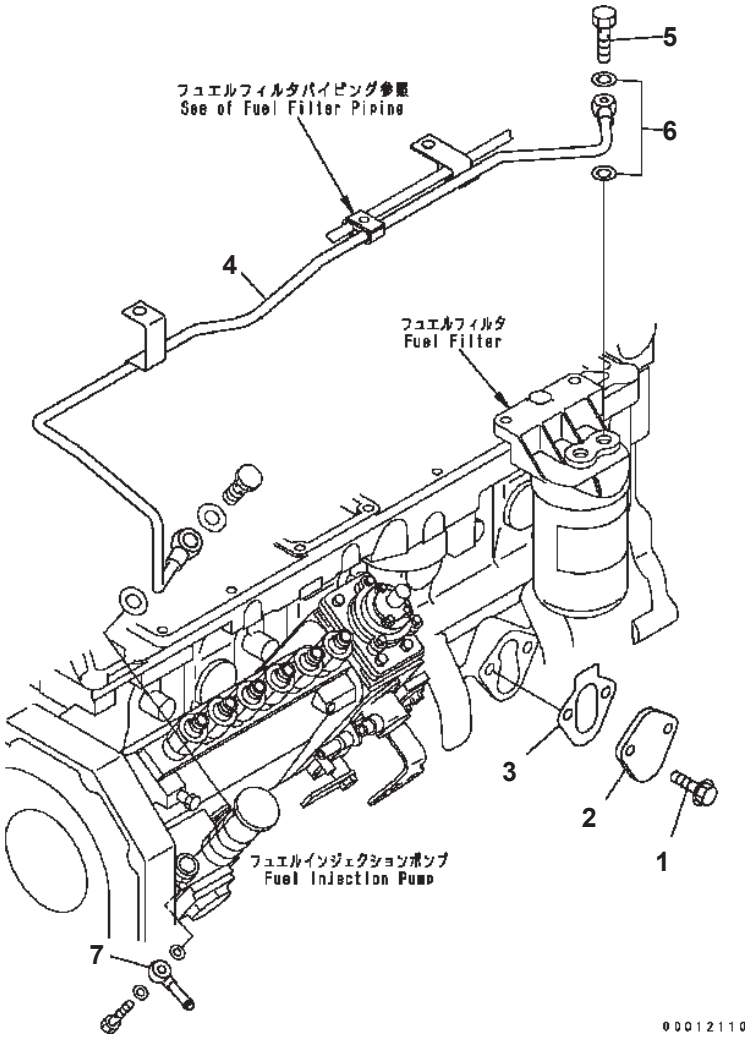

SAA6D102E-2 S/N 30380718-UP

CYLINDER BLOCK BLIND COVER AND PIPING

Item	Part No.	Description	Qty	Options
1	6732-71-3220	BOLT	2	SN:30380718--
2	6736-71-5811	PLATE, COVER	1	SN:30380718--
3	6735-61-6411	GASKET	1	SN:30380718--
4	6735-71-5371	TUBE	1	SN:30380718--
5	6732-71-6510	BOLT	1	SN:30380718--
6	6735-71-3840	GASKET	2	SN:30380718--
7	6141-71-1710	JOINT	1	SN:30380718--

Ref. A417P-01B4 Page 030550

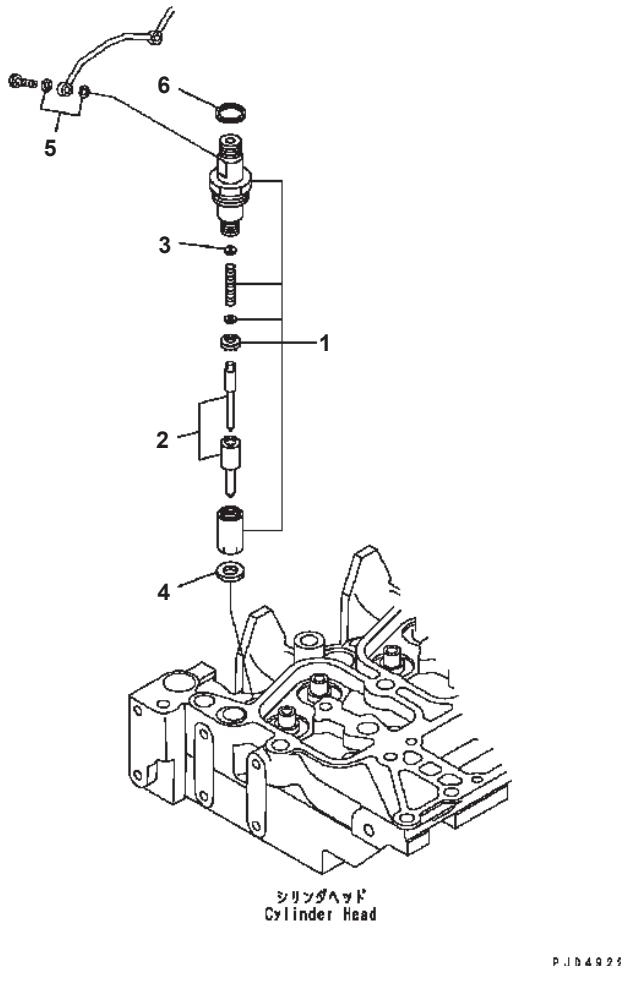

SAA6D102E-2 S/N 30380718-UP

INJECTION NOZZLE

Item	Part No.	Description	Qty	Options
	6738-11-3090	KIT {NOZZLE HOLDER}	6	SN:30380718--
1	6738-11-3100	· NOZZLE HOLDER ASS'Y	1	SN:30380718--
2	6738-11-3120	· · NOZZLE	1	SN:30380718--
3	6734-11-3610	· · SHIM¤ 1.00MM	1	SN:30380718--
	6734-11-3620	· · SHIM¤ 1.04MM	1	SN:30380718--
	6734-11-3630	· · SHIM¤ 1.08MM	1	SN:30380718--
	6734-11-3640	· · SHIM¤ 1.10MM	1	SN:30380718--
	6734-11-3650	· · SHIM¤ 1.14MM	1	SN:30380718--
	6734-11-3660	· · SHIM¤ 1.18MM	1	SN:30380718--
	6734-11-3670	· · SHIM¤ 1.20MM	1	SN:30380718--
	6734-11-3680	· · SHIM¤ 1.24MM	1	SN:30380718--
	6734-11-3690	· · SHIM¤ 1.28MM	1	SN:30380718--
	6734-11-3710	· · SHIM¤ 1.30MM	1	SN:30380718--
	6734-11-3720	· · SHIM¤ 1.34MM	1	SN:30380718--
	6734-11-3730	· · SHIM¤ 1.38MM	1	SN:30380718--
	6734-11-3740	· · SHIM¤ 1.40MM	1	SN:30380718--
	6734-11-3750	· · SHIM¤ 1.44MM	1	SN:30380718--
	6734-11-3760	· · SHIM¤ 1.48MM	1	SN:30380718--
	6734-11-3770	· · SHIM¤ 1.50MM	1	SN:30380718--
	6734-11-3780	· · SHIM¤ 1.54MM	1	SN:30380718--
	6734-11-3790	· · SHIM¤ 1.58MM	1	SN:30380718--
	6734-11-3810	· · SHIM¤ 1.60MM	1	SN:30380718--
	6734-11-3820	· · SHIM¤ 1.64MM	1	SN:30380718--
	6734-11-3830	· · SHIM¤ 1.68MM	1	SN:30380718--
	6734-11-3840	· · SHIM¤ 1.70MM	1	SN:30380718--
	6734-11-3850	· · SHIM¤ 1.74MM	1	SN:30380718--
	6734-11-3860	· · SHIM¤ 1.78MM	1	SN:30380718--
	6734-11-3870	· · SHIM¤ 1.80MM	1	SN:30380718--
	6734-11-3880	· · SHIM¤ 1.84MM	1	SN:30380718--
	6734-11-3890	· · SHIM¤ 1.88MM	1	SN:30380718--
	6734-11-3910	· · SHIM¤ 1.90MM	1	SN:30380718--
	6734-11-3920	· · SHIM¤ 1.94MM	1	SN:30380718--
	6734-11-3930	· · SHIM¤ 1.98MM	1	SN:30380718--
4	6736-11-3430	· · GASKET (K1)	1	SN:30380718--
5	6732-71-6260	· GASKET (K1)	2	SN:30380718--
6	6732-11-3850	· SEAL (K1)	1	SN:30380718--

Ref. A4219-01A6 Page 030560

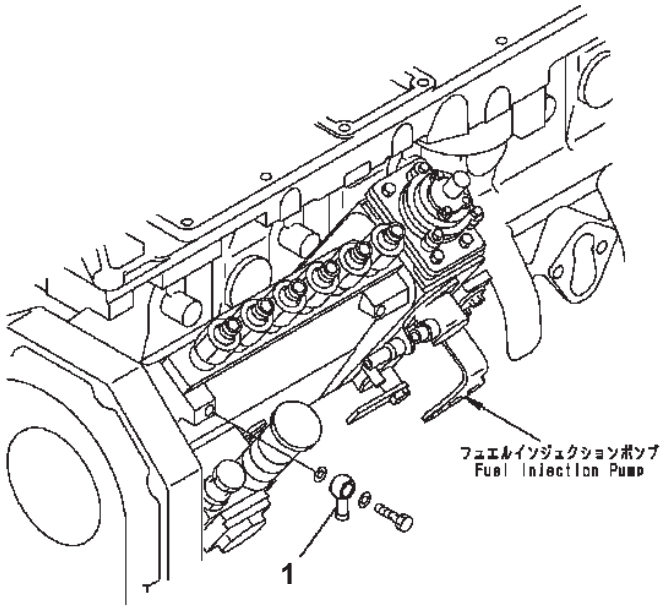

SAA6D102E-2 S/N 30380718-UP

FUEL JOINT

Item	Part No.	Description	Qty	Options
1	6144-71-5750	JOINT	1	SN:30380718--

Ref. A423V-01A0Z Page 030570

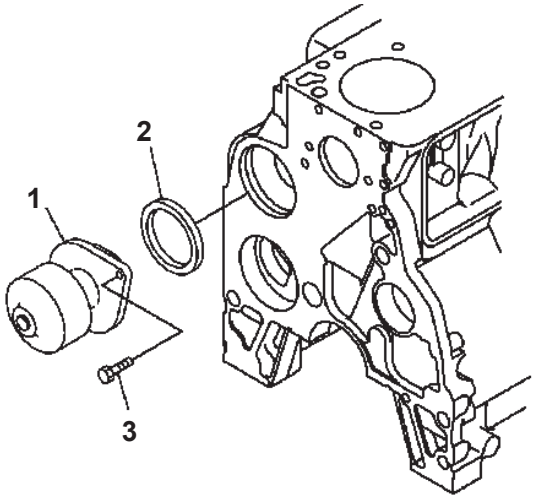

PJ6B451

SAA6D102E-2 S/N 30380718-UP

WATER PUMP

Item	Part No.	Description	Qty	Options
	6736-61-1202	KIT, WATER PUMP	1	SN:30380718--
1	6735-61-1102	· WATER PUMP ASS'Y	1	SN:30380718--
2	6736-61-1520	· SEAL (K2)	1	SN:30380718--
3	6731-61-1370	BOLT	2	SN:30380718--

Ref. A501P-01A3 Page 030580

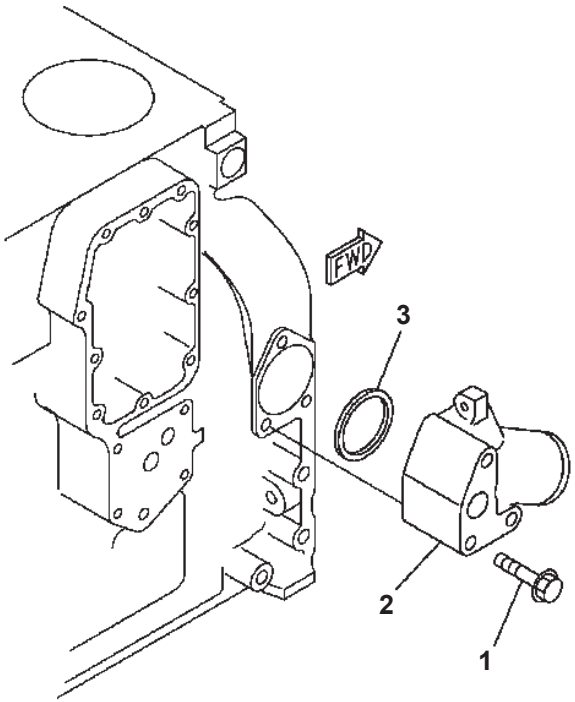

PM36293

SAA6D102E-2 S/N 30380718-UP

WATER CONNECTOR

Item	Part No.	Description	Qty	Options
1	6732-61-6120	BOLT	3	SN:30380718--
2	6731-61-6260	CONNECTOR	1	SN:30380718--
3	6732-61-6130	SEAL (K2)	1	SN:30380718--

Ref. A501R-01A0 Page 030590

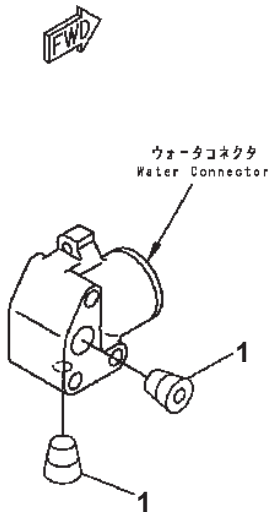

PJ6C419

WATER CONNECTOR PLUG

Item	Part No.	Description	Qty	Options
1	6732-21-1910	PLUG	2	SN:30380718--

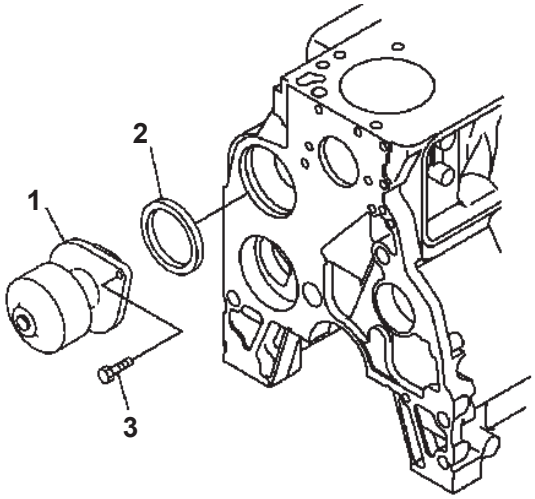

SAA6D102E-2 S/N 30380718-UP

WATER PUMP

Item	Part No.	Description	Qty	Options
	6736-61-1202	KIT {WATER PUMP}	1	SN:30380718--
1	6735-61-1102	· WATER PUMP ASS'Y	1	SN:30380718--
2	6736-61-1520	· SEAL (K2)	1	SN:30380718--
3	6731-61-1370	BOLT	2	SN:30380718--

Ref. A5019-01A0 Page 030610

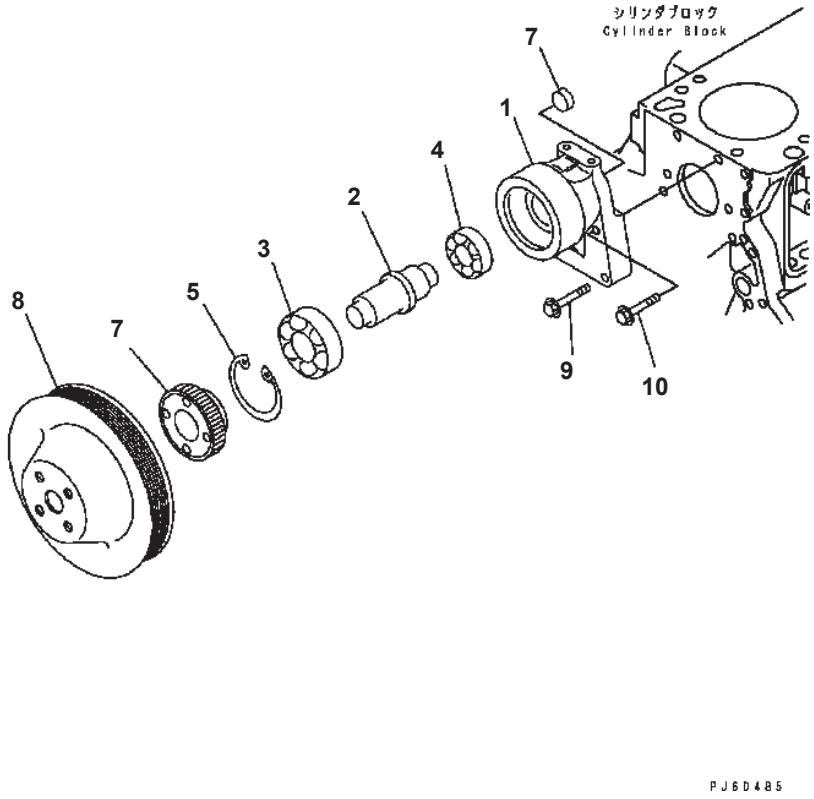

FAN DRIVE PULLEY

Item	Part No.	Description	Qty	Options
	6732-61-3503	SUPPORT ASS'Y	1	SN:30380718--
1	☆	· SUPPORT	1	SN:30380718--
2	6732-61-3533	· SHAFT	1	SN:30380718--
3	06347-06207	· BEARING	1	SN:30380718--
4	06330-06205	· BEARING	1	SN:30380718--
5	6162-63-1440	· RING {SNAP}	1	SN:30380718--
6	6732-61-3542	· BOSS	1	SN:30380718--
7	07046-22216	· PLUG	1	SN:30380718--
8	6732-61-3750	PULLEY	1	SN:30380718--
9	6732-61-3170	BOLT	2	SN:30380718--
10	6732-62-3220	BOLT	2	SN:30380718--

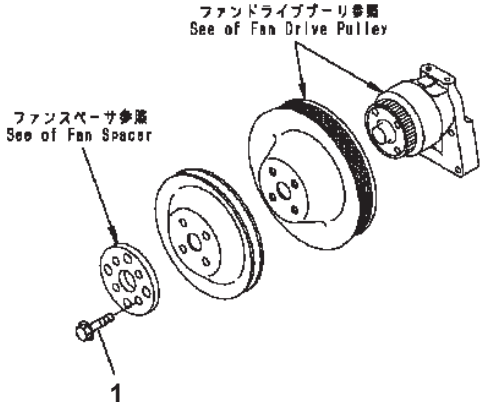

00000190

COOLING FAN BOLT

Item	Part No.	Description	Qty	Options
1	6735-71-3220	BOLT	4	SN:30380718--

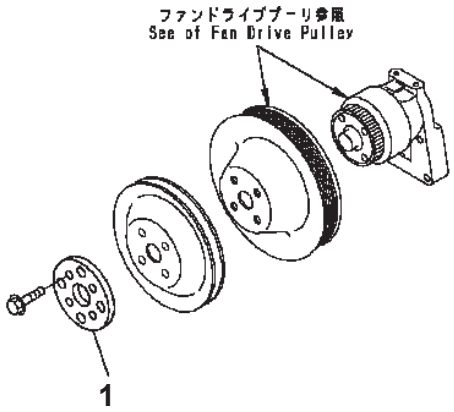

00000193

FAN PILOT SPACER

Item	Part No.	Description	Qty	Options
1	6732-61-3160	SPACER	1	SN:30380718--

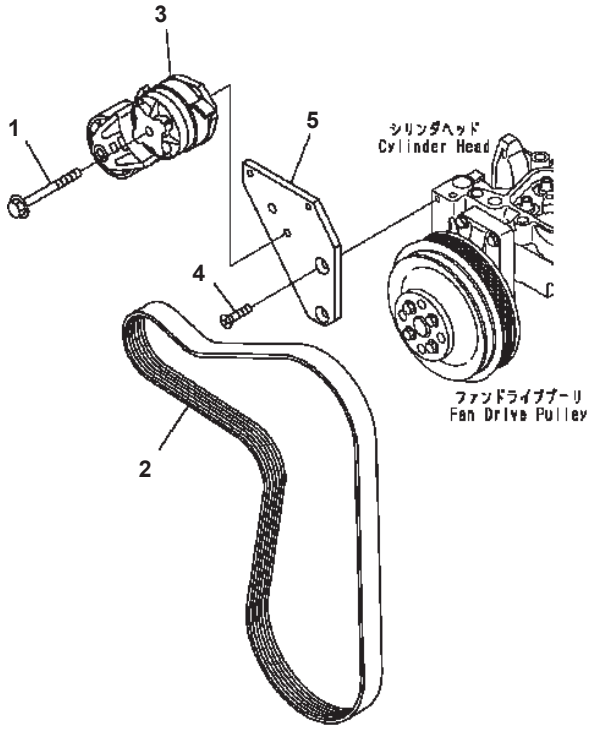

SAA6D102E-2 S/N 30380718-UP

BELT TENSIONER (FOR 35A¤ 60 ALTERNATOR)

Item	Part No.	Description	Qty	Options
1	6732-61-4120	BOLT	1	SN:30380718--
2	6738-62-4110	BELT	1	SN:30380718--
3	6736-61-4150	TENSIONER {BELT}	1	SN:30380718--
4	6732-61-4220	SCREW	2	SN:30380718--
5	6738-61-3911	PLATE	1	SN:30380718--

Ref. A601S-01F3 Page 030650

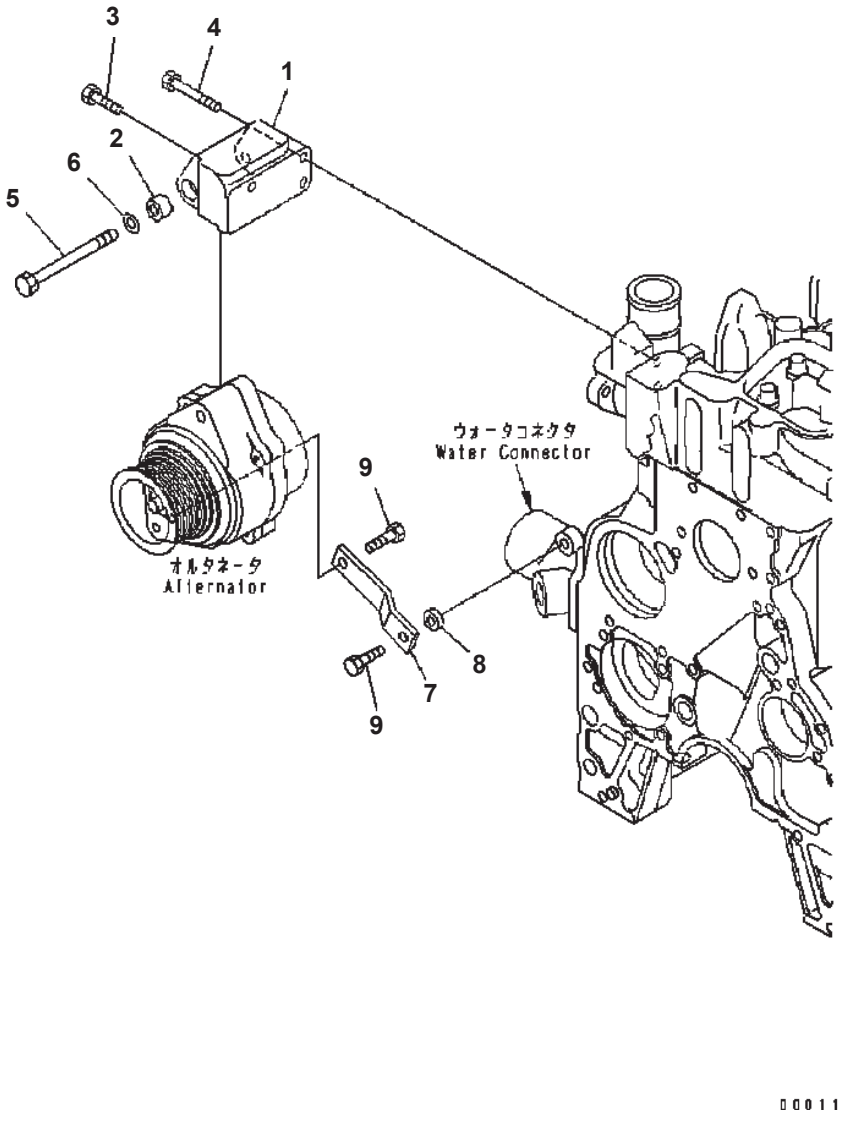

SAA6D102E-2 S/N 30380718-UP

ALTERNATOR MOUNTING (FOR 35A¤ 60A ALTERNATOR)

Item	Part No.	Description	Qty	Options
	6754-81-6110	SUPPORT ASS'Y	1	SN:30384149--
	6732-81-6611	SUPPORT ASS'Y	1	SN:30380718--30384148
1	6754-81-6120	· SUPPORT, ALTERNATOR	1	SN:30384149--
	6732-81-6641	· SUPPORT, ALTERNATOR	1	SN:30380718--30384148
2	6732-81-6630	· SPACER, MOUNTING	1	SN:30380718--
3	6732-21-5160	BOLT	1	SN:30380718--
4	6736-21-3210	BOLT	2	SN:30380718--
5	01435-01090	BOLT	1	SN:30380718--
6	01641-01016	WASHER	1	SN:30380718--
7	6732-81-6560	PLATE, ALTERNATOR	1	SN:30380718--
8	6732-81-6690	SPACER, MOUNTING	1	SN:30380718--
9	6732-21-6630	BOLT	2	SN:30380718--

Ref. A601T-01B1 Page 030660

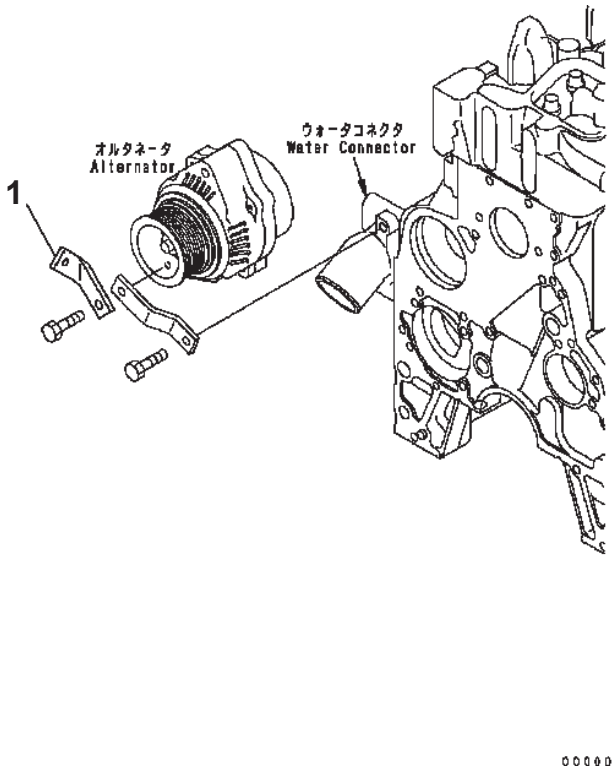

BELT GUARD

Item	Part No.	Description	Qty	Options
1	6738-81-6120	PLATE	1	SN:30380718--

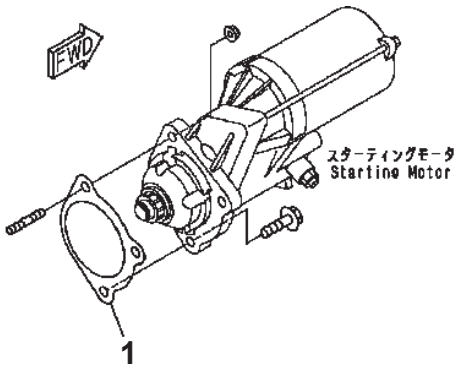

PJD4445

STARTING MOTOR MOUNTING (5.5KM)

Item	Part No.	Description	Qty	Options
1	6735-81-6180	GASKET (K2)	1	SN:36013233--

リペア パーツ
REPAIR PARTS 詳細については次のページを参照して下さい。
See subsequent pages for details.

PWD0861

SAA6D102E-2 S/N 30380718-UP

REPAIR PARTS (1/4) (CYLINDER HEAD)

Item	Part No.	Description	Qty	Options
1	6736-19-1310	GUIDE¤ 60.50MM	6	SN:30380718--
2	6736-19-1410	GUIDE¤ 51.75MM	6	SN:30380718--
3	6736-18-1310	GUIDE	12	SN:30380718--
		OVERSIZE PARTS		
4	6735-11-1870	GASKET¤ 0.25MM	1	SN:30380718--
	6735-11-1840	GASKET¤ 0.50MM	1	SN:30380718--

Ref. A8110-01A9 Page 030690

リペア パーツ
REPAIR PARTS

詳細については次のページを参照して下さい。
See subsequent pages for details.

PNDQ0861

SAA6D102E-2 S/N 30380718-UP

REPAIR PARTS (2/4) (CYLINDER BLOCK)

Item	Part No.	Description	Qty	Options
		OVERSIZE PARTS		
1	6736-29-1410	BUSHING {CAM¤ NO.1}	1	SN:30380718--
2	6736-29-1420	BUSHING {CAM¤ NO. 2¤3¤4¤5¤6¤7}	1	SN:30380718--
3	6736-29-2110	LINER {SALVAGE}	6	SN:30380718--

Ref. A8110-02A9 Page 030700

リペア パーツ
REPAIR PARTS

詳細については次のページを参照して下さい。
See subsequent pages for details.

PWD0861

REPAIR PARTS (3/4) (CRANKSHAFT)

Item	Part No.	Description	Qty	Options
1	6736-39-1220	SLEEVE {WEAR}	1	SN:30380718--
2	6736-39-1130	SLEEVE {WET}	1	SN:30380718--
	6735-29-8100	MAIN METAL ASS'Y	6	SN:30380718--
3	☆	・ METAL {UPPER}	1	SN:30380718--
4	☆	・ METAL {LOWER}	1	SN:30380718--
	6735-28-8100	MAIN METAL ASS'Y	6	SN:30380718--
3	☆	・ METAL {UPPER}	1	SN:30380718--
4	☆	・ METAL {LOWER}	1	SN:30380718--
	6735-27-8100	MAIN METAL ASS'Y	6	SN:30380718--
3	☆	・ METAL {UPPER}	1	SN:30380718--
4	☆	・ METAL {LOWER}	1	SN:30380718--
	6735-26-8100	MAIN METAL ASS'Y	6	SN:30380718--
3	☆	・ METAL {UPPER}	1	SN:30380718--
4	☆	・ METAL {LOWER}	1	SN:30380718--
	6736-29-8610	THRUST METAL ASS'Y	1	SN:30380718--
5	☆	・ METAL {THRUST}	1	SN:30380718--
6	☆	・ METAL {LOWER}	1	SN:30380718--
	6735-28-8200	THRUST METAL ASS'Y	1	SN:30380718--
5	☆	・ METAL {THRUST}	1	SN:30380718--
6	☆	・ METAL {LOWER}	1	SN:30380718--
	6736-28-8620	THRUST METAL ASS'Y	1	SN:30380718--
5	☆	・ METAL {THRUST}	1	SN:30380718--
6	☆	・ METAL {LOWER}	1	SN:30380718--
	6736-27-8620	THRUST METAL ASS'Y	1	SN:30380718--
5	☆	・ METAL {THRUST}	1	SN:30380718--
6	☆	・ METAL {LOWER}	1	SN:30380718--
	6736-29-8700	THRUST METAL ASS'Y	1	SN:30380718--
5	☆	・ METAL {THRUST 0.5MM/0.5MM}	1	SN:30380718--
6	☆	・ METAL {LOWER}	1	SN:30380718--
	6736-28-8700	THRUST METAL ASS'Y	1	SN:30380718--
5	☆	・ METAL {THRUST 1.0MM/1.0MM}	1	SN:30380718--
6	☆	・ METAL {LOWER}	1	SN:30380718--

リペア パーツ
REPAIR PARTS

詳細については次のページを参照して下さい。
See subsequent pages for details.

PWDOB61

REPAIR PARTS (4/4) (PISTON)

Item	Part No.	Description	Qty	Options
		OVERSIZE PARTS		
1	6736-39-3400	METAL¤ 0.25MM	12	SN:30380718--
	6736-38-3400	METAL¤ 0.50MM	12	SN:30380718--
	6736-37-3400	METAL¤ 0.75MM	12	SN:30380718--
	6736-36-3400	METAL¤ 1.00MM	12	SN:30380718--
		OVERSIZE 0.5MM		
	6738-39-2031	PISTON RING ASS'Y	6	SN:30380718--
2	☆	· RING {TOP}	1	SN:30380718--
	6738-38-2031	PISTON RING ASS'Y	6	SN:30380718--
2	☆	· RING {TOP}	1	SN:30380718--
3	☆	· RING {SECOND}	1	SN:30380718--
	☆	· RING {SECOND}	1	SN:30380718--
4	☆	· RING {OIL}	1	SN:30380718--
		OVERSIZE 1.0MM		
4	☆	· RING {OIL}	1	SN:30380718--
		OVERSIZE PARTS		
5	☆	PISTON¤ 0.5MM	6	SN:30380718--
6	6738-38-2111	PISTON¤ 1.0MM	6	SN:30380718--

KIT 詳細については次のページを参照して下さい。
See subsequent pages for details.

K-1 6738-K1-1201 シリンダ ヘッド ガスケット キット
CYLINDER HEAD GASKET KIT

このガスケットキットは，キット区分ごとの基本セットです。
部品明細書中、キットの記号が付いていない消耗部品は、お手数ですが単品にて手配下さい。

This kit basis to the gasket kit.
Thers not kit mark parts articles of consumption single order.

00009799

SAA6D102E-2 S/N 30380718-UP

CYLINDER HEAD GASKET KIT

Item	Part No.	Description	Qty	Options
1	6738-K1-1201	GASKET KIT {CYLINDER HEAD}	1	SN:30380718--
	6732-11-4811	· GASKET {AIR INTAKE HEATER}	2	SN:30380718--
	07005-01212	· GASKET {AIR TUBE}	2	SN:30380718--
	07005-01012	· GASKET {AIR TUBE}	2	SN:30380718--
	07005-01212	· GASKET {FUEL TUBE (FILTER)	4	SN:30380718--
	07005-01412	· GASKET {FUEL TUBE (INJECTION PUMP)	8	SN:30380718--
	6732-71-6260	· GASKET {INJECTOR - SPILL}	12	SN:30380718--
	6738-11-4370	· O-RING {TURBOCHARGER CONNECTOR}	1	SN:30380718--
	6735-11-4812	· GASKET {INTAKE MANIFOLD COVER}	1	SN:30380718--
	6732-11-3850	· SEAL {INJECTOR}	6	SN:30380718--
	6736-11-3420	· SEAL {INJECTOR SHIM}	6	SN:30380718--
	6732-81-8830	· GASKET {TURBOCHARGER GASKET}	1	SN:30380718--
	6732-41-4540	· SEAL {VALVE STEM}	12	SN:30380718--
	6735-11-1821	· GASKET {CYLINDER HEAD}	1	SN:30380718--
	6736-11-5820	· GASKET {EXHAUST MANIFOLD}	6	SN:30380718--
	6732-61-6250	· SEAL {THERMOSTAT}	1	SN:30380718--
	6732-61-6240	· GASKET {THERMOSTAT}	1	SN:30380718--
	6207-51-7690	· GASKET {TURBOCHARGER OIL DRAIN}	1	SN:30380718--
	6736-51-8710	· O-RING {TURBOCHARGER OIL SUPPLY NIPPLE}	2	SN:30380718--
	6732-81-8860	· O-RING {TURBOCHARGER OIL SUPPLY TUBE}	1	SN:30380718--
	6732-11-8181	· GASKET {HEAD COVER}	6	SN:30380718--
	6732-11-8210	· GASKET {CAMFOLLOWER COVER BOLT}	6	SN:30380718--
	6732-81-8220	· CLAMP {TURBOCHARGER OUTLET PIPE}	1	SN:30380718--

Ref. A8128-01A1 Page 030730

KIT 詳細については次のページを参照して下さい。
See subsequent pages for details.

K-2 6738-K2-1201 シリンダ ブロック ガスケット キット
CYLINDER BLOCK GASKET KIT

このガスケットキットは、キット区分ごとの基本セットです。
部品明細書中、キットの記号が付いていない消耗部品は、お手数ですが単品にて手配下さい。

This kit basis to the gasket kit.
Thers not kit mark parts articles of consumption single order.

00009800

SAA6D102E-2 S/N 30380718-UP

CYLINDER BLOCK GASKET KIT

Item	Part No.	Description	Qty	Options
2	6738-K2-1201	GASKET KIT {CYLINDER BLOCK}	1	SN:30380718--
	6735-21-1960	· O-RING {SPEED SENSOR}	1	SN:30380718--
	6215-81-9710	· O-RING {M10 PLUG}	3	SN:30380718--
	6735-21-1930	· O-RING {M14 PLUG}	1	SN:30380718--
	6731-21-1190	· NOZZLE {COOLING NOZZLE}	6	SN:30380718--
	6732-21-3811	· GASKET {GEAR CASE}	1	SN:30380718--
	6732-21-3870	· O-RING {GEAR CASE}	1	SN:30380718--
	6732-21-3880	· GASKET {GEAR HOUSING}	1	SN:30380718--
	6731-21-4220	· SEAL {FRONT SEAL KIT}	1	SN:30380718--
	6736-21-3450	· GASKET {FRONT COVER}	1	SN:30380718--
	6732-11-8210	· GASKET {PUSH ROD COVER BOLT}	6	SN:30380718--
	6738-21-6180	· O-RING {PUSH ROD COVER}	1	SN:30380718--
	6738-21-6650	· GASKET {PUSH ROD COVER}	1	SN:30380718--
	6738-21-6660	· GASKET {PUSH ROD COVER BOLT}	8	SN:30380718--
	07000-72110	· O-RING {PTO COVER}	1	SN:30380718--
	6732-21-3220	· SEAL {FRONT COVER}	1	SN:30380718--
	6735-21-4191	· GASKET {REAR COVER}	1	SN:30380718--
	6735-K1-3001	· SEAL {REAR SEAL KIT (SINGLE)}	1	SN:30380718--
	6732-21-4171	· GASKET {REAR COVER}	1	SN:30380718--
	6732-21-4161	· O-RING {BEARING CAP}	1	SN:30380718--
	07005-01012	· GASKET {INJECTION PUMP OIL PIPING}	7	SN:30380718--
	6735-61-6411	· GASKET	1	SN:30380718--
	6732-51-4420	· O-RING {OIL PRESSURE PLUG}	1	SN:30380718--
	6732-51-4432	· GASKET {OIL PRESSURE PLUG}	1	SN:30380718--
	6732-61-2311	· GASKET {OIL COOLER CORE}	1	SN:30380718--
	6733-21-5520	· GASKET {SUCTION TUBE}	1	SN:30380718--
	07005-02216	· GASKET {OIL PAN DRAIN}	2	SN:30380718--
	6732-81-6811	· GASKET {STARTER}	1	SN:30380718--
	6731-51-8150	· O-RING {TURBOCHARGER DRAIN}	1	SN:30380718--
	6732-61-6130	· SEAL {WATER INLET CONNECTION}	1	SN:30380718--
	6736-61-1520	· SEAL {WATER PUMP}	1	SN:30380718--
	6136-21-5870	· GASKET {OIL LEVEL SENSOR}	1	SN:30380718--
	6736-21-3360	· SEAL {OIL FILTER}	1	SN:30380718--

Ref. A8128-02A1 Page 030740

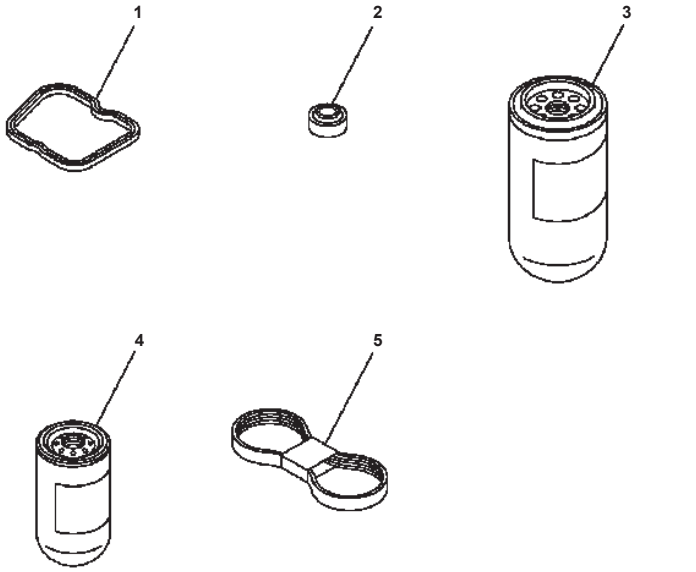

SAA6D102E-2 S/N 30380718-UP

SPARE PARTS

Item	Part No.	Description	Qty	Options
1	6732-11-8181	GASKET	6	SN:30380718--
2	6732-11-8210	GASKET	6	SN:30380718--
3	6736-51-5142	CARTRIDGE	1	SN:30380718--
4	6732-71-6112	CARTRIDGE {FUEL}	1	SN:30380718--
5	6732-81-6170	BELT	1	SN:30380718--

Ref. B9999-01R0 Page 030750

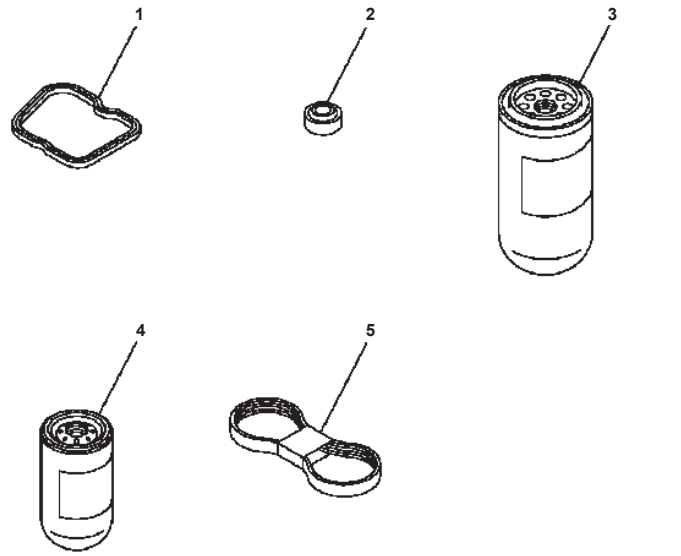

SAA6D102E-2 S/N 30380718-UP

SPARE PARTS (FOR 35A¤ 60A ALTERNATOR)

Item	Part No.	Description	Qty	Options
1	6732-11-8181	GASKET	6	SN:30380718--
2	6732-11-8210	GASKET	6	SN:30380718--
3	6736-51-5142	CARTRIDGE	1	SN:30380718--
4	6732-71-6112	CARTRIDGE {FUEL}	1	SN:30380718--
5	6734-81-6410	BELT	1	SN:30380718--

Ref. B9999-01T5 Page 030760

ENGINE RELATED PARTS

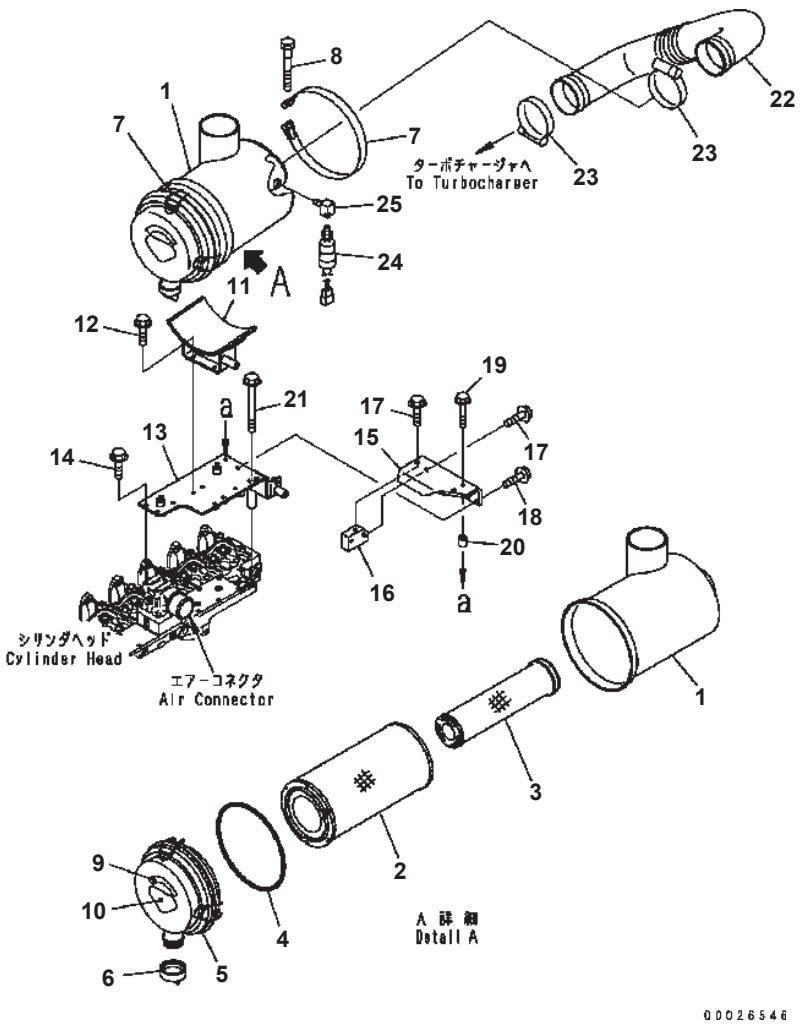

AIR CLEANER

Item	Part No.	Description	Qty	Options
	6738-81-7400	AIR CLEANER ASS'Y	1	SN:B10001--
1	6738-81-7410	・ BODY	1	SN:B10001--
	600-185-3100	・ ELEMENT ASS'Y	1	SN:B10001--
2	600-185-3110	・・ ELEMENT {OUTER}	1	SN:B10001--
3	☆	・・ ELEMENT {INNER}	1	SN:B10001--
4	600-184-1370	・・ O-RING	1	SN:B10001--
5	600-184-1310	・ COVER ASS'Y	1	SN:B10001--
	600-184-2810	・・ PLATE	1	SN:B10001--
6	600-184-1350	・ VALVE	1	SN:B10001--
7	6131-11-4520	BAND ASS'Y	2	SN:B10001--
8	6643-11-4641	BOLT	2	SN:B10001--
9	600-181-1930	PLATE¤ INSTRUCTION	1	SN:B10001--
10	600-184-2810	PLATE	1	SN:B10001--
11	6738-11-9111	BRACKET	1	SN:B10001--
12	01435-00820	BOLT	4	SN:B10001--
13	6738-11-9121	BRACKET	1	SN:B10001--
14	01435-00820	BOLT	4	SN:B10001--
15	6738-11-5640	BRACKET	1	SN:B10001--
16	6738-11-5650	PLATE	1	SN:B10001--
17	01435-01025	BOLT	2	SN:B10001--
18	01435-00825	BOLT	2	SN:B10001--
19	01435-00845	BOLT	2	SN:B10001--
20	207-54-15180	SPACER	2	SN:B10001--
21	01436-01205	BOLT	2	SN:B10001--
22	6738-11-4440	HOSE	1	SN:B10001--
23	07299-00105	CLAMP	2	SN:B10001--
24	600-815-8860	INDICATOR	1	SN:B10001--
25	6685-81-4920	ELBOW	1	SN:B10001--

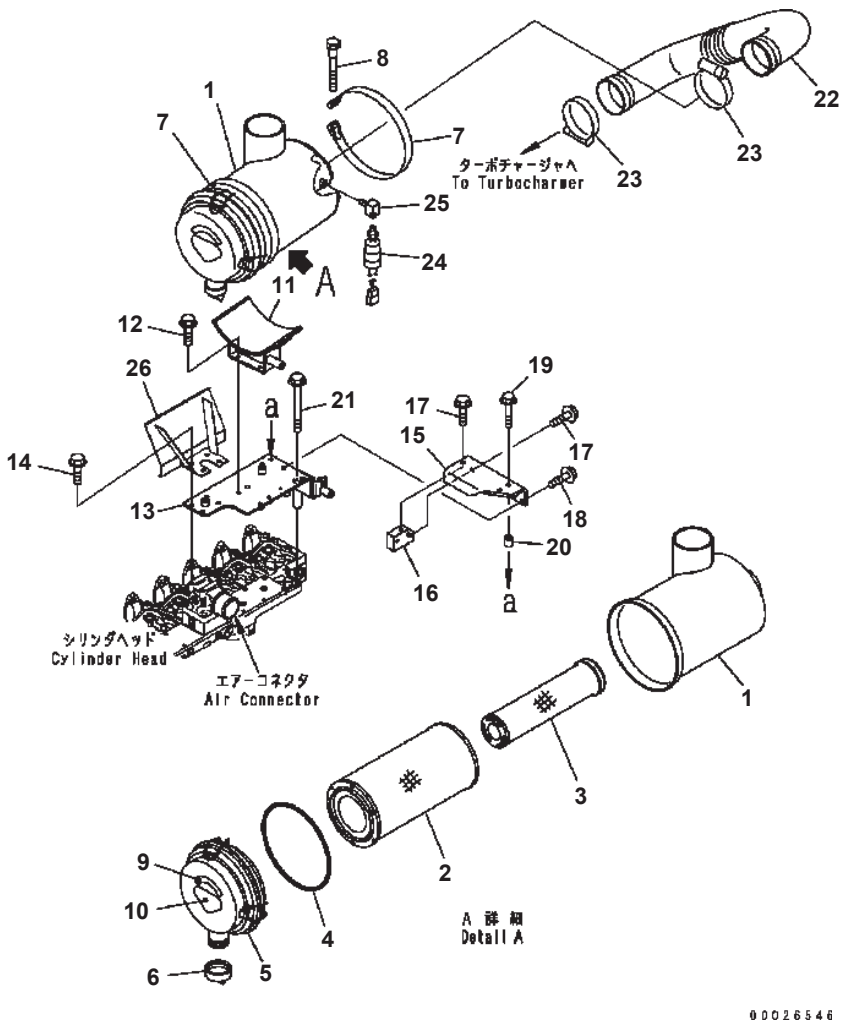

AIR CLEANER (WITH DEFLECTOR BRACKET) (FOR SUGAR CANE) (#B10235-)

Item	Part No.	Description	Qty	Options
	6738-81-7400	AIR CLEANER ASS'Y	1	SN:B10235--
1	6738-81-7410	・ BODY	1	SN:B10235--
	600-185-3100	・ ELEMENT ASS'Y	1	SN:B10235--
2	600-185-3110	・・ ELEMENT {OUTER}	1	SN:B10235--
3	☆	・・ ELEMENT {INNER}	1	SN:B10235--
4	600-184-1370	・・ O-RING	1	SN:B10235--
5	600-184-1310	・ COVER ASS'Y	1	SN:B10235--
	600-184-2810	・・ PLATE	1	SN:B10235--
6	600-184-1350	・ VALVE	1	SN:B10235--
7	6131-11-4520	BAND ASS'Y	2	SN:B10235--
8	6643-11-4641	BOLT	2	SN:B10235--
9	600-181-1930	PLATE¤ INSTRUCTION	1	SN:B10235--
10	600-184-2810	PLATE	1	SN:B10235--
11	6738-11-9111	BRACKET	1	SN:B10235--
12	01435-00820	BOLT	4	SN:B10235--
13	6738-11-9121	BRACKET	1	SN:B10235--
14	01435-00820	BOLT	4	SN:B10235--
15	6738-11-5640	BRACKET	1	SN:B10235--
16	6738-11-5650	PLATE	1	SN:B10235--
17	01435-01025	BOLT	2	SN:B10235--
18	01435-00825	BOLT	2	SN:B10235--
19	01435-00845	BOLT	2	SN:B10235--
20	207-54-15180	SPACER	2	SN:B10235--
21	01436-01205	BOLT	2	SN:B10235--
22	6738-11-4440	HOSE	1	SN:B10235--
23	07299-00105	CLAMP	2	SN:B10235--
24	600-815-8860	INDICATOR	1	SN:B10235--
25	6685-81-4920	ELBOW	1	SN:B10235--
26	419-11-B1110	PLATE	1	SN:B10235--

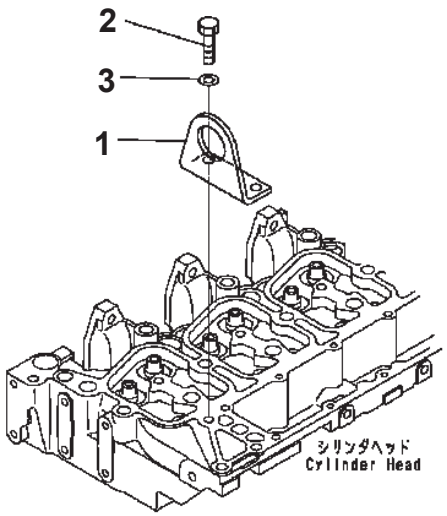

PJD1573

FRONT HANGER (#B10001-B10012)

Item	Part No.	Description	Qty	Options
1	6732-11-1970	BRACKET	1	SN:B10001--B10012
2	01010-81025	BOLT	2	SN:B10001--B10012
3	01643-31032	WASHER	2	SN:B10001--B10012

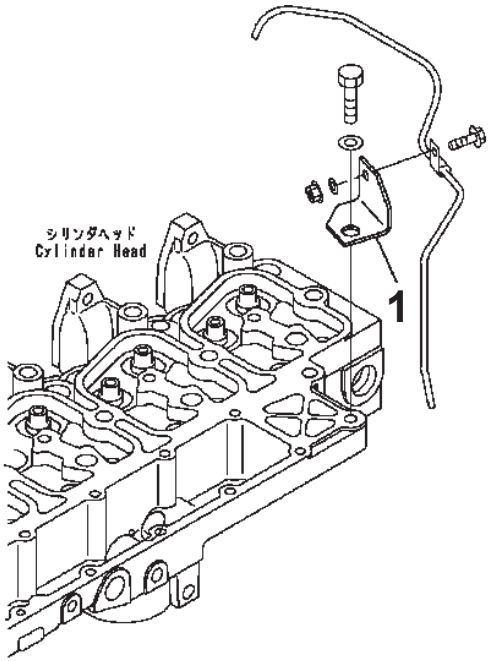

00023222

FUEL RETURN RELATED PARTS

Item	Part No.	Description	Qty	Options
1	6738-71-5530	BRACKET	1	SN:B10001--

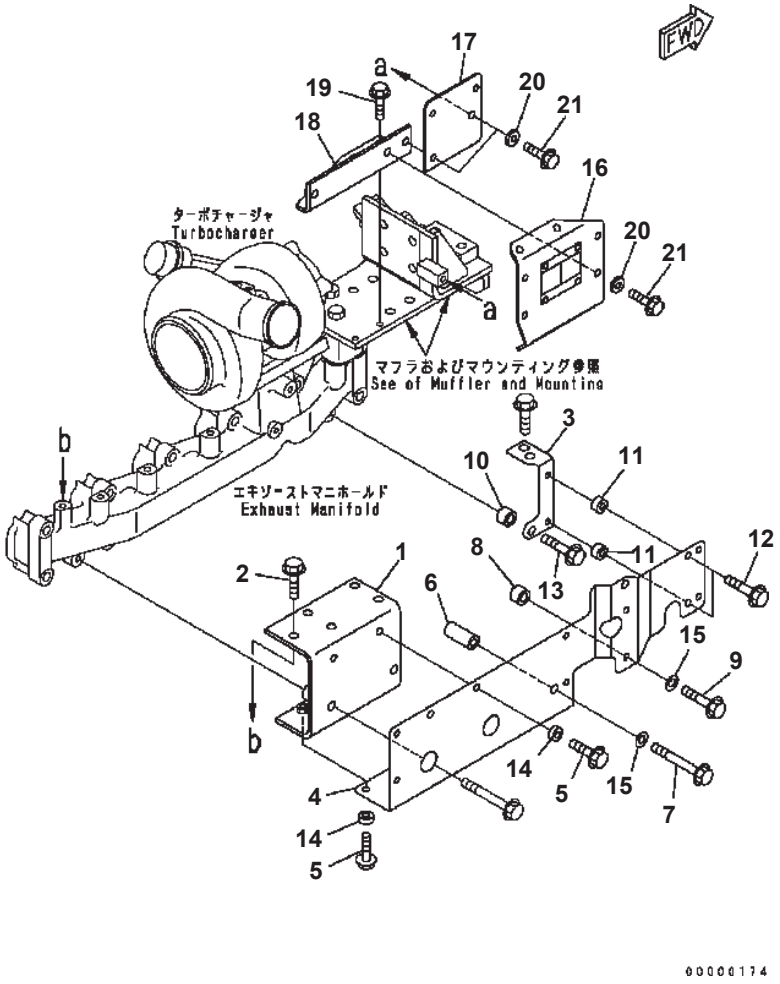

HEAT SHIELD

Item	Part No.	Description	Qty	Options
1	6738-81-8470	BRACKET	1	SN:B10001--
2	01435-01020	BOLT	1	SN:B10001--
3	6735-81-8710	BRACKET	1	SN:B10001--
4	6735-81-8130	COVER	1	SN:B10001--
5	01435-00820	BOLT	4	SN:B10001--
6	6134-11-5120	SPACER	1	SN:B10001--
7	01435-01065	BOLT	1	SN:B10001--
8	6206-11-4590	SPACER	1	SN:B10001--
9	01435-01030	BOLT	1	SN:B10001--
10	6206-11-4590	SPACER	1	SN:B10001--
11	6204-81-6740	SPACER	2	SN:B10001--
12	01435-00830	BOLT	2	SN:B10001--
13	01435-01040	BOLT	1	SN:B10001--
14	154-61-16570	WASHER	6	SN:B10001--
15	01643-31032	WASHER	2	SN:B10001--
16	6737-81-8241	COVER	1	SN:B10001--
17	6738-81-8511	COVER	1	SN:B10001--
18	6738-81-8461	BRACKET	1	SN:B10001--
19	01435-00816	BOLT	2	SN:B10001--
20	154-61-16570	WASHER	4	SN:B10001--
21	01435-00820	BOLT	4	SN:B10001--

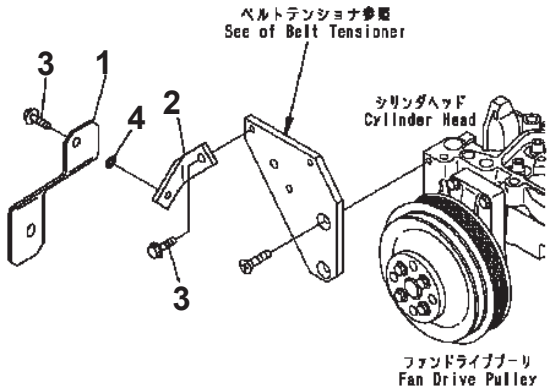

00000192

ALTERNATOR COVER (FOR 60A ALTERNATOR)

Item	Part No.	Description	Qty	Options
1	6738-81-6110	COVER	1	SN:B10001--
2	6738-81-6130	PLATE	1	SN:B10001--
3	01435-00812	BOLT	3	SN:B10001--
4	01640-20816	WASHER	2	SN:B10001--

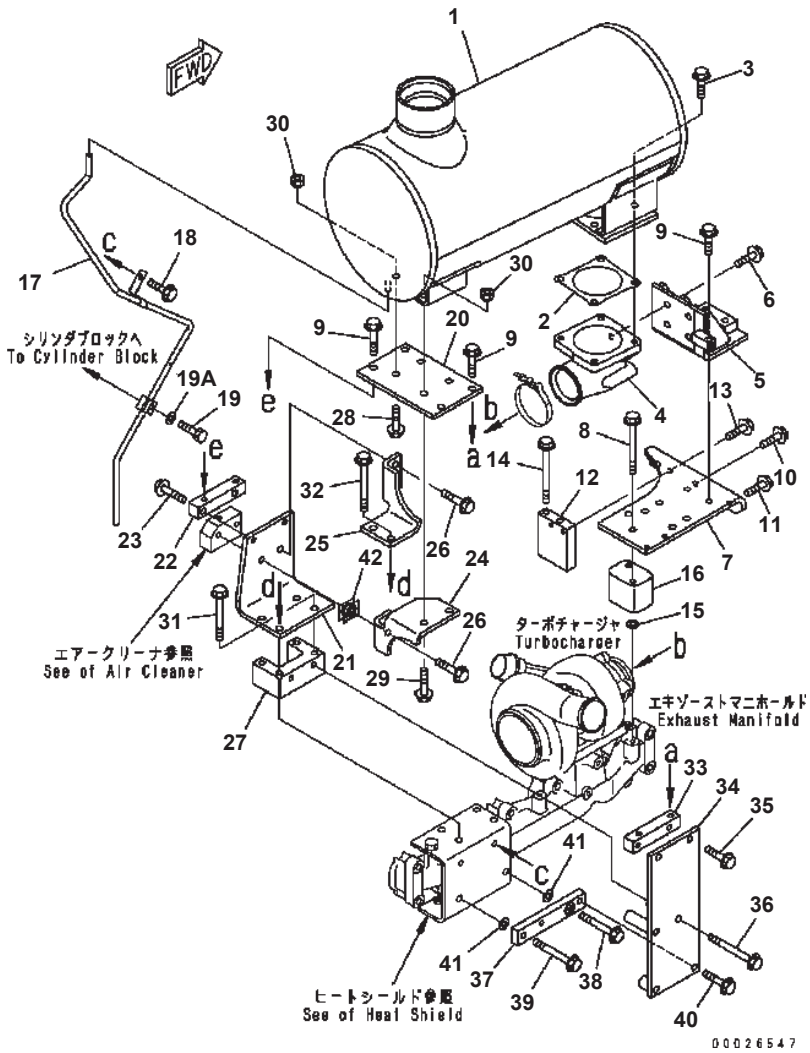

MUFFLER AND MOUNTING

Item	Part No.	Description	Qty	Options
1	6738-11-5542	MUFFLER	1	SN:B10001--
2	6150-11-5710	GASKET	1	SN:B10001--
3	01435-01025	BOLT	4	SN:B10001--
4	6738-11-5611	ELBOW	1	SN:B10001--
5	6738-11-5621	BRACKET	1	SN:B10001--
6	01435-01020	BOLT	4	SN:B10001--
7	6738-11-5342	BRACKET	1	SN:B10001--
8	01435-01085	BOLT	2	SN:B10001--
9	01435-01025	BOLT	6	SN:B10001--
10	01435-00820	BOLT	1	SN:B10001--
11	01435-00830	BOLT	1	SN:B10001--
12	6738-11-5440	SPACER	1	SN:B10001--
13	01435-00825	BOLT	2	SN:B10001--
14	6202-81-6821	BOLT	2	SN:B10001--
15	209-62-11810	SPACER	1	SN:B10001--
16	6738-11-5360	SPACER	1	SN:B10001--
17	6738-11-5411	TUBE	1	SN:B10001--
18	01435-00820	BOLT	1	SN:B10001--
19	01010-81225	BOLT	1	SN:B10001--
19A	01643-31232	WASHER	1	SN:B10001--
20	6738-11-5450	PLATE	1	SN:B10001--
21	6738-11-5460	PLATE	1	SN:B10001--
22	6738-11-5630	BLOCK	1	SN:B10001--
23	01435-01035	BOLT	2	SN:B10001--
24	6738-11-5470	PLATE	1	SN:B10001--
25	6738-11-5480	PLATE	1	SN:B10001--
26	01435-01040	BOLT	2	SN:B10001--
27	6738-11-5371	SPACER	1	SN:B10001--
28	01435-01025	BOLT	2	SN:B10001--
29	01435-01035	BOLT	2	SN:B10001--
30	01580-01008	NUT	4	SN:B10001--
31	01435-01070	BOLT	2	SN:B10001--
32	01435-01080	BOLT	2	SN:B10001--
33	6738-11-5660	BLOCK	1	SN:B10001--
34	6738-11-5670	PLATE	1	SN:B10001--
35	01435-01030	BOLT	2	SN:B10001--
36	01435-01085	BOLT	2	SN:B10001--
37	6738-11-5680	PLATE	1	SN:B10001--
38	01435-01080	BOLT	1	SN:B10001--
39	01435-01085	BOLT	1	SN:B10001--

WA320-5 S/N B10001-UP

MUFFLER AND MOUNTING

Item	Part No.	Description	Qty	Options
40	01435-01050	BOLT	2	SN:B10001--
41	01643-31032	WASHER	2	SN:B10001--
42	419-54-B4110	SHIM	6	SN:B10001--

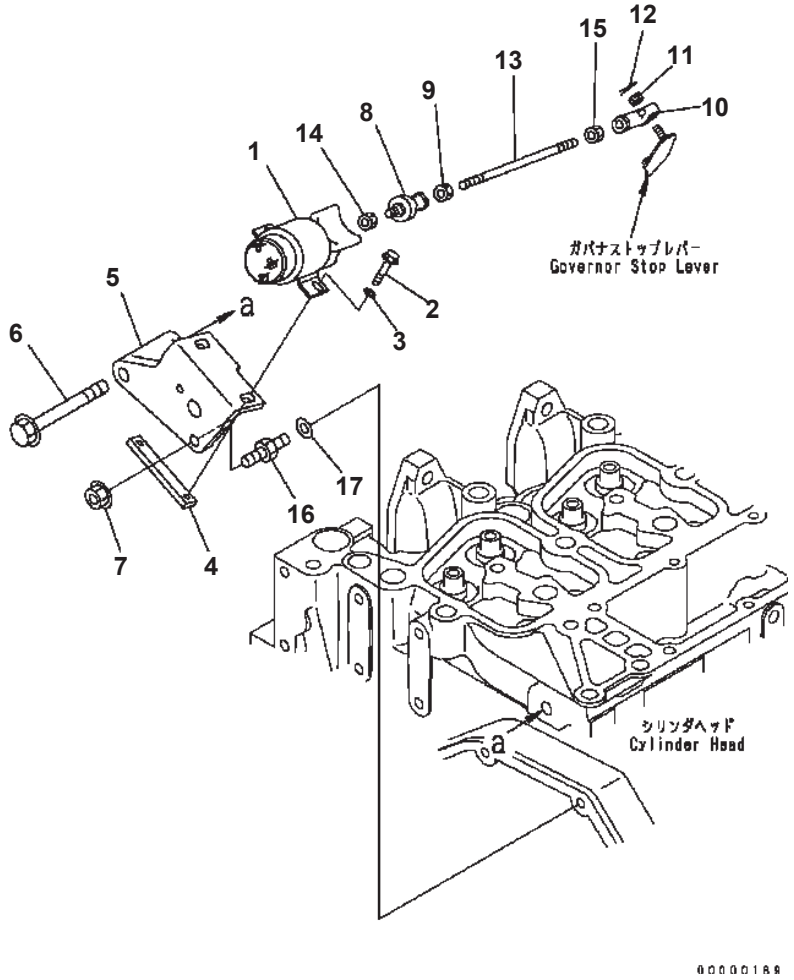

STOP SOLENOID

Item	Part No.	Description	Qty	Options
1	600-815-9260	SOLENOID ASS'Y	1	SN:B10001--
2	01435-00620	BOLT	2	SN:B10001--
3	01640-20610	WASHER	2	SN:B10001--
4	6732-81-9520	PLATE	1	SN:B10001--
5	6732-81-9511	BRACKET	1	SN:B10001--
6	01435-01070	BOLT	2	SN:B10001--
7	01584-00806	NUT	1	SN:B10001--
8	6204-81-9640	JOINT	1	SN:B10001--
9	01580-00605	NUT	1	SN:B10001--
10	04250-60639	END {ROD}	1	SN:B10001--
11	01590-10607	NUT	1	SN:B10001--
12	04050-11212	PIN {COTTER}	1	SN:B10001--
13	04248-50625	ROD	1	SN:B10001--
14	01580-00605	NUT	1	SN:B10001--
15	01508-40603	NUT {L.H. THREAD}	1	SN:B10001--
16	6732-21-3990	STUD	1	SN:B10001--
17	01640-20816	WASHER	1	SN:B10001--

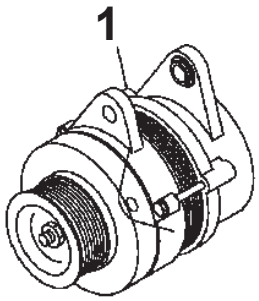

PW35778

ALTERNATOR (60A)

Item	Part No.	Description	Qty	Options
1	(600-861-6420)	ALTERNATOR A. (60A) (SEE FIG.B0000-09A0)	1	SN:B10001--

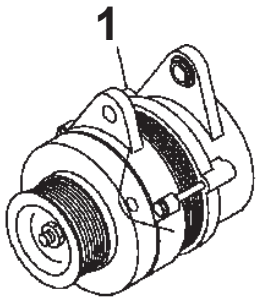

PW35778

ALTERNATOR (35A)

Item	Part No.	Description	Qty	Options
1	(600-861-3420)	ALTERNATOR A. (35A) (SEE FIG.B0000-09A1)	1	SN:B10001--

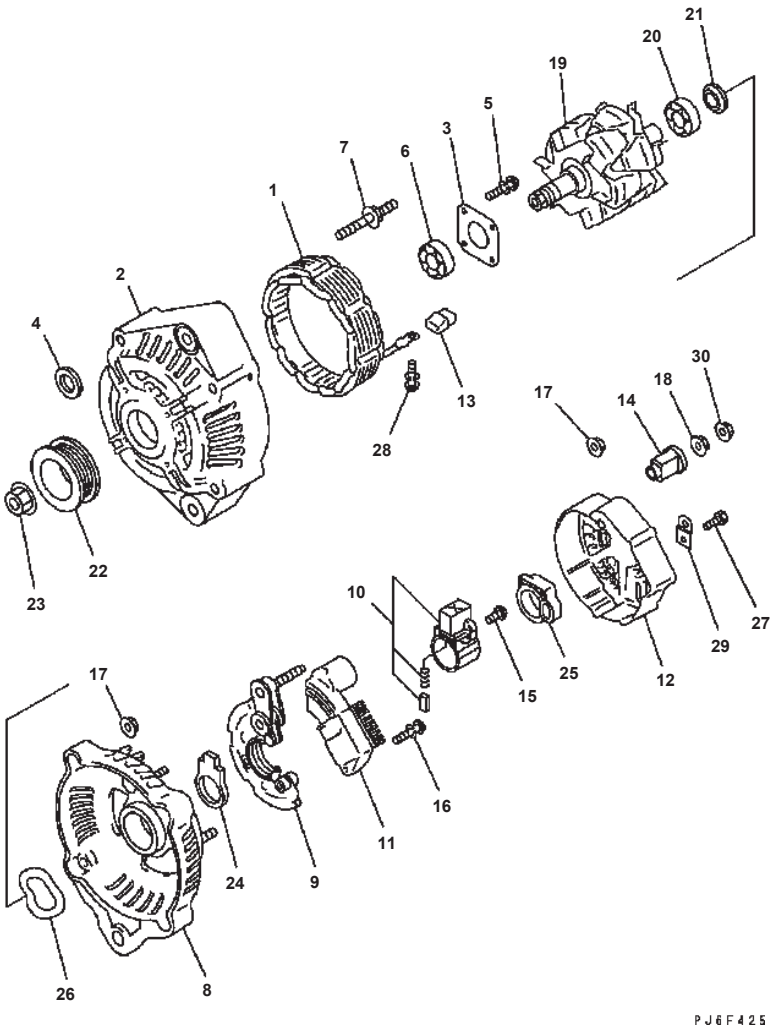

ALTERNATOR (60A) (INNER PARTS)

Item	Part No.	Description	Qty	Options
	600-861-6420	ALTERNATOR A. (60A)	1	SN:B10001--
	ND121400-0800	· FRAME ASS'Y	1	SN:B10001--
1	ND021100-4210	· · STATOR ASS'Y	1	SN:B10001--
2	ND021401-4980	· · FRAME	1	SN:B10001--
3	ND021411-0570	· · PLATE	1	SN:B10001--
4	ND021045-0530	· · COLLAR	1	SN:B10001--
5	ND949006-5590	· · SCREW	4	SN:B10001--
6	ND949100-5010	· · BEARING {BALL}	1	SN:B10001--
7	ND949043-2000	· · BOLT {STUD}	4	SN:B10001--
8	ND021501-8050	· FRAME {REAR}	1	SN:B10001--
9	ND021580-4820	· HOLDER	1	SN:B10001--
10	ND021620-2720	· BRUSH HOLDER ASS'Y	1	SN:B10001--
11	ND126000-2320	· REGULATOR ASS'Y	1	SN:B10001--
12	ND021551-2480	· COVER	1	SN:B10001--
13	ND021605-1970	· BUSHING	4	SN:B10001--
14	ND021605-2481	· BUSHING	1	SN:B10001--
15	ND949006-5460	· SCREW	3	SN:B10001--
16	ND91310-04251	· SCREW	2	SN:B10001--
	ND949007-5110	· SCREW	2	SN:B10001--
17	ND949056-2481	· NUT	7	SN:B10001--
18	ND949056-3080	· NUT	1	SN:B10001--
19	ND021200-8380	· ROTOR ASS'Y	1	SN:B10001--
20	ND949100-2790	· · BEARING {BALL}	1	SN:B10001--
21	ND021506-0070	· · COVER	1	SN:B10001--
22	ND021041-8620	· PULLEY	1	SN:B10001--
23	ND949056-2520	· NUT	1	SN:B10001--
24	ND021626-0190	· SEAL	1	SN:B10001--
25	ND021626-0250	· SEAL	1	SN:B10001--
26	ND021542-0160	· WASHER	1	SN:B10001--
27	ND949006-6401	· SCREW	1	SN:B10001--
28	ND949007-6280	· SCREW	4	SN:B10001--
29	ND021602-5230	· PLATE	1	SN:B10001--
30	ND92150-06061	· NUT	1	SN:B10001--

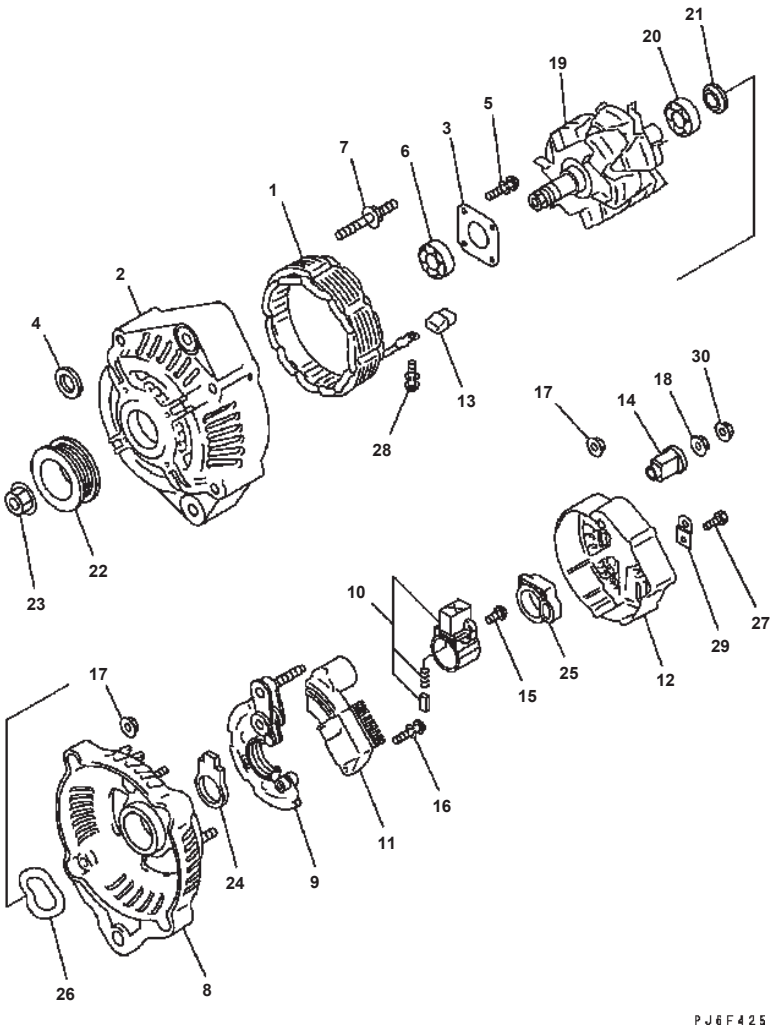

ALTERNATOR (35A) (INNER PARTS)

Item	Part No.	Description	Qty	Options
	600-861-3420	ALTERNATOR A. (35A)	1	SN:B10001--
	ND121400-0800	· FRAME ASS'Y	1	SN:B10001--
1	ND021100-4210	· · STATOR ASS'Y	1	SN:B10001--
2	ND021401-4980	· · FRAME	1	SN:B10001--
3	ND021411-0570	· · PLATE	1	SN:B10001--
4	ND021045-0530	· · COLLAR	1	SN:B10001--
5	ND949006-5590	· · SCREW	4	SN:B10001--
6	ND949100-5010	· · BEARING {BALL}	1	SN:B10001--
7	ND949043-2000	· · BOLT {STUD}	4	SN:B10001--
8	ND021501-8050	· FRAME {REAR}	1	SN:B10001--
9	ND021580-4820	· HOLDER	1	SN:B10001--
10	ND021620-2720	· BRUSH HOLDER ASS'Y	1	SN:B10001--
11	ND126000-2320	· REGULATOR ASS'Y	1	SN:B10001--
12	ND021551-2480	· COVER	1	SN:B10001--
13	ND021605-1970	· BUSHING	4	SN:B10001--
14	ND021605-2481	· BUSHING	1	SN:B10001--
15	ND949006-5460	· SCREW	3	SN:B10001--
16	ND91310-04251	· SCREW	2	SN:B10001--
	ND949007-5110	· SCREW	2	SN:B10001--
17	ND949056-2481	· NUT	7	SN:B10001--
18	ND949056-3080	· NUT	1	SN:B10001--
19	ND021200-8380	· ROTOR ASS'Y	1	SN:B10001--
20	ND949100-2790	· · BEARING {BALL}	1	SN:B10001--
21	ND021506-0070	· · COVER	1	SN:B10001--
22	ND021041-8620	· PULLEY	1	SN:B10001--
23	ND949056-2520	· NUT	1	SN:B10001--
24	ND021626-0190	· SEAL	1	SN:B10001--
25	ND021626-0250	· SEAL	1	SN:B10001--
26	ND021542-0160	· WASHER	1	SN:B10001--
27	ND949006-6401	· SCREW	1	SN:B10001--
28	ND949007-6280	· SCREW	4	SN:B10001--
29	ND021602-5230	· PLATE	1	SN:B10001--
30	ND92150-06061	· NUT	1	SN:B10001--

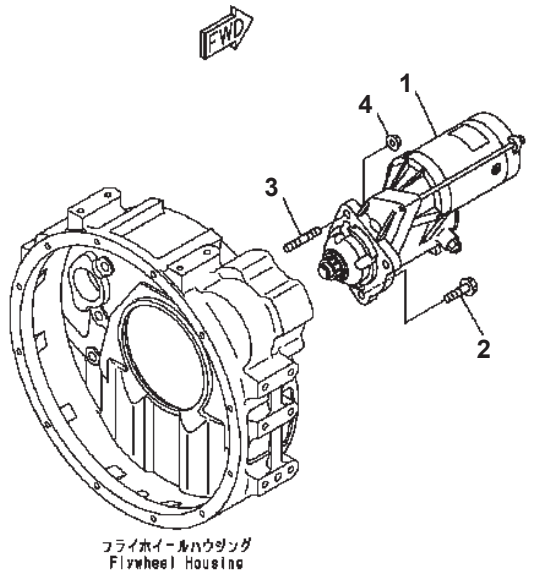

STARTING MOTOR (5.5KM)

Item	Part No.	Description	Qty	Options
1	(600-863-5111)	STARTING MOTOR ASS'Y (5.5KW) (SEE FIG.B0000-11A0)	1	SN:B10001--
2	01435-01040	BOLT	2	SN:B10001--
3	01144-31035	STUD	1	SN:B10001--
4	01584-01008	NUT	1	SN:B10001--

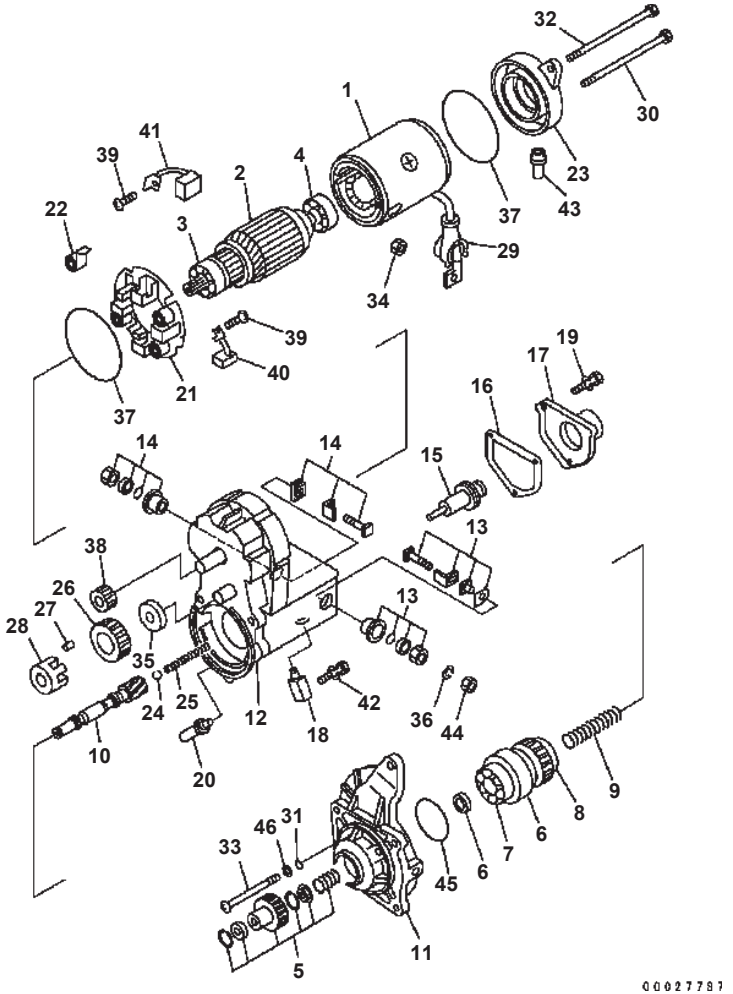

STARTING MOTOR (5.5KM) (INNER PARTS)

Item	Part No.	Description	Qty	Options
	600-863-5111	STARTING MOTOR ASS'Y (5.5KW)	1	SN:B10001--
1	ND028100-5410	· YOKE ASS'Y	1	SN:B10001--
2	ND028200-5250	· ARMATURE ASS'Y	1	SN:B10001--
3	ND949100-3161	· · BEARING {BALL}	1	SN:B10001--
	ND949100-5290	· · BEARING {BALL}	1	SN:B10001--
4	ND949100-3540	· · BEARING {BALL}	1	SN:B10001--
	ND028300-6551	· CLUTCH ASS'Y	1	SN:B10001--
5	ND028099-3270	· · STARTER KIT	1	SN:B10001--
6	ND028300-6751	· · CLUTCH ASS'Y	1	SN:B10001--
7	ND949100-4501	· · · BEARING {BALL¤ FRONT}	1	SN:B10001--
8	ND949100-1920	· · · BEARING {BALL¤ REAR}	1	SN:B10001--
9	ND949170-4040	· · SPRING	1	SN:B10001--
10	ND028381-0071	· · SHAFT	1	SN:B10001--
11	ND128401-5621	· HOUSING	1	SN:B10001--
12	ND153400-6740	· SWITCH ASS'Y {MAGNETIC}	1	SN:B10001--
13	ND128099-5770	· · KIT {STARTER}	1	SN:B10001--
14	ND028099-5100	· · KIT {STARTER}	1	SN:B10001--
15	ND053660-0443	· · PLUNGER	1	SN:B10001--
16	ND053404-0240	· · GASKET	1	SN:B10001--
17	ND053505-0290	· · COVER {SOLENOID}	1	SN:B10001--
18	ND053480-7560	· · BOLT ASS'Y {TERMINAL}	1	SN:B10001--
19	ND949047-4440	· · BOLT	3	SN:B10001--
20	ND028065-0250	· · BUSHING {DRAIN}	1	SN:B10001--
21	ND028510-0880	· HOLDER ASS'Y {BRUSH}	1	SN:B10001--
22	ND028520-0011	· · SPRING {BRUSH}	4	SN:B10001--
23	ND028501-7711	· FRAME	1	SN:B10001--
24	ND128961-0010	· BALL {STEEL}	1	SN:B10001--
25	ND949170-4070	· SPRING	1	SN:B10001--
26	ND028371-3210	· PINION {STARTER}	1	SN:B10001--
27	ND028306-0070	· ROLLER {CLUTCH}	5	SN:B10001--
28	ND028063-0030	· RETAINER	1	SN:B10001--
29	ND028062-0130	· CAP	1	SN:B10001--
30	ND949042-3680	· BOLT	1	SN:B10001--
31	ND90801-10050	· O-RING	3	SN:B10001--
32	ND949042-3690	· BOLT	1	SN:B10001--
33	ND949006-4720	· SCREW	3	SN:B10001--
34	ND949056-4480	· NUT	1	SN:B10001--
35	ND028327-0171	· RETAINER {SNAP}	1	SN:B10001--
36	ND90258-10001	· WASHER {SPRING}	1	SN:B10001--
37	ND028901-0361	· SEAL	2	SN:B10001--

WA320-5 S/N B10001-UP

STARTING MOTOR (5.5KM) (INNER PARTS)

Item	Part No.	Description	Qty	Options
38	ND028371-3200	· PINION	1	SN:B10001--
39	ND949007-6530	· SCREW	4	SN:B10001--
40	ND028530-1090	· BRUSH ASS'Y	2	SN:B10001--
41	ND028530-1100	· BRUSH ASS'Y	2	SN:B10001--
42	ND949007-6850	· SCREW	1	SN:B10001--
43	ND028062-5790	· COVER	1	SN:B10001--
44	ND90170-10061	· NUT	1	SN:B10001--
45	ND028901-5190	· SEAL	1	SN:B10001--
46	ND90200-06241	· WASHER	3	SN:B10001--

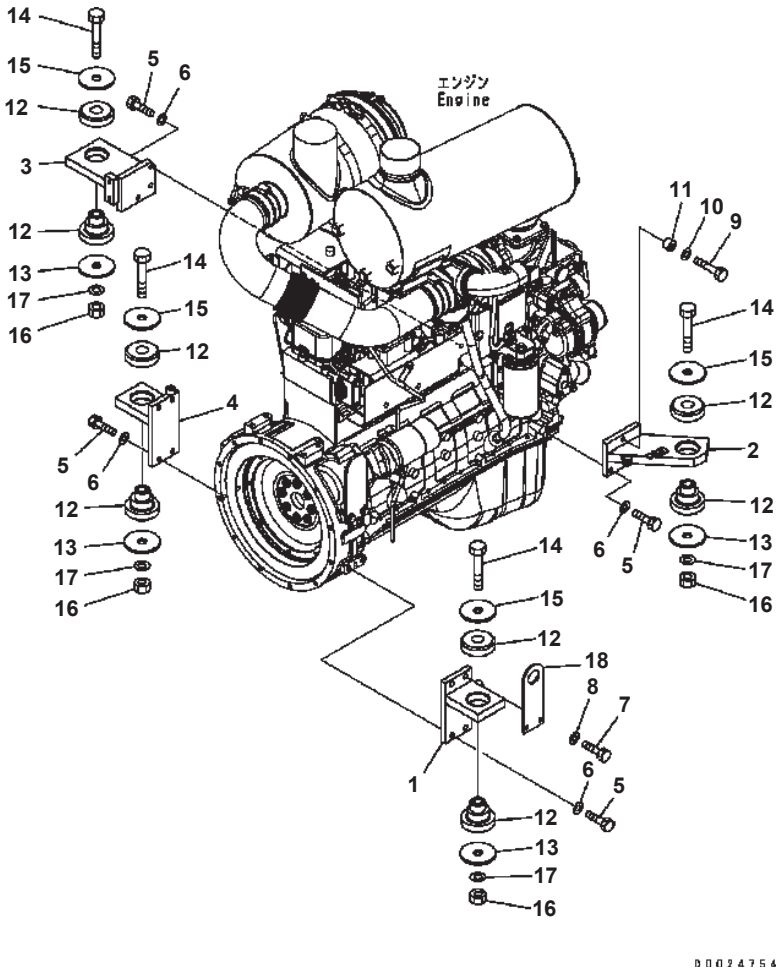

ENGINE MOUNT

Item	Part No.	Description	Qty	Options
1	418-01-31113	BRACKET	1	SN:B10001--
2	418-01-31123	BRACKET	1	SN:B10001--
3	418-01-31133	BRACKET	1	SN:B10001--
4	418-01-31143	BRACKET	1	SN:B10001--
5	01010-81240	BOLT	10	SN:B10001--
6	01643-31232	WASHER	10	SN:B10001--
7	01010-81250	BOLT	2	SN:B10001--
8	01643-31032	WASHER	2	SN:B10001--
9	01010-81260	BOLT	2	SN:B10001--
10	01643-31232	WASHER	2	SN:B10001--
11	424-61-11110	SPACER	2	SN:B10001--
12	418-01-11112	CUSHION	4	SN:B10001--
13	419-01-11162	WASHER	4	SN:B10001--
14	01011-82220	BOLT	4	SN:B10001--
15	419-01-11162	WASHER	4	SN:B10001--
16	01580-02218	NUT	4	SN:B10001--
17	01643-32260	WASHER	4	SN:B10001--
18	6732-21-1920	HANGER	1	SN:B10001--

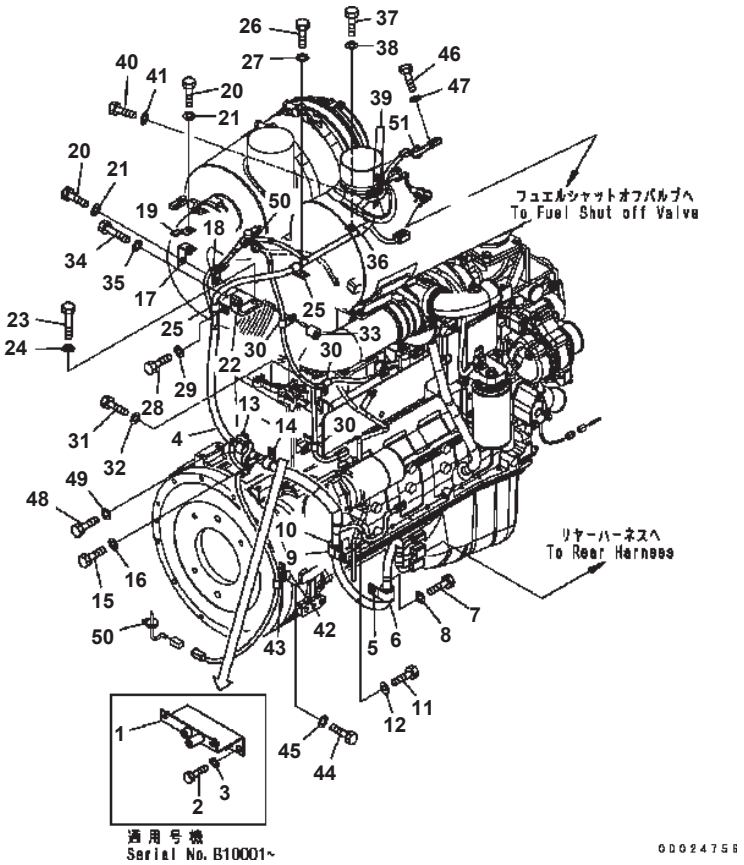

ENGINE HARNESS (1/2)

Item	Part No.	Description	Qty	Options
1	418-07-32113	BRACKET	1	SN:B10001--
2	01010-81220	BOLT	2	SN:B10001--
3	01643-31232	WASHER	2	SN:B10001--
4	419-06-32353	WIRING HARNESS	1	SN:B10041--
	419-06-32352	WIRING HARNESS	1	SN:B10001--B10040
5	04434-53212	CLIP	1	SN:B10001--
6	07095-20523	CUSHION	1	SN:B10001--
7	01010-81020	BOLT	1	SN:B10001--
8	01643-31032	WASHER	1	SN:B10001--
9	04434-53212	CLIP	1	SN:B10001--
10	07095-20523	CUSHION	1	SN:B10001--
11	01010-81020	BOLT	1	SN:B10001--
12	01643-31032	WASHER	1	SN:B10001--
13	04434-51912	CLIP	1	SN:B10001--
14	04434-52312	CLIP	1	SN:B10001--
15	01010-81020	BOLT	2	SN:B10001--
16	01643-31032	WASHER	2	SN:B10001--
17	426-01-12360	PLATE	1	SN:B10001--
18	04434-51412	CLIP	1	SN:B10001--
19	08193-21012	CLIP	1	SN:B10001--
20	01010-81020	BOLT	2	SN:B10001--
21	01643-31032	WASHER	2	SN:B10001--
22	426-07-11130	PLATE	1	SN:B10001--
23	01011-81215	BOLT	1	SN:B10001--
24	01643-31232	WASHER	1	SN:B10001--
25	04434-51412	CLIP	2	SN:B10001--
26	01010-81020	BOLT	1	SN:B10001--
27	01643-31032	WASHER	1	SN:B10001--
28	01010-81025	BOLT	1	SN:B10001--
29	01643-31032	WASHER	1	SN:B10001--
30	04434-51012	CLIP	3	SN:B10001--
31	01010-81020	BOLT	1	SN:B10001--
32	01643-31032	WASHER	1	SN:B10001--
33	195-33-11220	SPACER	1	SN:B10001--
34	01050-51245	BOLT	1	SN:B10001--
35	01643-31232	WASHER	1	SN:B10001--
36	04434-51412	CLIP	1	SN:B10001--
37	01010-81020	BOLT	1	SN:B10001--
38	01643-31032	WASHER	1	SN:B10001--
39	04434-51012	CLIP	2	SN:B10001--

WA320-5 S/N B10001-UP

ENGINE HARNESS (1/2)

Item	Part No.	Description	Qty	Options
40	01010-81020	BOLT	2	SN:B10001--
41	01643-31032	WASHER	2	SN:B10001--
42	42A-942-1270	PLATE	1	SN:B10001--
43	04434-51012	CLIP	1	SN:B10001--
44	01010-81020	BOLT	1	SN:B10001--
45	01643-31032	WASHER	1	SN:B10001--
46	01010-81020	BOLT	1	SN:B10001--
47	01643-31032	WASHER	1	SN:B10001--
48	01010-81016	BOLT	1	SN:B10001--
49	01643-31032	WASHER	1	SN:B10001--
50	08034-40521	BAND	2	SN:B10001--
51	08034-00310	BAND	1	SN:B10001--

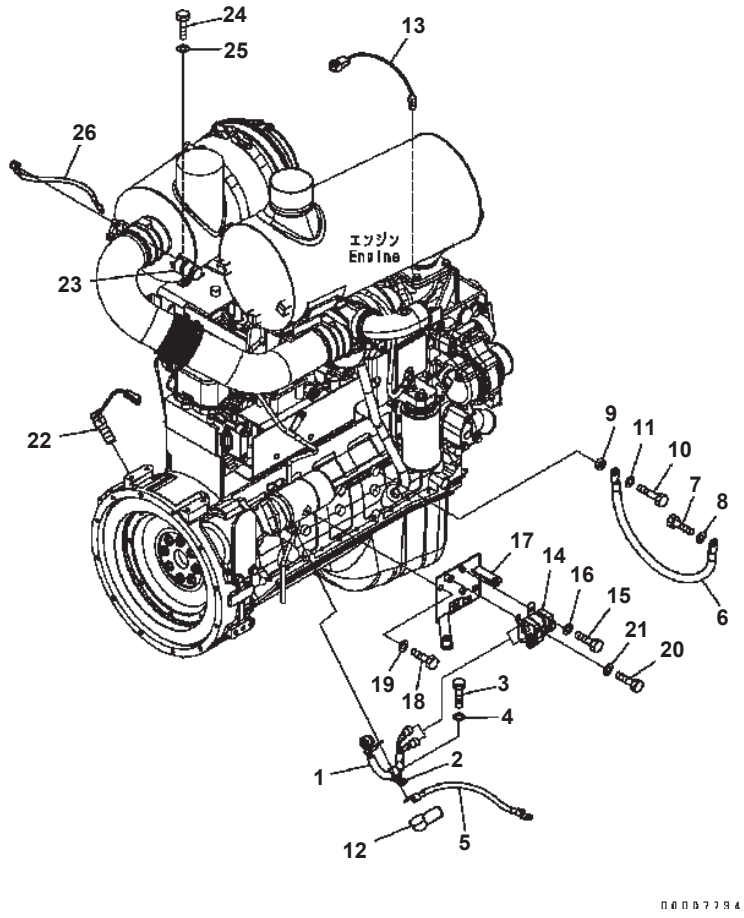

ENGINE HARNESS (2/2) (STARTER HARNESS AND SENSOR)

Item	Part No.	Description	Qty	Options
1	418-06-32274	WIRE	1	SN:B10138--
	□418-06-32273	WIRE	1	SN:B10001--B10137
2	04434-51912	CLIP	1	SN:B10001--
3	01010-81020	BOLT	1	SN:B10001--
4	01643-31032	WASHER	1	SN:B10001--
5	08028-CD040	CABLE	1	SN:B10001--
6	419-06-32251	CABLE	1	SN:B10001--
7	01010-81020	BOLT	1	SN:B10001--
8	01643-31032	WASHER	1	SN:B10001--
9	6131-22-3750	BOSS	1	SN:B10001--
10	01010-81250	BOLT	1	SN:B10001--
11	01643-31232	WASHER	1	SN:B10001--
12	11Y-06-11630	CAP	1	SN:B10001--
13	7861-92-3380	SENSOR	1	SN:B10001--
14	11Y-06-11391	SWITCH	1	SN:B10001--
15	01010-80612	BOLT	2	SN:B10001--
16	01643-30623	WASHER	2	SN:B10001--
17	418-06-31284	BRACKET	1	SN:B10001--
18	01010-81220	BOLT	2	SN:B10001--
19	01643-31232	WASHER	2	SN:B10001--
20	01010-80816	BOLT	1	SN:B10001--
21	01643-30823	WASHER	1	SN:B10001--
22	7861-93-2330	SENSOR	1	SN:B10001--
23	600-815-2170	SWITCH	1	SN:B10001--
24	01010-80616	BOLT	2	SN:B10001--
25	01643-30623	WASHER	2	SN:B10001--
26	418-06-32281	WIRE	1	SN:B10001--

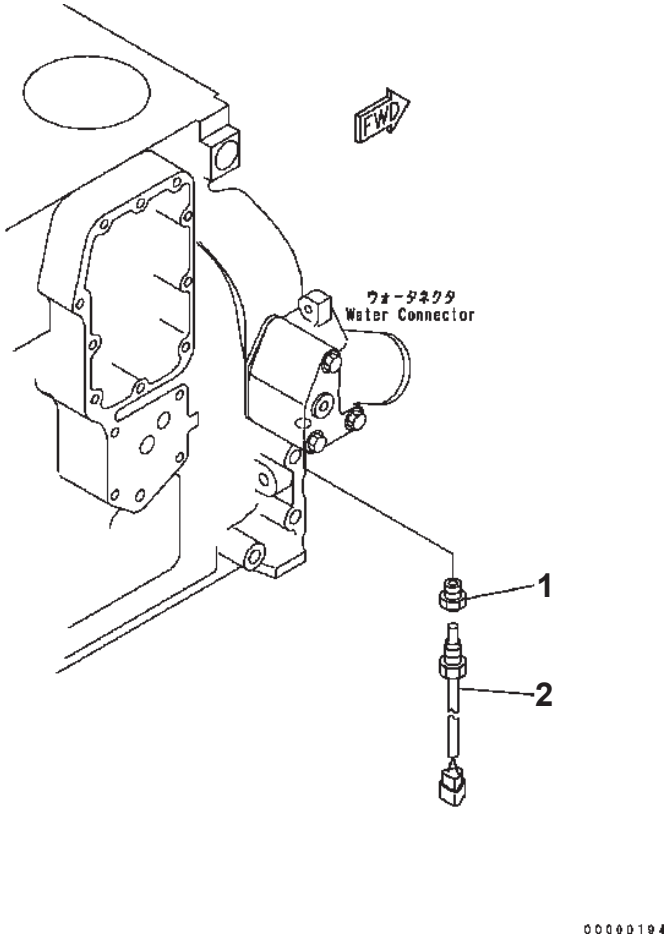

WATER TEMPERATURE SENSOR

Item	Part No.	Description	Qty	Options
1	565-06-13212	ADAPTER	1	SN:B10001--
2	7861-93-3520	SENSOR	1	SN:B10001--

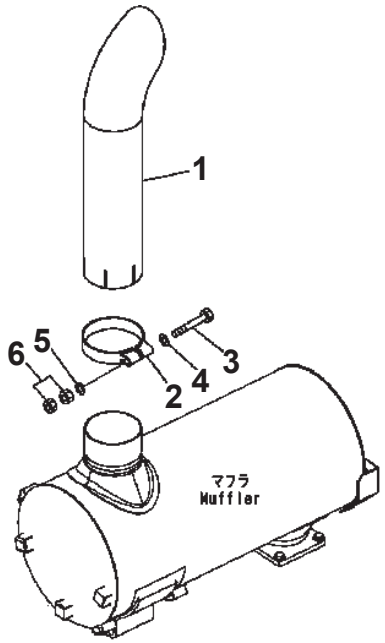

00007735

EXHAUST PIPE

Item	Part No.	Description	Qty	Options
1	419-02-31130	PIPE	1	SN:B10001--
2	419-02-31120	CLAMP	1	SN:B10001--
3	01010-81080	BOLT	1	SN:B10001--
4	01643-31032	WASHER	1	SN:B10001--
5	01643-31032	WASHER	1	SN:B10001--
6	01580-11008	NUT	2	SN:B10001--

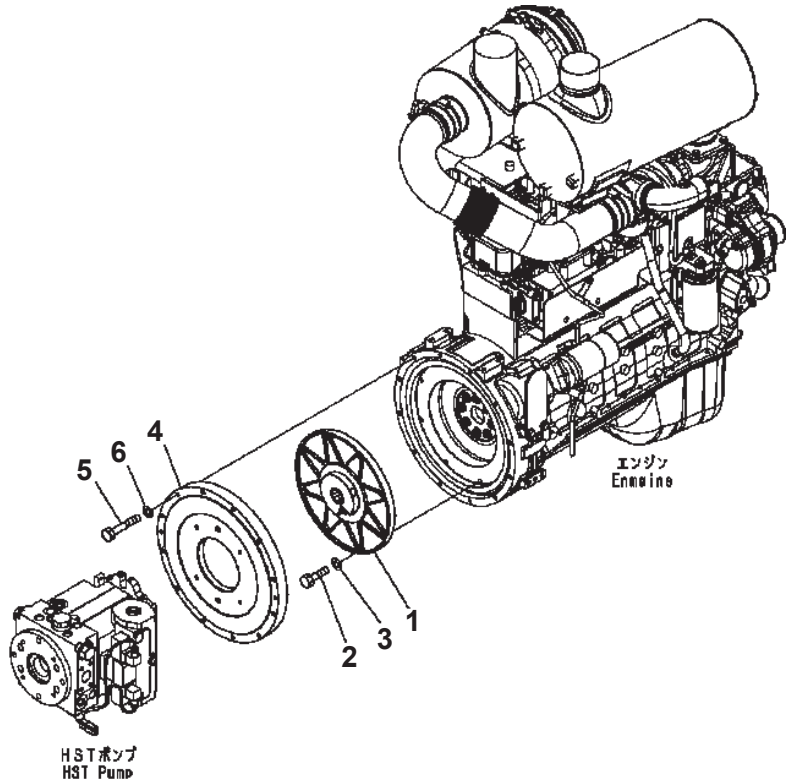

DAMPER

Item	Part No.	Description	Qty	Options
1	419-12-31110	COUPLING	1	SN:B10001--
2	01010-81040	BOLT	8	SN:B10001--
3	01643-31032	WASHER	8	SN:B10001--
4	419-12-31130	COVER	1	SN:B10001--
5	01010-81060	BOLT	12	SN:B10001--
6	01643-31032	WASHER	12	SN:B10001--

COOLING SYSTEM

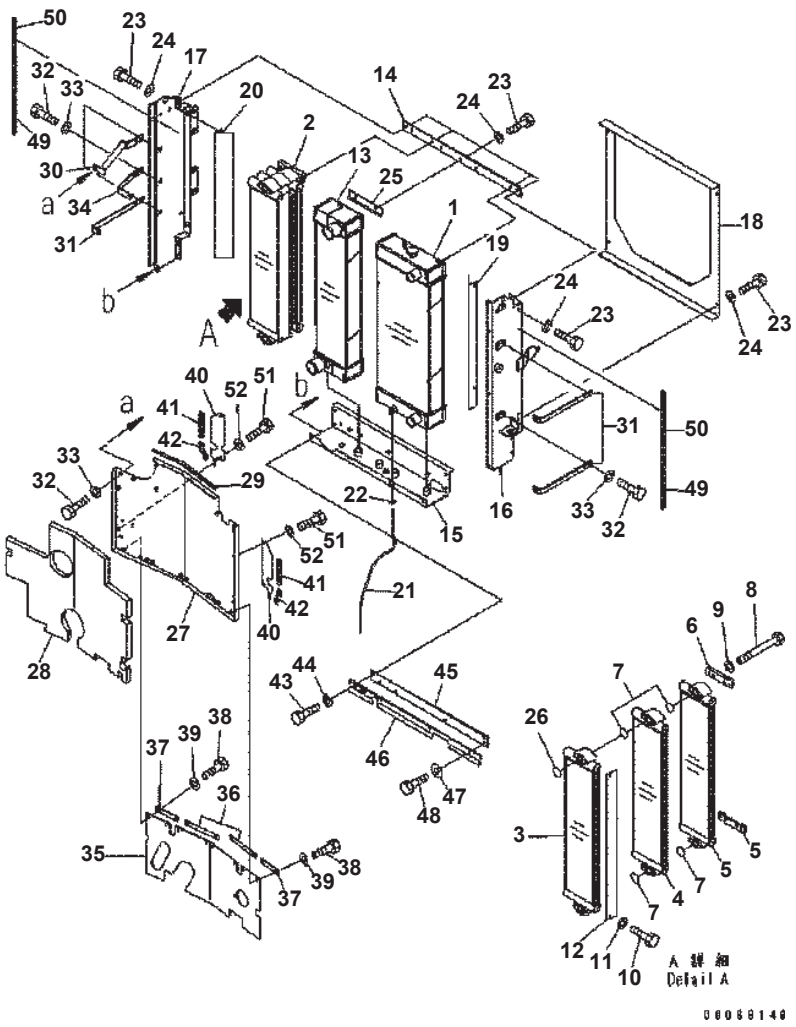

RADIATOR

Item	Part No.	Description	Qty	Options
	419-03-31105	RADIATOR ASS'Y	1	SN:B10001--
1	419-03-31114	· RADIATOR	1	SN:B10001--
1A	416-S14-2270	· · CAP	1	SN:B10001--
2	419-03-31122	· OIL COOLER ASS'Y	1	SN:B10001--
3	419-03-31511	· · OIL COOLER	1	SN:B10001--
4	419-03-31521	· · OIL COOLER	1	SN:B10001--
5	419-03-31540	· · OIL COOLER	1	SN:B10001--
6	419-03-31531	· · PLATE	2	SN:B10001--
7	07000-13035	· · O-RING	4	SN:B10001--
8	01011-81040	· · BOLT	4	SN:B10001--
9	01643-31032	· · WASHER	4	SN:B10001--
10	01010-81020	· · BOLT	2	SN:B10001--
11	01643-31032	· · WASHER	2	SN:B10001--
12	419-03-31550	· · PLATE	1	SN:B10001--
13	419-03-31132	· AIR COOLER	1	SN:B10001--
14	419-03-31413	· PLATE	1	SN:B10063--
	419-03-31412	· PLATE	1	SN:B10001--B10062
15	419-03-31424	· FRAME	1	SN:B10063--
	419-03-31423	· FRAME	1	SN:B10001--B10062
16	419-03-31433	· FRAME	1	SN:B10001--
17	419-03-31442	· FRAME	1	SN:B10001--
18	419-03-31453	· SHROUD	1	SN:B10063--
	419-03-31452	· SHROUD	1	SN:B10001--B10062
19	419-03-31460	· PLATE	1	SN:B10001--
20	419-03-31470	· PLATE	1	SN:B10001--
21	418-03-31570	· HOSE, 750MM	1	SN:B10001--
22	20Y-03-11330	· CLIP	1	SN:B10001--
23	01010-81020	· BOLT	24	SN:B10001--
24	01643-31032	· WASHER	24	SN:B10001--
25	419-03-31490	· PLATE	1	SN:B10001--
26	07000-13035	O-RING	2	SN:B10001--
27	419-03-31164	BUFFLE	1	SN:B10063--
	419-03-31163	BUFFLE	1	SN:B10001--B10062
28	419-03-31374	SHEET	1	SN:B10063--
	419-03-31373	SHEET	1	SN:B10001--B10062
29	419-03-31240	SHEET	1	SN:B10001--
30	419-03-31250	GRIP	1	SN:B10001--
31	419-03-31230	BRACKET	3	SN:B10001--
32	01010-81020	BOLT	14	SN:B10001--
33	01643-31032	WASHER	14	SN:B10001--

WA320-5 S/N B10001-UP

RADIATOR

Item	Part No.	Description	Qty	Options
34	419-03-31260	BRACKET	1	SN:B10001--
35	419-03-31310	SHEET	1	SN:B10063--
36	419-03-31320	PLATE	2	SN:B10063--
37	419-03-31330	PLATE	2	SN:B10063--
38	01010-81020	BOLT	8	SN:B10063--
39	01643-31032	WASHER	8	SN:B10063--
40	419-03-31710	PLATE	2	SN:B10063--
41	415-54-31190	SEAL	2	SN:B10063--
42	425-54-13480	SEAL	2	SN:B10063--
43	01010-81025	BOLT	2	SN:B10063--
44	01643-31032	WASHER	2	SN:B10063--
45	419-54-32210	PLATE	1	SN:B10063--
46	419-54-32220	SHEET	1	SN:B10063--
47	201-54-72910	WASHER	4	SN:B10063--
48	01010-81020	BOLT	4	SN:B10063--
49	419-54-32150	SHEET	2	SN:B10063--
50	419-54-32160	SHEET	2	SN:B10063--
51	01010-81016	BOLT	4	SN:B10063--
52	01643-31032	WASHER	4	SN:B10063--

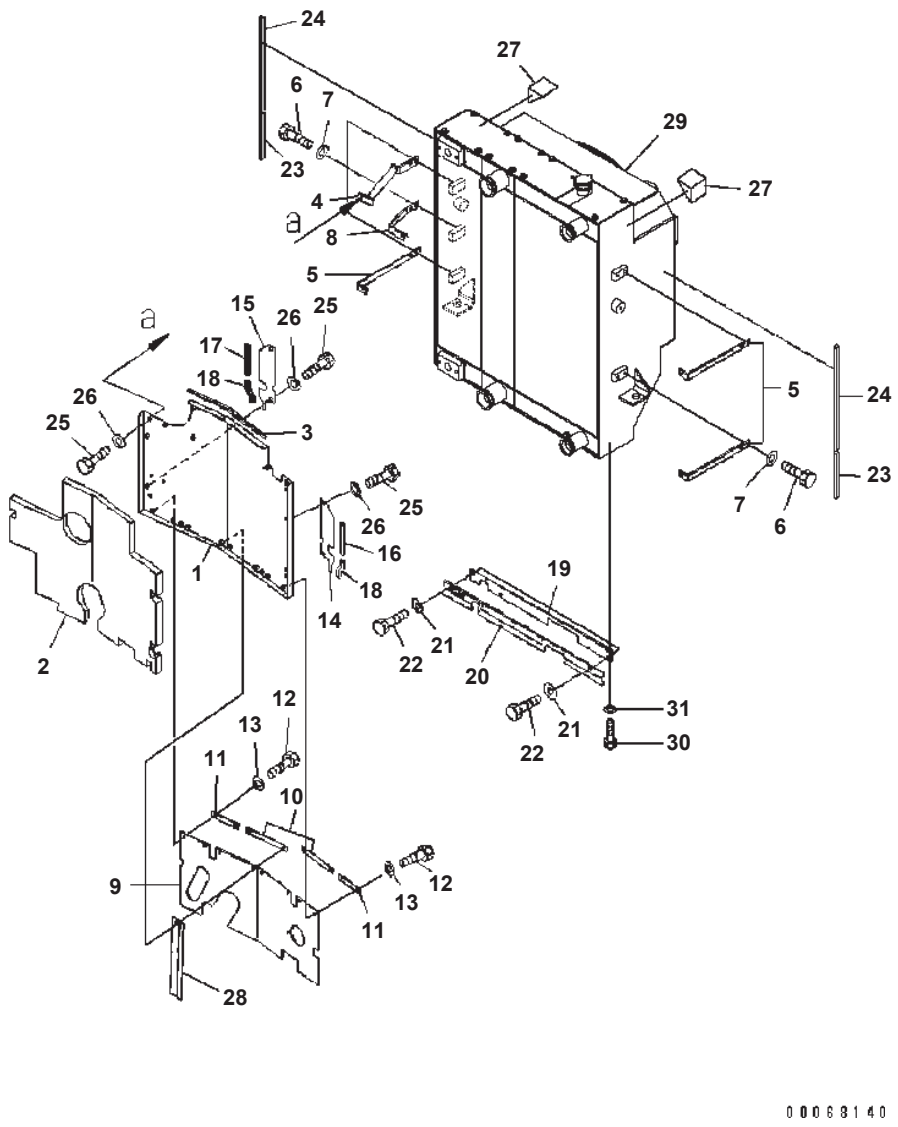

RADIATOR (FOR SUGAR CANE) (#B10186-)

Item	Part No.	Description	Qty	Options
1	419-03-31164	BUFFLE	1	SN:B10186--
2	419-03-31374	SHEET	1	SN:B10186--
3	419-03-31240	SHEET	1	SN:B10186--
4	419-03-31250	GRIP	1	SN:B10186--
5	419-03-31230	BRACKET	3	SN:B10186--
6	01010-81020	BOLT	14	SN:B10186--
7	01643-31032	WASHER	14	SN:B10186--
8	419-03-31260	BRACKET	1	SN:B10186--
9	419-03-B2021	SHEET	1	SN:B10288--
	419-03-B2020	SHEET	1	SN:B10186--B10287
10	419-03-31320	PLATE	2	SN:B10186--
11	419-03-31330	PLATE	2	SN:B10186--B10287
12	01010-81020	BOLT	8	SN:B10186--B10287
13	01643-31032	WASHER	8	SN:B10186--
14	419-03-B2030	PLATE L.H.	1	SN:B10186--
15	419-03-B2040	PLATE R.H.	1	SN:B10186--
16	419-54-B5310	SEAL	1	SN:B10186--B10287
17	419-54-B5320	SEAL	1	SN:B10186--B10287
18	425-54-13480	SEAL	2	SN:B10186--B10287
19	419-54-B5350	PLATE	1	SN:B10186--
20	419-54-32220	SHEET	1	SN:B10186--
21	201-54-72910	WASHER	4	SN:B10186--
22	01010-81020	BOLT	4	SN:B10186--
23	419-54-32150	SHEET	2	SN:B10186--
24	419-54-32160	SHEET	2	SN:B10186--
25	01010-81016	BOLT	4	SN:B10186--
26	01643-31032	WASHER	4	SN:B10186--
27	419-54-B5380	SHEET	2	SN:B10186--
28	419-03-B2110	PLATE	1	SN:B10186--
29	419-03-A1010	RADIADOR ASS'Y (SEE FIG. C0110-03A0)	1	SN:B10186--
30	01010-80612	BOLT	3	SN:B10186--
31	01643-30623	WASHER	3	SN:B10186--

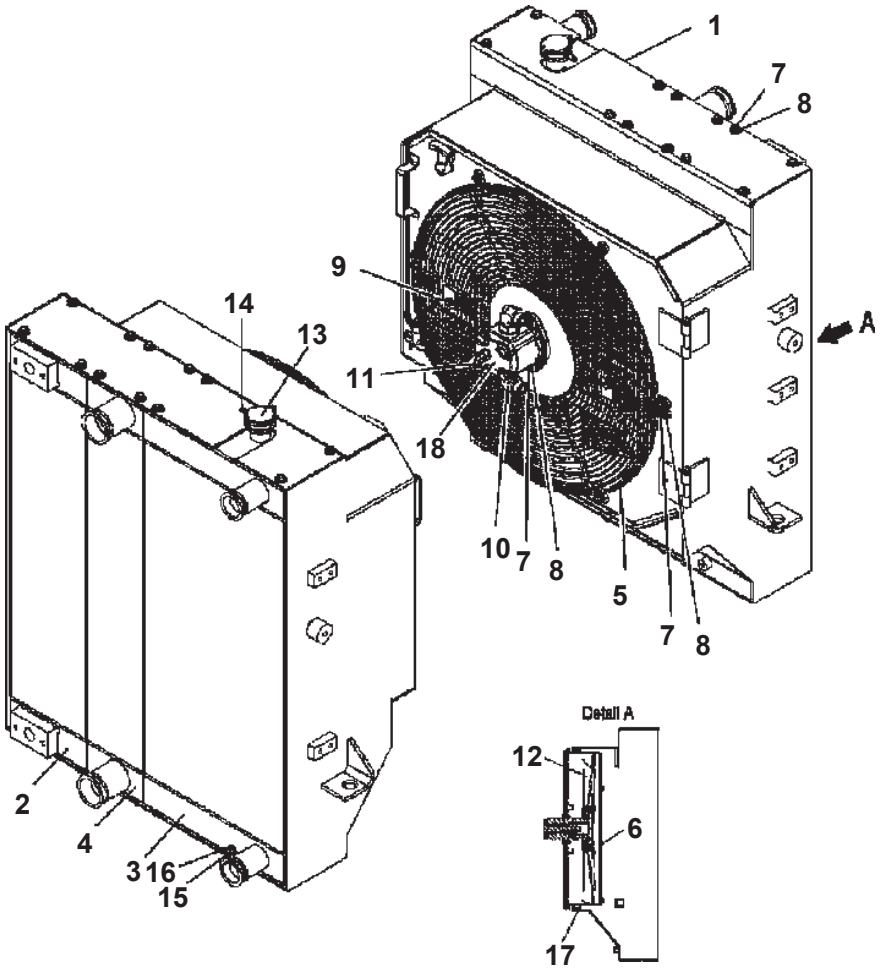

RADIATOR (FOR SUGAR CANE) (SUPPLY PARTS) (#B10186-)

Item	Part No.	Description	Qty	Options
	419-03-A1010	RADIATOR ASS'Y	1	SN:B10186--
	AF0406.122.0000	· RADIATOR	1	SN:B10186--
1	AF0406.122.7000	· · SHROUD	1	SN:B10186--
2	AF0406.122.1000	· · HYDRAULIC OIL COOLER	1	SN:B10186--
3	AF0406.122.2000	· · RADIATOR	1	SN:B10186--
4	AF0406.122.5000	· · AFTER COOLER	1	SN:B10186--
5	AF0406.122.4030	· · GUARD, FAN	1	SN:B10186--
6	AF0406.122.4040	· · GUARD, FAN	1	SN:B10186--
7	AF8050.019.0000	· · BOLT	38	SN:B10186--
8	AF8054.010.0000	· · WASHER	38	SN:B10186--
9	AF8050.033.0000	· · BOLT	2	SN:B10186--
10	AF608.946	· · ELBOW	2	SN:B10186--
11	AF608.945	· · ELBOW	1	SN:B10186--
12	AF8400.303.0024	· · FAN	1	SN:B10186--
13	AF8103.001.4600	· · CAP	1	SN:B10186--
14	AF608.950	· · FITTING	1	SN:B10186--
15	AF603.295	· · PLUG	1	SN:B10186--
16	AF603.655	· · WASHER	1	SN:B10186--
17	AF8065.058.0000	· · SEAL	1	SN:B10186--
18	AF8407.400.0094	· · HYDRAULIC MOTOR	1	SN:B10186--

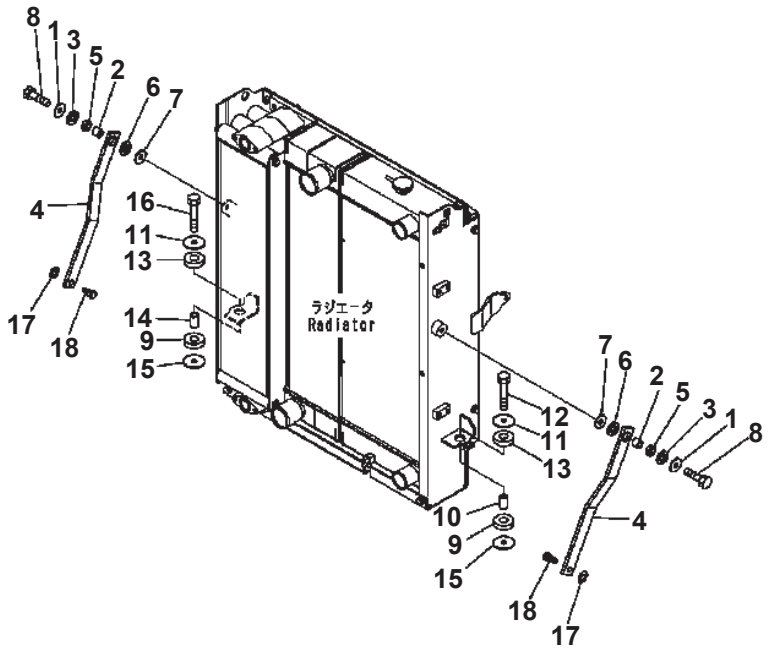

RADIATOR MOUNT

Item	Part No.	Description	Qty	Options
1	419-43-17920	WASHER	2	SN:B10001--
2	416-03-11270	SPACER	2	SN:B10001--
3	416-03-11260	CUSHION	2	SN:B10001--
4	418-03-31182	PLATE	2	SN:B10001--
5	416-03-11250	CUSHION	2	SN:B10001--
6	416-03-11260	CUSHION	2	SN:B10001--
7	419-43-17920	WASHER	2	SN:B10001--
8	01010-81245	BOLT	2	SN:B10001--
9	418-03-11390	CUSHION	2	SN:B10001--
10	415-03-11210	SPACER	1	SN:B10001--
11	416-03-11210	WASHER	2	SN:B10001--
12	01010-81265	BOLT	1	SN:B10001--
13	418-03-11390	CUSHION	2	SN:B10001--
14	415-03-11210	SPACER	1	SN:B10001--
15	416-03-11210	WASHER	2	SN:B10001--
16	01010-81265	BOLT	1	SN:B10001--
17	01643-31232	WASHER	2	SN:B10001--
18	416-03-11281	BOLT	2	SN:B10001--

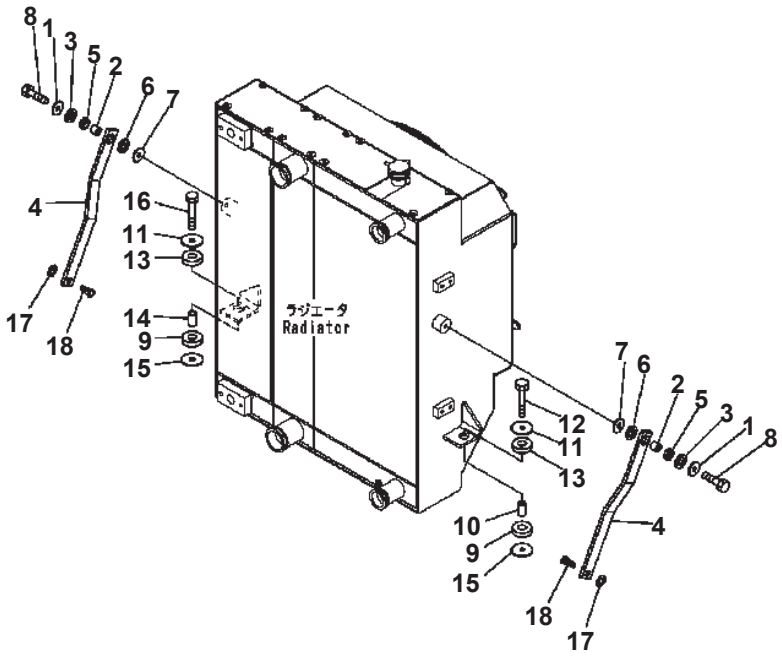

RADIATOR MOUNT (FOR SUGAR CANE) (#B10186-)

Item	Part No.	Description	Qty	Options
1	419-43-17920	WASHER	2	SN:B10186--
2	416-03-11270	SPACER	2	SN:B10186--
3	416-03-11260	CUSHION	2	SN:B10186--
4	418-03-31182	PLATE	2	SN:B10186--
5	416-03-11250	CUSHION	2	SN:B10186--
6	416-03-11260	CUSHION	2	SN:B10186--
7	419-43-17920	WASHER	2	SN:B10186--
8	01010-81245	BOLT	2	SN:B10186--
9	418-03-11390	CUSHION	2	SN:B10186--
10	415-03-11210	SPACER	1	SN:B10186--
11	416-03-11210	WASHER	2	SN:B10186--
12	01010-81265	BOLT	1	SN:B10186--
13	418-03-11390	CUSHION	2	SN:B10186--
14	415-03-11210	SPACER	1	SN:B10186--
15	416-03-11210	WASHER	2	SN:B10186--
16	01010-81265	BOLT	1	SN:B10186--
17	01643-31232	WASHER	2	SN:B10186--
18	416-03-11281	BOLT	2	SN:B10186--

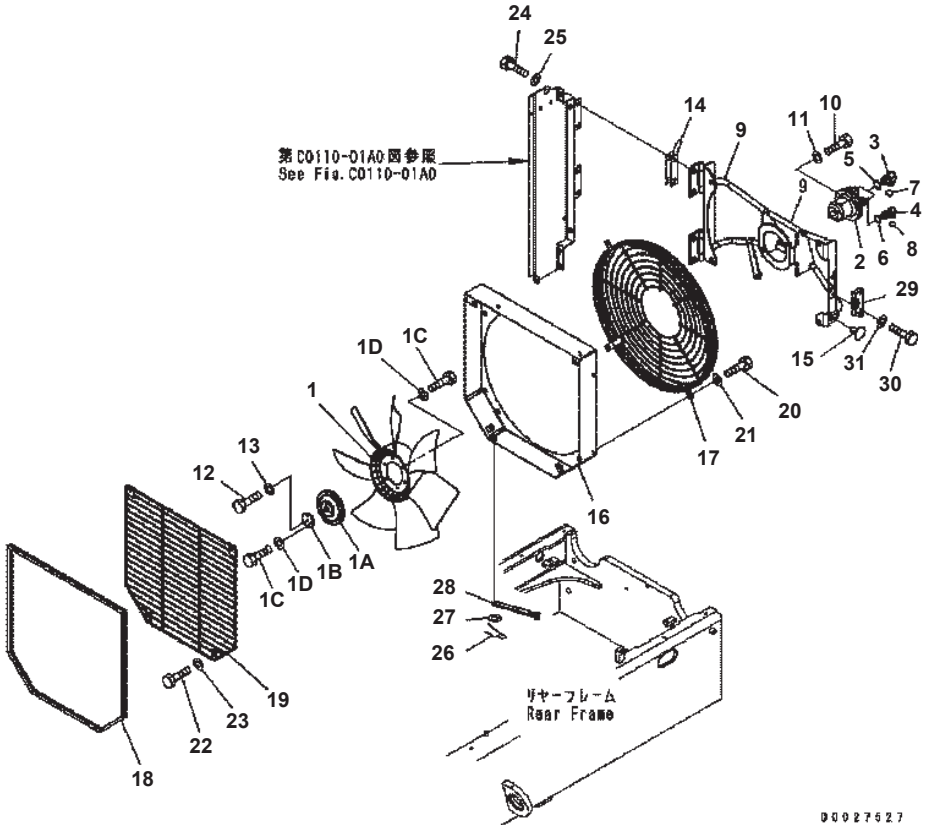

RADIATOR (FAN DRIVE)

Item	Part No.	Description	Qty	Options
	419-03-33211	FAN ASS'Y	1	SN:B10001--
1	418-03-33220	· FAN	1	SN:B10001--
1A	419-03-33290	· PLATE	1	SN:B10001--
1B	419-03-33231	· BOSS	1	SN:B10001--
1C	01010-80820	· BOLT	9	SN:B10001--
1D	01643-30823	· WASHER	9	SN:B10001--
2	419-03-33242	FAN MOTOR	1	SN:B10001--
3	418-18-32342	ELBOW	2	SN:B10001--
4	21W-62-43980	ELBOW	1	SN:B10001--
5	07000-12018	O-RING	2	SN:B10001--
6	07000-12011	O-RING	1	SN:B10001--
7	02896-11015	O-RING	2	SN:B10001--
8	02896-11008	O-RING	1	SN:B10001--
9	419-03-33253	BRACKET	1	SN:B10001--
10	01010-81035	BOLT	2	SN:B10001--
11	01643-31032	WASHER	2	SN:B10001--
12	01010-80825	BOLT	1	SN:B10001--
13	01643-30823	WASHER	1	SN:B10001--
14	418-03-33190	SHIM	3	SN:B10001--
15	416-54-34230	PLUG	2	SN:B10001--
16	418-03-33118	SHROUD	1	SN:B10001--
17	418-03-33124	GUARD	1	SN:B10158--
	418-03-33123	GUARD	1	SN:B10001--B10157
18	418-03-33131	SEAL	1	SN:B10001--
19	419-03-31340	GUARD	1	SN:B10158--
	□418-03-33142	GUARD	1	SN:B10001--B10157
20	01010-81020	BOLT	8	SN:B10158--
	01010-81020	BOLT	12	SN:B10001--B10157
21	01643-31032	WASHER	8	SN:B10158--
	01643-31032	WASHER	12	SN:B10001--B10157
22	01010-81025	BOLT	4	SN:B10158--
23	01643-31032	WASHER	4	SN:B10158--
24	01010-81230	BOLT	4	SN:B10001--
25	01643-31232	WASHER	4	SN:B10001--
26	04052-11038	PIN {SNAP}	1	SN:B10001--
27	01640-21016	WASHER	1	SN:B10001--
28	419-03-33170	STOPPER	1	SN:B10001--
29	418-03-33280	LOCK	1	SN:B10001--
30	01010-80635	BOLT	4	SN:B10001--
31	01643-30623	WASHER	4	SN:B10001--

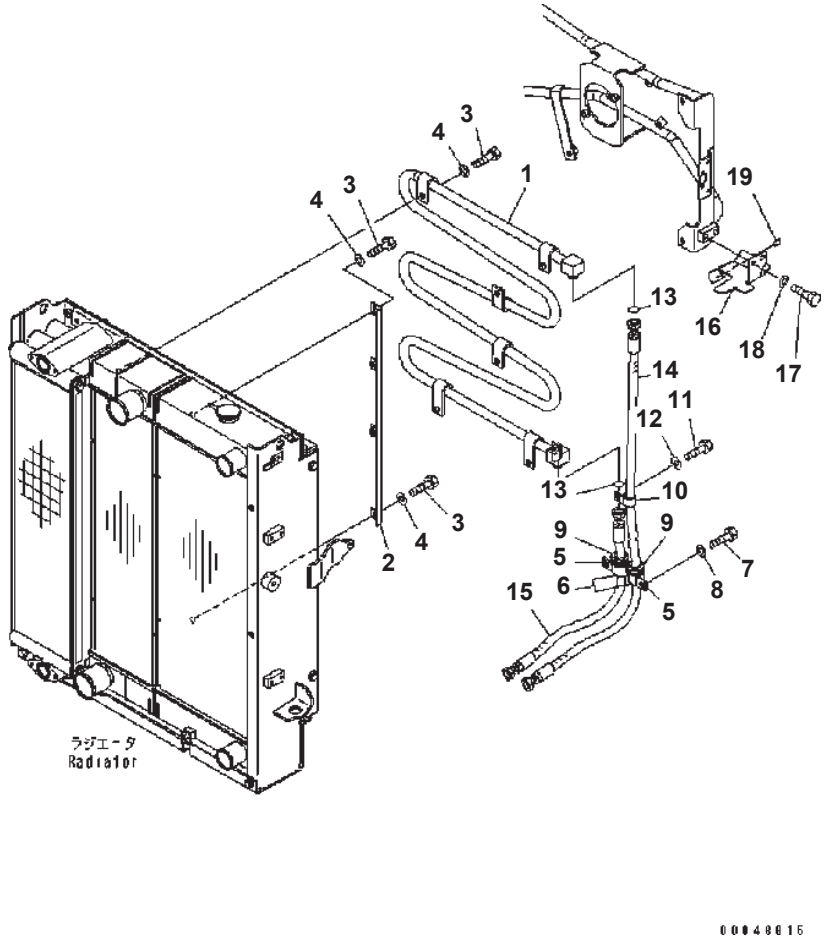

TRANSFER OIL COOLER

Item	Part No.	Description	Qty	Options
1	419-14-31310	TUBE	1	SN:B10001--
2	419-14-31320	BRACKET	2	SN:B10001--
3	01010-81025	BOLT	8	SN:B10001--
4	01643-31032	WASHER	8	SN:B10001--
5	04434-82712	CLIP	2	SN:B10001--
6	07095-20420	CUSHION	2	SN:B10001--
7	01010-81020	BOLT	2	SN:B10001--
8	01643-31032	WASHER	2	SN:B10001--
9	418-06-12430	GROMMET	2	SN:B10001--
10	04434-51912	CLIP	1	SN:B10001--
11	01010-81020	BOLT	1	SN:B10001--
12	01643-31032	WASHER	1	SN:B10001--
13	02896-21012	O-RING	2	SN:B10001--
14	419-14-31360	HOSE	1	SN:B10001--
15	419-14-31350	HOSE	1	SN:B10001--
16	419-Z03-3150	PLATE	1	SN:B10001--
17	01010-81020	BOLT	2	SN:B10001--
18	01643-31032	WASHER	2	SN:B10001--
19	421-09-21420	SHEET	2	SN:B10001--

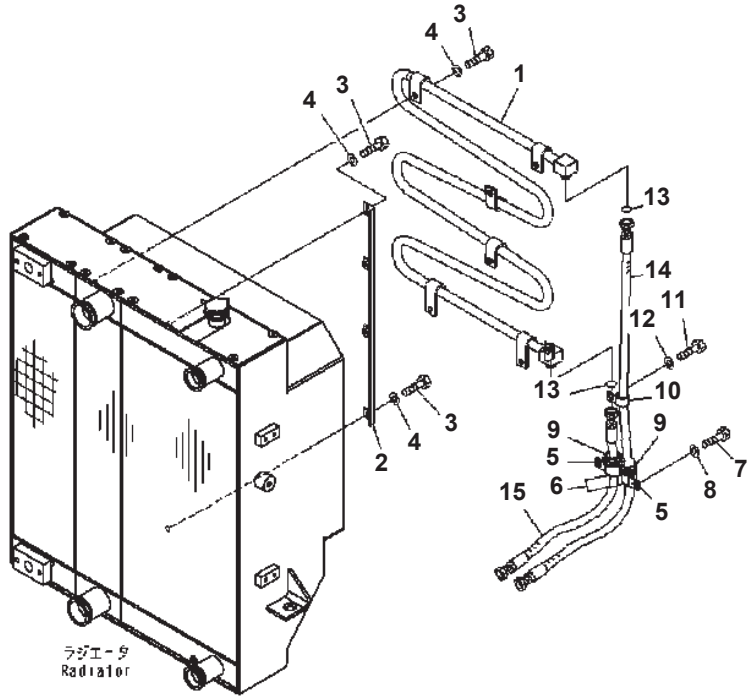

WA320-5 S/N B10001-UP

TRANSFER OIL COOLER (FOR SUGAR CANE) (#B10186-)

Item	Part No.	Description	Qty	Options
1	419-14-31310	TUBE	1	SN:B10186--
2	419-14-31320	BRACKET	2	SN:B10186--
3	01010-81025	BOLT	8	SN:B10186--
4	01643-31032	WASHER	8	SN:B10186--
5	04434-52712	CLIP	2	SN:B10186--
6	07095-20420	CUSHION	2	SN:B10186--
7	01010-81020	BOLT	2	SN:B10186--
8	01643-31032	WASHER	2	SN:B10186--
9	418-06-12430	GROMMET	2	SN:B10186--
10	04434-51912	CLIP	1	SN:B10186--
11	01010-81020	BOLT	1	SN:B10186--
12	01643-31032	WASHER	1	SN:B10186--
13	02896-21012	O-RING	2	SN:B10186--
14	419-14-31360	HOSE	1	SN:B10186--
15	419-14-31350	HOSE	1	SN:B10186--

Ref. C0110-06A1 Page 060080

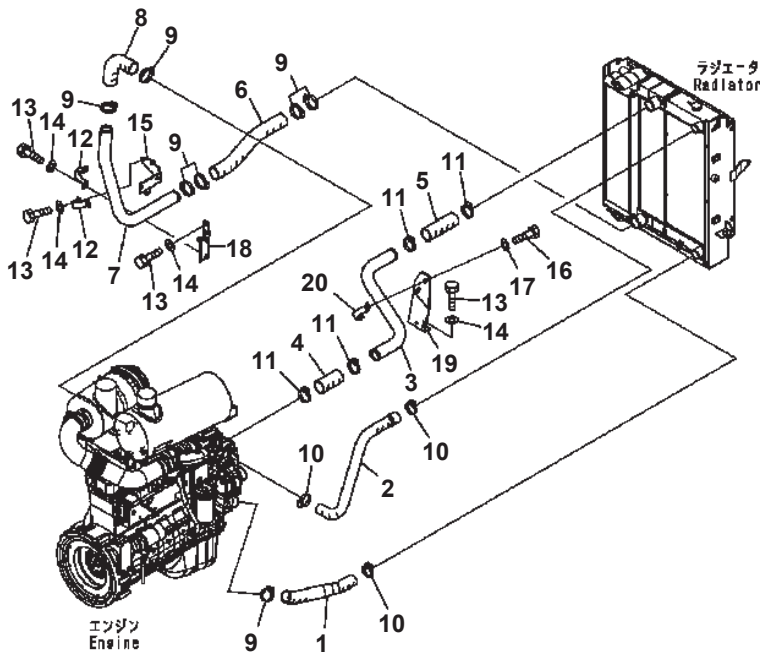

COOLING LINE

Item	Part No.	Description	Qty	Options
1	419-03-32110	HOSE	1	SN:B10001--
2	419-03-32122	HOSE	1	SN:B10001--
3	419-03-32171	PIPE	1	SN:B10001--
4	418-03-32180	HOSE	1	SN:B10001--
5	418-03-32250	HOSE	1	SN:B10001--
6	419-03-32141	HOSE	1	SN:B10001--
7	418-03-32153	PIPE	1	SN:B10001--
8	418-03-32160	HOSE	1	SN:B10001--
9	07289-00070	CLAMP	7	SN:B10001--
10	07289-00055	CLAMP	3	SN:B10001--
11	07299-00070	CLAMP	4	SN:B10001--
12	418-03-31251	PLATE	2	SN:B10001--
13	01010-81225	BOLT	10	SN:B10001--
14	01643-31232	WASHER	10	SN:B10001--
15	418-03-31294	BRACKET	1	SN:B10001--
16	01010-81225	BOLT	2	SN:B10001--
17	124-54-26540	WASHER	2	SN:B10001--
18	419-03-31220	BRACKET	1	SN:B10001--
19	419-03-32191	BRACKET	1	SN:B10001--
20	418-03-32261	PLATE	1	SN:B10001--

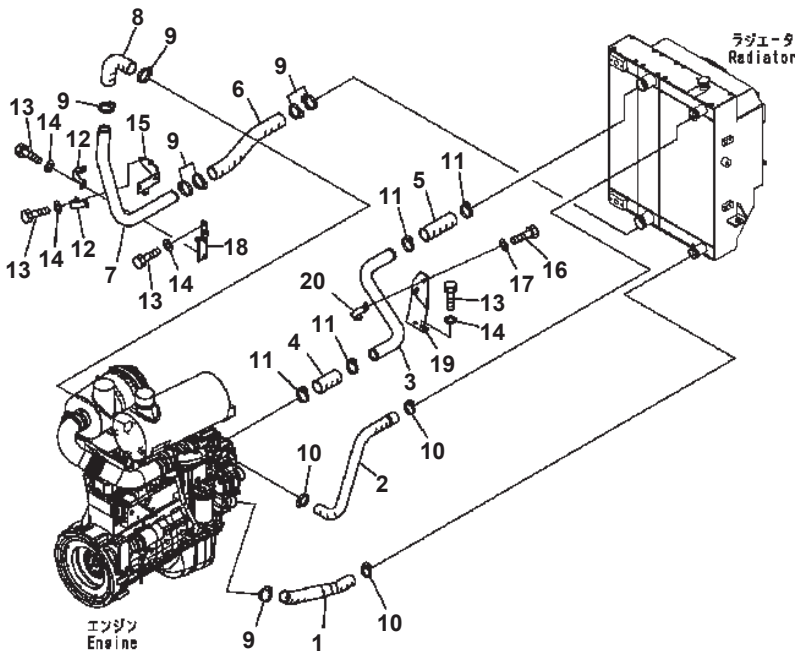

WA320-5 S/N B10001-UP

COOLING LINE (FOR SUGAR CANE) (#B10186-)

Item	Part No.	Description	Qty	Options
1	419-03-B2070	HOSE	1	SN:B10186--
2	419-03-32122	HOSE	1	SN:B10186--
3	419-03-B2010	PIPE	1	SN:B10186--
4	418-03-32180	HOSE	1	SN:B10186--
5	419-03-B2060	HOSE	1	SN:B10186--
6	419-03-B2050	HOSE	1	SN:B10186--
7	418-03-32153	PIPE	1	SN:B10186--
8	418-03-32160	HOSE	1	SN:B10186--
9	07289-00070	CLAMP	7	SN:B10186--
10	07289-00055	CLAMP	3	SN:B10186--
11	07299-00070	CLAMP	4	SN:B10186--
12	418-03-31251	PLATE	2	SN:B10186--
13	01010-81225	BOLT	10	SN:B10186--
14	01643-31232	WASHER	10	SN:B10186--
15	418-03-31294	BRACKET	1	SN:B10186--
16	01010-81225	BOLT	2	SN:B10186--
17	124-54-26540	WASHER	2	SN:B10186--
18	419-03-31220	BRACKET	1	SN:B10186--
19	419-03-32191	BRACKET	1	SN:B10186--
20	418-03-32261	PLATE	1	SN:B10186--

Ref. C0120-01A1 Page 060100

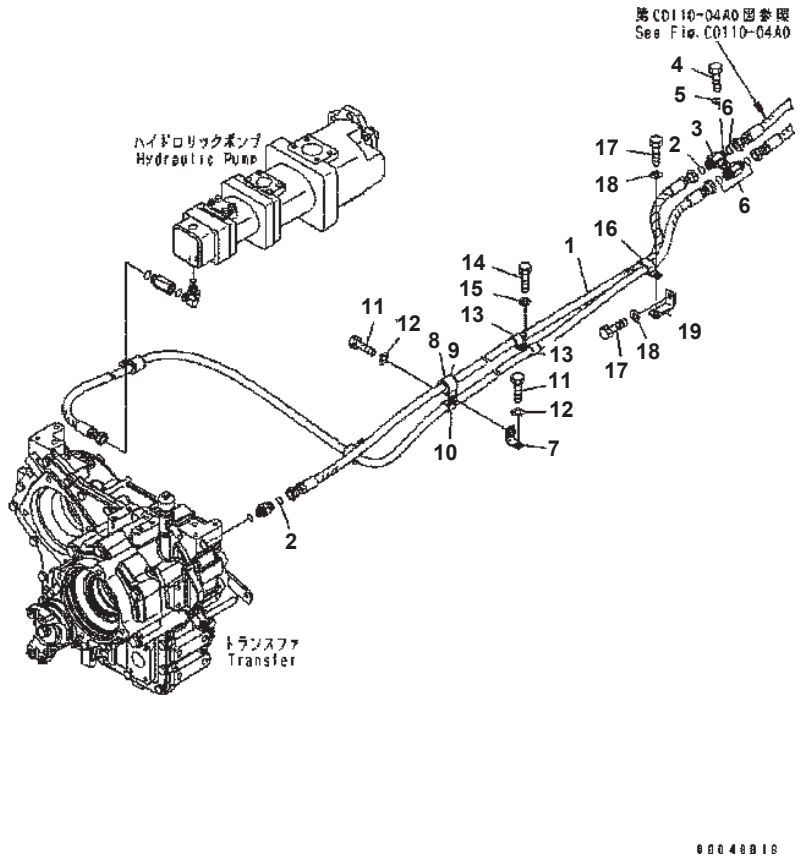

TRANSFER OIL COOLER

Item	Part No.	Description	Qty	Options
1	419-14-31251	HOSE	1	SN:B10001--
2	02896-21012	O-RING	2	SN:B10001--
3	419-14-31330	CONNECTOR	1	SN:B10001--
4	01010-81025	BOLT	1	SN:B10001--
5	01643-31032	WASHER	1	SN:B10001--
6	02896-21012	O-RING	3	SN:B10001--
7	42A-16-11210	PLATE	1	SN:B10001--
8	04434-52712	CLIP	1	SN:B10001--
9	07095-20420	CUSHION	1	SN:B10001--
10	04434-51912	CLIP	1	SN:B10001--
11	01010-81020	BOLT	2	SN:B10001--
12	01643-31032	WASHER	2	SN:B10001--
13	04434-51912	CLIP	2	SN:B10001--
14	01010-81020	BOLT	1	SN:B10001--
15	01643-31032	WASHER	1	SN:B10001--
16	04435-51912	CLIP	1	SN:B10001--
17	01010-81020	BOLT	2	SN:B10001--
18	01643-31032	WASHER	2	SN:B10001--
19	286-90-13410	BRACKET	1	SN:B10001--

FUEL SYSTEM

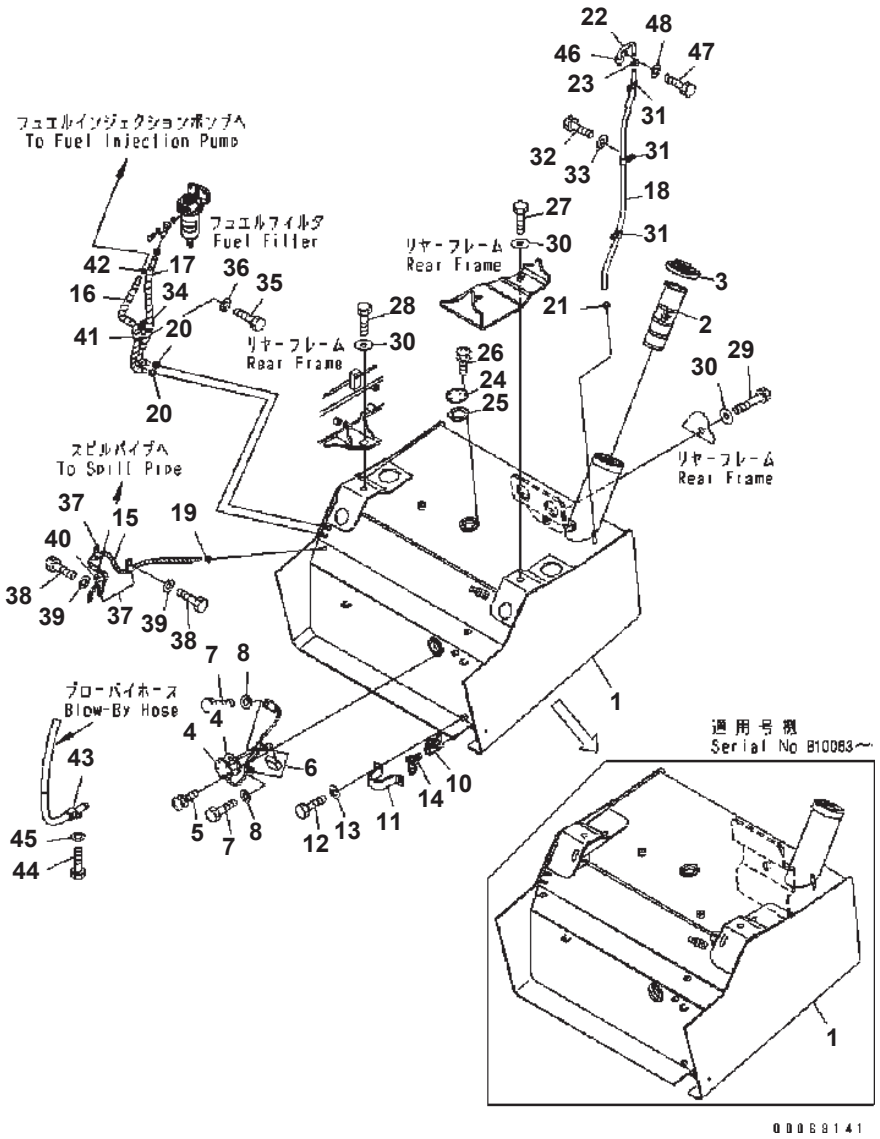

FUEL TANK

Item	Part No.	Description	Qty	Options
1	419-04-31118	TANK	1	SN:B10063--
	419-04-31117	TANK	1	SN:B10001--B10062
2	07056-18422	STRAINER	1	SN:B10001--
	417-04-21230	・ PACKING	1	SN:B10001--
3	423-04-11362	CAP	1	SN:B10001--
4	418-04-31133	SENSOR	1	SN:B10001--
5	01023-10510	SCREW	5	SN:B10001--
6	04434-50610	CLIP	2	SN:B10001--
7	01010-80812	BOLT	2	SN:B10001--
8	01643-30823	WASHER	2	SN:B10001--
9	418-04-31220	PACKING	1	SN:B10001--
10	363-04-11130	VALVE	1	SN:B10001--
11	417-04-10140	COVER	1	SN:B10001--
12	01010-80816	BOLT	2	SN:B10001--
13	01643-30823	WASHER	2	SN:B10001--
14	07217-71013	ELBOW	1	SN:B10001--
15	419-04-31212	HOSE ASS'Y	1	SN:B10001--
16	419-04-31242	HOSE ASS'Y	1	SN:B10001--
17	419-04-31232	HOSE ASS'Y	1	SN:B10001--
18	07270-21085	TUBE	1	SN:B10001--
19	07285-00080	CLIP	1	SN:B10001--
20	11Y-09-11140	CLIP	1	SN:B10001--
21	07285-00130	CLIP	2	SN:B10001--
22	419-04-31250	TUBE	1	SN:B10001--
23	07285-00130	CLIP	1	SN:B10001--
24	418-04-31210	COVER	1	SN:B10001--
25	418-04-31220	PACKING	1	SN:B10001--
26	01023-10510	SCREW	5	SN:B10001--
27	01010-81635	BOLT	1	SN:B10001--
28	01010-81635	BOLT	1	SN:B10001--
29	01010-81665	BOLT	1	SN:B10001--
30	421-70-11280	WASHER	3	SN:B10001--
31	04434-51510	CLIP	3	SN:B10001--
32	01010-81020	BOLT	3	SN:B10001--
33	01643-31032	WASHER	3	SN:B10001--
34	04434-52310	CLIP	1	SN:B10001--
35	01010-81020	BOLT	1	SN:B10001--
36	01643-31032	WASHER	1	SN:B10001--
37	04434-51410	CLIP	3	SN:B10001--
38	01010-81020	BOLT	3	SN:B10001--

WA320-5 S/N B10001-UP

FUEL TANK

Item	Part No.	Description	Qty	Options
39	01643-31032	WASHER	3	SN:B10001--
40	07285-00080	CLIP	1	SN:B10001--
41	04434-52310	CLIP	1	SN:B10001--
42	11Y-09-11140	CLIP	1	SN:B10001--
43	04434-52711	CLIP	1	SN:B10001--
44	01010-81020	BOLT	1	SN:B10001--
45	01643-31032	WASHER	1	SN:B10001--
46	04434-51010	CLIP	1	SN:B10001--
47	01010-81020	BOLT	1	SN:B10001--
48	01643-31032	WASHER	1	SN:B10001--

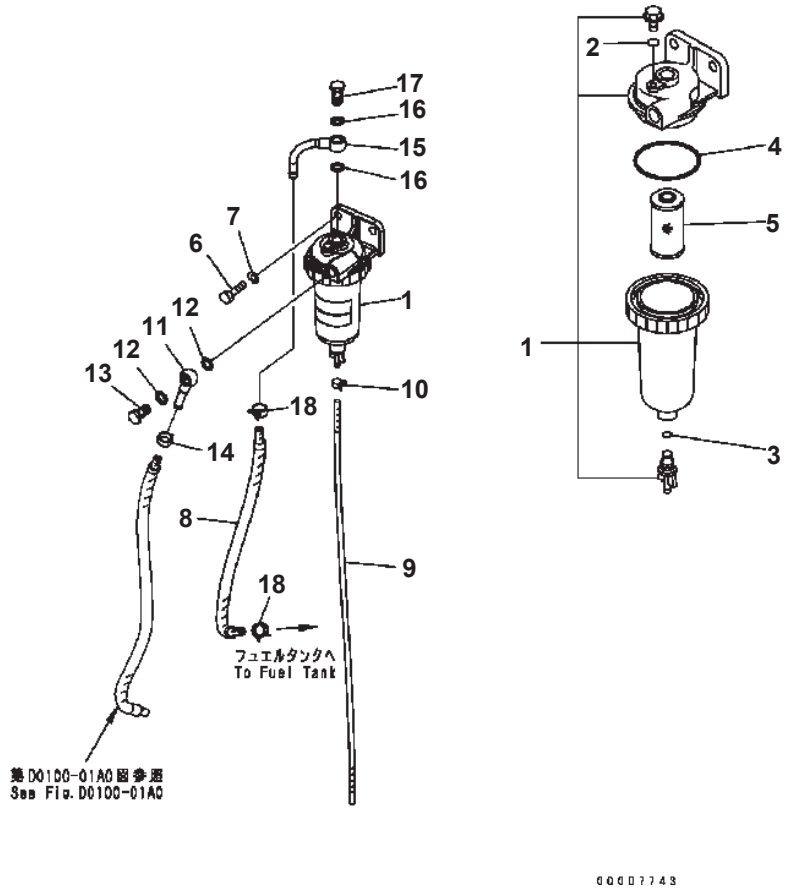

WATER SEPARATOR

Item	Part No.	Description	Qty	Options
1	6738-71-9110	WATER SEPARATOR	1	SN:B10001--
2	07000-11006	· O-RING	1	SN:B10001--
3	07000-11007	· O-RING	1	SN:B10001--
4	07000-12065	· O-RING	1	SN:B10001--
5	22U-04-21260	· ELEMENT	1	SN:B10001--
6	01010-81030	BOLT	2	SN:B10001--
7	01643-31032	WASHER	2	SN:B10001--
8	419-04-31223	HOSE ASS'Y	1	SN:B10001--
9	07270-20760	TUBE	1	SN:B10001--
10	07285-00100	CLIP	1	SN:B10001--
11	6204-73-5750	JOINT	1	SN:B10001--
12	07005-01412	GASKET	2	SN:B10001--
13	07206-31014	BOLT {JOINT}	1	SN:B10001--
14	11Y-09-11140	CLIP	1	SN:B10001--
15	6144-71-5760	JOINT	1	SN:B10001--
16	07005-01412	GASKET	2	SN:B10001--
17	07206-31014	BOLT {JOINT}	1	SN:B10001--
18	11Y-09-11140	CLIP	2	SN:B10001--

ELECTRICAL SYSTEM

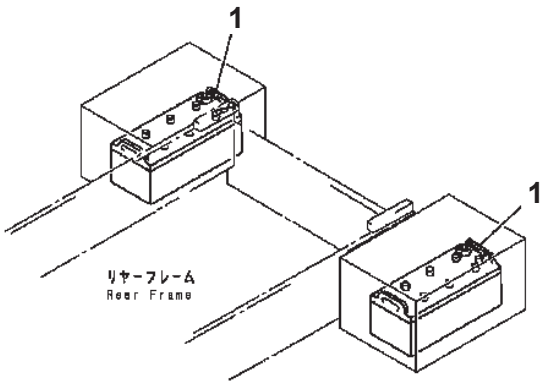

PLE3326

BATTERY

Item	Part No.	Description	Qty	Options
1	134-06-61550	BATTERY¤ WET	2	SN:B10025--
	◆134-06-61460	BATTERY¤ WET	2	SN:B10001--B10024
	08000-00000	TERMINAL¤ (+)	2	SN:B10001--
	08000-00001	TERMINAL¤ (-)	2	SN:B10001--

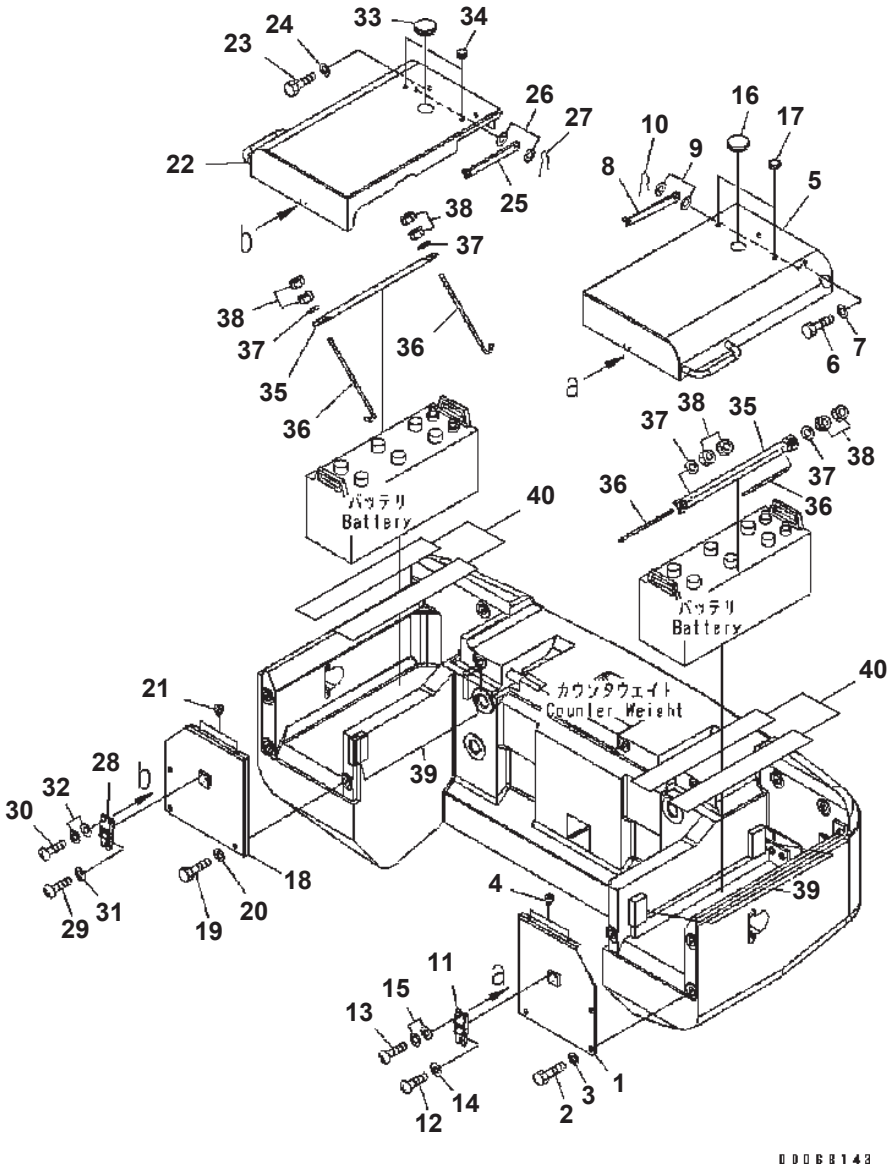

BATTERY BOX

Item	Part No.	Description	Qty	Options
1	419-06-31114	COVER, L.H.	1	SN:B10001--
2	01010-81020	BOLT	3	SN:B10001--
3	01643-31032	WASHER	3	SN:B10001--
4	415-54-11980	CUSHION	2	SN:B10001--
5	419-06-31521	COVER	1	SN:B10001--
6	01010-81020	BOLT	2	SN:B10001--
7	01643-31032	WASHER	2	SN:B10001--
8	421-06-24230	BAR	1	SN:B10001--
9	01641-20812	WASHER	2	SN:B10001--
10	04052-10833	PIN, SNAP	1	SN:B10001--
11	421-09-12322	HOLDER	1	SN:B10001--
12	01220-40410	SCREW	3	SN:B10001--
13	01220-40410	SCREW	2	SN:B10001--
14	01641-20405	WASHER	3	SN:B10001--
15	01640-20408	WASHER	4	SN:B10001--
16	09415-03614	CAP	1	SN:B10001--
17	09415-00706	CAP	2	SN:B10001--
18	419-06-31124	COVER, R.H.	1	SN:B10001--
19	01010-81020	BOLT	3	SN:B10001--
20	01643-31032	WASHER	3	SN:B10001--
21	415-54-11980	CUSHION	2	SN:B10001--
22	419-06-31531	COVER	1	SN:B10001--
23	01010-81020	BOLT	2	SN:B10001--
24	01643-31032	WASHER	2	SN:B10001--
25	421-06-24230	BAR	1	SN:B10001--
26	01641-20812	WASHER	2	SN:B10001--
27	04052-10833	PIN, SNAP	1	SN:B10001--
28	421-09-12322	HOLDER	1	SN:B10001--
29	01220-40410	SCREW	3	SN:B10001--
30	01220-40410	SCREW	2	SN:B10001--
31	01641-20405	WASHER	3	SN:B10001--
32	01640-20408	WASHER	4	SN:B10001--
33	09415-03614	CAP	1	SN:B10001--
34	09415-00706	CAP	2	SN:B10001--
35	419-06-31250	HOLDER	2	SN:B10001--
36	419-06-31170	ROD	4	SN:B10001--
37	01643-30823	WASHER	4	SN:B10001--
38	01580-10806	NUT	8	SN:B10001--
39	419-06-31370	RUBBER	4	SN:B10001--
40	08007-03549	CUSHION	4	SN:B10029--

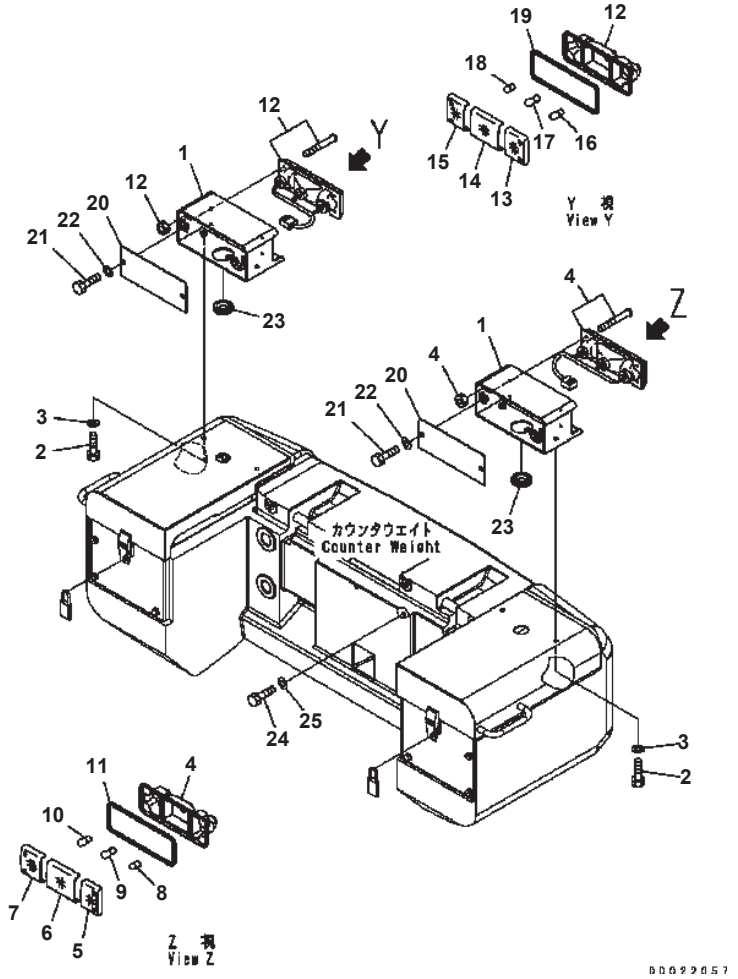

REAR COMBINATION LAMP AND NUMBER PLATE

Item	Part No.	Description	Qty	Options
1	418-06-31541	BRACKET	2	SN:B10001--
2	01010-D1020	BOLT	4	SN:B10001--
3	01643-71032	WASHER	4	SN:B10001--
4	418-06-33230	LAMP ASS'Y	1	SN:B10001--
5	23A-06-21410	・ LENS {AMBER}	1	SN:B10001--
6	23A-06-21420	・ LENS {RED}	1	SN:B10001--
7	23A-06-21430	・ LENS {CLEAR}	1	SN:B10001--
8	08105-12420	・ BULB¤ 25W	1	SN:B10001--
9	08104-12420	・ BULB¤ 25/10W	1	SN:B10001--
10	08110-12410	・ BULB¤ 12W	1	SN:B10001--
11	23A-06-21440	・ GASKET	1	SN:B10001--
12	418-06-33260	LAMP ASS'Y	1	SN:B10001--
13	23A-06-21510	・ LENS {AMBER}	1	SN:B10001--
14	23A-06-21520	・ LENS {RED}	1	SN:B10001--
15	23A-06-21530	・ LENS {CLEAR}	1	SN:B10001--
16	08105-12420	・ BULB¤ 25W	1	SN:B10001--
17	08104-12420	・ BULB¤ 25/10W	1	SN:B10001--
18	08110-12410	・ BULB¤ 12W	1	SN:B10001--
19	23A-06-21440	・ GASKET	1	SN:B10001--
20	419-06-23420	PLATE	2	SN:B10001--
21	01010-D1020	BOLT	4	SN:B10001--
22	01643-71032	WASHER	4	SN:B10001--
23	08037-03614	GROMMET	2	SN:B10001--
24	01010-D1020	BOLT	2	SN:B10001--
25	01643-71032	WASHER	2	SN:B10001--

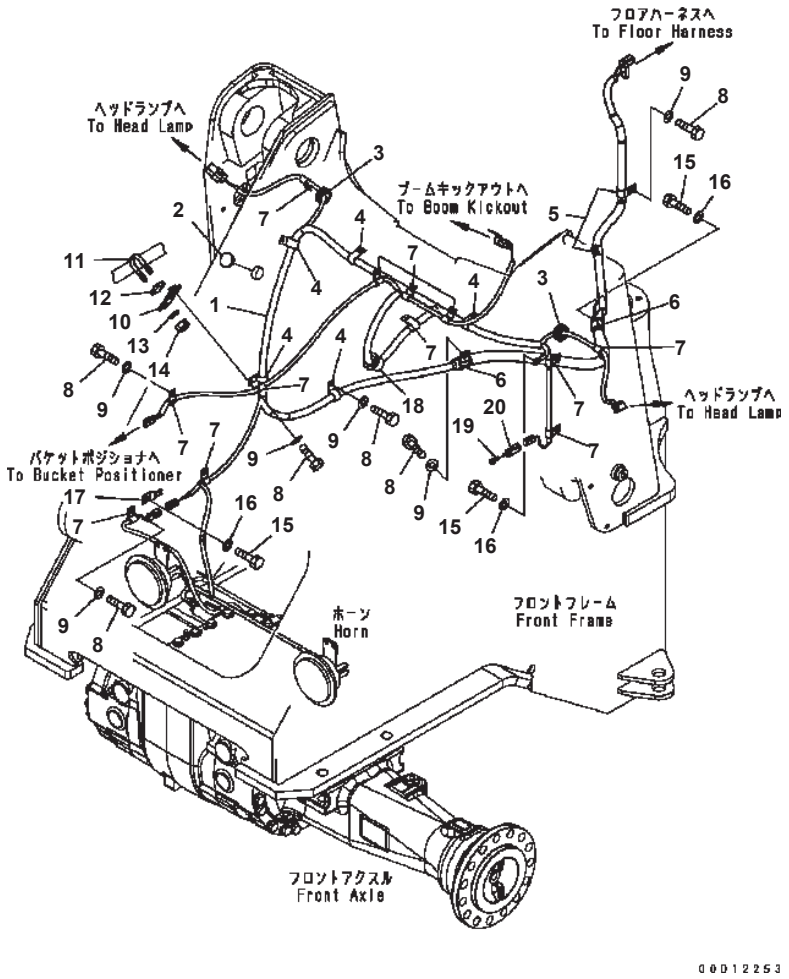

FRONT HARNESS

Item	Part No.	Description	Qty	Options
1	419-06-32181	WIRING HARNESS	1	SN:B10001--
2	419-06-31770	PLUG	1	SN:B10001--
3	418-06-12430	GROMMET	2	SN:B10001--
4	04434-51712	CLIP	5	SN:B10001--
5	04434-51912	CLIP	2	SN:B10001--
6	04434-52512	CLIP	2	SN:B10001--
7	04434-51012	CLIP	12	SN:B10001--
8	01010-81020	BOLT	21	SN:B10001--
9	01643-31032	WASHER	21	SN:B10001--
10	423-06-32280	BRACKET	1	SN:B10001--
11	07283-33450	CLIP	1	SN:B10001--
12	07283-53444	SEAT	1	SN:B10001--
13	01643-31032	WASHER	2	SN:B10001--
14	01597-01009	NUT	2	SN:B10001--
15	01010-81016	BOLT	3	SN:B10001--
16	01643-31032	WASHER	3	SN:B10001--
17	08193-21012	CLIP	1	SN:B10001--
18	426-09-11210	GROMMET	1	SN:B10001--
19	08191-00770	PLUG	2	SN:B10001--
20	08192-22100	CONNECTOR	1	SN:B10001--

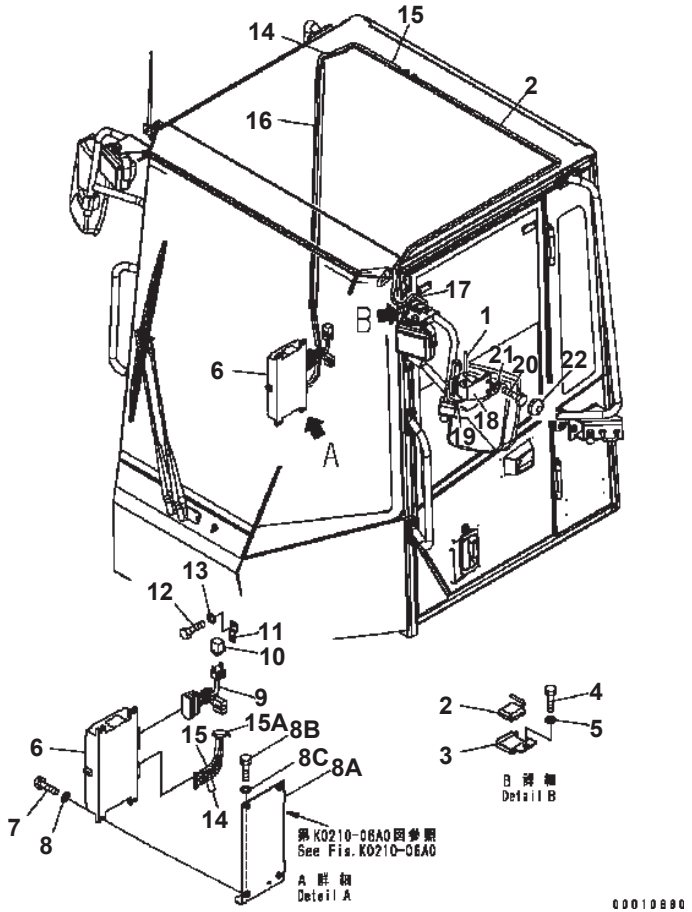

KOMTRAX (#B10001-B10242)

Item	Part No.	Description	Qty	Options
1	8A13-10-2100	ANTENNA {FILM}	1	SN:B10001--@
2	8A13-10-1310	ANTENNA {GPS}	1	SN:B10017--@
	8A13-10-2310	ANTENNA {GPS}	1	SN:B10001--B10016
3	418-925-3490	BRACKET	1	SN:B10001--B10242
4	01010-80816	BOLT	1	SN:B10001--@
5	01643-30823	WASHER	1	SN:B10001--@
6	7826-20-7035	CONTROLLER	1	SN:B10228--@
	7826-20-7034	CONTROLLER	1	SN:B10130--B10227
	7826-20-7033	CONTROLLER	1	SN:B10017--B10129
	7826-20-7031	CONTROLLER	1	SN:B10001--B10016
7	01010-80825	BOLT	4	SN:B10001--@
8	01643-30823	WASHER	4	SN:B10001--@
8A	419-54-32681	BRACKET	1	SN:B10001--@
8B	01010-80816	BOLT	4	SN:B10021--@
	01010-80823	BOLT	4	SN:B10001--B10020
8C	01643-30823	WASHER	4	SN:B10001--@
9	419-06-31392	WIRING HARNESS	1	SN:B10001--B10242
10	569-06-61960	RELAY	1	SN:B10001--@
11	287-06-16420	BRACKET	1	SN:B10001--@
12	01010-80610	BOLT	1	SN:B10001--@
13	01643-30623	WASHER	1	SN:B10001--@
14	7826-20-9311	CABLE	1	SN:B10025--@
	7826-20-9310	CABLE	1	SN:B10001--B10024
15	8A13-10-1410	CABLE	1	SN:B10001--@
15A	08059-00310	CLIP	2	SN:B10001--B10242
16	21J-54-14782	DUCT	1	SN:B10001--@
17	08034-40521	BAND	5	SN:B10001--@
18	421-925-3180	COVER	1	SN:B10001--@
19	08017-30710	CONDUIT	1	SN:B10001--B10242
20	01435-01020	BOLT	2	SN:B10001--@
21	01643-31032	WASHER	2	SN:B10001--@
22	363-54-31450	CAP	2	SN:B10001--@

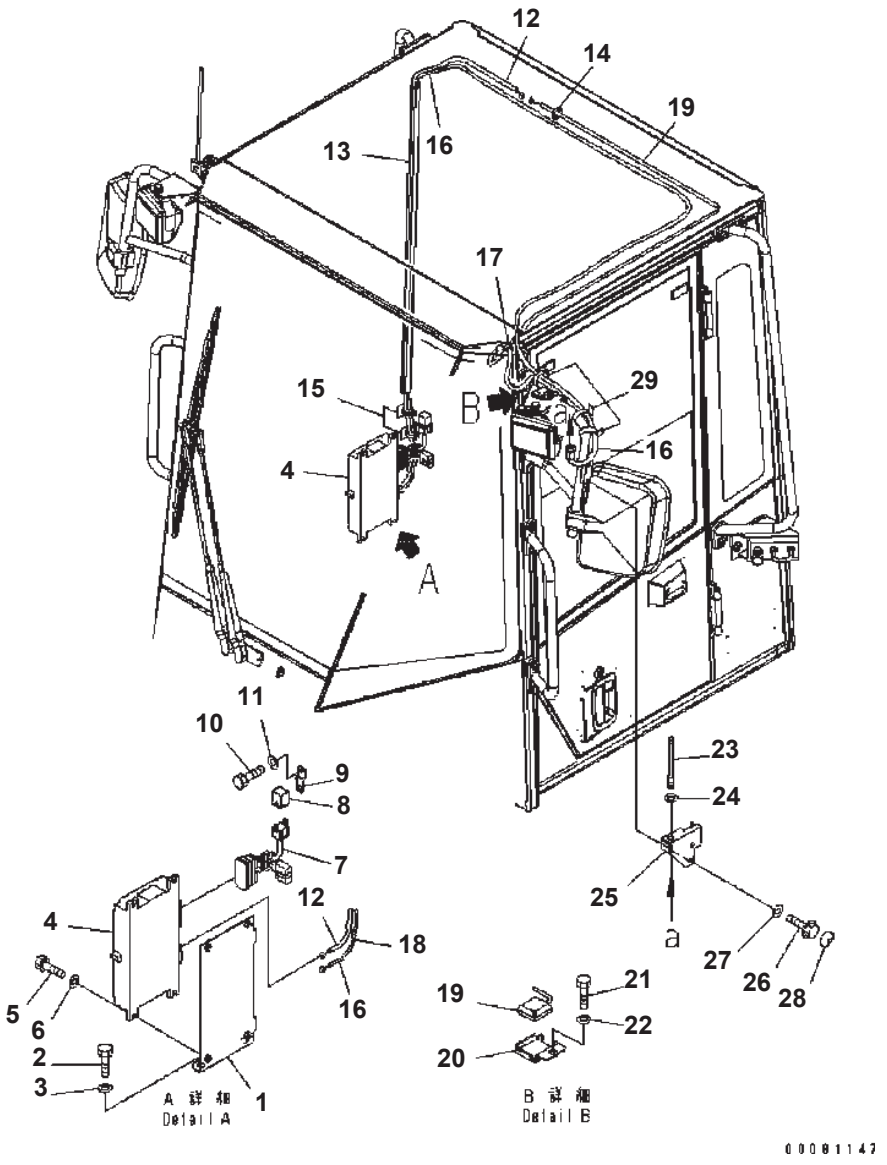

Item	Part No.	Description	Qty	Options
1	419-54-32681	BRACKET	1	SN:B10001--
2	01010-80816	BOLT	4	SN:B10021--
3	01643-30823	WASHER	4	SN:B10001--
4	7826-20-7038	CONTROLLER, TC301	1	SN:B10553--
	□7826-20-7037	CONTROLLER, TC301	1	SN:B10279--B10552
	□7826-20-7036	CONTROLLER, TC301	1	SN:B10240--B10278
	□7826-20-7035	CONTROLLER, TC301	1	SN:B10228--B10239
5	01010-80825	BOLT	4	SN:B10001--
6	01643-30823	WASHER	4	SN:B10001--
7	419-06-31393	WIRING HARNESS	1	SN:B10243--
8	569-06-61960	RELAY	1	SN:B10001--
9	287-06-16420	BRACKET	1	SN:B10001--
10	01010-80610	BOLT	1	SN:B10001--
11	01643-30623	WASHER	1	SN:B10001--
12	8A13-10-1410	CABLE	1	SN:B10001--
13	21J-54-14782	DUCT	1	SN:B10001--
14	08034-40521	BAND	5	SN:B10001--
15	08059-00515	CLIP	2	SN:B10243--
16	7826-20-9311	CABLE	1	SN:B10001--
17	08037-10610	GROMMET	1	SN:B10243--
18	08017-C0706	CONDUIT	1	SN:B10243--
19	8A13-10-1320	ANTENNA	1	SN:B10333--
	8A13-10-1310	ANTENNA	1	SN:B10017--B10332
20	423-92-33520	BRACKET	1	SN:B10243--
21	01010-80816	BOLT	1	SN:B10001--
22	01643-30823	WASHER	1	SN:B10001--
23	8A13-10-2100	ANTENNA	1	SN:B10001--
24	01640-21626	WASHER	1	SN:B10243--
25	421-925-3180	COVER	1	SN:B10001--
26	01435-01020	BOLT	2	SN:B10001--
27	01643-31032	WASHER	2	SN:B10001--
28	363-54-31450	CAP	2	SN:B10001--
29	08034-40521	BAND	3	SN:B10243--

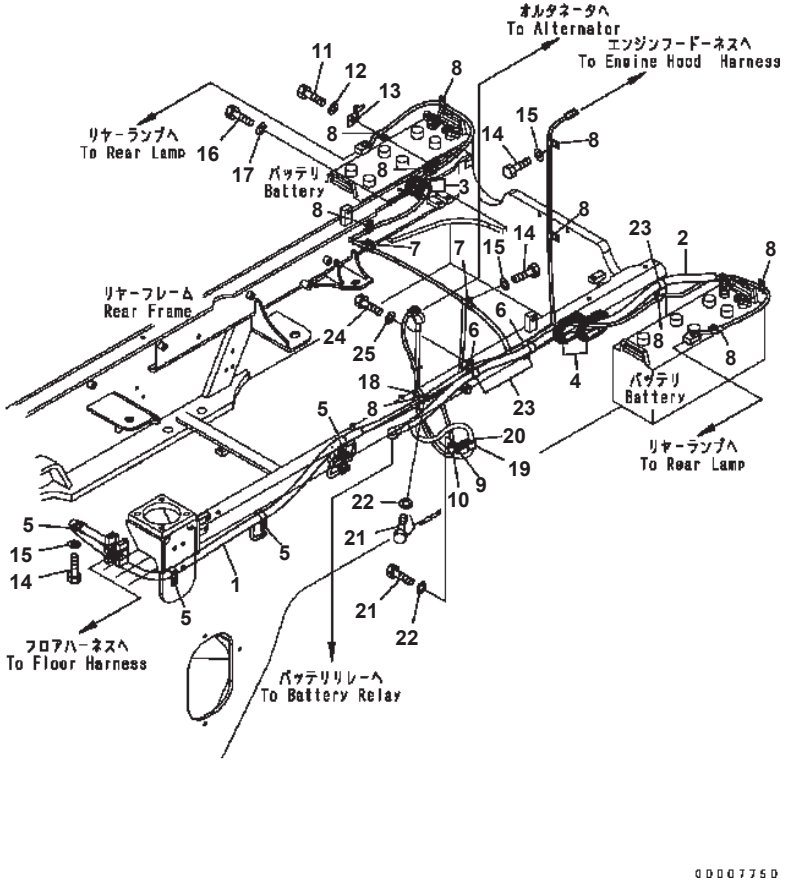

REAR HARNESS (1/4) (MAIN HARNESS)

Item	Part No.	Description	Qty	Options
1	419-06-32345	WIRING HARNESS	1	SN:B10001--
2	419-06-32242	CABLE	1	SN:B10001--
3	08037-03620	GROMMET	2	SN:B10001--
4	22U-54-13260	GROMMET	2	SN:B10001--
5	04434-52312	CLIP	4	SN:B10001--
6	04434-51812	CLIP	2	SN:B10001--
7	04434-51512	CLIP	2	SN:B10001--
8	04434-51012	CLIP	10	SN:B10001--
9	04434-51712	CLIP	1	SN:B10001--
10	07095-20211	CUSHION	1	SN:B10001--
11	01010-81020	BOLT	1	SN:B10001--
12	01643-31032	WASHER	1	SN:B10001--
13	08193-21012	CLIP	1	SN:B10001--
14	01010-81020	BOLT	11	SN:B10001--
15	01643-31032	WASHER	11	SN:B10001--
16	01010-81016	BOLT	2	SN:B10001--
17	01643-31032	WASHER	2	SN:B10001--
18	04434-51412	CLIP	1	SN:B10001--
19	04434-52112	CLIP	1	SN:B10001--
20	07095-20314	CUSHION	1	SN:B10001--
21	01010-81020	BOLT	2	SN:B10001--
22	01643-31032	WASHER	2	SN:B10001--
23	04434-52312	CLIP	3	SN:B10001--
24	01010-81020	BOLT	3	SN:B10001--
25	01643-31032	WASHER	3	SN:B10001--

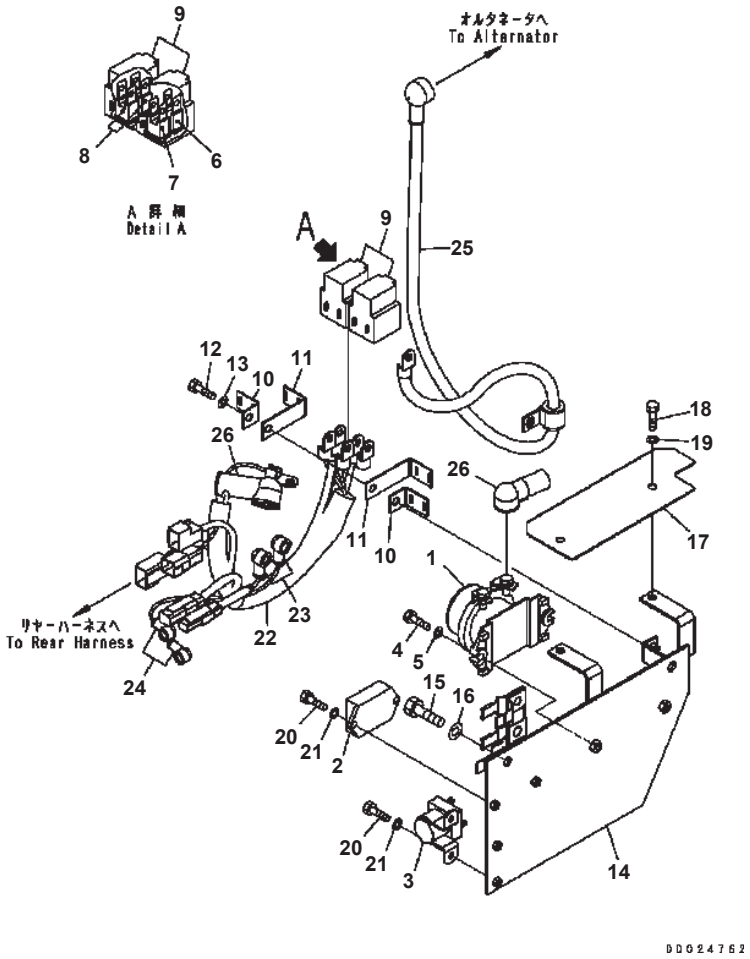

WA320-5 S/N B10001-UP

REAR HARNESS (2/4) (RELAY, FUSE AND SUB HARNESS)

Item	Part No.	Description	Qty	Options
1	08088-30000	SWITCH	1	SN:B10001--
2	600-815-9270	TIMER	1	SN:B10001--
3	600-815-7870	RELAY	1	SN:B10001--
4	01010-80830	BOLT	2	SN:B10001--
5	01643-30823	WASHER	2	SN:B10001--
6	421-06-22830	FUSE¤ 120A	1	SN:B10001--
7	421-06-22820	FUSE¤ 80A	1	SN:B10001--
8	421-06-22840	FUSE¤ 30A	2	SN:B10001--
9	421-06-22880	HOLDER	2	SN:B10001--
10	421-06-22910	BRACKET	2	SN:B10001--
11	421-06-22920	BRACKET	2	SN:B10001--
12	01010-80820	BOLT	1	SN:B10001--
13	01643-30823	WASHER	1	SN:B10001--
14	418-06-32414	BRACKET	1	SN:B10001--
15	01010-81025	BOLT	2	SN:B10001--
16	01643-31032	WASHER	2	SN:B10001--
17	418-06-31591	COVER	1	SN:B10001--
18	01010-80816	BOLT	2	SN:B10001--
19	01643-30823	WASHER	2	SN:B10001--
20	01010-80616	BOLT	4	SN:B10001--
21	01643-30623	WASHER	4	SN:B10001--
22	419-06-32332	WIRING HARNESS	1	SN:B10001--
23	08038-00519	CAP	2	SN:B10001--
24	08038-00518	CAP	2	SN:B10001--
25	419-06-32263	WIRING HARNESS	1	SN:B10001--
26	08038-06031	CAP	1	SN:B10001--

Ref. E0202-02A0 Page 120080

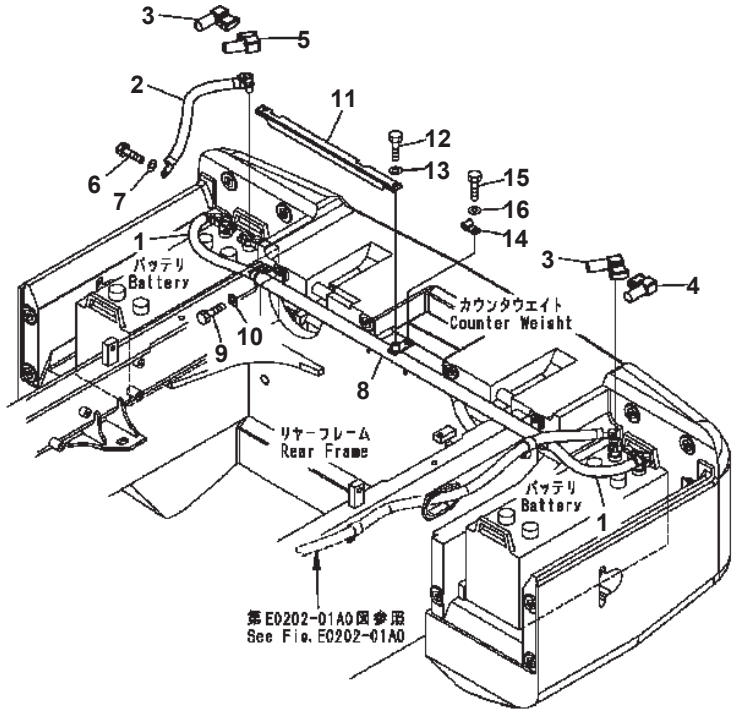

REAR HARNESS (3/4) (BATTERY CABLE)

Item	Part No.	Description	Qty	Options
1	419-06-32230	CABLE	1	SN:B10001--
2	08028-AD045	CABLE	1	SN:B10001--
3	14X-06-12280	COVER	2	SN:B10001--
4	21J-06-11570	COVER	1	SN:B10001--
5	14X-06-12270	COVER	1	SN:B10001--
6	01010-81020	BOLT	1	SN:B10001--
7	01643-31032	WASHER	1	SN:B10001--
8	418-06-31423	PIPE	1	SN:B10532--
	□418-06-31422	PIPE	1	SN:B10001--B10531
9	01010-81020	BOLT	2	SN:B10001--
10	01643-31032	WASHER	2	SN:B10001--
11	418-06-31432	COVER	1	SN:B10001--
12	01010-80816	BOLT	2	SN:B10001--
13	01643-30823	WASHER	2	SN:B10001--
14	04434-51012	CLIP	1	SN:B10001--
15	01010-80820	BOLT	1	SN:B10001--
16	01643-31032	WASHER	1	SN:B10001--

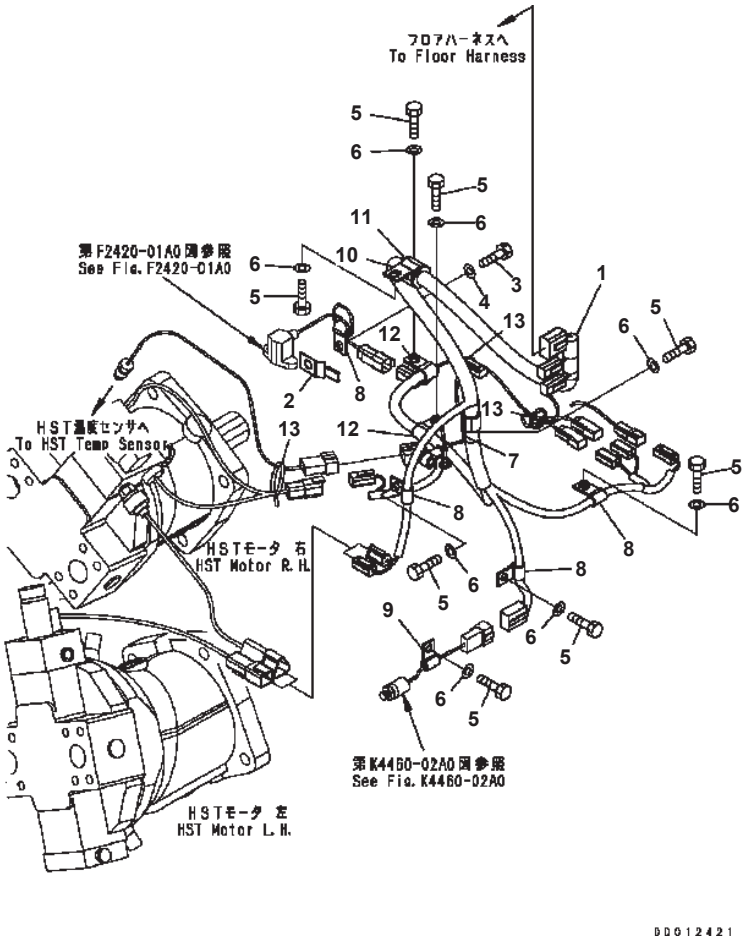

REAR HARNESS (4/4) (HST HARNESS)

Item	Part No.	Description	Qty	Options
1	419-06-32366	WIRING HARNESS	1	SN:B10395--
	□419-06-32365	WIRING HARNESS	1	SN:B10001--B10394
2	08193-21012	CLIP	1	SN:B10001--
3	01010-81220	BOLT	1	SN:B10001--
4	01643-31232	WASHER	1	SN:B10001--
5	01010-81020	BOLT	8	SN:B10001--
6	01643-31032	WASHER	8	SN:B10001--
7	04434-51912	CLIP	1	SN:B10001--
8	04434-51012	CLIP	4	SN:B10001--
9	04435-51012	CLIP	1	SN:B10001--
10	04434-52712	CLIP	1	SN:B10001--
11	07095-20420	CUSHION	1	SN:B10001--
12	04434-51512	CLIP	2	SN:B10001--
13	08034-20414	BAND	3	SN:B10001--

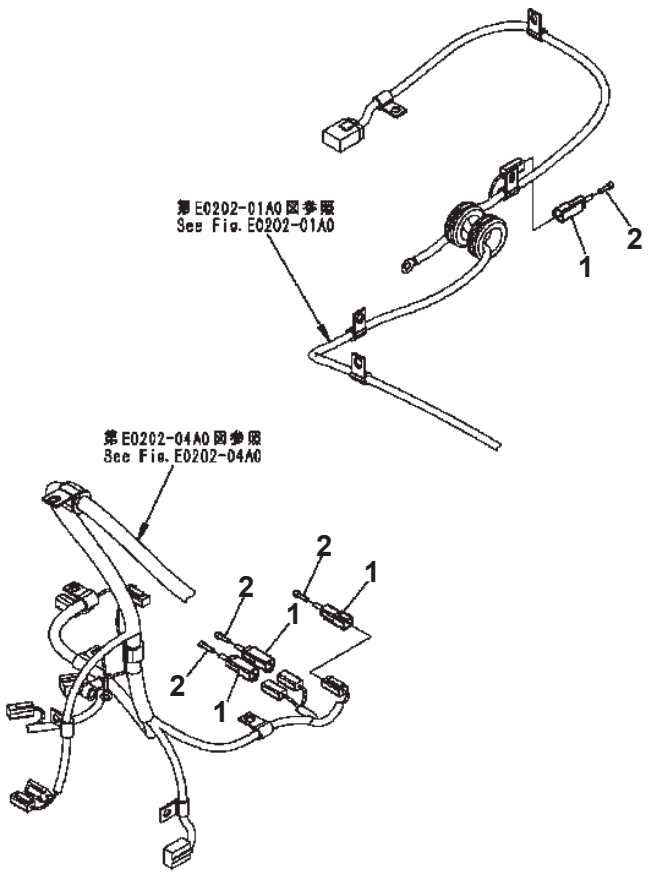

REAR HARNESS (PLUG)

Item	Part No.	Description	Qty	Options
1	08192-22100	CONNECTOR	4	SN:B10001--
2	08191-00770	PLUG	8	SN:B10001--

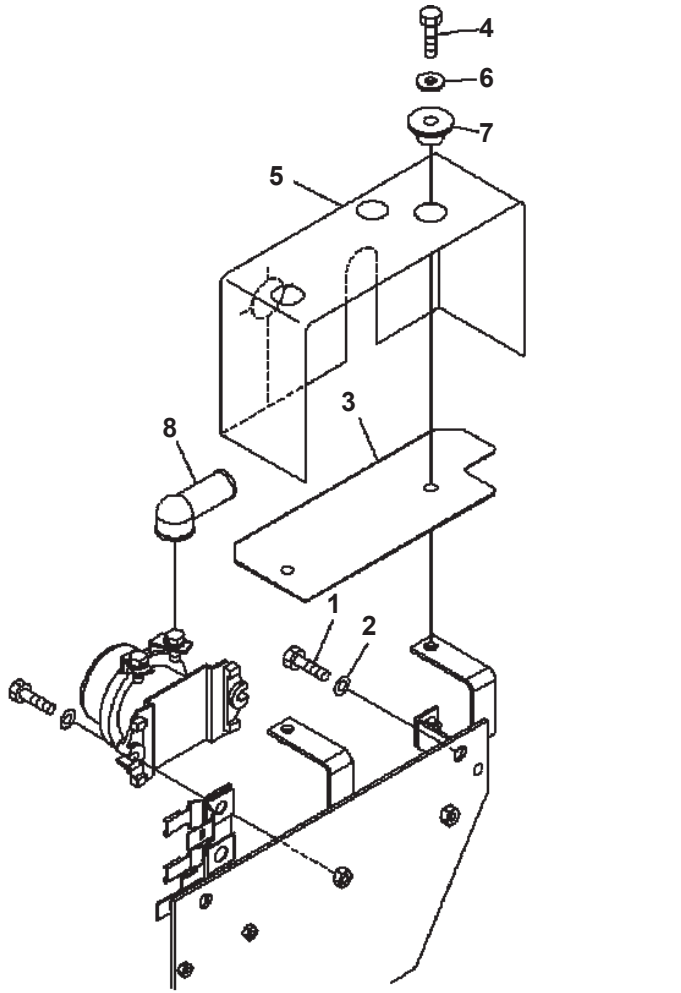

REAR HARNESS (SWITCH MOUNTING PARTS)

Item	Part No.	Description	Qty	Options
1	01010-81025	BOLT	2	SN:B10001--
2	01643-31032	WASHER	2	SN:B10001--
3	418-06-31591	COVER	1	SN:B10001--
4	01010-80825	BOLT	2	SN:B10114--
	01010-80816	BOLT	2	SN:B10001--B10113
5	418-06-31790	SHEET	1	SN:B10114--
6	154-61-16570	WASHER	2	SN:B10114--
	01643-30823	WASHER	2	SN:B10001--B10113
7	203-54-55660	COLLAR	2	SN:B10114--
8	08038-06031	CAP	1	SN:B10001--

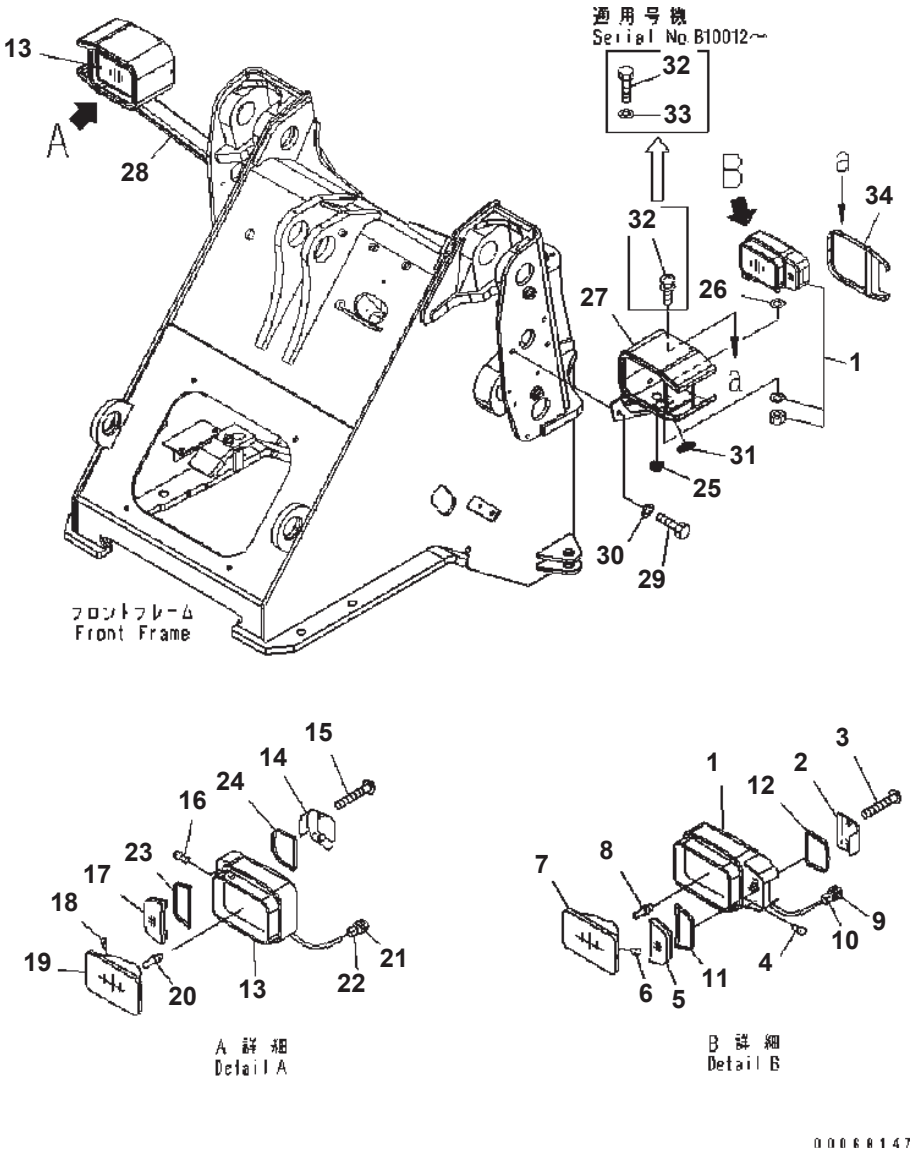

FRONT LIGHT

Item	Part No.	Description	Qty	Options
1	418-06-33212	LAMP, HEAD, L.H.	1	SN:B10001--
2	418-06-33441	· LENS	1	SN:B10001--
3	418-06-33460	· SCREW	1	SN:B10001--
4	418-06-33430	· BULB, 24V5W	1	SN:B10001--
5	418-06-33451	· LENS	1	SN:B10001--
6	418-06-33420	· BULB, 24V5W	1	SN:B10001--
7	418-06-33410	· LAMP	1	SN:B10001--
8	424-06-23230	· BULB, 75/70W	1	SN:B10001--
9	08055-10612	· BODY	1	SN:B10001--
10	08055-10630	· HOLDER	1	SN:B10001--
11	418-06-33470	· GASKET	1	SN:B10001--
12	418-06-33480	· GASKET	1	SN:B10001--
13	418-06-33222	LAMP, HEAD, R.H.	1	SN:B10001--
14	418-06-33441	· LENS	1	SN:B10001--
15	418-06-33460	· SCREW	1	SN:B10001--
16	418-06-33430	· BULB, 24V5W	1	SN:B10001--
17	418-06-33451	· LENS	1	SN:B10001--
18	418-06-33420	· BULB, 24V5W	1	SN:B10001--
19	418-06-33410	· LAMP	1	SN:B10001--
20	424-06-23230	· BULB, 75/70W	1	SN:B10001--
21	08055-10612	· BODY	1	SN:B10001--
22	08055-10630	· HOLDER	1	SN:B10001--
23	418-06-33470	· GASKET	1	SN:B10001--
24	418-06-33480	· GASKET	1	SN:B10001--
25	207-54-16860	GROMMET	2	SN:B10001--
26	209-09-11340	WASHER	2	SN:B10001--
27	419-06-33210	SUPPORT, L.H.	1	SN:B10001--
28	419-06-33220	SUPPORT, R.H.	1	SN:B10001--
29	01010-81230	BOLT	6	SN:B10001--
30	01643-31232	WASHER	6	SN:B10001--
31	09415-03614	CAP	2	SN:B10001--
32	01010-80612	BOLT	8	SN:B10012--
	01023-10612	SCREW	8	SN:B10001--B10011
33	01643-30623	WASHER	8	SN:B10012--
34	418-06-33191	PLATE	2	SN:B10001--

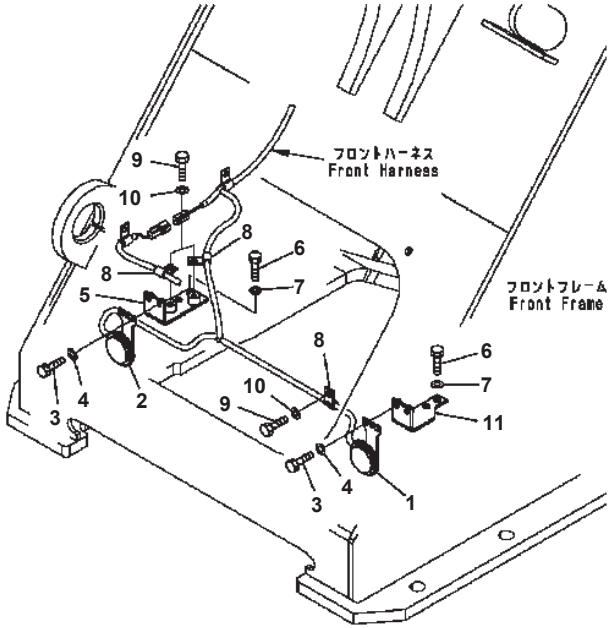

HORN

Item	Part No.	Description	Qty	Options
1	08160-72400	HORN {L.H.}	1	SN:B10001--
2	08160-72420	HORN {R.H.}	1	SN:B10001--
3	01010-80820	BOLT	4	SN:B10001--
4	01643-30823	WASHER	4	SN:B10001--
5	419-06-31411	BRACKET	1	SN:B10001--
6	01010-81025	BOLT	4	SN:B10001--
7	01643-31032	WASHER	4	SN:B10001--
8	04434-51012	CLIP	4	SN:B10001--
9	01010-81020	BOLT	4	SN:B10001--
10	01643-31032	WASHER	4	SN:B10001--
11	419-06-31420	BRACKET	1	SN:B10001--

TRANSMISSION

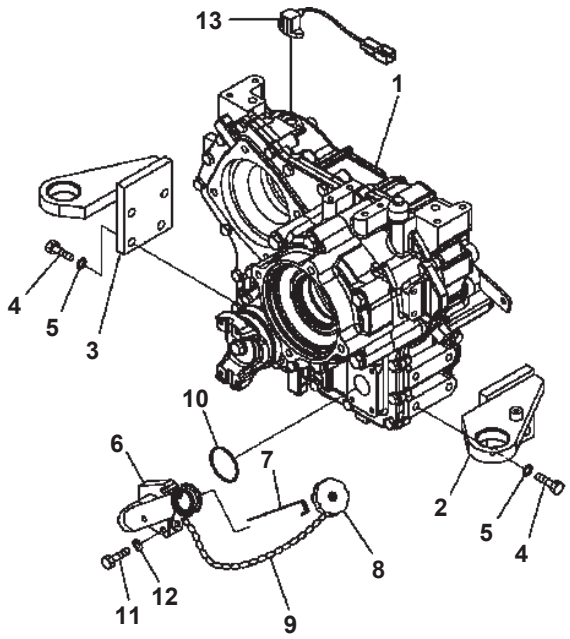

00007757

TRANSFER MOUNT

Item	Part No.	Description	Qty	Options
1	(419-17-31003)	TRANSFER ASS'Y	1	SN:B10106--
	(419-17-31002)	TRANSFER ASS'Y	1	SN:B10001--B10105
2	419-14-31110	BRACKET	1	SN:B10001--
3	419-14-31120	BRACKET	1	SN:B10001--
4	01010-81650	BOLT	8	SN:B10001--
5	01643-31645	WASHER	8	SN:B10001--
6	418-18-32112	TUBE	1	SN:B10001--
7	419-18-32241	GAUGE	1	SN:B10106--
	419-18-32240	GAUGE	1	SN:B10001--B10105
8	6136-21-7120	CAP ASS'Y	1	SN:B10001--
	6136-21-7180	· GASKET	1	SN:B10001--
9	6136-21-7190	CHAIN	1	SN:B10001--
10	07000-A2065	O-RING	1	SN:B10001--
11	01010-81045	BOLT	3	SN:B10001--
12	01643-31032	WASHER	3	SN:B10001--
13	418-18-31502	SENSOR	1	SN:B10106--
	418-18-31501	SENSOR	1	SN:B10001--B10105

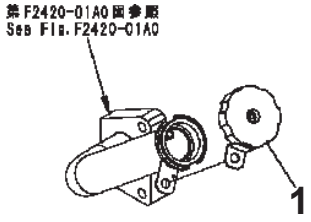

00026392

TRANSFER CAP

Item	Part No.	Description	Qty	Options
1	417-979-2110	CAP	1	SN:B10001--
	6136-21-7180	・ GASKET	1	SN:B10001--

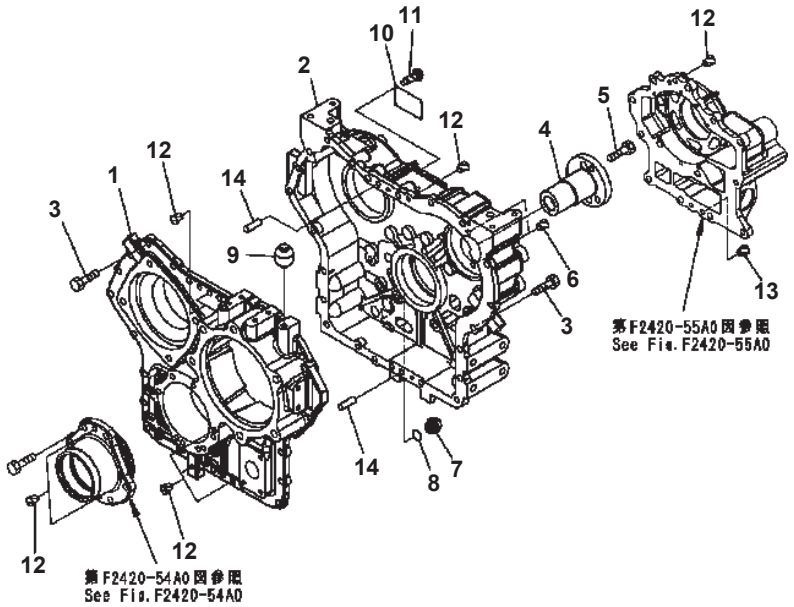

TRANSFER (1/5) (CASE)

Item	Part No.	Description	Qty	Options
	419-17-31003	TRANSFER ASS'Y	1	SN:B10106--
	419-17-31002	TRANSFER ASS'Y	1	SN:B10001--B10105
		THESE ASSEMBLIES CONSIST OF ALL PARTS SHOWN IN FIGS.F2420-51A0 TO F2420-55A0.		
	419-17-31103	· CASE ASS'Y	1	SN:B10106--
	419-17-31102	· CASE ASS'Y	1	SN:B10001--B10105
1	419-17-31113	· · CASE {FRONT}	1	SN:B10106--
	419-17-31112	· · CASE {FRONT}	1	SN:B10001--B10105
2	419-17-31122	· · CASE {REAR}	1	SN:B10001--
3	01010-81235	· BOLT	22	SN:B10001--
4	418-17-32811	· SHAFT	1	SN:B10001--
5	01010-81235	· BOLT	3	SN:B10001--
6	07043-A0211	· PLUG	2	SN:B10001--
7	07044-12412	· PLUG	1	SN:B10001--
8	07002-12434	· O-RING	1	SN:B10001--
9	07030-00252	· BREATHER	1	SN:B10001--
10	09608-05080	· PLATE¤ NAME	1	SN:B10001--
11	04418-13060	· SCREW	4	SN:B10001--
12	07049-01215	· PLUG	10	SN:B10001--
13	07049-01620	· PLUG	1	SN:B10001--
14	04020-01228	· PIN {DOWEL}	2	SN:B10001--

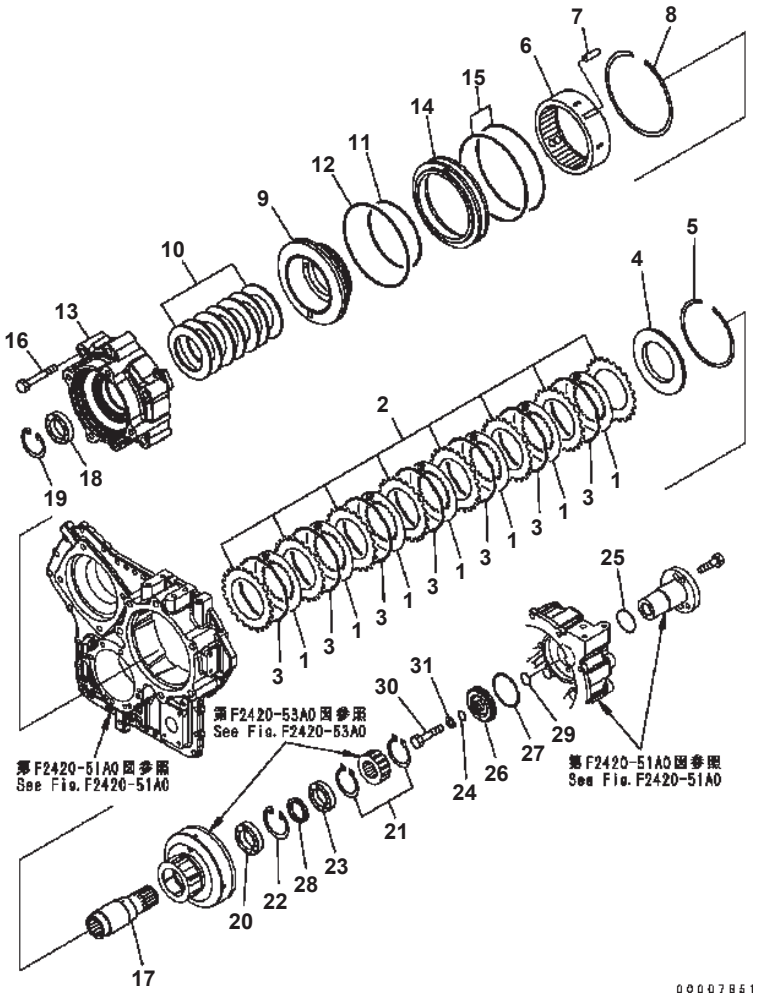

TRANSFER (2/5) (CLUTCH HOUSING)

Item	Part No.	Description	Qty	Options
	(419-17-31003)	TRANSFER ASS'Y	1	SN:B10106--
	(419-17-31002)	TRANSFER ASS'Y	1	SN:B10001--B10105
		THESE ASSEMBLIES CONSIST OF ALL PARTS SHOWN IN FIGS.F2420-51A0 TO F2420-55A0.		
1	418-17-39710	· DISC	7	SN:B10001--
2	714-16-19730	· PLATE {SEPARATE}	8	SN:B10001--
3	419-17-32710	· SPRING {WAVE}	7	SN:B10001--
4	714-12-12610	· PLATE {END}	1	SN:B10001--
5	419-15-12140	· RING {SNAP}	1	SN:B10001--
6	419-17-32620	· HOUSING	1	SN:B10001--
7	04020-01228	· PIN {DOWEL}	3	SN:B10001--
8	04071-00200	· RING	1	SN:B10001--
9	418-17-32713	· PISTON	1	SN:B10001--
10	419-17-32700	· SPRING ASS'Y	1	SN:B10001--
11	07000-A6165	· O-RING	1	SN:B10001--
12	07000-A6210	· O-RING	1	SN:B10001--
13	419-17-31142	· CAGE	1	SN:B10001--
14	418-17-31163	· SPACER	1	SN:B10001--
15	07000-A5220	· O-RING	2	SN:B10001--
16	01011-61605	· BOLT	6	SN:B10001--
17	419-17-32112	· SHAFT	1	SN:B10001--
18	06040-06012	· BEARING	1	SN:B10001--
19	04065-09530	· RING {SNAP}	1	SN:B10001--
20	06040-06010	· BEARING	1	SN:B10001--
21	04064-05020	· RING {SNAP}	2	SN:B10001--
22	04065-08025	· RING {SNAP}	1	SN:B10001--
23	06043-06010	· BEARING	1	SN:B10001--
24	07018-00251	· RING	1	SN:B10001--
25	07000-A2055	· O-RING	1	SN:B10001--
26	419-17-32820	· HOLDER	1	SN:B10001--
27	07018-00904	· RING	1	SN:B10001--
28	712-85-12570	· SPACER	1	SN:B10001--
29	07000-73025	· O-RING	1	SN:B10001--
30	01010-81275	· BOLT	1	SN:B10001--
31	01643-51232	· WASHER	1	SN:B10001--

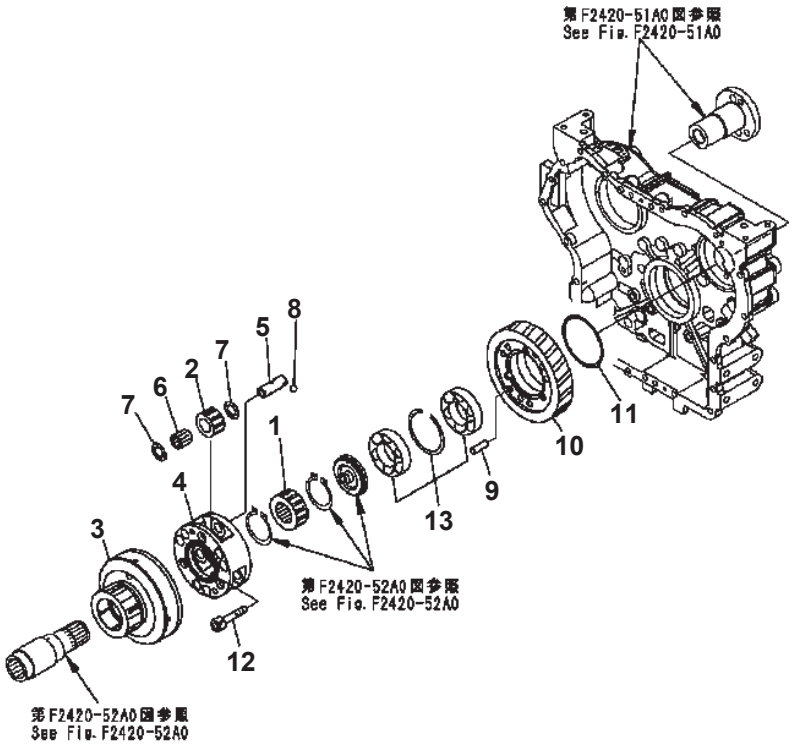

TRANSFER (3/5) (GEAR)

Item	Part No.	Description	Qty	Options
	(419-17-31003)	TRANSFER ASS'Y	1	SN:B10106--
	(419-17-31002)	TRANSFER ASS'Y	1	SN:B10001--B10105
		THESE ASSEMBLIES CONSIST OF ALL PARTS SHOWN IN FIGS.F2420-51A0 TO F2420-55A1.		
1	419-17-32212	· GEAR	1	SN:B10001--
2	23A-15-12410	· GEAR	3	SN:B10001--
3	419-17-32612	· GEAR {RING}	1	SN:B10001--
4	419-17-32312	· CARRIER	1	SN:B10001--
5	419-17-32511	· SHAFT	3	SN:B10001--
6	419-17-39310	· BEARING {NEEDLE}	3	SN:B10001--
7	418-17-32570	· THRUST WASHER	6	SN:B10001--
8	04260-00635	· BALL {STEEL}	3	SN:B10001--
9	04020-01228	· PIN {DOWEL}	2	SN:B10001--
10	419-17-33212	· GEAR	1	SN:B10001--
11	14Y-22-13270	· RING	1	SN:B10001--
12	01252-61470	· BOLT	6	SN:B10001--
13	418-17-39321	· BEARING	1	SN:B10001--

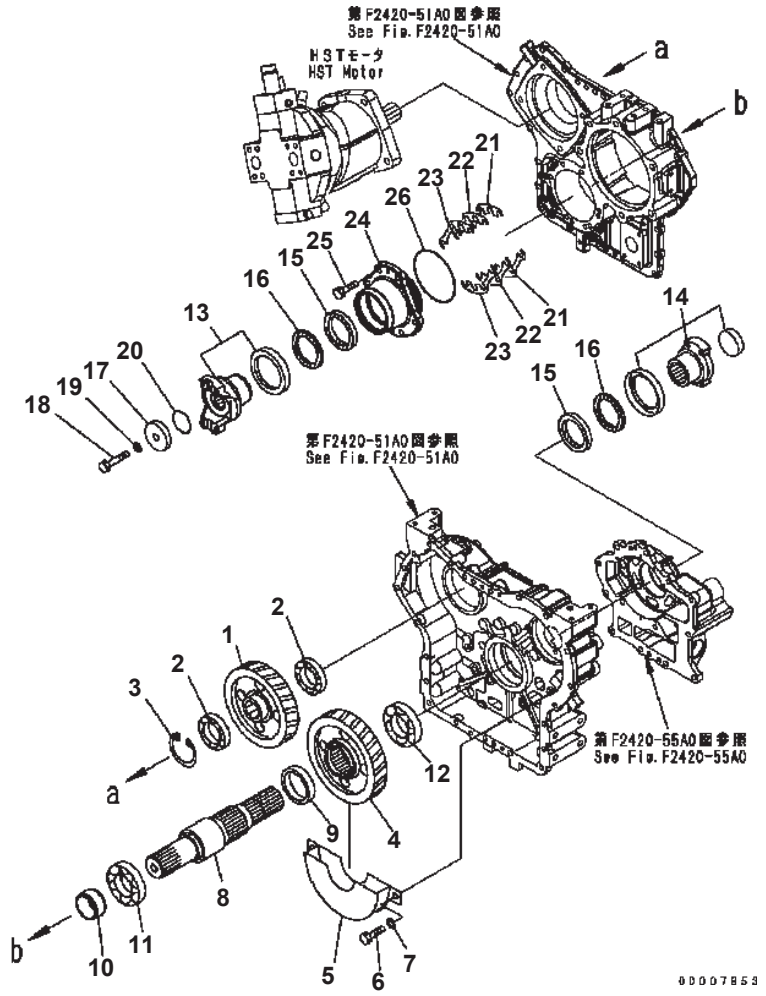

TRANSFER (4/5) (OUTPUT)

Item	Part No.	Description	Qty	Options
	(419-17-31003)	TRANSFER ASS'Y	1	SN:B10106--
	(419-17-31002)	TRANSFER ASS'Y	1	SN:B10001--B10105
		THIS ASSEMBLY CONSISTS OF ALL PARTS SHOWN IN FIGS.F2420-51A0 TO F2420-55A0.		
1	419-17-33221	· GEAR	1	SN:B10001--
2	06040-06213	· BEARING	2	SN:B10001--
3	04065-01204	· RING	1	SN:B10001--
	04065-09530	· RING {SNAP}	1	SN:B10001--
4	419-17-33230	· GEAR {OUTPUT}	1	SN:B10001--
5	419-17-33410	· BUFFLE	1	SN:B10001--
6	01010-81225	· BOLT	2	SN:B10001--
7	01643-31232	· WASHER	2	SN:B10001--
8	419-17-32121	· SHAFT	1	SN:B10001--
9	711-90-11131	· SPACER	1	SN:B10001--
10	417-17-32132	· SPACER	1	SN:B10001--
11	418-17-39330	· BEARING	1	SN:B10001--
12	418-17-39340	· BEARING	1	SN:B10001--
13	418-17-33312	· COUPLING COMPLETE	1	SN:B10001--
14	419-17-33320	· COUPLING COMPLETE	1	SN:B10001--
15	07012-50075	· SEAL {DUST}	2	SN:B10001--
16	419-15-13660	· SEAL {DUST}	2	SN:B10001--
17	423-22-11240	· HOLDER	1	SN:B10001--
18	01010-61680	· BOLT	1	SN:B10001--
19	01643-31645	· WASHER	1	SN:B10001--
20	07000-72055	· O-RING	1	SN:B10001--
21	418-17-33420	· SHIM¤ 0.05MM	6	SN:B10001--
22	418-17-33430	· SHIM¤ 0.20MM	6	SN:B10001--
23	418-17-33440	· SHIM¤ 0.50MM	4	SN:B10001--
24	418-17-31132	· CAGE	1	SN:B10001--
25	01010-81235	· BOLT	6	SN:B10001--
26	07000-75130	· O-RING	1	SN:B10001--

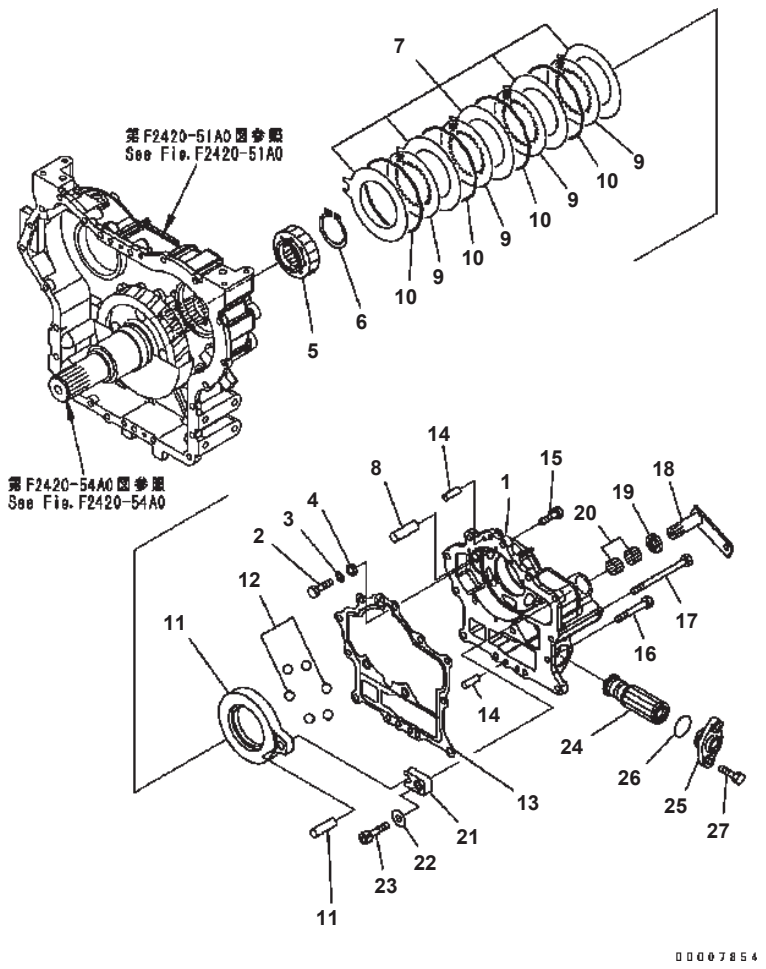

WA320-5 S/N B10001-UP

TRANSFER (5/5) (BRAKE)

Item	Part No.	Description	Qty	Options
	(419-17-31003)	TRANSFER ASS'Y	1	SN:B10106--
	(419-17-31002)	TRANSFER ASS'Y	1	SN:B10001--B10105
		THESE ASSEMBLIES CONSIST OF ALL PARTS SHOWN IN FIGS.F2420-51A0 TO F2420-55A0.		
1	418-17-38115	· HOUSING	1	SN:B10001--
2	01010-80812	· BOLT	2	SN:B10001--
3	01643-30823	· WASHER	2	SN:B10001--
4	418-17-38160	· SPACER	2	SN:B10001--
5	418-17-38210	· HUB {SPLINE}	1	SN:B10001--
6	04064-06020	· RING {SNAP}	1	SN:B10001--
7	418-17-38221	· PLATE	5	SN:B10001--
8	418-17-38170	· PIN	1	SN:B10001--
9	418-17-39710	· DISC	4	SN:B10001--
10	56D-15-12710	· SPRING {WAVE}	4	SN:B10001--
11	418-17-38521	· PISTON ASS'Y	1	SN:B10001--
12	714-11-18340	· BALL	6	SN:B10001--
13	418-17-38134	· GASKET	1	SN:B10001--
14	04020-01228	· PIN {DOWEL}	2	SN:B10001--
15	01010-81235	· BOLT	8	SN:B10001--
16	01010-81285	· BOLT	4	SN:B10001--
17	01011-81255	· BOLT	1	SN:B10001--
18	418-17-38142	· LEVER	1	SN:B10001--
19	714-11-19810	· SEAL {OIL}	1	SN:B10001--
20	06120-02520	· BEARING {BEARING}	2	SN:B10001--
21	418-17-38150	· LEVER	1	SN:B10001--
22	714-09-16282	· WASHER	1	SN:B10001--
23	01252-30816	· BOLT	1	SN:B10001--
24	124-15-51740	· MAGNET ASS'Y	1	SN:B10001--
25	418-17-38120	· COVER	1	SN:B10001--
26	07000-73042	· O-RING	1	SN:B10001--
27	01010-81235	· BOLT	2	SN:B10001--

Ref. F2420-55A0 Page 150070

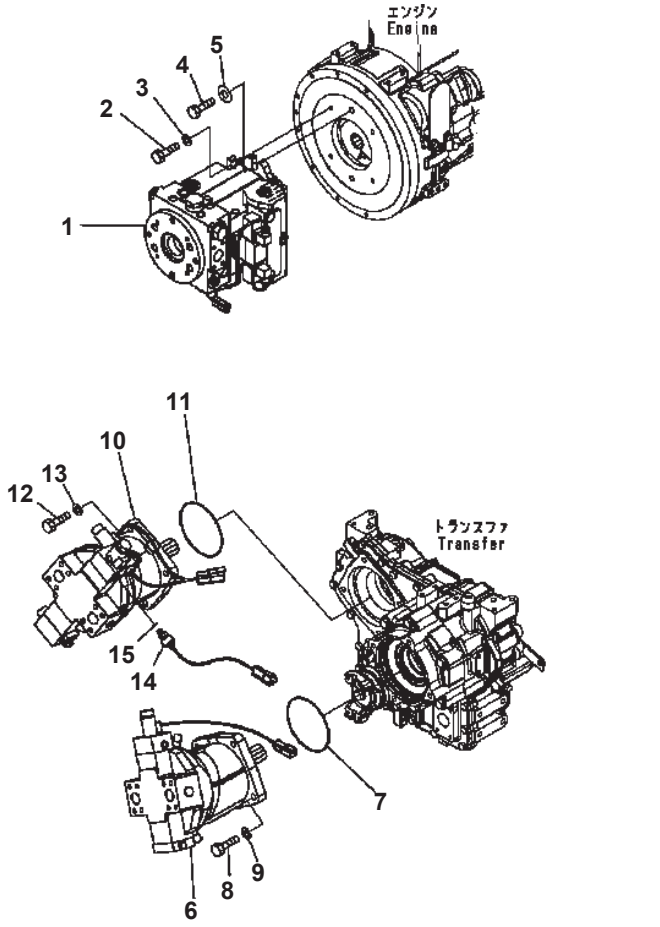

HST PUMP (#B10001-B10348)

Item	Part No.	Description	Qty	Options
1	(419-18-31103)	PUMP	1	SN:B10243--
	(419-18-31102)	PUMP	1	SN:B10001--B10242
2	01010-81240	BOLT	4	SN:B10001--
3	175-54-34170	WASHER	4	SN:B10001--
4	01010-81650	BOLT	2	SN:B10001--
5	418-18-31160	WASHER	2	SN:B10001--
6	(419-18-31201)	MOTOR	1	SN:B10001--
7	07000-A5185	O-RING	1	SN:B10001--
8	01010-81655	BOLT	4	SN:B10001--
9	01643-31645	WASHER	4	SN:B10001--
10	(419-18-31301)	MOTOR	1	SN:B10001--
11	07000-A5185	O-RING	1	SN:B10001--
12	01010-81655	BOLT	4	SN:B10001--
13	01643-31645	WASHER	4	SN:B10001--
14	418-06-36210	SENSOR	1	SN:B10001--
15	07000-12011	・ O-RING	1	SN:B10001--

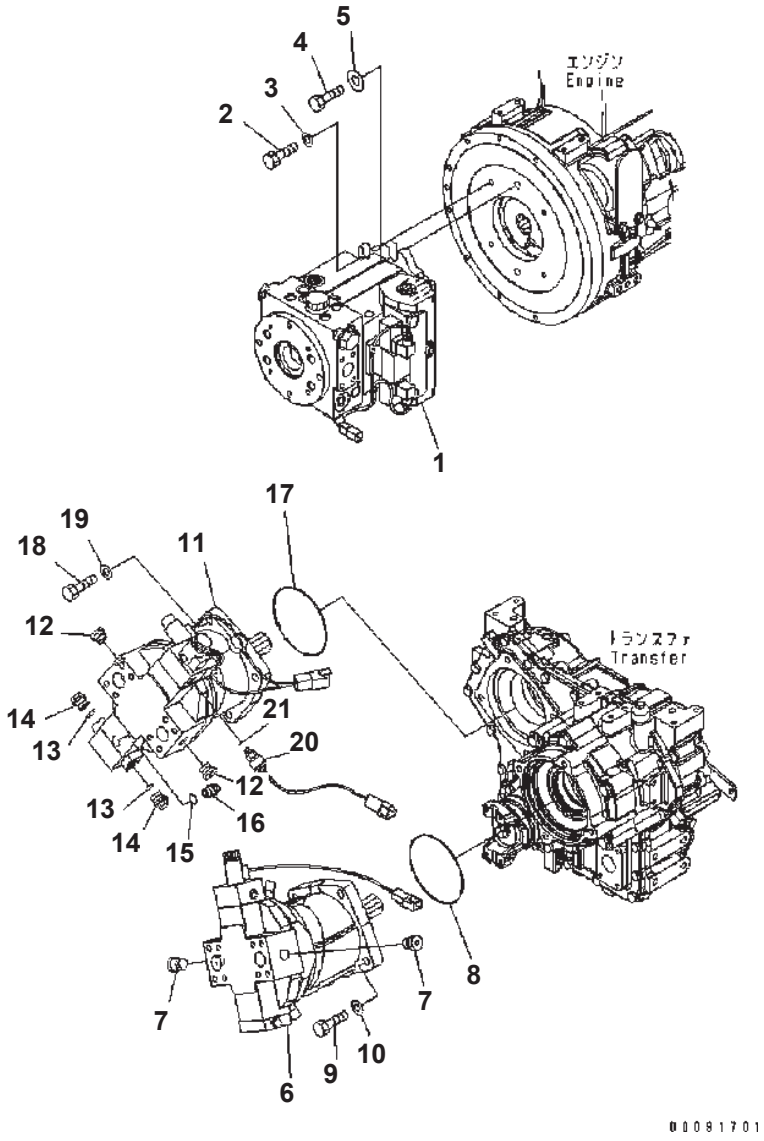

HST PUMP (#B10349-)

Item	Part No.	Description	Qty	Options
1	(419-18-31103)	PUMP	1	SN:B10243--
2	01010-81240	BOLT	4	SN:B10001--
3	175-54-34170	WASHER	4	SN:B10001--
4	01010-81650	BOLT	2	SN:B10001--
5	418-18-31160	WASHER	2	SN:B10001--
6	(419-18-41200)	MOTOR	1	SN:B10349--
7	419-18-41650	・ PLUG	2	SN:B10349--
8	07000-A5185	O-RING	1	SN:B10001--
9	01010-81655	BOLT	4	SN:B10001--
10	01643-31645	WASHER	4	SN:B10001--
11	(419-18-41300)	MOTOR	1	SN:B10349--
12	419-18-41650	・ PLUG	2	SN:B10349--
13	418-18-41450	・ O-RING	2	SN:B10349--
14	418-18-41460	・ PLUG	2	SN:B10349--
15	418-18-41470	・ O-RING	1	SN:B10349--
16	418-18-41480	・ PLUG	1	SN:B10349--
17	07000-A5185	O-RING	1	SN:B10001--
18	01010-81655	BOLT	4	SN:B10001--
19	01643-31645	WASHER	4	SN:B10001--
20	418-06-36210	SENSOR	1	SN:B10001--
21	07000-12011	・ O-RING	1	SN:B10001--

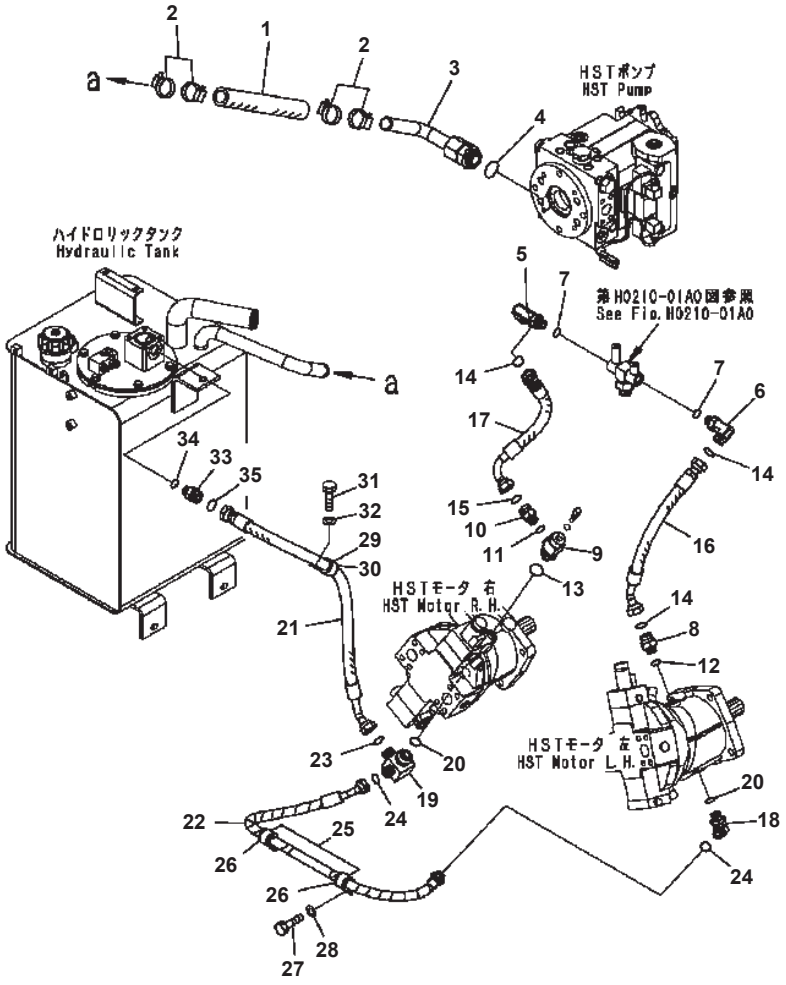

HST OIL LINE (CHARGE LINE)

Item	Part No.	Description	Qty	Options
1	07260-03236	HOSE	1	SN:B10001--
2	07289-00045	CLAMP	4	SN:B10001--
3	419-18-31183	ELBOW	1	SN:B10001--
4	07000-13044	O-RING	1	SN:B10001--
5	02782-10630	ELBOW	1	SN:B10001--
6	02782-1062A	ELBOW	1	SN:B10001--
7	07002-12434	O-RING	2	SN:B10001--
8	418-18-32350	ELBOW	1	SN:B10001--
9	419-18-31282	ELBOW	1	SN:B10001--
10	02781-00628	UNION	1	SN:B10001--
11	07002-62434	O-RING	1	SN:B10001--
12	07000-13024	O-RING	1	SN:B10001--
13	07000-B3024	O-RING	1	SN:B10001--
14	02896-11018	O-RING	3	SN:B10001--
15	02896-61018	O-RING	1	SN:B10001--
16	419-18-32164	HOSE	1	SN:B10001--
17	419-18-32262	HOSE	1	SN:B10001--
18	56B-43-17360	ELBOW	1	SN:B10001--
19	419-18-31252	TEE	1	SN:B10001--
20	07000-13024	O-RING	2	SN:B10001--
21	419-18-32172	HOSE	1	SN:B10001--
22	419-18-32182	HOSE	1	SN:B10001--
23	02896-11018	O-RING	1	SN:B10001--
24	02896-11015	O-RING	2	SN:B10001--
25	04434-53211	CLIP	2	SN:B10001--
26	07095-20523	CUSHION	2	SN:B10001--
27	01010-81020	BOLT	2	SN:B10001--
28	01643-31032	WASHER	2	SN:B10001--
29	04434-53412	CLIP	1	SN:B10001--
30	07095-20627	CUSHION	1	SN:B10001--
31	01010-81025	BOLT	1	SN:B10001--
32	01643-31032	WASHER	1	SN:B10001--
33	02781-00628	UNION	1	SN:B10001--
34	07002-12434	O-RING	1	SN:B10001--
35	02896-11018	O-RING	1	SN:B10001--

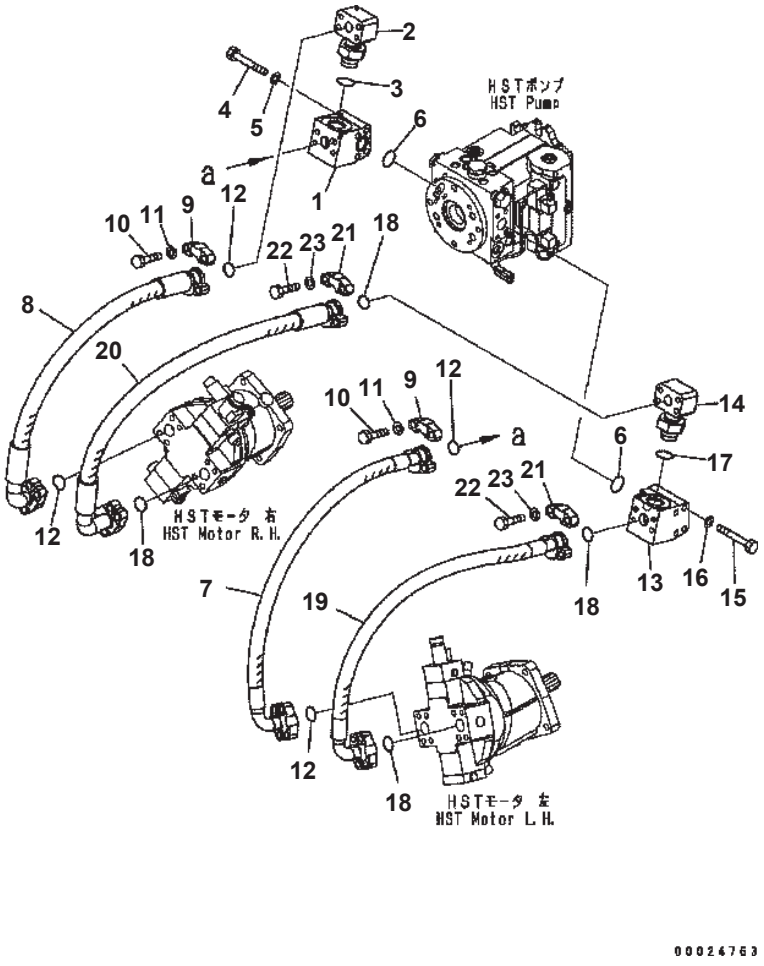

HST OIL LINE (MAIN LINE)

Item	Part No.	Description	Qty	Options
1	419-18-B1120	BLOCK	1	SN:B10017--
	419-18-31121	BLOCK	1	SN:B10001--B10016
2	419-18-31370	ELBOW	1	SN:B10001--
3	07002-14234	O-RING	1	SN:B10001--
4	01011-81420	BOLT	4	SN:B10001--
5	01643-31445	WASHER	4	SN:B10001--
6	07000-13038	O-RING	2	SN:B10001--
7	419-18-32113	HOSE	1	SN:B10001--
8	07084-012A9	HOSE	1	SN:B10001--
9	419-18-31260	FLANGE	8	SN:B10001--
10	01010-81450	BOLT	16	SN:B10001--
11	722-13-11530	WASHER	16	SN:B10001--
12	07000-13038	O-RING	4	SN:B10001--
13	419-18-B1130	BLOCK	1	SN:B10017--
	419-18-31131	BLOCK	1	SN:B10001--B10016
14	419-18-31210	ELBOW	1	SN:B10001--
15	01011-81435	BOLT	4	SN:B10001--
16	01643-31445	WASHER	4	SN:B10001--
17	07002-14234	O-RING	1	SN:B10001--
18	07000-13038	O-RING	4	SN:B10001--
19	419-18-32113	HOSE	1	SN:B10001--
20	419-18-32142	HOSE	1	SN:B10001--
21	419-18-31260	FLANGE	8	SN:B10001--
22	01010-81450	BOLT	16	SN:B10001--
23	722-13-11530	WASHER	16	SN:B10001--

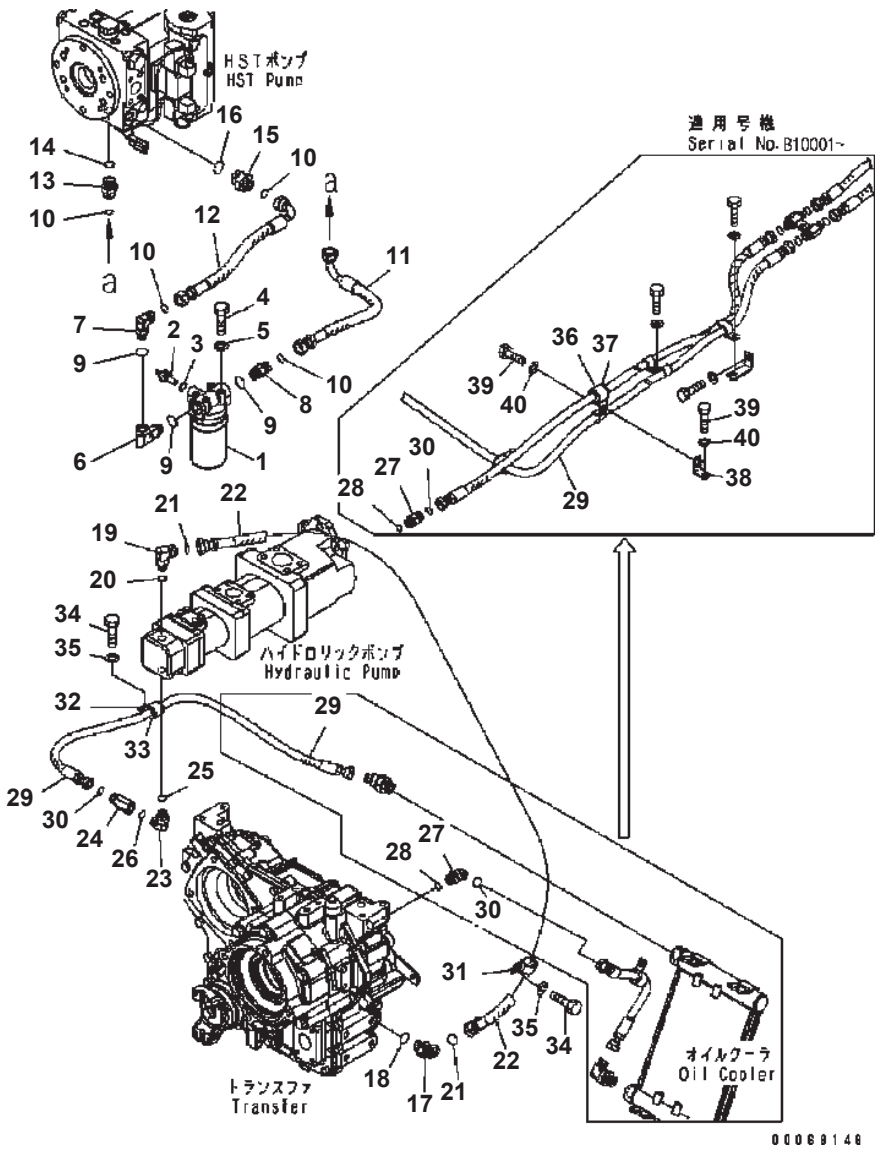

WA320-5 S/N B10001-UP

HST OIL LINE (FILTER AND TRANSFER LINE)

Item	Part No.	Description	Qty	Options
	418-18-34110	FILTER ASS'Y	1	SN:B10001--
1	418-18-34160	· CARTRIDGE	1	SN:B10001--
2	415-18-11150	· SENSOR	1	SN:B10001--
3	415-18-11160	· WASHER	1	SN:B10001--
4	01010-80825	BOLT	4	SN:B10001--
5	01643-30823	WASHER	4	SN:B10001--
6	21W-973-4280	ELBOW	1	SN:B10001--
7	02782-10516	ELBOW	1	SN:B10001--
8	02781-00516	UNION	1	SN:B10001--
9	07002-12034	O-RING	3	SN:B10001--
10	02896-11015	O-RING	4	SN:B10001--
11	419-19-32251	HOSE	1	SN:B10001--
12	419-18-32152	HOSE	1	SN:B10001--
13	56B-43-17781	NIPPLE	1	SN:B10001--
14	07000-13024	O-RING	1	SN:B10001--
15	419-18-31190	NIPPLE	1	SN:B10001--
16	07000-13029	O-RING	1	SN:B10001--
17	02783-10522	ELBOW	1	SN:B10001--
18	07002-22434	O-RING	1	SN:B10001--
19	02782-10516	ELBOW	1	SN:B10001--
20	07002-22034	O-RING	1	SN:B10001--
21	02896-21015	O-RING	2	SN:B10001--
22	419-18-32194	HOSE, 1180MM	1	SN:B10001--
23	02782-10420	ELBOW	1	SN:B10001--
24	419-18-31430	UNION	1	SN:B10001--
25	07002-21823	O-RING	1	SN:B10001--
26	02896-21012	O-RING	1	SN:B10001--
27	02781-00422	UNION	1	SN:B10001--
28	07002-22034	O-RING	1	SN:B10001--
29	419-14-31261	HOSE	1	SN:B10001--
30	02896-21012	O-RING	2	SN:B10001--
31	04434-52511	CLIP	1	SN:B10001--
32	04434-52712	CLIP	1	SN:B10001--
33	07095-20420	CUSHION	1	SN:B10001--
34	01010-81020	BOLT	2	SN:B10001--
35	01643-31032	WASHER	2	SN:B10001--
36	04434-52712	CLIP	1	SN:B10001--
37	07095-20420	CUSHION	1	SN:B10001--
38	42A-16-11210	PLATE	1	SN:B10001--
39	01010-81020	BOLT	2	SN:B10001--

Ref. F2760-03A0 Page 150110

WA320-5 S/N B10001-UP

HST OIL LINE (FILTER AND TRANSFER LINE)

Item	Part No.	Description	Qty	Options
40	01643-31032	WASHER	2	SN:B10001--

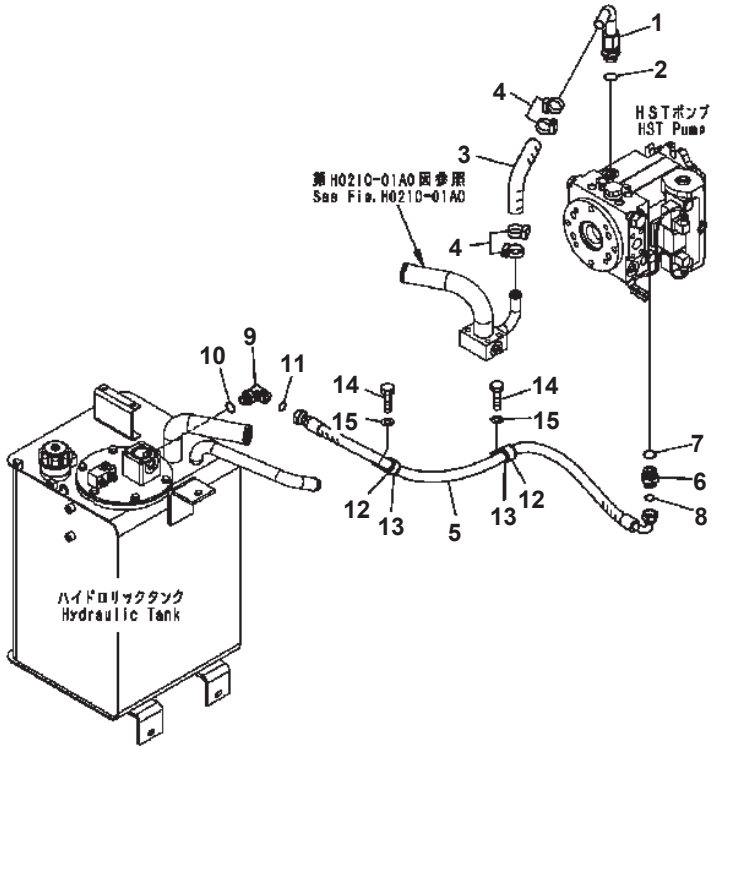

HST OIL LINE (PUMP DRAIN LINE)

Item	Part No.	Description	Qty	Options
1	419-18-31113	ELBOW	1	SN:B10001--
2	07000-13029	O-RING	1	SN:B10001--
3	419-18-31141	HOSE	1	SN:B10001--
4	07289-00045	CLAMP	4	SN:B10001--
5	419-18-31411	HOSE	1	SN:B10001--
6	419-18-31381	NIPPLE	1	SN:B10001--
7	07000-13029	O-RING	1	SN:B10001--
8	02896-11018	O-RING	1	SN:B10001--
9	02782-10628	ELBOW	1	SN:B10001--
10	07002-12434	O-RING	1	SN:B10001--
11	02896-11018	O-RING	1	SN:B10001--
12	04434-53412	CLIP	2	SN:B10001--
13	07095-20627	CUSHION	2	SN:B10001--
14	01010-81020	BOLT	2	SN:B10001--
15	01643-31032	WASHER	2	SN:B10001--

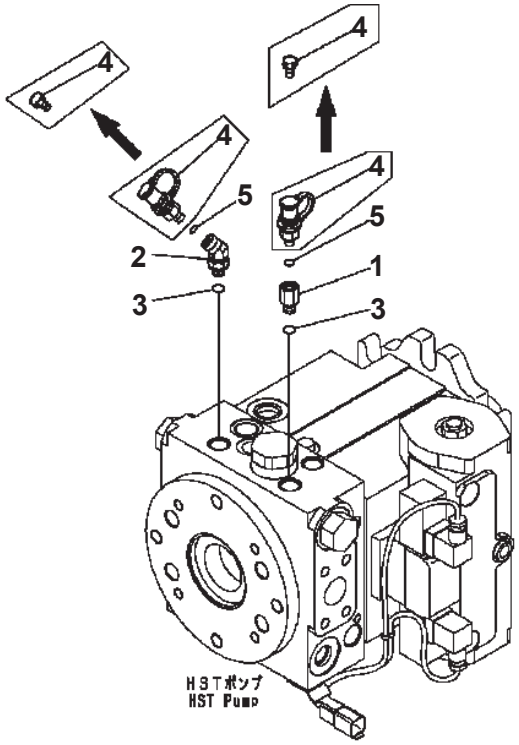

00007764

HST OIL LINE (QUICK COUPLER LINE)

Item	Part No.	Description	Qty	Options
1	419-62-31712	JOINT	1	SN:B10581--
	□419-62-31711	JOINT	1	SN:B10368--B10580
	□419-62-31710	JOINT	1	SN:B10001--B10367
2	419-62-31681	ELBOW	1	SN:B10581--
	□419-62-31680	ELBOW	1	SN:B10001--B10580
3	07000-12011	O-RING	2	SN:B10001--
4	07040-11007	PLUG	2	SN:B10228--
	□799-101-5220	NIPPLE	2	SN:B10001--B10227
5	07002-11023	O-RING	2	SN:B10001--

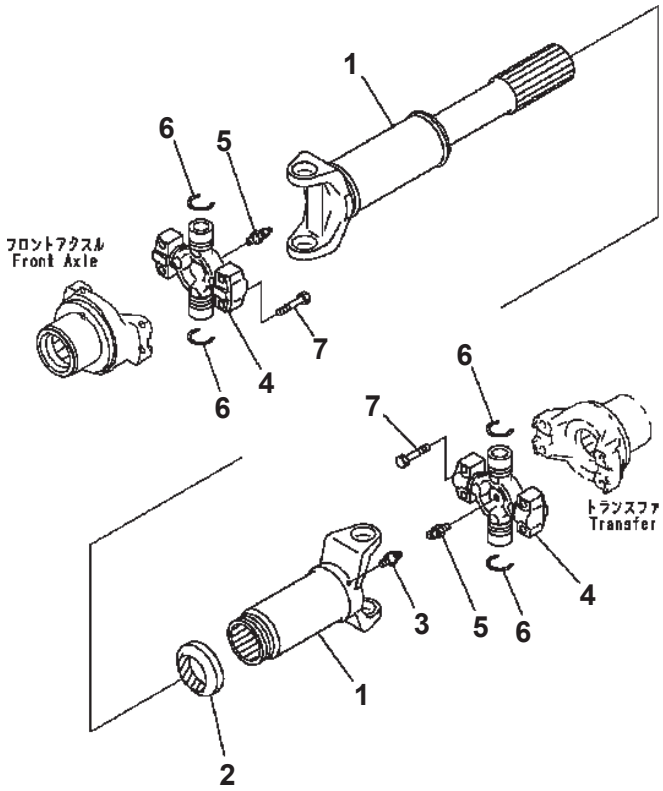

DRIVE SHAFT (FRONT)

Item	Part No.	Description	Qty	Options
	418-20-32190	PROPELLER SHAFT	1	SN:B10001--
1	418-20-32650	・ YOKE AND SHAFT A.	1	SN:B10001--
2	418-20-32740	・・ SEAL	1	SN:B10001--
3	423-20-32750	・・ FITTING	1	SN:B10001--
4	418-20-32620	・ SPIDER	2	SN:B10001--
5	423-20-32631	・・ FITTING	1	SN:B10001--
6	419-20-12691	・・ RING	2	SN:B10001--
7	01050-61045	BOLT	8	SN:B10001--

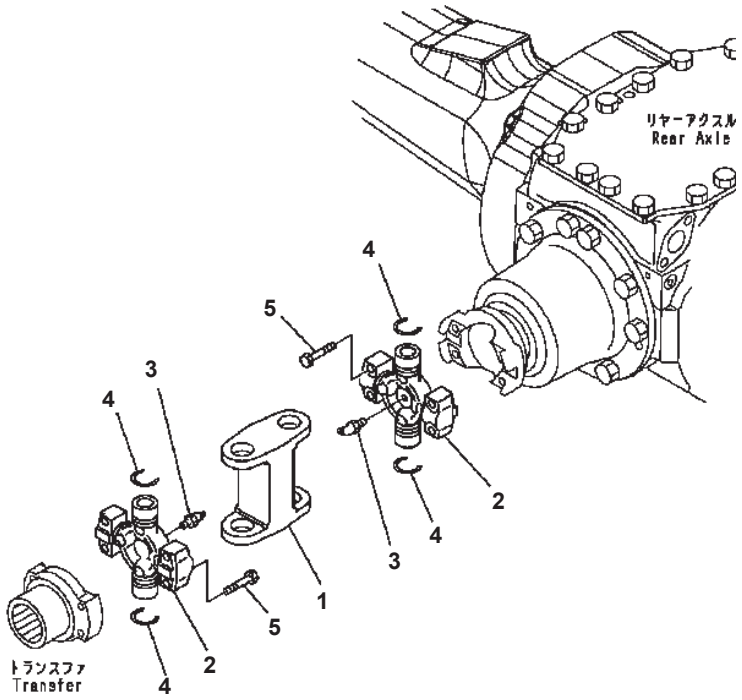

DRIVE SHAFT (REAR)

Item	Part No.	Description	Qty	Options
	419-20-34110	PROPELLER SHAFT	1	SN:B10001--
1	419-20-34650	・ YOKE	1	SN:B10001--
2	418-20-32620	・ SPIDER	2	SN:B10001--
3	423-20-32631	・・ FITTING	1	SN:B10001--
4	419-20-12691	・・ RING	2	SN:B10001--
5	01050-61045	BOLT	8	SN:B10001--

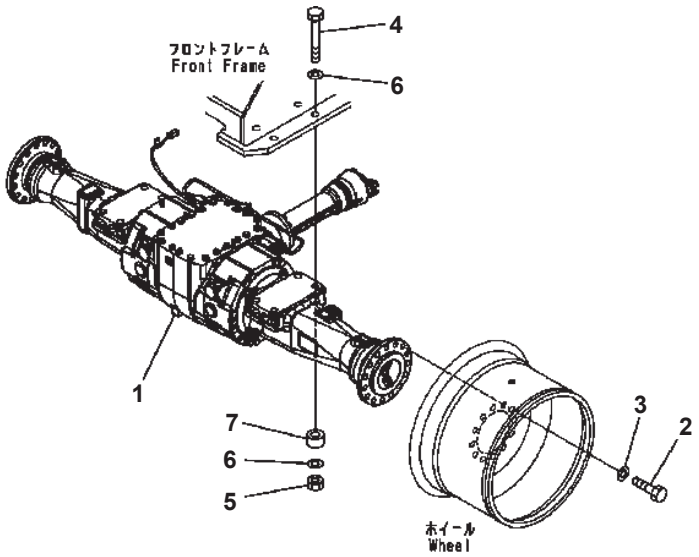

FRONT AXLE MOUNTING

Item	Part No.	Description	Qty	Options
1	(419-22-30010)	AXLE ASS'Y {FRONT}	1	SN:B10001--
2	419-22-12870	BOLT	30	SN:B10001--
3	01643-32460	WASHER	30	SN:B10001--
4	01011-62785	BOLT	8	SN:B10001--
5	01580-02722	NUT	8	SN:B10001--
6	01643-32780	WASHER	16	SN:B10001--
7	419-46-37120	SPACER	8	SN:B10001--

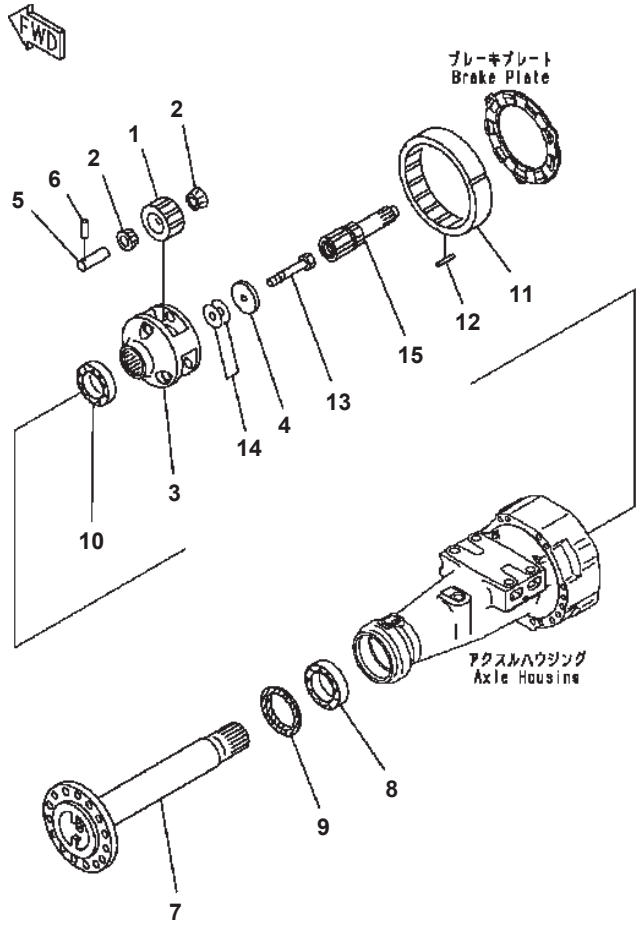

FRONT AXLE (FINAL DRIVE)

Item	Part No.	Description	Qty	Options
	419-22-30010	AXLE ASS'Y {FRONT} THESE ASSEMBLIES CONSIST OF ALL PARTS SHOWN IN FIGS.F4400-51A0 TO F4400-57A0.	1	SN:B10001--
1	419-22-22730	· GEAR	6	SN:B10001--
2	417-22-22810	· BEARING {CONE}	12	SN:B10001--
3	419-22-22810	· CARRIER	2	SN:B10001--
4	419-22-22950	· WASHER	2	SN:B10001--
5	419-22-12510	· SHAFT	6	SN:B10001--
6	419-22-12570	· PIN	6	SN:B10001--
7	419-22-32410	· SHAFT	2	SN:B10001--
8	419-22-22850	· BEARING	2	SN:B10001--
9	419-22-22861	· SEAL {OIL}	2	SN:B10001--
10	418-22-12850	· BEARING	2	SN:B10001--
11	419-22-22741	· GEAR	2	SN:B10001--
12	419-22-22780	· PIN	6	SN:B10001--
13	01011-62000	· BOLT	2	SN:B10001--
14	418-22-21460	· SHIM¤ 0.05MM	4	SN:B10001--
	418-22-21470	· SHIM¤ 0.2MM	4	SN:B10001--
	418-22-21480	· SHIM¤ 0.5MM	4	SN:B10001--
15	419-22-22720	· SHAFT	2	SN:B10001--

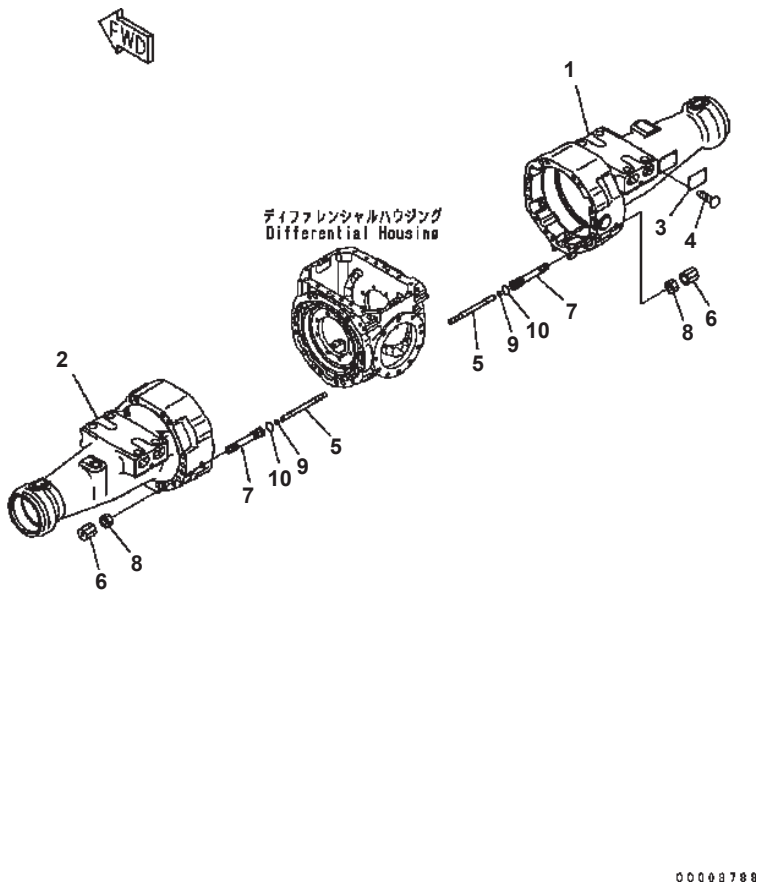

WA320-5 S/N B10001-UP

FRONT AXLE (AXLE HOUSING)

Item	Part No.	Description	Qty	Options
	(419-22-30010)	AXLE ASS'Y {FRONT} THESE ASSEMBLIES CONSIST OF ALL PARTS SHOWN IN FIGS.F4400-51A0 TO F4400-57A0.	1	SN:B10001--
1	419-22-33410	· HOUSING {R.H.}	1	SN:B10001--
2	419-22-33420	· HOUSING {L.H.}	1	SN:B10001--
3	815-02-10110	· PLATE¤ NAME	1	SN:B10001--
4	04418-13060	· SCREW	4	SN:B10001--
5	419-33-31710	· SHAFT	2	SN:B10001--
6	421-33-31730	· CAP	2	SN:B10001--
7	421-33-31721	· GUIDE	2	SN:B10001--
8	01583-11610	· NUT	2	SN:B10001--
9	07000-11005	· O-RING	2	SN:B10001--
10	07000-12018	· O-RING	2	SN:B10001--

Ref. F4400-52A0 Page 150180

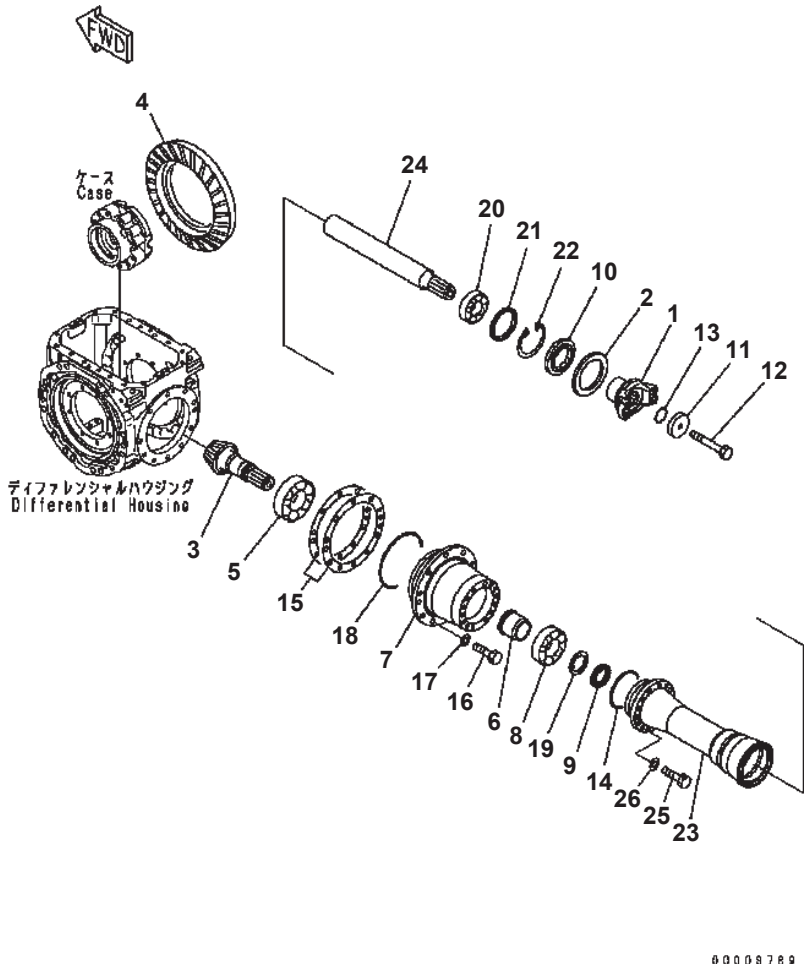

FRONT AXLE (DIFFERENTIAL 1/2)

Item	Part No.	Description	Qty	Options
	(419-22-30010)	AXLE ASS'Y {FRONT} THESE ASSEMBLIES CONSIST OF ALL PARTS SHOWN IN FIGS.F4400-51A0 TO F4400-57A0.	1	SN:B10001--
1	419-22-31230	COUPLING	1	SN:B10001--
	419-22-21230	· COUPLING	1	SN:B10001--
2	418-22-21310	· PROTECTOR	1	SN:B10001--
	419-22-31602	· PINION ASS'Y {GEAR}	1	SN:B10001--
3	☆	· · PINION	1	SN:B10001--
4	☆	· · PINION {BEVEL}	1	SN:B10001--
5	419-22-11810	· BEARING	1	SN:B10001--
6	419-22-31861	· SPACER	1	SN:B10001--
7	419-22-31132	· CAGE	1	SN:B10001--
8	419-22-11820	· BEARING	1	SN:B10001--
9	418-22-31990	· NUT	1	SN:B10001--
10	418-22-21330	· SEAL {OIL}	1	SN:B10001--
11	417-15-13770	· HOLDER	1	SN:B10001--
12	01011-61615	· BOLT	1	SN:B10001--
13	07000-13042	· O-RING	1	SN:B10001--
14	07000-15115	· O-RING	1	SN:B10001--
15	419-22-11361	· SHIM¤ 0.05MM	2	SN:B10001--
	419-22-11371	· SHIM¤ 0.2MM	2	SN:B10001--
	419-22-11381	· SHIM¤ 0.3MM	2	SN:B10001--
16	01010-61440	· BOLT	10	SN:B10001--
17	01643-31445	· WASHER	10	SN:B10001--
18	07000-15180	· O-RING	1	SN:B10001--
19	418-22-31980	· HOLDER	1	SN:B10001--
20	06301-06310	· BEARING	1	SN:B10001--
21	418-22-31970	· RING	1	SN:B10001--
22	04065-01104	· RING {SNAP}	1	SN:B10001--
23	419-22-31890	· CAGE	1	SN:B10001--
24	419-22-31931	· SHAFT	1	SN:B10001--
25	01010-61240	· BOLT	14	SN:B10001--
26	01643-31232	· WASHER	14	SN:B10001--

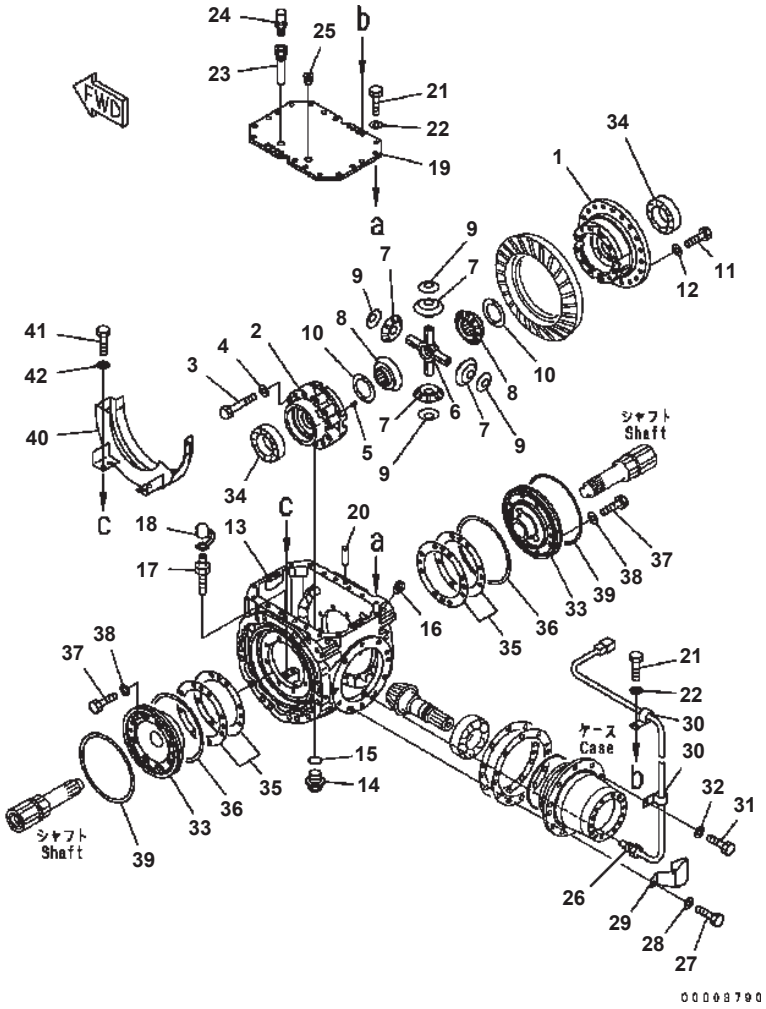

FRONT AXLE (DIFFERENTIAL 2/2)

Item	Part No.	Description	Qty	Options
	(419-22-30010)	AXLE ASS'Y {FRONT} THIS ASSEMBLY CONSISTS OF ALL PARTS SHOWN IN FIGS.F4400-51A0 TO F4400-57A0.	1	SN:B10001--
	419-22-31501	・ CASE ASS'Y	1	SN:B10001--
1	419-22-31511	・・ CASE	1	SN:B10001--
2	419-22-31521	・・ CASE	1	SN:B10001--
3	01010-61295	・・ BOLT	12	SN:B10001--
4	01643-31232	・・ WASHER	12	SN:B10001--
5	175-21-12180	・・ PIN	4	SN:B10001--
6	418-22-31410	・ SPIDER	1	SN:B10001--
7	419-22-11421	・ PINION {SIDE}	4	SN:B10001--
8	419-22-21430	・ GEAR	2	SN:B10001--
9	418-22-31550	・ WASHER	4	SN:B10001--
10	419-22-11631	・ WASHER	2	SN:B10001--
11	01010-61240	・ BOLT	20	SN:B10001--
12	01643-31232	・ WASHER	20	SN:B10001--
13	419-22-33611	・ HOUSING	1	SN:B10001--
14	07044-13620	・ PLUG {DRAIN}	1	SN:B10001--
15	07002-13634	・ O-RING	1	SN:B10001--
16	07043-70211	・ PLUG	2	SN:B10001--
17	419-33-11460	・ BLEEDER	2	SN:B10001--
18	566-32-11620	・ CAP	2	SN:B10001--
19	419-22-33621	・ COVER	1	SN:B10001--
20	04020-01228	・ PIN {DOWEL}	2	SN:B10001--
21	01010-61240	・ BOLT	20	SN:B10001--
22	01643-31232	・ WASHER	20	SN:B10001--
23	419-22-33921	・ CONNECTOR	1	SN:B10001--
24	07030-01030	・ BREATHER	1	SN:B10001--
25	07043-70415	・ PLUG	1	SN:B10001--
26	418-06-35130	・ SENSOR {OIL TEMPERATURE}	1	SN:B10001--
27	01010-61225	・ BOLT	2	SN:B10001--
28	01643-31232	・ WASHER	2	SN:B10001--
29	419-22-33811	・ COVER {SENSOR}	1	SN:B10001--
30	04434-51012	・ CLIP	2	SN:B10001--
31	01010-61225	・ BOLT	1	SN:B10001--
32	01643-31232	・ WASHER	1	SN:B10001--
33	419-22-21861	・ CARRIER	2	SN:B10001--
34	419-22-11850	・ BEARING	2	SN:B10001--
35	419-22-21760	・ SHIM¤ 0.05MM	6	SN:B10001--

WA320-5 S/N B10001-UP

FRONT AXLE (DIFFERENTIAL 2/2)

Item	Part No.	Description	Qty	Options
	419-22-21770	・SHIM¤ 0.2MM	3	SN:B10001--
	419-22-21780	・SHIM¤ 0.3MM	3	SN:B10001--
	419-22-21790	・SHIM¤ 0.8MM	2	SN:B10001--
36	418-33-21430	・RING	2	SN:B10001--
37	01010-61240	・BOLT	16	SN:B10001--
38	01643-31232	・WASHER	16	SN:B10001--
39	419-33-21710	・SEAL	2	SN:B10001--
40	419-22-31710	・COVER {GEAR}	1	SN:B10001--
41	01010-61225	・BOLT	4	SN:B10001--
42	01643-31232	・WASHER	4	SN:B10001--

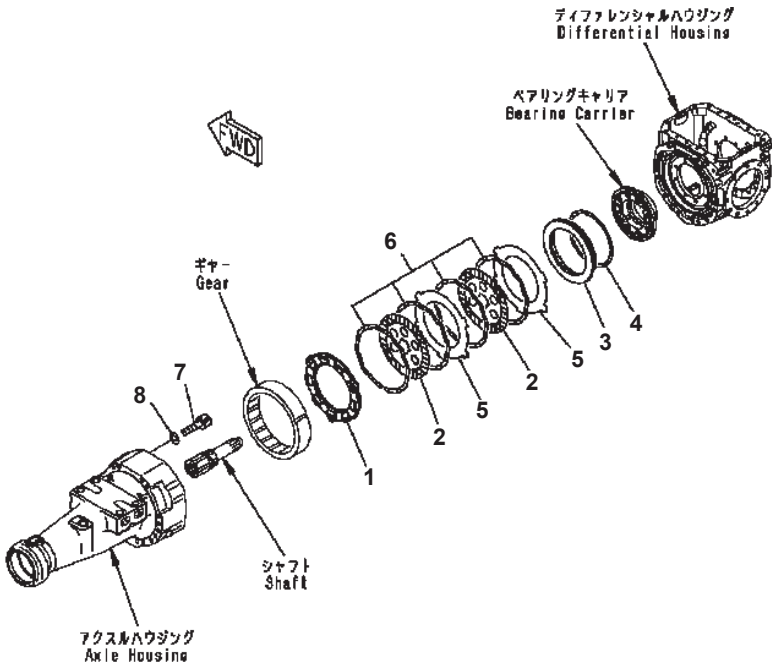

FRONT AXLE (BRAKE)

Item	Part No.	Description	Qty	Options
	(419-22-30010)	AXLE ASS'Y {FRONT} THESE ASSEMBLIES CONSIST OF ALL PARTS SHOWN IN FIGS.F4400-51A0 TO F4400-57A0.	1	SN:B10001--
1	419-33-21761	・ PLATE	2	SN:B10001--
2	418-33-21340	・ DISC	4	SN:B10001--
3	419-33-21720	・ PISTON	2	SN:B10001--
4	419-33-21420	・ SEAL	2	SN:B10001--
5	419-33-31750	・ PLATE	4	SN:B10001--
6	419-33-21740	・ SPRING	8	SN:B10001--
7	01252-30816	・ BOLT	4	SN:B10001--
8	154-61-16570	・ WASHER	4	SN:B10001--

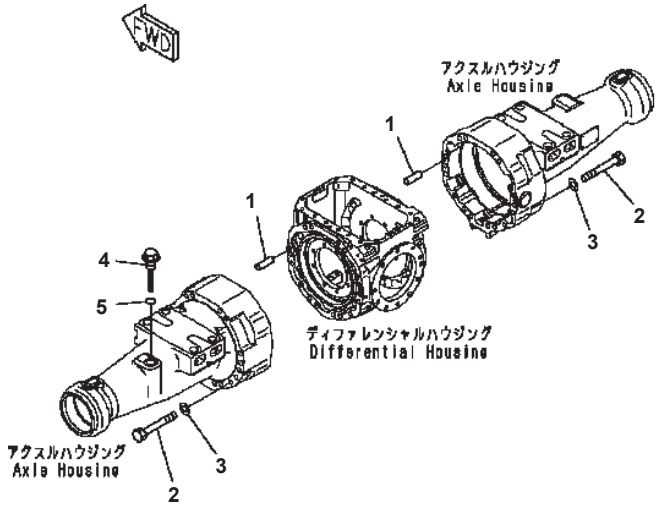

FRONT AXLE (MOUNTING PARTS AND PLUG)

Item	Part No.	Description	Qty	Options
	(419-22-30010)	AXLE ASS'Y {FRONT} THESE ASSEMBLIES CONSIST OF ALL PARTS SHOWN IN FIGS.F4400-51A0 TO F4400-57A0.	1	SN:B10001--
1	04020-01228	・ PIN {DOWEL}	4	SN:B10001--
2	01011-61675	・ BOLT	32	SN:B10001--
3	01643-31645	・ WASHER	32	SN:B10001--
4	419-22-33250	・ PLUG	1	SN:B10001--
5	07002-13034	・ O-RING	1	SN:B10001--

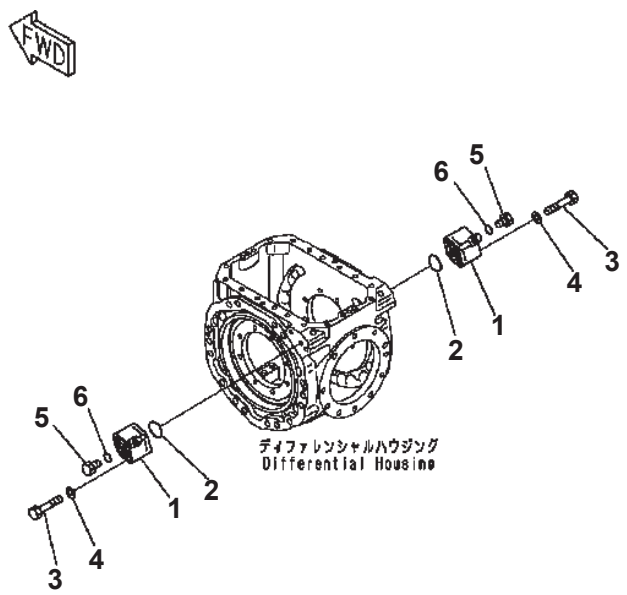

FRONT AXLE (SLACK ADJUSTER MOUNTING)

Item	Part No.	Description	Qty	Options
	(419-22-30010)	AXLE ASS'Y {FRONT} THESE ASSEMBLIES CONSIST OF ALL PARTS SHOWN IN FIGS.F4400-51A0 TO F4400-57A0.	1	SN:B10001--
1	418-43-37302	· VALVE {SLACK ADJUSTER}	2	SN:B10001--
2	07000-12040	· O-RING	2	SN:B10001--
3	01010-61290	· BOLT	4	SN:B10001--
4	01643-31232	· WASHER	4	SN:B10001--
5	07040-11409	· PLUG	2	SN:B10001--
6	07002-11423	· O-RING	2	SN:B10001--

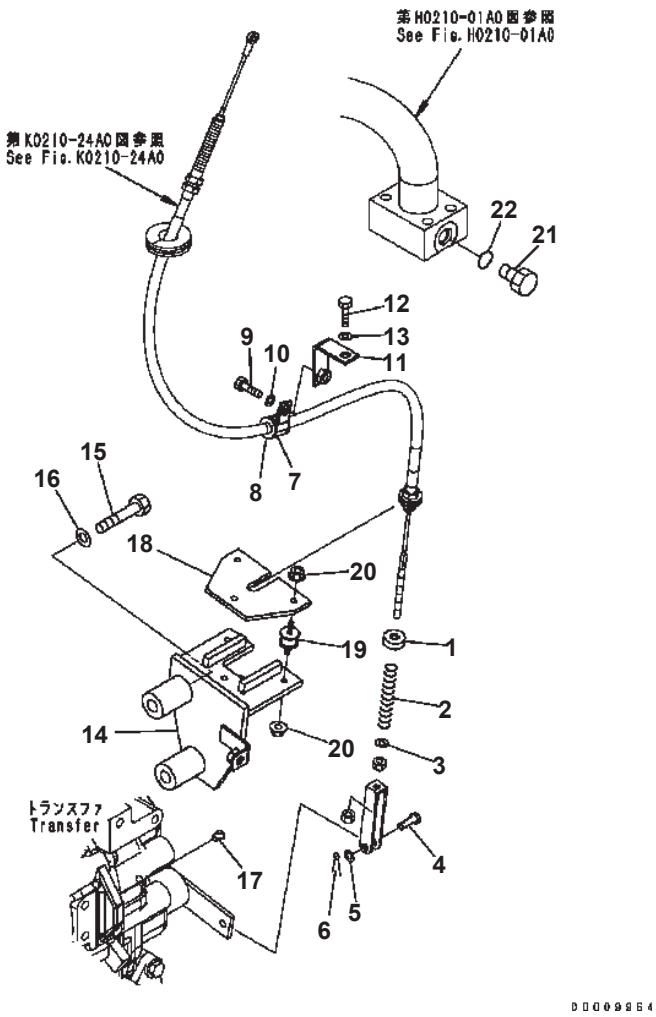

PARKING BRAKE CONTROL

Item	Part No.	Description	Qty	Options
1	417-43-18380	GUIDE	1	SN:B10001--
2	416-22-26260	SPRING	1	SN:B10001--
3	01641-20812	WASHER	1	SN:B10001--
4	04205-11028	PIN	1	SN:B10001--
5	01641-21016	WASHER	1	SN:B10001--
6	04050-13020	PIN	1	SN:B10001--
7	04434-51912	CLIP	1	SN:B10001--
8	07095-20213	CUSHION	1	SN:B10001--
9	01010-81020	BOLT	1	SN:B10001--
10	01643-31032	WASHER	1	SN:B10001--
11	42A-16-11231	PLATE	1	SN:B10001--
12	01010-81020	BOLT	1	SN:B10001--
13	01643-31032	WASHER	1	SN:B10001--
14	419-22-36211	BRACKET	1	SN:B10001--
15	01010-81695	BOLT	2	SN:B10001--
16	01643-31645	WASHER	2	SN:B10001--
17	07049-01620	PLUG	2	SN:B10001--
18	418-22-36190	PLATE	1	SN:B10001--
19	424-43-11240	CUSHION	3	SN:B10001--
20	01584-00605	NUT	6	SN:B10001--
21	07040-12012	PLUG	1	SN:B10001--
22	07002-12034	O-RING	1	SN:B10001--

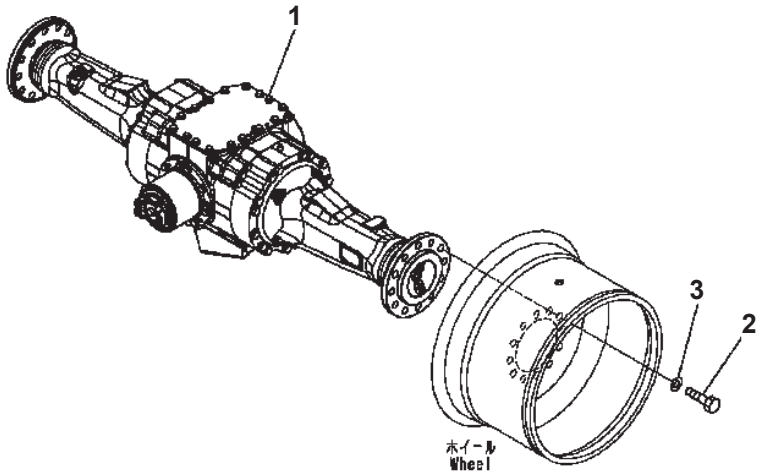

WA320-5 S/N B10001-UP

REAR AXLE MOUNTING

Item	Part No.	Description	Qty	Options
1	(419-23-30010)	AXLE ASS'Y {REAR}	1	SN:B10001--
2	419-22-12870	BOLT	30	SN:B10001--
3	01643-32460	WASHER	30	SN:B10001--

Ref. F4500-01A0 Page 150250

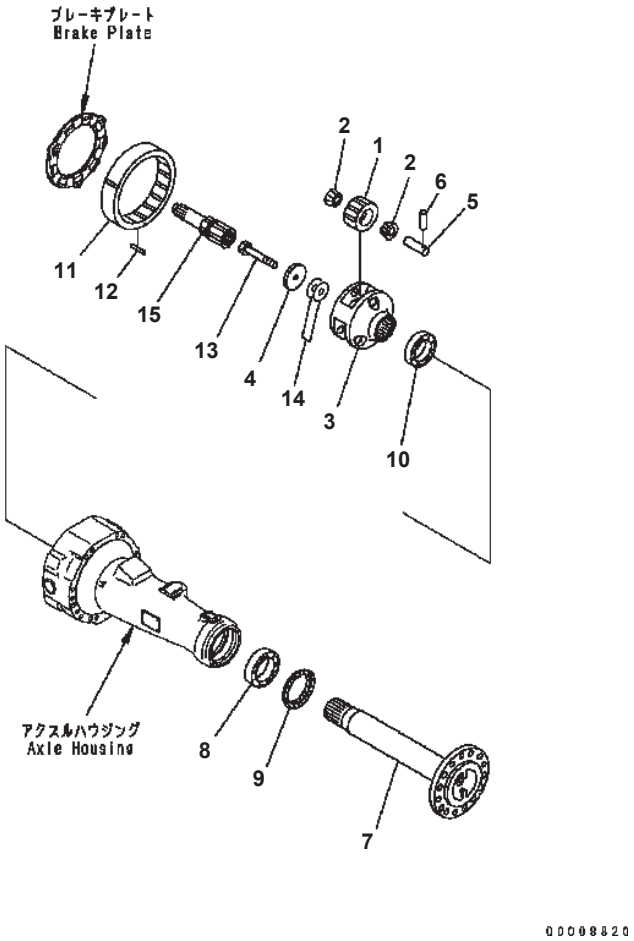

REAR AXLE (FINAL DRIVE)

Item	Part No.	Description	Qty	Options
	419-23-30010	AXLE ASS'Y {REAR} THESE ASSEMBLIES CONSISTS OF ALL PARTS SHOWN IN FIGS.F4500-51A0 TO F4500-57A0.	1	SN:B10001--
1	419-22-22730	· GEAR	6	SN:B10001--
2	417-22-22810	· BEARING {CONE}	12	SN:B10001--
3	419-22-22810	· CARRIER	2	SN:B10001--
4	419-22-22950	· WASHER	2	SN:B10001--
5	419-22-12510	· SHAFT	6	SN:B10001--
6	419-22-12570	· PIN	6	SN:B10001--
7	419-22-32410	· SHAFT	2	SN:B10001--
8	419-22-22850	· BEARING	2	SN:B10001--
9	419-22-22861	· SEAL {OIL}	2	SN:B10001--
10	418-22-12850	· BEARING	2	SN:B10001--
11	419-22-22741	· GEAR	2	SN:B10001--
12	419-22-22780	· PIN	6	SN:B10001--
13	01011-62000	· BOLT	2	SN:B10001--
14	418-22-21460	· SHIM¤ 0.05MM	4	SN:B10001--
	418-22-21470	· SHIM¤ 0.2MM	4	SN:B10001--
	418-22-21480	· SHIM¤ 0.5MM	4	SN:B10001--
15	419-22-22720	· SHAFT	2	SN:B10001--

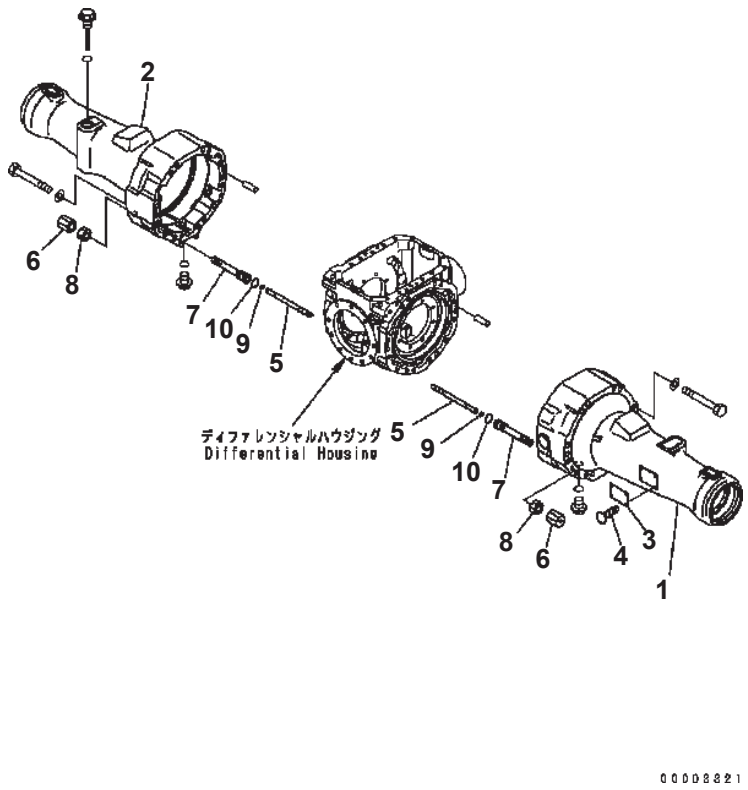

WA320-5 S/N B10001-UP

REAR AXLE (AXLE HOUSING)

Item	Part No.	Description	Qty	Options
	(419-23-30010)	AXLE ASS'Y {REAR} THESE ASSEMBLIES CONSISTS OF ALL PARTS SHOWN IN FIGS.F4500-51A0 TO F4500-57A0.	1	SN:B10001--
1	419-23-33410	・ HOUSING {L.H.}	1	SN:B10001--
2	419-23-33420	・ HOUSING {R.H.}	1	SN:B10001--
3	(815-02-10110)	・ PLATE¤ NAME	1	SN:B10001--
4	04418-13060	・ SCREW	4	SN:B10001--
5	419-33-31710	・ SHAFT	2	SN:B10001--
6	421-33-31730	・ CAP	2	SN:B10001--
7	421-33-31721	・ GUIDE	2	SN:B10001--
8	01583-11610	・ NUT	2	SN:B10001--
9	07000-11005	・ O-RING	2	SN:B10001--
10	07000-12018	・ O-RING	2	SN:B10001--

Ref. F4500-52A0 Page 150270

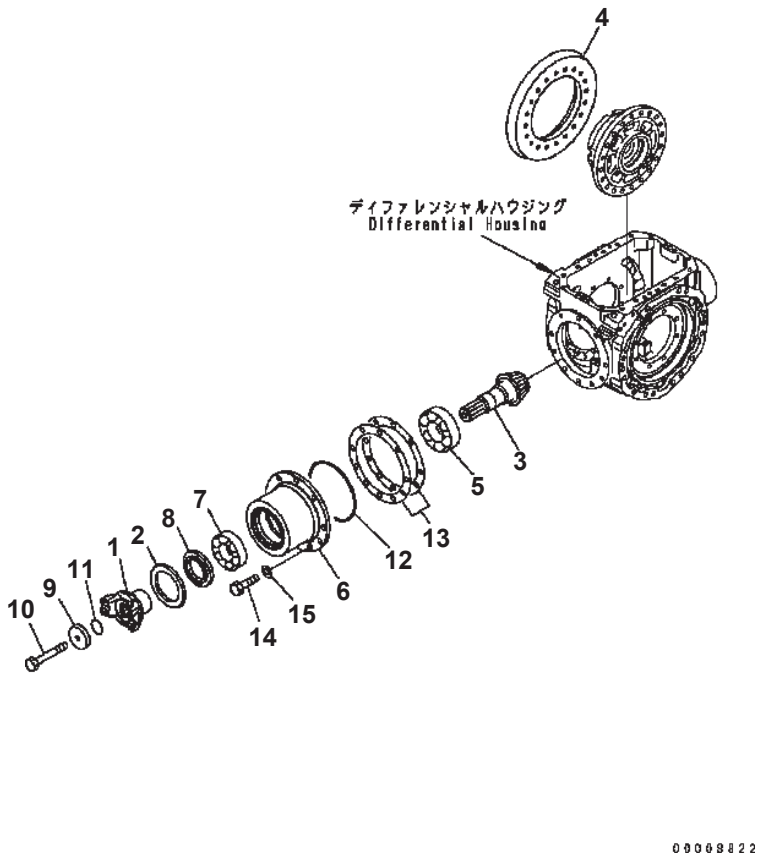

REAR AXLE (DIFFERENTIAL 1/2)

Item	Part No.	Description	Qty	Options
	(419-23-30010)	AXLE ASS'Y {REAR} THESE ASSEMBLIES CONSISTS OF ALL PARTS SHOWN IN FIGS.F4500-51A0 TO F4500-57A0.	1	SN:B10001--
1	419-22-31230	COUPLING	1	SN:B10001--
	419-22-21230	・ COUPLING	1	SN:B10001--
2	418-22-21310	・ PROTECTOR	1	SN:B10001--
	419-22-21800	・ PINION ASS'Y	1	SN:B10001--
3	(☆419-22-21611)	・・ PINION	1	SN:B10001--
4	(☆419-22-21820)	・・ PINION {BEVEL}	1	SN:B10001--
5	419-22-11810	・ BEARING	1	SN:B10001--
6	419-23-21631	・ CAGE	1	SN:B10001--
7	419-22-11820	・ BEARING	1	SN:B10001--
8	418-22-21330	・ SEAL {OIL}	1	SN:B10001--
9	423-22-11240	・ HOLDER	1	SN:B10001--
10	01011-61615	・ BOLT	1	SN:B10001--
11	07000-13042	・ O-RING	1	SN:B10001--
12	07000-15180	・ O-RING	1	SN:B10001--
13	419-22-11361	・ SHIM¤ 0.05MM	2	SN:B10001--
	419-22-11371	・ SHIM¤ 0.2MM	2	SN:B10001--
	419-22-11381	・ SHIM¤ 0.3MM	2	SN:B10001--
	419-22-11391	・ SHIM¤ 0.8MM	1	SN:B10001--
14	01010-61440	・ BOLT	10	SN:B10001--
15	01643-31445	・ WASHER	10	SN:B10001--

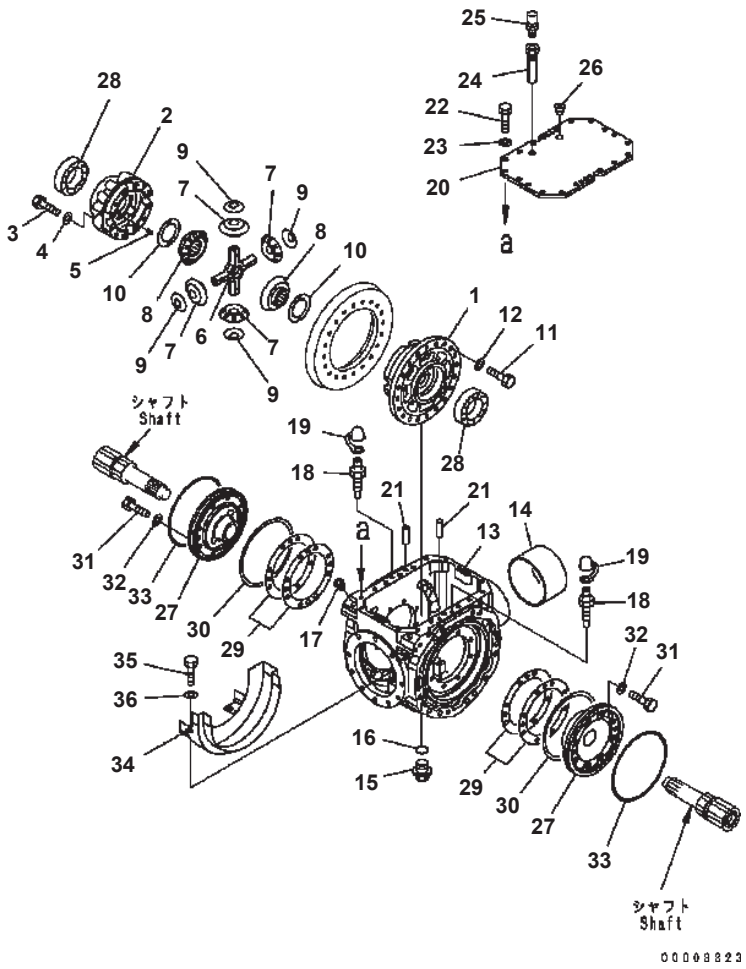

REAR AXLE (DIFFERENTIAL 2/2)

Item	Part No.	Description	Qty	Options
	(419-23-30010)	AXLE ASS'Y {REAR} THIS ASSEMBLY CONSISTS OF ALL PARTS SHOWN IN FIGS.F4500-51A0 TO F4500-57A0.	1	SN:B10001--
	419-22-31501	· CASE ASS'Y	1	SN:B10001--
1	419-22-31511	· · CASE	1	SN:B10001--
2	419-22-31521	· · CASE	1	SN:B10001--
3	01010-61295	· · BOLT	12	SN:B10001--
4	01643-31232	· · WASHER	12	SN:B10001--
5	175-21-12180	· · PIN	4	SN:B10001--
6	418-22-31410	· SPIDER	1	SN:B10001--
7	419-22-11421	· PINION	4	SN:B10001--
8	419-22-21430	· GEAR	2	SN:B10001--
9	418-22-31550	· WASHER	4	SN:B10001--
10	419-22-11631	· WASHER	2	SN:B10001--
11	01010-61240	· BOLT	20	SN:B10001--
12	01643-31232	· WASHER	20	SN:B10001--
13	(☆419-23-33611)	· HOUSING	1	SN:B10001--
14	423-23-23170	· SLEEVE	1	SN:B10001--
15	07044-13620	· PLUG{DRAIN}	1	SN:B10001--
16	07002-13634	· O-RING	1	SN:B10001--
17	07043-70211	· PLUG	2	SN:B10001--
18	419-33-11460	· BLEEDER	2	SN:B10001--
19	566-32-11620	· CAP	2	SN:B10001--
20	419-22-33621	· COVER	1	SN:B10001--
21	04020-01228	· PIN {DOWEL}	2	SN:B10001--
22	01010-61240	· BOLT	20	SN:B10001--
23	01643-31232	· WASHER	20	SN:B10001--
24	419-22-33921	· CONNECTOR	1	SN:B10001--
25	07030-01030	· BREATHER	1	SN:B10001--
26	07043-70415	· PLUG	1	SN:B10001--
27	419-22-21861	· CARRIER	2	SN:B10001--
28	419-22-11850	· BEARING	2	SN:B10001--
29	419-22-21760	· SHIM¤ 0.05MM	6	SN:B10001--
	419-22-21770	· SHIM¤ 0.2MM	3	SN:B10001--
	419-22-21780	· SHIM¤ 0.3MM	3	SN:B10001--
	419-22-21790	· SHIM¤ 0.8MM	2	SN:B10001--
30	418-33-21430	· RING	2	SN:B10001--
31	01010-61240	· BOLT	16	SN:B10001--
32	01643-31232	· WASHER	16	SN:B10001--

WA320-5 S/N B10001-UP

REAR AXLE (DIFFERENTIAL 2/2)

Item	Part No.	Description	Qty	Options
33	419-33-21710	· SEAL	2	SN:B10001--
34	419-22-31710	· COVER {GEAR}	1	SN:B10001--
35	01010-61225	· BOLT	4	SN:B10001--
36	01643-31232	· WASHER	4	SN:B10001--

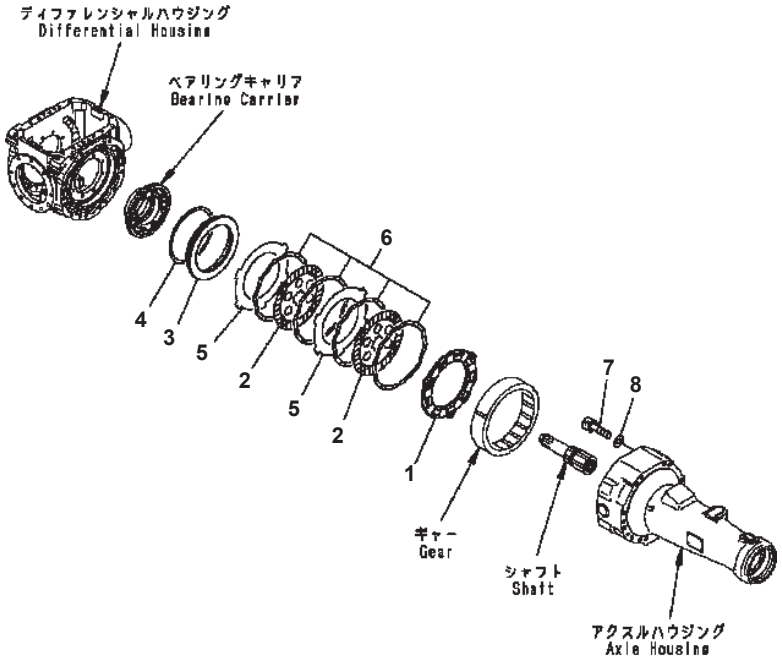

REAR AXLE (BRAKE)

Item	Part No.	Description	Qty	Options
	(419-23-30010)	AXLE ASS'Y {REAR} THESE ASSEMBLIES CONSISTS OF ALL PARTS SHOWN IN FIGS.F4500-51A0 TO F4500-57A0.	1	SN:B10001--
1	419-33-21761	・ PLATE	2	SN:B10001--
2	418-33-21340	・ DISC	4	SN:B10001--
3	419-33-21720	・ PISTON	2	SN:B10001--
4	419-33-21420	・ SEAL	2	SN:B10001--
5	419-33-31750	・ PLATE	4	SN:B10001--
6	419-33-21740	・ SPRING	8	SN:B10001--
7	01252-30816	・ BOLT	4	SN:B10001--
8	154-61-16570	・ WASHER	4	SN:B10001--

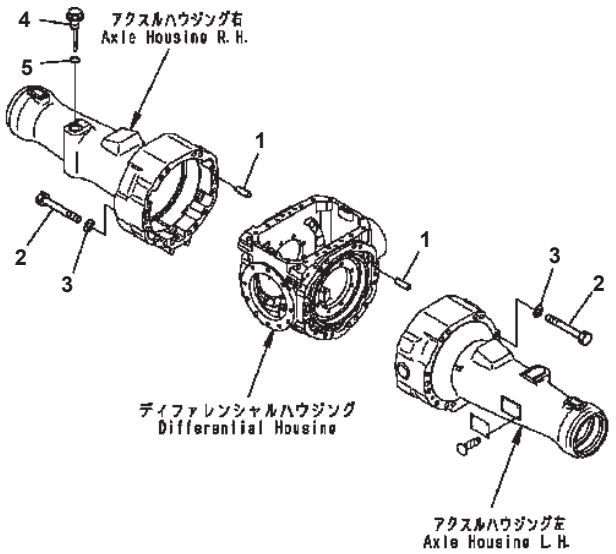

REAR AXLE (SLACK ADJUSTER MOUNTING)

Item	Part No.	Description	Qty	Options
	(419-23-30010)	AXLE ASS'Y {REAR} THESE ASSEMBLIES CONSISTS OF ALL PARTS SHOWN IN FIGS.F4500-51A0 TO F4500-57A0.	1	SN:B10001--
1	04020-01228	・ PIN {DOWEL}	4	SN:B10001--
2	01011-61675	・ BOLT	32	SN:B10001--
3	01643-31645	・ WASHER	32	SN:B10001--
4	419-22-33250	・ PLUG	1	SN:B10001--
5	07002-13034	・ O-RING	1	SN:B10001--

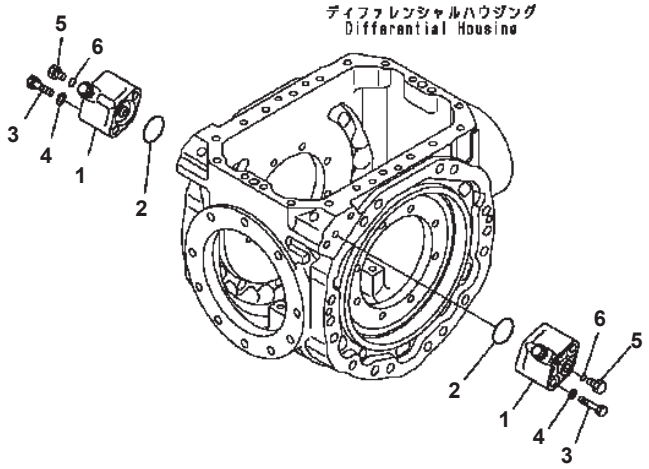

FRONT AXLE (SLACK ADJUSTER MOUNTING)

Item	Part No.	Description	Qty	Options
	(419-23-30010)	AXLE ASS'Y {REAR} THESE ASSEMBLIES CONSISTS OF ALL PARTS SHOWN IN FIGS.F4500-51A0 TO F4500-57A0.	1	SN:B10001--
1	418-43-37302	・ VALVE {SLACK ADJUSTER}	2	SN:B10001--
2	07000-12040	・ O-RING	2	SN:B10001--
3	01010-61290	・ BOLT	4	SN:B10001--
4	01643-31232	・ WASHER	4	SN:B10001--
5	07040-11409	・ PLUG	2	SN:B10001--
6	07002-11423	・ O-RING	2	SN:B10001--

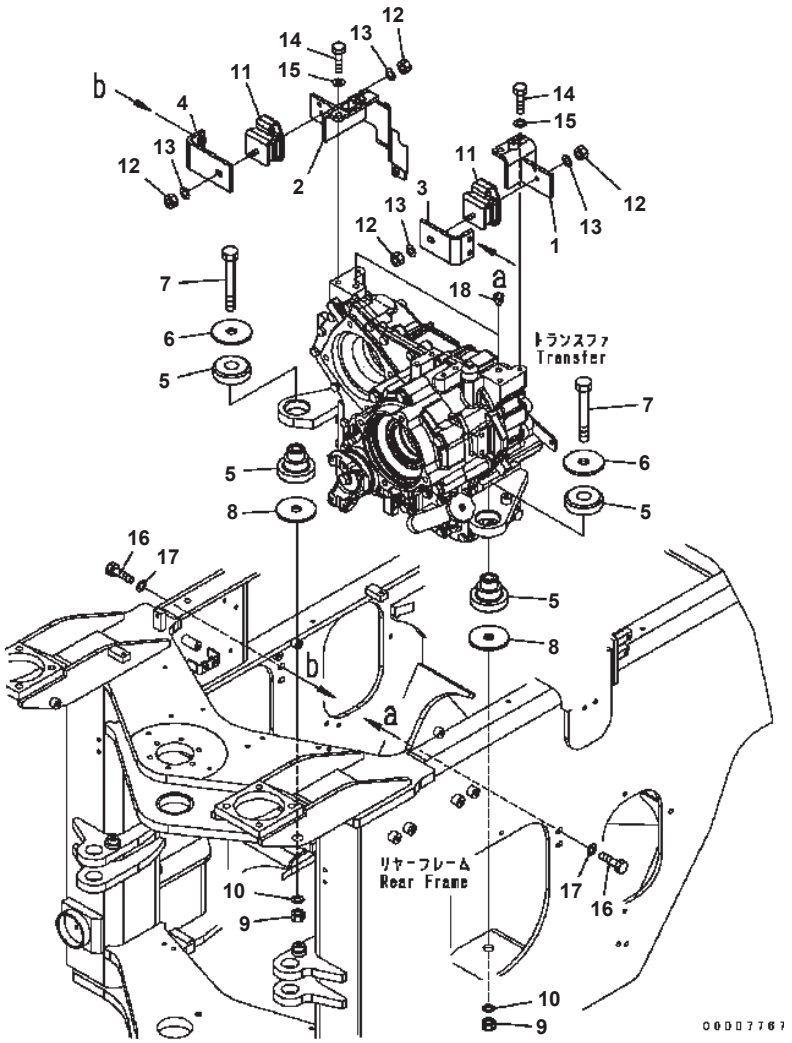

TRANSFER MOUNT

Item	Part No.	Description	Qty	Options
1	419-14-31132	BRACKET {L.H.}	1	SN:B10001--
2	419-14-31145	BRACKET	1	SN:B10001--
3	419-14-31150	PLATE {L.H.}	1	SN:B10001--
4	419-14-31160	PLATE {R.H.}	1	SN:B10001--
5	418-01-11112	CUSHION	2	SN:B10001--
6	419-01-11162	WASHER	2	SN:B10001--
7	01011-62220	BOLT	2	SN:B10001--
8	419-01-11162	WASHER	2	SN:B10001--
9	01580-02218	NUT	2	SN:B10001--
10	01643-32260	WASHER	2	SN:B10001--
11	20S-01-71331	CUSHION	2	SN:B10001--
12	01580-11008	NUT	4	SN:B10001--
13	01643-31032	WASHER	4	SN:B10001--
14	01010-81235	BOLT	4	SN:B10001--
15	01643-31232	WASHER	4	SN:B10001--
16	01010-81035	BOLT	4	SN:B10001--
17	01643-31032	WASHER	4	SN:B10001--
18	07049-01620	PLUG	2	SN:B10001--

HYDRAULIC SYSTEM

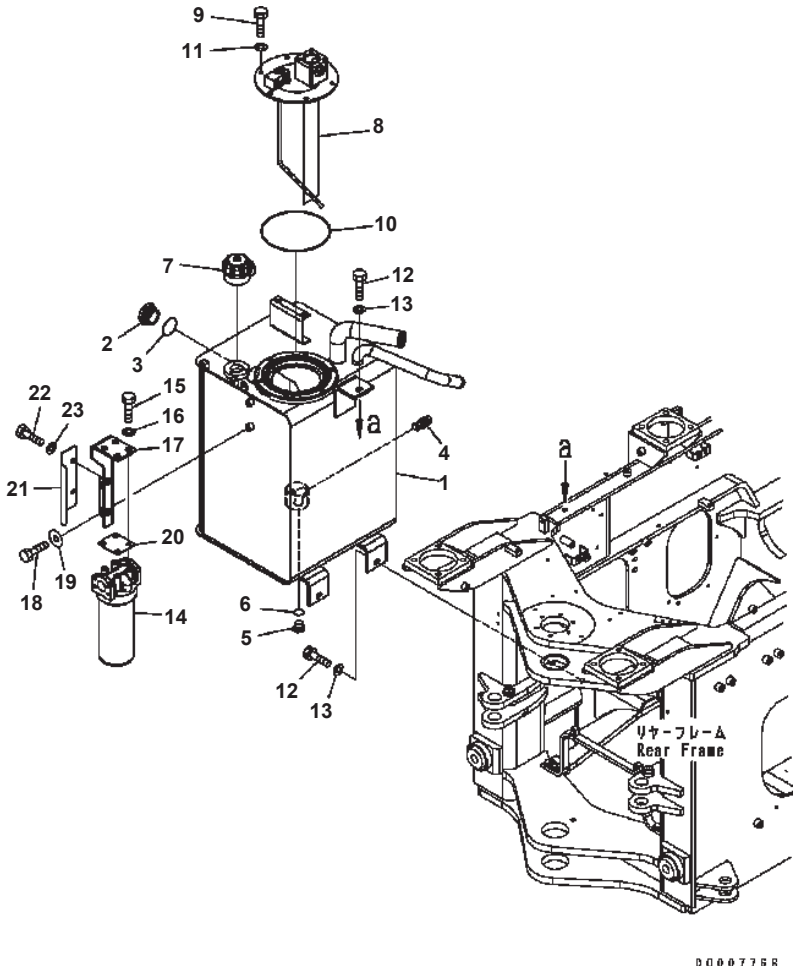

HYDRAULIC TANK

Item	Part No.	Description	Qty	Options
1	419-60-35113	HYDRAULIC TANK	1	SN:B10001--
2	421-60-11622	GAUGE	1	SN:B10001--
3	07002-15234	O-RING	1	SN:B10001--
4	419-60-35220	PLUG	1	SN:B10001--
5	07040-12412	PLUG	1	SN:B10001--
6	07002-12434	O-RING	1	SN:B10001--
7	418-60-35120	BREATHER	1	SN:B10001--
	417-60-15380	· ELEMENT	1	SN:B10001--
8	419-60-35164	COVER ASS'Y	1	SN:B10001--
9	01010-81025	BOLT	6	SN:B10001--
10	07000-15200	O-RING	1	SN:B10001--
11	01643-31032	WASHER	6	SN:B10001--
12	01010-81240	BOLT	3	SN:B10001--
13	01643-31232	WASHER	3	SN:B10001--
14	419-60-35142	FILTER ASS'Y	1	SN:B10001--
	419-60-35152	· CARTRIDGE	1	SN:B10001--
15	01010-81035	BOLT	4	SN:B10001--
16	203-54-56970	WASHER	4	SN:B10001--
17	418-60-35152	PLATE	1	SN:B10001--
18	01010-81020	BOLT	2	SN:B10001--
19	203-54-56970	WASHER	2	SN:B10001--
20	418-60-35190	PLATE	1	SN:B10001--
21	419-60-35130	COVER	1	SN:B10001--
22	01010-81020	BOLT	2	SN:B10001--
23	01643-31032	WASHER	2	SN:B10001--

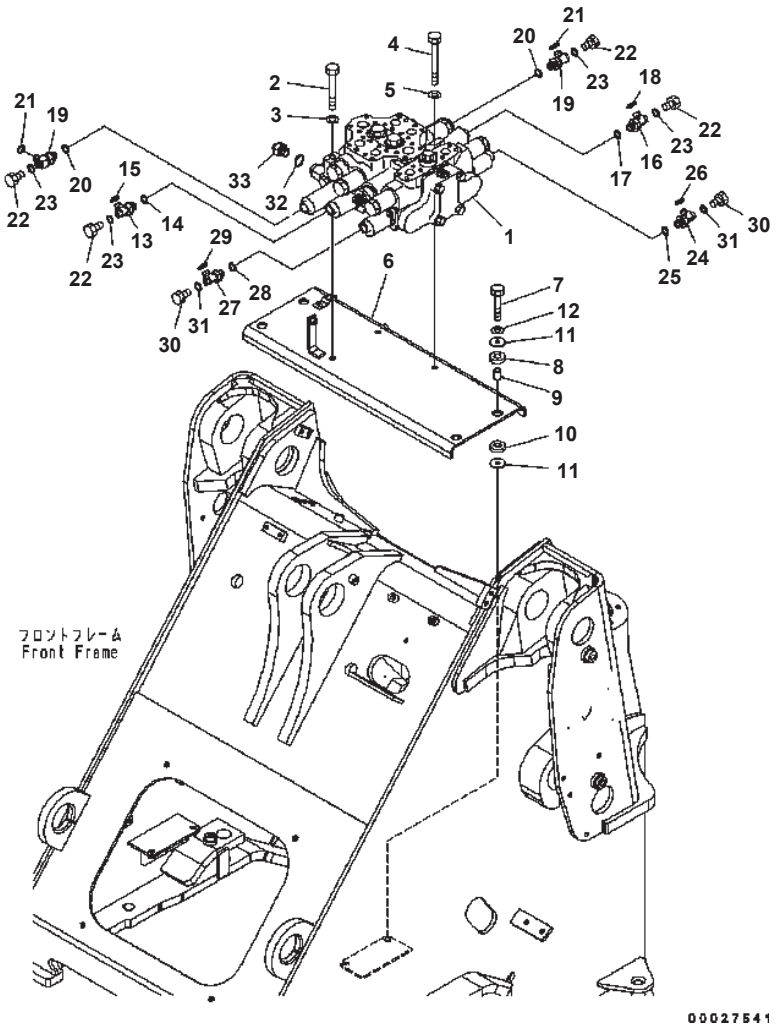

WA320-5 S/N B10001-UP

MAIN VALVE (FOR 3-SPOOL VALVE)

Item	Part No.	Description	Qty	Options
1	(709-93-12700)	CONTROL VALVE	1	SN:B10001--
2	01010-81285	BOLT	2	SN:B10001--
3	01643-31232	WASHER	2	SN:B10001--
4	01010-81290	BOLT	1	SN:B10001--
5	01643-31232	WASHER	1	SN:B10001--
6	419-64-33111	BRACKET	1	SN:B10001--
7	01010-81255	BOLT	4	SN:B10001--
8	419-43-17930	CUSHION	4	SN:B10001--
9	417-54-13470	SPACER	4	SN:B10001--
10	415-64-13130	CUSHION	4	SN:B10001--
11	419-43-17920	WASHER	8	SN:B10001--
12	01643-31232	WASHER	4	SN:B10001--
13	02782-50315	ELBOW	1	SN:B10001--
14	07002-12034	O-RING	1	SN:B10001--
15	02896-11009	O-RING	1	SN:B10001--
16	02782-50315	ELBOW	1	SN:B10001--
17	07002-12034	O-RING	1	SN:B10001--
18	02896-11009	O-RING	1	SN:B10001--
19	419-62-33121	VALVE ASS'Y	2	SN:B10001--
20	07002-12034	O-RING	2	SN:B10001--
21	02896-11009	O-RING	2	SN:B10001--
22	07040-11007	PLUG	4	SN:B10001--
23	07002-11023	O-RING	4	SN:B10001--
24	02782-50315	ELBOW	1	SN:B10001--
25	07002-12034	O-RING	1	SN:B10001--
26	02896-11009	O-RING	1	SN:B10001--
27	02782-50315	ELBOW	1	SN:B10001--
28	07002-12034	O-RING	1	SN:B10001--
29	02896-11009	O-RING	1	SN:B10001--
30	07040-11007	PLUG	2	SN:B10001--
31	07002-11023	O-RING	2	SN:B10001--
32	07002-12434	O-RING (FOR MULTI COUPLER)	1	SN:B10001--
33	8255-62-4330	UNION (FOR MULTI COUPLER)	1	SN:B10001--

Ref. H0120-01A1 Page 180020

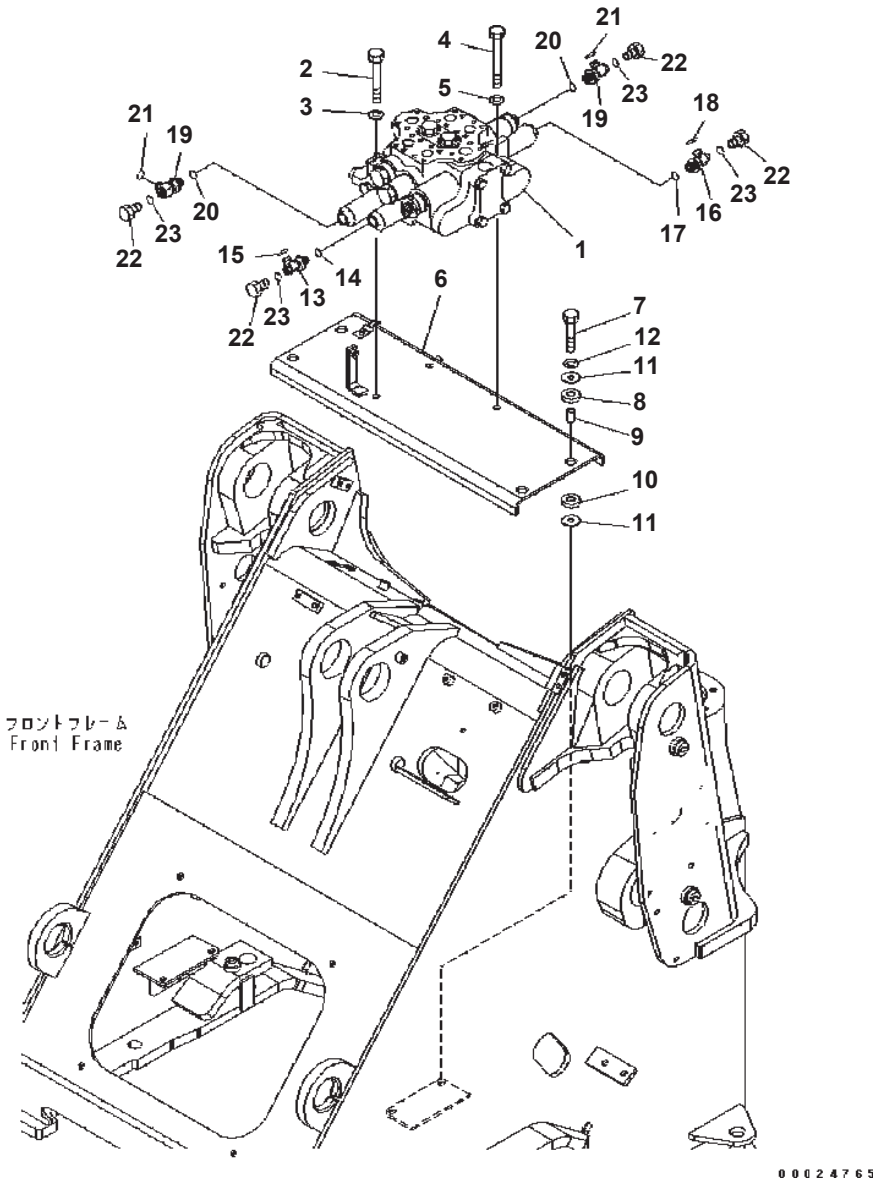

WA320-5 S/N B10001-UP

MAIN VALVE

Item	Part No.	Description	Qty	Options
1	(700-92-39000)	CONTROL VALVE	1	SN:B10001--
2	01010-81285	BOLT	2	SN:B10001--
3	01643-31232	WASHER	2	SN:B10001--
4	01010-81290	BOLT	1	SN:B10001--
5	01643-31232	WASHER	1	SN:B10001--
6	419-64-33111	BRACKET	1	SN:B10001--
7	01010-81255	BOLT	4	SN:B10001--
8	419-43-17930	CUSHION	4	SN:B10001--
9	417-54-13470	SPACER	4	SN:B10001--
10	415-64-13130	CUSHION	4	SN:B10001--
11	419-43-17920	WASHER	8	SN:B10001--
12	01643-31232	WASHER	4	SN:B10001--
13	02782-50315	ELBOW	1	SN:B10001--
14	07002-12034	O-RING	1	SN:B10001--
15	02896-11009	O-RING	1	SN:B10001--
16	02782-50315	ELBOW	1	SN:B10001--
17	07002-12034	O-RING	1	SN:B10001--
18	02896-11009	O-RING	1	SN:B10001--
19	419-62-33121	VALVE ASS'Y	2	SN:B10001--
20	07002-12034	O-RING	2	SN:B10001--
21	02896-11009	O-RING	2	SN:B10001--
22	07040-11007	PLUG	4	SN:B10001--
23	07002-11023	O-RING	4	SN:B10001--

Ref. H0120-01A2 Page 180030

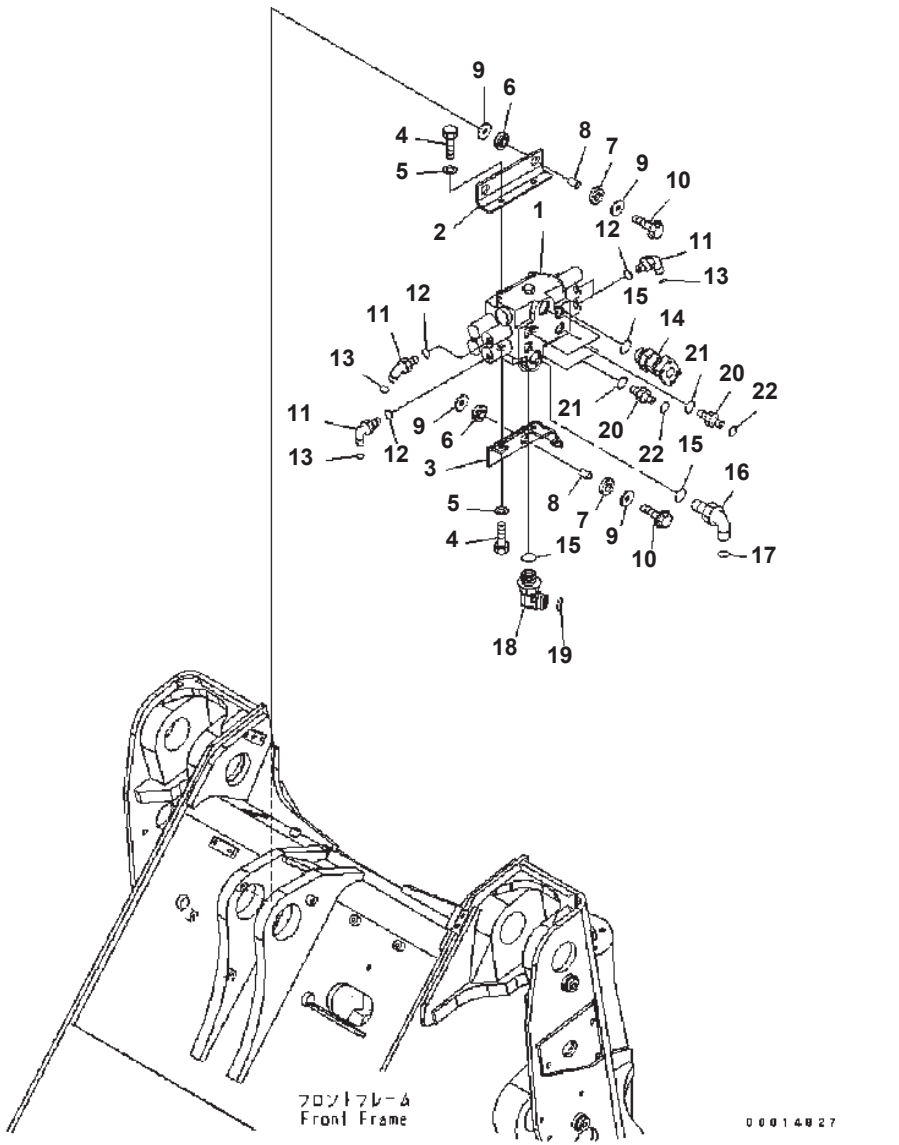

WA320-5 S/N B10001-UP

HYDRAULIC MAIN VALVE (4-SPOOL VALVE)

Item	Part No.	Description	Qty	Options
1	(700-82-84001)	CONTROL VALVE	1	SN:B10001--
2	419-N28-2110	BRACKET	1	SN:B10001--
3	419-N28-2120	BRACKET	1	SN:B10001--
4	01010-81025	BOLT	4	SN:B10001--
5	01643-31032	WASHER	4	SN:B10001--
6	419-43-17930	CUSHION	3	SN:B10001--
7	415-64-13130	CUSHION	3	SN:B10001--
8	417-54-13470	SPACER	3	SN:B10001--
9	419-43-17920	WASHER	6	SN:B10001--
10	01435-01245	BOLT	3	SN:B10001--
11	02782-10311	ELBOW	4	SN:B10001--
12	07002-11423	O-RING	4	SN:B10001--
13	02896-11009	O-RING	4	SN:B10001--
14	423-V88-2630	FLANGE	1	SN:B10001--
15	07002-13334	O-RING	3	SN:B10001--
16	02782-10632	ELBOW	1	SN:B10001--
17	02896-11018	O-RING	1	SN:B10001--
18	21W-62-42640	ELBOW	1	SN:B10001--
19	11Y-62-11980	O-RING	1	SN:B10001--
20	02781-00628	UNION	4	SN:B10001--
21	07002-12434	O-RING	4	SN:B10001--
22	02896-11018	O-RING	4	SN:B10001--

Ref. H0120-02A2 Page 180040

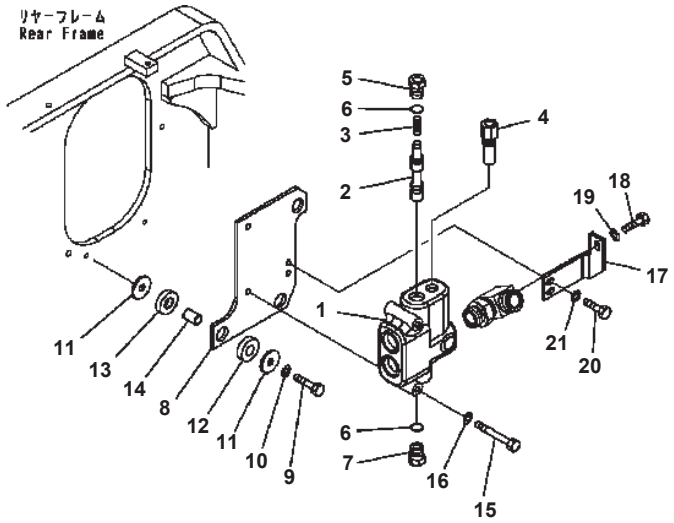

STEERING VALVE

Item	Part No.	Description	Qty	Options
1	419-64-35301	VALVE ASS'Y	1	SN:B10001--
	☆	· HOUSING	1	SN:B10001--
2	☆	· SPOOL	1	SN:B10001--
3	416-64-15230	· SPRING	1	SN:B10001--
4	419-64-35430	· VALVE ASS'Y	1	SN:B10001--
5	418-64-25330	· PLUG	1	SN:B10001--
6	416-64-15260	· O-RING	2	SN:B10001--
7	416-64-15270	· PLUG	1	SN:B10001--
8	419-64-35112	BRACKET	1	SN:B10001--
9	01010-81050	BOLT	3	SN:B10001--
10	01643-31032	WASHER	3	SN:B10001--
11	415-64-13120	WASHER	6	SN:B10001--
12	419-43-17930	CUSHION	3	SN:B10001--
13	415-64-13130	CUSHION	3	SN:B10001--
14	417-62-14130	SPACER	3	SN:B10001--
15	01010-80880	BOLT	2	SN:B10001--
16	01643-30823	WASHER	2	SN:B10001--
17	419-62-31660	BRACKET	1	SN:B10001--
18	01010-80820	BOLT	1	SN:B10001--
19	01643-30823	WASHER	1	SN:B10001--
20	01010-80825	BOLT	2	SN:B10001--
21	01643-30823	WASHER	2	SN:B10001--

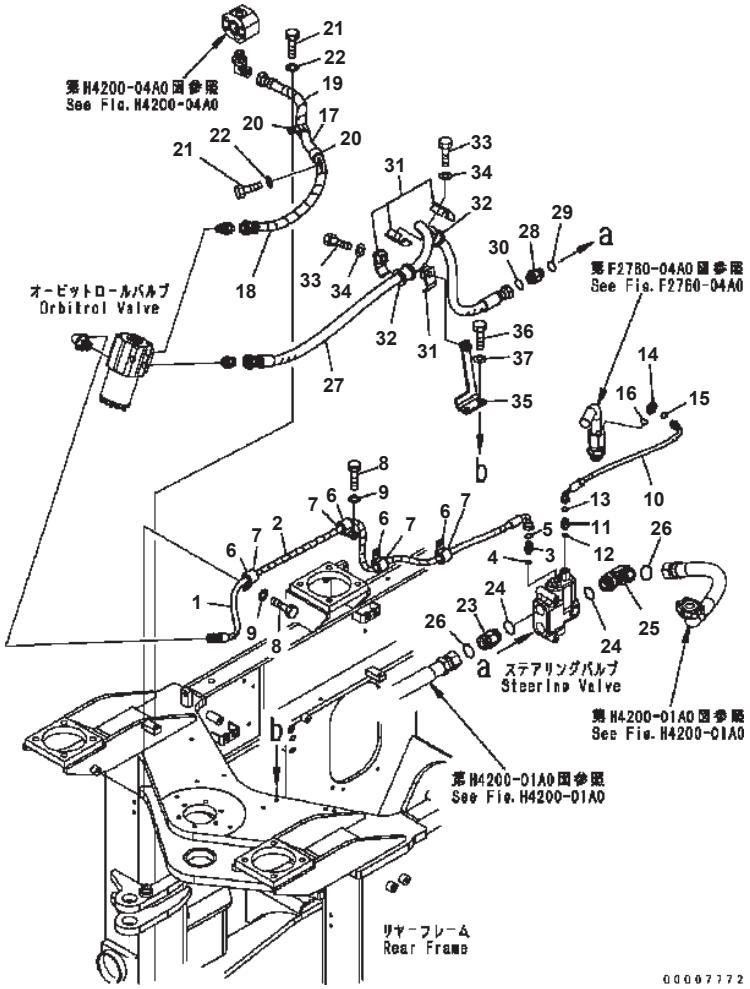

STEERING VALVE (PIPING) (PRIORITY VALVE TO STEERING VALVE)

Item	Part No.	Description	Qty	Options
1	419-62-33912	HOSE	1	SN:B10001--
2	08210-00611	· SPIRAL TUBE	1	SN:B10001--
3	11Y-62-12530	UNION	1	SN:B10001--
4	416-62-11480	O-RING	1	SN:B10001--
5	02896-11008	O-RING	1	SN:B10001--
6	04434-52712	CLIP	4	SN:B10001--
7	07095-20420	CUSHION	4	SN:B10001--
8	01010-81020	BOLT	4	SN:B10001--
9	01643-31032	WASHER	4	SN:B10001--
10	02764-002A5	HOSE	1	SN:B10001--
11	11Y-62-12120	UNION	1	SN:B10001--
12	416-62-11480	O-RING	1	SN:B10001--
13	02896-11008	O-RING	1	SN:B10001--
14	02783-10210	ELBOW	1	SN:B10001--
15	02896-11008	O-RING	1	SN:B10001--
16	07002-11423	O-RING	1	SN:B10001--
17	419-62-33674	HOSE	1	SN:B10001--
18	08210-01804	· SPIRAL TUBE	1	SN:B10001--
19	08210-01803	· SPIRAL TUBE	1	SN:B10001--
20	04434-52512	CLIP	2	SN:B10001--
21	01010-81020	BOLT	2	SN:B10001--
22	01643-31032	WASHER	2	SN:B10001--
23	418-62-32172	NIPPLE	1	SN:B10001--
24	418-62-11630	O-RING	2	SN:B10001--
25	419-62-31153	ELBOW	1	SN:B10001--
26	11Y-62-11980	O-RING	2	SN:B10001--
27	419-62-33653	HOSE	1	SN:B10001--
28	418-62-31430	NIPPLE	1	SN:B10001--
29	418-62-11620	O-RING	1	SN:B10001--
30	02896-11015	O-RING	1	SN:B10001--
31	07094-10518	CLAMP	4	SN:B10001--
32	07095-00523	CUSHION	2	SN:B10001--
33	01010-81270	BOLT	2	SN:B10001--
34	01643-31232	WASHER	2	SN:B10001--
35	419-64-35142	BRACKET	1	SN:B10001--
36	01010-81025	BOLT	2	SN:B10001--
37	01643-31032	WASHER	2	SN:B10001--

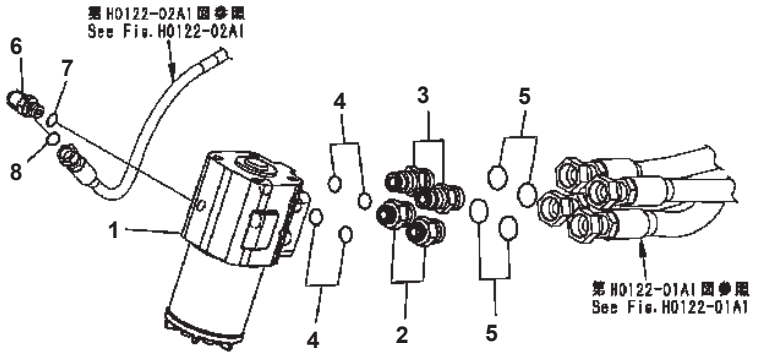

STEERING DEMAND VALVE

Item	Part No.	Description	Qty	Options
1	419-64-35102	VALVE ASS'Y	1	SN:B10001--
2	418-62-31412	NIPPLE	2	SN:B10001--
3	418-62-31421	NIPPLE	2	SN:B10001--
4	415-62-11560	O-RING	4	SN:B10001--
5	02896-11015	O-RING	4	SN:B10001--
6	56B-61-13650	ELBOW	1	SN:B10001--
7	416-62-11480	O-RING	1	SN:B10001--
8	02896-11009	O-RING	1	SN:B10001--

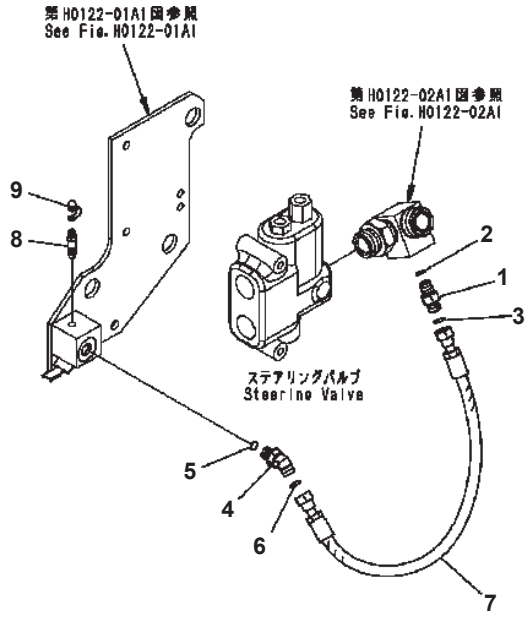

D0027546

EMERGENCY STEERING SENSOR LINE

Item	Part No.	Description	Qty	Options
1	20Y-62-41970	NIPPLE	1	SN:B10001--
2	07002-11423	O-RING	1	SN:B10001--
3	02896-11008	O-RING	1	SN:B10001--
4	02783-10210	ELBOW	1	SN:B10001--
5	07002-11423	O-RING	1	SN:B10001--
6	02896-11008	O-RING	1	SN:B10001--
7	02765-00205	HOSE	1	SN:B10001--
8	419-33-11460	BLEEDER	1	SN:B10001--
9	566-32-11620	CAP	1	SN:B10001--

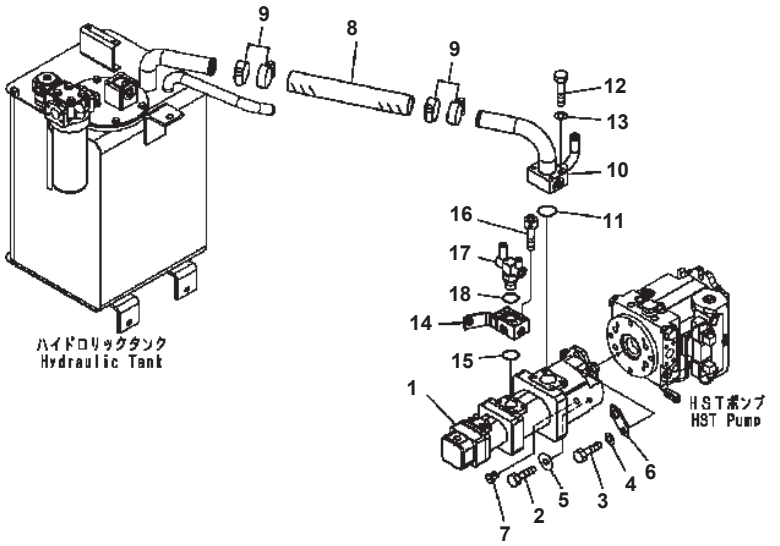

HYDRAULIC PUMP

Item	Part No.	Description	Qty	Options
1	(705-56-36051)	PUMP ASS'Y	1	SN:B10211--
	□(705-56-36050)	PUMP ASS'Y	1	SN:B10001--B10210
2	01010-81240	BOLT	4	SN:B10001--
3	01010-81650	BOLT	1	SN:B10001--
4	01643-31645	WASHER	1	SN:B10001--
5	175-54-34170	WASHER	4	SN:B10001--
6	419-62-33950	PLATE	1	SN:B10001--
7	07049-02025	PLUG	1	SN:B10001--
8	419-62-34110	HOSE	1	SN:B10001--
9	07289-00070	CLAMP	4	SN:B10001--
10	419-62-34212	TUBE	1	SN:B10001--
11	07000-12060	O-RING	1	SN:B10001--
12	01010-81270	BOLT	4	SN:B10001--
13	01643-31232	WASHER	4	SN:B10001--
14	419-62-34291	BLOCK	1	SN:B10001--
15	07000-13048	O-RING	1	SN:B10001--
16	01252-71255	BOLT	4	SN:B10001--
17	419-62-34311	TEE	1	SN:B10001--
18	07002-13334	O-RING	1	SN:B10001--

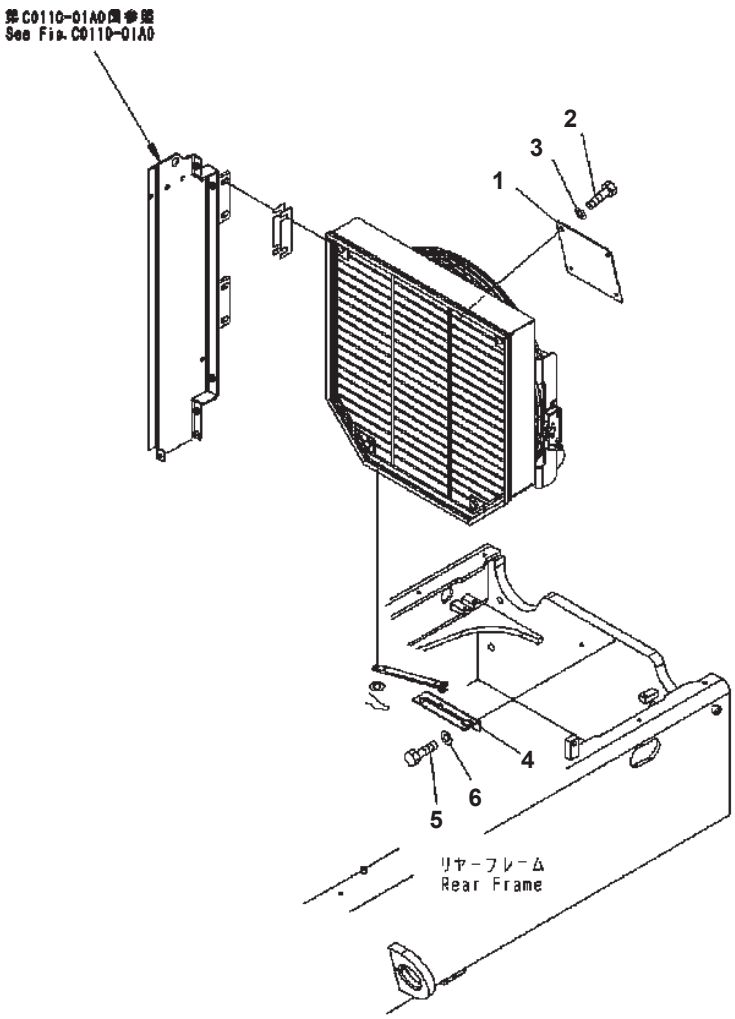

Item	Part No.	Description	Qty	Options
1	419-03-33261	PLATE	1	SN:B10001--
2	01010-81020	BOLT	4	SN:B10001--
3	01643-31032	WASHER	4	SN:B10001--
4	419-03-33162	PLATE	1	SN:B10001--
5	01010-81025	BOLT	2	SN:B10001--
6	01643-31032	WASHER	2	SN:B10001--

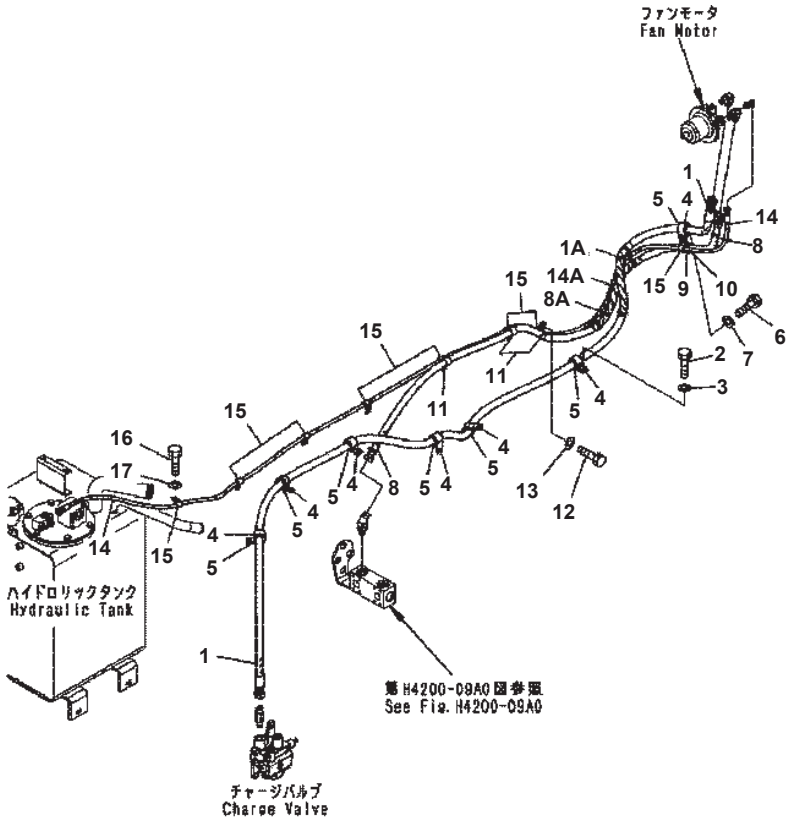

FAN DRIVE PIPING

Item	Part No.	Description	Qty	Options
1	419-03-33324	HOSE	1	SN:B10001--
1A	08210-01803	· SPIRAL TUBE	1	SN:B10001--
2	01010-81020	BOLT	6	SN:B10001--
3	01643-31032	WASHER	6	SN:B10001--
4	04434-53212	CLIP	7	SN:B10001--
5	07095-20523	CUSHION	7	SN:B10001--
6	01010-81030	BOLT	1	SN:B10001--
7	01643-31032	WASHER	1	SN:B10001--
8	419-03-33343	HOSE	1	SN:B10001--
8A	08210-01803	· SPIRAL TUBE	1	SN:B10001--
9	04434-53412	CLIP	1	SN:B10001--
10	07095-20627	CUSHION	1	SN:B10001--
11	04434-52310	CLIP	3	SN:B10001--
12	01010-81020	BOLT	3	SN:B10001--
13	01643-31032	WASHER	3	SN:B10001--
14	419-03-33334	HOSE	1	SN:B10001--
14A	08210-01203	· SPIRAL TUBE	1	SN:B10001--
15	04434-51210	CLIP	8	SN:B10001--
16	01010-81020	BOLT	3	SN:B10001--
17	01643-31032	WASHER	3	SN:B10001--

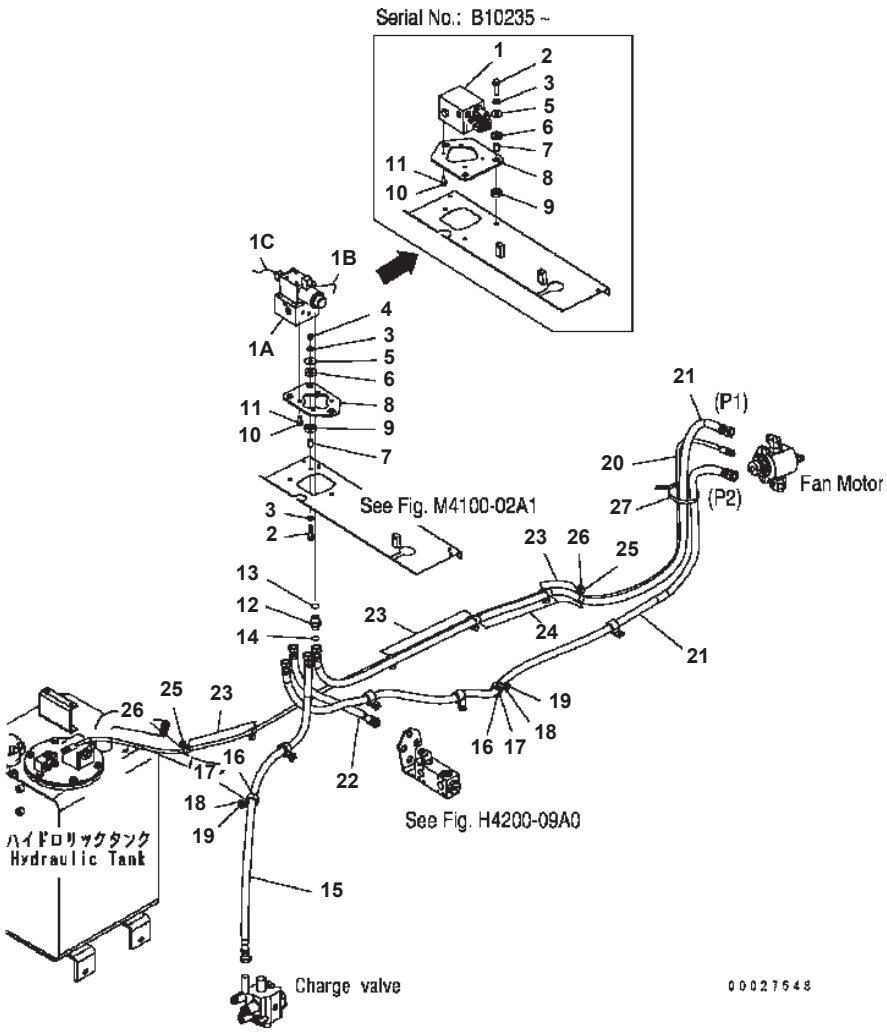

FAN DRIVE PIPING (FOR SUGAR CANE) (#B10186-)

Item	Part No.	Description	Qty	Options
1	418-62-B1010	MANIFOLD	1	SN:B10235--
	419-62-A1720	· VALVE, SOLENOID	1	SN:B10235--
	419-62-A1740	· CHECK VALVE	2	SN:B10235--
	419-62-A1790	· PLUG	4	SN:B10235--
	419-62-A1730	· RELIEF VALVE	1	SN:B10235--
1A	419-03-B1340	VALVE, SOLENOID	1	SN:B10186--B10234
1B	419-06-B3140	WIRING HARNESS	1	SN:B10186--B10234
1C	419-06-B3150	WIRING HARNESS	1	SN:B10186--B10234
2	01010-81250	BOLT	3	SN:B10186--
3	01643-31232	WASHER	3	SN:B10235--
	01643-31232	WASHER	6	SN:B10186--B10234
4	01580-01210	NUT	3	SN:B10186--B10234
5	419-43-17920	WASHER	3	SN:B10186--
6	415-64-13130	CUSHION	3	SN:B10186--
7	417-54-13470	SPACER	3	SN:B10186--
8	419-62-B4430	PLATE	1	SN:B10235--
	419-62-B1350	PLATE	1	SN:B10186--B10234
9	419-43-17930	CUSHION	3	SN:B10186--
10	01010-80825	BOLT	4	SN:B10235--
	01010-81025	BOLT	4	SN:B10186--B10234
11	01643-30823	WASHER	4	SN:B10235--
	01643-31032	WASHER	4	SN:B10186--B10234
12	419-18-B1011	UNION	4	SN:B10327--
	417-18-32190	UNION	4	SN:B10186--B10287
13	07000-12021	O-RING	4	SN:B10327--
	07000-12018	O-RING	4	SN:B10186--B10287
14	02896-11015	O-RING	4	SN:B10327--
	02896-11015	O-RING	4	SN:B10186--B10287
12	419-18-B1010	UNION	4	SN:B10288--B10326
13	419-18-B1020	O-RING	4	SN:B10288--B10326
14	419-18-B1030	O-RING	4	SN:B10288--B10326
15	419-62-B1321	HOSE (TO "P" PORT OF SOLENOID VALVE)	1	SN:B10186--
16	04434-52312	CLIP	6	SN:B10186--
17	07095-20523	CUSHION	6	SN:B10186--
18	01010-81020	BOLT	6	SN:B10186--
19	01643-31032	WASHER	6	SN:B10186--
20	419-03-33334	HOSE	1	SN:B10186--
21	419-62-B1311	HOSE (P1 TO "B" PORT AND P2 TO PORT "A" OF SOLENOID VALVE)	2	SN:B10186--

FAN DRIVE PIPING (FOR SUGAR CANE) (#B10186-)

Item	Part No.	Description	Qty	Options
22	419-62-B1331	HOSE (TO "T" PORT OF SOLENOID VALVE)	1	SN:B10186--
23	04434-51210	CLIP	7	SN:B10186--
24	04434-52310	CLIP	3	SN:B10186--
25	01010-81020	BOLT	5	SN:B10186--
26	01643-31032	WASHER	5	SN:B10186--
27	08034-20536	BAND	1	SN:B10186--

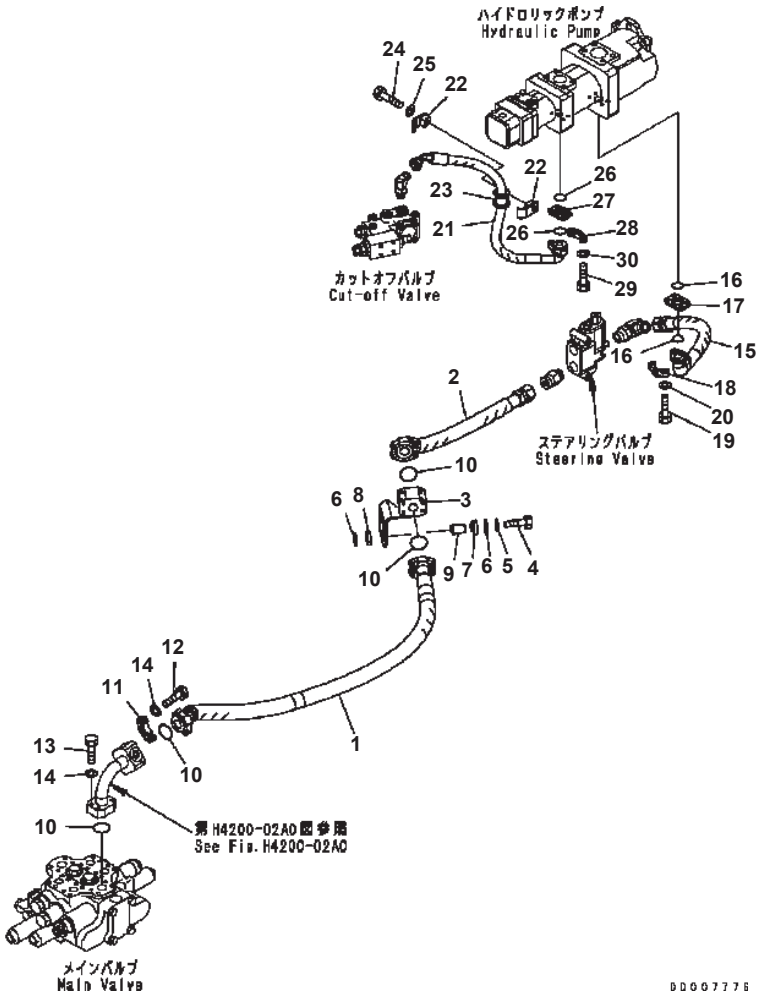

HYDRAULIC PIPING (MAIN LINE 1/2)

Item	Part No.	Description	Qty	Options
1	419-62-33341	HOSE	1	SN:B10001--
2	419-62-33792	HOSE	1	SN:B10001--
3	419-62-31271	BLOCK	1	SN:B10001--
4	01010-81050	BOLT	3	SN:B10001--
5	01643-31032	WASHER	3	SN:B10001--
6	415-64-13120	WASHER	6	SN:B10001--
7	419-43-17930	CUSHION	3	SN:B10001--
8	415-64-13130	CUSHION	3	SN:B10001--
9	417-62-14130	SPACER	3	SN:B10001--
10	07000-13038	O-RING	4	SN:B10001--
11	07371-31255	FLANGE {SPLIT}	6	SN:B10001--
12	07372-21035	BOLT	12	SN:B10001--
13	07372-21045	BOLT	4	SN:B10001--
14	01643-51032	WASHER	16	SN:B10001--
15	419-62-33313	HOSE	1	SN:B10001--
16	07000-13032	O-RING	2	SN:B10001--
17	07373-31000	SPACER	1	SN:B10001--
18	07371-31049	FLANGE {SPLIT}	2	SN:B10001--
19	07372-21040	BOLT	4	SN:B10001--
20	01643-51032	WASHER	4	SN:B10001--
21	419-62-33325	HOSE	1	SN:B10001--
22	07094-10518	CLAMP	2	SN:B10001--
23	07095-00526	CUSHION	1	SN:B10001--
24	01010-81265	BOLT	1	SN:B10001--
25	01643-31232	WASHER	1	SN:B10001--
26	07000-13025	O-RING	2	SN:B10001--
27	07373-10600	SPACER	1	SN:B10001--
28	07371-30638	FLANGE {SPLIT}	2	SN:B10001--
29	01010-80840	BOLT	4	SN:B10001--
30	01643-50823	WASHER	4	SN:B10001--

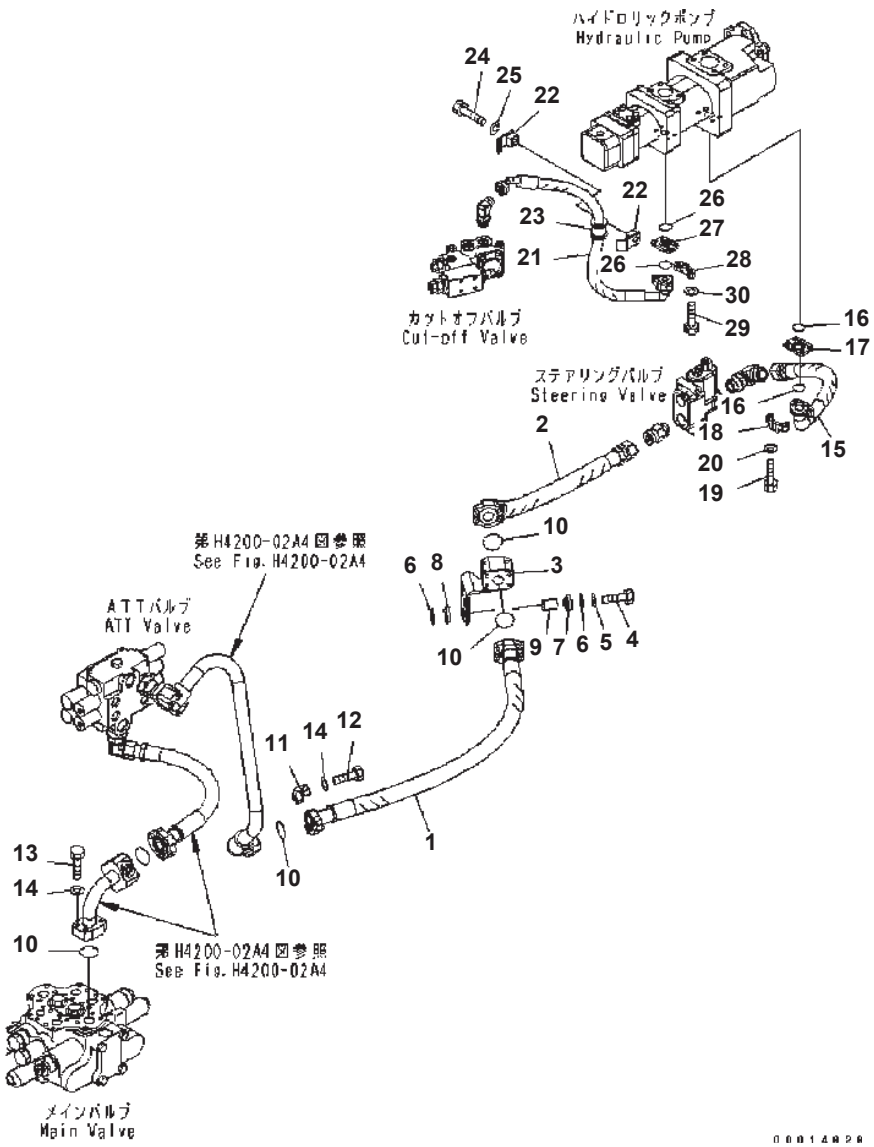

HYDRAULIC PIPING (MAIN LINE 1/2) (4-SPOOL VALVE)

Item	Part No.	Description	Qty	Options
1	419-V88-3370	HOSE	1	SN:B10001--
2	419-62-33792	HOSE	1	SN:B10001--
3	419-62-31271	BLOCK	1	SN:B10001--
4	01010-81050	BOLT	3	SN:B10001--
5	01643-31032	WASHER	3	SN:B10001--
6	415-64-13120	WASHER	6	SN:B10001--
7	419-43-17930	CUSHION	3	SN:B10001--
8	415-64-13130	CUSHION	3	SN:B10001--
9	417-62-14130	SPACER	3	SN:B10001--
10	07000-13038	O-RING	4	SN:B10001--
11	07371-31255	FLANGE, SPLIT	6	SN:B10001--
12	07372-21035	BOLT	12	SN:B10001--
13	07372-21045	BOLT	4	SN:B10001--
14	01643-51032	WASHER	16	SN:B10001--
15	419-62-33313	HOSE	1	SN:B10001--
16	07000-13032	O-RING	2	SN:B10001--
17	07373-31000	SPACER	1	SN:B10001--
18	07371-31049	FLANGE, SPLIT	2	SN:B10001--
19	07372-21040	BOLT	4	SN:B10001--
20	01643-51032	WASHER	4	SN:B10001--
21	419-62-33325	HOSE	1	SN:B10001--
22	07094-10518	CLAMP	2	SN:B10001--
23	07095-00526	CUSHION	1	SN:B10001--
24	01010-81265	BOLT	1	SN:B10001--
25	01643-31232	WASHER	1	SN:B10001--
26	07000-13025	O-RING	2	SN:B10001--
27	07373-10600	SPACER	1	SN:B10001--
28	07371-30638	FLANGE, SPLIT	2	SN:B10001--
29	01010-80840	BOLT	4	SN:B10001--
30	01643-50823	WASHER	4	SN:B10001--

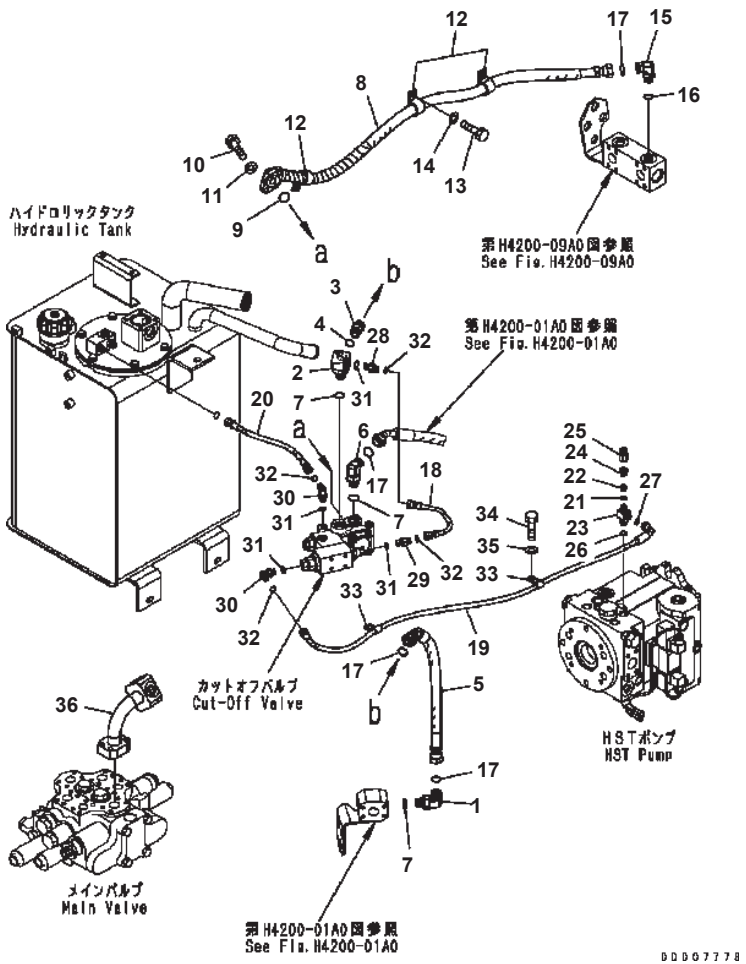

HYDRAULIC PIPING MAIN LINE (2/2)

Item	Part No.	Description	Qty	Options
1	02782-10522	ELBOW	1	SN:B10001--
2	419-62-31374	ELBOW	1	SN:B10001--
3	02781-00516	UNION	1	SN:B10001--
4	07002-12034	O-RING	1	SN:B10001--
5	419-62-33335	HOSE	1	SN:B10001--
6	02782-10522	ELBOW	1	SN:B10001--
7	07002-12434	O-RING	3	SN:B10001--
8	419-62-33764	HOSE	1	SN:B10001--
9	07000-13025	O-RING	1	SN:B10001--
10	01010-81035	BOLT	2	SN:B10001--
11	01643-31032	WASHER	2	SN:B10001--
12	04434-52712	CLIP	3	SN:B10001--
13	01010-81020	BOLT	3	SN:B10001--
14	01643-31032	WASHER	3	SN:B10001--
15	02782-10516	ELBOW	1	SN:B10001--
16	07002-12034	O-RING	1	SN:B10001--
17	02896-11015	O-RING	4	SN:B10001--
18	419-62-31630	TUBE	1	SN:B10001--
19	419-62-33355	HOSE	1	SN:B10001--
20	419-62-33882	HOSE	1	SN:B10001--
	419-18-31562	VALVE ASS'Y	1	SN:B10001--
21	07000-12010	· O-RING	1	SN:B10001--
22	20U-60-22310	· POPPET	1	SN:B10001--
23	419-18-31523	· ELBOW	1	SN:B10001--
24	419-18-31551	· PLUG	1	SN:B10001--
25	419-62-31670	· JOINT	1	SN:B10001--
26	07002-11423	O-RING	1	SN:B10001--
27	02896-11009	O-RING	1	SN:B10001--
28	02781-0021D	UNION	1	SN:B10001--
29	21W-62-43930	NIPPLE	1	SN:B10001--
30	02782-10210	ELBOW	2	SN:B10001--
31	07002-11423	O-RING	4	SN:B10001--
32	02896-11008	O-RING	5	SN:B10001--
33	04434-51212	CLIP	2	SN:B10001--
34	01010-81025	BOLT	1	SN:B10001--
35	01643-31032	WASHER	1	SN:B10001--
36	419-62-34133	TUBE	1	SN:B10001--

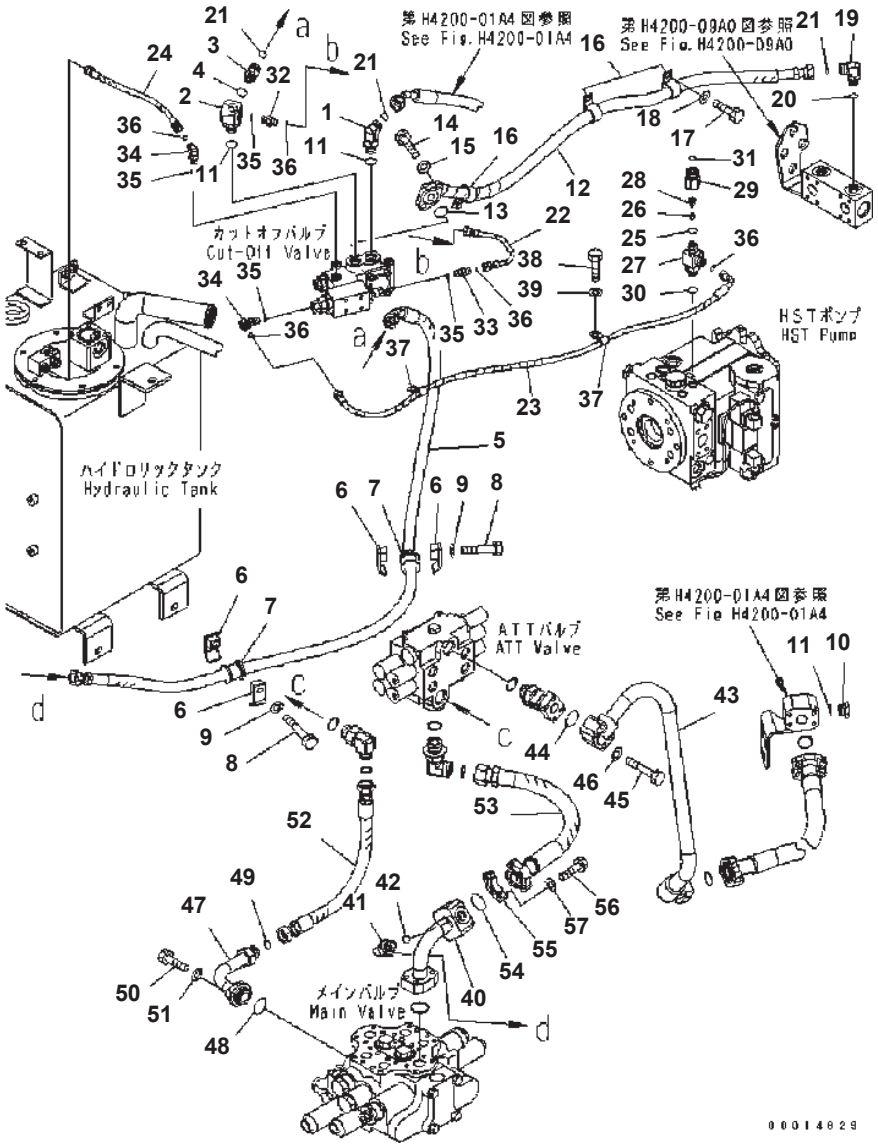

HYDRAULIC PIPING MAIN LINE (2/2) (4-SPOOL VALVE)

Item	Part No.	Description	Qty	Options
1	02782-10522	ELBOW	1	SN:B10001--
2	419-62-31374	ELBOW	1	SN:B10001--
3	02781-00516	UNION	1	SN:B10001--
4	07002-12034	O-RING	1	SN:B10001--
5	419-V88-3380	HOSE	1	SN:B10001--
6	07094-10518	CLAMP	4	SN:B10001--
7	07095-00526	CUSHION	2	SN:B10001--
8	01010-81265	BOLT	2	SN:B10001--
9	01643-31232	WASHER	2	SN:B10001--
10	07040-12412	PLUG	1	SN:B10001--
11	07002-12434	O-RING	3	SN:B10001--
12	419-62-33764	HOSE	1	SN:B10001--
13	07000-13025	O-RING	1	SN:B10001--
14	01010-81035	BOLT	2	SN:B10001--
15	01643-31032	WASHER	2	SN:B10001--
16	04434-52712	CLIP	3	SN:B10001--
17	01010-81020	BOLT	3	SN:B10001--
18	01643-31032	WASHER	3	SN:B10001--
19	02782-10516	ELBOW	1	SN:B10001--
20	07002-12034	O-RING	1	SN:B10001--
21	02896-11015	O-RING	3	SN:B10001--
22	419-62-31630	TUBE	1	SN:B10001--
23	419-62-33355	HOSE	1	SN:B10001--
24	419-62-33882	HOSE	1	SN:B10001--
	419-18-31562	VALVE ASS'Y	1	SN:B10001--
25	07000-12010	· O-RING	1	SN:B10001--
26	20U-60-22310	· POPPET	1	SN:B10001--
27	419-18-31523	· ELBOW	1	SN:B10001--
28	419-18-31551	· PLUG	1	SN:B10001--
29	419-62-31670	· JOINT	1	SN:B10001--
30	07002-11423	O-RING	1	SN:B10001--
31	02896-11009	O-RING	1	SN:B10001--
32	02781-0021D	UNION	1	SN:B10001--
33	21W-62-43930	NIPLLE	1	SN:B10001--
34	02782-10210	ELBOW	2	SN:B10001--
35	07002-11423	O-RING	4	SN:B10001--
36	02896-11008	O-RING	5	SN:B10001--
37	04434-51212	CLIP	2	SN:B10001--
38	01010-81025	BOLT	1	SN:B10001--
39	01643-31032	WASHER	1	SN:B10001--

WA320-5 S/N B10001-UP

HYDRAULIC PIPING MAIN LINE (2/2) (4-SPOOL VALVE)

Item	Part No.	Description	Qty	Options
40	419-V88-3180	TUBE	1	SN:B10001--
41	02782-10516	ELBOW	1	SN:B10001--
42	07002-12034	O-RING	1	SN:B10001--
43	419-V88-3151	TUBE	1	SN:B10001--
44	07000-13035	O-RING	1	SN:B10001--
45	01010-81050	BOLT	4	SN:B10001--
46	01643-31032	WASHER	4	SN:B10001--
47	423-V88-3420	TUBE	1	SN:B10001--
48	07000-13035	O-RING	1	SN:B10001--
49	02896-11018	O-RING	1	SN:B10001--
50	01010-81030	BOLT	2	SN:B10001--
51	01643-31032	WASHER	2	SN:B10001--
52	02762-006A4	HOSE	1	SN:B10001--
53	419-V88-3490	HOSE	1	SN:B10001--
54	07000-13038	O-RING	1	SN:B10001--
55	07371-31255	FLANGE, SPLIT	2	SN:B10001--
56	07372-21035	BOLT	4	SN:B10001--
57	01643-51032	WASHER	4	SN:B10001--

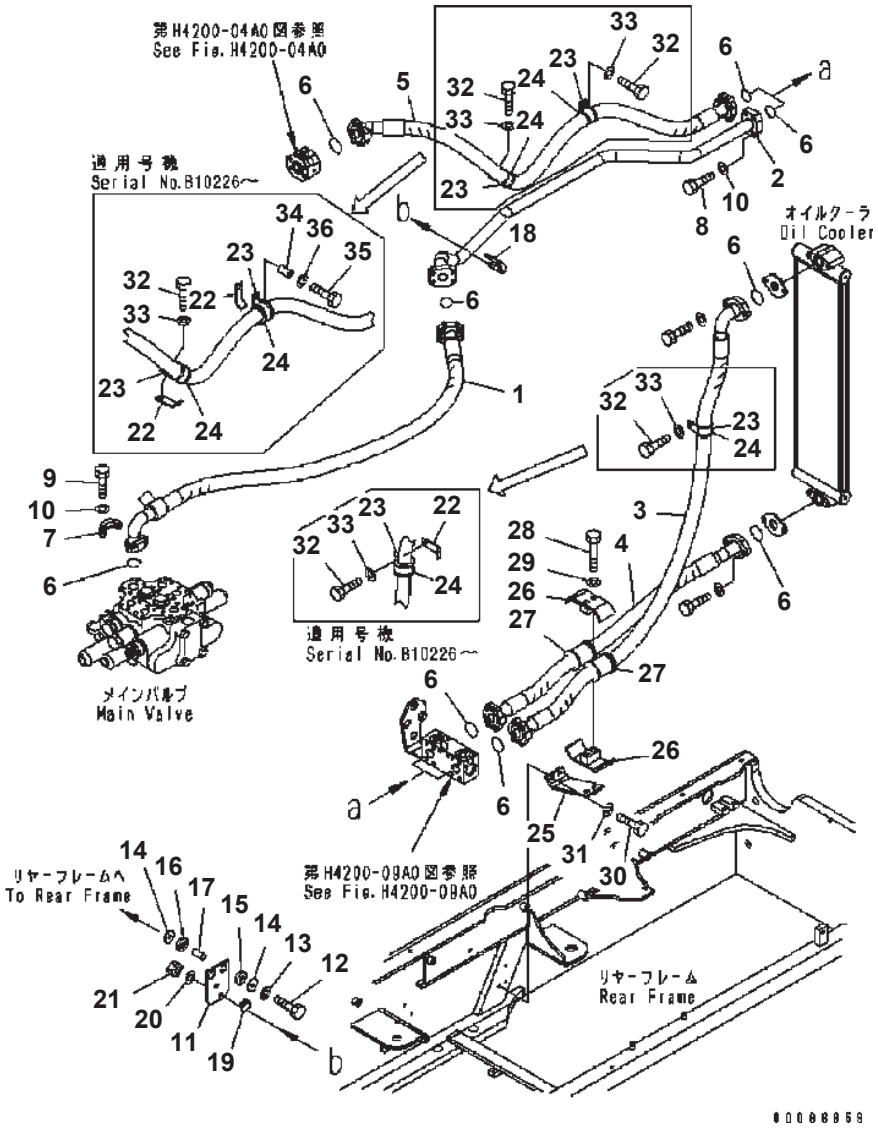

HYDRAULIC PIPING (RETURN LINE 1/2)

Item	Part No.	Description	Qty	Options
1	419-62-33374	HOSE	1	SN:B10001--
2	419-62-31252	TUBE	1	SN:B10001--
3	419-62-33385	HOSE	1	SN:B10001--
4	419-62-33394	HOSE	1	SN:B10001--
5	419-62-33683	HOSE	1	SN:B10001--
6	07000-13038	O-RING	9	SN:B10001--
7	07371-31255	FLANGE {SPLIT}	12	SN:B10001--
8	07372-21040	BOLT	4	SN:B10001--
9	07372-21035	BOLT	24	SN:B10001--
10	01643-51032	WASHER	28	SN:B10001--
11	419-62-31261	PLATE	1	SN:B10001--
12	01010-81050	BOLT	2	SN:B10001--
13	01643-31032	WASHER	2	SN:B10001--
14	415-64-13120	WASHER	4	SN:B10001--
15	419-43-17930	CUSHION	2	SN:B10001--
16	415-64-13130	CUSHION	2	SN:B10001--
17	417-62-14130	SPACER	2	SN:B10001--
18	07283-33450	CLIP	1	SN:B10001--
19	07283-53444	SEAT	1	SN:B10001--
20	01643-31032	WASHER	2	SN:B10001--
21	01597-01009	NUT	2	SN:B10001--
22	419-62-32130	CLAMP	3	SN:B10226--
23	419-62-32140	CLAMP	3	SN:B10226--
	20Y-62-15950	CLIP	3	SN:B10001--B10225
24	419-62-32150	CUSHION	3	SN:B10226--
	419-62-13470	RUBBER	3	SN:B10001--B10225
25	419-62-33141	BRACKET	1	SN:B10001--
26	07094-31228	CLAMP	2	SN:B10001--
27	07095-01241	CUSHION	2	SN:B10001--
28	01010-81290	BOLT	2	SN:B10001--
29	01643-31232	WASHER	2	SN:B10001--
30	01010-81025	BOLT	2	SN:B10001--
31	01643-31032	WASHER	2	SN:B10001--
32	01010-81030	BOLT	2	SN:B10226--
	01010-81025	BOLT	3	SN:B10001--B10225
33	01643-31032	WASHER	2	SN:B10226--
	01643-31032	WASHER	3	SN:B10001--B10225
34	22D-62-12440	SPACER	1	SN:B10226--
35	01010-81070	BOLT	1	SN:B10226--
36	01643-31032	WASHER	1	SN:B10226--

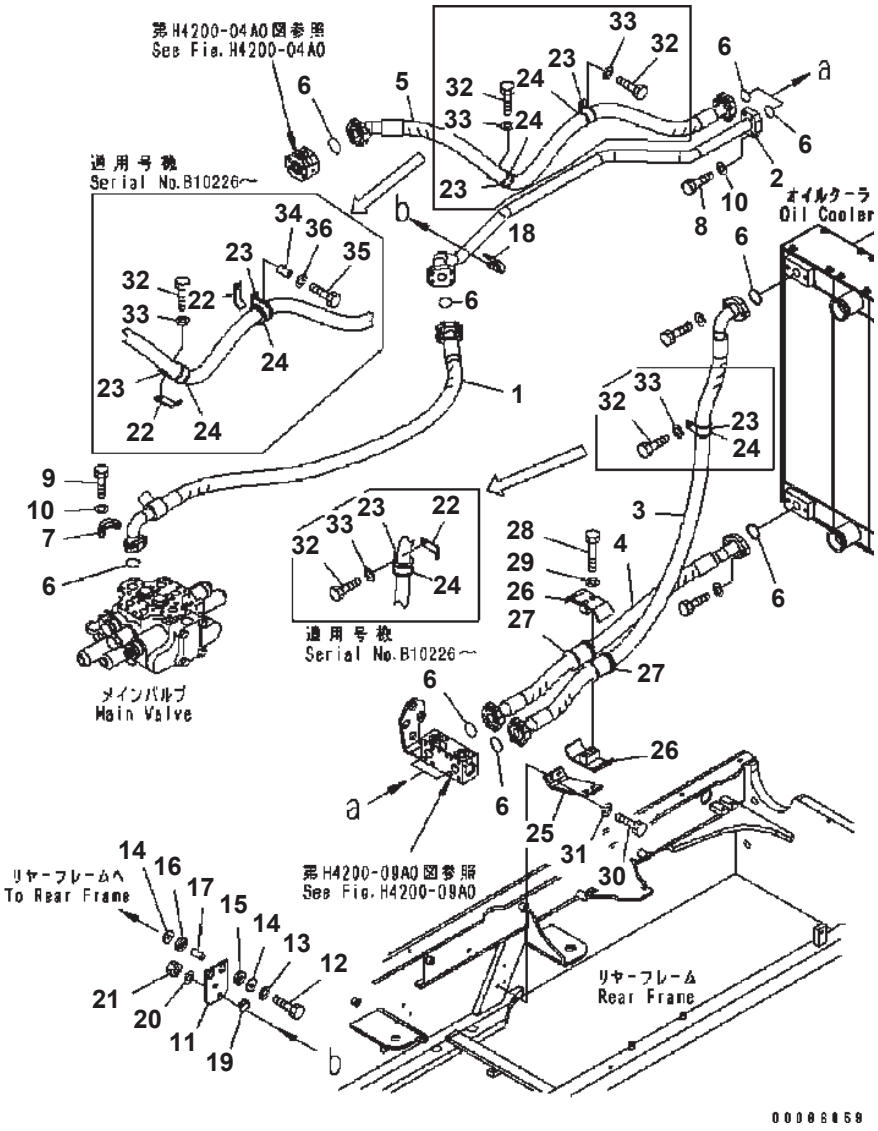

HYDRAULIC PIPING (RETURN LINE 1/2) (FOR SUGAR CANE) (#B10186-B10402)

Item	Part No.	Description	Qty	Options
1	419-62-33374	HOSE	1	SN:B10186--B10402
2	419-62-31252	TUBE	1	SN:B10186--@
3	419-62-33385	HOSE	1	SN:B10186--@
4	419-62-33394	HOSE	1	SN:B10186--@
5	419-62-33683	HOSE	1	SN:B10186--@
6	07000-13038	O-RING	9	SN:B10186--B10402
7	07371-31255	FLANGE, SPLIT	12	SN:B10186--B10402
8	07372-21040	BOLT	4	SN:B10186--@
9	07372-21035	BOLT	24	SN:B10186--B10402
10	01643-51032	WASHER	28	SN:B10186--B10402
11	419-62-31261	PLATE	1	SN:B10186--@
12	01010-81050	BOLT	2	SN:B10186--@
13	01643-31032	WASHER	2	SN:B10186--@
14	415-64-13120	WASHER	4	SN:B10186--@
15	419-43-17930	CUSHION	2	SN:B10186--@
16	415-64-13130	CUSHION	2	SN:B10186--@
17	417-62-14130	SPACER	2	SN:B10186--@
18	07283-33450	CLIP	1	SN:B10186--@
19	07283-53444	SEAT	1	SN:B10186--@
20	01643-31032	WASHER	2	SN:B10186--@
21	01597-01009	NUT	2	SN:B10186--@
22	419-62-32130	CLAMP	3	SN:B10226--@
23	419-62-32140	CLAMP	3	SN:B10226--@
	20Y-62-15950	CLIP	3	SN:B10186--B10225
24	419-62-32150	CUSHION	3	SN:B10226--@
	419-62-13470	RUBBER	3	SN:B10186--B10225
25	419-62-33141	BRACKET	1	SN:B10186--@
26	07094-31228	CLAMP	2	SN:B10186--@
27	07095-01241	CUSHION	2	SN:B10186--@
28	01010-81290	BOLT	2	SN:B10186--@
29	01643-31232	WASHER	2	SN:B10186--@
30	01010-81025	BOLT	2	SN:B10186--@
31	01643-31032	WASHER	2	SN:B10186--@
32	01010-81030	BOLT	2	SN:B10226--@
	01010-81025	BOLT	3	SN:B10186--B10225
33	01643-31032	WASHER	2	SN:B10226--@
	01643-31032	WASHER	3	SN:B10186--B10225
34	22D-62-12440	SPACER	1	SN:B10226--@
35	01010-81070	BOLT	1	SN:B10226--@

WA320-5 S/N B10001-UP

HYDRAULIC PIPING (RETURN LINE 1/2) (FOR SUGAR CANE) (#B10186-B10402)

Item	Part No.	Description	Qty	Options
36	01643-31032	WASHER	1	SN:B10226--@

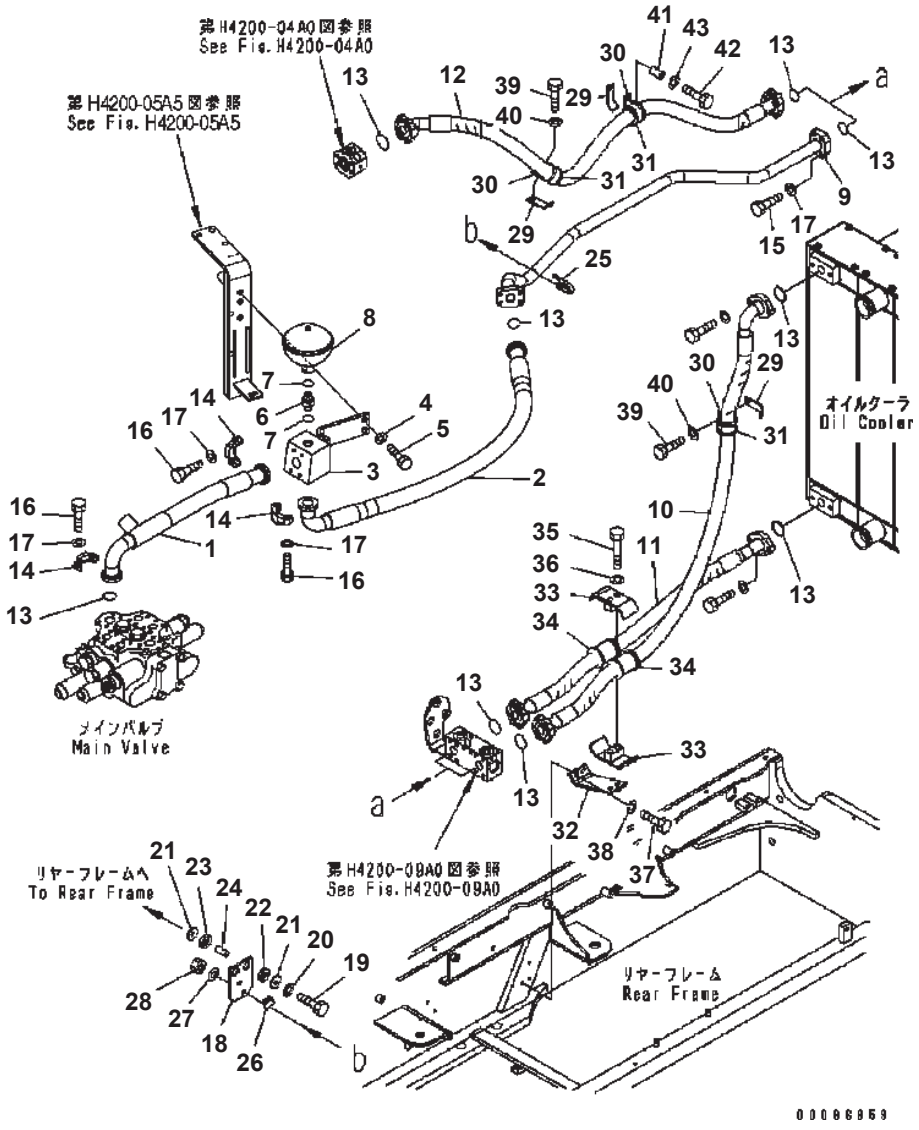

HYDRAULIC PIPING (RETURN LINE 1/2) (FOR SUGAR CANE) (#B10403-)

Item	Part No.	Description	Qty	Options
1	419-62-34830	HOSE	1	SN:B10403--
2	419-62-34840	HOSE	1	SN:B10403--
3	419-62-34820	BLOCK	1	SN:B10403--
4	01010-81235	BOLT	2	SN:B10403--
5	01643-31232	WASHER	2	SN:B10403--
6	203-973-5610	UNION	1	SN:B10403--
7	07002-12034	O-RING	2	SN:B10403--
8	418-62-33680	ACCUMULATOR	1	SN:B10403--
9	419-62-31252	TUBE	1	SN:B10186--
10	419-62-33385	HOSE	1	SN:B10186--
11	419-62-33394	HOSE	1	SN:B10186--
12	419-62-33683	HOSE	1	SN:B10186--
13	07000-13038	O-RING	11	SN:B10403--
14	07371-31255	FLANGE, SPLIT	16	SN:B10403--
15	07372-21040	BOLT	4	SN:B10186--
16	07372-21035	BOLT	32	SN:B10403--
17	01643-51032	WASHER	36	SN:B10403--
18	419-62-31261	PLATE	1	SN:B10186--
19	01010-81050	BOLT	2	SN:B10186--
20	01643-31032	WASHER	2	SN:B10186--
21	415-64-13120	WASHER	4	SN:B10186--
22	419-43-17930	CUSHION	2	SN:B10186--
23	415-64-13130	CUSHION	2	SN:B10186--
24	417-62-14130	SPACER	2	SN:B10186--
25	07283-33450	CLIP	1	SN:B10186--
26	07283-53444	SEAT	1	SN:B10186--
27	01643-31032	WASHER	2	SN:B10186--
28	01597-01009	NUT	2	SN:B10186--
29	419-62-32130	CLAMP	3	SN:B10226--
30	419-62-32140	CLAMP	3	SN:B10226--
31	419-62-32150	CUSHION	3	SN:B10226--
32	419-62-33141	BRACKET	1	SN:B10186--
33	07094-31228	CLAMP	2	SN:B10186--
34	07095-01241	CUSHION	2	SN:B10186--
35	01010-81290	BOLT	2	SN:B10186--
36	01643-31232	WASHER	2	SN:B10186--
37	01010-81025	BOLT	2	SN:B10186--
38	01643-31032	WASHER	2	SN:B10186--
39	01010-81030	BOLT	2	SN:B10226--

WA320-5 S/N B10001-UP

HYDRAULIC PIPING (RETURN LINE 1/2) (FOR SUGAR CANE) (#B10403-)

Item	Part No.	Description	Qty	Options
40	01643-31032	WASHER	2	SN:B10226--
41	22D-62-12440	SPACER	1	SN:B10226--
42	01010-81070	BOLT	1	SN:B10226--
43	01643-31032	WASHER	1	SN:B10226--

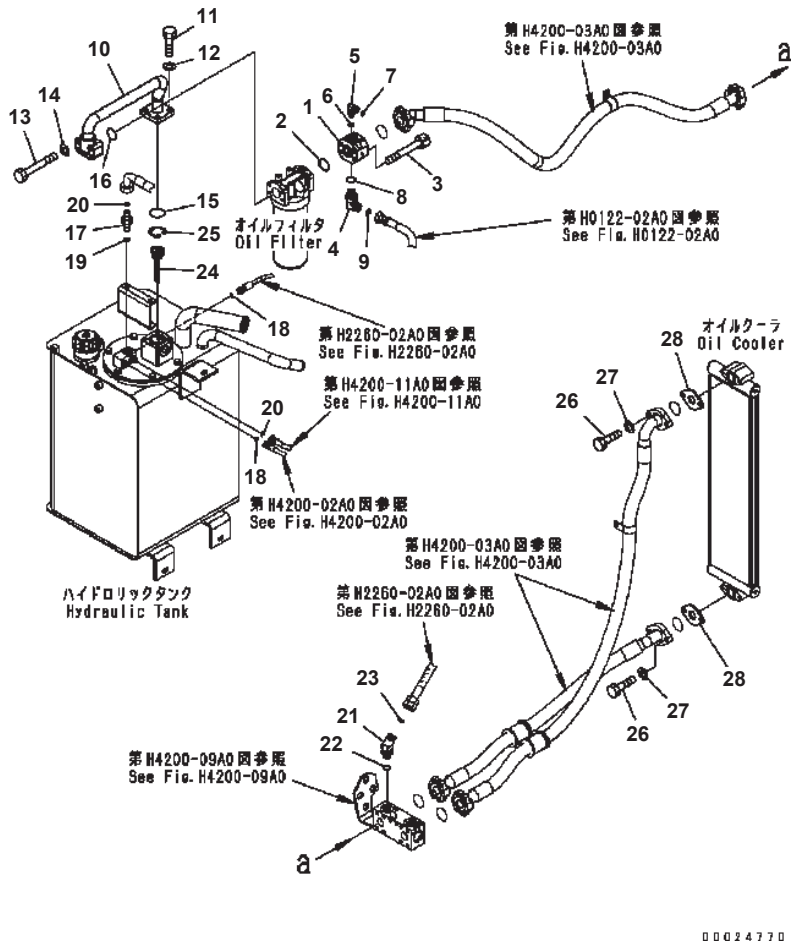

WA320-5 S/N B10001-UP

HYDRAULIC PIPING (RETURN LINE 2/2)

Item	Part No.	Description	Qty	Options
1	419-62-33242	FLANGE	1	SN:B10001--
2	07000-13038	O-RING	1	SN:B10001--
3	01252-71060	BOLT	4	SN:B10001--
4	02782-10522	ELBOW	1	SN:B10001--
5	02782-10313	ELBOW	1	SN:B10001--
6	07002-11423	O-RING	1	SN:B10001--
7	02896-11009	O-RING	1	SN:B10001--
8	07002-12434	O-RING	1	SN:B10001--
9	02896-11015	O-RING	1	SN:B10001--
10	419-62-33571	TUBE	1	SN:B10001--
11	01010-81035	BOLT	4	SN:B10001--
12	01643-31032	WASHER	4	SN:B10001--
13	01010-81065	BOLT	4	SN:B10001--
14	01643-31032	WASHER	4	SN:B10001--
15	07000-13050	O-RING	1	SN:B10001--
16	07000-13035	O-RING	1	SN:B10001--
17	02781-0031D	UNION	1	SN:B10001--
18	02896-11008	O-RING	2	SN:B10001--
19	07002-11423	O-RING	1	SN:B10001--
20	02896-11009	O-RING	2	SN:B10001--
21	20U-62-41680	ELBOW	1	SN:B10001--
22	07002-12034	O-RING	1	SN:B10001--
23	02896-11015	O-RING	1	SN:B10001--
24	419-62-31640	VALVE ASS'Y	1	SN:B10001--
25	04065-04218	RING {SNAP}	1	SN:B10001--
26	01010-81045	BOLT	4	SN:B10001--
27	01643-31032	WASHER	4	SN:B10001--
28	418-62-33391	FLANGE	2	SN:B10001--

Ref. H4200-04A0 Page 180190

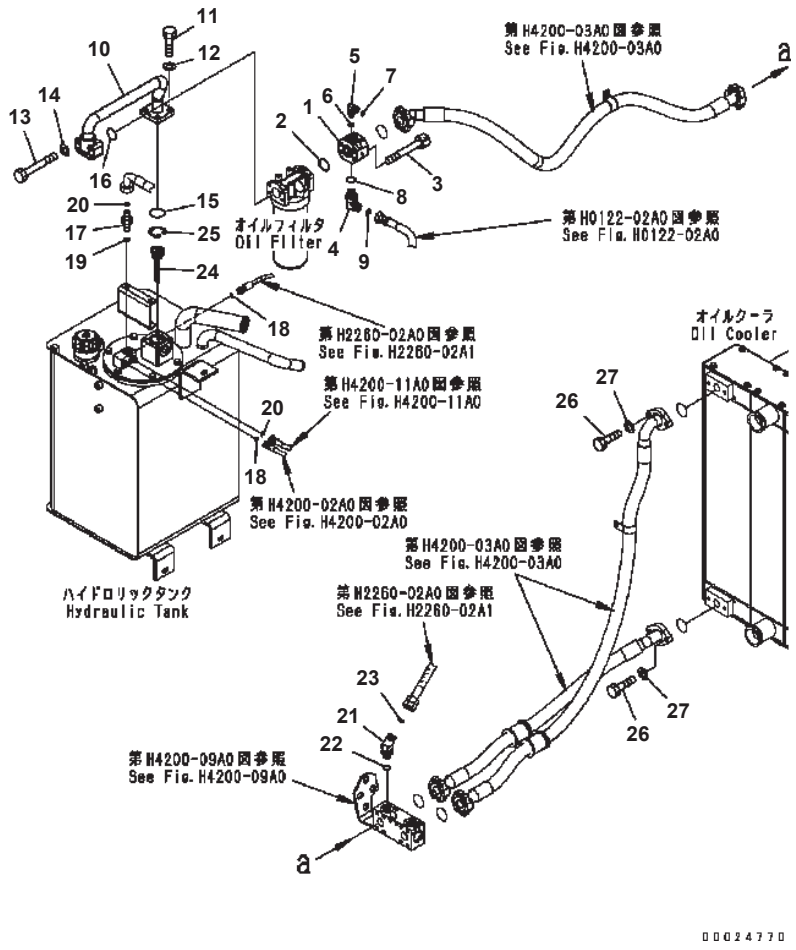

HYDRAULIC PIPING (RETURN LINE 2/2) (FOR SUGAR CANE) (#B10186-)

Item	Part No.	Description	Qty	Options
1	419-62-33242	FLANGE	1	SN:B10186--
2	07000-13038	O-RING	1	SN:B10186--
3	01252-71060	BOLT	4	SN:B10186--
4	02782-10522	ELBOW	1	SN:B10186--
5	02782-10313	ELBOW	1	SN:B10186--
6	07002-11423	O-RING	1	SN:B10186--
7	02896-11009	O-RING	1	SN:B10186--
8	07002-12434	O-RING	1	SN:B10186--
9	02896-11015	O-RING	1	SN:B10186--
10	419-62-33571	TUBE	1	SN:B10186--
11	01010-81035	BOLT	4	SN:B10186--
12	01643-31032	WASHER	4	SN:B10186--
13	01010-81065	BOLT	4	SN:B10186--
14	01643-31032	WASHER	4	SN:B10186--
15	07000-13050	O-RING	1	SN:B10186--
16	07000-13035	O-RING	1	SN:B10186--
17	02781-0031D	UNION	1	SN:B10186--
18	02896-11008	O-RING	2	SN:B10186--
19	07002-11423	O-RING	1	SN:B10186--
20	02896-11009	O-RING	2	SN:B10186--
21	20U-62-41680	ELBOW	1	SN:B10186--
22	07002-12034	O-RING	1	SN:B10186--
23	02896-11015	O-RING	1	SN:B10186--
24	419-62-31640	VALVE ASS'Y	1	SN:B10186--
25	04065-04218	RING {SNAP}	1	SN:B10186--
26	01010-81035	BOLT	4	SN:B10186--
27	01643-31032	WASHER	4	SN:B10186--

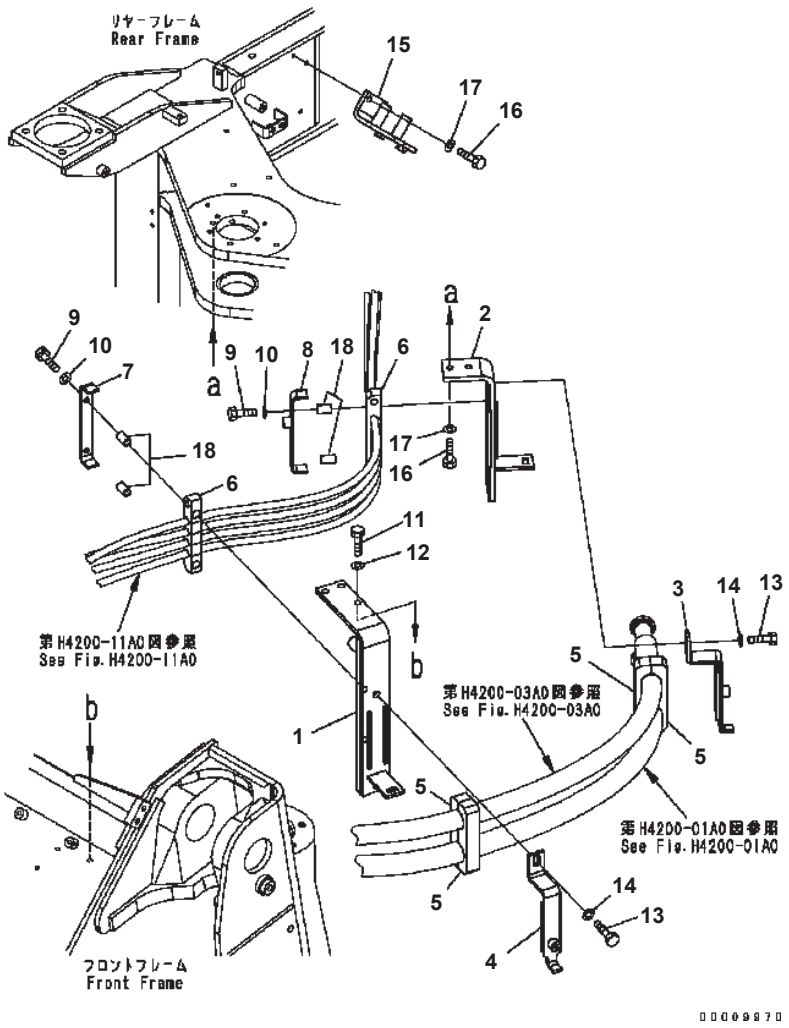

HYDRAULIC PIPING (PIPING MOUNT)

Item	Part No.	Description	Qty	Options
1	419-62-34332	BRACKET	1	SN:B10001--
2	419-62-33930	BRACKET	1	SN:B10001--
3	419-62-33922	BRACKET	1	SN:B10001--
4	419-62-31920	BRACKET	1	SN:B10001--
5	419-62-33711	RUBBER	4	SN:B10001--
6	419-62-23990	RUBBER	2	SN:B10001--
7	421-62-23730	PLATE	1	SN:B10001--
8	419-62-34390	BRACKET	1	SN:B10001--
9	01010-81050	BOLT	4	SN:B10001--
10	01643-31032	WASHER	4	SN:B10001--
11	01010-81230	BOLT	5	SN:B10001--
12	01643-31232	WASHER	5	SN:B10001--
13	01010-81240	BOLT	2	SN:B10001--
14	01643-31232	WASHER	2	SN:B10001--
15	419-62-31294	BRACKET	1	SN:B10001--
16	01010-81020	BOLT	2	SN:B10001--
17	01643-31032	WASHER	2	SN:B10001--
18	419-43-17910	SPACER	4	SN:B10001--

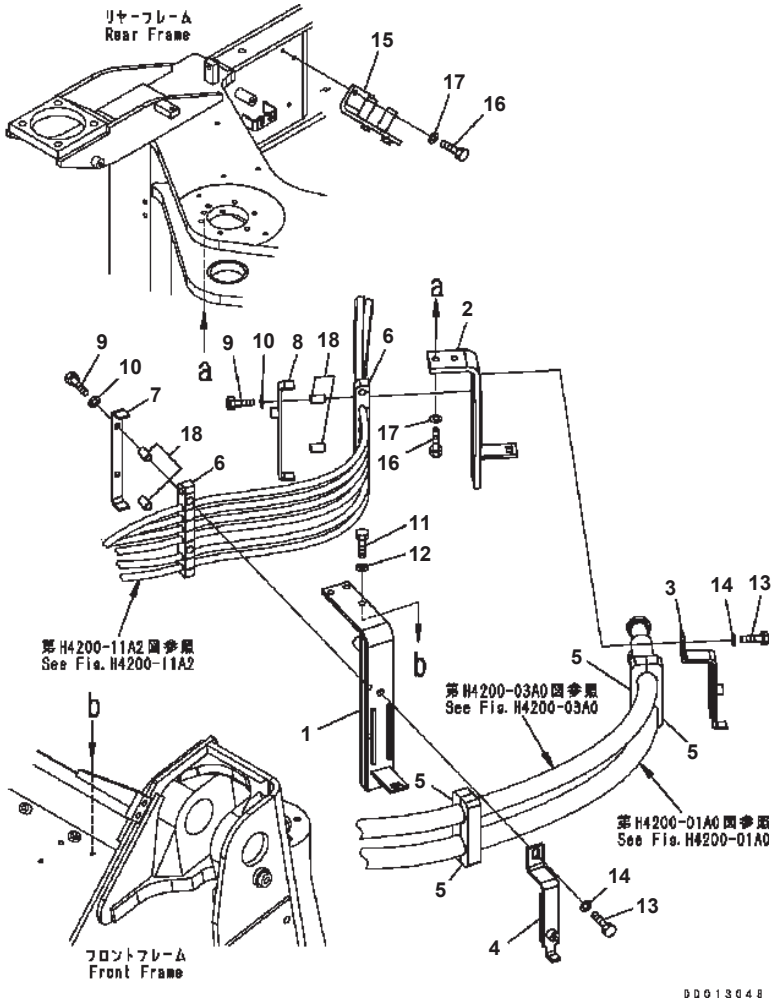

HYDRAULIC PIPING (PIPING MOUNT) (FOR EMERGENCY STEERING, 3-SPOOL VALVE)

Item	Part No.	Description	Qty	Options
1	419-62-34332	BRACKET	1	SN:B10001--
2	419-62-33930	BRACKET	1	SN:B10001--
3	419-62-33922	BRACKET	1	SN:B10001--
4	419-62-31920	BRACKET	1	SN:B10001--
5	419-62-33711	RUBBER	4	SN:B10001--
6	419-877-2330	RUBBER	2	SN:B10001--
7	421-877-2360	PLATE	1	SN:B10001--
8	419-877-3380	PLATE	1	SN:B10001--
9	01010-81050	BOLT	4	SN:B10001--
10	01643-31032	WASHER	4	SN:B10001--
11	01010-81230	BOLT	5	SN:B10001--
12	01643-31232	WASHER	5	SN:B10001--
13	01010-81240	BOLT	2	SN:B10001--
14	01643-31232	WASHER	2	SN:B10001--
15	419-62-31294	BRACKET	1	SN:B10001--
16	01010-81020	BOLT	2	SN:B10001--
17	01643-31032	WASHER	2	SN:B10001--
18	419-43-17910	SPACER	4	SN:B10001--

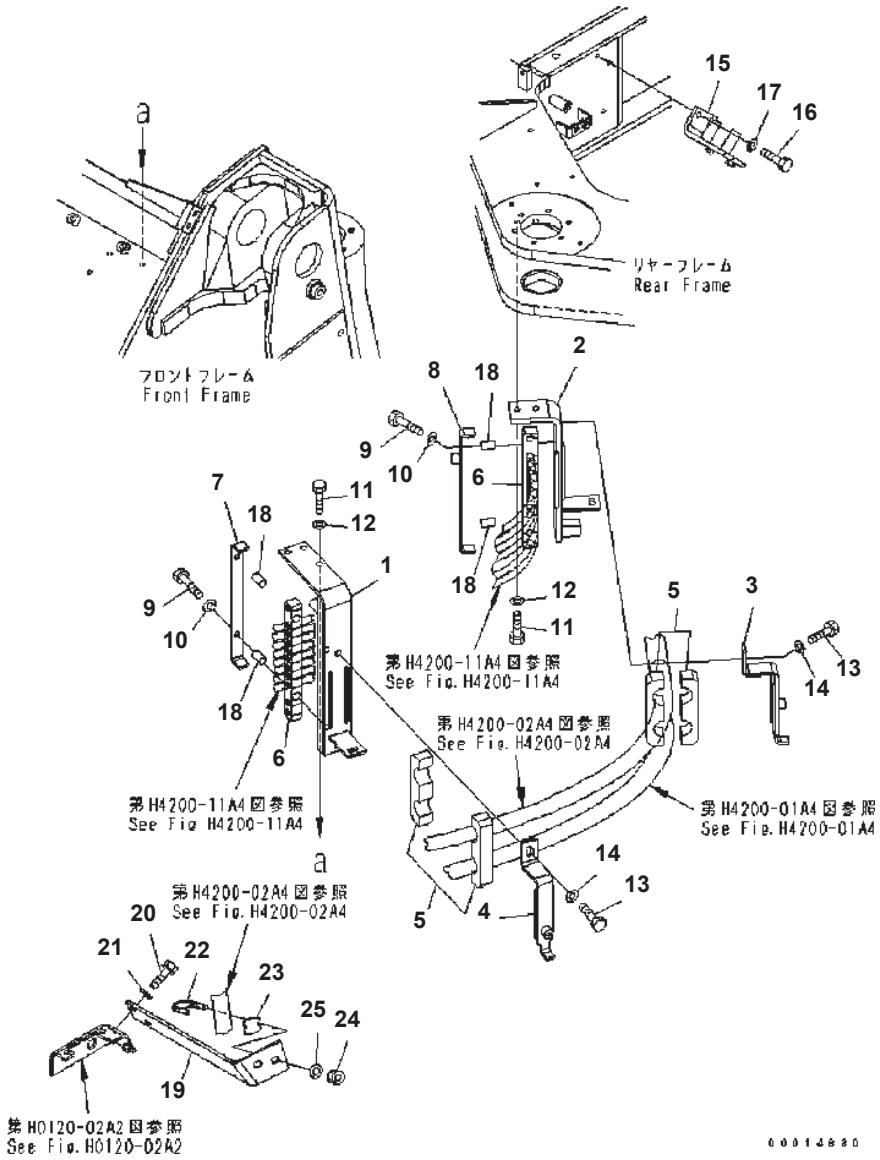

HYDRAULIC PIPING (PIPING MOUNT) (4-SPOOL VALVE)

Item	Part No.	Description	Qty	Options
1	419-62-34333	BRACKET	1	SN:B10001--
2	419-V88-3350	BRACKET	1	SN:B10001--
3	419-62-33922	BRACKET	1	SN:B10001--
4	419-62-31920	BRACKET	1	SN:B10001--
5	419-62-33711	RUBBER	4	SN:B10001--
6	419-V89-2451	RUBBER	2	SN:B10001--
7	419-V89-2311	PLATE	1	SN:B10001--
8	419-V88-3360	BRACKET	1	SN:B10001--
9	01010-81050	BOLT	4	SN:B10001--
10	01643-31032	WASHER	4	SN:B10001--
11	01010-81230	BOLT	5	SN:B10001--
12	01643-31232	WASHER	5	SN:B10001--
13	01010-81240	BOLT	2	SN:B10001--
14	01643-31232	WASHER	2	SN:B10001--
15	419-62-31294	BRACKET	1	SN:B10001--
16	01010-81020	BOLT	2	SN:B10001--
17	01643-31032	WASHER	2	SN:B10001--
18	419-43-17910	SPACER	4	SN:B10001--
19	419-V88-3391	PLATE	1	SN:B10001--
20	01010-81230	BOLT	2	SN:B10001--
21	01643-31232	WASHER	2	SN:B10001--
22	07283-33450	CLIP	1	SN:B10001--
23	07283-53444	SEAT	1	SN:B10001--
24	01597-01009	NUT	2	SN:B10001--
25	01643-31032	WASHER	2	SN:B10001--

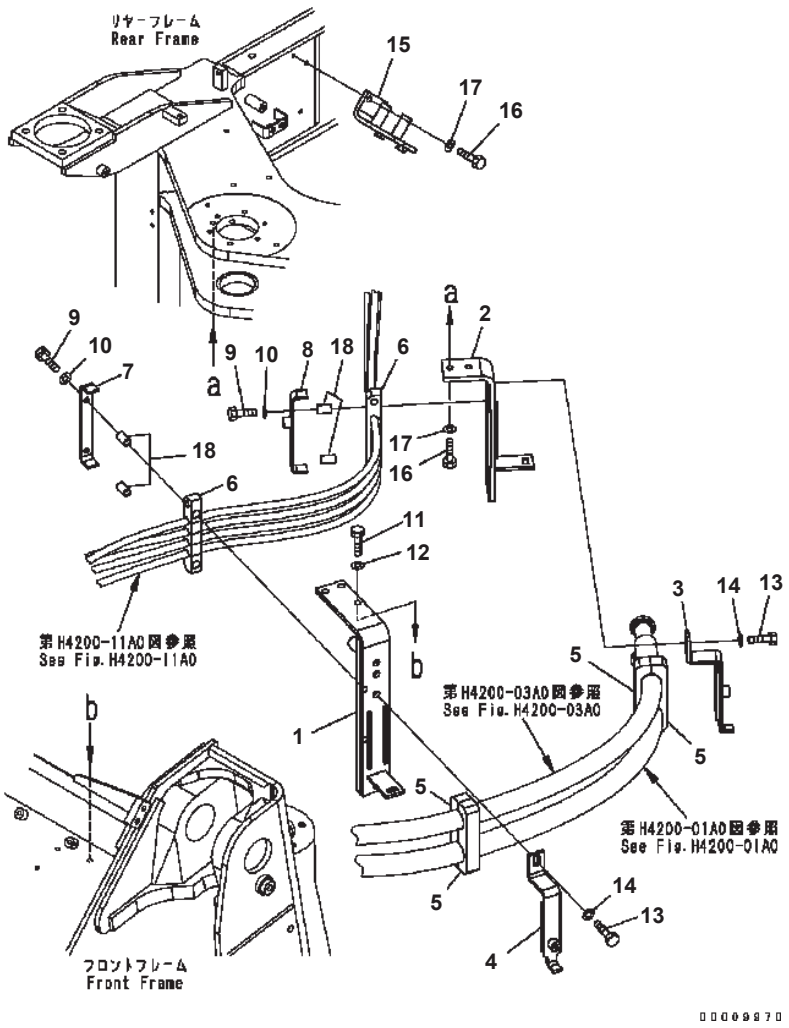

HYDRAULIC PIPING (PIPING MOUNT) (SUGAR CANE) (#B10403-)

Item	Part No.	Description	Qty	Options
1	419-62-B4440	BRACKET	1	SN:B10403--
2	419-62-33930	BRACKET	1	SN:B10403--
3	419-62-33922	BRACKET	1	SN:B10403--
4	419-62-31920	BRACKET	1	SN:B10403--
5	419-62-33711	RUBBER	4	SN:B10403--
6	419-62-23990	RUBBER	2	SN:B10403--
7	421-62-23730	PLATE	1	SN:B10403--
8	419-62-34390	BRACKET	1	SN:B10403--
9	01010-81050	BOLT	4	SN:B10403--
10	01643-31032	WASHER	4	SN:B10403--
11	01010-81230	BOLT	5	SN:B10403--
12	01643-31232	WASHER	5	SN:B10403--
13	01010-81240	BOLT	2	SN:B10403--
14	01643-31232	WASHER	2	SN:B10403--
15	419-62-31294	BRACKET	1	SN:B10403--
16	01010-81020	BOLT	2	SN:B10403--
17	01643-31032	WASHER	2	SN:B10403--
18	419-43-17910	SPACER	4	SN:B10403--

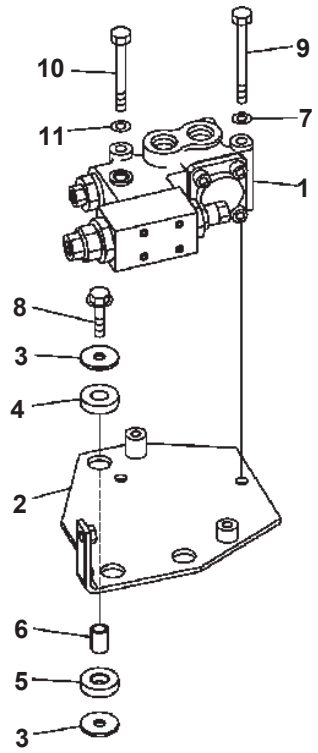

00009972

WA320-5 S/N B10001-UP

HYDRAULIC PIPING (CUT-OFF VALVE)

Item	Part No.	Description	Qty	Options
1	(702-21-04370)	VALVE ASS'Y	1	SN:B10001--
2	419-64-35134	BRACKET	1	SN:B10001--
3	415-64-13120	WASHER	6	SN:B10001--
4	419-43-17930	CUSHION	3	SN:B10001--
5	415-64-13130	CUSHION	3	SN:B10001--
6	417-62-14130	SPACER	3	SN:B10001--
7	01643-31032	WASHER	1	SN:B10001--
8	01435-01050	BOLT	3	SN:B10001--
9	01011-81005	BOLT	1	SN:B10001--
10	01010-81090	BOLT	1	SN:B10001--
11	01643-31032	WASHER	1	SN:B10001--

Ref. H4200-06A0 Page 180240

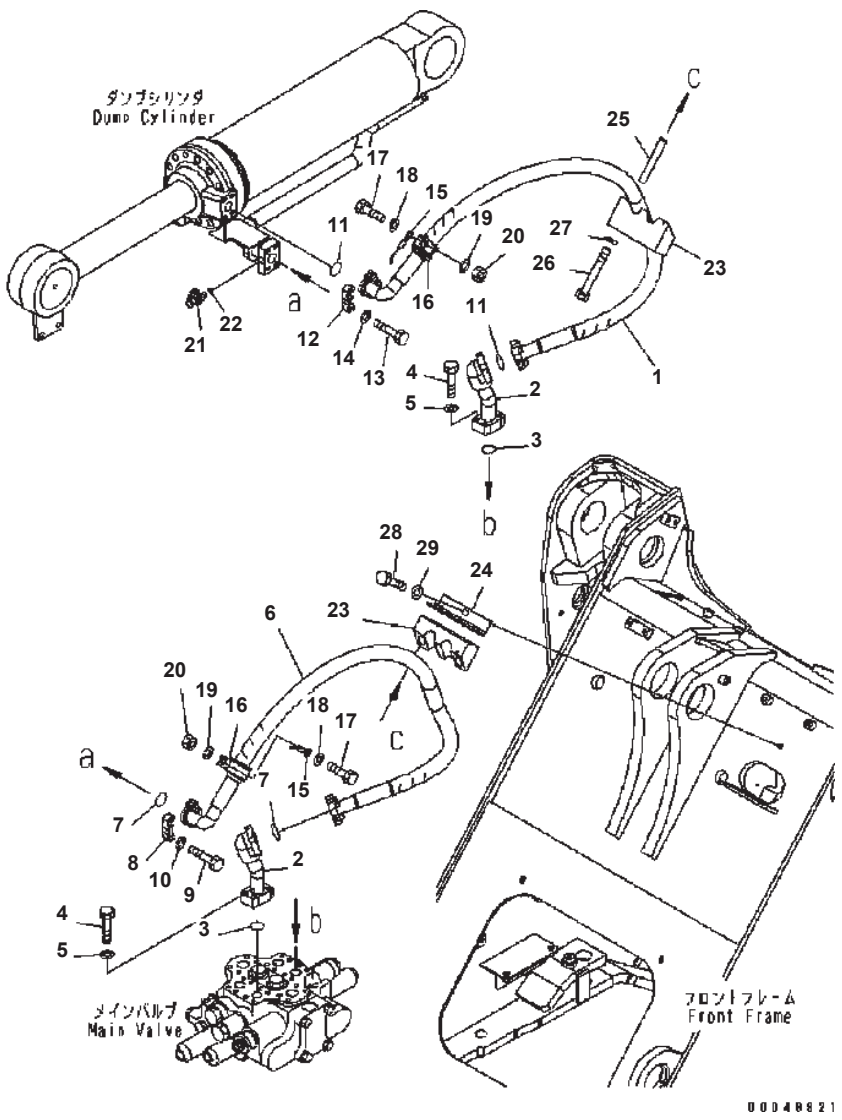

HYDRAULIC PIPING (DUMP CYLINDER LINE)

Item	Part No.	Description	Qty	Options
1	419-62-33584	HOSE	1	SN:B10001--
2	419-62-34420	TUBE	2	SN:B10001--
3	07000-13035	O-RING	2	SN:B10001--
4	07372-21040	BOLT	8	SN:B10001--
5	01643-51032	WASHER	8	SN:B10001--
6	419-62-33492	HOSE	1	SN:B10001--
7	07000-13032	O-RING	2	SN:B10001--
8	07371-31049	FLANGE {SPLIT}	4	SN:B10001--
9	07372-21035	BOLT	8	SN:B10001--
10	01643-51032	WASHER	8	SN:B10001--
11	07000-13032	O-RING	2	SN:B10001--
12	07371-31049	FLANGE {SPLIT}	4	SN:B10001--
13	07372-21035	BOLT	8	SN:B10001--
14	01643-51032	WASHER	8	SN:B10001--
15	419-62-13460	WIRE	1	SN:B10001--
16	113-899-7950	CLIP	2	SN:B10001--
17	01010-81230	BOLT	2	SN:B10001--
18	01643-31232	WASHER	2	SN:B10001--
19	01643-31232	WASHER	2	SN:B10001--
20	01580-11210	NUT	2	SN:B10001--
21	799-101-5220	NIPPLE	1	SN:B10001--
22	07002-11023	O-RING	1	SN:B10001--
23	419-62-33553	CLAMP	1	SN:B10001--
24	419-62-33512	PLATE	1	SN:B10001--
25	195-01-16261	COLLAR	2	SN:B10001--
26	01011-81045	BOLT	2	SN:B10001--
27	01643-31032	WASHER	2	SN:B10001--
28	01010-81020	BOLT	1	SN:B10001--
29	01643-31032	WASHER	1	SN:B10001--

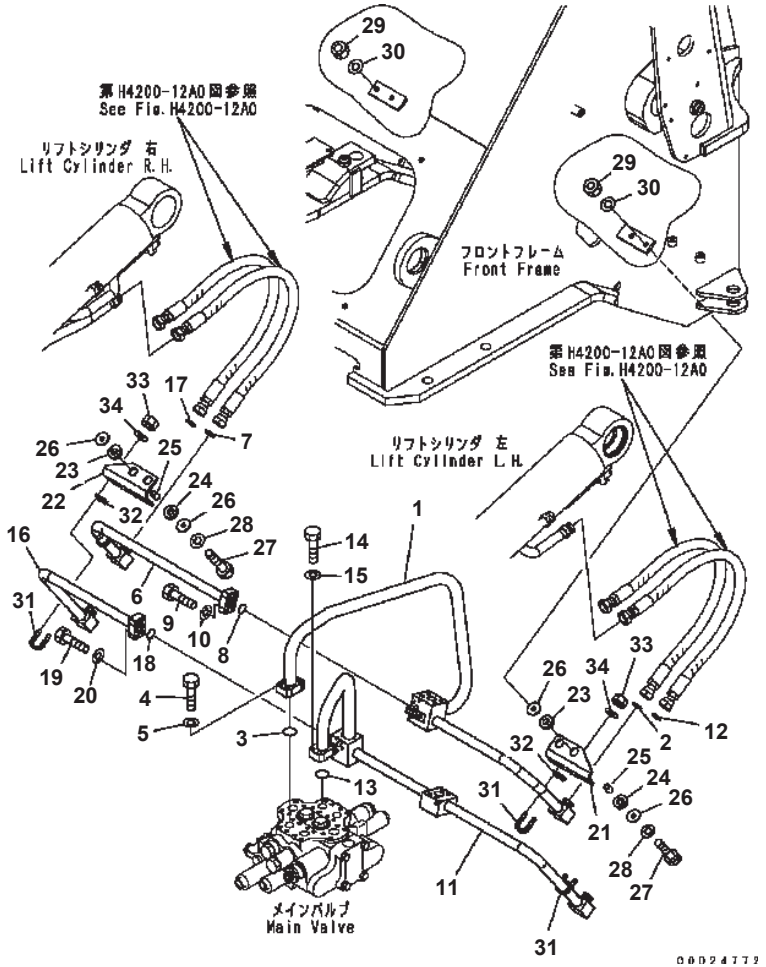

HYDRAULIC PIPING (LIFT CYLINDER LINE)

Item	Part No.	Description	Qty	Options
1	419-62-34182	TUBE	1	SN:B10001--
2	02896-11018	O-RING	1	SN:B10001--
3	07000-13035	O-RING	1	SN:B10001--
4	07372-21045	BOLT	4	SN:B10001--
5	01643-51032	WASHER	4	SN:B10001--
6	419-62-33271	TUBE	1	SN:B10001--
7	02896-11018	O-RING	1	SN:B10001--
8	07000-13025	O-RING	1	SN:B10001--
9	01010-80835	BOLT	4	SN:B10001--
10	01643-50823	WASHER	4	SN:B10001--
11	419-62-34162	TUBE	1	SN:B10001--
12	02896-11018	O-RING	1	SN:B10001--
13	07000-13035	O-RING	1	SN:B10001--
14	07372-21045	BOLT	4	SN:B10001--
15	01643-51032	WASHER	4	SN:B10001--
16	419-62-33250	TUBE	1	SN:B10001--
17	02896-11018	O-RING	1	SN:B10001--
18	07000-13025	O-RING	1	SN:B10001--
19	01010-80835	BOLT	4	SN:B10001--
20	01643-50823	WASHER	4	SN:B10001--
21	423-62-23710	BRACKET	1	SN:B10001--
22	423-62-23720	BRACKET	1	SN:B10001--
23	415-64-13130	CUSHION	4	SN:B10001--
24	419-43-17930	CUSHION	4	SN:B10001--
25	417-54-13470	SPACER	4	SN:B10001--
26	415-64-13120	WASHER	8	SN:B10001--
27	01010-81060	BOLT	4	SN:B10001--
28	01643-31032	WASHER	4	SN:B10001--
29	01580-11008	NUT	4	SN:B10001--
30	01643-31032	WASHER	4	SN:B10001--
31	07283-32738	CLIP	4	SN:B10001--
32	07283-52737	SEAT	4	SN:B10001--
33	01597-01009	NUT	8	SN:B10001--
34	01643-31032	WASHER	8	SN:B10001--

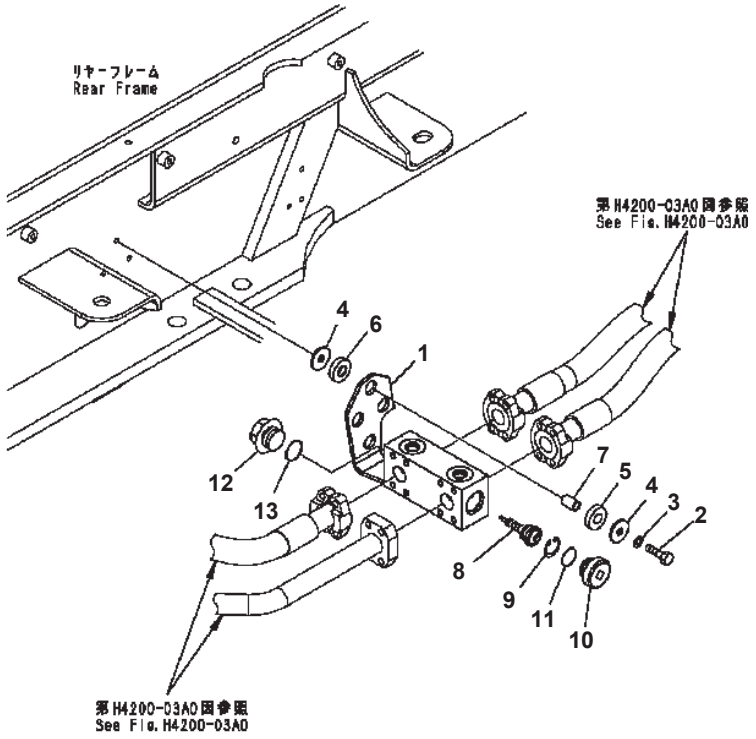

HYDRAULIC PIPING (BYPASS VALVE)

Item	Part No.	Description	Qty	Options
1	419-62-33263	BLOCK	1	SN:B10001--
2	01010-81050	BOLT	3	SN:B10001--
3	01643-31032	WASHER	3	SN:B10001--
4	415-64-13120	WASHER	6	SN:B10001--
5	419-43-17930	CUSHION	3	SN:B10001--
6	415-64-13130	CUSHION	3	SN:B10001--
7	417-62-14130	SPACER	3	SN:B10001--
8	419-62-34380	VALVE ASS'Y	1	SN:B10001--
9	04065-03212	RING, SNAP	1	SN:B10001--
10	07040-13316	PLUG	1	SN:B10001--
11	07002-13334	O-RING	1	SN:B10001--
12	07041-13612	PLUG	1	SN:B10001--
13	07002-13634	O-RING	1	SN:B10001--

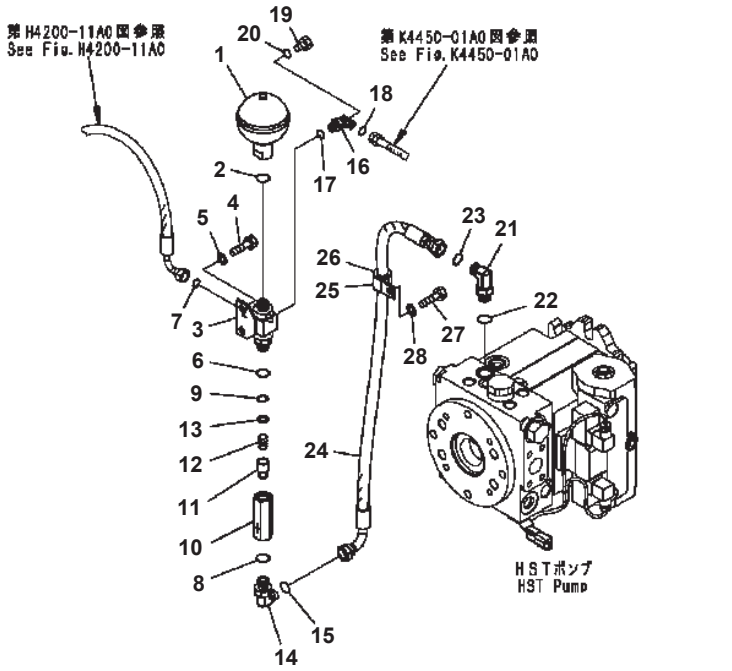

WA320-5 S/N B10001-UP

HYDRAULIC PIPING (P.P.C. PIPING 1/2)

Item	Part No.	Description	Qty	Options
1	20Y-60-11410	ACCUMULATOR	1	SN:B10001--
2	07002-12034	O-RING	1	SN:B10001--
3	418-62-34232	TEE	1	SN:B10001--
4	01010-81025	BOLT	2	SN:B10001--
5	01643-31032	WASHER	2	SN:B10001--
6	07002-12034	O-RING	1	SN:B10001--
7	02896-11009	O-RING	1	SN:B10001--
	418-62-31491	VALVE ASS'Y	1	SN:B10001--
8	07002-12034	・ O-RING	1	SN:B10001--
	205-60-64300	・ CHECK VALVE ASS'Y	1	SN:B10001--
9	04065-01410	・・ RING	1	SN:B10001--
10	205-60-64290	・・ BODY	1	SN:B10001--
11	205-60-51390	・・ POPPET	1	SN:B10001--
12	205-60-51410	・・ SPRING	1	SN:B10001--
13	205-60-51420	・・ SEAT	1	SN:B10001--
14	02782-10422	・ ELBOW	1	SN:B10001--
15	02896-11012	O-RING	1	SN:B10001--
16	02782-50210	ELBOW	1	SN:B10001--
17	07002-11423	O-RING	1	SN:B10001--
18	02896-11008	O-RING	1	SN:B10001--
19	07040-11007	PLUG	1	SN:B10001--
20	07002-11023	O-RING	1	SN:B10001--
21	418-62-35130	ELBOW	1	SN:B10001--
22	07000-12018	O-RING	1	SN:B10001--
23	02896-11012	O-RING	1	SN:B10001--
24	419-62-33622	HOSE	1	SN:B10001--
25	04434-52711	CLIP	1	SN:B10001--
26	07095-20418	CUSHION	1	SN:B10001--
27	01010-81020	BOLT	1	SN:B10001--
28	01643-31032	WASHER	1	SN:B10001--

Ref. H4200-10A0 Page 180280

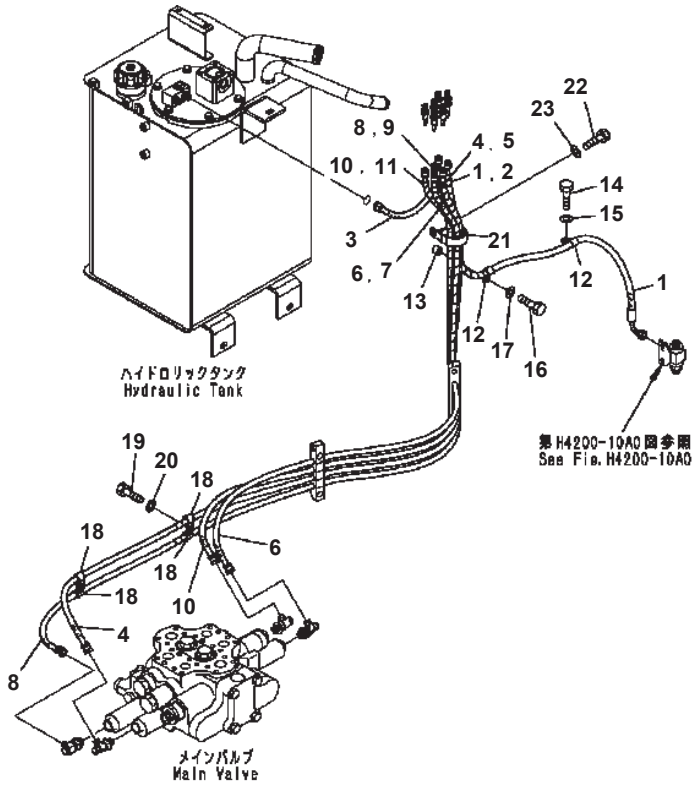

HYDRAULIC PIPING (P.P.C. PIPING 2/2)

Item	Part No.	Description	Qty	Options
1	419-62-33422	HOSE {RED-BLUE}	1	SN:B10001--
2	08210-00604	· SPIRAL TUBE	1	SN:B10001--
3	419-62-33433	HOSE {BLUE-BLACK}	1	SN:B10001--
4	419-62-33442	HOSE {RED}	1	SN:B10001--
5	08210-01206	· SPIRAL TUBE	1	SN:B10001--
6	419-62-33452	HOSE {BLUE}	1	SN:B10001--
7	08210-01206	· SPIRAL TUBE	1	SN:B10001--
8	419-62-33462	HOSE {YELLOW}	1	SN:B10001--
9	08210-01206	· SPIRAL TUBE	1	SN:B10001--
10	419-62-33472	HOSE {ORANGE}	1	SN:B10001--
11	08210-01206	· SPIRAL TUBE	1	SN:B10001--
12	04434-51512	CLIP	2	SN:B10001--
13	201-03-29160	SPACER	1	SN:B10001--
14	01010-81025	BOLT	1	SN:B10001--
15	01643-31032	WASHER	1	SN:B10001--
16	01010-81040	BOLT	1	SN:B10001--
17	01643-31032	WASHER	1	SN:B10001--
18	04434-51510	CLIP	4	SN:B10001--
19	01010-81020	BOLT	2	SN:B10001--
20	01643-31032	WASHER	2	SN:B10001--
21	21K-03-11190	CLIP	1	SN:B10001--
22	01010-81025	BOLT	1	SN:B10001--
23	01643-31032	WASHER	1	SN:B10001--

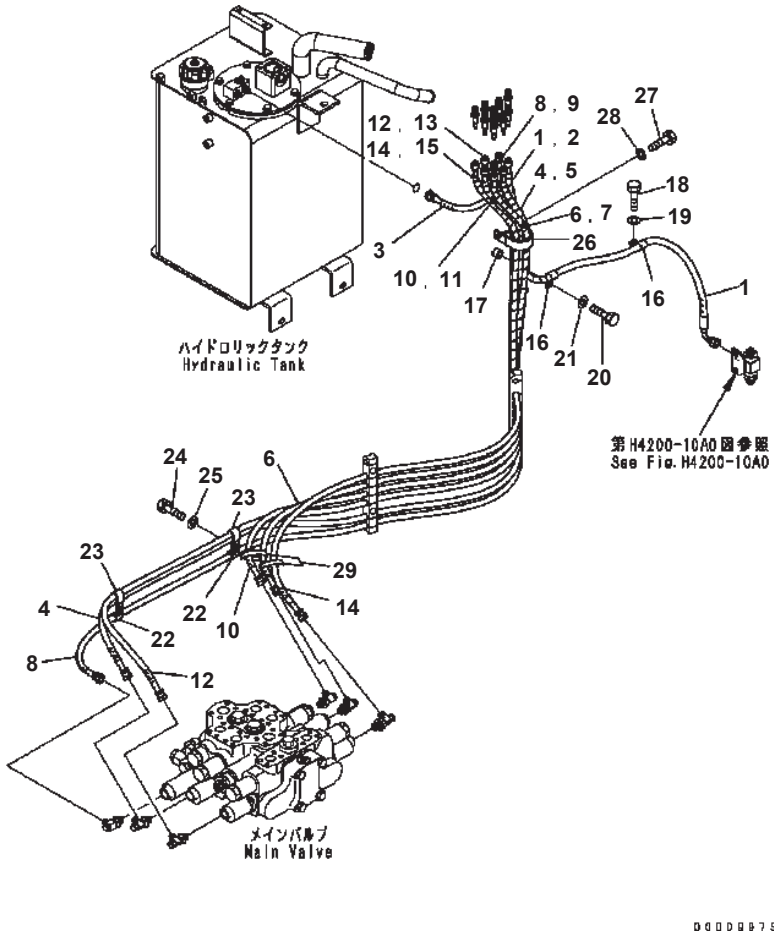

HYDRAULIC PIPING (P.P.C. PIPING 2/2) (FOR EMERGENCY STEERING. 3-SPOOL VALVE)

Item	Part No.	Description	Qty	Options
1	419-62-33422	HOSE {RED-BLUE}	1	SN:B10001--
2	08210-00604	· SPIRAL TUBE	1	SN:B10001--
3	419-62-33433	HOSE {BLUE-BLACK}	1	SN:B10001--
4	419-62-33442	HOSE {RED}	1	SN:B10001--
5	08210-01206	· SPIRAL TUBE	1	SN:B10001--
6	419-62-33452	HOSE {BLUE}	1	SN:B10001--
7	08210-01206	· SPIRAL TUBE	1	SN:B10001--
8	419-62-33462	HOSE {YELLOW}	1	SN:B10001--
9	08210-01206	· SPIRAL TUBE	1	SN:B10001--
10	419-62-33472	HOSE {ORANGE}	1	SN:B10001--
11	08210-01206	· SPIRAL TUBE	1	SN:B10001--
12	419-877-3153	HOSE	1	SN:B10107--
	419-877-3152	HOSE	1	SN:B10001--B10106
13	08210-01206	· SPIRAL TUBE	1	SN:B10001--
14	419-877-3164	HOSE	1	SN:B10098--
	419-877-3163	HOSE	1	SN:B10001--B10097
15	08210-01206	· SPIRAL TUBE	1	SN:B10001--
16	04434-51512	CLIP	2	SN:B10001--
17	201-03-29160	SPACER	1	SN:B10001--
18	01010-81025	BOLT	1	SN:B10001--
19	01643-31032	WASHER	1	SN:B10001--
20	01010-81040	BOLT	1	SN:B10001--
21	01643-31032	WASHER	1	SN:B10001--
22	04434-51510	CLIP	2	SN:B10001--
23	04435-51510	CLIP	2	SN:B10001--
24	01010-81020	BOLT	2	SN:B10001--
25	01643-31032	WASHER	2	SN:B10001--
26	21K-03-11190	CLIP	1	SN:B10001--
27	01010-81025	BOLT	1	SN:B10001--
28	01643-31032	WASHER	1	SN:B10001--
29	08034-40521	BAND	2	SN:B10001--

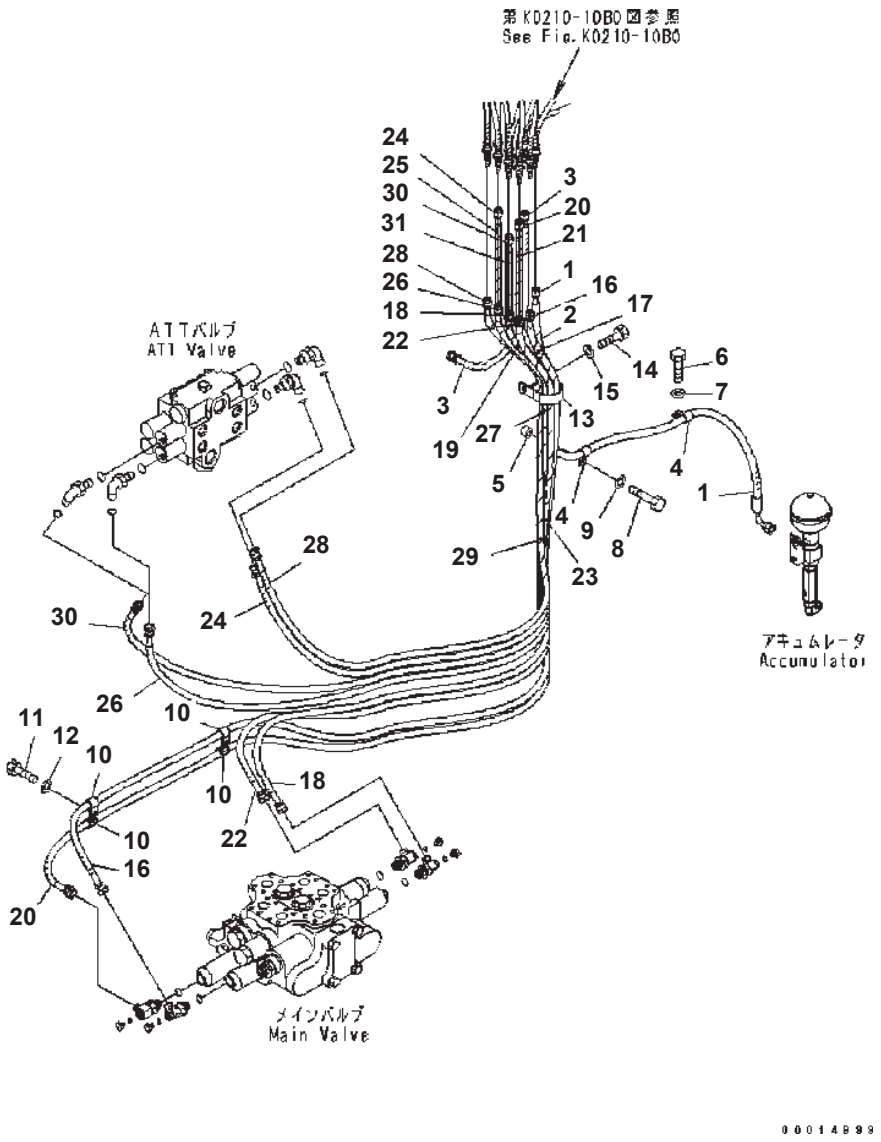

HYDRAULIC PIPING (P.P.C. PIPING 2/2) (4-SPOOL VALVE)

Item	Part No.	Description	Qty	Options
1	419-62-33422	HOSE {RED-BLUE}	1	SN:B10001--
2	08210-00604	· SPIRAL TUBE	1	SN:B10001--
3	419-62-33433	HOSE {BLUE-BLACK}	1	SN:B10001--
4	04434-51512	CLIP	2	SN:B10001--
5	201-03-29160	SPACER	1	SN:B10001--
6	01010-81025	BOLT	1	SN:B10001--
7	01643-31032	WASHER	1	SN:B10001--
8	01010-81040	BOLT	1	SN:B10001--
9	01643-31032	WASHER	1	SN:B10001--
10	04434-51510	CLIP	4	SN:B10001--
11	01010-81020	BOLT	2	SN:B10001--
12	01643-31032	WASHER	2	SN:B10001--
13	21K-03-11190	CLIP	1	SN:B10001--
14	01010-81025	BOLT	1	SN:B10001--
15	01643-31032	WASHER	1	SN:B10001--
16	419-V88-3410	HOSE, RED	1	SN:B10001--
17	08210-01207	· SPIRAL TUBE	1	SN:B10001--
18	419-V88-3420	HOSE, BLUE	1	SN:B10001--
19	08210-01206	· SPIRAL TUBE	1	SN:B10001--
20	419-V88-3430	HOSE, YELLOW	1	SN:B10001--
21	08210-01207	· SPIRAL TUBE	1	SN:B10001--
22	419-V88-3440	HOSE, ORANGE	1	SN:B10001--
23	08210-01206	· SPIRAL TUBE	1	SN:B10001--
24	419-V88-3450	HOSE, BROWN	1	SN:B10001--
25	08210-01206	· SPIRAL TUBE	1	SN:B10001--
26	419-V88-3460	HOSE, BLUE-YELLOW	1	SN:B10001--
27	08210-01206	· SPIRAL TUBE	1	SN:B10001--
28	419-V88-3470	HOSE, BLUE-ORANGE	1	SN:B10001--
29	08210-01206	· SPIRAL TUBE	1	SN:B10001--
30	419-V88-3480	HOSE, RED-GREEN	1	SN:B10001--
31	08210-01206	· SPIRAL TUBE	1	SN:B10001--

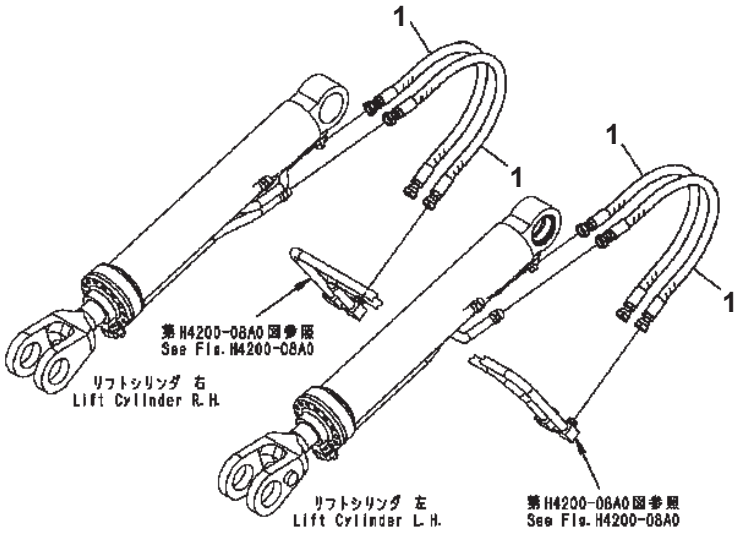

HYDRAULIC PIPING (LIFT CYLINDER HOSE)

Item	Part No.	Description	Qty	Options
1	02753-00610	HOSE	4	SN:B10001--

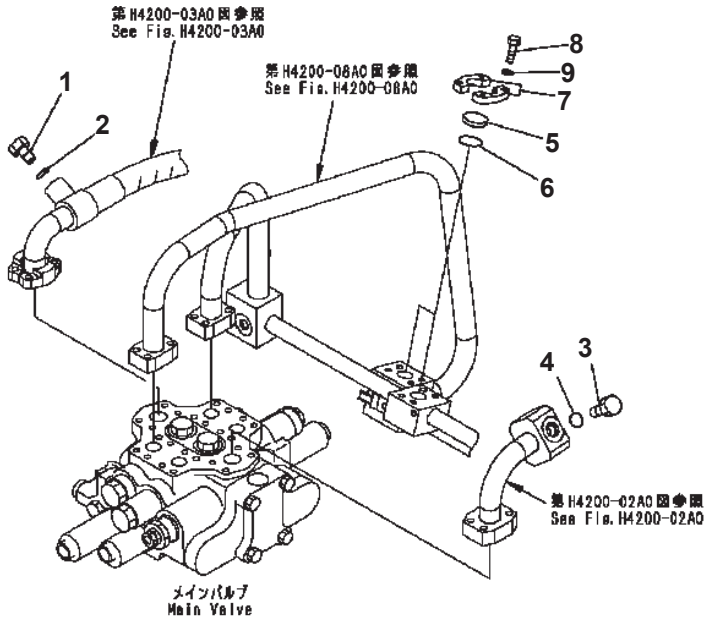

HYDRAULIC PIPING (PLUG)

Item	Part No.	Description	Qty	Options
1	07040-12012	PLUG	1	SN:B10001--
2	07002-12034	O-RING	1	SN:B10001--
3	07040-12412	PLUG	1	SN:B10001--
4	07002-12434	O-RING	1	SN:B10001--
5	07378-11000	HEAD	2	SN:B10001--
6	07000-13032	O-RING	2	SN:B10001--
7	07371-31049	FLANGE {SPLIT}	4	SN:B10001--
8	07372-21035	BOLT	8	SN:B10001--
9	01643-51032	WASHER	8	SN:B10001--

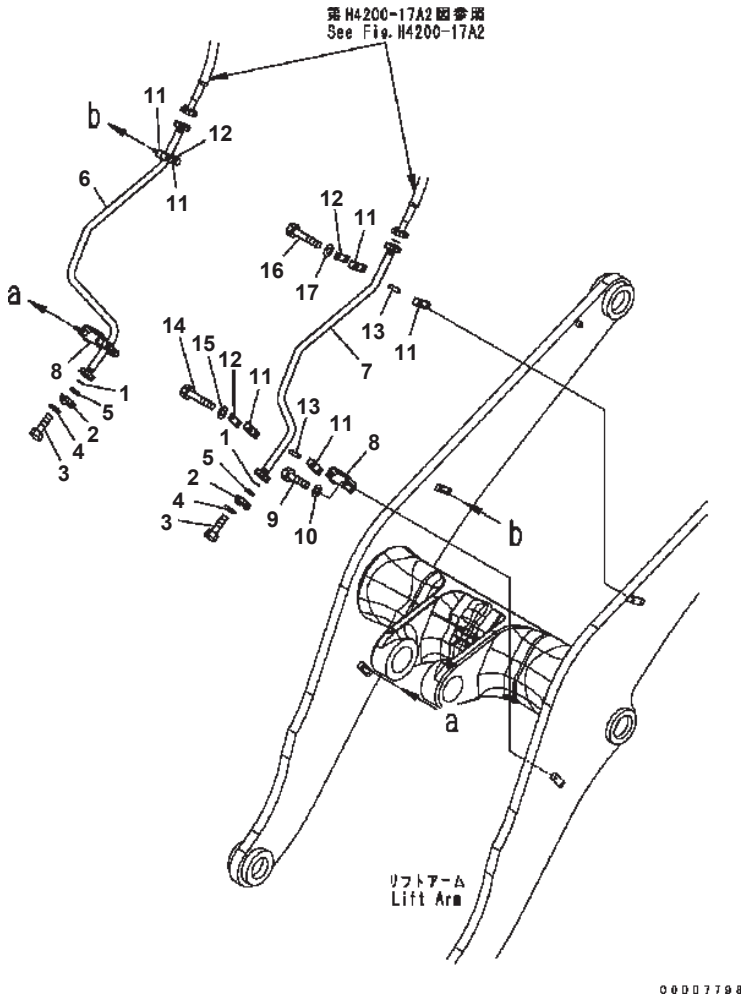

HYDRAULIC PIPING (BOOM PIPING) (FOR 3-SPOOL VALVE)

Item	Part No.	Description	Qty	Options
1	07000-13025	O-RING	2	SN:B10001--
2	07371-30638	FLANGE {SPLIT}	4	SN:B10001--
3	01010-80835	BOLT	8	SN:B10001--
4	01643-50823	WASHER	8	SN:B10001--
5	07378-10600	HEAD	2	SN:B10001--
6	419-877-3430	TUBE {R.H.}	1	SN:B10001--
7	419-877-3420	TUBE {L.H.}	1	SN:B10001--
8	418-878-1310	BRACKET	2	SN:B10001--
9	01010-81020	BOLT	4	SN:B10001--
10	01643-31032	WASHER	4	SN:B10001--
11	419-877-1371	CLAMP	8	SN:B10001--
12	419-877-1380	PLATE	4	SN:B10001--
13	419-877-1390	SPACER	8	SN:B10001--
14	01010-81075	BOLT	4	SN:B10001--
15	01643-31032	WASHER	4	SN:B10001--
16	01010-81070	BOLT	4	SN:B10001--
17	01643-31032	WASHER	4	SN:B10001--

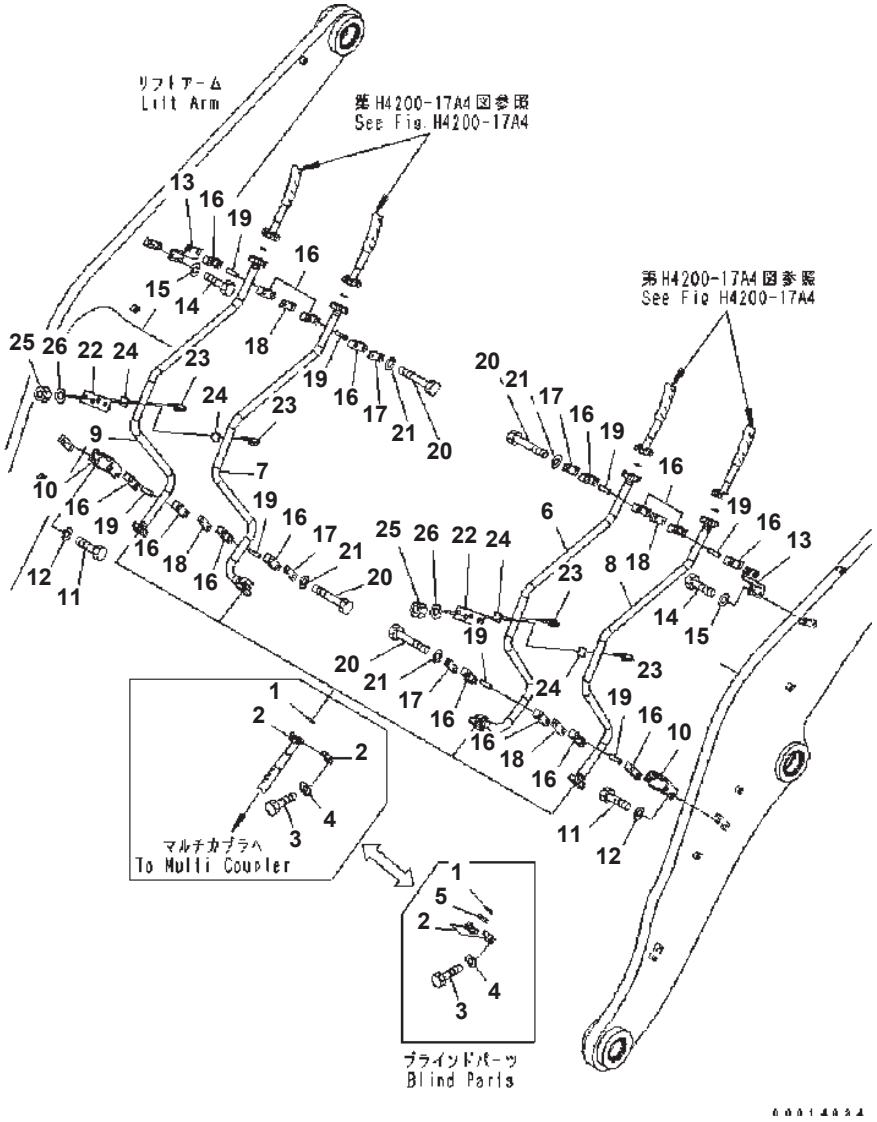

HYDRAULIC PIPING (BOOM PIPING) (4-SPOOL VALVE)

Item	Part No.	Description	Qty	Options
1	07000-13025	O-RING	4	SN:B10001--
2	07371-30638	FLANGE, SPLIT	8	SN:B10001--
3	01010-80835	BOLT	16	SN:B10001--
4	01643-50823	WASHER	16	SN:B10001--
5	07378-10600	HEAD	4	SN:B10001--
6	419-V88-3250	TUBE, L.H.	1	SN:B10001--
7	419-V88-3260	TUBE, R.H.	1	SN:B10001--
8	419-V88-3280	TUBE, L.H.	1	SN:B10001--
9	419-V88-3290	TUBE, R.H.	1	SN:B10001--
10	418-878-1310	BRACKET	2	SN:B10001--
11	01010-81020	BOLT	4	SN:B10001--
12	01643-31032	WASHER	4	SN:B10001--
13	423-V88-2690	BRACKET	2	SN:B10001--
14	01010-81020	BOLT	4	SN:B10001--
15	01643-31032	WASHER	4	SN:B10001--
16	419-877-1371	CLAMP	16	SN:B10001--
17	419-877-1380	PLATE	4	SN:B10001--
18	418-878-1290	PLATE	4	SN:B10001--
19	419-877-1390	SPACER	16	SN:B10001--
20	01011-81030	BOLT	8	SN:B10001--
21	01643-31032	WASHER	8	SN:B10001--
22	419-878-1150	PLATE	2	SN:B10001--
23	07283-32746	CLIP	4	SN:B10001--
24	07283-52737	SEAT	4	SN:B10001--
25	01597-01009	NUT	8	SN:B10001--
26	01643-31032	WASHER	8	SN:B10001--

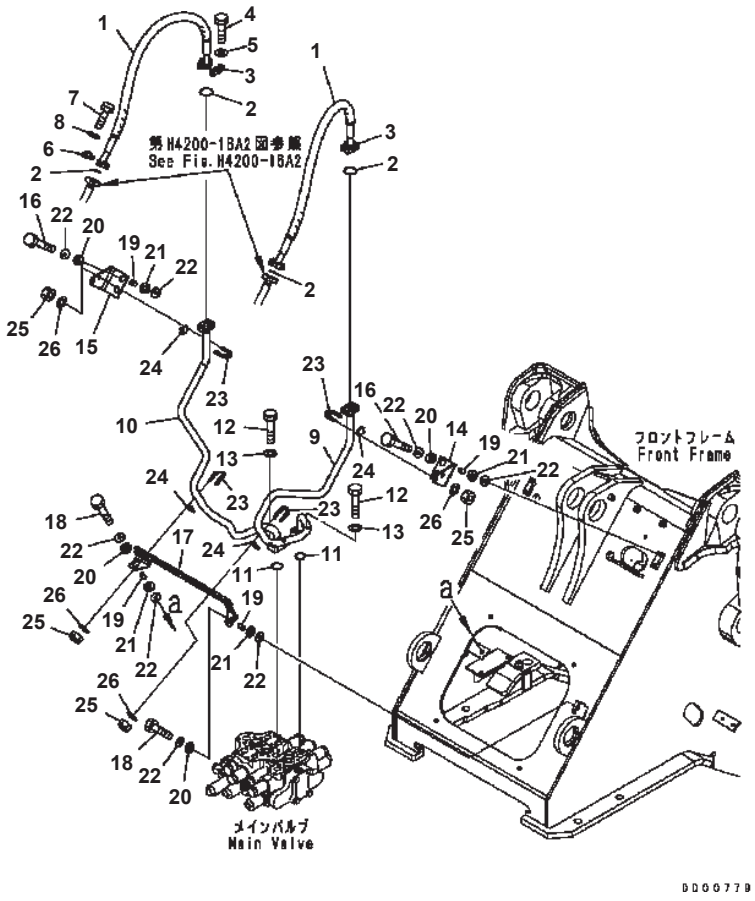

HYDRAULIC PIPING (HOSE) (FOR 3-SPOOL VALVE)

Item	Part No.	Description	Qty	Options
1	07125-00611	HOSE	2	SN:B10001--
2	07000-13025	O-RING	4	SN:B10001--
3	07371-30640	FLANGE {SPLIT}	4	SN:B10001--
4	07372-21035	BOLT	8	SN:B10001--
5	01643-51032	WASHER	8	SN:B10001--
6	07371-30638	FLANGE {SPLIT}	4	SN:B10001--
7	01010-80830	BOLT	8	SN:B10001--
8	01643-50823	WASHER	8	SN:B10001--
9	419-877-3321	TUBE {L.H.}	1	SN:B10001--
10	419-877-3332	TUBE {R.H.}	1	SN:B10021--
	419-877-3331	TUBE {R.H.}	1	SN:B10001--B10020
11	07000-13032	O-RING	2	SN:B10001--
12	07372-21040	BOLT	8	SN:B10001--
13	01643-51032	WASHER	8	SN:B10001--
14	419-877-3340	PLATE {L.H.}	1	SN:B10001--
15	419-877-3350	PLATE {R.H.}	1	SN:B10001--
16	01010-81045	BOLT	4	SN:B10001--
17	423-877-2210	BRACKET	1	SN:B10001--
18	01010-81050	BOLT	2	SN:B10001--
19	417-54-13470	SPACER	6	SN:B10001--
20	419-43-17930	CUSHION	6	SN:B10001--
21	415-64-13130	CUSHION	6	SN:B10001--
22	415-64-13120	WASHER	12	SN:B10001--
23	07283-32746	CLIP	4	SN:B10001--
24	07283-52737	SEAT	4	SN:B10001--
25	01597-01009	NUT	8	SN:B10001--
26	01643-31032	WASHER	8	SN:B10001--

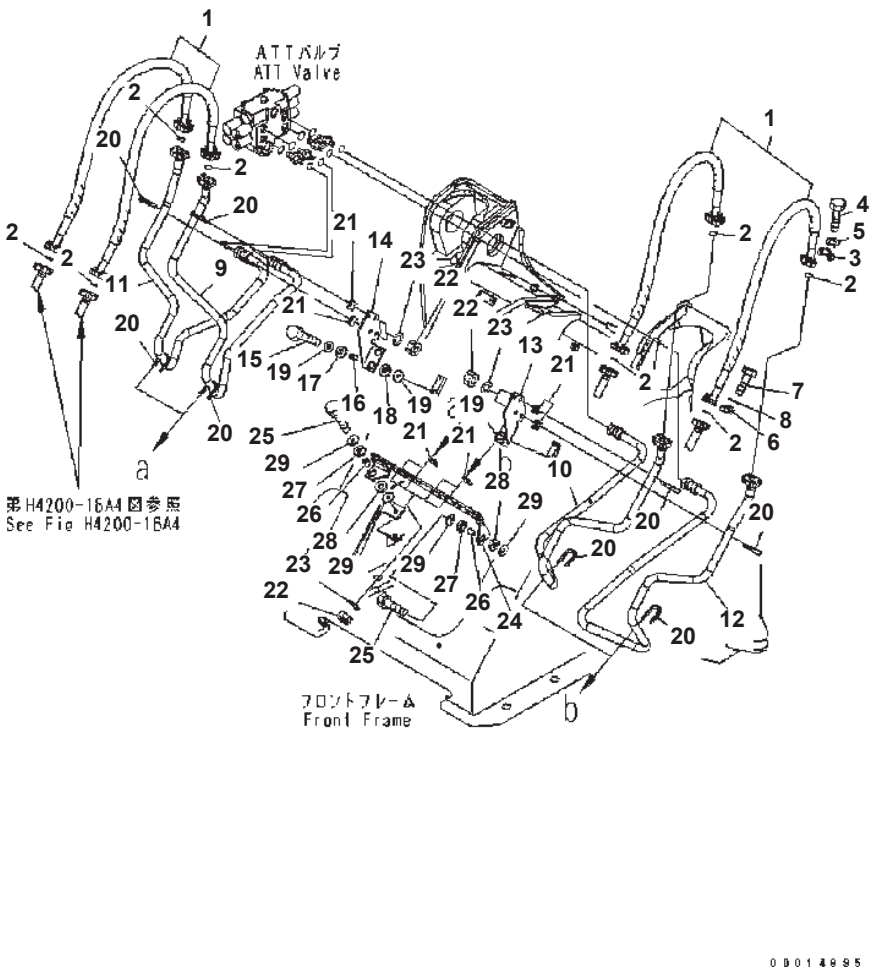

WA320-5 S/N B10001-UP

HYDRAULIC PIPING (HOSE) (4-SPOOL VALVE)

Item	Part No.	Description	Qty	Options
1	07125-00612	HOSE	4	SN:B10001--
2	07000-13025	O-RING	8	SN:B10001--
3	07371-30640	FLANGE {SPLIT}	8	SN:B10001--
4	07372-21035	BOLT	16	SN:B10001--
5	01643-51032	WASHER	16	SN:B10001--
6	07371-30638	FLANGE, SPLIT	8	SN:B10001--
7	01010-80830	BOLT	16	SN:B10001--
8	01643-50823	WASHER	16	SN:B10001--
9	419-V88-3110	TUBE, R.H.	1	SN:B10001--
10	418-V88-3120	TUBE, L.H.	1	SN:B10001--
11	419-V88-3130	TUBE, R.H.	1	SN:B10001--
12	419-V88-3140	TUBE, L.H.	1	SN:B10001--
13	419-V88-3310	PLATE, L.H.	1	SN:B10001--
14	419-V88-3320	PLATE, R.H.	1	SN:B10001--
15	01010-81045	BOLT	4	SN:B10001--
16	417-54-13470	SPACER	4	SN:B10001--
17	419-43-17930	CUSHION	4	SN:B10001--
18	415-64-13130	CUSHION	4	SN:B10001--
19	415-64-13120	WASHER	8	SN:B10001--
20	07283-32746	CLIP	8	SN:B10001--
21	07283-52737	SEAT	8	SN:B10001--
22	01597-01009	NUT	16	SN:B10001--
23	01643-31032	WASHER	16	SN:B10001--
24	423-877-2210	BRACKET	1	SN:B10001--
25	01010-81050	BOLT	2	SN:B10001--
26	417-54-13470	SPACER	2	SN:B10001--
27	419-43-17930	CUSHION	2	SN:B10001--
28	415-64-13130	CUSHION	2	SN:B10001--
29	415-64-13120	WASHER	4	SN:B10001--

Ref. H4200-17A4 Page 180370

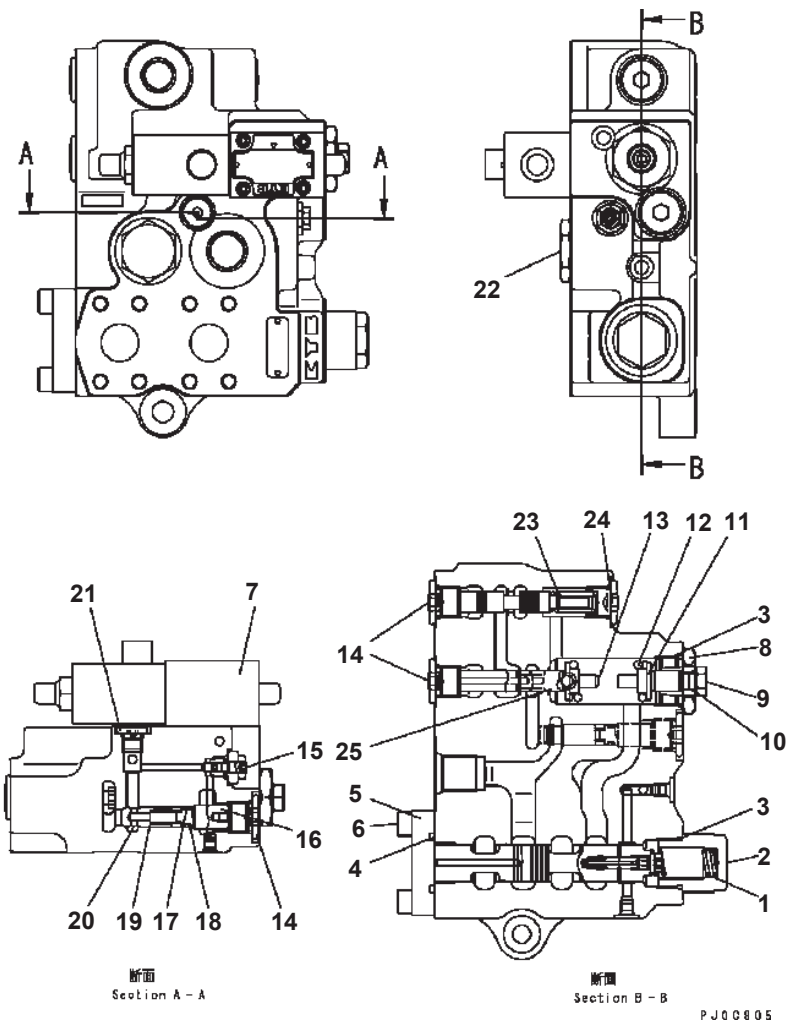

E.C.S.S. VALVE (INNER PARTS)

Item	Part No.	Description	Qty	Options
	421-S99-3450	VALVE ASS'Y	1	SN:B10001--
1	421-S99-3210	· SPRING	1	SN:B10001--
2	421-S99-3220	· PLUG	1	SN:B10001--
3	421-S99-3230	· O-RING	2	SN:B10001--
4	421-S99-3240	· O-RING	1	SN:B10001--
5	421-S99-3260	· CAP	1	SN:B10001--
6	421-S99-3270	· SOCKET HEAD BOLT	4	SN:B10001--
7	421-S99-3281	· SOLENOID VALVE	1	SN:B10001--
8	421-S99-3290	· PLUG	1	SN:B10001--
9	421-S99-3310	· ADJUST KIT	1	SN:B10001--
10	421-S99-3320	· O-RING	1	SN:B10001--
11	421-S99-3330	· PLUNGER	1	SN:B10001--
12	421-S99-3340	· SPRING	1	SN:B10001--
13	421-S99-3350	· SPRING SEAT ASS'Y	1	SN:B10001--
14	421-S99-3360	· PLUG ASS'Y	2	SN:B10001--
15	421-S99-3370	· VALVE ASS'Y	1	SN:B10001--
16	421-S99-3380	· SPACER	1	SN:B10001--
17	07000-B2010	· O-RING	1	SN:B10001--
18	421-S99-3390	· BACK-UP RING	1	SN:B10001--
19	421-S99-3410	· SPRING	1	SN:B10001--
20	421-S99-3420	· POPPET	1	SN:B10001--
21	421-S99-3430	· PLUG ASS'Y	2	SN:B10001--
22	421-S99-3440	· PLUG ASS'Y	1	SN:B10001--
23	421-S99-3560	· SPRING	1	SN:B10001--
24	421-S99-3570	· PLUG ASS'Y	1	SN:B10001--
25	☆	· SPOOL	1	SN:B10001--

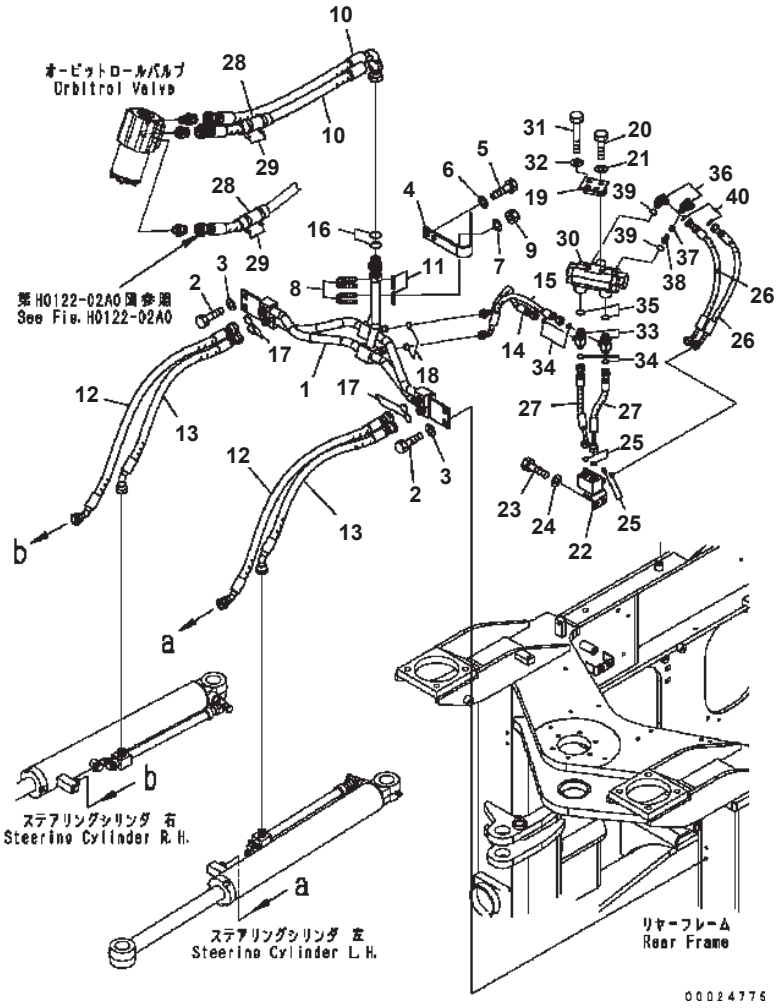

STEERING LINE

Item	Part No.	Description	Qty	Options
1	419-62-31224	TUBE	1	SN:B10001--
2	01010-81025	BOLT	4	SN:B10001--
3	01643-31032	WASHER	4	SN:B10001--
4	419-62-31463	BRACKET	1	SN:B10001--
5	01010-81030	BOLT	2	SN:B10001--
6	01643-31032	WASHER	2	SN:B10001--
7	01643-31032	WASHER	4	SN:B10001--
8	07283-32236	CLIP	2	SN:B10001--
9	01597-01009	NUT	4	SN:B10001--
10	419-62-33971	HOSE	2	SN:B10001--
11	07283-52232	SEAT	2	SN:B10001--
12	419-62-33891	HOSE	2	SN:B10001--
13	419-62-31610	HOSE	2	SN:B10001--
14	419-62-34450	HOSE	1	SN:B10001--
15	419-62-33960	HOSE	1	SN:B10001--
16	07002-13034	O-RING	2	SN:B10001--
17	02896-11012	O-RING	4	SN:B10001--
18	02896-11008	O-RING	2	SN:B10001--
19	419-64-35151	BRACKET	1	SN:B10001--
20	01010-81025	BOLT	2	SN:B10001--
21	01643-31032	WASHER	2	SN:B10001--
22	419-62-B1590	BLOCK	1	SN:B10046--
	419-62-31590	BLOCK	1	SN:B10001--B10045
23	01010-81020	BOLT	2	SN:B10001--
24	01643-31032	WASHER	2	SN:B10001--
25	02896-11008	O-RING	4	SN:B10001--
26	419-62-34460	HOSE	2	SN:B10001--
27	419-62-34471	HOSE	2	SN:B10001--
28	424-06-31290	CUSHION	2	SN:B10001--
29	08034-20834	BAND	4	SN:B10001--
30	(419-64-35600)	VALVE ASS'Y {CUSHION}	1	SN:B10001--
31	01010-80845	BOLT	2	SN:B10001--
32	01643-30823	WASHER	2	SN:B10001--
33	419-62-34481	TEE	2	SN:B10001--
34	02896-11008	O-RING	4	SN:B10001--
35	07000-12014	O-RING	2	SN:B10001--
	419-62-31581	VALVE ASS'Y	2	SN:B10001--
36	419-62-31571	・ ELBOW	1	SN:B10001--
37	20U-60-22310	・ POPPET	1	SN:B10001--
38	21Y-62-11591	・ PLUG	1	SN:B10001--

WA320-5 S/N B10001-UP

STEERING LINE

Item	Part No.	Description	Qty	Options
39	07000-12011	O-RING	2	SN:B10001--
40	02896-11008	O-RING	2	SN:B10001--

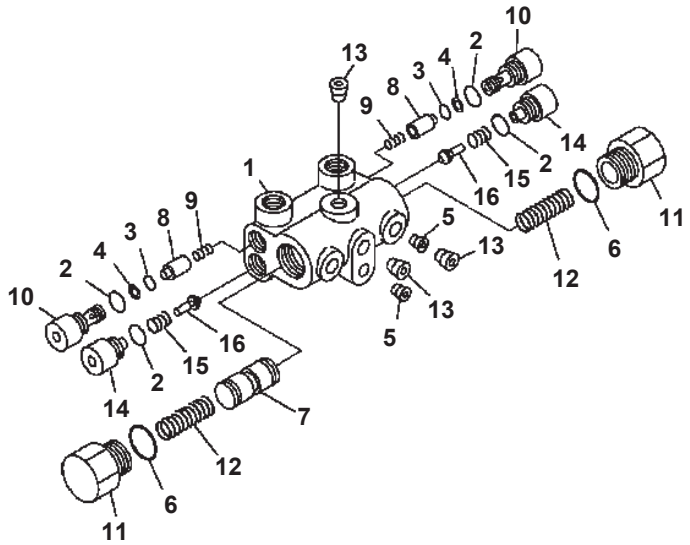

00007801

STEERING LINE (CUSHION VALVE)

Item	Part No.	Description	Qty	Options
1	419-64-35600	VALVE ASS'Y	1	SN:B10001--
2	☆	· O-RING (KIT)	4	SN:B10001--
3	☆	· O-RING (KIT)	2	SN:B10001--
4	☆	· O-RING (KIT)	2	SN:B10001--
5	☆	· ORIFICE	2	SN:B10001--
6	☆	· O-RING (KIT)	2	SN:B10001--
7	☆	· SPOOL	1	SN:B10001--
8	418-64-15830	· POPPET	2	SN:B10001--
9	418-64-15840	· SPRING	2	SN:B10001--
10	418-64-15850	· VALVE	2	SN:B10001--
11	418-64-15870	· PLUG	2	SN:B10001--
12	418-64-15880	· SPRING	2	SN:B10001--
13	418-64-15910	· PLUG	3	SN:B10001--
14	418-64-15920	· PLUG	2	SN:B10001--
15	418-64-15930	· SPRING	2	SN:B10001--
16	418-64-15940	· POPPET	2	SN:B10001--
		SERVICE KIT		
K	418-64-15810	SEAL KIT {CUSHION VALVE}	1	SN:B10001--

MAIN FRAME AND ITS RELATED PARTS

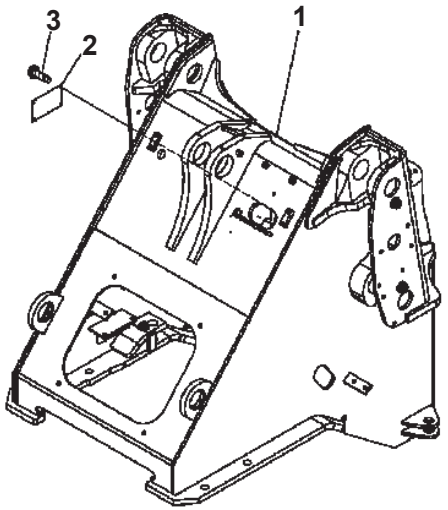

00012345

FRONT FRAME (FOR 3-SPOOL VALVE)

Item	Part No.	Description	Qty	Options
1	419-877-3311	FRAME	1	SN:B10001--
2	(★09602-12051)	PLATE¤ NAME	1	SN:B10001--
3	04418-13060	SCREW	4	SN:B10001--

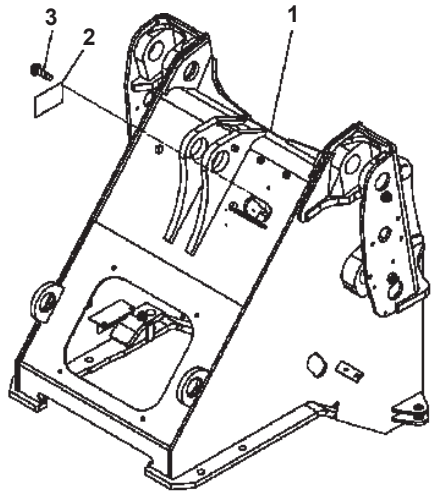

DDG12343

FRONT FRAME (FOR 3-SPOOL VALVE) (WITH PLUG)

Item	Part No.	Description	Qty	Options
1	419-46-31200	FRAME	1	SN:B10001--
2	(★09602-12051)	PLATE¤ NAME	1	SN:B10001--
3	04418-13060	SCREW	4	SN:B10001--

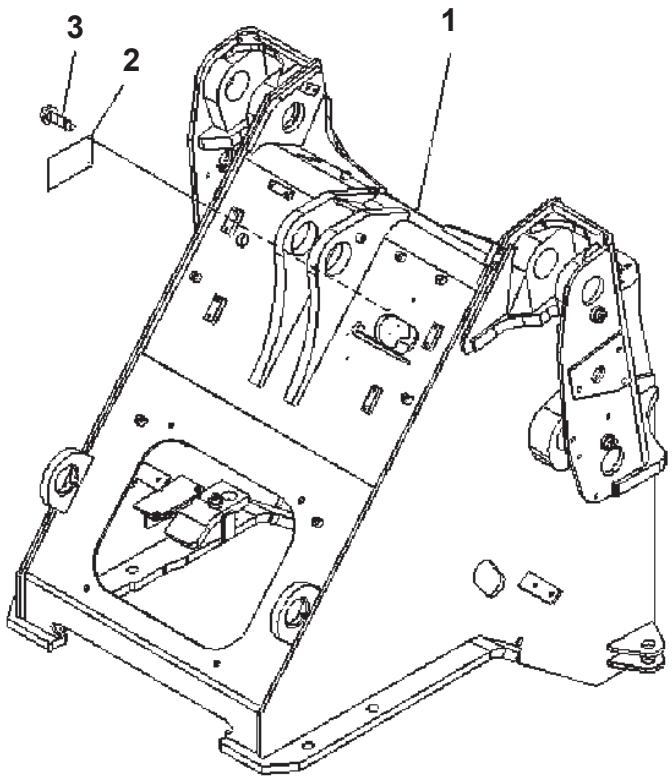

00014838

FRONT FRAME (FOR E.C.S.S.) (4-SPOOL VALVE)

Item	Part No.	Description	Qty	Options
1	419-V88-3620	FRAME	1	SN:B10001--
2	(★09602-12051)	PLATE¤ NAME	1	SN:B10001--
3	04418-13060	SCREW	4	SN:B10001--

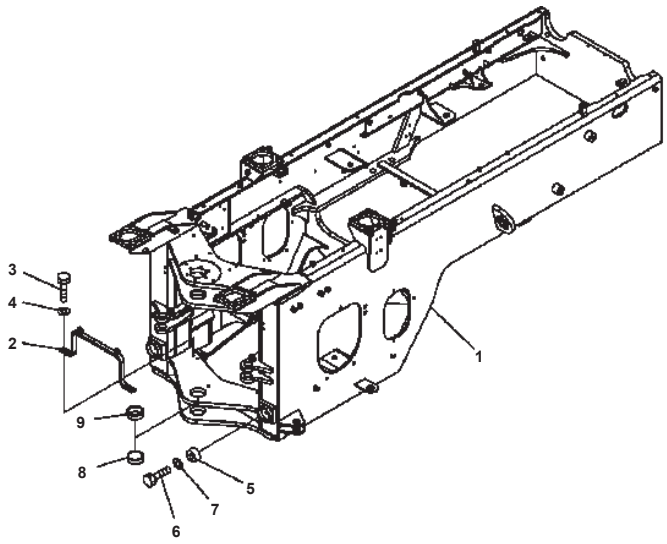

00007807

REAR FRAME (FOR ADDITIONAL COUNTER WEIGHT)

Item	Part No.	Description	Qty	Options
1	419-46-B1021	FRAME ASS'Y {REAR}	1	SN:B10579--
	□419-46-B1100	FRAME ASS'Y {REAR}	1	SN:B10314--B10578
	□419-975-3213	FRAME ASS'Y {REAR}	1	SN:B10201--B10313
	419-975-3212	FRAME ASS'Y {REAR}	1	SN:B10001--B10200
2	419-46-32311	PLATE	1	SN:B10001--
3	01010-81030	BOLT	4	SN:B10001--
4	01643-31032	WASHER	4	SN:B10001--
5	419-46-32321	BUMPER	2	SN:B10001--
6	01010-81225	BOLT	2	SN:B10001--
7	01643-31232	WASHER	2	SN:B10001--
8	419-46-42210	BUSHING	1	SN:B10345--
	419-46-32210	BUSHING	1	SN:B10001--B10344
9	419-46-42220	BUSHING	1	SN:B10345--
	419-46-32220	BUSHING	1	SN:B10001--B10344

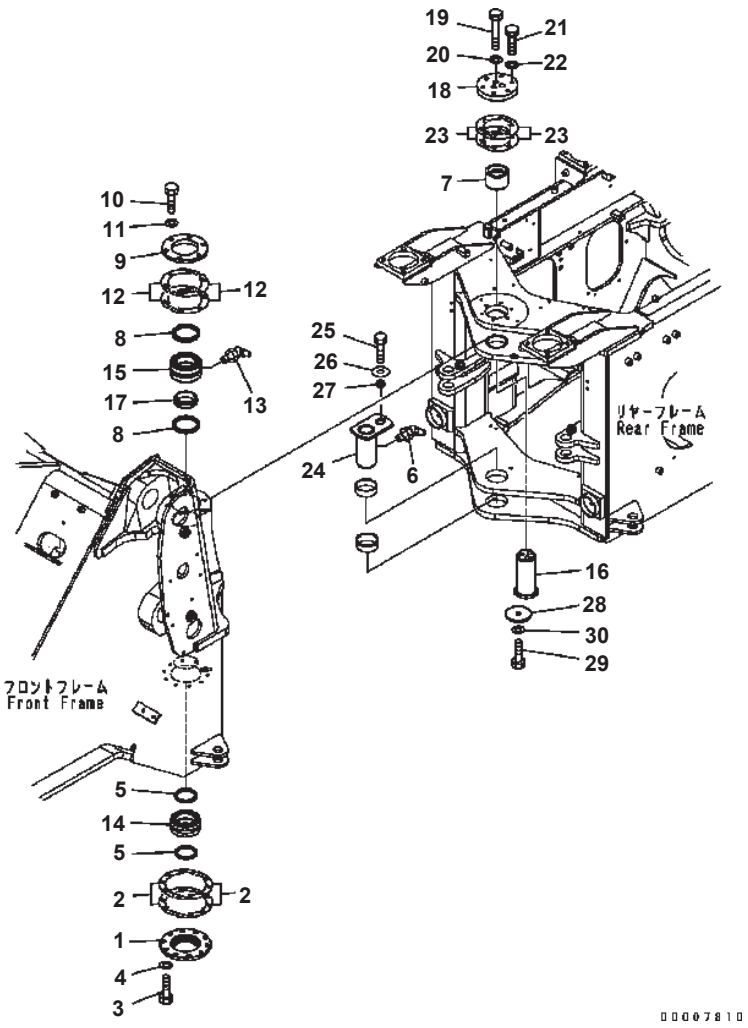

HINGE PIN

Item	Part No.	Description	Qty	Options
1	419-46-11350	RETAINER	1	SN:B10001--
2	421-46-11381	SHIM¤ 0.5MM	4	SN:B10001--
	421-46-11371	SHIM¤ 0.1MM	8	SN:B10001--
3	01010-81230	BOLT	10	SN:B10001--
4	01643-31232	WASHER	10	SN:B10001--
5	419-09-11110	SEAL	2	SN:B10001--
6	07020-00675	FITTING {GREASE}	1	SN:B10001--
7	419-46-11180	SPACER	1	SN:B10001--
8	419-46-11230	SEAL	2	SN:B10001--
9	419-46-11200	RETAINER	1	SN:B10001--
10	01010-81235	BOLT	6	SN:B10001--
11	01643-31232	WASHER	6	SN:B10001--
12	419-46-11250	SHIM¤ 0.1MM	8	SN:B10001--
	419-46-11260	SHIM¤ 0.5MM	2	SN:B10001--
	419-46-11270	SHIM¤ 1.0MM	4	SN:B10001--
13	07020-00675	FITTING {GREASE}	1	SN:B10001--
14	419-46-11360	BEARING	1	SN:B10001--
15	419-46-11281	BEARING	1	SN:B10001--
16	419-46-23210	SHAFT	1	SN:B10001--
17	419-46-11170	SPACER	1	SN:B10001--
18	419-46-33220	COVER	1	SN:B10001--
19	01010-61695	BOLT	3	SN:B10001--
20	01643-31645	WASHER	3	SN:B10001--
21	01010-81245	BOLT	6	SN:B10001--
22	01643-31232	WASHER	6	SN:B10001--
23	419-46-11211	SHIM¤ 0.1MM	8	SN:B10001--
	419-46-11221	SHIM¤ 0.5MM	6	SN:B10001--
24	419-46-11330	SHAFT	1	SN:B10001--
25	01010-81640	BOLT	1	SN:B10001--
26	421-70-11280	WASHER	1	SN:B10001--
27	419-46-11340	BUSHING	1	SN:B10001--
28	419-70-11340	PLATE	1	SN:B10001--
29	01010-81630	BOLT	1	SN:B10001--
30	01643-31645	WASHER	1	SN:B10001--

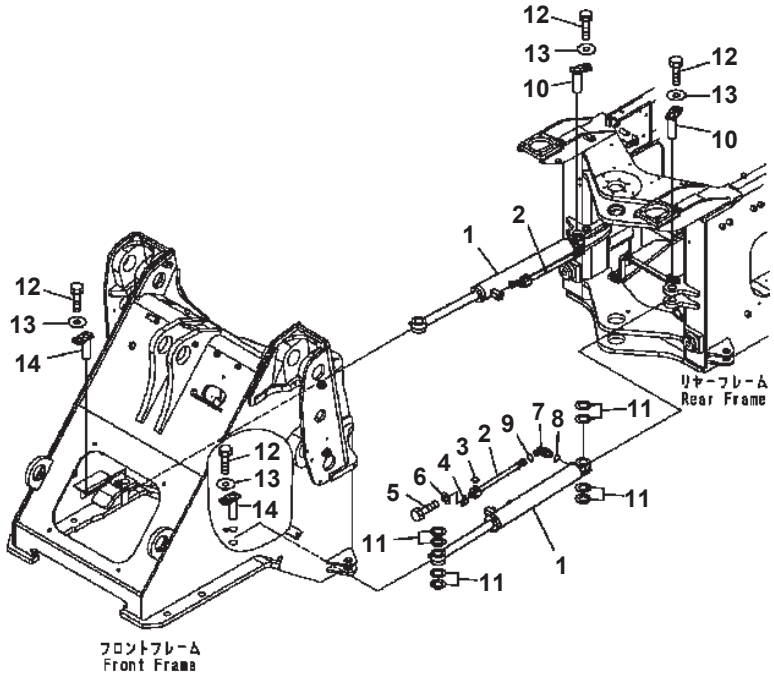

STEERING CYLINDER

Item	Part No.	Description	Qty	Options
1	(707-00-0Z680)	CYLINDER ASS'Y	2	SN:B10001--
2	418-46-34210	TUBE	2	SN:B10001--
3	02896-11012	O-RING	2	SN:B10001--
4	418-46-34220	PLATE	2	SN:B10001--
5	01010-81016	BOLT	4	SN:B10001--
6	01643-31032	WASHER	4	SN:B10001--
7	02782-10422	ELBOW	2	SN:B10001--
8	07002-12034	O-RING	2	SN:B10001--
9	02896-11012	O-RING	2	SN:B10001--
10	419-46-12260	PIN	2	SN:B10001--
11	419-46-12280	SHIM¤ 1.0MM	18	SN:B10001--
	419-46-12290	SHIM¤ 0.5MM	10	SN:B10001--
12	01010-81220	BOLT	4	SN:B10001--
13	175-54-34170	WASHER	4	SN:B10001--
14	419-46-32260	PIN	2	SN:B10001--

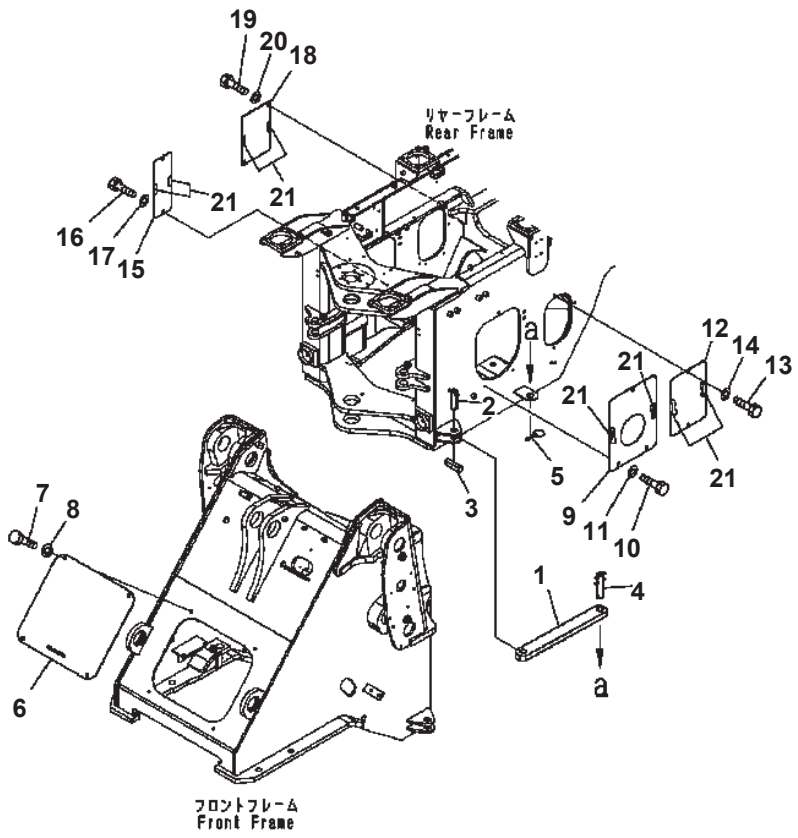

WA320-5 S/N B10001-UP

BAR LOCK AND COVER (FOR 3-SPOOL VALVE) (WITH PLUG)

Item	Part No.	Description	Qty	Options
1	421-46-12920	BAR	1	SN:B10001--
2	421-46-12721	PIN	1	SN:B10001--
3	04025-01065	PIN {SPRING}	1	SN:B10001--
4	421-46-12731	PIN	1	SN:B10001--
5	421-46-12740	PIN {LINCH}	1	SN:B10001--
6	419-46-24120	COVER	1	SN:B10001--
7	01010-81230	BOLT	4	SN:B10001--
8	01643-31232	WASHER	4	SN:B10001--
9	418-46-34413	COVER	1	SN:B10183--
	□418-46-34412	COVER	1	SN:B10001--B10182
10	01010-81225	BOLT	3	SN:B10001--
11	01643-31232	WASHER	3	SN:B10001--
12	418-46-34421	COVER	1	SN:B10183--
	□418-46-34420	COVER	1	SN:B10001--B10182
13	01010-81225	BOLT	2	SN:B10001--
14	01643-31232	WASHER	2	SN:B10001--
15	419-46-34420	COVER {R.H.}	1	SN:B10001--
16	01010-81225	BOLT	2	SN:B10001--
17	01643-31232	WASHER	2	SN:B10001--
18	419-46-34430	COVER {R.H.}	1	SN:B10001--
19	01010-81225	BOLT	2	SN:B10001--
20	01643-31232	WASHER	2	SN:B10001--
21	421-09-21420	SHEET	9	SN:B10001--

Ref. J4190-01A0 Page 210070

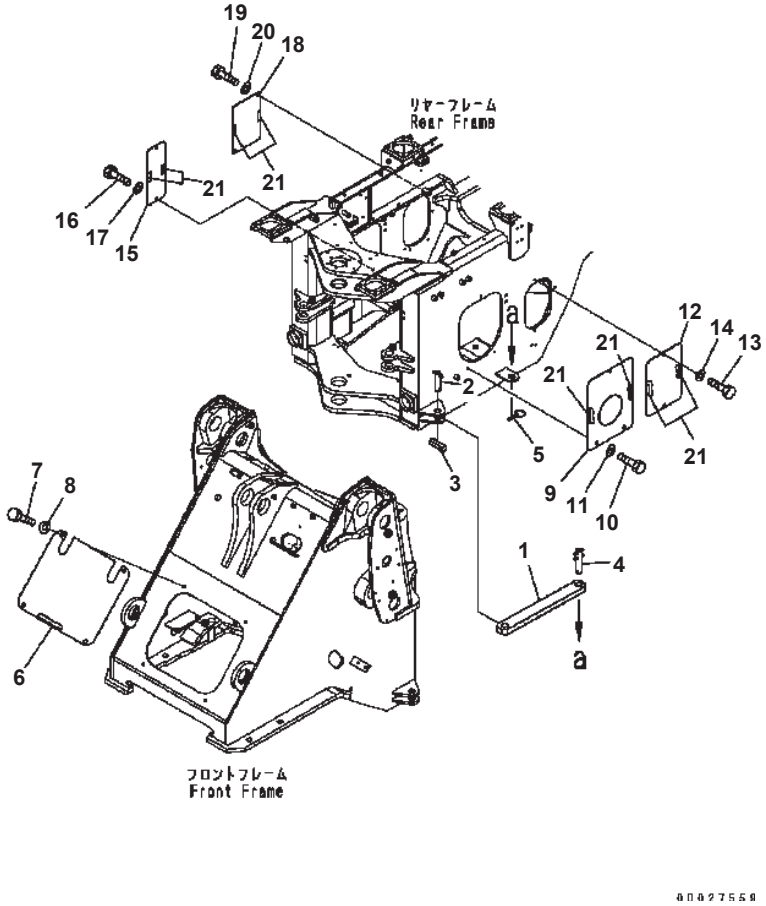

BAR LOCK AND COVER (FOR 3-SPOOL VALVE)

Item	Part No.	Description	Qty	Options
1	421-46-12920	BAR	1	SN:B10001--
2	421-46-12721	PIN	1	SN:B10001--
3	04025-01065	PIN {SPRING}	1	SN:B10001--
4	421-46-12731	PIN	1	SN:B10001--
5	421-46-12740	PIN {LINCH}	1	SN:B10001--
6	419-877-2220	COVER	1	SN:B10001--
7	01010-81225	BOLT	4	SN:B10001--
8	01643-31232	WASHER	4	SN:B10001--
9	418-46-34413	COVER	1	SN:B10183--
	□418-46-34412	COVER	1	SN:B10001--B10182
10	01010-81225	BOLT	3	SN:B10001--
11	01643-31232	WASHER	3	SN:B10001--
12	418-46-34421	COVER	1	SN:B10183--
	□418-46-34420	COVER	1	SN:B10001--B10182
13	01010-81225	BOLT	2	SN:B10001--
14	01643-31232	WASHER	2	SN:B10001--
15	419-46-34420	COVER {R.H.}	1	SN:B10001--
16	01010-81225	BOLT	2	SN:B10001--
17	01643-31232	WASHER	2	SN:B10001--
18	419-46-34430	COVER {R.H.}	1	SN:B10001--
19	01010-81225	BOLT	2	SN:B10001--
20	01643-31232	WASHER	2	SN:B10001--
21	421-09-21420	SHEET	9	SN:B10001--

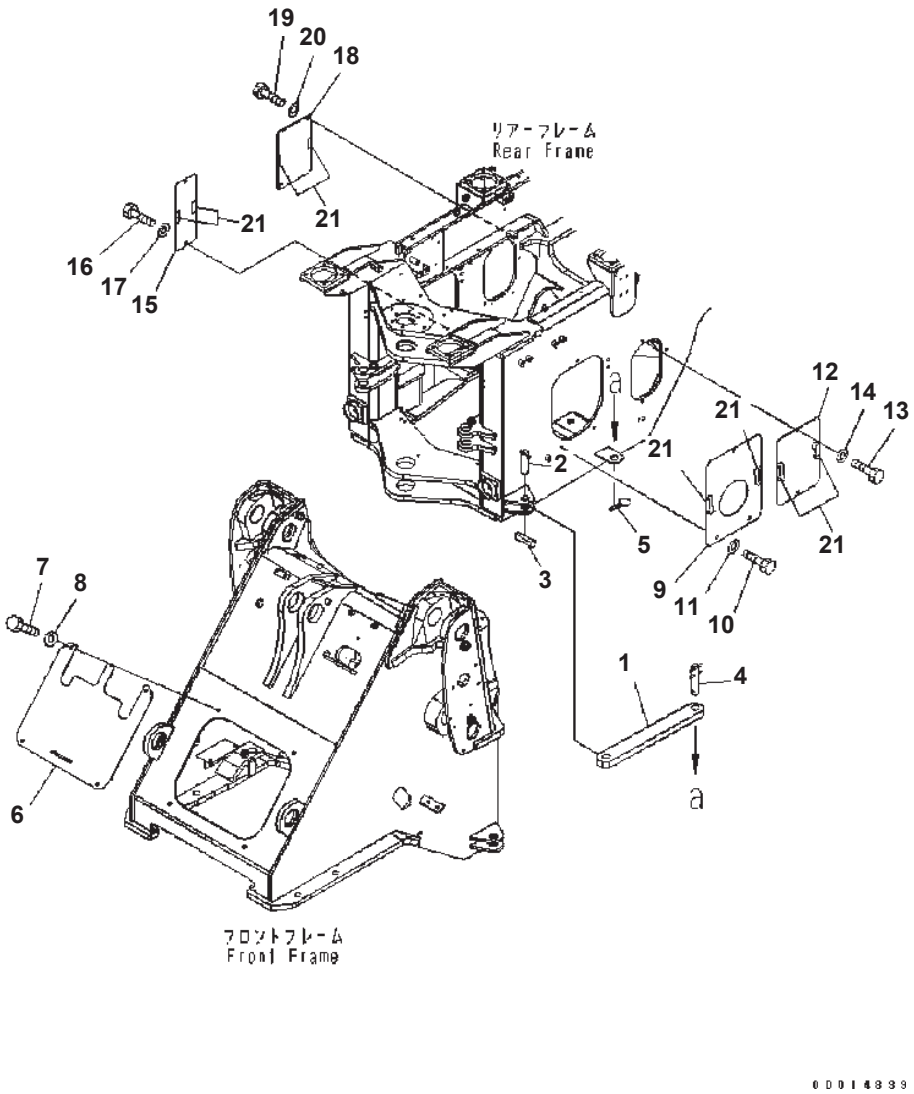

BAR LOCK AND COVER (4-SPOOL VALVE)

Item	Part No.	Description	Qty	Options
1	421-46-12920	BAR	1	SN:B10001--
2	421-46-12721	PIN	1	SN:B10001--
3	04025-01065	PIN, SPRING	1	SN:B10001--
4	421-46-12731	PIN	1	SN:B10001--
5	421-46-12740	PIN, LINCH	1	SN:B10001--
6	419-879-2210	COVER	1	SN:B10001--
7	01010-81225	BOLT	4	SN:B10001--
8	01643-31232	WASHER	4	SN:B10001--
9	418-46-34413	COVER	1	SN:B10001--
10	01010-81225	BOLT	3	SN:B10001--
11	01643-31232	WASHER	3	SN:B10001--
12	418-46-34421	COVER	1	SN:B10001--
13	01010-81225	BOLT	2	SN:B10001--
14	01643-31232	WASHER	2	SN:B10001--
15	419-46-34420	COVER, R.H.	1	SN:B10001--
16	01010-81225	BOLT	2	SN:B10001--
17	01643-31232	WASHER	2	SN:B10001--
18	419-46-34431	COVER, R.H.	1	SN:B10001--
19	01010-81225	BOLT	2	SN:B10001--
20	01643-31232	WASHER	2	SN:B10001--
21	421-09-21420	SHEET	9	SN:B10001--

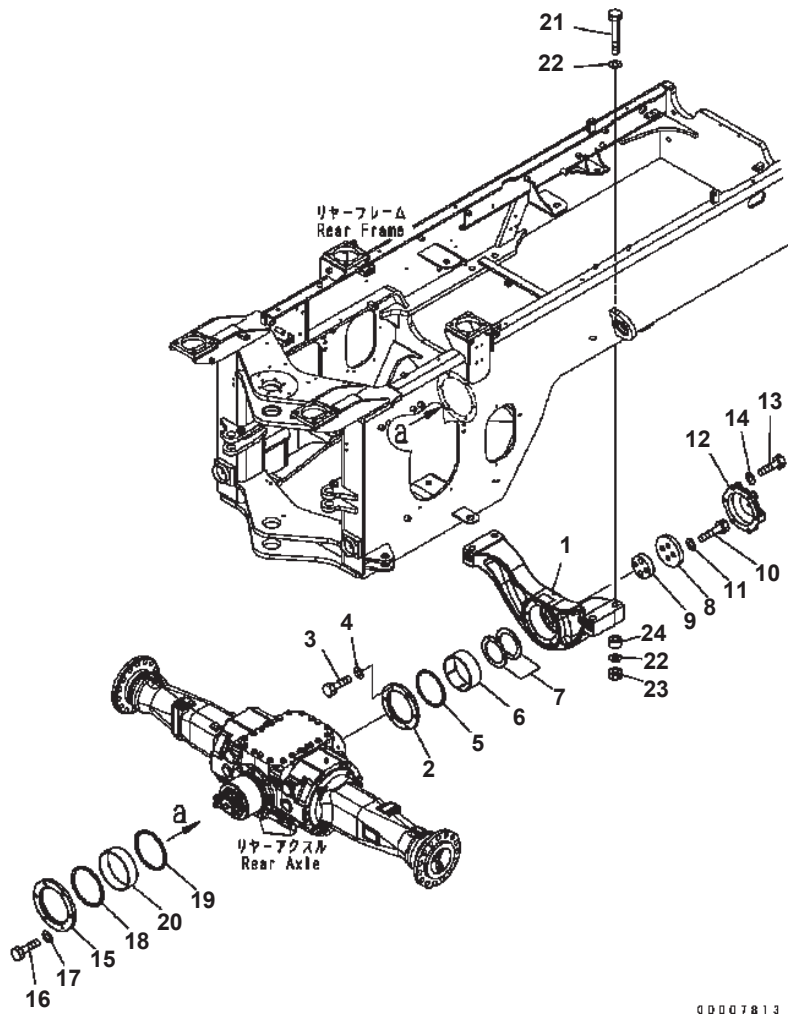

REAR AXLE SUPPORT

Item	Part No.	Description	Qty	Options
1	419-46-37111	SUPPORT	1	SN:B10001--
2	423-46-27180	RETAINER	1	SN:B10001--
3	01010-81235	BOLT	6	SN:B10001--
4	01643-31232	WASHER	6	SN:B10001--
5	421-46-15132	PACKING	1	SN:B10001--
6	424-46-12172	BUSHING	1	SN:B10001--
7	423-46-27120	WASHER	2	SN:B10001--
8	423-46-27140	PLATE	1	SN:B10001--
9	423-46-27130	PLATE	1	SN:B10001--
10	01010-62090	BOLT	4	SN:B10001--
11	01643-32060	WASHER	4	SN:B10001--
12	423-46-27150	COVER	1	SN:B10001--
13	01010-81260	BOLT	6	SN:B10001--
14	01643-31232	WASHER	6	SN:B10001--
15	423-46-27170	RETAINER	1	SN:B10001--
16	01010-81235	BOLT	6	SN:B10001--
17	01643-31232	WASHER	6	SN:B10001--
18	419-46-12480	PACKING	1	SN:B10001--
19	423-46-27190	SEAL	1	SN:B10001--
20	423-46-27220	BUSHING	1	SN:B10001--
21	01011-62785	BOLT	4	SN:B10001--
22	01643-32780	WASHER	8	SN:B10001--
23	01580-02722	NUT	4	SN:B10001--
24	419-46-37120	SPACER	4	SN:B10001--

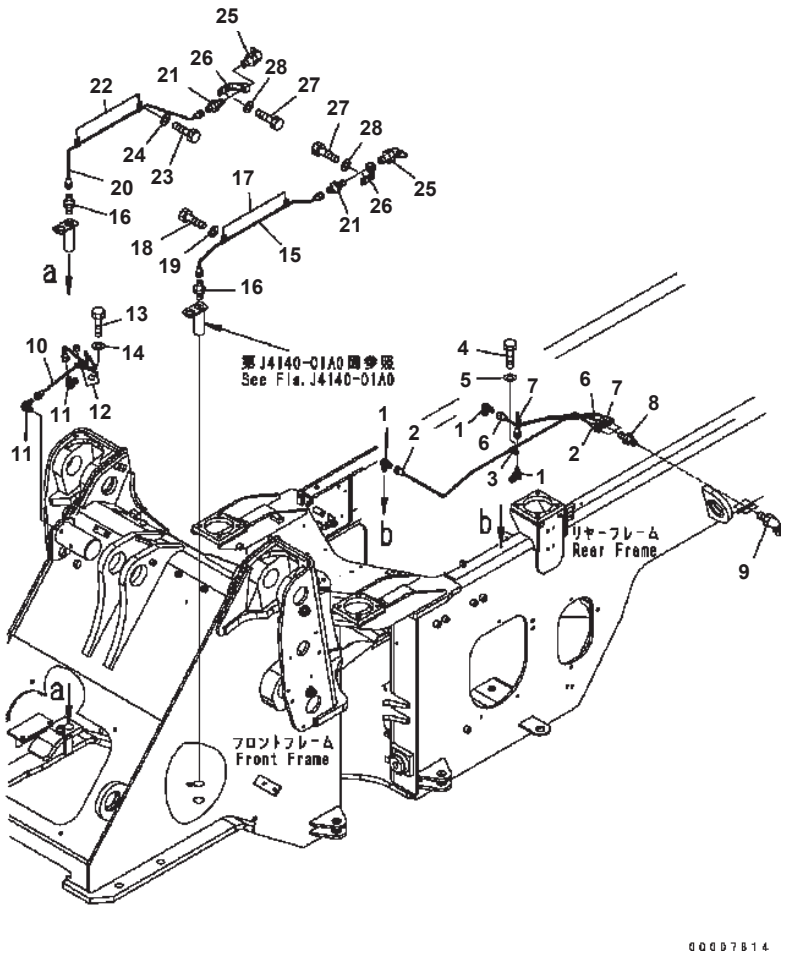

REMOTE GREASE (STEERING CYLINDER)

Item	Part No.	Description	Qty	Options
1	07217-70510	ELBOW	3	SN:B10001--
2	419-46-36210	TUBE	1	SN:B10001--
3	04434-50510	CLIP	1	SN:B10001--
4	01010-81016	BOLT	1	SN:B10001--
5	01643-31032	WASHER	1	SN:B10001--
6	419-46-36220	TUBE	1	SN:B10001--
7	419-46-36231	TUBE	1	SN:B10001--
8	07214-80510	CONNECTOR	3	SN:B10369--
	□07214-70510	CONNECTOR	3	SN:B10001--B10368
9	07020-00675	FITTING {GREASE}	3	SN:B10001--
10	419-46-36242	TUBE	1	SN:B10001--
11	07217-70510	ELBOW	2	SN:B10001--
12	04434-50510	CLIP	2	SN:B10001--
13	01010-81020	BOLT	2	SN:B10001--
14	01643-31032	WASHER	2	SN:B10001--
15	419-46-36252	TUBE	1	SN:B10001--
16	07214-80510	CONNECTOR	2	SN:B10369--
	□07214-70510	CONNECTOR	2	SN:B10001--B10368
17	04434-50510	CLIP	2	SN:B10001--
18	01010-81020	BOLT	2	SN:B10001--
19	01643-31032	WASHER	2	SN:B10001--
20	419-46-36262	TUBE	1	SN:B10001--
21	07214-80510	CONNECTOR	2	SN:B10369--
	□07214-70510	CONNECTOR	2	SN:B10001--B10368
22	04434-50510	CLIP	2	SN:B10001--
23	01010-81020	BOLT	2	SN:B10001--
24	01643-31032	WASHER	2	SN:B10001--
25	07020-00675	FITTING {GREASE}	3	SN:B10001--
26	419-46-36273	BLOCK	2	SN:B10001--
27	01010-81025	BOLT	4	SN:B10001--
28	01643-31032	WASHER	4	SN:B10001--

OPERATOR'S COMPARTMENT AND CONTROL SYSTEM

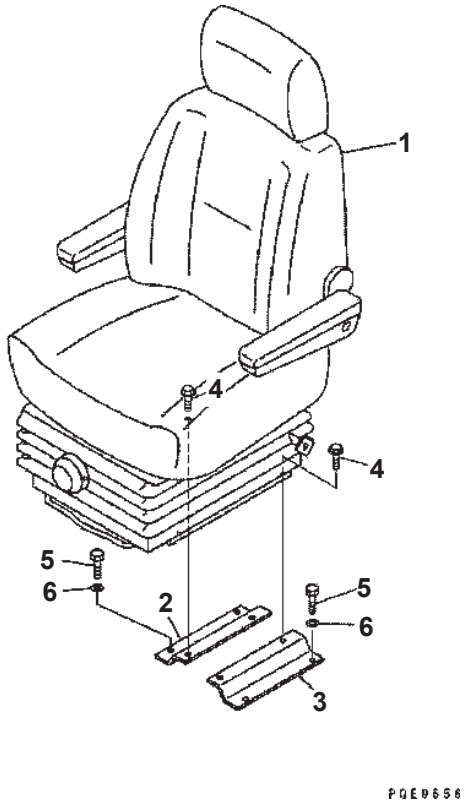

WA320-5 S/N B10001-UP

OPERATOR'S SEAT (SUSPENSION) (FABRIC TYPE)

Item	Part No.	Description	Qty	Options
1	418-57-B1220	SEAT ASS'Y	1	SN:B10001--
2	418-57-B1310	BRACKET	1	SN:B10001--
3	418-57-B1320	BRACKET	1	SN:B10001--
4	01252-80825	BOLT	4	SN:B10202--
	□01435-40820	BOLT	4	SN:B10001--B10201
5	01010-81230	BOLT	4	SN:B10001--
6	01643-31232	WASHER	4	SN:B10001--

Ref. K0110-01A7 Page 240010

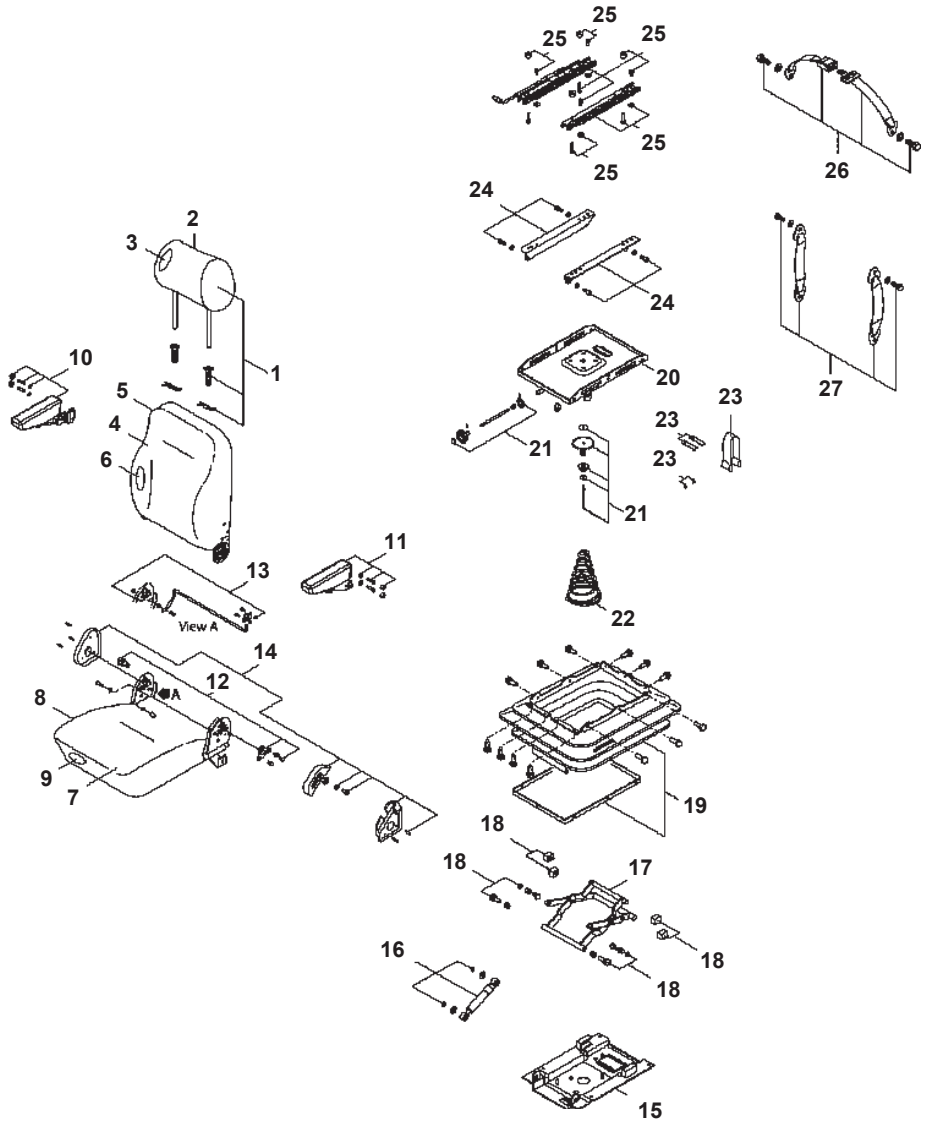

OPERATOR'S SEAT (SUSPENSION) (FABRIC TYPE) (INNER PARTS)

Item	Part No.	Description	Qty	Options
	418-57-B1220	OPERATOR'S SEAT (SUSPENSION) (FABRIC TYPE)	1	SN:B10001--
1	GJ18000412	· HEADREST ASS'Y	1	SN:B10001--
2	GJ18030495	· · HEADREST COVER ASS'Y	1	SN:B10001--
3	GJ18030250	· · HEADREST FOAM ASS'Y	1	SN:B10001--
4	GJ18000411	· BACKREST ASS'Y	1	SN:B10001--
5	GJ18030494	· · BACKREST COVER ASS'Y	1	SN:B10001--
6	GJ18260394	· · BACKREST FOAM ASS'Y	1	SN:B10001--
7	GJ18000410	· SEATREST ASS'Y	1	SN:B10001--
8	GJ18030493	· · SEATREST COVER ASS'Y	1	SN:B10001--
9	GJ18030515	· · SEATREST FOAM ASS'Y	1	SN:B10001--
10	GJ19400160	· ARMREST R.H	1	SN:B10001--
11	GJ19400159	· ARMREST L.H	1	SN:B10001--
12	GJ18240070	· BACKREST FIXING ASS'Y	1	SN:B10001--
13	GJ18210033	· BACKREST SPRING ASS'Y	1	SN:B10001--
14	GJ18180415	· BACKREST FINISHING ASS'Y	1	SN:B10001--
	GJ19016420	· SUSPENSION ASS'Y	1	SN:B10001--
15	★	· · SUSPENSION BRACKET	1	SN:B10001--
16	GJ18210031	· · DAMPER ASS'Y	1	SN:B10001--
17	GJ18240132	· · LEVER ASS'Y	1	SN:B10001--
18	GJ18240077	· · · LEVER SUB ASS'Y	1	SN:B10001--
19	GJ18030350	· · SUSPENSION COVER ASS'Y	1	SN:B10001--
20	★	· · SLIDER BRACKET	1	SN:B10001--
21	GJ18180434	· · WEIGHT ADJUSTER ASS'Y	1	SN:B10001--
22	GJ18210032	· · WEIGHT ADJUSTER SPRING	1	SN:B10001--
23	GJ18180446	· · SUSPENSION ADJUSTER BELT ASS'Y	1	SN:B10001--
24	GJ18150058	· · SLIDER BRACKET ASS'Y	1	SN:B10001--
25	GJ18240083	· · SLIDER ASS'Y	1	SN:B10001--
26	GJ18180311	· CONVENTIONAL SEAT BELT ASS'Y	1	SN:B10001--
27	GJ18260395	· SEAT BELT ANCHOR ASS'Y	1	SN:B10001--

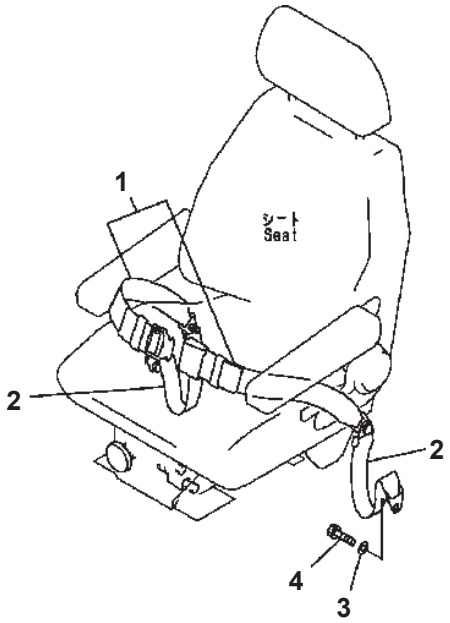

PWE3637

SEAT BELT (78 MM)

Item	Part No.	Description	Qty	Options
1	09409-10001	BELT¤ LAP	1	SN:B10001--
	09409-00001	・ BOLT	2	SN:B10001--
	01643-51232	・ WASHER	2	SN:B10001--
	09409-00003	・ NUT	2	SN:B10001--
2	09409-20000	BELT¤ TETHER	2	SN:B10001--
	09409-00001	・ BOLT	2	SN:B10001--
	01643-51232	・ WASHER	2	SN:B10001--
	09409-00003	・ NUT	2	SN:B10001--
3	416-40-11150	WASHER	1	SN:B10001--
4	02030-70719	BOLT	2	SN:B10001--

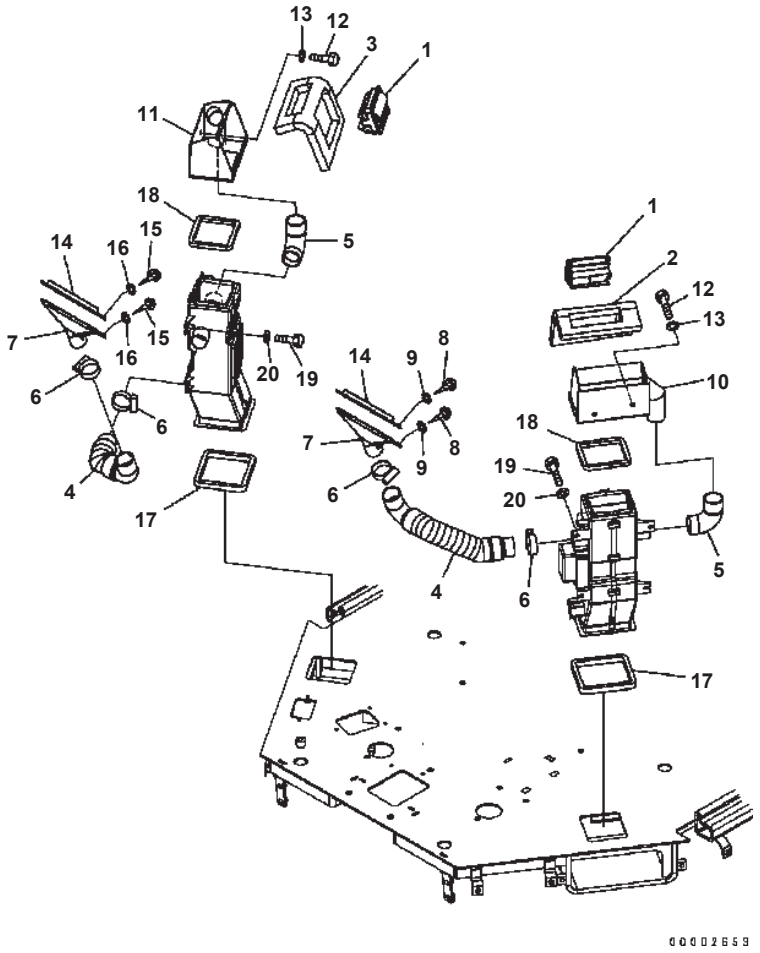

AIR CONDITIONER DUCT (FRONT DUCT)

Item	Part No.	Description	Qty	Options
1	201-979-7820	GRILLE	2	SN:B10001--
2	418-07-33630	SHEET {L.H.}	1	SN:B10001--
3	418-07-33640	SHEET {R.H.}	1	SN:B10001--
4	42C-07-13131	HOSE	2	SN:B10001--
5	418-07-29450	CONNECTOR	2	SN:B10001--
6	07289-00045	CLAMP	4	SN:B10001--
7	421-07-23990	NOZZLE	2	SN:B10001--
8	01370-00412	SCREW	4	SN:B10001--
9	01611-04045	WASHER	4	SN:B10001--
10	418-07-33810	DUCT {L.H.}	1	SN:B10001--
11	418-07-33820	DUCT {R.H.}	1	SN:B10001--
12	01010-80616	BOLT	4	SN:B10001--
13	01643-30623	WASHER	4	SN:B10001--
14	418-07-33130	PLATE	2	SN:B10001--
15	01370-00412	SCREW	4	SN:B10001--
16	01611-04045	WASHER	4	SN:B10001--
17	421-07-23810	SHEET	2	SN:B10001--
18	421-07-23820	SHEET	2	SN:B10001--
19	01010-80616	BOLT	8	SN:B10001--
20	01643-30623	WASHER	8	SN:B10001--

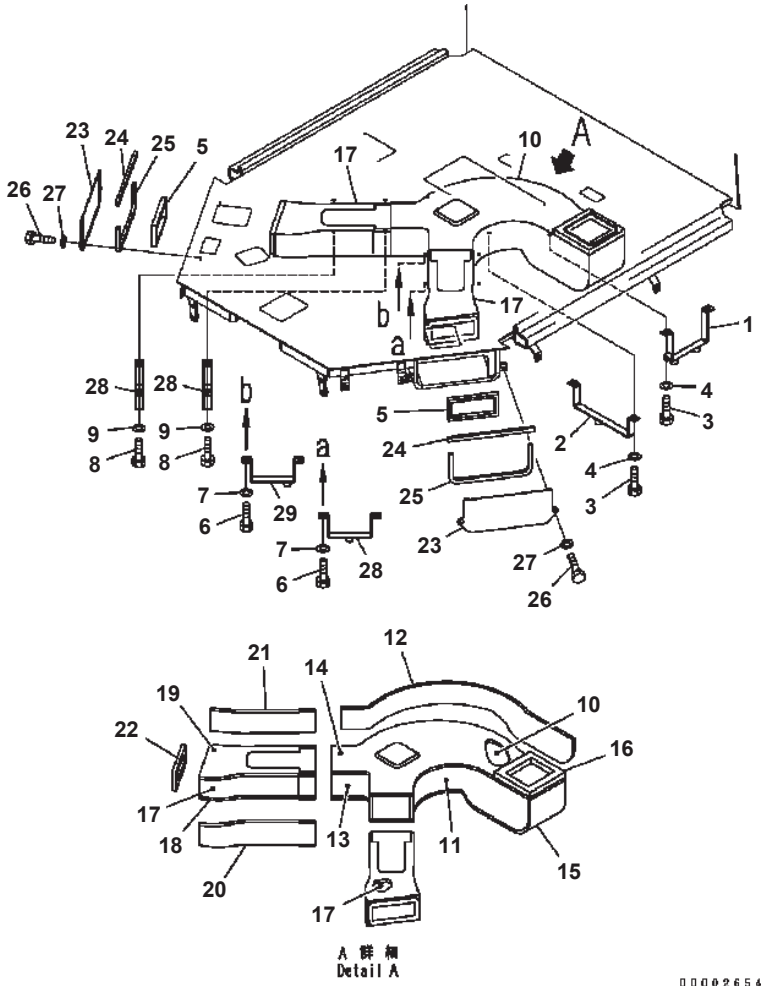

AIR CONDITIONER DUCT (FLOOR DUCT)

Item	Part No.	Description	Qty	Options
1	418-07-33611	CLAMP	1	SN:B10001--
2	421-07-23660	CLAMP	1	SN:B10001--
3	01010-81020	BOLT	4	SN:B10001--
4	01643-31032	WASHER	4	SN:B10001--
5	421-07-23751	SHEET	2	SN:B10001--
6	01010-81020	BOLT	4	SN:B10001--
7	01643-31032	WASHER	4	SN:B10001--
8	01010-81020	BOLT	4	SN:B10001--
9	01643-31032	WASHER	4	SN:B10001--
	421-07-23600	DUCT ASS'Y	1	SN:B10001--
10	☆	· DUCT	1	SN:B10001--
11	423-07-23110	· SHEET	1	SN:B10001--
12	423-07-23120	· SHEET	1	SN:B10001--
13	423-07-23130	· SHEET	1	SN:B10001--
14	423-07-23140	· SHEET	1	SN:B10001--
15	423-07-23150	· SHEET	1	SN:B10001--
16	421-07-23771	· SHEET	1	SN:B10001--
	421-07-23620	DUCT ASS'Y	2	SN:B10001--
17	☆	· DUCT	1	SN:B10001--
18	423-07-23160	· SHEET	1	SN:B10001--
19	423-07-23170	· SHEET	1	SN:B10001--
20	423-07-23180	· SHEET	1	SN:B10001--
21	423-07-23190	· SHEET	1	SN:B10001--
22	423-07-23211	· SHEET	1	SN:B10001--
	418-07-33710	PLATE ASS'Y	2	SN:B10001--
23	☆	· PLATE	1	SN:B10001--
24	418-07-33730	· FINISHER	1	SN:B10001--
25	418-07-33740	· SHEET	1	SN:B10001--
26	01010-81016	BOLT	4	SN:B10001--
27	01643-31032	WASHER	4	SN:B10001--
28	421-07-23680	CLAMP	3	SN:B10001--
29	418-07-33620	CLAMP	1	SN:B10001--

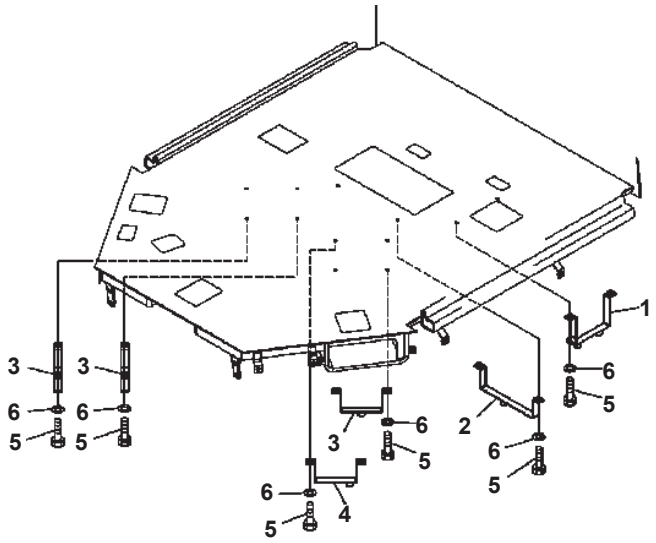

00002702

AIR CONDITIONER DUCT LESS

Item	Part No.	Description	Qty	Options
1	418-07-33611	CLAMP	1	SN:B10001--
2	421-07-23660	CLAMP	1	SN:B10001--
3	421-07-23680	CLAMP	3	SN:B10001--
4	418-07-33620	CLAMP	1	SN:B10001--
5	01010-81016	BOLT	12	SN:B10001--
6	01643-31032	WASHER	12	SN:B10001--

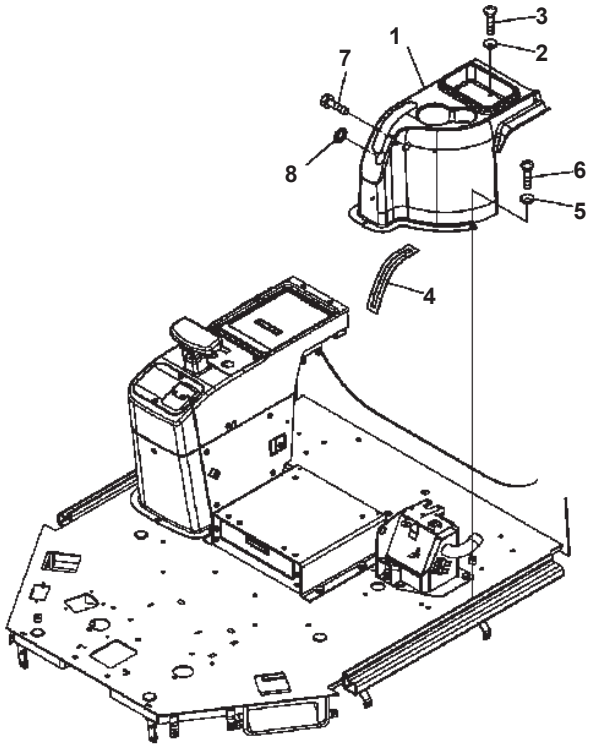

WA320-5 S/N B10001-UP

FLOOR (CONSOLE COVER) (L.H.) (FOR MECHA PARKING BRAKE)

Item	Part No.	Description	Qty	Options
1	418-54-32634	COVER	1	SN:B10001--
2	418-926-3490	WASHER	4	SN:B10001--
3	01225-70616	SCREW	4	SN:B10001--
4	418-54-32680	AWNING	2	SN:B10001--
5	418-926-3490	WASHER	3	SN:B10001--
6	01225-70616	SCREW	3	SN:B10001--
7	02030-70719	BOLT	1	SN:B10001--
8	14X-54-18150	CAP	1	SN:B10001--

Ref. K0210-03A5 Page 240070

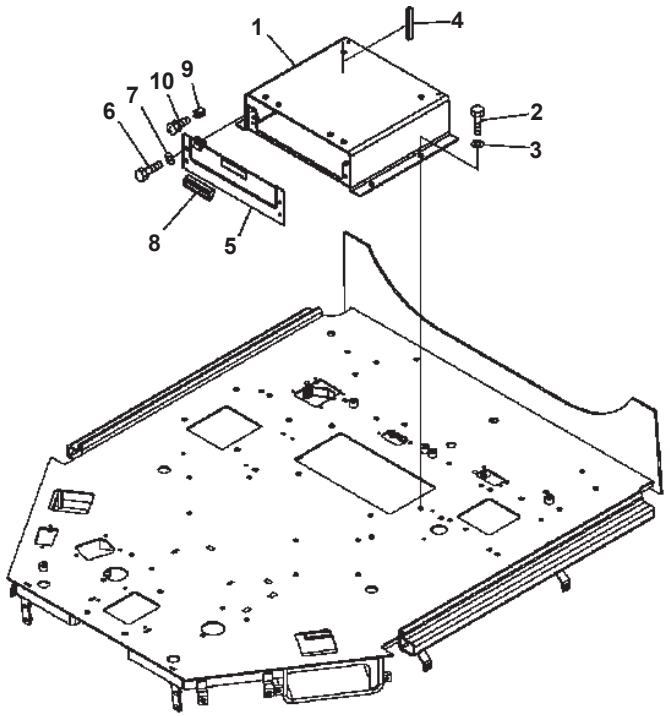

00002655

FLOOR (FLOOR)

Item	Part No.	Description	Qty	Options
1	418-54-32225	BRACKET ASS'Y	1	SN:B10229--
	□418-54-32224	BRACKET ASS'Y	1	SN:B10001--B10228
	418-54-32230	· SHEET	1	SN:B10001--
2	01010-81225	BOLT	4	SN:B10001--
3	01643-31232	WASHER	4	SN:B10001--
4	421-54-22520	FINISHER	1	SN:B10001--
5	418-54-32891	COVER	1	SN:B10001--
6	01010-D0616	BOLT	4	SN:B10001--
7	01643-70623	WASHER	4	SN:B10001--
8	421-54-22750	HANDLE	1	SN:B10001--
9	08052-01311	CLIP	1	SN:B10001--
10	01023-10612	SCREW	1	SN:B10001--

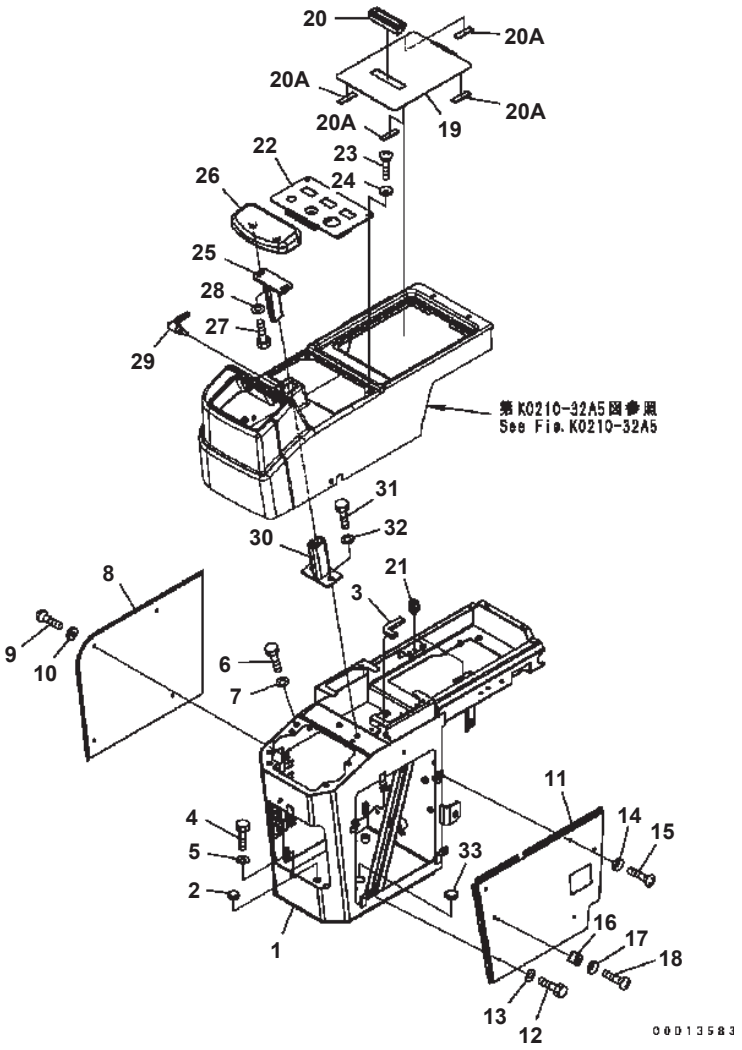

FLOOR (CONSOLE BOX) (R.H.) (2-LEVER) (#B10001-B10228)

Item	Part No.	Description	Qty	Options
1	418-54-33120	BOX	1	SN:B10001--B10228
2	09415-01008	CAP	4	SN:B10001--B10228
3	421-54-22520	FINISHER	1	SN:B10001--B10228
4	01010-81225	BOLT	4	SN:B10001--B10228
5	01643-31232	WASHER	4	SN:B10001--B10228
6	01010-81020	BOLT	2	SN:B10001--B10228
7	01643-31032	WASHER	2	SN:B10001--B10228
8	419-54-32672	PLATE	1	SN:B10001--B10228
9	01225-70616	SCREW	10	SN:B10001--B10228
10	418-926-3490	WASHER	10	SN:B10001--B10228
11	418-54-32424	PLATE	1	SN:B10001--B10228
12	01010-80616	BOLT	2	SN:B10001--B10228
13	01643-30623	WASHER	2	SN:B10001--B10228
14	418-926-3490	WASHER	2	SN:B10001--B10228
15	01225-70616	SCREW	2	SN:B10001--B10228
16	418-43-38311	PLATE	1	SN:B10001--B10228
17	418-926-3490	WASHER	2	SN:B10001--B10228
18	01225-70616	SCREW	2	SN:B10001--B10228
19	418-54-32774	COVER	1	SN:B10001--B10228
20	421-54-22750	HANDLE	1	SN:B10001--B10228
20A	421-09-12780	CUSHION	4	SN:B10001--B10228
21	23S-55-51530	CLIP	2	SN:B10001--B10228
22	418-54-33520	COVER	1	SN:B10001--B10228
23	01225-70616	SCREW	2	SN:B10001--B10228
24	418-926-3490	WASHER	2	SN:B10001--B10228
25	418-43-31241	BRACKET	1	SN:B10001--B10228
26	421-43-31520	REST	1	SN:B10001--B10228
27	01010-80616	BOLT	2	SN:B10001--B10228
28	01643-30623	WASHER	2	SN:B10001--B10228
29	421-43-31551	LEVER	1	SN:B10001--B10228
30	418-54-32241	BRACKET	1	SN:B10001--B10228
31	01010-81020	BOLT	2	SN:B10001--B10228
32	01643-31032	WASHER	2	SN:B10001--B10228
33	09415-01610	CAP	1	SN:B10001--B10228

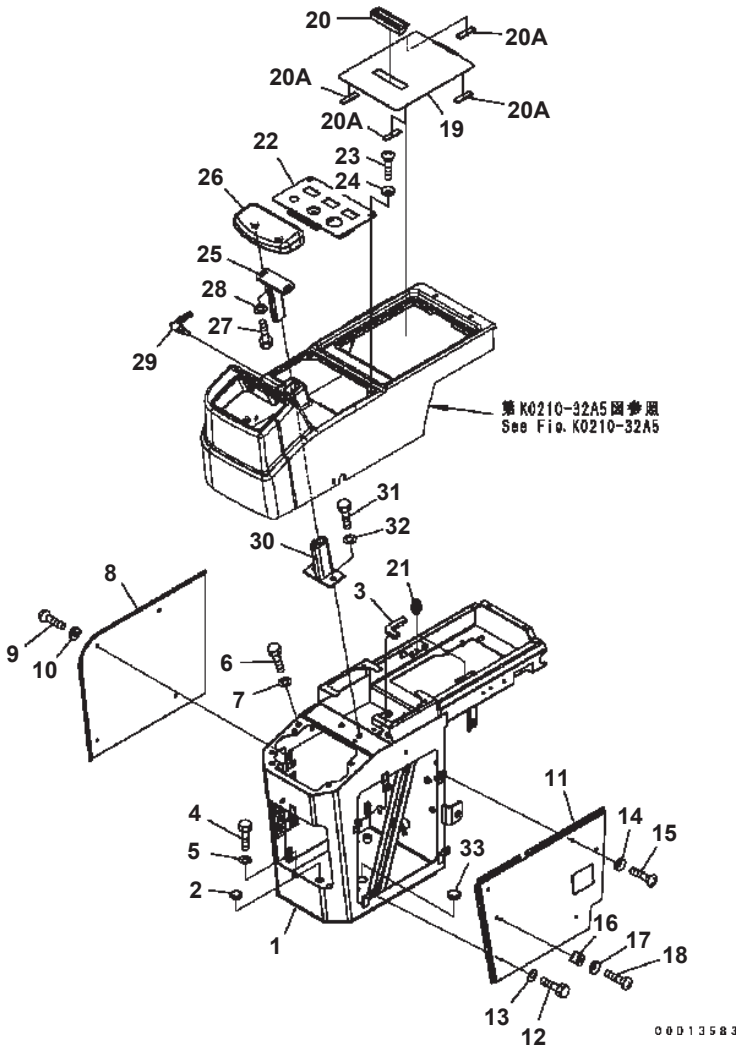

FLOOR (CONSOLE BOX) (R.H.) (3-LEVER) (#B10001-B10228)

Item	Part No.	Description	Qty	Options
1	418-877-3250	BOX	1	SN:B10001--B10228
2	09415-01008	CAP	4	SN:B10001--B10228
3	421-54-22520	FINISHER	1	SN:B10001--B10228
4	01010-81225	BOLT	4	SN:B10001--B10228
5	01643-31232	WASHER	4	SN:B10001--B10228
6	01010-81020	BOLT	2	SN:B10001--B10228
7	01643-31032	WASHER	2	SN:B10001--B10228
8	419-54-32672	PLATE	1	SN:B10001--B10228
9	01225-70616	SCREW	10	SN:B10001--B10228
10	418-926-3490	WASHER	10	SN:B10001--B10228
11	418-54-32424	PLATE	1	SN:B10001--B10228
12	01010-80616	BOLT	2	SN:B10001--B10228
13	01643-30623	WASHER	2	SN:B10001--B10228
14	418-926-3490	WASHER	2	SN:B10001--B10228
15	01225-70616	SCREW	2	SN:B10001--B10228
16	418-43-38311	PLATE	1	SN:B10001--B10228
17	418-926-3490	WASHER	2	SN:B10001--B10228
18	01225-70616	SCREW	2	SN:B10001--B10228
19	418-54-32774	COVER	1	SN:B10001--B10228
20	421-54-22750	HANDLE	1	SN:B10001--B10228
20A	421-09-12780	CUSHION	4	SN:B10001--B10228
21	23S-55-51530	CLIP	2	SN:B10001--B10228
22	418-54-33520	COVER	1	SN:B10001--B10228
23	01225-70616	SCREW	2	SN:B10001--B10228
24	418-926-3490	WASHER	2	SN:B10001--B10228
25	418-43-31241	BRACKET	1	SN:B10001--B10228
26	421-43-31520	REST	1	SN:B10001--B10228
27	01010-80616	BOLT	2	SN:B10001--B10228
28	01643-30623	WASHER	2	SN:B10001--B10228
29	421-43-31551	LEVER	1	SN:B10001--B10228
30	418-54-32241	BRACKET	1	SN:B10001--B10228
31	01010-81020	BOLT	2	SN:B10001--B10228
32	01643-31032	WASHER	2	SN:B10001--B10228
33	09415-01610	CAP	1	SN:B10001--B10228

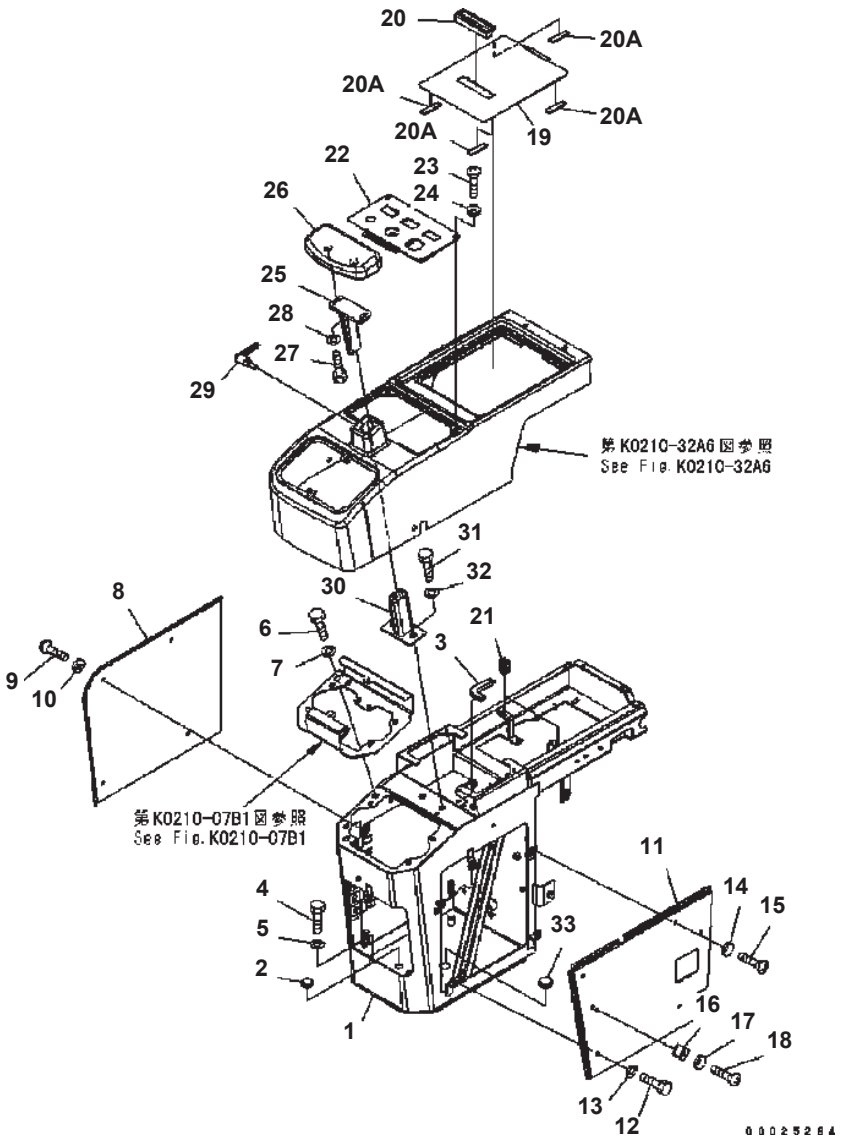

FLOOR (CONSOLE BOX) (R.H.) (#B10229-)

Item	Part No.	Description	Qty	Options
1	419-54-32626	BOX	1	SN:B10229--
2	09415-01008	CAP	4	SN:B10229--
3	421-54-22520	FINISHER	1	SN:B10229--
4	01010-81225	BOLT	4	SN:B10229--
5	01643-31232	WASHER	4	SN:B10229--
6	01010-81020	BOLT	2	SN:B10229--
7	01643-31032	WASHER	2	SN:B10229--
8	419-54-B5540	PLATE	1	SN:B10289--
	419-54-32672	PLATE	1	SN:B10229--B10288
9	01225-70616	SCREW	10	SN:B10229--
10	418-926-3490	WASHER	10	SN:B10229--
11	418-54-32424	PLATE	1	SN:B10229--
12	01010-80616	BOLT	2	SN:B10229--
13	01643-30623	WASHER	2	SN:B10229--
14	418-926-3490	WASHER	2	SN:B10229--
15	01225-70616	SCREW	2	SN:B10229--
16	418-43-38311	PLATE	1	SN:B10229--
17	418-926-3490	WASHER	2	SN:B10229--
18	01225-70616	SCREW	2	SN:B10229--
19	418-54-32891	COVER	1	SN:B10229--
20	421-54-22750	HANDLE	1	SN:B10229--
20A	421-09-12780	CUSHION	4	SN:B10229--
21	23S-55-51530	CLIP	2	SN:B10229--
22	418-54-33520	COVER	1	SN:B10229--
23	01225-70616	SCREW	2	SN:B10229--
24	418-926-3490	WASHER	2	SN:B10229--
25	418-43-31241	BRACKET	1	SN:B10229--
26	421-43-31520	REST	1	SN:B10229--
27	01010-80616	BOLT	2	SN:B10229--
28	01643-30623	WASHER	2	SN:B10229--
29	421-43-31551	LEVER	1	SN:B10229--
30	418-54-32241	BRACKET	1	SN:B10229--
31	01010-81020	BOLT	2	SN:B10229--
32	01643-31032	WASHER	2	SN:B10229--
33	09415-01610	CAP	1	SN:B10229--

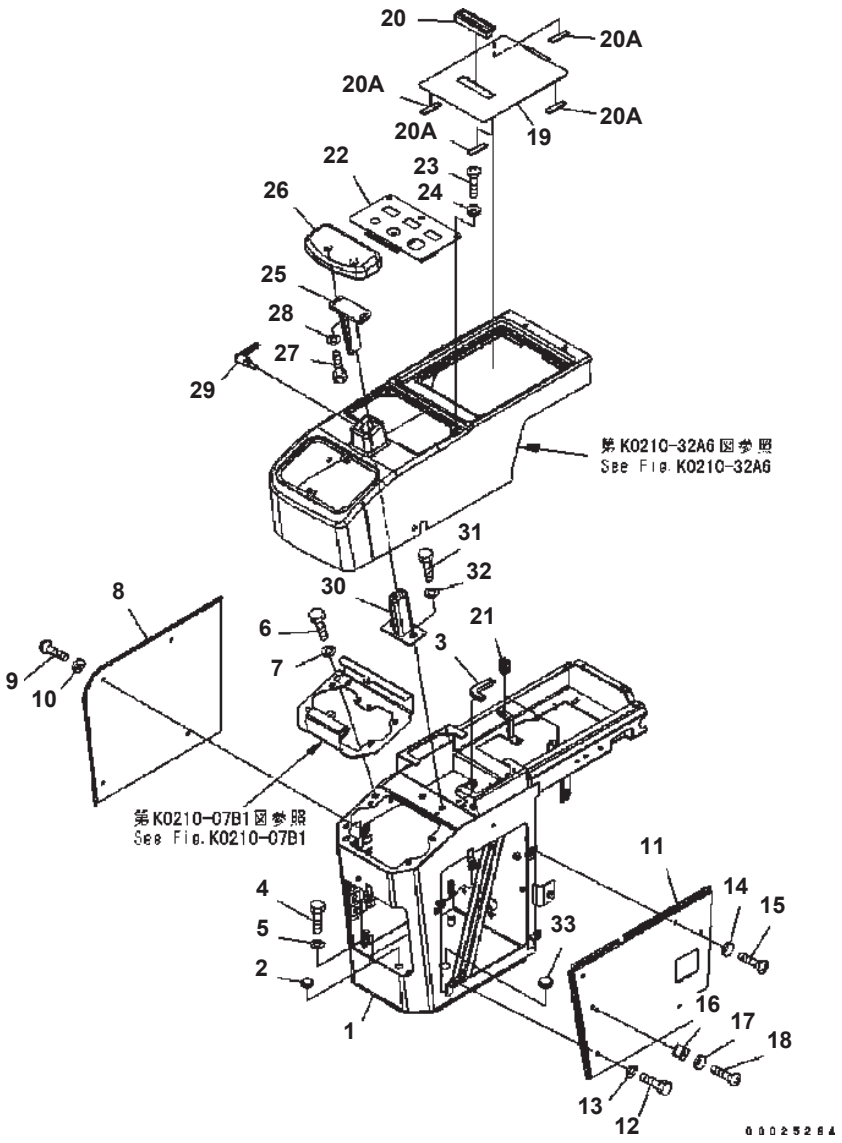

FLOOR (CONSOLE BOX) (R.H.) (FOR SUGAR CANE) (#B10186-)

Item	Part No.	Description	Qty	Options
1	419-54-32626	BOX	1	SN:B10186--
2	09415-01008	CAP	4	SN:B10186--
3	421-54-22520	FINISHER	1	SN:B10186--
4	01010-81225	BOLT	4	SN:B10186--
5	01643-31232	WASHER	4	SN:B10186--
6	01010-81020	BOLT	2	SN:B10186--
7	01643-31032	WASHER	2	SN:B10186--
8	419-54-B5540	PLATE	1	SN:B10289--
	419-54-32672	PLATE	1	SN:B10186--B10288
9	01225-70616	SCREW	10	SN:B10186--
10	418-926-3490	WASHER	10	SN:B10186--
11	418-54-32424	PLATE	1	SN:B10186--
12	01010-80616	BOLT	2	SN:B10186--
13	01643-30623	WASHER	2	SN:B10186--
14	418-926-3490	WASHER	2	SN:B10186--
15	01225-70616	SCREW	2	SN:B10186--
16	418-43-38311	PLATE	1	SN:B10186--
17	418-926-3490	WASHER	2	SN:B10186--
18	01225-70616	SCREW	2	SN:B10186--
19	418-54-32891	COVER	1	SN:B10186--
20	421-54-22750	HANDLE	1	SN:B10186--
20A	421-09-12780	CUSHION	4	SN:B10186--
21	23S-55-51530	CLIP	2	SN:B10186--
22	419-54-B5530	COVER	1	SN:B10235--
	419-54-B4170	COVER	1	SN:B10186--B10234
23	01225-70616	SCREW	2	SN:B10186--
24	418-926-3490	WASHER	2	SN:B10186--
25	418-43-31241	BRACKET	1	SN:B10186--
26	421-43-31520	REST	1	SN:B10186--
27	01010-80616	BOLT	2	SN:B10186--
28	01643-30623	WASHER	2	SN:B10186--
29	421-43-31551	LEVER	1	SN:B10186--
30	418-54-32241	BRACKET	1	SN:B10186--
31	01010-81020	BOLT	2	SN:B10186--
32	01643-31032	WASHER	2	SN:B10186--
33	09415-01610	CAP	1	SN:B10186--

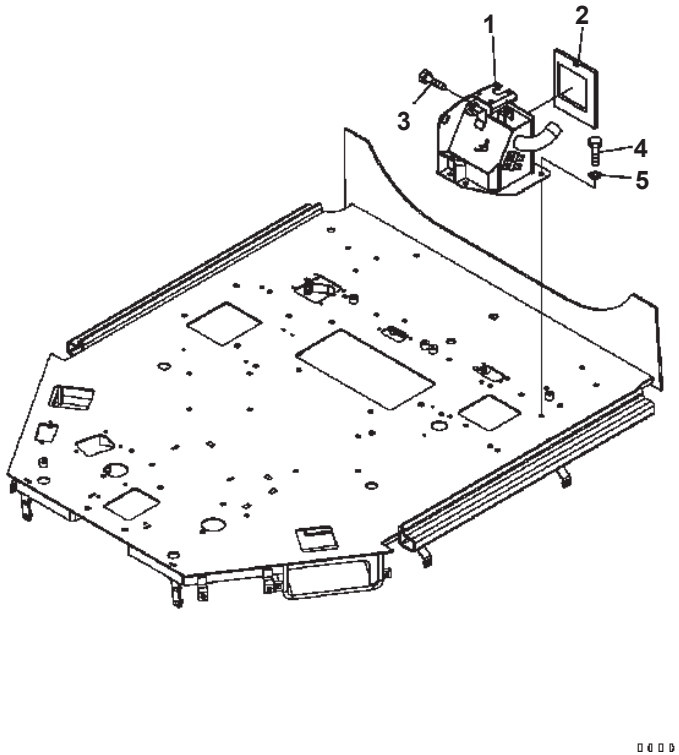

WA320-5 S/N B10001-UP

FLOOR (CONSOLE BOX) (L.H.) (FOR AIR CONDITIONER LESS)

Item	Part No.	Description	Qty	Options
1	418-54-32921	BOX	1	SN:B10042--
	418-54-32920	BOX	1	SN:B10001--B10041
2	418-07-33110	SHEET	1	SN:B10001--
3	02030-70719	BOLT	1	SN:B10001--
4	01010-81020	BOLT	4	SN:B10001--
5	01643-31032	WASHER	4	SN:B10001--

Ref. K0210-06A5 Page 240130

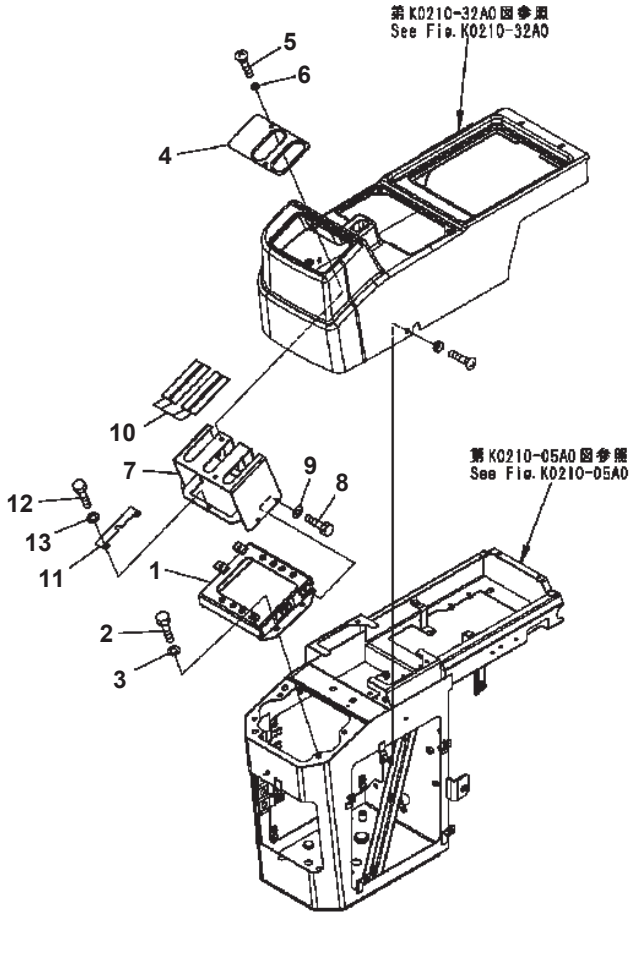

WA320-5 S/N B10001-UP

FLOOR (COVER R.H.) (2-LEVER) (#B10001-B10228)

Item	Part No.	Description	Qty	Options
1	418-54-32940	BRACKET	1	SN:B10001--B10228
2	01010-80816	BOLT	4	SN:B10001--B10228
3	01643-30823	WASHER	4	SN:B10001--B10228
4	419-54-32660	COVER	1	SN:B10001--B10228
5	01225-70616	SCREW	2	SN:B10001--B10228
6	418-926-3490	WASHER	2	SN:B10001--B10228
7	419-54-32641	BRACKET	1	SN:B10001--B10228
8	01010-80612	BOLT	4	SN:B10001--B10228
9	01643-30623	WASHER	4	SN:B10001--B10228
10	419-54-32650	AWNING	4	SN:B10001--B10228
11	419-54-32710	PLATE	1	SN:B10001--B10228
12	01010-80612	BOLT	2	SN:B10001--B10228
13	01643-30623	WASHER	2	SN:B10001--B10228

Ref. K0210-07A0 Page 240140

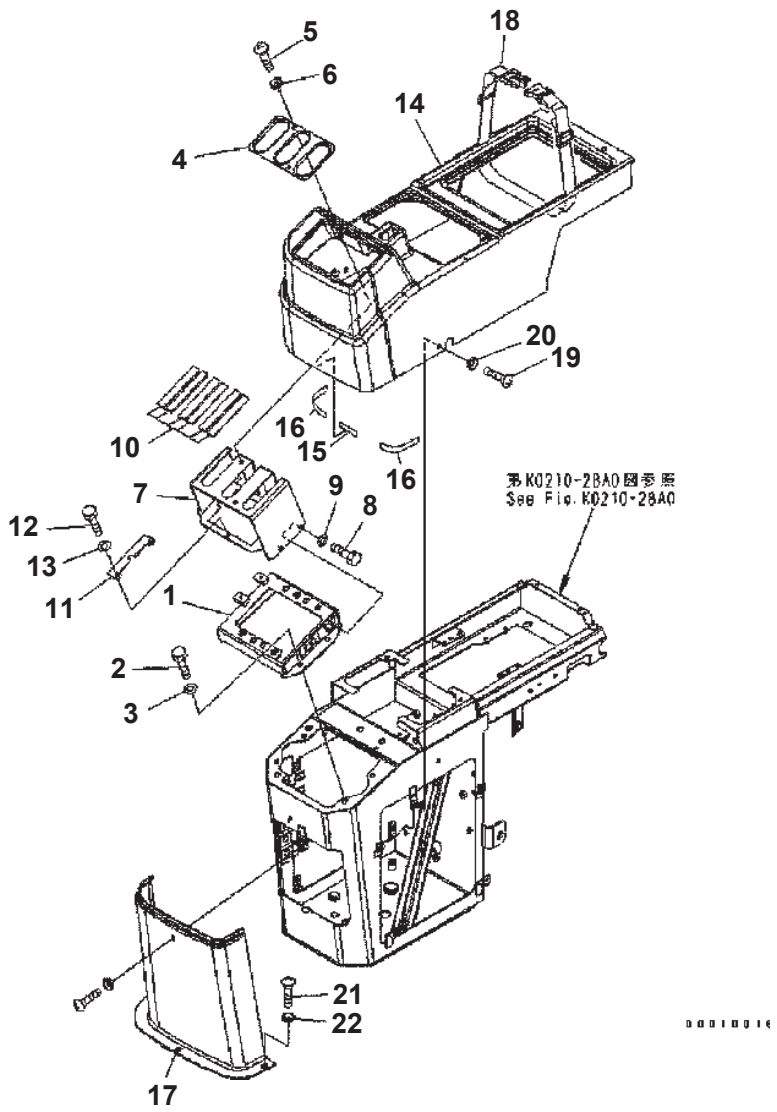

FLOOR (COVER R.H.) (3-LEVER) (#B10001-B10228)

Item	Part No.	Description	Qty	Options
1	418-54-32940	BRACKET	1	SN:B10001--B10228
2	01010-80816	BOLT	4	SN:B10001--B10228
3	01643-30823	WASHER	4	SN:B10001--B10228
4	419-54-32660	COVER	1	SN:B10001--B10228
5	01225-70616	SCREW	2	SN:B10001--B10228
6	418-926-3490	WASHER	2	SN:B10001--B10228
7	419-54-32641	BRACKET	1	SN:B10001--B10228
8	01010-80612	BOLT	4	SN:B10001--B10228
9	01643-30623	WASHER	4	SN:B10001--B10228
10	419-54-32650	AWNING	6	SN:B10001--B10228
11	419-54-32710	PLATE	1	SN:B10001--B10228
12	01010-80612	BOLT	2	SN:B10001--B10228
13	01643-30623	WASHER	2	SN:B10001--B10228
14	419-54-32613	COVER	1	SN:B10001--B10228
15	421-09-12780	CUSHION	1	SN:B10001--B10228
16	418-54-22190	CUSHION	2	SN:B10001--B10228
17	418-54-32870	COVER	1	SN:B10001--B10228
18	421-54-32790	BAND	1	SN:B10001--B10228
19	01225-70616	SCREW	2	SN:B10001--B10228
20	418-926-3490	WASHER	2	SN:B10001--B10228
21	01225-70616	SCREW	5	SN:B10001--B10228
22	418-926-3490	WASHER	5	SN:B10001--B10228

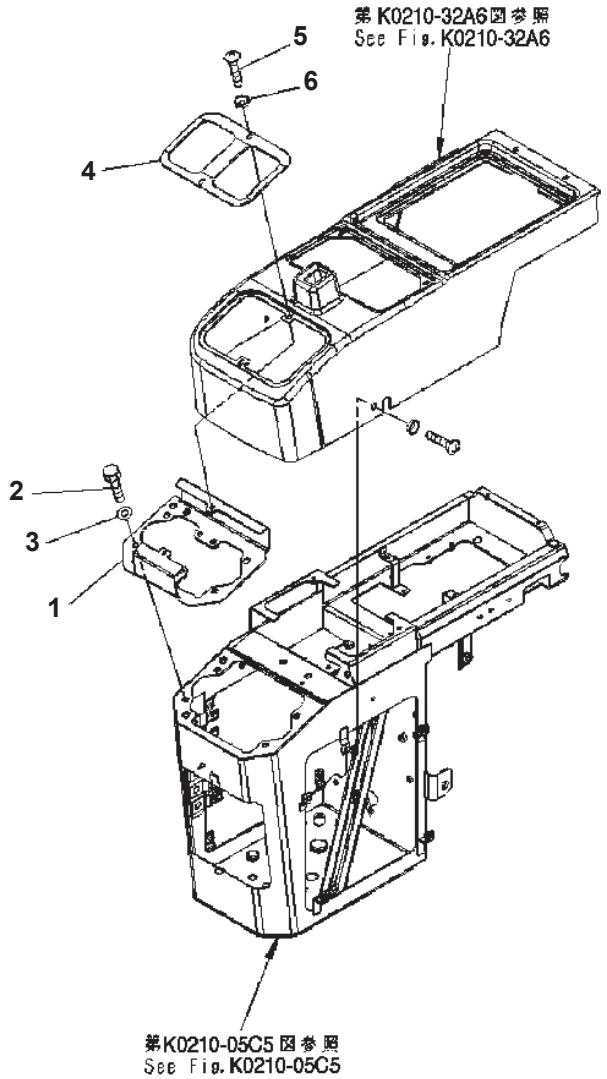

00012856

WA320-5 S/N B10001-UP

FLOOR (COVER R.H.) (FOR 2-PERSONS CAB)

Item	Part No.	Description	Qty	Options
1	418-54-32253	PLATE	1	SN:B10001--
2	01010-80816	BOLT	4	SN:B10001--
3	01643-30823	WASHER	4	SN:B10001--
4	418-S35-3120	PLATE	1	SN:B10001--
5	01225-70616	SCREW	2	SN:B10001--
6	418-926-3490	WASHER	2	SN:B10001--

Ref. K0210-07B1 Page 240160

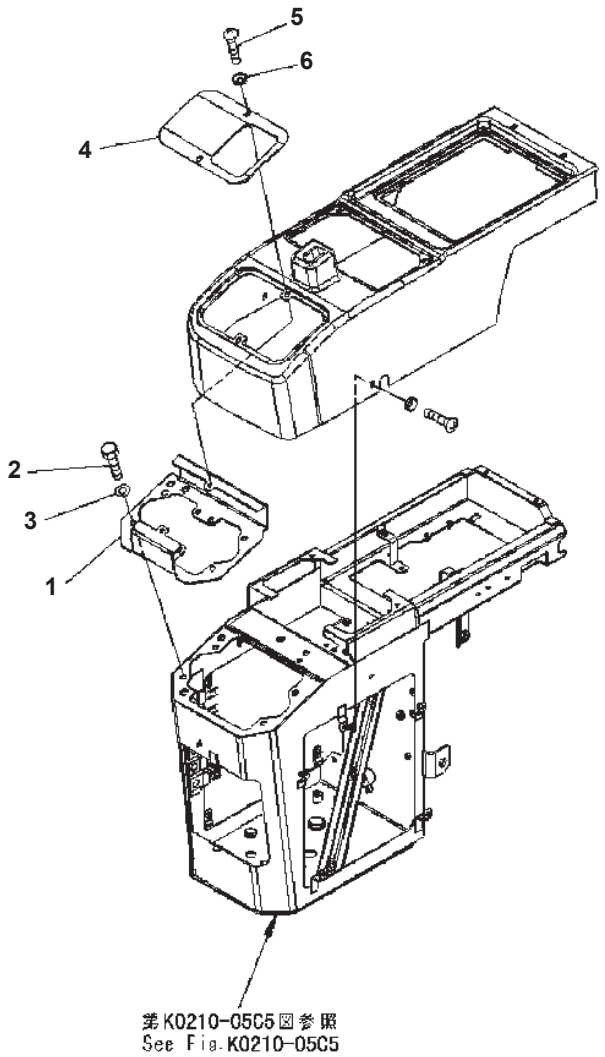

00010653

FLOOR (COVER R.H.) (FOR MONO LEVER) (#B10229-)

Item	Part No.	Description	Qty	Options
1	418-54-32252	PLATE	1	SN:B10229--
2	01010-80816	BOLT	4	SN:B10229--
3	01643-30823	WASHER	4	SN:B10229--
4	418-54-32263	PLATE	1	SN:B10229--
5	01225-70616	SCREW	2	SN:B10229--
6	418-926-3490	WASHER	2	SN:B10229--

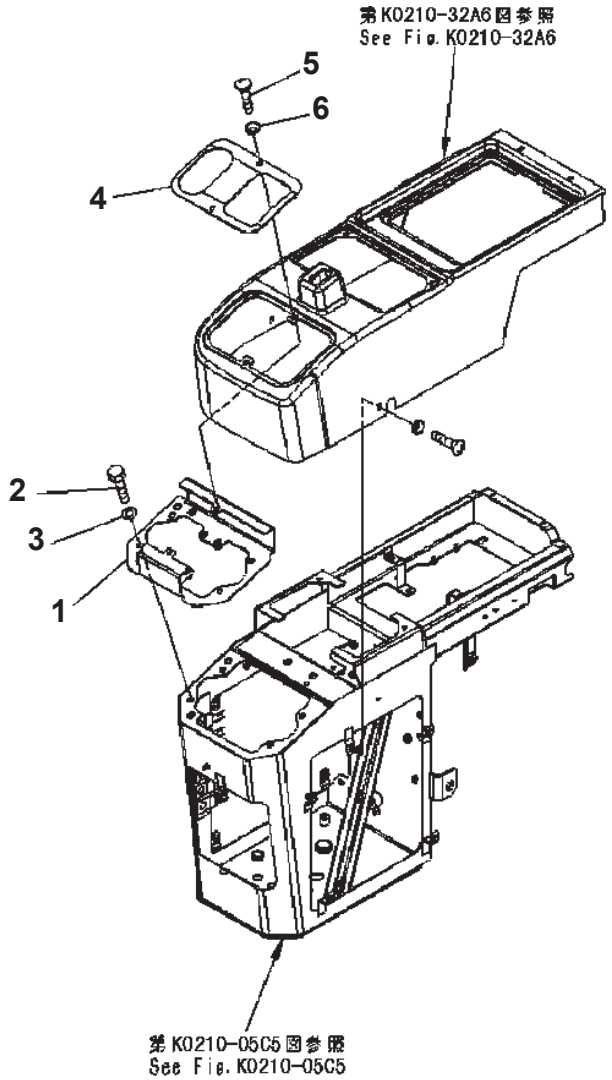

00002719

FLOOR (COVER R.H.) (FOR MONO + 1-ATTACHMENT LEVER) (#B10229-)

Item	Part No.	Description	Qty	Options
1	418-54-32252	PLATE	1	SN:B10229--
2	01010-80816	BOLT	4	SN:B10229--
3	01643-30823	WASHER	4	SN:B10229--
4	418-U77-3681	COVER	1	SN:B10229--
5	01225-70616	SCREW	2	SN:B10229--
6	418-926-3490	WASHER	2	SN:B10229--

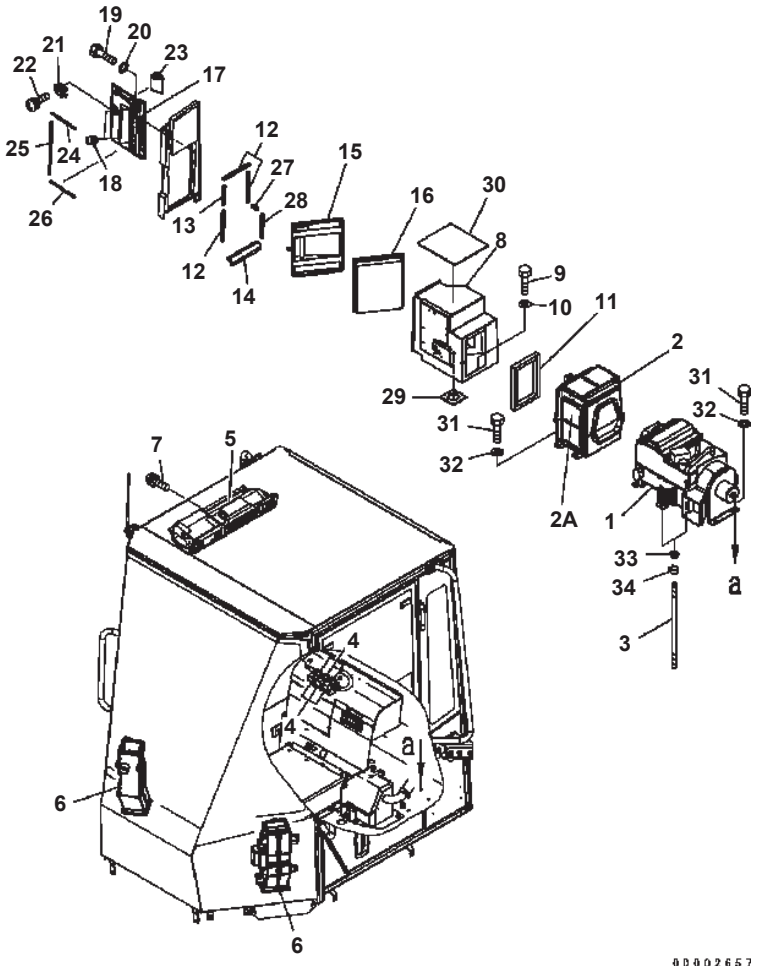

FLOOR (AIR CONDITIONER)

Item	Part No.	Description	Qty	Options
	418-S62-3110	AIR CONDITIONER KIT	1	SN:B10001--
1	(425-07-21111)	· AIR CONDITIONER U.	1	SN:B10001--
2	(421-07-31260)	· DAMPER ASS'Y	1	SN:B10001--
2A	20Y-979-6261	· · FILTER ASS'Y	2	SN:B10001--
3	421-07-21280	· HOSE	2	SN:B10001--
4	20Y-979-6771	· RELAY	6	SN:B10007--
	◆418-S62-3140	· RELAY	6	SN:B10001--B10006
	421-07-31420	KIT	1	SN:B10001--
5	421-07-31240	· CONTROLLER	1	SN:B10001--
6	(425-07-21152)	· DUCT ASS'Y	2	SN:B10001--
7	01023-10514	SCREW	4	SN:B10001--
8	418-07-B3490	BOX	1	SN:B10523--
	□418-07-33413	BOX	1	SN:B10001--B10522
9	01010-81025	BOLT	3	SN:B10001--
10	01643-31032	WASHER	3	SN:B10001--
11	423-07-23530	SHEET	1	SN:B10001--
12	418-07-33432	SHEET	3	SN:B10001--
13	418-07-33442	SHEET	1	SN:B10001--
14	418-07-33462	SHEET	1	SN:B10001--
15	418-07-B3471	COVER	1	SN:B10523--
	418-07-B3470	COVER	1	SN:B10046--B10522
	418-07-33474	COVER	1	SN:B10001--B10045
16	427-07-22120	FILTER	1	SN:B10001--
17	418-926-B640	COVER	1	SN:B10021--
	418-926-3672	COVER	1	SN:B10001--B10020
18	20Y-54-52791	STOPPER	2	SN:B10001--
19	01010-80620	BOLT	2	SN:B10001--
20	01643-30623	WASHER	2	SN:B10001--
21	22M-54-19170	STOPPER	1	SN:B10001--
22	01023-10512	SCREW	2	SN:B10724--
	◆01023-10412	SCREW	2	SN:B10021--B10723
	01023-10512	SCREW	2	SN:B10001--B10020
23	418-926-3660	HANDLE	1	SN:B10001--
24	418-07-33511	CUSHION	2	SN:B10001--
25	418-07-33521	CUSHION	1	SN:B10001--
26	418-07-33540	CUSHION	1	SN:B10001--
27	418-07-33480	FINISHER	1	SN:B10001--
28	418-07-33490	FINISHER	1	SN:B10001--
29	421-07-23420	SHEET	1	SN:B10001--
30	418-54-33550	INSULATOR	1	SN:B10001--

WA320-5 S/N B10001-UP

FLOOR (AIR CONDITIONER)

Item	Part No.	Description	Qty	Options
31	01010-81025	BOLT	7	SN:B10001--
32	01643-31032	WASHER	7	SN:B10001--
33	421-09-21380	GROMMET	2	SN:B10001--
34	07285-00155	CLIP	2	SN:B10029--
	07285-00150	CLIP	2	SN:B10001--B10028

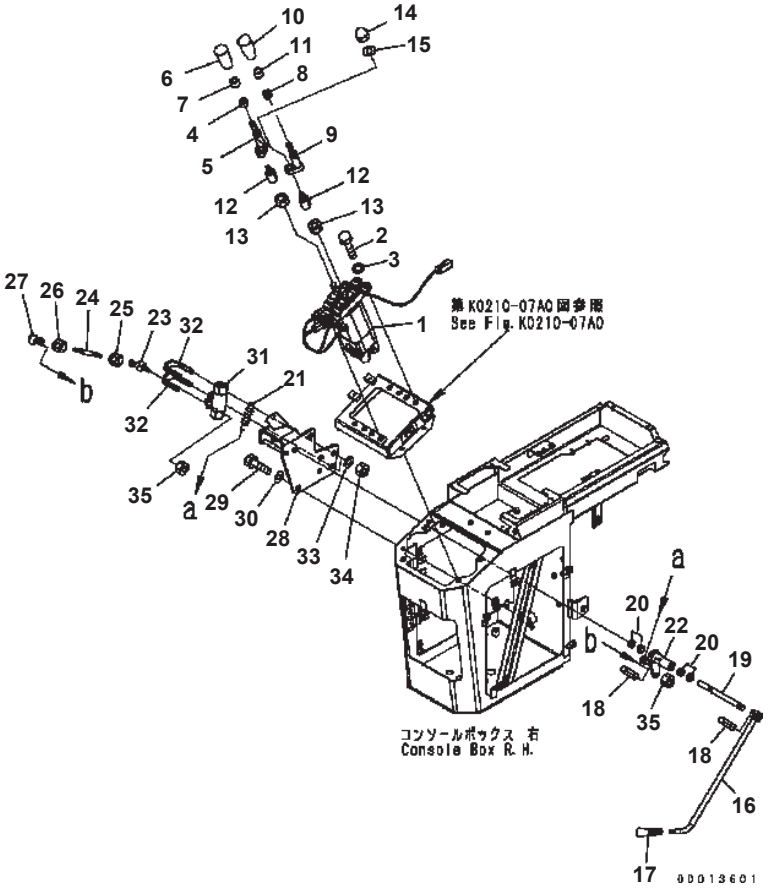

FLOOR (LOADER CONTROL) (1/2) (P.P.C VALVE AND LEVER) (2-LEVER) (#B10001-B10228)

Item	Part No.	Description	Qty	Options
1	(702-16-03812)	PILOT VALVE	1	SN:B10001--B10228
2	01010-81025	BOLT	4	SN:B10001--B10228
3	01643-31032	WASHER	4	SN:B10001--B10228
	418-43-38411	LEVER ASS'Y	1	SN:B10001--B10228
4	23S-43-31550	· NUT	1	SN:B10001--B10228
5	421-43-37591	· LEVER	1	SN:B10001--B10228
6	421-43-38332	· KNOB	1	SN:B10001--B10228
7	421-43-38430	· COLLAR	1	SN:B10001--B10228
	418-43-38421	LEVER ASS'Y	1	SN:B10001--B10228
8	23S-43-31550	· NUT	1	SN:B10001--B10228
9	421-43-37591	· LEVER	1	SN:B10001--B10228
10	421-43-38332	· KNOB	1	SN:B10001--B10228
11	421-43-38430	· COLLAR	1	SN:B10001--B10228
12	23S-43-51111	LEVER	2	SN:B10001--B10228
13	01583-11408	NUT	2	SN:B10001--B10228
14	01546-10812	NUT	2	SN:B10001--B10228
15	01643-50823	WASHER	2	SN:B10001--B10228
16	418-43-38142	LEVER	1	SN:B10001--B10228
17	09305-00800	KNOB	1	SN:B10001--B10228
18	04025-00520	PIN	2	SN:B10001--B10228
19	418-43-38131	SHAFT	1	SN:B10001--B10228
20	421-09-21220	BUSHING	4	SN:B10001--B10228
21	203-43-21370	SPRING	1	SN:B10001--B10228
22	418-43-38120	LEVER	1	SN:B10001--B10228
23	04256-40615	JOINT	1	SN:B10039--B10228
	◆04256-40616	JOINT	1	SN:B10001--B10038
24	418-43-28150	ROD	1	SN:B10001--B10228
25	01580-10605	NUT	1	SN:B10001--B10228
26	01508-40603	NUT	1	SN:B10001--B10228
27	04256-50616	JOINT	1	SN:B10001--B10228
28	418-43-38112	BRACKET	1	SN:B10001--B10228
29	01010-81220	BOLT	2	SN:B10001--B10228
30	01643-31232	WASHER	2	SN:B10001--B10228
31	20Y-62-15651	VALVE	1	SN:B10001--B10228
32	07283-33442	CLIP	2	SN:B10001--B10228
33	01643-31032	WASHER	4	SN:B10001--B10228
34	01597-01009	NUT	4	SN:B10001--B10228
35	426-09-11130	NUT	2	SN:B10001--B10228

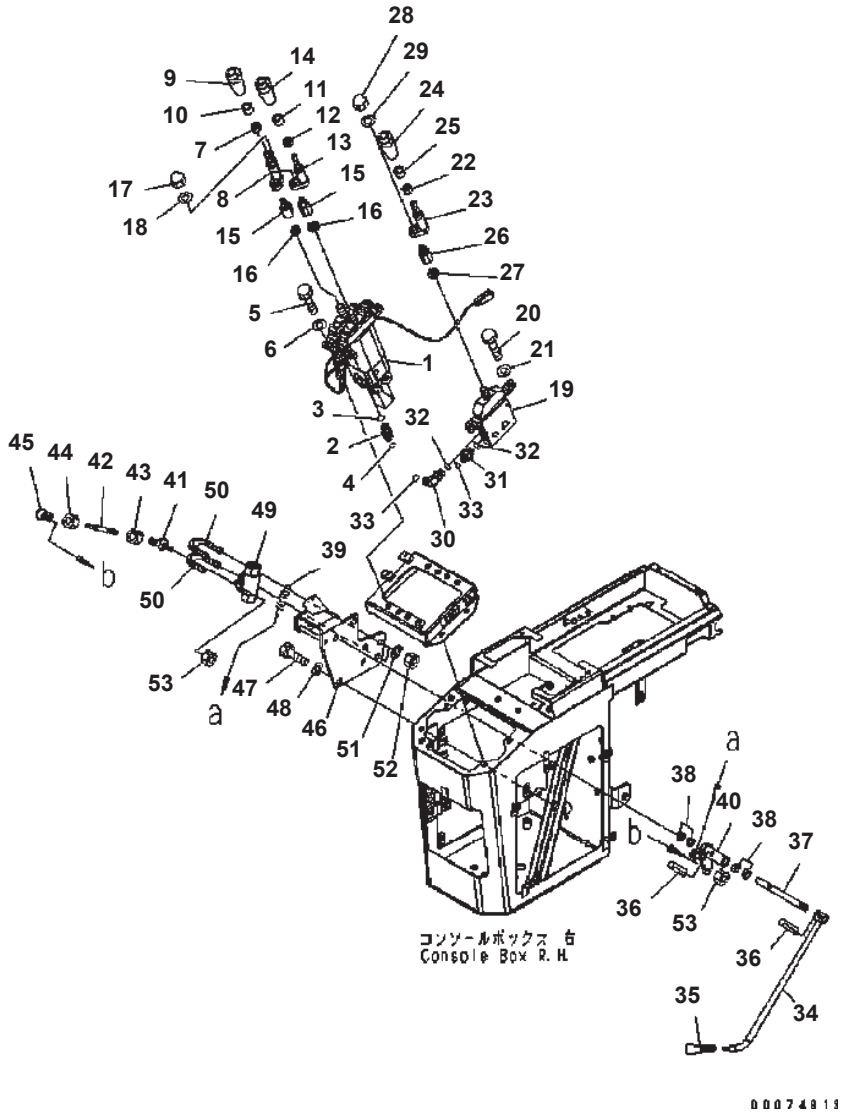

WA320-5 S/N B10001-UP

FLOOR (LOADER CONTROL) (1/2) (P.P.C VALVE AND LEVER) (3-LEVER) (#B10001-B10228)

Item	Part No.	Description	Qty	Options
1	(702-16-03812)	PILOT VALVE	1	SN:B10001--B10228
2	21N-64-37130	UNION	4	SN:B10001--B10228
3	07002-11423	O-RING	4	SN:B10001--B10228
4	02896-11009	O-RING	4	SN:B10001--B10228
5	01010-81025	BOLT	4	SN:B10001--B10228
6	01643-31032	WASHER	4	SN:B10001--B10228
	418-43-38411	LEVER ASS'Y	1	SN:B10001--B10228
7	23S-43-31550	· NUT	1	SN:B10001--B10228
8	421-43-37591	· LEVER	1	SN:B10001--B10228
9	421-43-38332	· KNOB	1	SN:B10001--B10228
10	421-43-38430	· COLLAR	1	SN:B10001--B10228
	418-43-38421	LEVER ASS'Y	1	SN:B10001--B10228
11	421-43-38430	· COLLAR	1	SN:B10001--B10228
12	23S-43-31550	· NUT	1	SN:B10001--B10228
13	421-43-37591	· LEVER	1	SN:B10001--B10228
14	421-43-38332	· KNOB	1	SN:B10001--B10228
15	23S-43-51111	LEVER	2	SN:B10001--B10228
16	01583-11408	NUT	2	SN:B10001--B10228
17	01546-10812	NUT	2	SN:B10001--B10228
18	01643-50823	WASHER	2	SN:B10001--B10228
19	702-16-03370	PILOT VALVE	1	SN:B10001--B10228
20	01010-81025	BOLT	2	SN:B10001--B10228
21	01643-31032	WASHER	2	SN:B10001--B10228
	418-43-38421	LEVER ASS'Y	1	SN:B10001--B10228
22	23S-43-31550	· NUT	1	SN:B10001--B10228
23	421-43-37591	· LEVER	1	SN:B10001--B10228
24	421-43-38332	· KNOB	1	SN:B10001--B10228
25	421-43-38430	· COLLAR	1	SN:B10001--B10228
26	23S-43-51111	LEVER	1	SN:B10001--B10228
27	01583-11408	NUT	1	SN:B10001--B10228
28	01546-10812	NUT	1	SN:B10001--B10228
29	01643-50823	WASHER	1	SN:B10001--B10228
30	21W-62-43980	ELBOW	1	SN:B10001--B10228
31	11Y-62-12140	NIPPLE	1	SN:B10001--B10228
32	07000-12011	O-RING	2	SN:B10001--B10228
33	02896-11008	O-RING	2	SN:B10001--B10228
34	418-43-38142	LEVER	1	SN:B10001--B10228
35	09305-00800	KNOB	1	SN:B10001--B10228
36	04025-00520	PIN	2	SN:B10001--B10228

Ref. K0210-09B5 Page 240210

WA320-5 S/N B10001-UP

FLOOR (LOADER CONTROL) (1/2) (P.P.C VALVE AND LEVER) (3-LEVER) (#B10001-B10228)

Item	Part No.	Description	Qty	Options
37	418-43-38131	SHAFT	1	SN:B10001--B10228
38	421-09-21220	BUSHING	4	SN:B10001--B10228
39	203-43-21370	SPRING	1	SN:B10001--B10228
40	418-43-38120	LEVER	1	SN:B10001--B10228
41	04256-40615	JOINT	1	SN:B10001--B10228
42	418-43-28150	ROD	1	SN:B10001--B10228
43	01580-10605	NUT	1	SN:B10001--B10228
44	01508-40603	NUT	1	SN:B10001--B10228
45	04256-50616	JOINT	1	SN:B10001--B10228
46	418-43-38112	BRACKET	1	SN:B10001--B10228
47	01010-81220	BOLT	2	SN:B10001--B10228
48	01643-31232	WASHER	2	SN:B10001--B10228
49	20Y-62-15651	VALVE	1	SN:B10001--B10228
50	07283-33442	CLIP	2	SN:B10001--B10228
51	01643-31032	WASHER	4	SN:B10001--B10228
52	01597-01009	NUT	4	SN:B10001--B10228
53	426-09-11130	NUT	2	SN:B10001--B10228

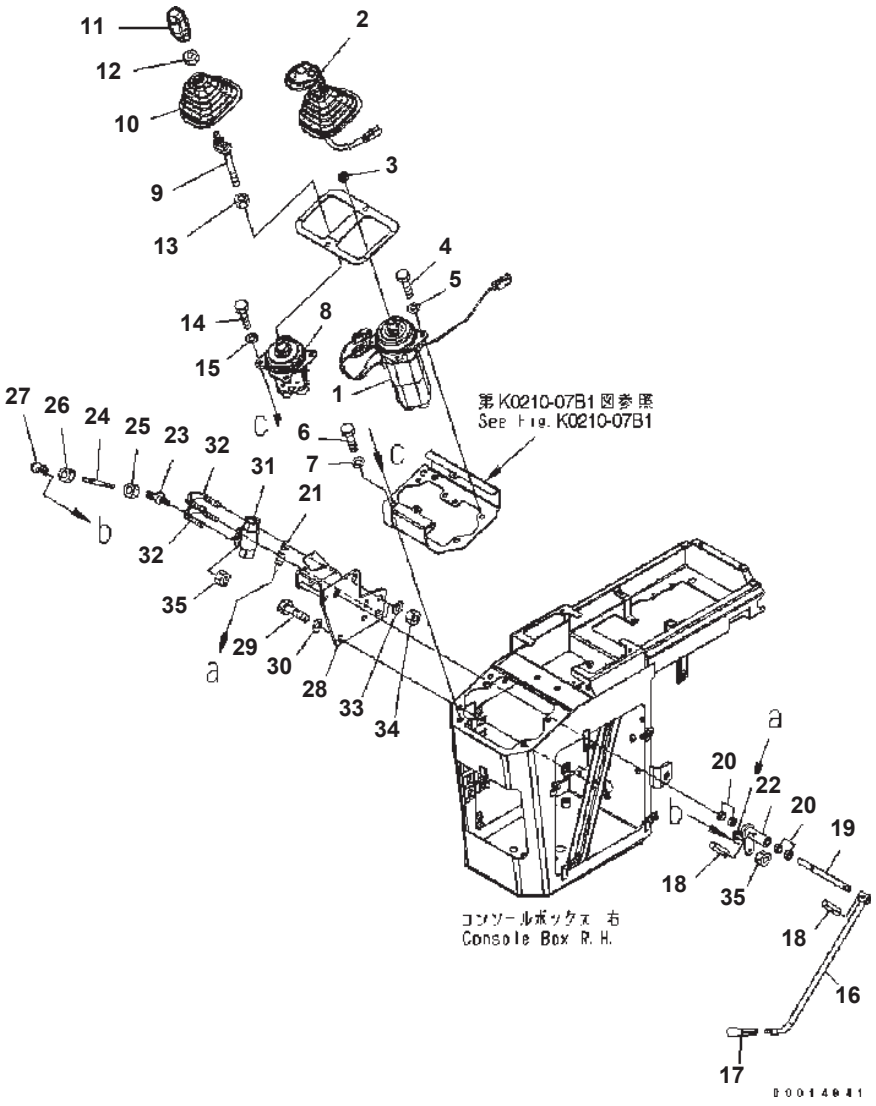

FLOOR (LOADER CONTROL) (1/2) (P.P.C VALVE AND LEVER) (FOR MONO+MONO LEVER)

Item	Part No.	Description	Qty	Options
1	(702-16-03851)	PILOT VALVE	1	SN:B10001--
2	418-43-36184	KNOB ASS'Y	1	SN:B10001--
3	01582-11411	NUT	1	SN:B10001--
4	01010-80820	BOLT	4	SN:B10001--
5	01643-30823	WASHER	4	SN:B10001--
6	01010-81016	BOLT	1	SN:B10001--
7	01643-31032	WASHER	1	SN:B10001--
8	(702-16-03740)	PILOT VALVE	1	SN:B10001--
9	418-S35-3111)	LEVER	1	SN:B10001--
10	418-43-38190	BOOT	1	SN:B10001--
11	421-43-28410	KNOB	1	SN:B10001--
12	421-09-21230	NUT	1	SN:B10001--
13	01582-11411	NUT	1	SN:B10001--
14	01010-80820	BOLT	4	SN:B10001--
15	01643-30823	WASHER	4	SN:B10001--
16	418-43-38142	LEVER	1	SN:B10001--
17	09305-00800	KNOB	1	SN:B10001--
18	04025-00520	PIN	2	SN:B10001--
19	418-43-38131	SHAFT	1	SN:B10001--
20	421-09-21220	BUSHING	4	SN:B10001--
21	203-43-21370	SPRING	1	SN:B10001--
22	418-43-38120	LEVER	1	SN:B10001--
23	04256-40615	JOINT	1	SN:B10001--
24	418-43-28150	ROD	1	SN:B10001--
25	01580-10605	NUT	1	SN:B10001--
26	01508-40603	NUT	1	SN:B10001--
27	04256-50616	JOINT	1	SN:B10001--
28	418-43-38112	BRACKET	1	SN:B10001--
29	01010-81220	BOLT	2	SN:B10001--
30	01643-31232	WASHER	2	SN:B10001--
31	20Y-62-15651	VALVE	1	SN:B10001--
32	07283-33442	CLIP	2	SN:B10001--
33	01643-31032	WASHER	4	SN:B10001--
34	01597-01009	NUT	4	SN:B10001--
35	426-09-11130	NUT	2	SN:B10001--

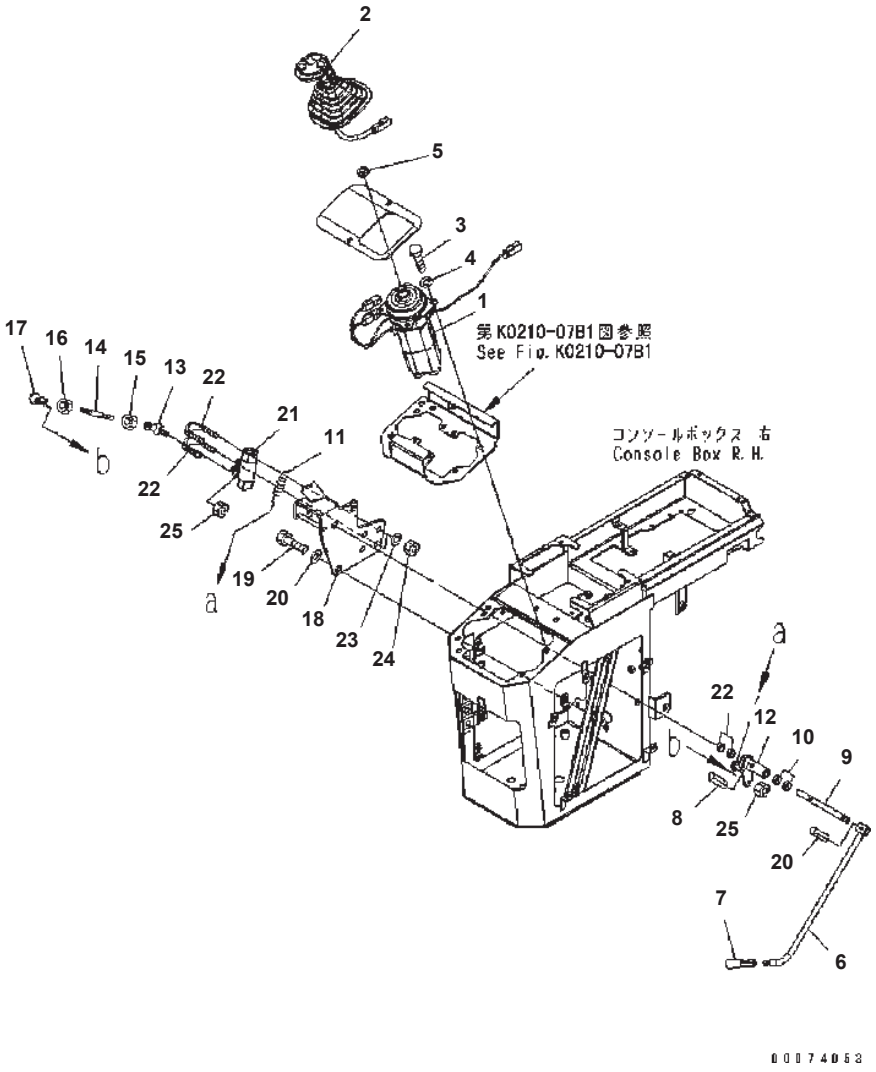

WA320-5 S/N B10001-UP

FLOOR (LOADER CONTROL) (1/2) (P.P.C VALVE AND LEVER) (FOR MONO LEVER) (#B10229-)

Item	Part No.	Description	Qty	Options
1	(702-16-03851)	PILOT VALVE	1	SN:B10229--
2	418-43-38163	KNOB ASS'Y	1	SN:B10229--
3	01010-80820	BOLT	4	SN:B10229--
4	01643-30823	WASHER	4	SN:B10229--
5	01582-11411	NUT	1	SN:B10229--
6	418-43-38142	LEVER	1	SN:B10229--
7	09305-00800	KNOB	1	SN:B10229--
8	04025-00520	PIN	2	SN:B10229--
9	418-43-38131	SHAFT	1	SN:B10229--
10	421-09-21220	BUSHING	4	SN:B10229--
11	203-43-21370	SPRING	1	SN:B10229--
12	418-43-38120	LEVER	1	SN:B10229--
13	04256-40615	JOINT	1	SN:B10229--
14	418-43-28150	ROD	1	SN:B10229--
15	01580-10605	NUT	1	SN:B10229--
16	01508-40603	NUT	1	SN:B10229--
17	04256-50616	JOINT	1	SN:B10229--
18	418-43-38112	BRACKET	1	SN:B10229--
19	01010-81220	BOLT	2	SN:B10229--
20	01643-31232	WASHER	2	SN:B10229--
21	20Y-62-15651	VALVE	1	SN:B10229--
22	07283-33442	CLIP	2	SN:B10229--
23	01643-31032	WASHER	4	SN:B10229--
24	01597-01009	NUT	4	SN:B10229--
25	426-09-11130	NUT	2	SN:B10229--

Ref. K0210-09C5 Page 240230

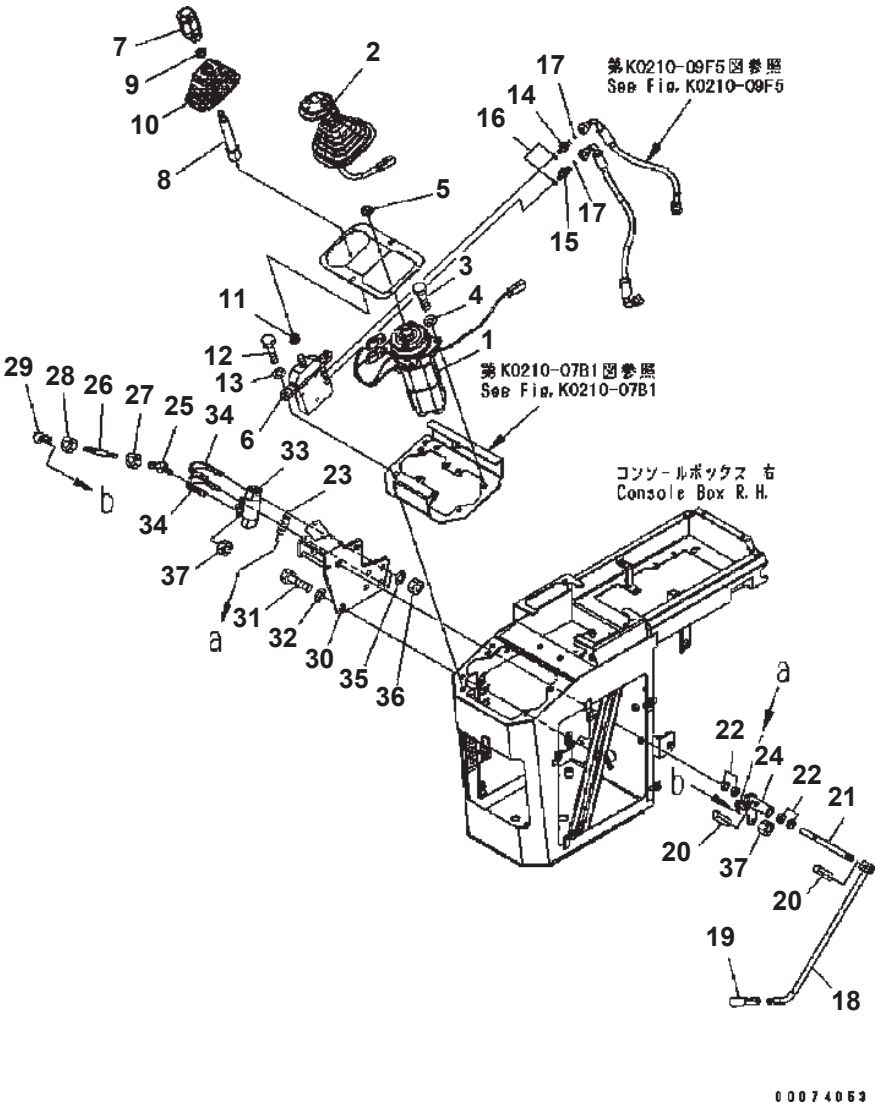

FLOOR (LOADER CONTROL) (1/2) (P.P.C VALVE AND LEVER) (FOR MONO + 1-ATTACHMENT LEVER) (#B10229-)

Item	Part No.	Description	Qty	Options
1	(702-16-03851)	PILOT VALVE	1	SN:B10229--
2	418-43-38163	KNOB ASS'Y	1	SN:B10229--
3	01010-80820	BOLT	4	SN:B10229--
4	01643-30823	WASHER	4	SN:B10229--
5	01582-11411	NUT	1	SN:B10229--
6	702-16-03370	PILOT VALVE	1	SN:B10229--
7	421-43-28410	KNOB	1	SN:B10229--
8	418-U77-3761	LEVER	1	SN:B10229--
9	421-09-21230	NUT	1	SN:B10229--
10	421-43-28431	BOOT	1	SN:B10229--
11	01582-11411	NUT	1	SN:B10229--
12	01010-81025	BOLT	2	SN:B10229--
13	01643-31032	WASHER	2	SN:B10229--
14	21W-62-41780	NIPPLE	1	SN:B10229--
15	11Y-62-12140	NIPPLE	1	SN:B10229--
16	07000-12011	O-RING	2	SN:B10229--
17	02896-11008	O-RING	2	SN:B10229--
18	418-43-38142	LEVER	1	SN:B10229--
19	09305-00800	KNOB	1	SN:B10229--
20	04025-00520	PIN	2	SN:B10229--
21	418-43-38131	SHAFT	1	SN:B10229--
22	421-09-21220	BUSHING	4	SN:B10229--
23	203-43-21370	SPRING	1	SN:B10229--
24	418-43-38120	LEVER	1	SN:B10229--
25	04256-40615	JOINT	1	SN:B10229--
26	418-43-28150	ROD	1	SN:B10229--
27	01580-10605	NUT	1	SN:B10229--
28	01508-40603	NUT	1	SN:B10229--
29	04256-50616	JOINT	1	SN:B10229--
30	418-43-38112	BRACKET	1	SN:B10229--
31	01010-81220	BOLT	2	SN:B10229--
32	01643-31232	WASHER	2	SN:B10229--
33	20Y-62-15651	VALVE	1	SN:B10229--
34	07283-33442	CLIP	2	SN:B10229--
35	01643-31032	WASHER	4	SN:B10229--
36	01597-01009	NUT	4	SN:B10229--
37	426-09-11130	NUT	2	SN:B10229--

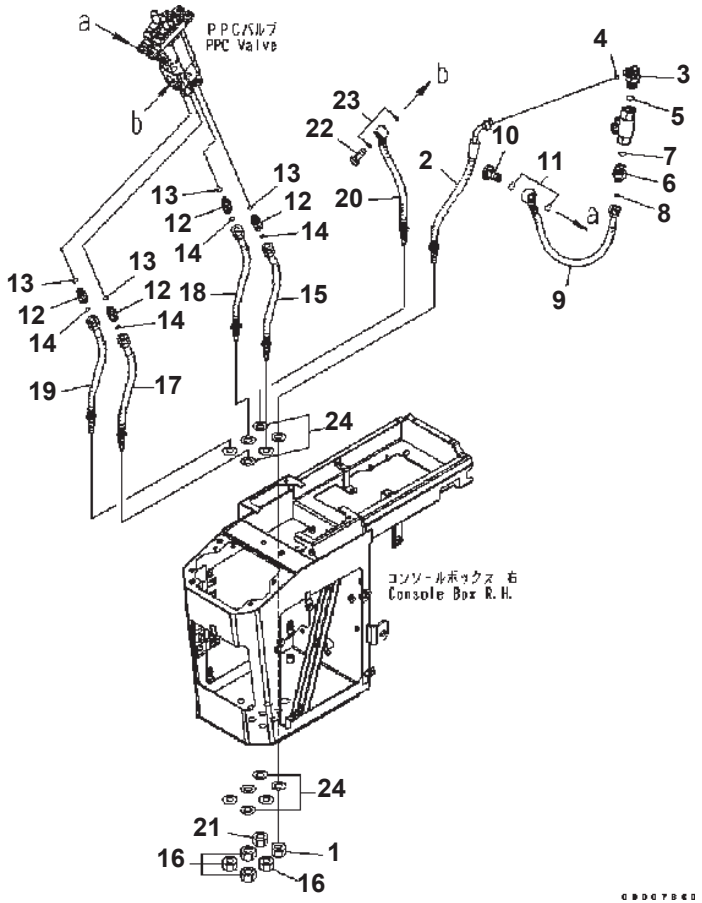

FLOOR (LOADER CONTROL) (2/2) (HOSE) (2-LEVER) (#B10001-B10228)

Item	Part No.	Description	Qty	Options
1	01583-11408	NUT	1	SN:B10001--B10228
2	419-43-38130	HOSE, RED-YELLOW	1	SN:B10001--B10228
3	02782-10315	ELBOW	1	SN:B10001--B10228
4	02896-11009	O-RING	1	SN:B10001--B10228
5	07002-12034	O-RING	1	SN:B10001--B10228
6	02781-00315	UNION	1	SN:B10001--B10228
7	07002-12034	O-RING	1	SN:B10001--B10228
8	02896-11009	O-RING	1	SN:B10001--B10228
9	419-43-38391	HOSE	1	SN:B10001--B10228
10	702-16-53240	PLUG	1	SN:B10001--B10228
11	07000-12018	O-RING	2	SN:B10001--B10228
12	21N-64-37130	UNION	4	SN:B10001--B10228
13	07002-11423	O-RING	4	SN:B10001--B10228
14	02896-11009	O-RING	4	SN:B10001--B10228
15	419-43-38340	HOSE, RED	1	SN:B10001--B10228
16	01583-11408	NUT	4	SN:B10001--B10228
17	419-43-38350	HOSE, BLUE	1	SN:B10001--B10228
18	419-43-38360	HOSE, YELLOW	1	SN:B10001--B10228
19	419-43-38370	HOSE, ORANGE	1	SN:B10001--B10228
20	419-43-38380	HOSE	1	SN:B10001--B10228
21	01583-11408	NUT	1	SN:B10001--B10228
22	20Y-62-16170	BOLT	1	SN:B10001--B10228
23	07000-12015	O-RING	2	SN:B10001--B10228
24	01643-31445	WASHER	12	SN:B10001--B10228

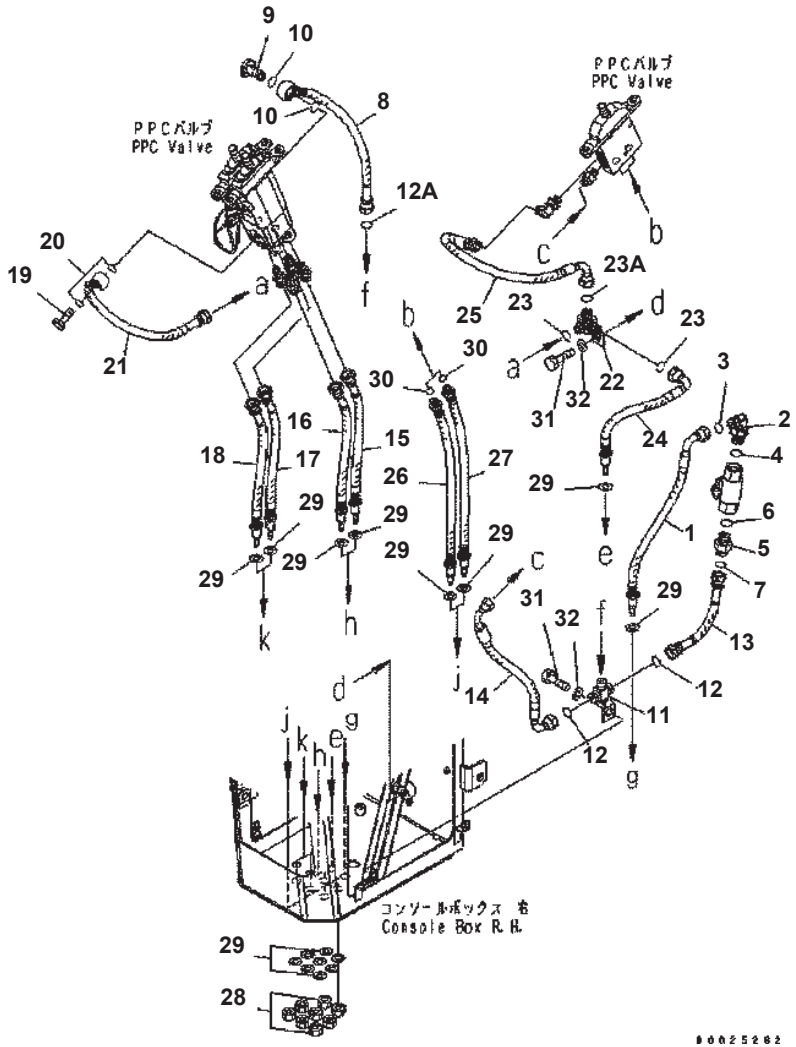

FLOOR (LOADER CONTROL) (2/2) (HOSE) (3-LEVER) (#B10001-B10228)

Item	Part No.	Description	Qty	Options
1	419-43-38130	HOSE, RED-YELLOW	1	SN:B10001--B10228
2	02782-10315	ELBOW	1	SN:B10001--B10228
3	02896-11009	O-RING	1	SN:B10001--B10228
4	07002-12034	O-RING	1	SN:B10001--B10228
5	02781-00315	UNION	1	SN:B10001--B10228
6	07002-12034	O-RING	1	SN:B10001--B10228
7	02896-11009	O-RING	1	SN:B10001--B10228
8	419-877-3540	HOSE, RED-BLUE	1	SN:B10001--B10228
9	702-16-53240	PLUG	1	SN:B10001--B10228
10	07000-12018	O-RING	2	SN:B10001--B10228
11	419-U77-3671	TEE	1	SN:B10001--B10228
12	02896-11009	O-RING	2	SN:B10001--B10228
12A	02896-11008	O-RING	1	SN:B10001--B10228
13	419-U77-3510	HOSE, RED-BLUE	1	SN:B10001--B10228
14	418-43-38440	HOSE, RED-BLUE	1	SN:B10001--B10228
15	419-43-38340	HOSE, RED	1	SN:B10001--B10228
16	419-43-38350	HOSE, BLUE	1	SN:B10001--B10228
17	419-43-38360	HOSE, YELLOW	1	SN:B10001--B10228
18	419-43-38370	HOSE, ORANGE	1	SN:B10001--B10228
19	20Y-62-16170	BOLT	1	SN:B10001--B10228
20	07000-12015	O-RING	2	SN:B10001--B10228
21	419-877-3560	HOSE, BLUE-BLACK	1	SN:B10001--B10228
22	419-U77-3592	TEE	1	SN:B10001--B10228
23	02896-11009	O-RING	2	SN:B10001--B10228
23A	02896-11008	O-RING	1	SN:B10001--B10228
24	419-U77-3540	HOSE, BLUE-BLACK	1	SN:B10001--B10228
25	418-43-38460	HOSE, BLUE-BLACK	1	SN:B10001--B10228
26	419-877-3510	HOSE, GREEN	1	SN:B10001--B10228
27	419-877-3520	HOSE, WHITE-RED	1	SN:B10001--B10228
28	01583-11408	NUT	8	SN:B10001--B10228
29	01643-31445	WASHER	16	SN:B10001--B10228
30	07000-12011	O-RING	2	SN:B10001--B10228
31	01010-81220	BOLT	2	SN:B10001--B10228
32	01643-31232	WASHER	2	SN:B10001--B10228

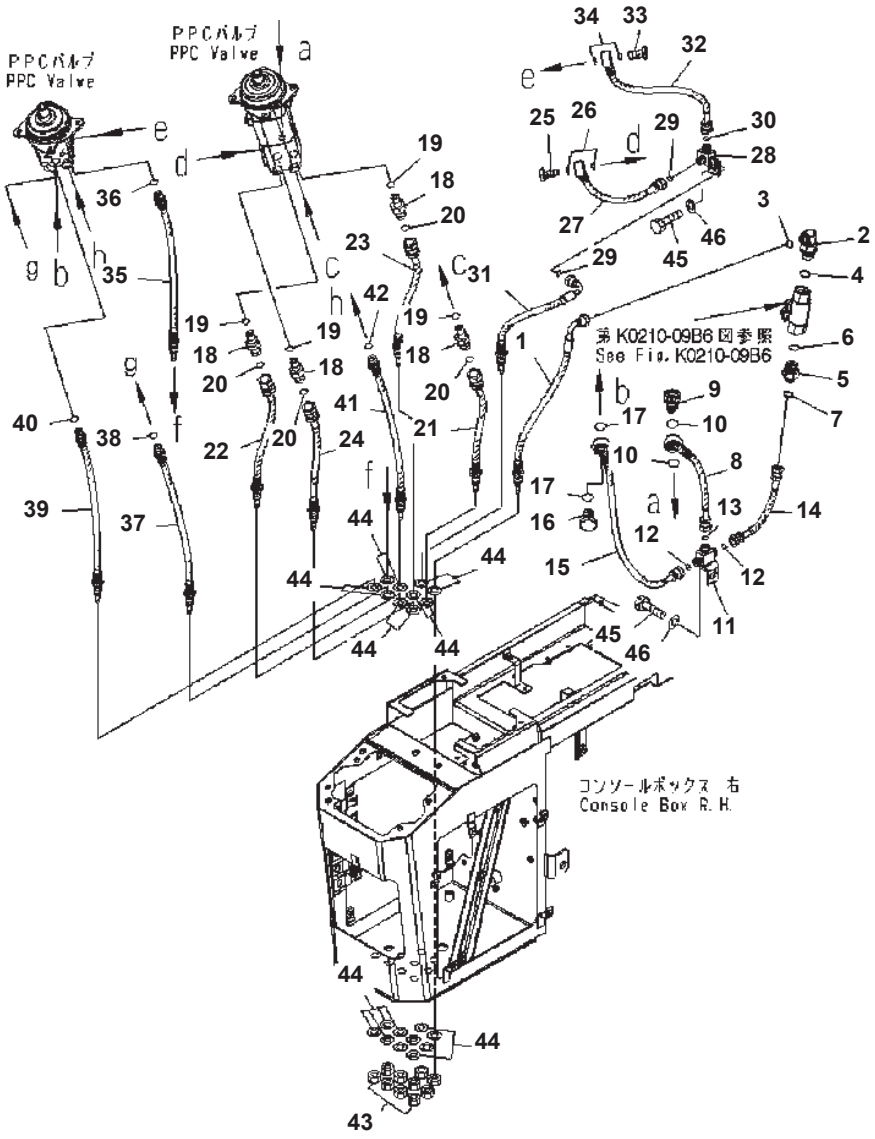

FLOOR (LOADER CONTROL) (2/2) (HOSE) (FOR MONO+MONO LEVER)

Item	Part No.	Description	Qty	Options
1	419-43-38130	HOSE, RED-YELLOW	1	SN:B10001--
2	02782-10315	ELBOW	1	SN:B10001--
3	02896-11009	O-RING	1	SN:B10001--
4	07002-12034	O-RING	1	SN:B10001--
5	02781-00315	UNION	1	SN:B10001--
6	07002-12034	O-RING	1	SN:B10001--
7	02896-11009	O-RING	1	SN:B10001--
8	419-U77-3520	HOSE, RED-BLUE	1	SN:B10001--
9	702-16-53240	PLUG	1	SN:B10001--
10	07000-12018	O-RING	2	SN:B10001--
11	419-U77-3671	TEE	1	SN:B10001--
12	02896-11009	O-RING	2	SN:B10001--
13	02896-11008	O-RING	1	SN:B10001--
14	419-U77-3510	HOSE, RED-BLUE	1	SN:B10001--
15	418-S35-3130	HOSE, RED-BLUE	1	SN:B10001--
16	20Y-62-18910	BOLT	1	SN:B10001--
17	07000-02018	O-RING	2	SN:B10001--
18	21N-64-37130	UNION	4	SN:B10001--
19	07002-11423	O-RING	4	SN:B10001--
20	02896-11009	O-RING	4	SN:B10001--
21	419-43-38240	HOSE, RED	1	SN:B10001--
22	419-43-38250	HOSE, BLUE	1	SN:B10001--
23	419-43-38260	HOSE, YELLOW	1	SN:B10001--
24	419-43-38270	HOSE, ORANGE	1	SN:B10001--
25	20Y-62-16170	BOLT	1	SN:B10001--
26	07000-02015	O-RING	2	SN:B10001--
27	419-U77-3550	HOSE, BLUE-BLACK	1	SN:B10001--
28	419-U77-3592	TEE	1	SN:B10001--
29	02896-11009	O-RING	2	SN:B10001--
30	02896-11008	O-RING	1	SN:B10001--
31	419-U77-3540	HOSE, BLUE-BLACK	1	SN:B10001--
32	418-S35-3180	HOSE, BLUE-BLACK	1	SN:B10001--
33	20Y-62-18890	BOLT	1	SN:B10001--
34	07000-02015	O-RING	2	SN:B10001--
35	419-S35-3150	HOSE, BROWN	1	SN:B10001--
36	07000-12011	O-RING	1	SN:B10001--
37	419-S35-3170	HOSE, BLUE-YELLOW	1	SN:B10001--
38	07000-12011	O-RING	1	SN:B10001--
39	419-S35-3140	HOSE, ORANGE-BLUE	1	SN:B10001--

WA320-5 S/N B10001-UP

FLOOR (LOADER CONTROL) (2/2) (HOSE) (FOR MONO+MONO LEVER)

Item	Part No.	Description	Qty	Options
40	07000-12011	O-RING	1	SN:B10001--
41	419-S35-3160	HOSE, RED-GREEN	1	SN:B10001--
42	07000-12011	O-RING	1	SN:B10001--
43	01583-11408	NUT	10	SN:B10001--
44	01643-31445	WASHER	20	SN:B10001--
45	01010-81220	BOLT	2	SN:B10001--
46	01643-31232	WASHER	2	SN:B10001--

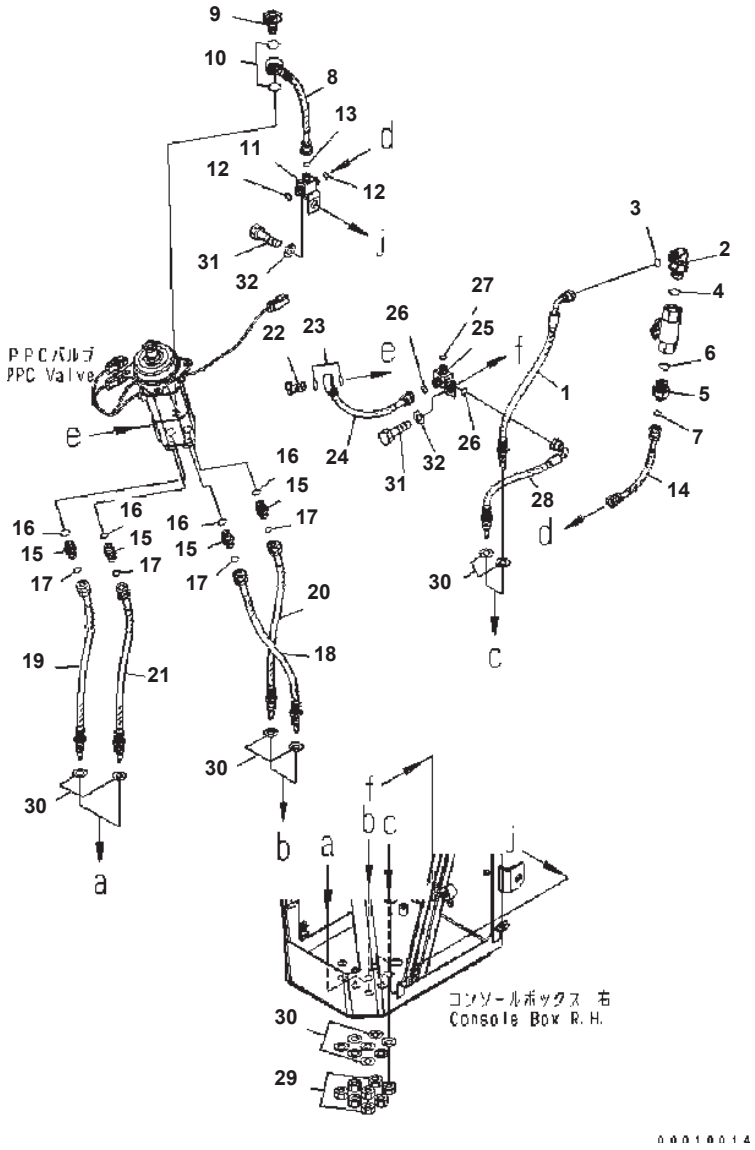

WA320-5 S/N B10001-UP

FLOOR (LOADER CONTROL) (2/2) (HOSE) (FOR MONO LEVER) (#B10229-)

Item	Part No.	Description	Qty	Options
1	419-43-38130	HOSE, 395MM, RED-YELLOW	1	SN:B10229--
2	02782-10315	ELBOW	1	SN:B10229--
3	02896-11009	O-RING	1	SN:B10229--
4	07002-12034	O-RING	1	SN:B10229--
5	02781-00315	UNION	1	SN:B10229--
6	07002-12034	O-RING	1	SN:B10229--
7	02896-11009	O-RING	1	SN:B10229--
8	419-U77-3520	HOSE, 205MM, RED-BLUE	1	SN:B10229--
9	702-16-53240	PLUG	1	SN:B10229--
10	07000-12018	O-RING	2	SN:B10229--
11	419-U77-3671	TEE	1	SN:B10229--
12	02896-11009	O-RING	2	SN:B10229--
13	02896-11008	O-RING	1	SN:B10229--
14	419-U77-3510	HOSE, 185MM, RED-BLUE	1	SN:B10229--
15	21N-64-37130	UNION	4	SN:B10229--
16	07002-11423	O-RING	4	SN:B10229--
17	02896-11009	O-RING	4	SN:B10229--
18	419-43-38240	HOSE, 255MM, RED	1	SN:B10229--
19	419-43-38250	HOSE, 265MM, BLUE	1	SN:B10229--
20	419-43-38260	HOSE, 270MM, YELLOW	1	SN:B10229--
21	419-43-38270	HOSE, 250MM, ORANGE	1	SN:B10229--
22	20Y-62-16170	BOLT	1	SN:B10229--
23	07000-12015	O-RING	2	SN:B10229--
24	419-U77-3550	HOSE, 315MM, BLUE-BLACK	1	SN:B10229--
25	419-U77-3592	TEE	1	SN:B10229--
26	02896-11009	O-RING	2	SN:B10229--
27	02896-11008	O-RING	1	SN:B10229--
28	419-U77-3540	HOSE, 290MM, BLUE-BLACK	1	SN:B10229--
29	01583-11408	NUT	6	SN:B10229--
30	01643-31445	WASHER	12	SN:B10229--
31	01010-81220	BOLT	2	SN:B10229--
32	01643-31232	WASHER	2	SN:B10229--

Ref. K0210-09F5 Page 240280

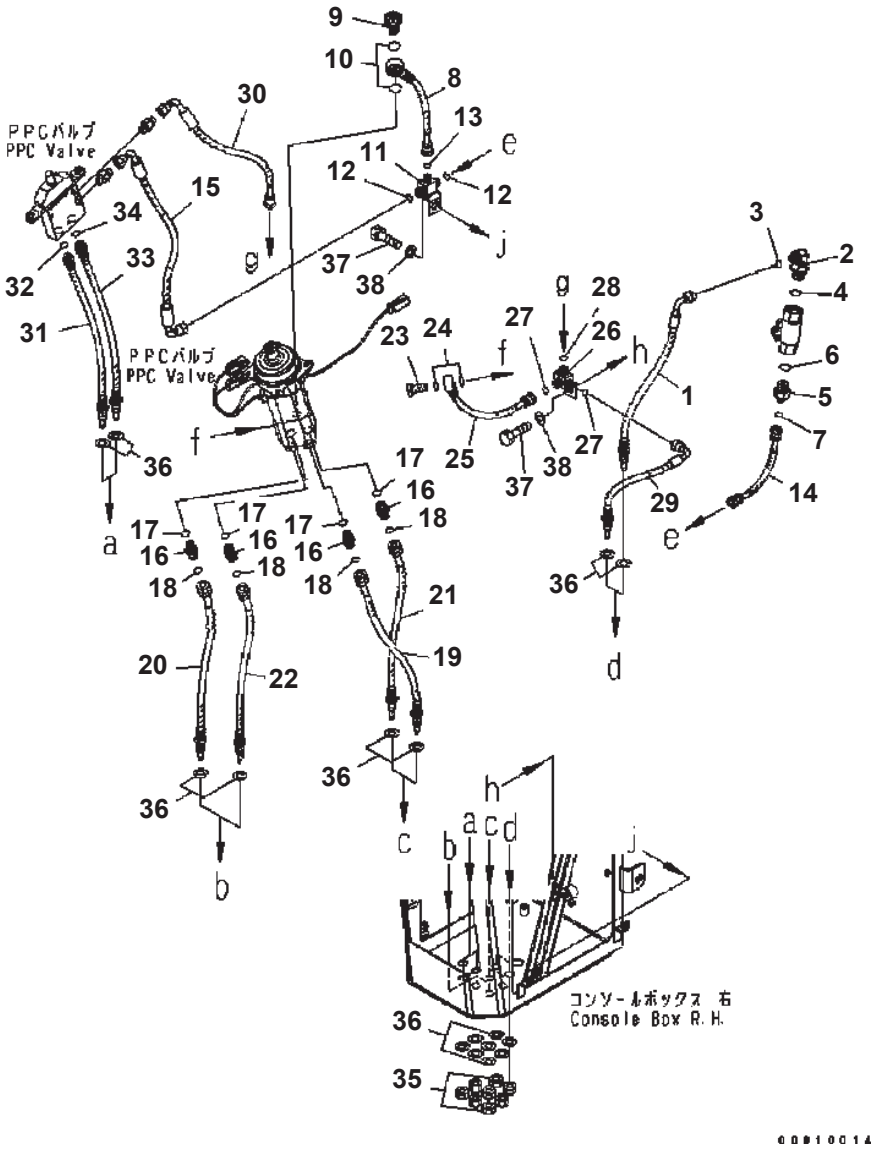

FLOOR (LOADER CONTROL) (2/2) (HOSE) (FOR MONO + 1-ATTACHMENT LEVER) (#B10229-)

Item	Part No.	Description	Qty	Options
1	419-43-38130	HOSE, 395MM, RED-YELLOW	1	SN:B10229--
2	02782-10315	ELBOW	1	SN:B10229--
3	02896-11009	O-RING	1	SN:B10229--
4	07002-12034	O-RING	1	SN:B10229--
5	02781-00315	UNION	1	SN:B10229--
6	07002-12034	O-RING	1	SN:B10229--
7	02896-11009	O-RING	1	SN:B10229--
8	419-U77-3520	HOSE, 205MM, RED-BLUE	1	SN:B10229--
9	702-16-53240	PLUG	1	SN:B10229--
10	07000-12018	O-RING	2	SN:B10229--
11	419-U77-3671	TEE	1	SN:B10229--
12	02896-11009	O-RING	2	SN:B10229--
13	02896-11008	O-RING	1	SN:B10229--
14	419-U77-3510	HOSE, 185MM, RED-BLUE	1	SN:B10229--
15	419-U77-3532	HOSE, 450MM, RED-BLUE	1	SN:B10229--
16	21N-64-37130	UNION	4	SN:B10229--
17	07002-11423	O-RING	4	SN:B10229--
18	02896-11009	O-RING	4	SN:B10229--
19	419-43-38240	HOSE, 255MM, RED	1	SN:B10229--
20	419-43-38250	HOSE, 265MM, BLUE	1	SN:B10229--
21	419-43-38260	HOSE, 270MM, YELLOW	1	SN:B10229--
22	419-43-38270	HOSE, 250MM, ORANGE	1	SN:B10229--
23	20Y-62-16170	BOLT	1	SN:B10229--
24	07000-12015	O-RING	2	SN:B10229--
25	419-U77-3550	HOSE, 315MM, BLUE-BLACK	1	SN:B10229--
26	419-U77-3592	TEE	1	SN:B10229--
27	02896-11009	O-RING	2	SN:B10229--
28	02896-11008	O-RING	1	SN:B10229--
29	419-U77-3540	HOSE, 290MM, BLUE-BLACK	1	SN:B10229--
30	418-U77-3560	HOSE, 370MM, BLUE-BLACK	1	SN:B10229--
31	419-U77-3570	HOSE, 395MM	1	SN:B10229--
32	07000-12011	O-RING	1	SN:B10229--
33	419-U77-3580	HOSE, 405MM	1	SN:B10229--
34	07000-12011	O-RING	1	SN:B10229--
35	01583-11408	NUT	8	SN:B10229--
36	01643-31445	WASHER	16	SN:B10229--
37	01010-81220	BOLT	2	SN:B10229--
38	01643-31232	WASHER	2	SN:B10229--

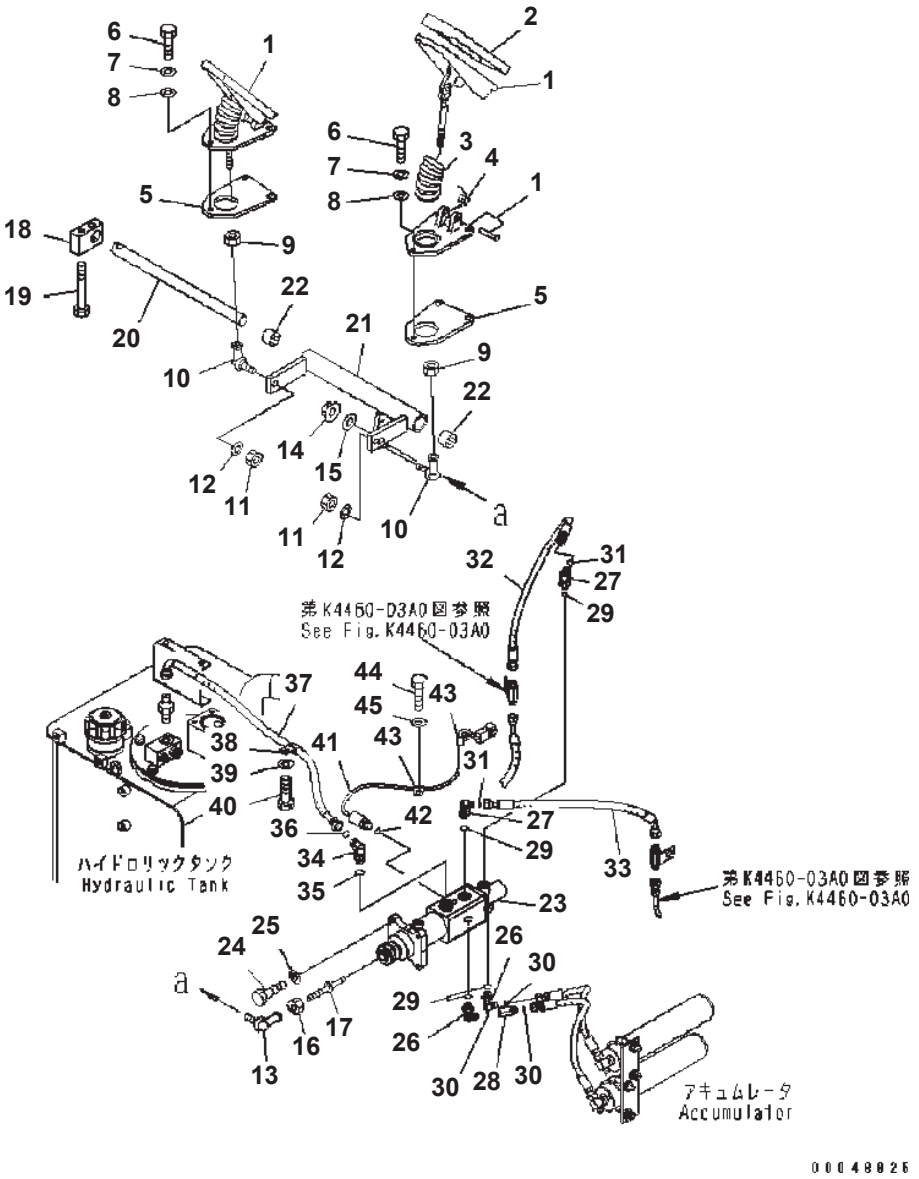

FLOOR (BRAKE CONTROL)

Item	Part No.	Description	Qty	Options
1	418-43-47110	PEDAL	2	SN:B10146--
	□418-43-37111	PEDAL	2	SN:B10001--B10145
2	363-43-37410	· PAD	1	SN:B10001--
3	417-43-27410	· BOOT	1	SN:B10001--
4	417-43-27420	· SPRING	1	SN:B10001--
5	418-43-37410	PLATE	2	SN:B10001--
6	01252-71040	BOLT	6	SN:B10072--
	01252-81035	BOLT	6	SN:B10001--B10071
7	01643-31032	WASHER	6	SN:B10001--
8	01643-71032	WASHER	6	SN:B10001--
9	01582-11210	NUT	2	SN:B10001--
10	04256-41230	JOINT	2	SN:B10001--
11	01595-01210	NUT	2	SN:B10001--
12	01643-31232	WASHER	2	SN:B10001--
13	04256-41230	JOINT	1	SN:B10001--
14	01595-01210	NUT	1	SN:B10001--
15	01643-31232	WASHER	1	SN:B10001--
16	01582-11210	NUT	1	SN:B10001--
17	418-43-37140	ROD	1	SN:B10001--
18	418-43-37130	PLATE	1	SN:B10001--
19	01010-81265	BOLT	2	SN:B10001--
20	417-43-27120	SHAFT	1	SN:B10001--
21	418-43-37120	LEVER	1	SN:B10001--
22	06124-02520	BEARING	2	SN:B10001--
23	419-43-37100	VALVE {BRAKE}	1	SN:B10001--
24	01010-81035	BOLT	4	SN:B10001--
25	01643-31032	WASHER	4	SN:B10001--
26	21W-62-43980	ELBOW	4	SN:B10001--
27	418-T80-3281	ELBOW	2	SN:B10001--
28	419-43-37570	UNION	1	SN:B10001--
29	07000-12011	O-RING	4	SN:B10001--
30	02896-11008	O-RING	3	SN:B10001--
31	02896-11009	O-RING	2	SN:B10001--
32	02767-B0306	HOSE	1	SN:B10001--
33	02767-B03A4	HOSE	1	SN:B10001--
34	56B-88-12320	ELBOW	1	SN:B10001--
35	07000-12014	O-RING	1	SN:B10001--
36	02896-11009	O-RING	1	SN:B10001--
37	419-43-31031	HOSE	1	SN:B10001--
38	04434-51610	CLIP	1	SN:B10001--

WA320-5 S/N B10001-UP

FLOOR (BRAKE CONTROL)

Item	Part No.	Description	Qty	Options
39	01643-31032	WASHER	1	SN:B10001--
40	01010-81020	BOLT	1	SN:B10001--
41	418-43-37230	SWITCH	1	SN:B10001--
42	07002-11423	O-RING	1	SN:B10001--
43	04434-50610	CLIP	2	SN:B10001--
44	01010-31016	BOLT	1	SN:B10001--
45	01643-31032	WASHER	1	SN:B10001--

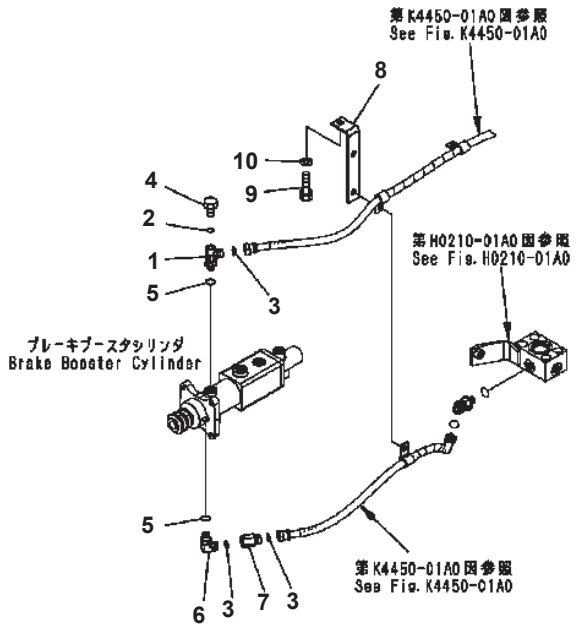

D0007862

FLOOR (INCHING BRAKE)

Item	Part No.	Description	Qty	Options
1	419-18-31331	ELBOW	1	SN:B10001--
2	07002-11023	O-RING	1	SN:B10001--
3	02896-11009	O-RING	3	SN:B10001--
4	07040-11007	PLUG	1	SN:B10001--
5	07000-12011	O-RING	2	SN:B10001--
6	418-T80-3281	ELBOW	1	SN:B10001--
7	419-43-37580	UNION	1	SN:B10001--
8	418-18-31131	BRACKET	1	SN:B10001--
9	01010-81020	BOLT	1	SN:B10001--
10	01643-31032	WASHER	1	SN:B10001--

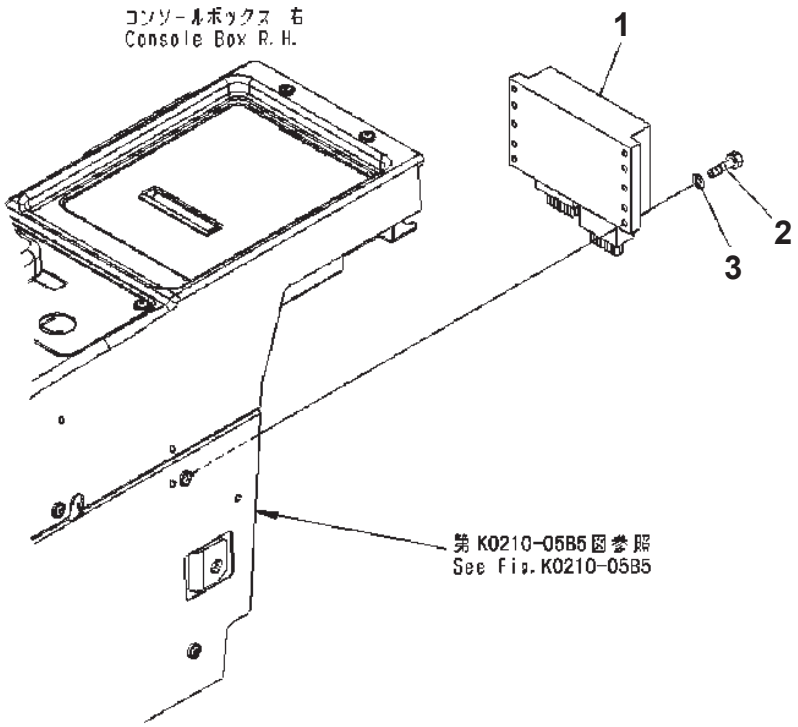

FLOOR (HST CONTROLLER) (#B10001-B10228)

Item	Part No.	Description	Qty	Options
1	419-18-31403	CONTROLLER	1	SN:B10001--B10228
2	01010-80625	BOLT	4	SN:B10001--B10228
3	01643-30623	WASHER	4	SN:B10001--B10228

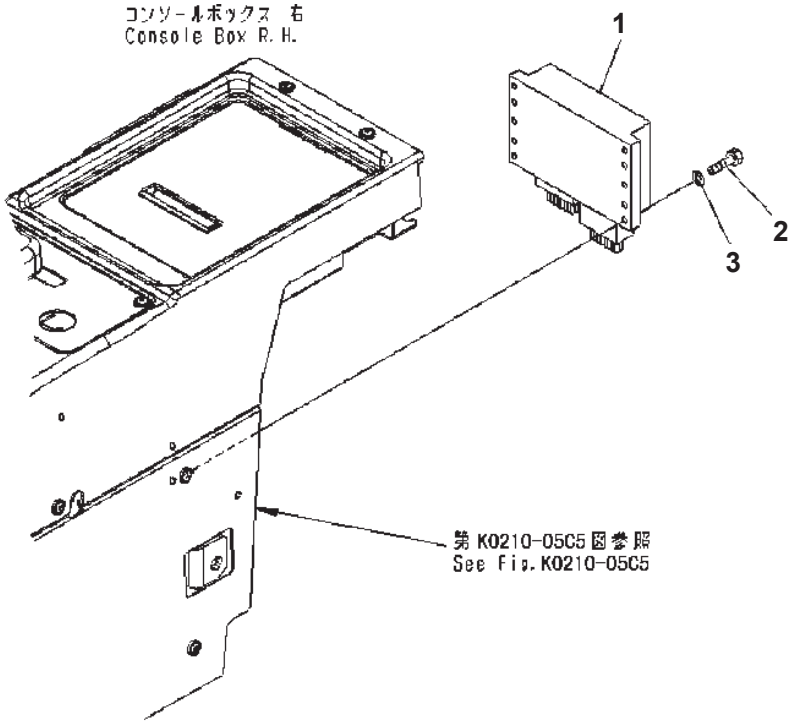

FLOOR (HST CONTROLLER) (#B10229-)

Item	Part No.	Description	Qty	Options
1	419-18-31710	CONTROLLER	1	SN:B10229--
2	01010-80630	BOLT	4	SN:B10229--
3	01643-30623	WASHER	4	SN:B10229--

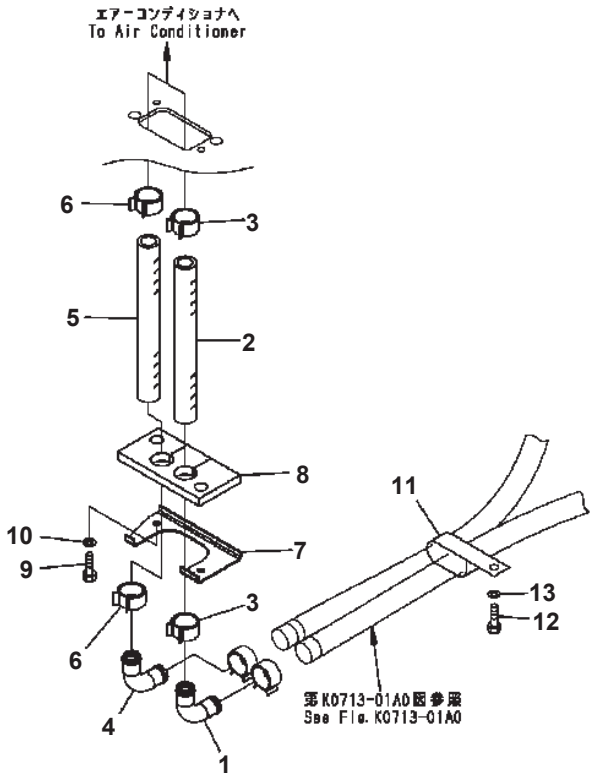

00002660

FLOOR (HEATER PIPING) (#B10001-B10228)

Item	Part No.	Description	Qty	Options
1	416-942-1550	ELBOW	1	SN:B10001--B10228
2	09483-10502	HOSE	1	SN:B10001--B10228
3	09479-02400	CLAMP	2	SN:B10001--B10228
4	416-942-1550	ELBOW	1	SN:B10001--B10228
5	09483-10502	HOSE	1	SN:B10001--B10228
6	09479-02400	CLAMP	2	SN:B10001--B10228
7	418-S62-3350	PLATE	1	SN:B10001--B10228
8	418-07-31150	SHEET	1	SN:B10001--B10228
9	01010-80612	BOLT	2	SN:B10001--B10228
10	01643-30623	WASHER	2	SN:B10001--B10228
11	421-07-11550	CLIP	1	SN:B10001--B10228
12	01010-81020	BOLT	1	SN:B10001--B10228
13	01643-31032	WASHER	1	SN:B10001--B10228

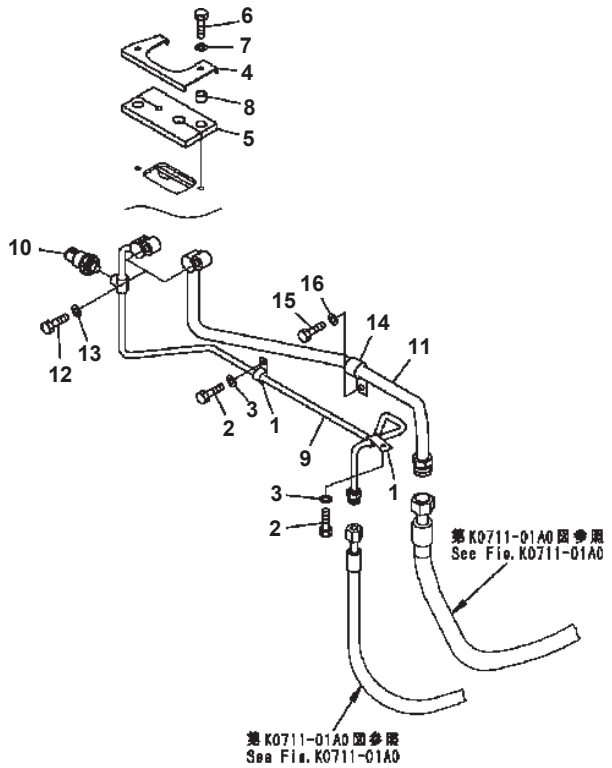

FLOOR (AIR CONDITIONER PIPING)

Item	Part No.	Description	Qty	Options
1	08036-00814	CLIP	2	SN:B10001--
2	01010-81020	BOLT	2	SN:B10001--
3	01643-31032	WASHER	2	SN:B10001--
4	418-S62-3350	PLATE	1	SN:B10001--
5	421-07-23980	SHEET	1	SN:B10001--
6	01010-80630	BOLT	2	SN:B10001--
7	01643-30623	WASHER	2	SN:B10001--
8	421-54-13850	SPACER	2	SN:B10001--
9	418-S62-3211	TUBE	1	SN:B10001--
10	421-07-21810	· SWITCH	1	SN:B10001--
11	418-S62-3221	TUBE	1	SN:B10001--
12	01010-80630	BOLT	2	SN:B10001--
13	01643-30623	WASHER	2	SN:B10001--
14	04434-51610	CLIP	1	SN:B10001--
15	01010-81020	BOLT	1	SN:B10001--
16	01643-31032	WASHER	1	SN:B10001--

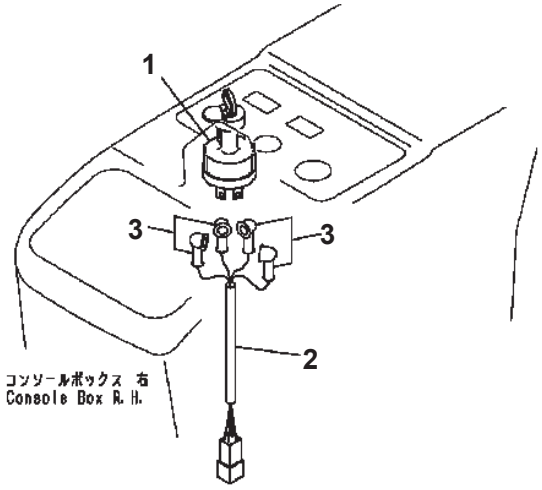

00002684

FLOOR (ELECTRICAL) (STARTING SWITCH)

Item	Part No.	Description	Qty	Options
1	08086-20100	SWITCH	1	SN:B10001--
2	418-06-32111	WIRING HARNESS	1	SN:B10001--
3	08038-00518	CAP	4	SN:B10001--

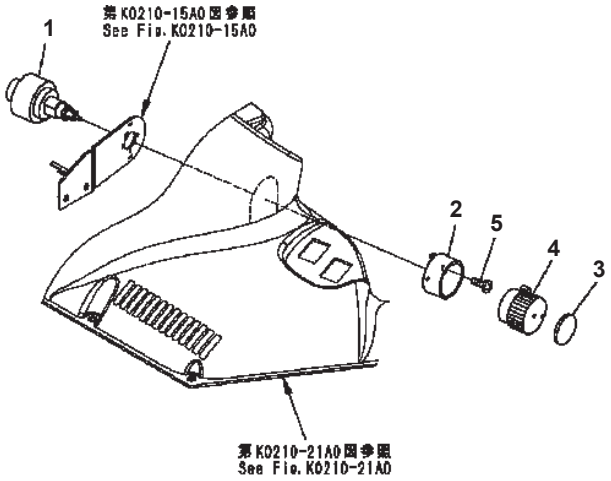

00002662

FLOOR (WIPER SWITCH)

Item	Part No.	Description	Qty	Options
	421-06-26110	SWITCH ASS'Y	1	SN:B10001--
1	421-06-26120	· SWITCH	1	SN:B10001--
2	421-06-26130	· COLLAR	1	SN:B10001--
3	421-06-26140	· CAP	1	SN:B10001--
4	421-06-26150	· KNOB	1	SN:B10001--
5	421-06-26160	SCREW	2	SN:B10001--

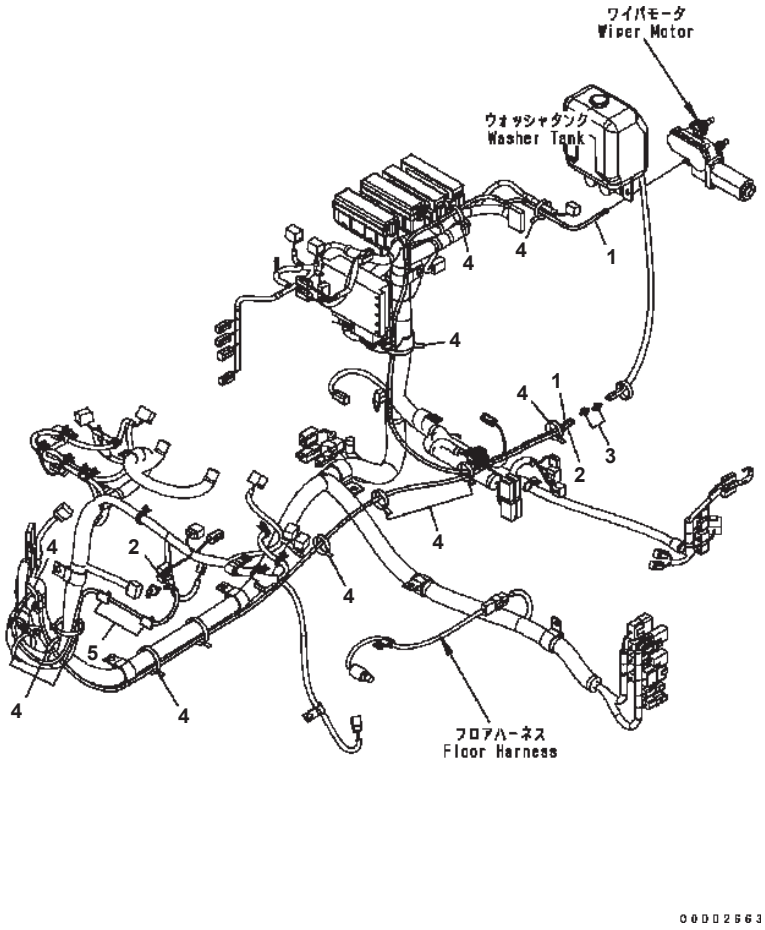

FLOOR (WASHER HOSE) (#B10001-B10228)

Item	Part No.	Description	Qty	Options
1	418-07-36111	HOSE	1	SN:B10001--B10228
2	418-07-36140	HOSE	1	SN:B10001--B10228
3	195-979-8590	VALVE	2	SN:B10018--B10228
	421-07-15110	JOINT	2	SN:B10001--B10017
4	08034-40521	BAND	12	SN:B10001--B10228
5	421-54-15520	CLIP	2	SN:B10001--B10228

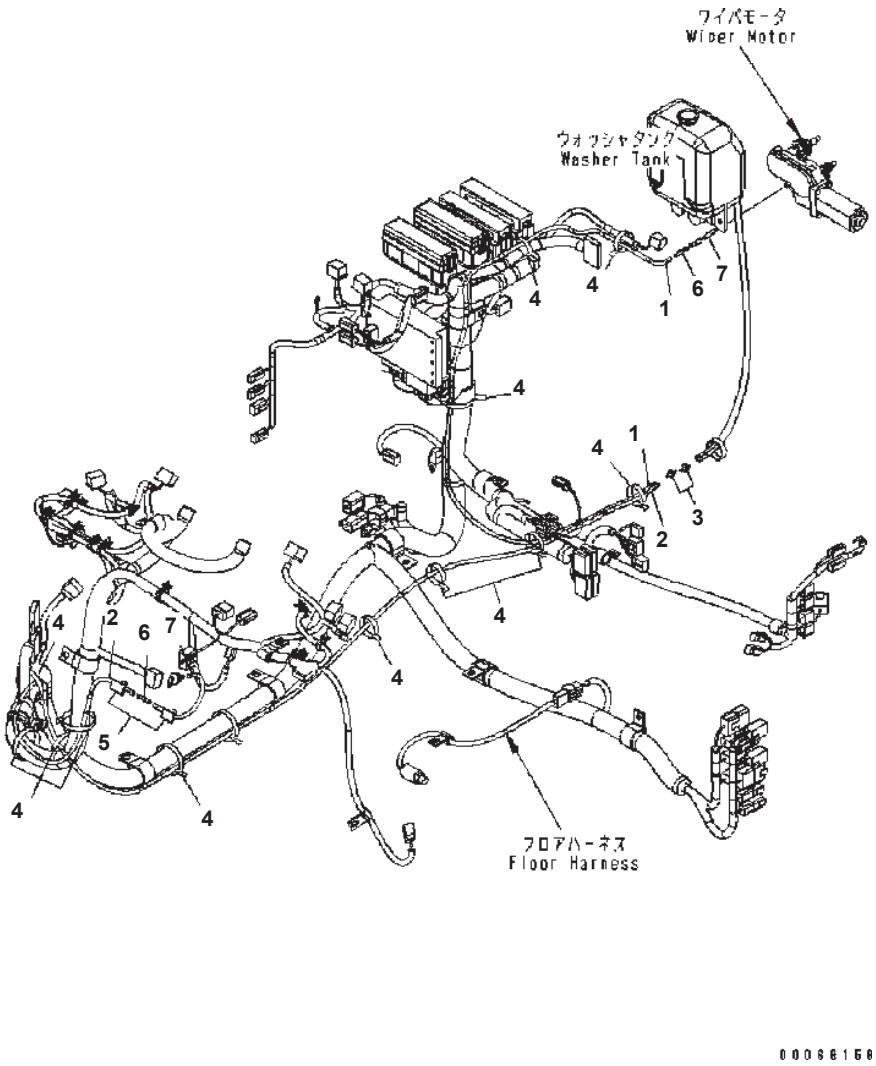

WA320-5 S/N B10001-UP

FLOOR (WASHER HOSE) (#B10229-)

Item	Part No.	Description	Qty	Options
1	418-07-36160	HOSE, 2550MM	1	SN:B10229--
2	418-07-36170	HOSE, 1450MM	1	SN:B10229--
3	421-07-15110	JOINT	2	SN:B10229--
4	08034-40521	BAND	12	SN:B10229--
5	421-54-15520	CLIP	2	SN:B10229--
6	120-Y79-5760	VALVE	2	SN:B10229--
7	418-923-3610	HOSE, 250MM	2	SN:B10229--

Ref. K0210-18B0 Page 240390

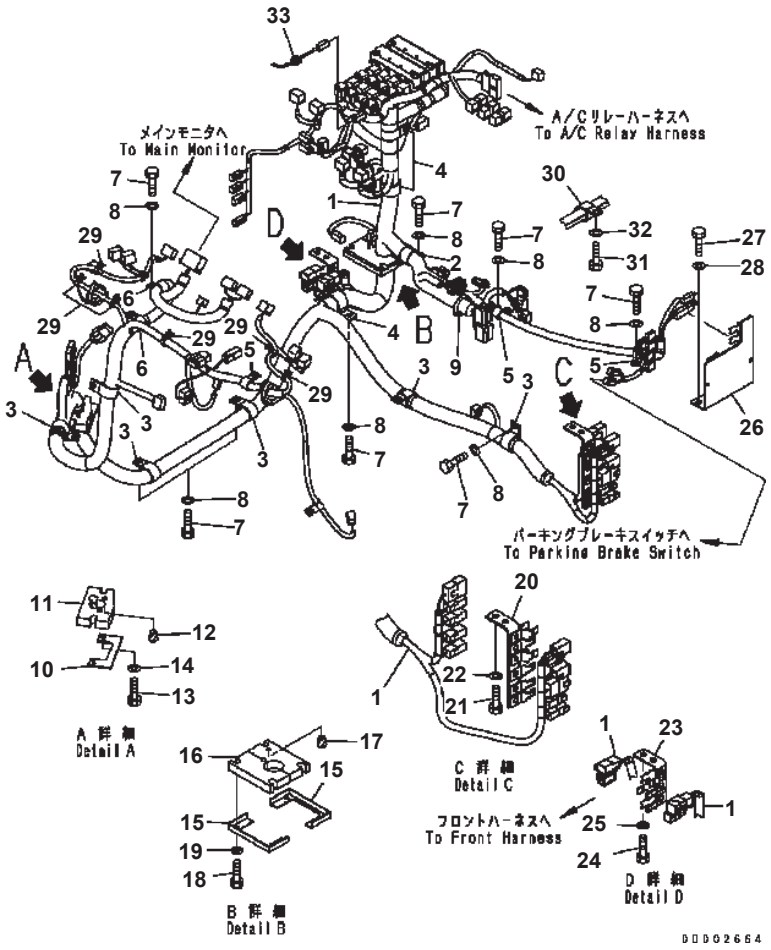

FLOOR (FLOOR HARNESS) (MAIN HARNESS) (#B10001-B10228)

Item	Part No.	Description	Qty	Options
1	418-06-32484	WIRING HARNESS	1	SN:B10042--B10228
	418-06-32483	WIRING HARNESS	1	SN:B10001--B10041
2	04434-53212	CLIP	1	SN:B10001--B10228
3	04434-53412	CLIP	6	SN:B10001--B10228
4	23S-62-25850	CLIP	3	SN:B10001--B10228
5	04434-51912	CLIP	3	SN:B10001--B10228
6	04434-52312	CLIP	2	SN:B10001--B10228
7	01010-81016	BOLT	15	SN:B10001--B10228
8	01643-31032	WASHER	15	SN:B10001--B10228
9	08034-20519	BAND	8	SN:B10001--B10228
10	417-06-22410	PLATE	1	SN:B10001--B10228
11	418-06-32452	SHEET	1	SN:B10001--B10228
12	07049-01012	PLUG	1	SN:B10001--B10228
13	01010-80625	BOLT	2	SN:B10001--B10228
14	01643-30623	WASHER	2	SN:B10001--B10228
15	418-06-31610	PLATE	2	SN:B10001--B10228
16	418-06-31640	SHEET	1	SN:B10001--B10228
17	07049-01012	PLUG	1	SN:B10001--B10228
18	01010-80625	BOLT	4	SN:B10033--B10228
	01010-80612	BOLT	4	SN:B10001--B10032
19	01643-30623	WASHER	4	SN:B10033--B10228
	01643-30623	WASHER	4	SN:B10001--B10032
20	419-06-31333	BRACKET	1	SN:B10001--B10228
21	01010-81016	BOLT	2	SN:B10001--B10228
22	01643-31032	WASHER	2	SN:B10001--B10228
23	419-06-31343	BRACKET	1	SN:B10001--B10228
24	01010-81016	BOLT	2	SN:B10001--B10228
25	01643-31032	WASHER	2	SN:B10001--B10228
26	418-06-31381	BRACKET	1	SN:B10001--B10228
27	01010-81025	BOLT	2	SN:B10001--B10228
28	01643-31032	WASHER	2	SN:B10001--B10228
29	08059-00310	CLIP	20	SN:B10001--B10228
30	04434-53412	CLIP	1	SN:B10001--B10228
31	01010-81020	BOLT	1	SN:B10001--B10228
32	01643-31032	WASHER	1	SN:B10001--B10228
33	417-06-12560	GROMMET	1	SN:B10001--B10228

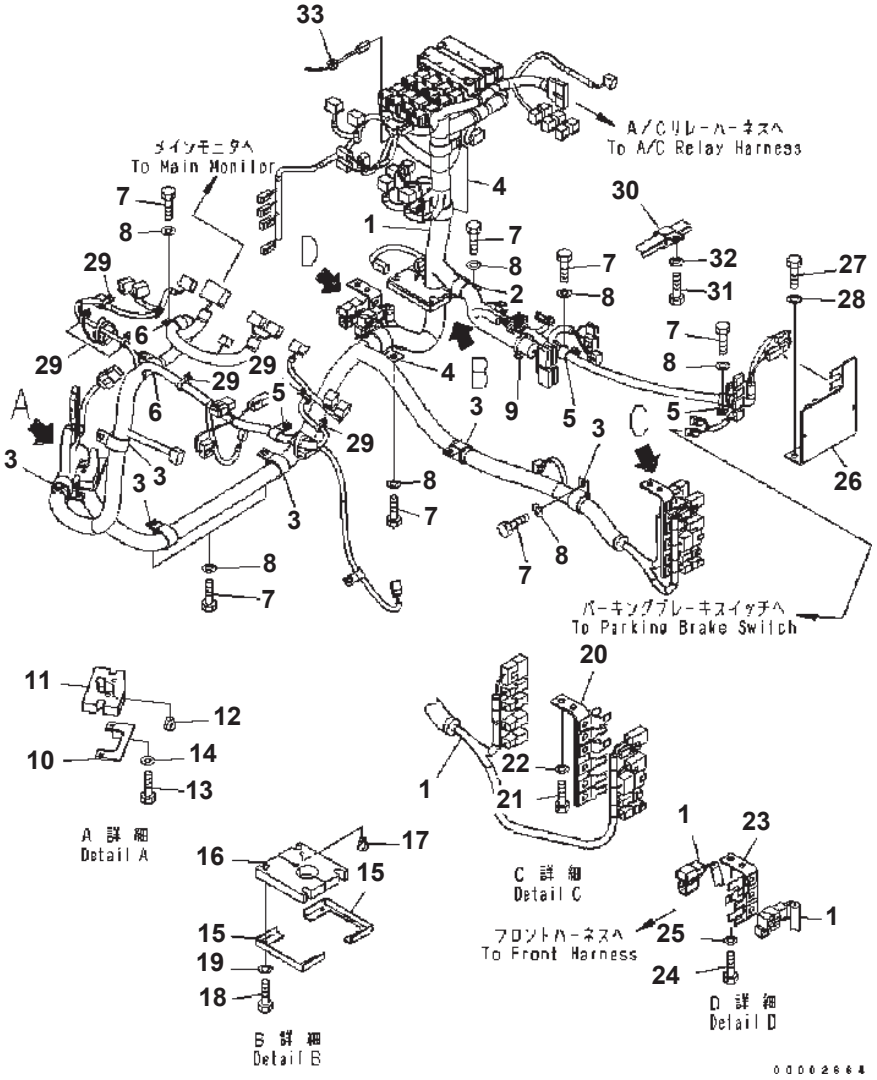

FLOOR (FLOOR HARNESS) (MAIN HARNESS) (#B10229-)

Item	Part No.	Description	Qty	Options
1	418-06-32750	WIRING HARNESS	1	SN:B10229--
2	04434-53212	CLIP	1	SN:B10229--
3	04434-53412	CLIP	6	SN:B10229--
4	23S-62-25850	CLIP	3	SN:B10229--
5	04434-51912	CLIP	3	SN:B10229--
6	04434-52312	CLIP	2	SN:B10229--
7	01010-81016	BOLT	15	SN:B10229--
8	01643-31032	WASHER	15	SN:B10229--
9	08034-20519	BAND	8	SN:B10229--
10	417-06-22410	PLATE	1	SN:B10229--
11	418-06-32452	SHEET	1	SN:B10229--
12	07049-01012	PLUG	1	SN:B10229--
13	01010-80625	BOLT	2	SN:B10229--
14	01643-30623	WASHER	2	SN:B10229--
15	418-06-31610	PLATE	2	SN:B10229--
16	418-06-31640	SHEET	1	SN:B10229--
17	07049-01012	PLUG	1	SN:B10229--
18	01010-80625	BOLT	4	SN:B10229--
19	01643-30623	WASHER	4	SN:B10229--
20	419-06-31333	BRACKET	1	SN:B10229--
21	01010-81016	BOLT	2	SN:B10229--
22	01643-31032	WASHER	2	SN:B10229--
23	419-06-31343	BRACKET	1	SN:B10229--
24	01010-81016	BOLT	2	SN:B10229--
25	01643-31032	WASHER	2	SN:B10229--
26	418-06-31381	BRACKET	1	SN:B10229--
27	01010-81025	BOLT	2	SN:B10229--
28	01643-31032	WASHER	2	SN:B10229--
29	08059-00310	CLIP	20	SN:B10229--
30	04434-53412	CLIP	1	SN:B10229--
31	01010-81020	BOLT	1	SN:B10229--
32	01643-31032	WASHER	1	SN:B10229--
33	417-06-12560	GROMMET	1	SN:B10229--

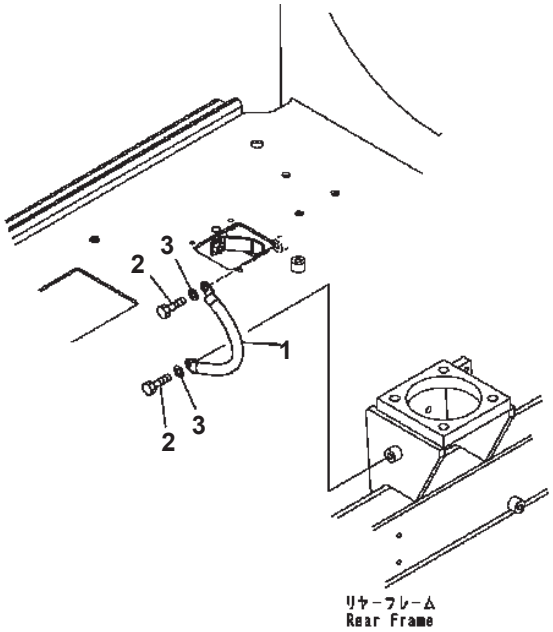

00002665

FLOOR (EARTH)

Item	Part No.	Description	Qty	Options
1	08028-AB030	CABLE	1	SN:B10001--
2	01010-81016	BOLT	2	SN:B10001--
3	01643-31032	WASHER	2	SN:B10001--

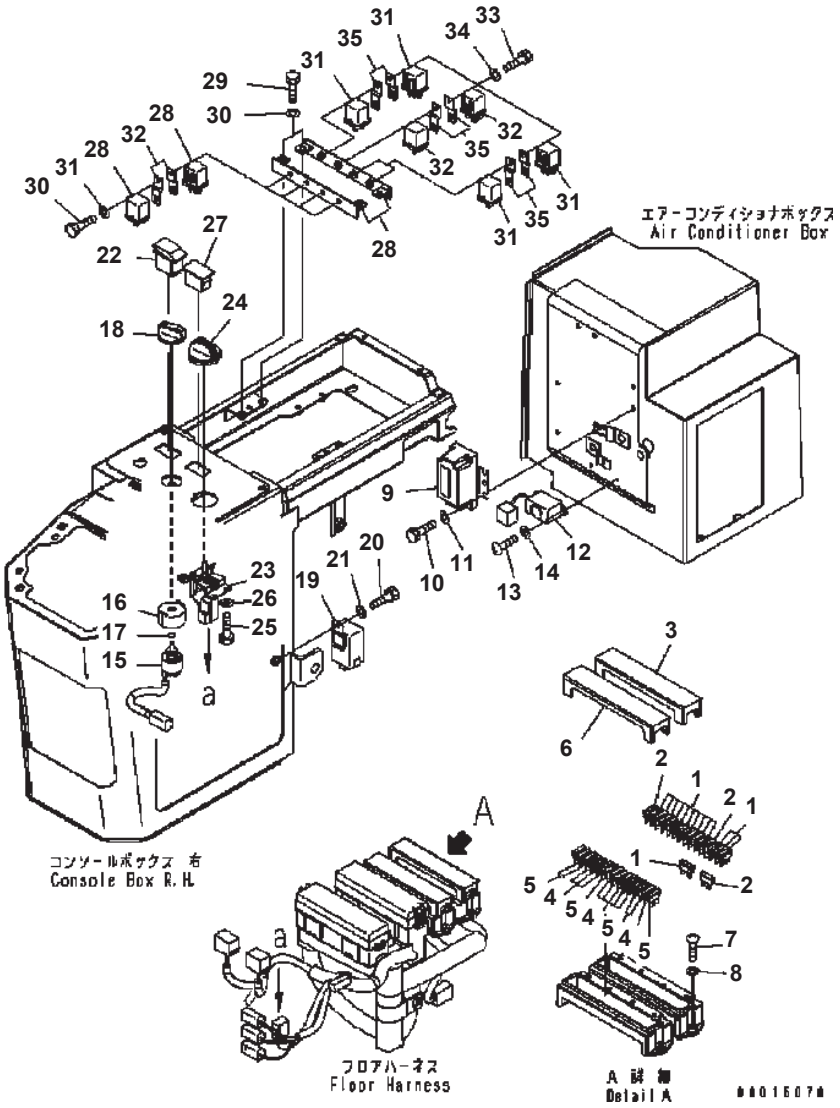

WA320-5 S/N B10001-UP

FLOOR (ELECTRICAL PARTS) (#B10001-B10228)

Item	Part No.	Description	Qty	Options
1	283-06-16190	FUSE¤ 10A	14	SN:B10001--B10228
2	22W-06-13160	FUSE¤ 20A	3	SN:B10001--B10228
3	283-06-16120	COVER	1	SN:B10001--B10228
4	283-06-16190	FUSE¤ 10A	9	SN:B10001--B10228
5	22W-06-13160	FUSE¤ 20A	6	SN:B10001--B10228
6	283-06-16120	COVER	1	SN:B10001--B10228
7	01220-40520	SCREW	4	SN:B10001--B10228
8	01641-20508	WASHER	4	SN:B10001--B10228
9	421-06-26220	RELAY	1	SN:B10001--B10228
10	01010-80610	BOLT	2	SN:B10001--B10228
11	01643-30623	WASHER	2	SN:B10001--B10228
12	23S-05-35320	BUZZER	1	SN:B10001--B10228
13	01220-40412	SCREW	2	SN:B10001--B10228
14	01641-20405	WASHER	2	SN:B10001--B10228
15	421-06-36232	SWITCH {SPEED RANGE SELECTOR}	1	SN:B10146--B10228
	□421-06-36231	SWITCH {SPEED RANGE SELECTOR}	1	SN:B10001--B10145
16	416-54-32770	COVER	1	SN:B10214--B10228
17	416-54-32790	O-RING	1	SN:B10214--B10228
18	421-06-36241	KNOB	1	SN:B10001--B10228
19	416-06-22250	FLASHER	1	SN:B10001--B10228
20	01010-80612	BOLT	2	SN:B10001--B10228
21	01643-30623	WASHER	2	SN:B10001--B10228
22	418-06-36370	SWITCH {TRACTION CONTROL}	1	SN:B10001--B10228
23	22U-06-22420	POTENTIOMETER ASS'Y	1	SN:B10001--B10228
24	22U-06-22470	KNOB	1	SN:B10001--B10228
25	01010-80612	BOLT	2	SN:B10001--B10228
26	01643-30623	WASHER	2	SN:B10001--B10228
27	418-06-36230	PLUG	2	SN:B10001--B10228
28	418-54-32990	BRACKET	2	SN:B10001--B10228
29	01010-80616	BOLT	4	SN:B10001--B10228
30	01643-30623	WASHER	4	SN:B10001--B10228
31	569-06-61960	RELAY	15	SN:B10001--B10228
32	569-06-61970	RELAY	1	SN:B10001--B10228
33	01010-80616	BOLT	8	SN:B10001--B10228
34	01643-30623	WASHER	8	SN:B10001--B10228
35	287-06-16420	BRACKET	16	SN:B10001--B10228

Ref. K0210-21A5 Page 240430

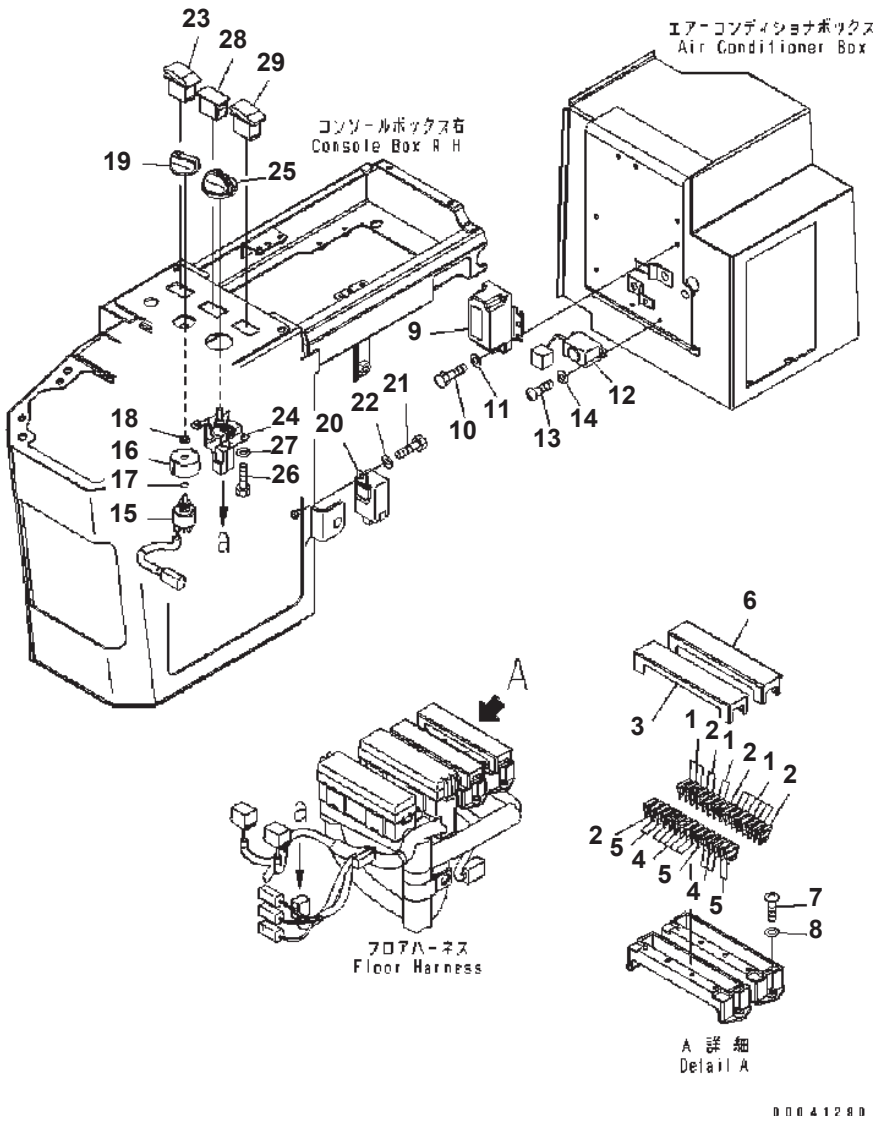

FLOOR (ELECTRICAL PARTS) (#B10229-)

Item	Part No.	Description	Qty	Options
1	283-06-16190	FUSE, 10A	14	SN:B10229--
2	22W-06-13160	FUSE, 20A	3	SN:B10229--
3	283-06-16120	COVER	1	SN:B10229--
4	283-06-16190	FUSE, 10A	9	SN:B10229--
5	22W-06-13160	FUSE, 20A	6	SN:B10229--
6	283-06-16120	COVER	1	SN:B10229--
7	01220-40520	SCREW	4	SN:B10229--
8	01641-20508	WASHER	4	SN:B10229--
9	421-06-26220	RELAY	1	SN:B10229--
10	01010-80610	BOLT	2	SN:B10229--
11	01643-30623	WASHER	2	SN:B10229--
12	23S-05-35320	BUZZER	1	SN:B10229--
13	01220-40412	SCREW	2	SN:B10229--
14	01641-20405	WASHER	2	SN:B10229--
15	421-06-36232	SWITCH	1	SN:B10229--
16	416-54-32770	COVER	1	SN:B10229--
17	416-54-32790	O-RING	1	SN:B10229--
18	195-979-7290	COLLAR	1	SN:B10229--
19	421-06-36241	KNOB	1	SN:B10229--
20	416-06-22250	FLASHER	1	SN:B10229--
21	01010-80612	BOLT	2	SN:B10229--
22	01643-30623	WASHER	2	SN:B10229--
23	418-06-36370	SWITCH, TRACTION CONTROL	1	SN:B10229--
24	22U-06-22420	POTENTIOMETER ASS'Y	1	SN:B10229--
25	22U-06-22470	KNOB	1	SN:B10229--
26	01010-80612	BOLT	2	SN:B10229--
27	01643-30623	WASHER	2	SN:B10229--
28	418-06-36230	PLUG	1	SN:B10229--
29	418-06-36380	SWITCH, MULTI FUNCTION	1	SN:B10229--

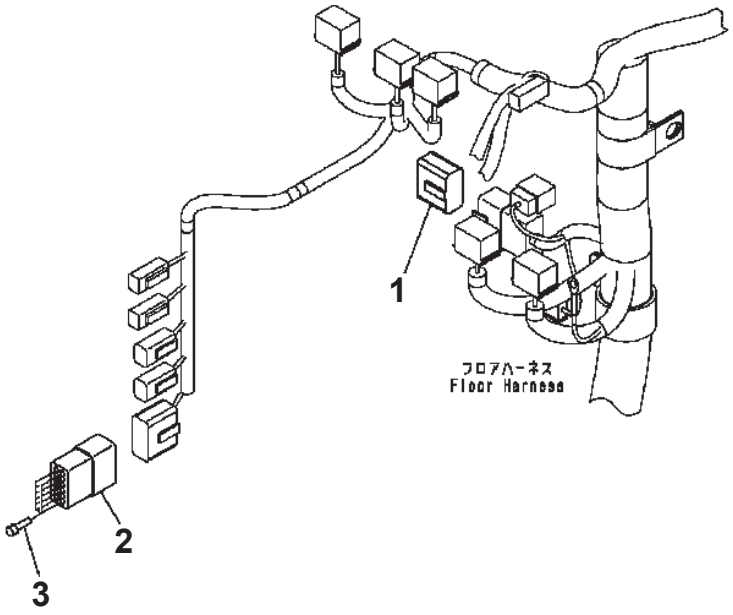

FLOOR (WIRING HARNESS) (PLUG) (#B10001-B10228)

Item	Part No.	Description	Qty	Options
1	418-06-31490	WIRING HARNESS	1	SN:B10001--B10228
2	421-06-31510	CONNECTOR	1	SN:B10001--B10228
3	08191-00770	PLUG	12	SN:B10001--B10228

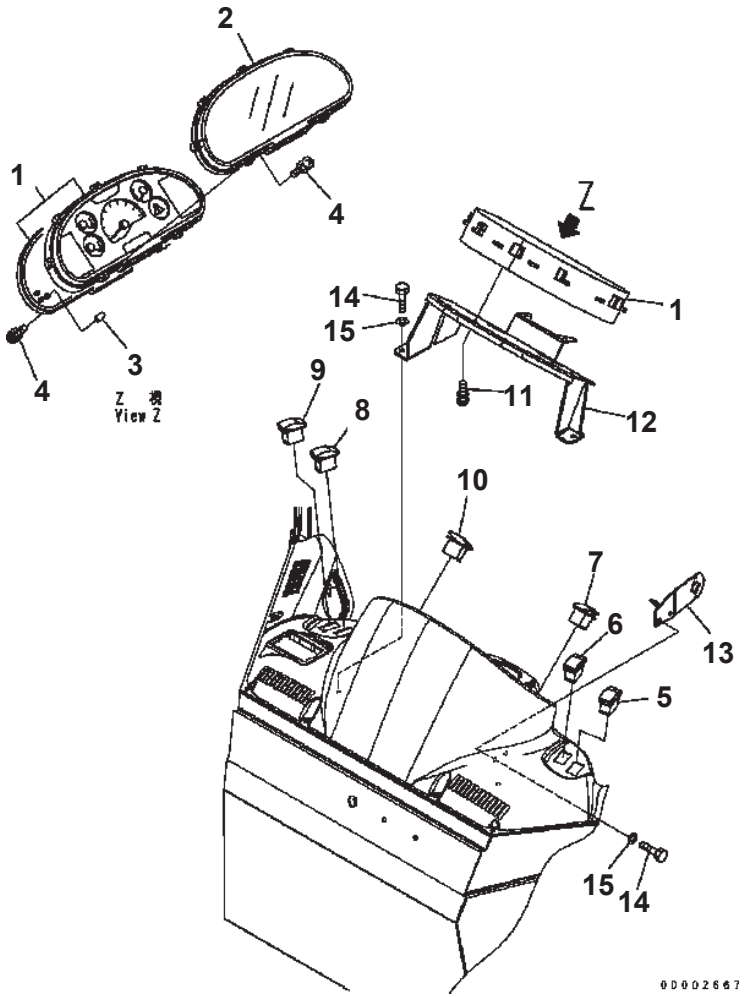

FLOOR (MAIN MONITOR) (#B10001-B10228)

Item	Part No.	Description	Qty	Options
1	418-06-35115	MONITOR	1	SN:B10072--B10228
	□418-06-35114	MONITOR	1	SN:B10001--B10071
2	418-06-35140	· GLASS	1	SN:B10001--B10228
3	418-06-35150	· VALVE	20	SN:B10001--B10228
4	418-06-35160	· SCREW	14	SN:B10001--B10228
5	418-06-36310	SWITCH, FRONT WORK LAMP	1	SN:B10001--B10228
6	418-06-36320	SWITCH, REAR WORK LAMP	1	SN:B10001--B10228
7	418-06-36330	SWITCH, HAZARD	1	SN:B10001--B10228
8	418-06-36340	SWITCH, MODE, 1	1	SN:B10001--B10228
9	418-06-36350	SWITCH, MODE, 2	1	SN:B10001--B10228
10	418-06-36230	PLUG	2	SN:B10001--B10228
11	01023-20616	SCREW	6	SN:B10001--B10228
12	418-926-3613	SUPPORT	1	SN:B10001--B10228
13	418-926-3652	BRACKET	1	SN:B10001--B10228
14	01010-80620	BOLT	8	SN:B10001--B10228
15	01643-30623	WASHER	8	SN:B10001--B10228

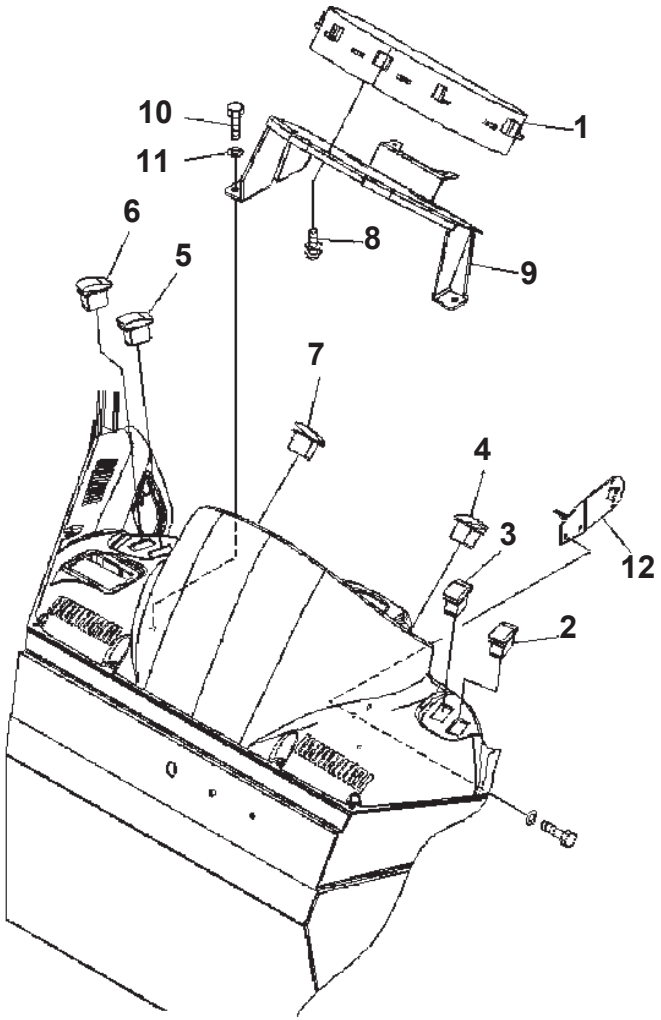

00010008

FLOOR (MAIN MONITOR) (FOR DIGITAL MONITOR) (#B10229-)

Item	Part No.	Description	Qty	Options
1	7823-30-5109	MONITOR, MAIN	1	SN:B11844--
	□7823-30-5108	MONITOR, MAIN	1	SN:B10229--B11843
2	418-06-36310	SWITCH, FRONT WORK LAMP	1	SN:B10229--
3	418-06-36320	SWITCH, REAR WORK LAMP	1	SN:B10229--
4	418-06-36330	SWITCH, HAZARD	1	SN:B10229--
5	418-06-36340	SWITCH, MOIDE, 1	1	SN:B10229--
6	418-06-36350	SWITCH, MODE, 2	1	SN:B10229--
7	418-06-36230	PLUG	2	SN:B10229--
8	01023-10612	SCREW	8	SN:B10415--
	01023-20616	SCREW	6	SN:B10229--B10414
9	419-926-3612	BRACKET	1	SN:B10229--
10	01010-80620	BOLT	5	SN:B10229--
11	01643-30623	WASHER	5	SN:B10229--
12	418-926-3652	BRACKET	1	SN:B10229--

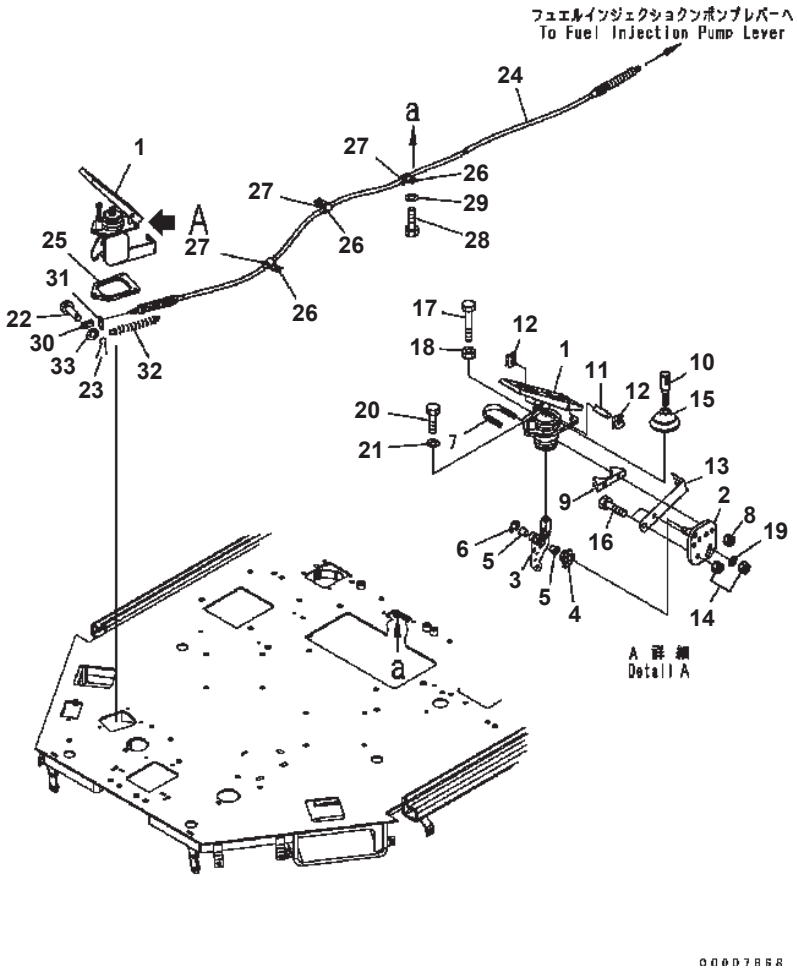

FLOOR (ENGINE CONTROLLER)

Item	Part No.	Description	Qty	Options
	417-43-31120	PEDAL ASS'Y	1	SN:B10001--
1	417-43-11210	· PEDAL AND BODY A.	1	SN:B10001--
2	417-43-11220	· PLATE	1	SN:B10001--
3	417-43-11230	· LEVER	1	SN:B10001--
4	417-43-11240	· SPRING	1	SN:B10001--
5	417-43-11250	· BEARING	2	SN:B10001--
6	417-43-11260	· CLIP	1	SN:B10001--
7	417-43-11270	· U-BOLT	1	SN:B10001--
8	417-43-11280	· NUT	2	SN:B10001--
9	417-43-11290	· SUPPORT	1	SN:B10001--
10	417-43-11310	· ROD	1	SN:B10001--
11	417-43-11320	· PIN	1	SN:B10001--
12	417-43-11330	· CLIP	2	SN:B10001--
13	417-43-11340	· SUPPORT	1	SN:B10001--
14	417-43-11350	· NUT	2	SN:B10001--
15	417-43-11360	· BOOT	1	SN:B10001--
16	01010-80616	· BOLT	2	SN:B10001--
17	01016-50870	· BOLT	1	SN:B10001--
18	01580-10806	· NUT	1	SN:B10001--
19	01643-30623	· WASHER	1	SN:B10001--
20	01010-D0630	BOLT	3	SN:B10001--
21	01643-70623	WASHER	3	SN:B10001--
22	04205-10620	PIN	1	SN:B10001--
23	04050-11612	PIN {COTTER}	1	SN:B10001--
24	419-43-31131	CABLE ASS'Y	1	SN:B10001--
25	421-43-31510	PLATE	1	SN:B10001--
26	04434-52110	CLIP	3	SN:B10001--
27	425-43-11180	GROMMET	3	SN:B10001--
28	01010-81016	BOLT	3	SN:B10001--
29	01643-31032	WASHER	3	SN:B10001--
30	04210-20624	YOKE	1	SN:B10001--
31	424-43-11170	PLATE	1	SN:B10001--
32	418-43-18240	SPRING	1	SN:B10001--
33	01640-20610	WASHER	1	SN:B10001--

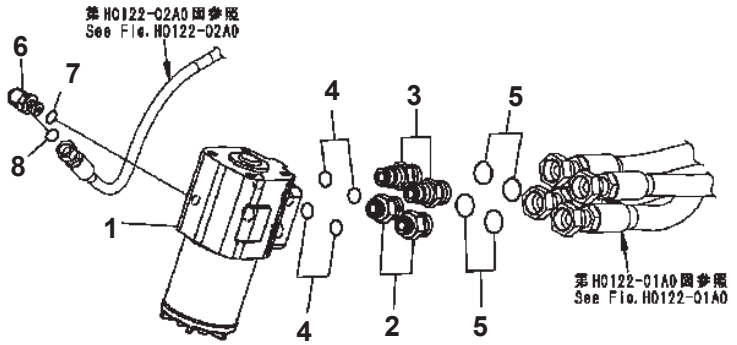

STEERING DEMAND VALVE

Item	Part No.	Description	Qty	Options
1	419-64-35103	VALVE ASS'Y {ORBITROL}	1	SN:B10313--
	419-64-35102	VALVE ASS'Y {ORBITROL}	1	SN:B10001--B10312
2	418-62-31412	NIPPLE	2	SN:B10001--
3	418-62-31421	NIPPLE	2	SN:B10001--
4	415-62-11560	O-RING	4	SN:B10001--
5	02896-11015	O-RING	4	SN:B10001--
6	419-62-41270	ELBOW	1	SN:B10317--
	56B-61-13650	ELBOW	1	SN:B10001--B10316
7	416-62-11480	O-RING	1	SN:B10001--
8	02896-11009	O-RING	1	SN:B10001--

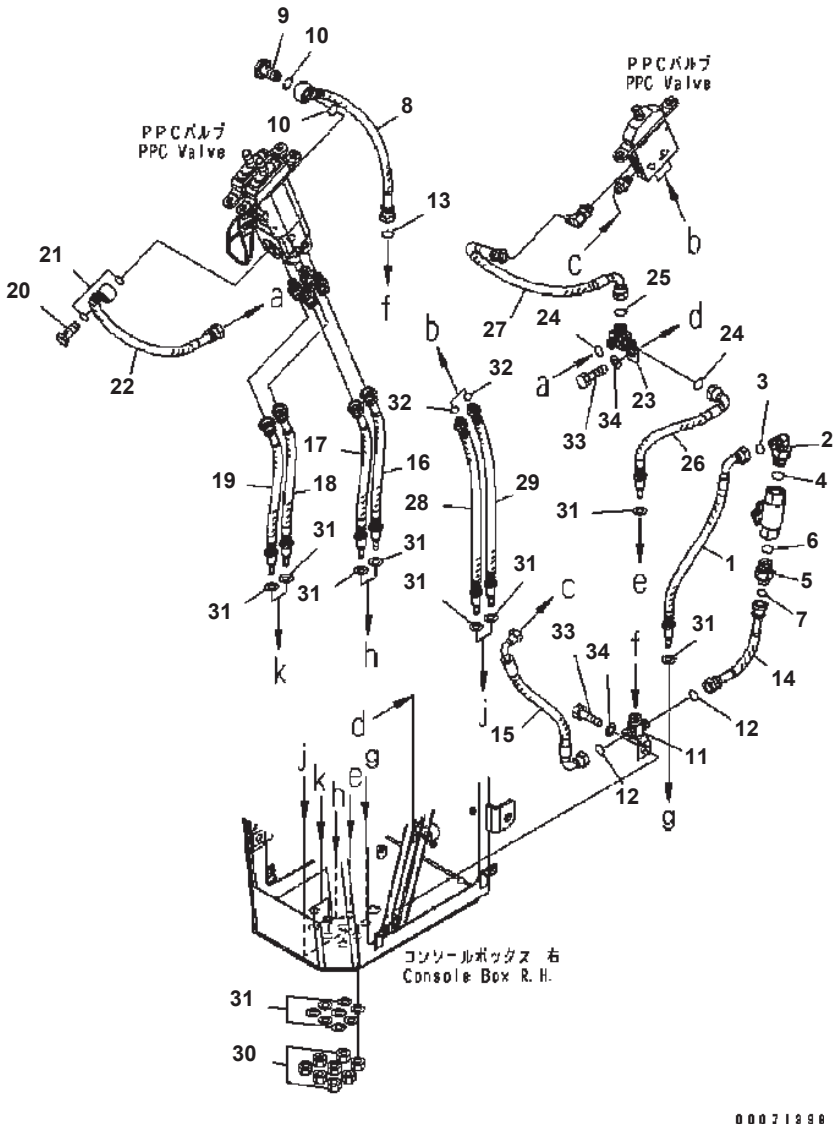

FLOOR (LOADER CONTROL) (2/2) (HOSE) (FOR DIGITAL MONITOR AND 3 LEVER)

Item	Part No.	Description	Qty	Options
1	419-43-38130	HOSE, RED-YELLOW	1	SN:B10001--
2	02782-10315	ELBOW	1	SN:B10001--
3	02896-11009	O-RING	1	SN:B10001--
4	07002-12034	O-RING	1	SN:B10001--
5	02781-00315	UNION	1	SN:B10001--
6	07002-12034	O-RING	1	SN:B10001--
7	02896-11009	O-RING	1	SN:B10001--
8	419-877-3540	HOSE, RED-BLUE	1	SN:B10001--
9	702-16-53240	PLUG	1	SN:B10001--
10	07000-12018	O-RING	2	SN:B10001--
11	419-U77-3671	TEE	1	SN:B10001--
12	02896-11009	O-RING	2	SN:B10001--
13	02896-11008	O-RING	1	SN:B10001--
14	419-U77-3510	HOSE, RED-BLUE	1	SN:B10001--
15	418-43-38440	HOSE, RED-BLUE	1	SN:B10001--
16	419-43-38340	HOSE, RED	1	SN:B10001--
17	419-43-38350	HOSE, BLUE	1	SN:B10001--
18	419-43-38360	HOSE, YELLOW	1	SN:B10001--
19	419-43-38370	HOSE, ORANGE	1	SN:B10001--
20	20Y-62-16170	BOLT	1	SN:B10001--
21	07000-12015	O-RING	2	SN:B10001--
22	419-877-3560	HOSE, BLUE-BLACK	1	SN:B10001--
23	419-U77-3592	TEE	1	SN:B10001--
24	02896-11009	O-RING	2	SN:B10001--
25	02896-11008	O-RING	1	SN:B10001--
26	419-U77-3540	HOSE, BLUE-BLACK	1	SN:B10001--
27	418-43-38460	HOSE, BLUE-BLACK	1	SN:B10001--
28	419-877-3510	HOSE, GREEN	1	SN:B10001--
29	419-877-3520	HOSE, WHITE-RED	1	SN:B10001--
30	01583-11408	NUT	8	SN:B10001--
31	01643-31445	WASHER	16	SN:B10001--
32	07000-12011	O-RING	2	SN:B10001--
33	01010-81220	BOLT	2	SN:B10001--
34	01643-31232	WASHER	2	SN:B10001--

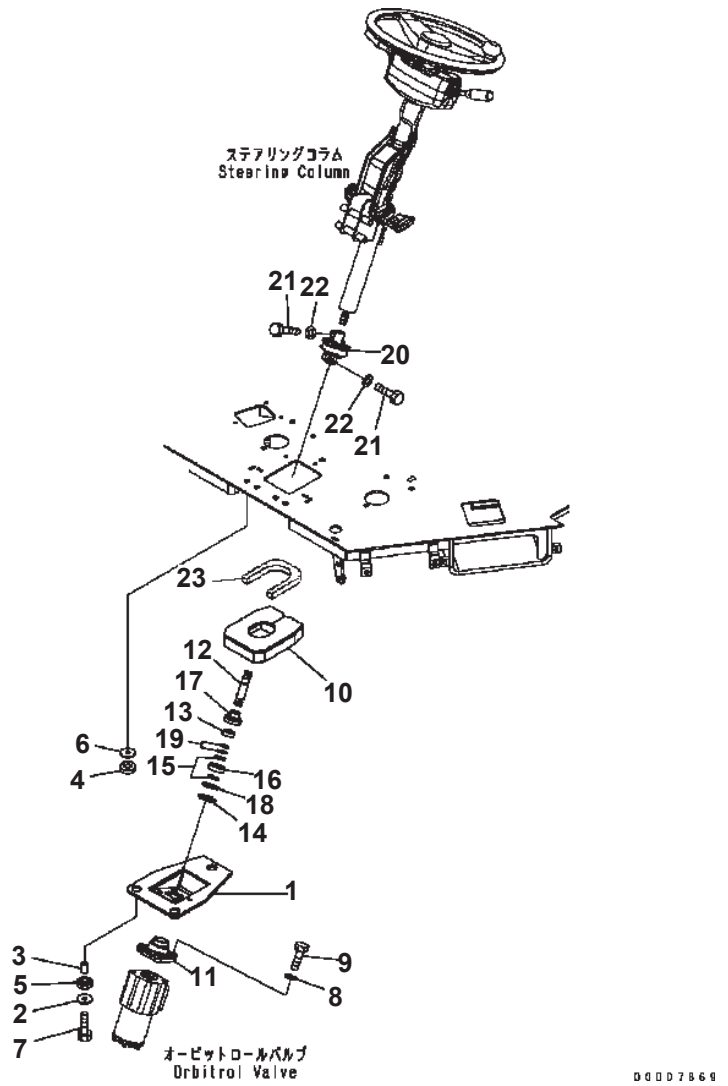

STEERING WHEEL (VALVE MOUNT)

Item	Part No.	Description	Qty	Options
1	419-40-32160	BRACKET	1	SN:B10001--
2	419-43-17920	WASHER	3	SN:B10001--
3	417-62-14130	SPACER	3	SN:B10001--
4	417-62-13620	CUSHION	3	SN:B10001--
5	419-43-17930	CUSHION	3	SN:B10001--
6	419-43-17920	WASHER	3	SN:B10001--
7	01010-81255	BOLT	3	SN:B10001--
8	01010-81040	BOLT	4	SN:B10001--
9	01643-31032	WASHER	4	SN:B10001--
10	419-40-32141	SEAL	1	SN:B10001--
11	417-40-22131	COLUMN ASS'Y	1	SN:B10001--
12	417-40-22171	· SHAFT	1	SN:B10001--
13	417-40-22180	· SEAL	1	SN:B10001--
14	417-40-22190	· RING	1	SN:B10001--
15	417-40-22210	· RING	2	SN:B10001--
16	417-40-22220	· BEARING	1	SN:B10001--
17	417-40-22290	· COVER	1	SN:B10001--
18	417-40-22310	· SHIM	1	SN:B10001--
	417-40-22320	· SHIM	1	SN:B10001--
19	417-40-22330	· SHIM	2	SN:B10001--
	417-40-22340	· SHIM	2	SN:B10001--
	417-40-22350	· SHIM	2	SN:B10001--
	421-40-22450	COUPLING ASS'Y	1	SN:B10001--
20	421-40-22460	· COUPLING	1	SN:B10001--
21	421-40-22470	· BOLT	2	SN:B10001--
22	421-40-22480	· WASHER	2	SN:B10001--
23	419-40-32260	SHEET	1	SN:B10289--

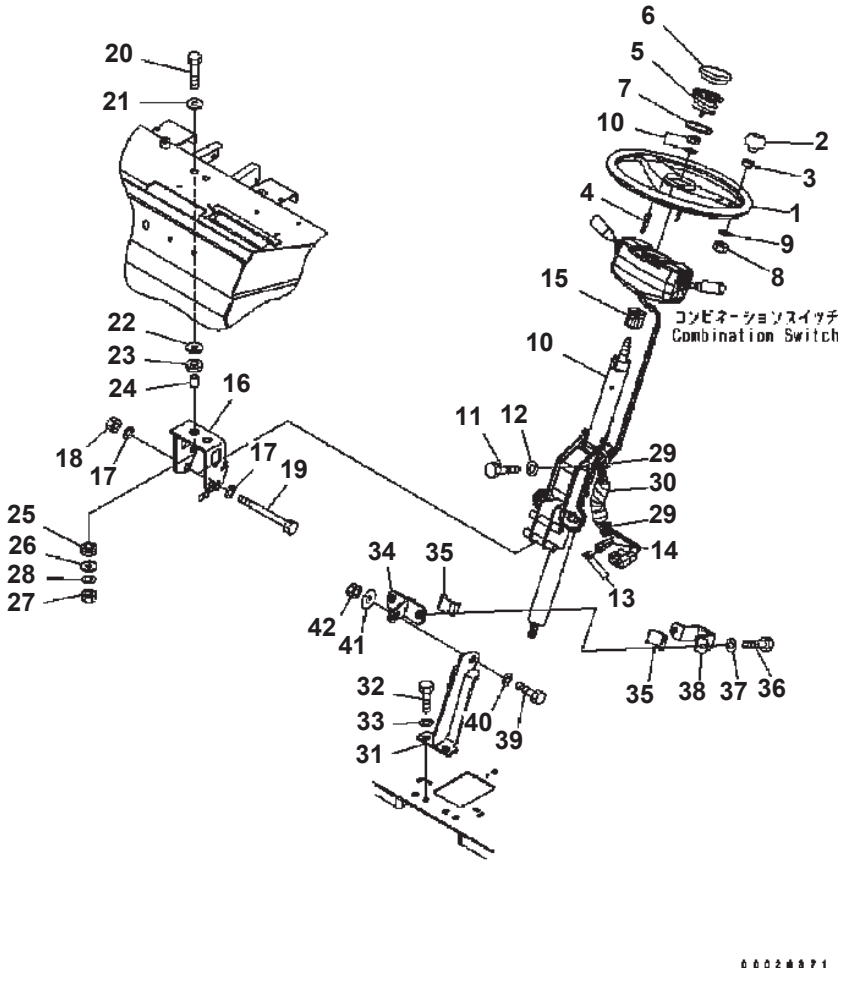

STEERING WHEEL (COLUMN AND ORBITROL) (#B10001-B10208)

Item	Part No.	Description	Qty	Options
	421-40-22110	WHEEL ASS'Y	1	SN:B10001--B10208
1	421-40-22120	· WHEEL	1	SN:B10001--B10208
2	421-40-22140	· KNOB ASS'Y	1	SN:B10001--B10208
3	421-40-22150	· BUSHING	1	SN:B10001--B10208
4	421-40-22160	· PIN	1	SN:B10001--B10208
5	421-40-22170	· CONTACT ASS'Y	1	SN:B10001--B10208
6	421-40-22180	· PAD	1	SN:B10001--B10208
7	421-40-22210	· SPRING LOCK	1	SN:B10001--B10208
8	362-43-15210	· NUT	1	SN:B10001--B10208
9	362-43-15220	· WASHER	1	SN:B10001--B10208
10	419-40-32110	COLUMN ASS'Y	1	SN:B10001--@
11	01050-51030	· BOLT	3	SN:B10001--@
12	01602-21030	· WASHER	3	SN:B10001--@
13	08191-00770	· PLUG	1	SN:B10001--@
14	08192-22830	· CONNECTOR	1	SN:B10001--@
15	418-40-32180	· BUSHING	1	SN:B10001--@
16	418-40-32125	PLATE	1	SN:B10001--@
17	01643-31032	WASHER	4	SN:B10001--@
18	01596-01009	NUT	2	SN:B10001--@
19	01011-81035	BOLT	2	SN:B10001--@
20	01010-81260	BOLT	2	SN:B10001--@
21	419-43-17920	WASHER	2	SN:B10001--@
22	419-43-17920	WASHER	2	SN:B10001--@
23	417-62-13620	CUSHION	2	SN:B10001--@
24	417-62-14130	SPACER	2	SN:B10001--@
25	419-43-17930	CUSHION	2	SN:B10001--@
26	419-43-17920	WASHER	2	SN:B10001--@
27	01580-01210	NUT	2	SN:B10001--@
28	01643-31232	WASHER	2	SN:B10001--@
29	08034-20536	BAND	2	SN:B10001--@
30	08017-30702	CONDUIT	1	SN:B10001--@
31	419-40-32131	BRACKET	1	SN:B10001--@
32	01010-81230	BOLT	2	SN:B10001--@
33	01643-31232	WASHER	2	SN:B10001--@
34	419-40-32152	BRACKET	1	SN:B10001--@
35	419-40-32530	RUBBER	2	SN:B10001--@
36	01010-81025	BOLT	1	SN:B10001--@
37	01643-31032	WASHER	1	SN:B10001--@
38	419-40-32310	BRACKET	1	SN:B10001--@

WA320-5 S/N B10001-UP

STEERING WHEEL (COLUMN AND ORBITROL)

(#B10001-B10208)

Item	Part No.	Description	Qty	Options
39	01010-81230	BOLT	1	SN:B10001--@
40	01643-31232	WASHER	1	SN:B10001--@
41	130-43-64260	COLLAR	1	SN:B10001--@
42	01580-11210	NUT	1	SN:B10001--@

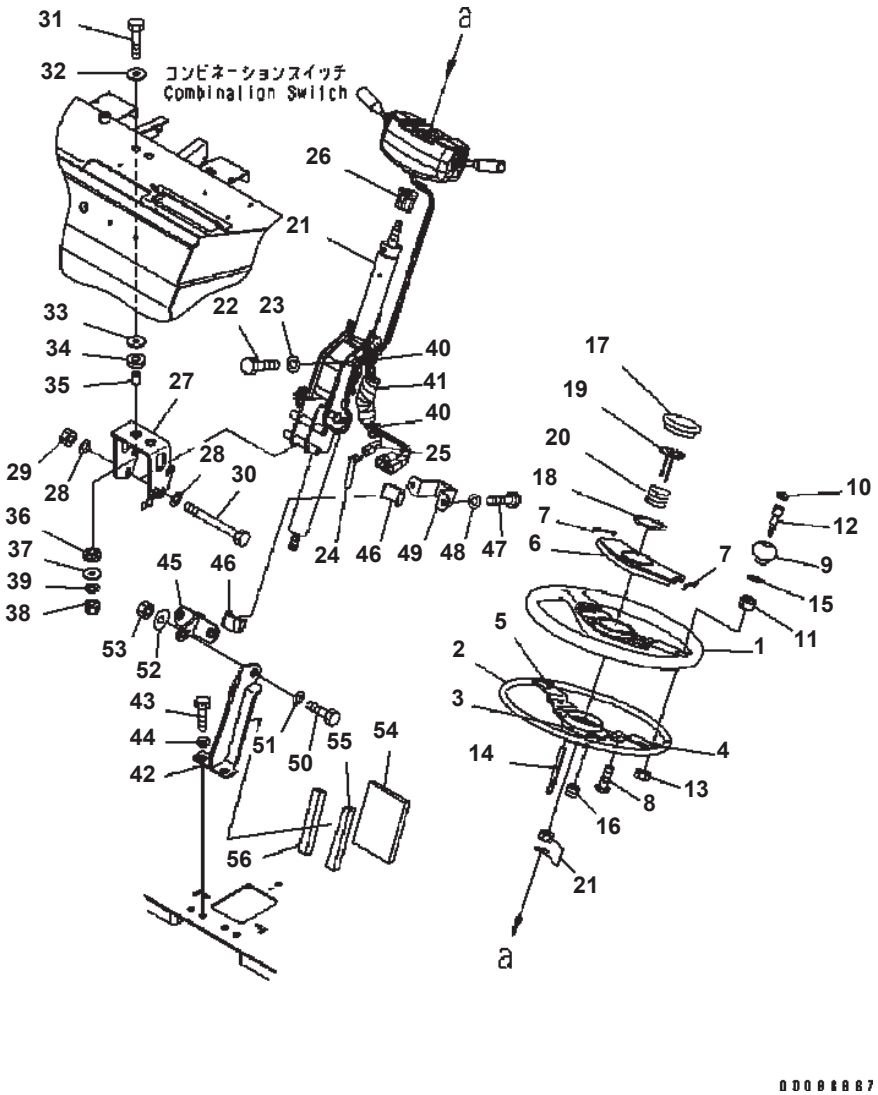

STEERING WHEEL (COLUMN AND ORBITROL) (#B10209-)

Item	Part No.	Description	Qty	Options
	421-40-42211	WHEEL ASS'Y	1	SN:B10546--
	421-40-42210	WHEEL ASS'Y	1	SN:B10209--B10545
	421-40-42220	· WHEEL ASS'Y	1	SN:B10209--
1	421-40-42350	· · WHEEL	1	SN:B10209--
2	421-40-42310	· · · INSERT	1	SN:B10209--
3	421-40-42320	· · · · BOSS	1	SN:B10209--
4	421-40-42330	· · · · PLATE	1	SN:B10209--
5	421-40-42340	· · · · PLATE	1	SN:B10209--
	421-40-42360	· · COVER	1	SN:B10209--
6	421-40-42370	· · · COVER	1	SN:B10209--
7	421-40-42380	· · · SEAL	2	SN:B10209--
8	421-40-42390	· · SCREW	6	SN:B10209--
9	421-40-42410	· · KNOB	1	SN:B10209--
10	421-40-42420	· · CAP	1	SN:B10209--
11	421-40-42430	· · BUSHING	1	SN:B10209--
12	421-40-42440	· · BOLT	1	SN:B10209--
13	421-40-42450	· · NUT	1	SN:B10209--
14	421-40-42460	· · PIN	1	SN:B10209--
15	421-40-42470	· · WASHER	1	SN:B10209--
16	421-40-42480	· · SCREW	3	SN:B10209--
	421-40-42230	· PAD ASS'Y	1	SN:B10209--
17	421-40-42510	· · PAD	1	SN:B10209--
18	421-40-42520	· · SPRING LOCK	1	SN:B10209--
	421-40-42240	· NEEDLE ASS'Y	1	SN:B10209--
19	421-40-42530	· · NEEDLE	1	SN:B10209--
20	421-40-42540	· · SPRING	1	SN:B10209--
21	419-40-32110	COLUMN ASS'Y	1	SN:B10001--
22	01050-51030	· BOLT	3	SN:B10001--
23	01602-21030	· WASHER	3	SN:B10001--
24	08191-00770	· PLUG	1	SN:B10001--
25	08192-22830	· CONNECTOR	1	SN:B10001--
26	418-40-32180	· BUSHING	1	SN:B10001--
27	418-40-32125	PLATE	1	SN:B10001--
28	01643-31032	WASHER	4	SN:B10001--
29	01596-01009	NUT	2	SN:B10001--
30	01011-81035	BOLT	2	SN:B10001--
31	01010-81260	BOLT	2	SN:B10001--
32	419-43-17920	WASHER	2	SN:B10001--
33	419-43-17920	WASHER	2	SN:B10001--

WA320-5 S/N B10001-UP

STEERING WHEEL (COLUMN AND ORBITROL)

(#B10209-)

Item	Part No.	Description	Qty	Options
34	417-62-13620	CUSHION	2	SN:B10001--
35	417-62-14130	SPACER	2	SN:B10001--
36	419-43-17930	CUSHION	2	SN:B10001--
37	419-43-17920	WASHER	2	SN:B10001--
38	01580-01210	NUT	2	SN:B10001--
39	01643-31232	WASHER	2	SN:B10001--
40	08034-20536	BAND	2	SN:B10001--
41	08017-30702	CONDUIT	1	SN:B10001--
42	419-40-32131	BRACKET	1	SN:B10001--
43	01010-81230	BOLT	2	SN:B10001--
44	01643-31232	WASHER	2	SN:B10001--
45	419-40-32152	BRACKET	1	SN:B10001--
46	419-40-32530	RUBBER	2	SN:B10001--
47	01010-81025	BOLT	1	SN:B10001--
48	01643-31032	WASHER	1	SN:B10001--
49	419-40-32310	BRACKET	1	SN:B10001--
50	01010-81230	BOLT	1	SN:B10001--
51	01643-31232	WASHER	1	SN:B10001--
52	130-43-64260	COLLAR	1	SN:B10001--
53	01580-11210	NUT	1	SN:B10001--
54	419-40-32230	SHEET	1	SN:B10289--
55	419-40-32240	SHEET	1	SN:B10289--
56	419-40-32250	SHEET	1	SN:B10289--

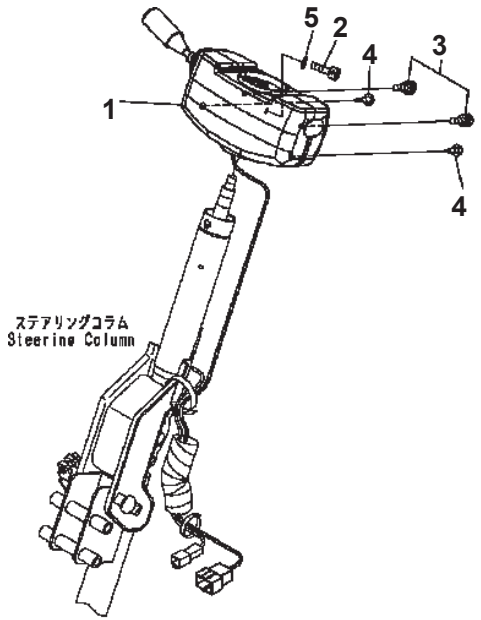

TRANSMISSION CONTROL

Item	Part No.	Description	Qty	Options
1	418-43-36122	SWITCH	1	SN:B10001--
2	3EB-55-32290	BOLT	1	SN:B10001--
3	01023-70512	SCREW	2	SN:B10001--
4	01370-00516	SCREW	2	SN:B10001--
5	01641-20812	WASHER	1	SN:B10001--

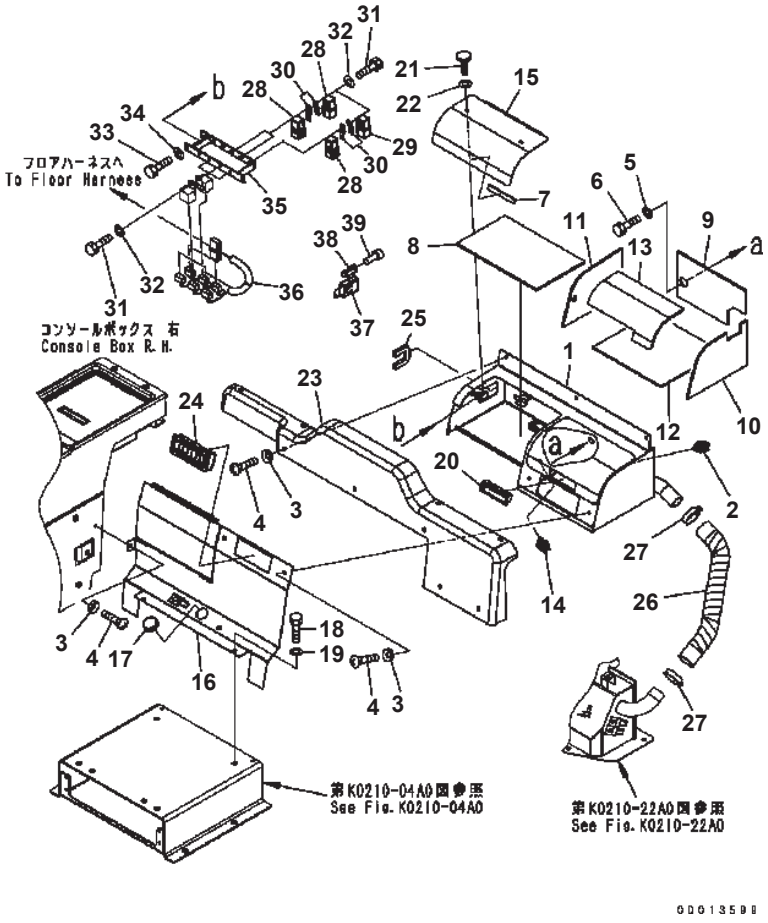

COOL AND HEAT BOX

Item	Part No.	Description	Qty	Options
1	418-54-32323	CONSOLE BOX	1	SN:B10001--
2	23S-55-51530	CLIP	1	SN:B10001--
3	418-926-3490	WASHER	12	SN:B10001--
4	01225-70616	SCREW	12	SN:B10001--
5	01643-31032	WASHER	4	SN:B10001--
6	01010-81020	BOLT	4	SN:B10001--
7	418-54-22190	CUSHION	1	SN:B10001--
8	418-54-32460	INSULATOR	1	SN:B10001--
9	418-54-32352	INSULATOR	1	SN:B10001--
10	418-54-32362	INSULATOR	1	SN:B10001--
11	418-54-32372	INSULATOR	1	SN:B10001--
12	418-54-32381	INSULATOR	1	SN:B10001--
13	418-54-32392	INSULATOR	1	SN:B10001--
14	23S-55-51530	CLIP	1	SN:B10001--
15	418-54-32341	COVER	1	SN:B10001--
16	418-54-32332	COVER	1	SN:B10001--
17	09415-02512	CAP	2	SN:B10001--
18	01010-80616	BOLT	1	SN:B10001--
19	01643-30623	WASHER	1	SN:B10001--
20	421-54-22750	HANDLE	1	SN:B10001--
21	421-09-21260	SCREW	2	SN:B10001--
22	01640-20610	WASHER	2	SN:B10001--
23	418-54-32725	COVER	1	SN:B10001--
24	421-07-23870	GRILLE	1	SN:B10001--
25	421-54-22520	FINISHER	1	SN:B10001--
26	418-07-38130	HOSE	1	SN:B10001--
27	07281-00489	CLAMP	2	SN:B10001--
28	569-06-61960	RELAY	5	SN:B10001--
29	569-06-61970	RELAY	1	SN:B10001--
30	287-06-16420	BRACKET	6	SN:B10001--
31	01010-80616	BOLT	6	SN:B10001--
32	01643-30623	WASHER	6	SN:B10001--
33	01010-80614	BOLT	2	SN:B10001--
34	01643-30623	WASHER	2	SN:B10001--
35	418-54-32931	BRACKET	1	SN:B10001--
36	418-S61-3114	WIRING HARNESS	1	SN:B10001--
37	419-06-31541	WIRING HARNESS	1	SN:B10001--
38	08192-22200	CONNECTOR	1	SN:B10001--
39	08191-00770	PLUG	2	SN:B10001--

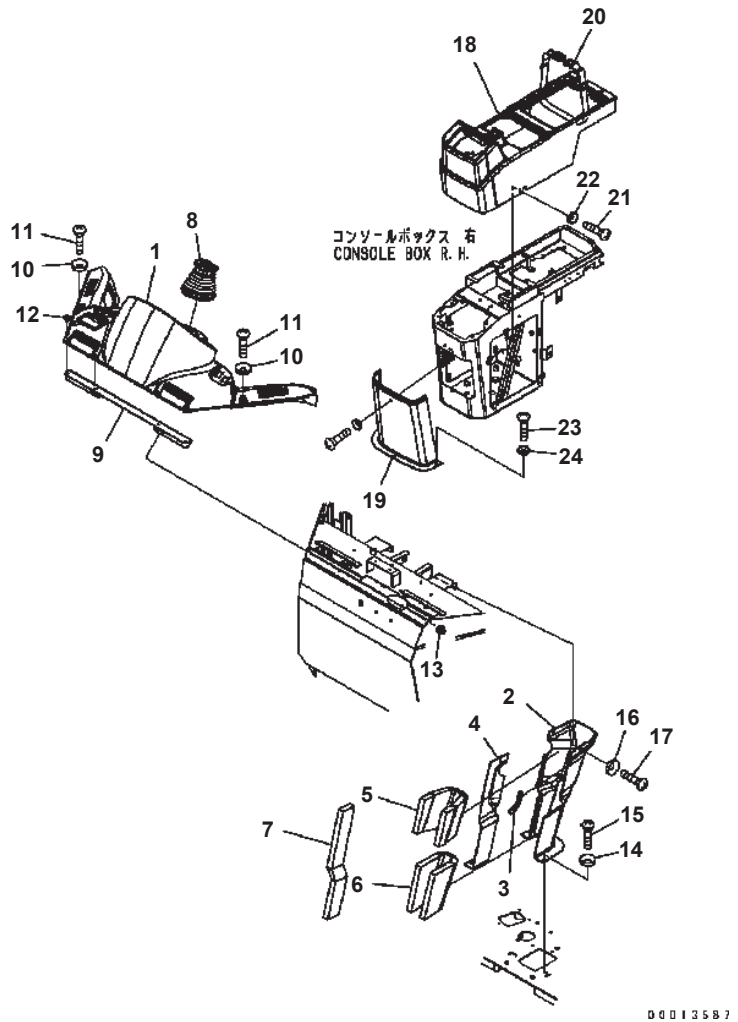

FLOOR (COVER)

Item	Part No.	Description	Qty	Options
1	418-54-32612	COVER	1	SN:B10001--
2	418-54-32644	COVER	1	SN:B10001--
3	421-54-22520	FINISHER	1	SN:B10001--
4	418-54-32653	COVER	1	SN:B10001--
5	418-54-32582	SHEET	1	SN:B10001--
6	418-54-32593	SHEET	1	SN:B10001--
7	418-54-33142	SHEET	1	SN:B10001--
8	418-40-32160	BOOT	1	SN:B10001--
9	418-54-32713	PLATE	1	SN:B10001--
10	418-926-3490	WASHER	8	SN:B10001--
11	01225-70616	SCREW	8	SN:B10001--
12	418-54-32550	RIVET	4	SN:B10001--
13	418-54-32560	KNOB	2	SN:B10001--
14	418-926-3490	WASHER	3	SN:B10001--
15	01225-70616	SCREW	3	SN:B10001--
16	418-926-3490	WASHER	4	SN:B10001--
17	01225-70616	SCREW	4	SN:B10001--
18	419-54-32613	CONSOLE	1	SN:B10001--B10228
19	418-54-32870	COVER	1	SN:B10001--B10228
20	421-54-32790	BAND	1	SN:B10001--B10228
21	01225-70616	SCREW	2	SN:B10001--B10228
22	418-926-3490	WASHER	2	SN:B10001--B10228
23	01225-70616	SCREW	5	SN:B10001--B10228
24	418-926-3490	WASHER	5	SN:B10001--B10228

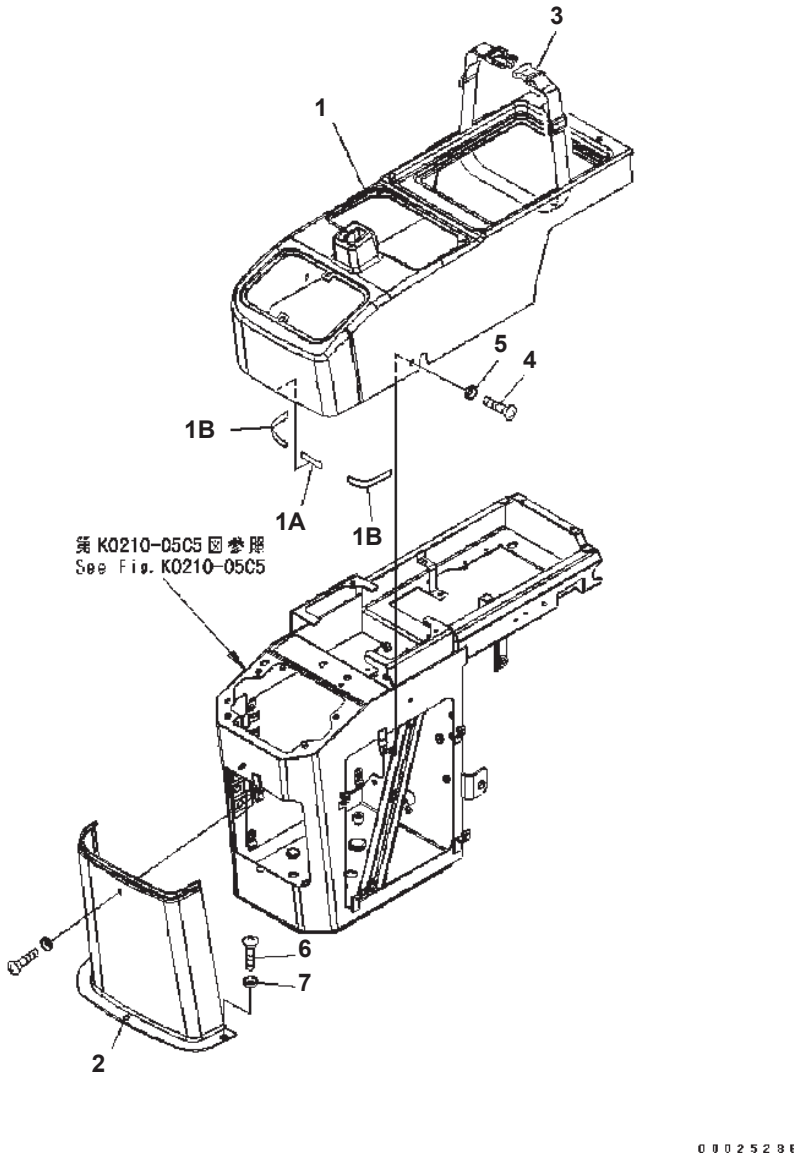

FLOOR (CONSOLE BOX) (R.H.) (COVER) (#B10229-)

Item	Part No.	Description	Qty	Options
1	418-54-32625	COVER	1	SN:B10229--
1A	421-09-12780	CUSHION	1	SN:B10229--
1B	418-54-22190	CUSHION	2	SN:B10229--
2	418-54-32870	COVER	1	SN:B10229--
3	421-54-32790	BAND	1	SN:B10229--
4	01225-70616	SCREW	2	SN:B10229--
5	418-926-3490	WASHER	2	SN:B10229--
6	01225-70616	SCREW	5	SN:B10229--
7	418-926-3490	WASHER	5	SN:B10229--

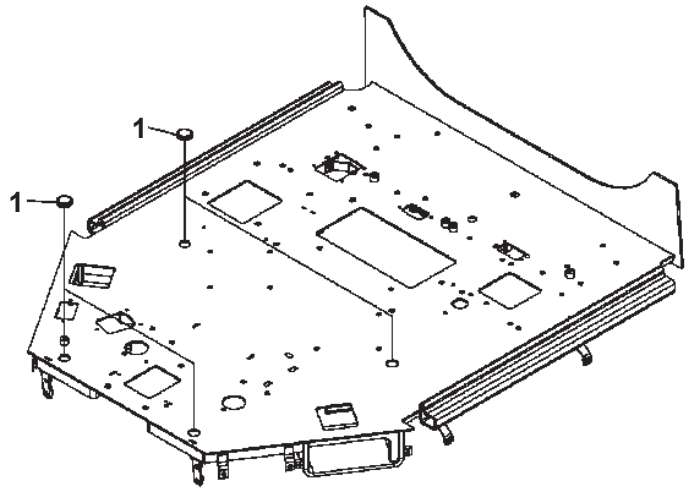

FLOOR (CAP)

Item	Part No.	Description	Qty	Options
1	09415-02512	CAP	4	SN:B10001--

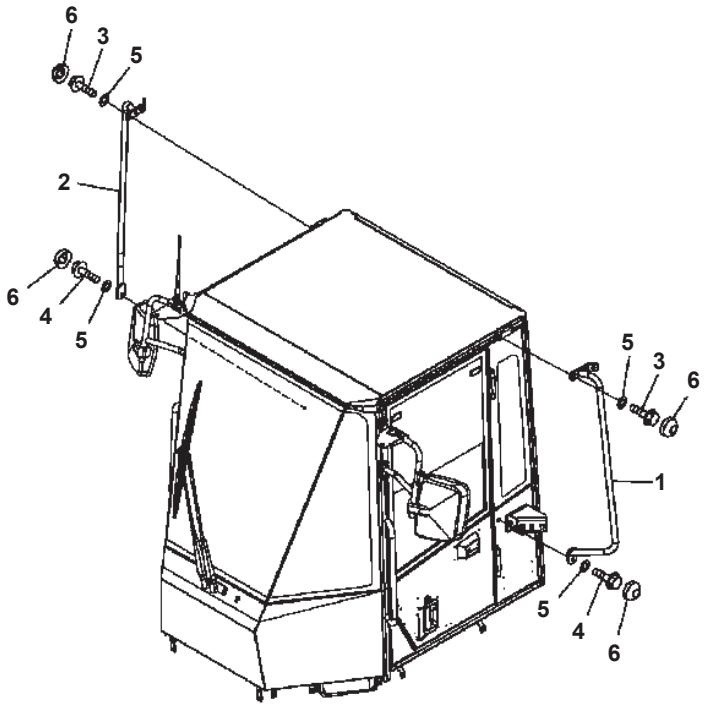

HAND RAIL

Item	Part No.	Description	Qty	Options
1	418-926-3741	HANDRAIL {L.H.}	1	SN:B10001--
2	418-926-3751	HANDRAIL {R.H.}	1	SN:B10001--
3	01435-01025	BOLT	4	SN:B10001--
4	01435-01030	BOLT	2	SN:B10001--
5	01643-31032	WASHER	6	SN:B10001--
6	363-54-31450	CAP	6	SN:B10001--

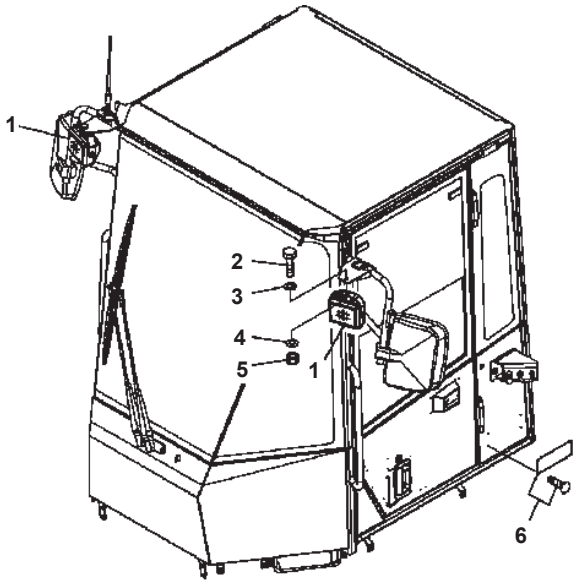

00025267

WORKING LAMP AND PLACE

Item	Part No.	Description	Qty	Options
1	426-56-23360	LAMP ASS'Y	2	SN:B10001--
	421-06-23320	· LENS	1	SN:B10001--
	421-06-23330	· BULB¤ 70W	1	SN:B10001--
	08056-00271	· CONNECTOR	1	SN:B10001--
2	01010-81225	BOLT	2	SN:B10001--
3	01643-31232	WASHER	2	SN:B10001--
4	01643-31232	WASHER	2	SN:B10001--
5	01580-11210	NUT	2	SN:B10001--
6	☆	PLATE	1	SN:B10001--
	09620-A2120	· PLATE¤ NAME	1	SN:B10001--
	205-00-72430	· RIVET	4	SN:B10001--

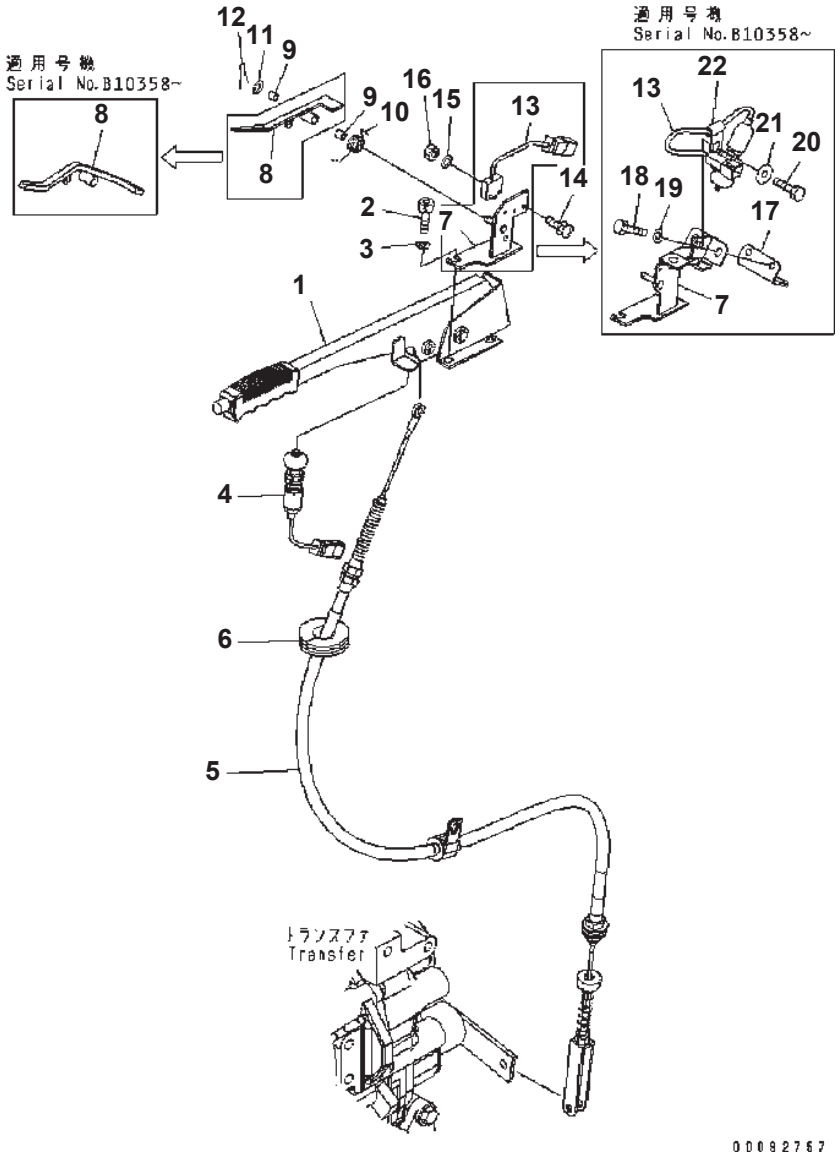

FLOOR (PARKING BRAKE)

Item	Part No.	Description	Qty	Options
1	418-22-36111	LEVER ASS'Y	1	SN:B10001--
2	01252-80825	BOLT	4	SN:B10001--
3	01643-50823	WASHER	4	SN:B10001--
4	421-S33-3282	SWITCH	1	SN:B10001--
5	418-22-36122	CABLE	1	SN:B10001--
6	416-22-26170	CAP	1	SN:B10001--
7	418-22-36153	BRACKET	1	SN:B10358--
	□418-22-36152	PLATE	1	SN:B10042--B10357
	418-22-36151	PLATE	1	SN:B10001--B10041
8	418-22-36175	PLATE	1	SN:B10358--
	□418-22-36174	PLATE	1	SN:B10042--B10357
	418-22-36173	PLATE	1	SN:B10042--B10129
	418-22-36172	PLATE	1	SN:B10001--B10041
9	417-43-17430	BUSHING	2	SN:B10001--
10	417-43-37990	SPRING	1	SN:B10042--
	417-43-17440	SPRING	1	SN:B10001--B10041
11	01641-20608	WASHER	1	SN:B10001--
12	04050-11612	PIN	1	SN:B10001--
13	421-S33-3282	SWITCH	1	SN:B10042--
	418-22-36220	SWITCH	1	SN:B10001--B10041
14	01023-10320	SCREW	2	SN:B10001--B10041
15	01640-20305	WASHER	2	SN:B10001--B10041
16	01580-10302	NUT	2	SN:B10001--B10041
17	418-22-46110	BRACKET	1	SN:B10358--
18	01010-80616	BOLT	2	SN:B10358--
19	01643-30623	WASHER	2	SN:B10358--
20	01010-80616	BOLT	1	SN:B10358--
21	22W-70-16120	WASHER	1	SN:B10358--
22	04434-50610	CLIP	1	SN:B10358--

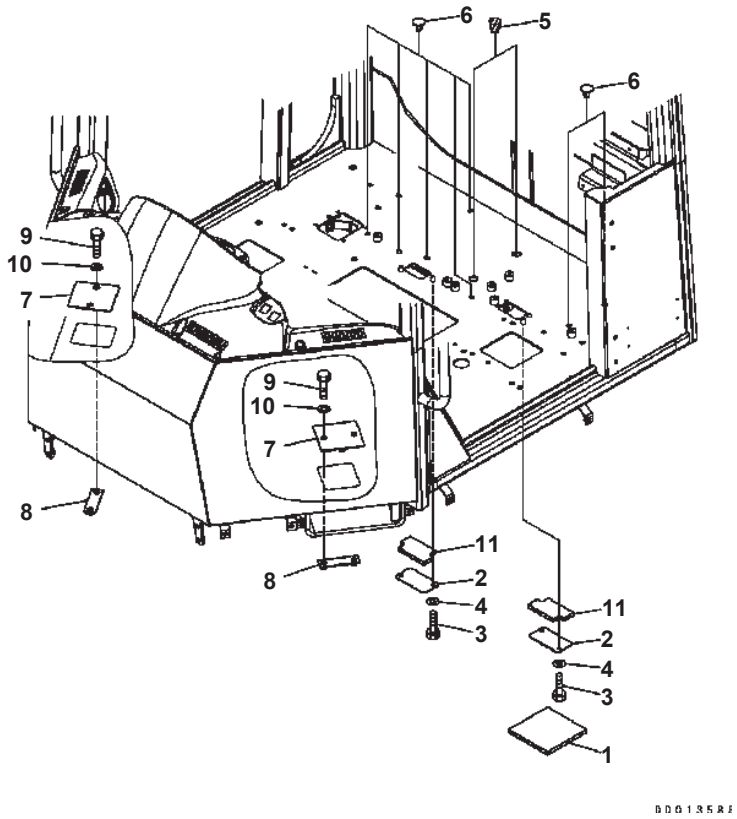

FLOOR (AIR CONDITIONER LESS)

Item	Part No.	Description	Qty	Options
1	423-950-2120	SHEET	2	SN:B10001--
2	423-950-2130	PLATE	2	SN:B10001--
3	01010-80620	BOLT	4	SN:B10001--
4	01643-30623	WASHER	4	SN:B10001--
5	07049-02734	PLUG	2	SN:B10001--
6	20Y-54-14540	PLUG	7	SN:B10001--
7	418-54-33320	PLATE	2	SN:B10001--
8	418-54-33330	PLATE	4	SN:B10001--
9	01010-81230	BOLT	4	SN:B10001--
10	01643-31232	WASHER	4	SN:B10001--
11	418-54-33390	SEAL	1	SN:B10001--

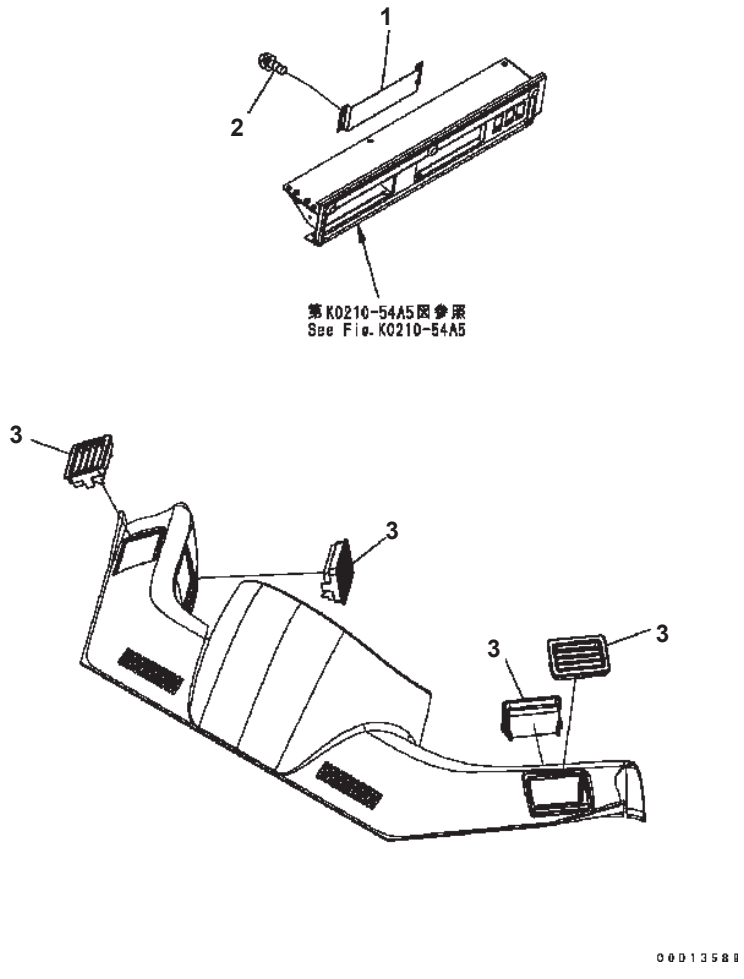

FLOOR (AIR DUCK) (AIR CONDITIONER LESS)

Item	Part No.	Description	Qty	Options
1	421-925-3530	PLATE	1	SN:B10001--
2	01023-10512	SCREW	4	SN:B10001--
3	421-925-3460	GRILLE ASS'Y	4	SN:B10001--
	421-925-3690	· SEAL	2	SN:B10001--

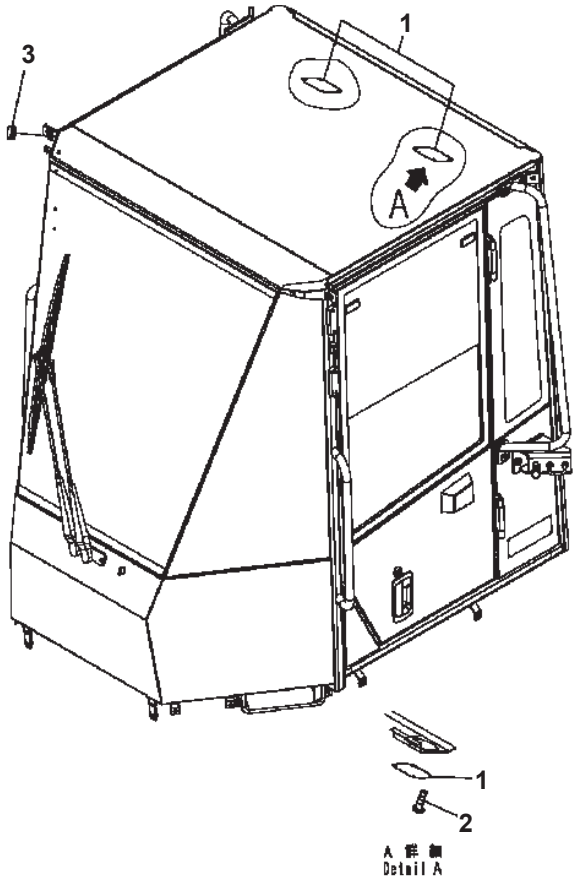

FLOOR (ANTENNA, SPEAKER COVER)

Item	Part No.	Description	Qty	Options
1	421-925-3520	PLATE	2	SN:B10001--
2	01220-40420	SCREW	8	SN:B10001--
3	09415-01008	CAP	1	SN:B10001--

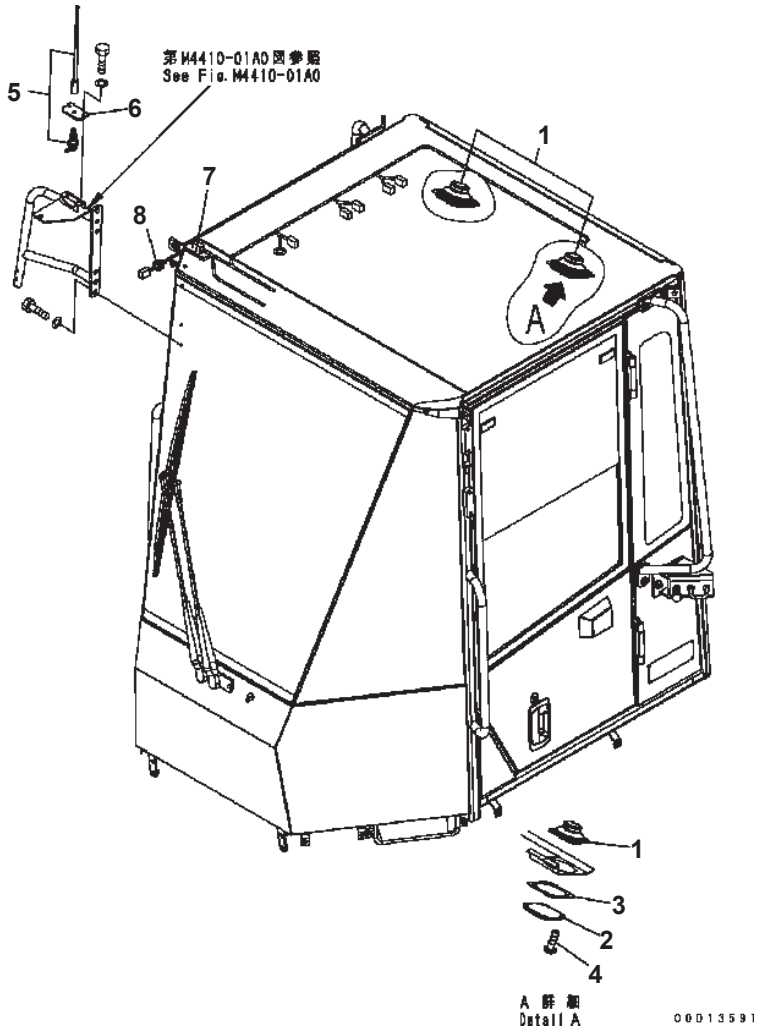

WA320-5 S/N B10001-UP

FLOOR (ANTENNA, SPEAKER)

Item	Part No.	Description	Qty	Options
1	20Y-06-42180	SPEAKER	2	SN:B10001--
2	418-967-2150	COVER	2	SN:B10001--
3	418-967-2230	PLATE	2	SN:B10001--
4	01220-40420	SCREW	8	SN:B10001--
5	198-Z11-4610	RUBBER ANTENNA	1	SN:B10017--
	416-56-31130	RUBBER ANTENNA	1	SN:B10001--B10016
6	416-926-3493	PLATE	1	SN:B10017--
	416-926-3492	PLATE	1	SN:B10001--B10016
7	417-926-3460	CONDUIT	1	SN:B10001--
8	08037-10610	GROMMET	1	SN:B10001--

Ref. K0210-40A6 Page 240650

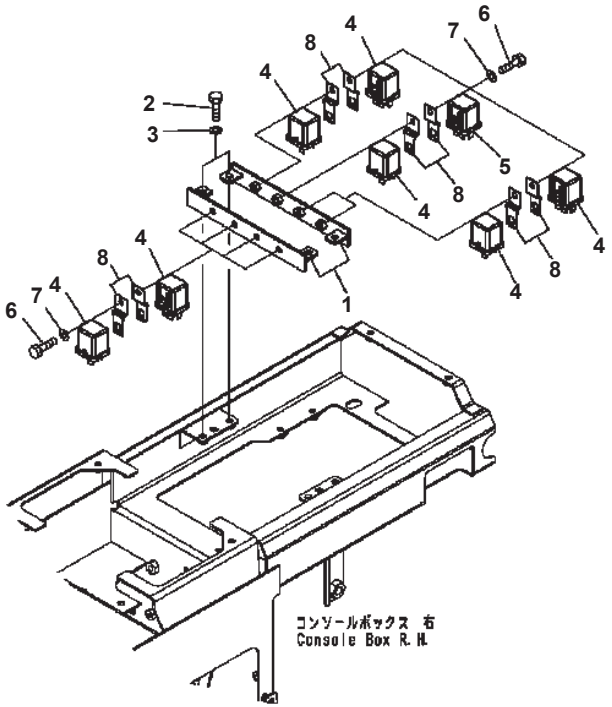

FLOOR (ELECTRICAL) (RELAY)

Item	Part No.	Description	Qty	Options
1	418-54-32990	BRACKET	2	SN:B10001--
2	01010-80616	BOLT	4	SN:B10001--
3	01643-30623	WASHER	4	SN:B10001--
4	569-06-61960	RELAY	15	SN:B10001--
5	569-06-61970	RELAY	1	SN:B10001--
6	01010-80616	BOLT	8	SN:B10001--
7	01643-30623	WASHER	8	SN:B10001--
8	287-06-16420	BRACKET	16	SN:B10001--

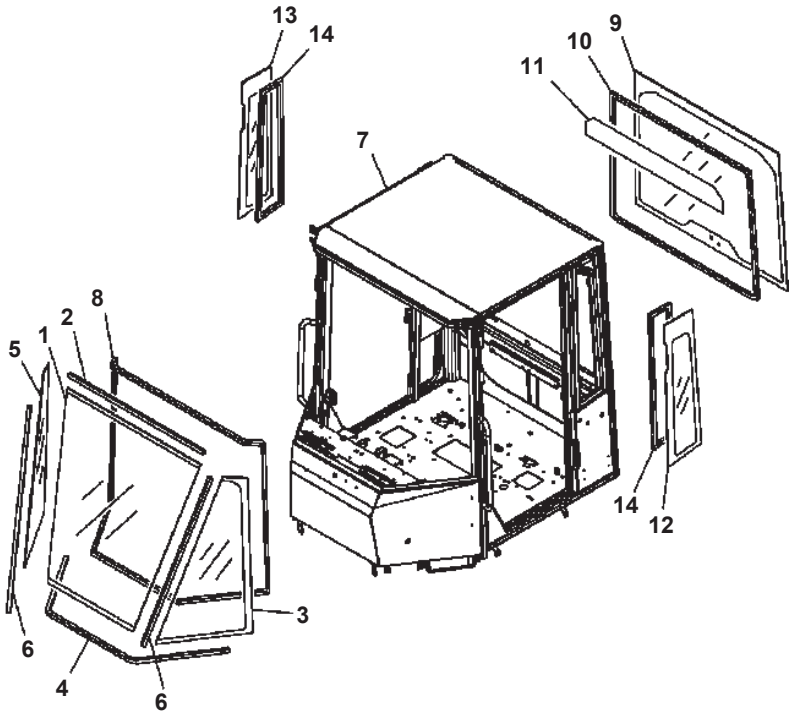

ROPS CAB (BODY, GLASS)

Item	Part No.	Description	Qty	Options
	419-926-B110	ROPS CAB ASS'Y	1	SN:B10130--
	419-926-3504	ROPS CAB ASS'Y	1	SN:B10001--B10129
		THESE ASSEMBLIES CONSIST OF ALL PARTS SHOWN IN FIGS.K0210-51A5 TO K0210-58A5.		
1	418-925-3540	· GLASS	1	SN:B10001--
2	417-926-3550	· WEATHER STRIP	1	SN:B10001--B10200
3	417-926-3520	· GLASS	1	SN:B10001--
4	417-926-3560	· WEATHER STRIP	1	SN:B10001--B10200
5	417-926-3530	· GLASS	1	SN:B10001--
6	417-926-3570	· WEATHER STRIP	2	SN:B10001--B10200
7	☆	· CAB	1	SN:B10001--
8	418-926-3510	· DAM	1	SN:B10001--
9	416-926-3571	· GLASS	1	SN:B10001--
10	418-926-3530	· DAM	1	SN:B10001--
11	421-926-3790	· PLATE	1	SN:B10001--
12	418-926-3581	· GLASS	1	SN:B10001--
13	418-926-3591	· GLASS	1	SN:B10001--
14	418-926-3520	· DAM	2	SN:B10001--

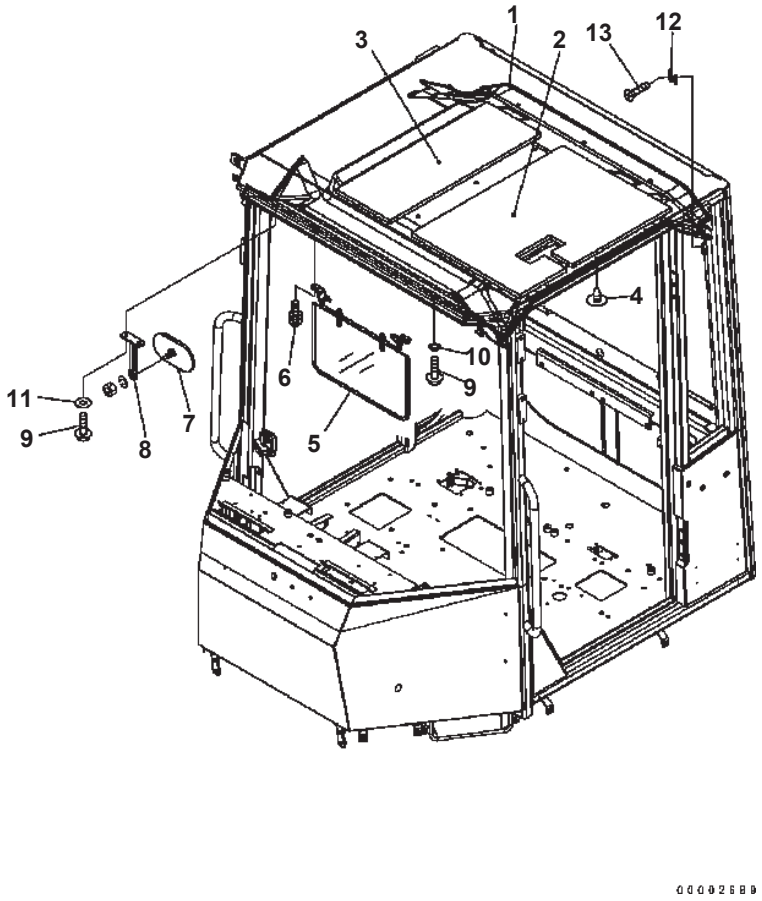

ROPS CAB (ROOF PAD) (#B10001-B010016)

Item	Part No.	Description	Qty	Options
	(419-926-3504)	ROPS CAB ASS'Y THESE ASSEMBLIES CONSIST OF ALL PARTS SHOWN IN FIGS.K0210-51A5 TO K0210-58A5.	1	SN:B10001--@
1	416-926-3481	· PAD	1	SN:B10001--@
2	416-926-3771	· SHEET	1	SN:B10001--@
3	416-926-3781	· SHEET	1	SN:B10001--@
4	423-56-21910	· BUTTON	13	SN:B10001--@
5	416-56-31120	· SUN VISOR	1	SN:B10001--@
6	01023-70620	· SCREW	4	SN:B10001--@
7	11Y-979-4190	· MIRROR	1	SN:B10001--B10016
8	418-926-3470	· STAY	1	SN:B10001--B10016
9	01435-40620	· BOLT	4	SN:B10001--@
10	01643-70623	· WASHER	2	SN:B10001--B10016
11	22W-70-16120	· WASHER	2	SN:B10001--B10016
12	205-54-51250	· HANGER	1	SN:B10001--@
13	01224-70420	· SCREW	2	SN:B10001--@

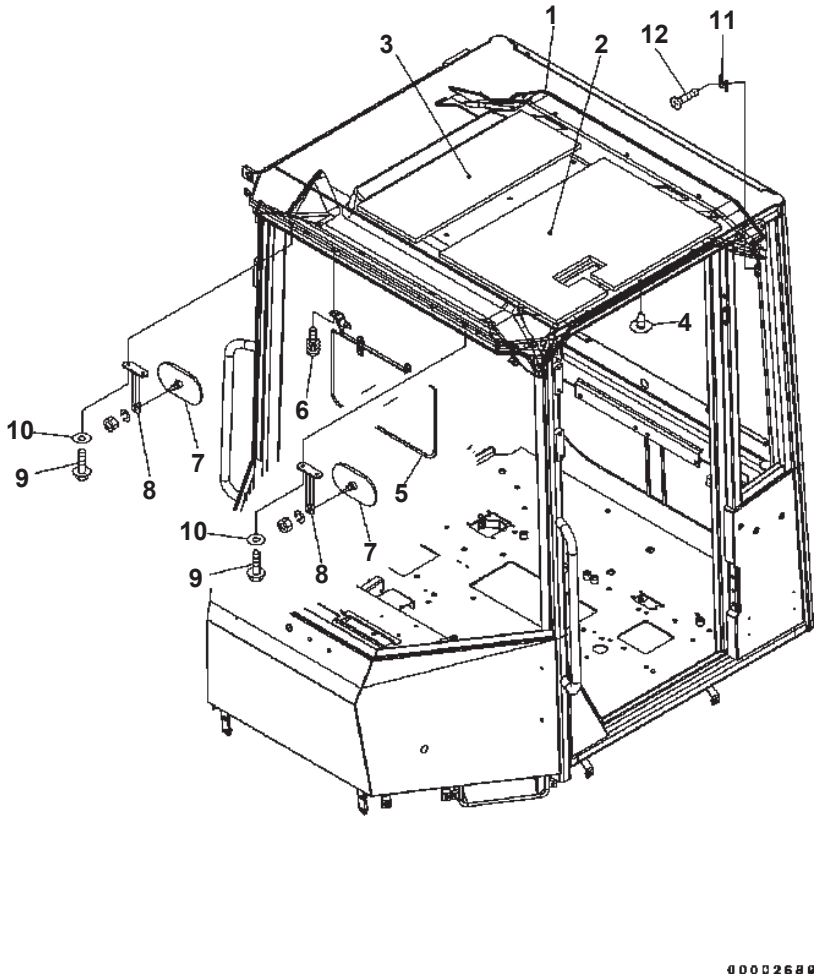

WA320-5 S/N B10001-UP

ROPS CAB (ROOF PAD) (#B10017-)

Item	Part No.	Description	Qty	Options
	(419-926-B110)	ROPS CAB ASS'Y	1	SN:B10130--
	(419-926-3504)	ROPS CAB ASS'Y	1	SN:B10001--B10129
		THESE ASSEMBLIES CONSIST OF ALL PARTS SHOWN IN FIGS.K0210-51A5 TO K0210-58A5.		
1	416-926-3481	· PAD	1	SN:B10001--
2	416-926-3771	· SHEET	1	SN:B10001--
3	416-926-3781	· SHEET	1	SN:B10001--
4	423-56-21910	· BUTTON	13	SN:B10001--
5	416-56-31120	· SUN VISOR	1	SN:B10001--
6	01023-70620	· SCREW	4	SN:B10001--
7	11Y-979-4190	· MIRROR	2	SN:B10017--
8	418-926-3470	· STAY	2	SN:B10017--
9	01435-40620	· BOLT	4	SN:B10001--
10	22W-70-16120	· WASHER	4	SN:B10017--
11	205-54-51250	· HANGER	1	SN:B10001--
12	01224-70412	· SCREW	2	SN:B10025--
	01224-70420	· SCREW	2	SN:B10001--B10024

Ref. K0210-52A5A Page 240690

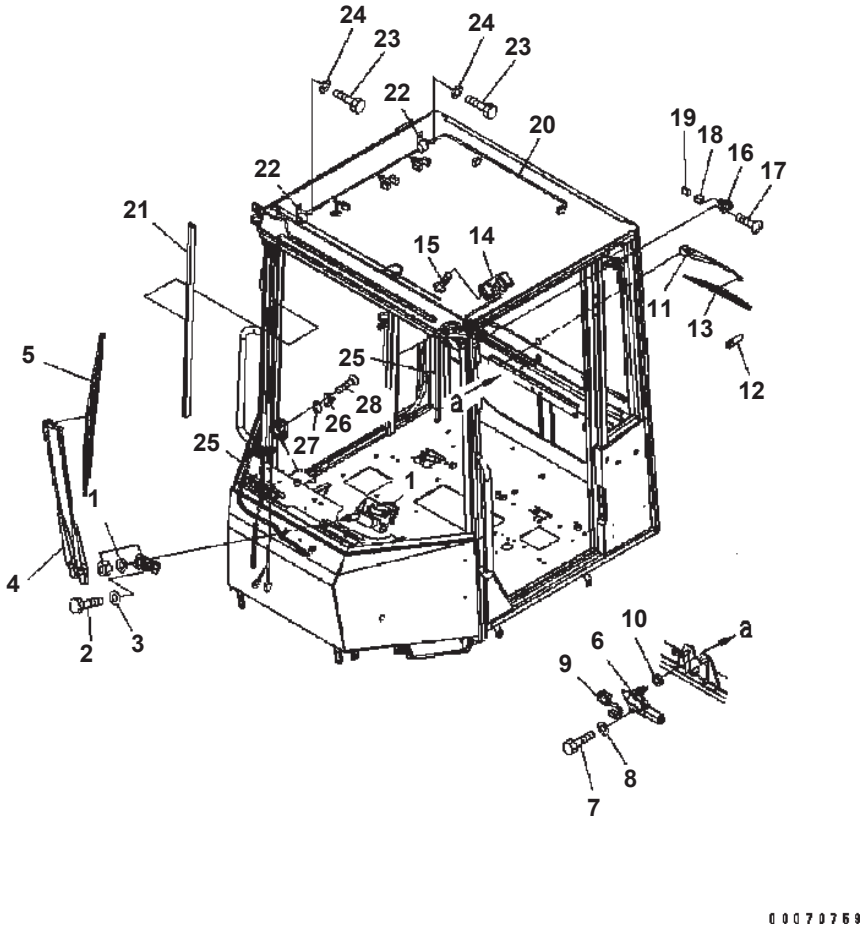

ROPS CAB (WIPER)

Item	Part No.	Description	Qty	Options
	(419-926-B110)	ROPS CAB ASS'Y	1	SN:B10130--
	(419-926-3504)	ROPS CAB ASS'Y	1	SN:B10001--B10129
		THESE ASSEMBLIES CONSIST OF ALL PARTS SHOWN IN FIGS.K0210-51A5 TO K0210-58A5.		
1	418-926-3932	· WIPER MOTOR	1	SN:B10001--
2	02030-70444	· BOLT	1	SN:B10001--
3	01642-20608	· WASHER	1	SN:B10138--
	□01643-70623	· WASHER	1	SN:B10001--B10137
4	418-923-3941	· ARM	1	SN:B10001--
5	425-54-15250	· BLADE	1	SN:B10001--
6	421-926-3612	· MOTOR ASS'Y	1	SN:B10001--
7	01010-80816	· BOLT	3	SN:B10001--
8	01643-30823	· WASHER	3	SN:B10001--
9	417-926-3760	· WIRING HARNESS	1	SN:B10001--
10	417-926-3650	· SPACER	1	SN:B10001--
11	418-926-3971	· WIPER ARM	1	SN:B10001--
12	22T-55-11630	· NOZZLE ASS'Y	1	SN:B10001--
13	20U-54-24850	· BLADE	1	SN:B10001--
14	421-06-26210	· LAMP ASS'Y	1	SN:B10001--
15	419-923-2130	· SCREW	2	SN:B10001--
16	424-926-3490	· SWITCH	2	SN:B10001--
17	419-923-2130	· SCREW	2	SN:B10001--
18	08056-00111	· CONNECTOR	2	SN:B10001--
19	08056-00130	· HOLDER	2	SN:B10001--
20	418-926-3892	· WIRING HARNESS	1	SN:B10001--
21	417-926-3450	· DUCT	1	SN:B10001--
22	04434-51310	· CLIP	2	SN:B10001--
23	01010-81016	· BOLT	3	SN:B10001--
24	01643-31032	· WASHER	3	SN:B10001--
25	421-54-15440	· HOSE, 4300MM	2	SN:B10001--
26	20Y-54-35470	· STRIKER	2	SN:B10001--
27	20Y-54-35480	· SHIM	2	SN:B10001--
28	01240-01025	· SCREW	4	SN:B10001--

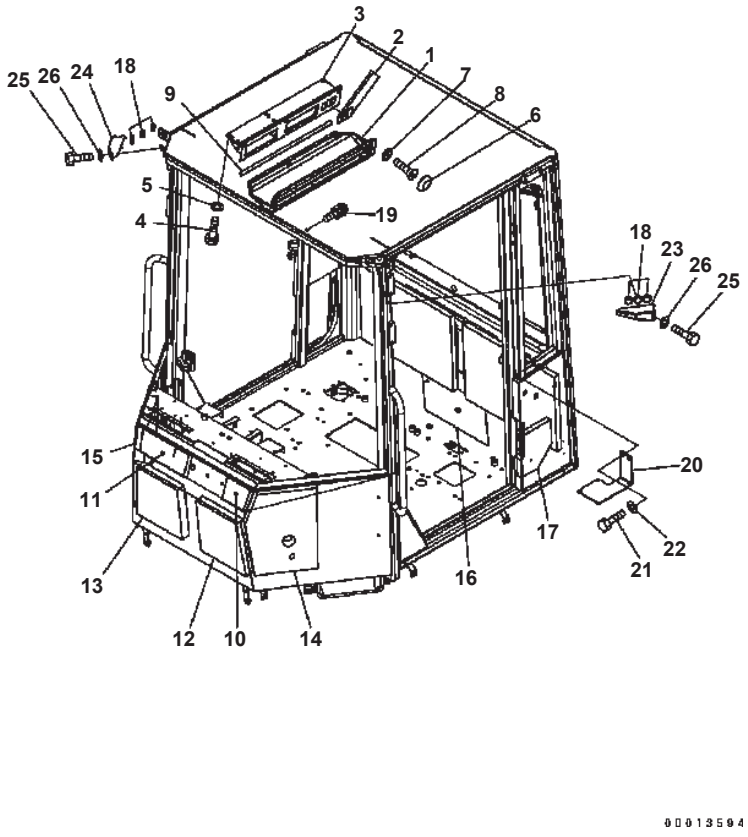

ROPS CAB (SHEET, COVER)

Item	Part No.	Description	Qty	Options
	(419-926-B110)	ROPS CAB ASS'Y	1	SN:B10130--
	(419-926-3504)	ROPS CAB ASS'Y	1	SN:B10001--B10129
		THESE ASSEMBLIES CONSIST OF ALL PARTS SHOWN IN FIGS.K0210-51A5 TO K0210-58A5.		
1	418-925-3450	· COVER	1	SN:B10001--
2	418-06-36230	· PLUG	3	SN:B10001--
3	418-926-3463	· BRACKET	1	SN:B10001--
4	01010-80616	· BOLT	6	SN:B10001--
5	01643-30623	· WASHER	6	SN:B10001--
6	421-09-31310	· CAP ASS'Y	8	SN:B10001--
7	22W-70-16120	· WASHER	8	SN:B10001--
8	01224-40620	· SCREW	8	SN:B10001--
9	418-925-3461	· FINISHER	1	SN:B10001--
10	416-926-3810	· SHEET	1	SN:B10001--
11	416-926-3820	· SHEET	1	SN:B10001--
12	416-926-3830	· SHEET	1	SN:B10001--
13	416-926-3840	· SHEET	1	SN:B10001--
14	416-926-3850	· SHEET	1	SN:B10001--
15	416-926-3860	· SHEET	1	SN:B10001--
16	416-926-3870	· SHEET	2	SN:B10001--
17	416-926-3880	· SHEET	1	SN:B10001--
18	09415-01008	· CAP	6	SN:B10001--
19	01023-60612	· SCREW	1	SN:B10001--
20	418-926-3H11	· BRACKET	1	SN:B10001--
21	01010-81020	· BOLT	2	SN:B10001--
22	01643-31032	· WASHER	2	SN:B10001--
23	418-925-3350	· COVER	1	SN:B10001--
24	418-925-3360	· COVER	1	SN:B10001--
25	01010-80612	· BOLT	4	SN:B10001--
26	01643-30623	· WASHER	4	SN:B10001--

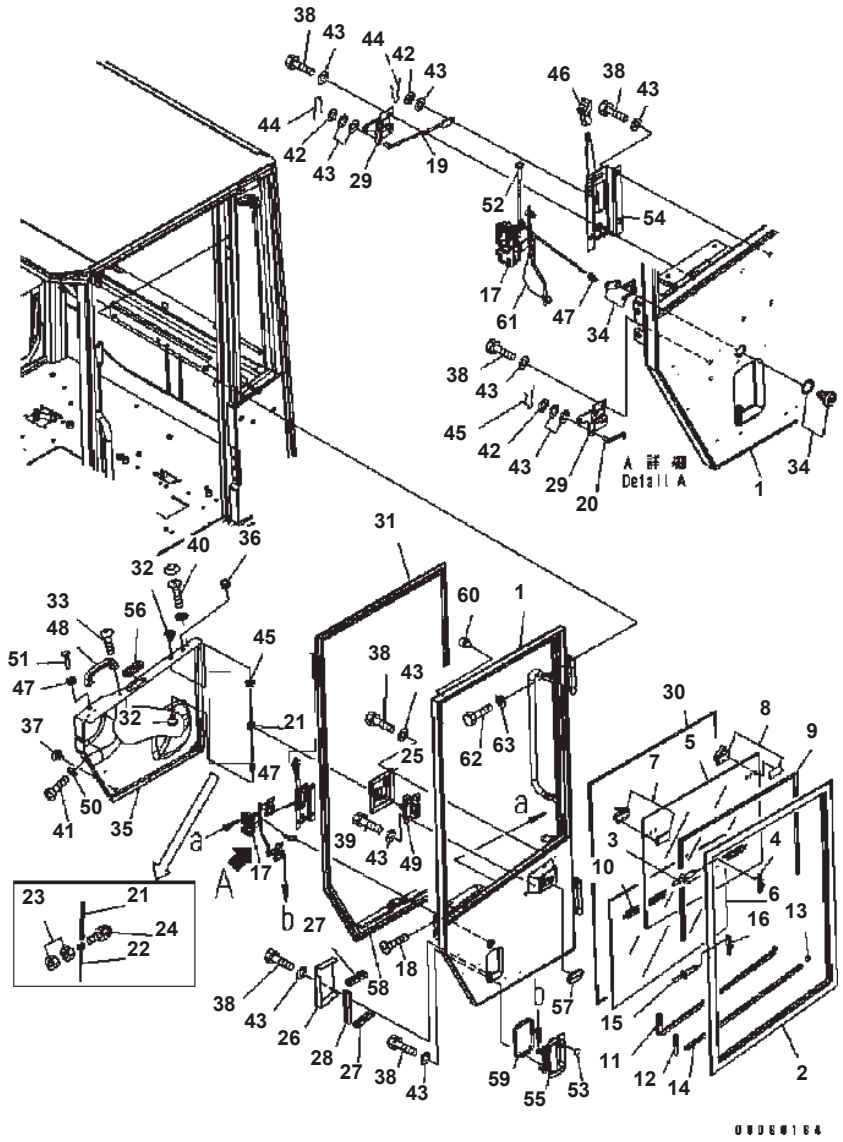

WA320-5 S/N B10001-UP

ROPS CAB (DOOR L.H) (#B10001-B10145)

Item	Part No.	Description	Qty	Options
	(419-926-B110)	ROPS CAB ASS'Y	1	SN:B10130--@
	(419-926-3504)	ROPS CAB ASS'Y	1	SN:B10001--B10129
		THESE ASSEMBLIES CONSIST OF ALL PARTS SHOWN IN FIGS.K0210-51A5 TO K0210-58A5.		
	417-926-3106	· DOOR ASS'Y	1	SN:B10146--@
	□417-926-3105	· DOOR ASS'Y	1	SN:B10001--B10145
1	☆	· · DOOR {L.H.}	1	SN:B10001--@
	14X-911-1330	· · · HINGE (WELDED)	2	SN:B10001--@
	417-926-3132	SASH ASS'Y {L.H.}	1	SN:B10001--@
2	417-926-3850	· · FRAME	1	SN:B10001--B10145
3	417-926-3990	· · · RIVET	8	SN:B10001--B10145
4	421-56-11970	· · · · CATCH	4	SN:B10001--B10145
5	417-926-3870	· · · GLASS	1	SN:B10001--B10145
6	417-926-3880	· · · GLASS	1	SN:B10001--B10145
7	417-926-3890	· · · LOCK ASS'Y	1	SN:B10001--@
8	417-926-3830	· · · LOCK ASS'Y	1	SN:B10001--@
9	417-926-3840	· · · CHANNEL	1	SN:B10001--B10145
10	417-926-3930	· · · CHANNEL	1	SN:B10001--B10145
11	417-926-3940	· · · RUBBER	1	SN:B10001--B10145
12	417-926-3950	· · · STOPPER	1	SN:B10001--B10145
13	417-926-3960	· · · STOPPER	1	SN:B10001--B10145
14	417-926-3970	· · · STOPPER	1	SN:B10001--B10145
15	417-926-3990	· · · RIVET	4	SN:B10001--B10145
16	421-56-11970	· · · CATCH	2	SN:B10001--B10145
17	417-926-3142	· · LOCK	1	SN:B10001--@
18	01224-70616	· · SCREW	3	SN:B10001--@
19	417-926-3150	· · ROD	1	SN:B10001--@
20	417-926-3160	· · ROD {L.H.}	1	SN:B10001--@
21	423-925-4220	· · ROD	1	SN:B10001--@
22	423-925-4230	· · ROD	1	SN:B10001--@
23	01580-10403	· · NUT	2	SN:B10001--@
24	01023-60430	· · SCREW	1	SN:B10001--@
25	417-926-3181	· · COVER	1	SN:B10001--@
26	417-926-3191	· · COVER {L.H.}	1	SN:B10001--@
27	417-926-3410	· · SEAL	2	SN:B10001--@
28	417-926-3420	· · SEAL	1	SN:B10001--@
29	417-926-3210	· · LINK ASS'Y {L.H.}	2	SN:B10001--@
30	417-926-3221	· · DAM	1	SN:B10001--@
31	417-926-3231	· · SEAL	1	SN:B10001--@

Ref. K0210-55A5 Page 240720

WA320-5 S/N B10001-UP

ROPS CAB (DOOR L.H) (#B10001-B10145)

Item	Part No.	Description	Qty	Options
32	417-926-3370	・・KNOB	2	SN:B10001--@
33	417-926-3250	・・SCREW	2	SN:B10001--@
34	417-926-3260	・・LOCK ASS'Y {L.H.}	1	SN:B10001--@
35	418-926-3912	・・COVER {L.H.}	1	SN:B10001--@
36	09415-01008	・・・CAP	1	SN:B10001--@
37	417-926-3470	・・・BUTTON	2	SN:B10001--@
38	01010-80616	・・BOLT	14	SN:B10001--@
39	01010-80620	・・BOLT	4	SN:B10001--@
40	01224-70616	・・SCREW	2	SN:B10001--@
41	01225-70616	・・SCREW	5	SN:B10001--@
42	01640-20610	・・WASHER	3	SN:B10001--@
43	01643-30623	・・WASHER	23	SN:B10001--@
44	04052-10633	・・PIN, SNAP	3	SN:B10001--@
45	08037-01008	・・GROMMET	3	SN:B10001--@
46	14X-911-1540	・・KNOB	1	SN:B10001--@
47	205-54-71830	・・SNAP	1	SN:B10001--@
48	205-54-72220	・・HANDLE	1	SN:B10001--@
49	417-926-3380	・・LOCK	1	SN:B10001--@
50	418-926-3490	・・WASHER	5	SN:B10001--@
51	419-54-16880	・・KNOB	1	SN:B10001--@
52	421-09-31310	・・CAP ASS'Y	2	SN:B10001--@
53	421-56-21720	・・CAP	1	SN:B10001--@
54	423-926-3223	・・HANDLE	1	SN:B10001--@
55	424-926-3261	・・HANDLE	1	SN:B10146--@
	□424-926-3260	・・HANDLE	1	SN:B10001--B10145
56	424-926-3630	・・GROMMET	1	SN:B10001--@
57	423-926-3860	・・GROMMET	1	SN:B10001--@
58	417-926-3430	・・SHEET	1	SN:B10001--@
59	417-926-3540	・・SEAL	1	SN:B10001--@
60	417-923-3950	・・STOPPER	1	SN:B10001--@
61	22B-54-16340	・・SNAP (ROD)	4	SN:B10018--@
62	01010-81016	・BOLT	6	SN:B10001--@
63	01643-31032	・WASHER	6	SN:B10001--@

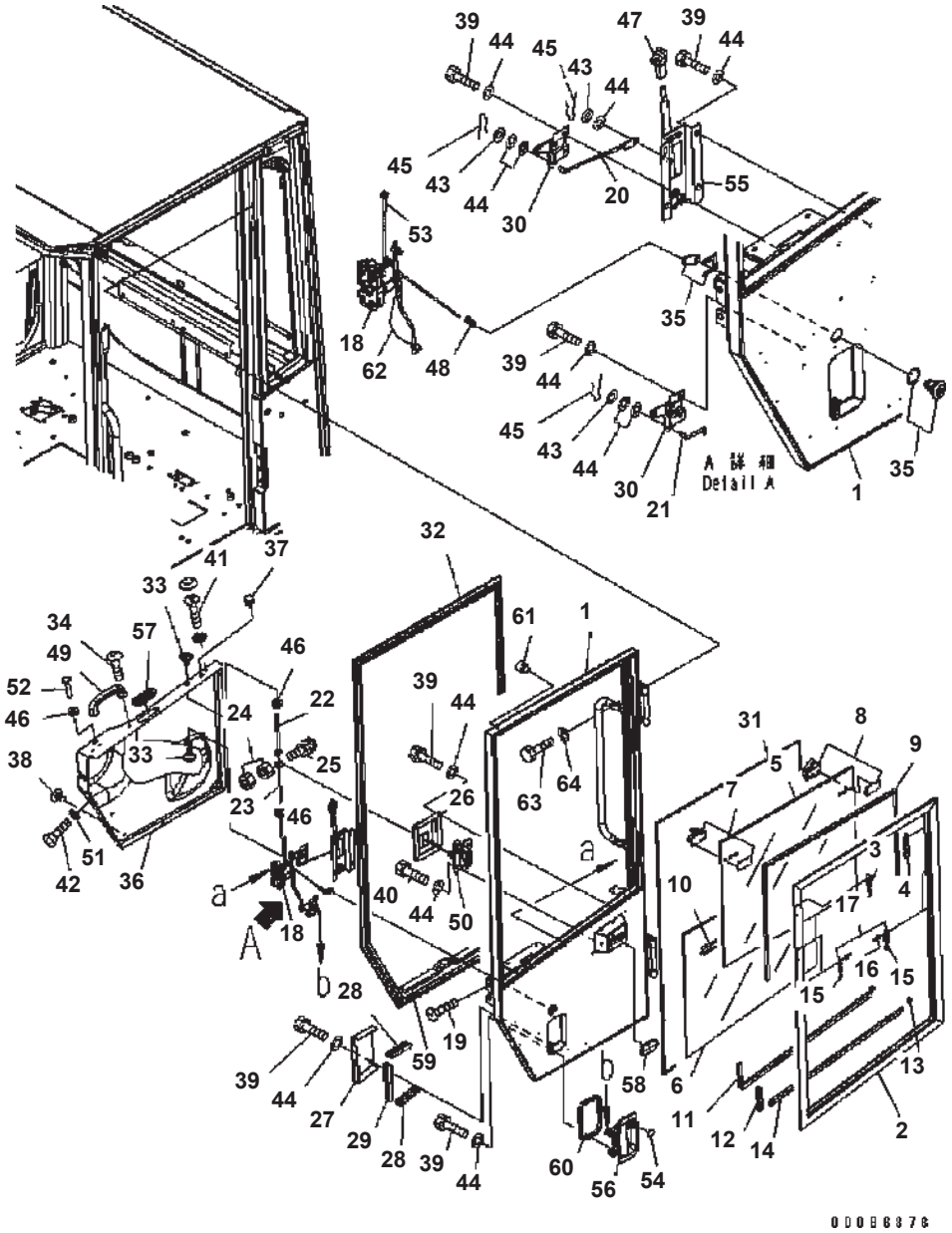

ROPS CAB (DOOR L.H) (#B10146-)

Item	Part No.	Description	Qty	Options
	(419-926-B110	ROPS CAB ASS'Y THESE ASSEMBLIES CONSIST OF ALL PARTS SHOWN IN FIGS.K0210-51A5 TO K0210-58A5.	1	SN:B10130--
	417-926-3106	· DOOR ASS'Y	1	SN:B10146--
1	☆	· · DOOR, L.H.	1	SN:B10001--
	14X-911-1330	· · · HINGE (WELDED)	2	SN:B10001--
	417-926-3132	· · SASH ASS'Y	1	SN:B10001--
2	417-926-3851	· · · FRAME	1	SN:B10146--
3	417-926-3670	· · · · CATCH	1	SN:B10146--
4	417-926-3680	· · · · CATCH	1	SN:B10146--
5	417-926-3871	· · · GLASS	1	SN:B10146--
6	417-926-3881	· · · GLASS	1	SN:B10146--
7	417-926-3890	· · · LOCK ASS'Y	1	SN:B10001--
8	417-926-3830	· · · LOCK ASS'Y	1	SN:B10001--
9	417-926-3841	· · · CHANNEL	1	SN:B10146--
10	417-926-3931	· · · CHANNEL	1	SN:B10146--
11	417-926-3941	· · · RUBBER	1	SN:B10146--
12	417-926-3951	· · · RUBBER	1	SN:B10146--
13	417-926-3961	· · · RUBBER	1	SN:B10146--
14	417-926-3971	· · · RUBBER	1	SN:B10146--
15	417-926-3820	· · · RUBBER	2	SN:B10146--
16	417-926-3991	· · · RIVET	8	SN:B10146--
17	417-926-3660	· · · CATCH	4	SN:B10146--
18	417-926-3142	· · LOCK	1	SN:B10001--
19	01224-70616	· · SCREW	3	SN:B10001--
20	417-926-3150	· · ROD	1	SN:B10001--
21	417-926-3160	· · ROD, L.H.	1	SN:B10001--
22	423-926-4220	· · ROD	1	SN:B10001--
23	423-925-4230	· · ROD	1	SN:B10001--
24	01580-10403	· · NUT	2	SN:B10001--
25	01023-60430	· · SCREW	1	SN:B10001--
26	417-926-3181	· · COVER	1	SN:B10001--
27	417-926-3191	· · COVER, L.H.	1	SN:B10001--
28	417-926-3410	· · SEAL	2	SN:B10001--
29	417-926-3420	· · SEAL	1	SN:B10001--
30	417-926-3210	· · LINK ASS'Y, L.H.	2	SN:B10001--
31	417-926-3221	· · DAM	1	SN:B10001--
32	417-926-3231	· · SEAL	1	SN:B10001--
33	417-926-3370	· · KNOB	2	SN:B10001--

WA320-5 S/N B10001-UP

ROPS CAB (DOOR L.H) (#B10146-)

Item	Part No.	Description	Qty	Options
34	417-926-3250	・・ SCREW	2	SN:B10001--
35	417-926-3260	・・ LOCK ASS'Y, L.H.	1	SN:B10001--
36	418-926-3912	・・ COVER, L.H.	1	SN:B10001--
37	09415-01008	・・・ CAP	1	SN:B10001--
38	417-926-3470	・・・ BUTTON	2	SN:B10001--
39	01010-80616	・・ BOLT	14	SN:B10001--
40	01010-80620	・・ BOLT	4	SN:B10001--
41	01224-70616	・・ SCREW	2	SN:B10001--
42	01225-70616	・・ SCREW	5	SN:B10001--
43	01640-20610	・・ WASHER	3	SN:B10001--
44	01643-30623	・・ WASHER	23	SN:B10001--
45	04052-10633	・・ PIN, SNAP	3	SN:B10001--
46	08037-01008	・・ GROMMET	3	SN:B10001--
47	14X-911-1540	・・ KNOB	1	SN:B10001--
48	205-54-71830	・・ SNAP	1	SN:B10001--
49	205-54-72220	・・ HANDLE	1	SN:B10001--
50	417-926-3380	・・ LOCK	1	SN:B10001--
51	418-926-3490	・・ WASHER	5	SN:B10001--
52	419-54-16880	・・ KNOB	1	SN:B10001--
53	421-09-31310	・・ CAP ASS'Y	2	SN:B10001--
54	421-56-21720	・・ CAP	1	SN:B10001--
55	423-926-3223	・・ HANDLE	1	SN:B10001--
56	424-926-3261	・・ HANDLE	1	SN:B10146--
57	424-926-3630	・・ GROMMET	1	SN:B10001--
58	423-926-3860	・・ GROMMET	1	SN:B10001--
59	417-926-3430	・・ SHEET	1	SN:B10001--
60	417-926-3540	・・ SEAL	1	SN:B10001--
61	417-923-3950	・・ STOPPER	1	SN:B10001--
62	22B-54-16340	・・ SNAP (ROD)	4	SN:B10018--
63	01010-81016	・ BOLT	6	SN:B10001--
64	01643-31032	・ WASHER	6	SN:B10001--

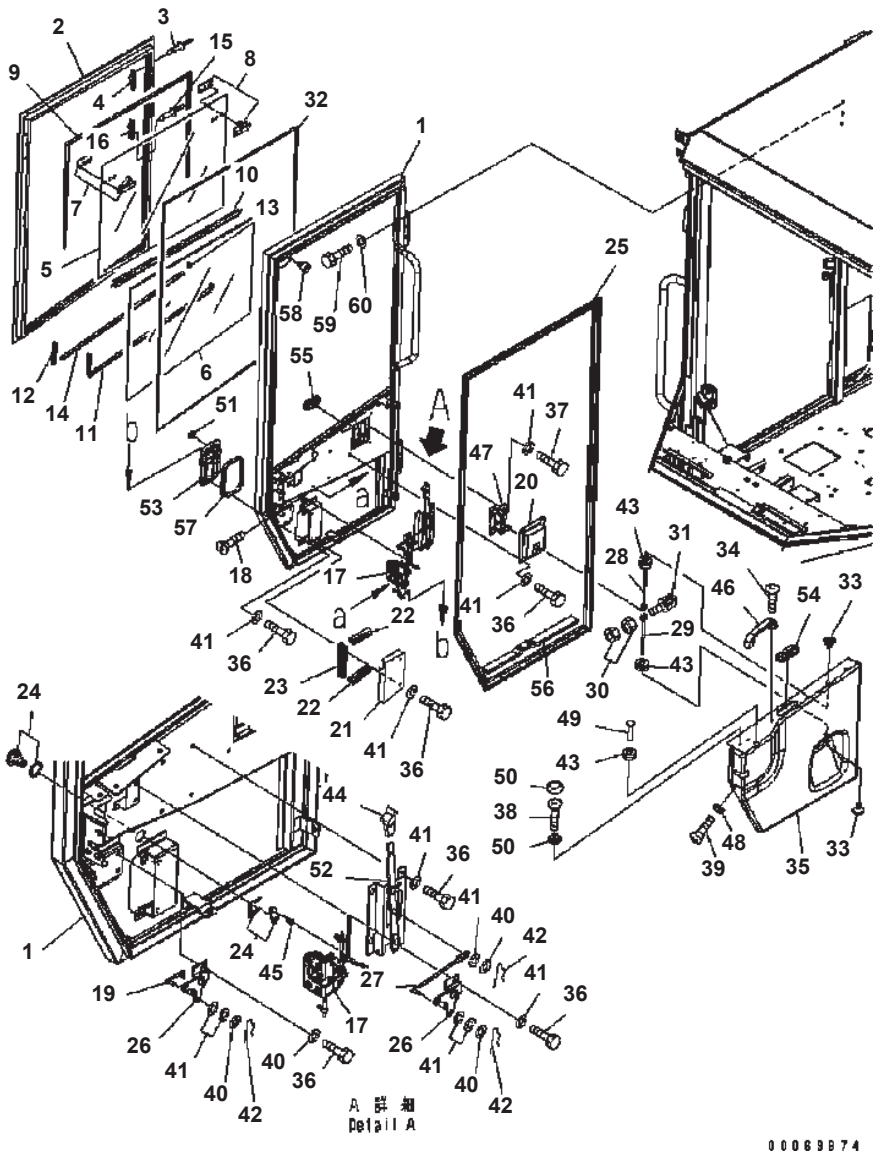

ROPS CAB (DOOR R.H.) (#B10001-B10145)

Item	Part No.	Description	Qty	Options
	(419-926-B110)	ROPS CAB ASS'Y	1	SN:B10130--@
	(419-926-3504)	ROPS CAB ASS'Y	1	SN:B10001--B10129
		THESE ASSEMBLIES CONSIST OF ALL PARTS SHOWN IN FIGS.K0210-51A5 TO K0210-58A5.		
	418-923-3404	· DOOR ASS'Y		SN:B10146--@
	□418-923-3403	· DOOR ASS'Y	1	SN:B10001--B10145
1	☆	· · DOOR {R.H.}	1	SN:B10001--@
	14X-911-1330	· · · HINGE (WELDED)	2	SN:B10001--@
	417-926-3272	· · SASH ASS'Y {R.H.}	1	SN:B10001--@
2	417-926-3860	· · · FRAME	1	SN:B10001--B10145
3	417-926-3990	· · · · RIVET	8	SN:B10001--B10145
4	421-56-11970	· · · · CATCH	4	SN:B10001--B10145
5	417-926-3870	· · · GLASS	1	SN:B10001--B10145
6	417-926-3880	· · · GLASS	1	SN:B10001--B10145
7	417-926-3890	· · · LOCK	1	SN:B10001--@
8	417-926-3830	· · · LOCK ASS'Y	1	SN:B10001--@
9	417-926-3840	· · · CHANNEL	1	SN:B10001--B10145
10	417-926-3930	· · · CHANNEL	1	SN:B10001--B10145
11	417-926-3940	· · · RUBBER	1	SN:B10001--B10145
12	417-926-3950	· · · STOPPER	1	SN:B10001--B10145
13	417-926-3960	· · · STOPPER	1	SN:B10001--B10145
14	417-926-3970	· · · STOPPER	1	SN:B10001--B10145
15	417-926-3990	· · · RIVET	4	SN:B10001--B10145
16	421-56-11970	· · · CATCH	2	SN:B10001--B10145
17	417-926-3281	· · LOCK {R.H.}	1	SN:B10001--@
18	01224-70616	· · SCREW	3	SN:B10001--@
19	417-926-3290	· · ROD {R.H.}	1	SN:B10001--@
20	417-926-3181	· · COVER {R.H.}	1	SN:B10001--@
21	417-926-3321	· · COVER {R.H.}	1	SN:B10001--@
22	417-926-3410	· · SEAL	2	SN:B10001--@
23	417-926-3420	· · SEAL	1	SN:B10001--@
24	417-926-3330	· · LOCK ASS'Y {R.H.}	1	SN:B10001--@
25	417-926-3341	· · SEAL	1	SN:B10001--@
26	417-926-3350	· · LINK ASS'Y {R.H.}	2	SN:B10001--@
27	417-926-3150	· · ROD	1	SN:B10001--@
28	423-925-4220	· · ROD	1	SN:B10001--@
29	423-925-4230	· · ROD	1	SN:B10001--@
30	01580-10403	· · NUT	2	SN:B10001--@
31	01023-60430	· · SCREW	2	SN:B10001--@

WA320-5 S/N B10001-UP

ROPS CAB (DOOR R.H.) (#B10001-B10145)

Item	Part No.	Description	Qty	Options
32	417-926-3221	・・DAM	1	SN:B10001--@
33	417-926-3370	・・KNOB	2	SN:B10001--@
34	417-926-3250	・・SCREW	2	SN:B10001--@
35	418-926-3923	・・COVER {R.H.}	1	SN:B10001--@
36	01010-80616	・・BOLT	14	SN:B10001--@
37	01010-80620	・・BOLT	4	SN:B10001--@
38	01224-70616	・・SCREW	2	SN:B10001--@
39	01225-70616	・・SCREW	5	SN:B10001--@
40	01640-20610	・・WASHER	3	SN:B10001--@
41	01643-30623	・・WASHER	23	SN:B10001--@
42	04052-10633	・・PIN, SNAP	3	SN:B10001--@
43	08037-01008	・・GROMMET	3	SN:B10001--@
44	14X-911-1540	・・KNOB	1	SN:B10001--@
45	205-54-71830	・・SNAP	1	SN:B10001--@
46	205-54-72220	・・HANDLE	1	SN:B10001--@
47	417-926-3380	・・LOCK	1	SN:B10001--@
48	418-926-3490	・・WASHER	5	SN:B10001--@
49	419-54-16880	・・KNOB	1	SN:B10001--@
50	421-09-31310	・・CAP ASS'Y	2	SN:B10001--@
51	421-56-21720	・・CAP	1	SN:B10001--@
52	423-926-3233	・・HANDLE	1	SN:B10001--@
53	424-926-3271	・・HANDLE	1	SN:B10146--@
	□424-926-3270	・・HANDLE	1	SN:B10001--B10145
54	424-926-3630	・・GROMMET	1	SN:B10001--@
55	423-926-3860	・・GROMMET	1	SN:B10001--@
56	417-926-3430	・・SHEET	1	SN:B10001--@
57	417-926-3540	・・SEAL	1	SN:B10001--@
58	417-923-3950	・・STOPPER	1	SN:B10001--@
59	01010-81016	・BOLT	6	SN:B10001--@
60	01643-31032	・WASHER	6	SN:B10001--@

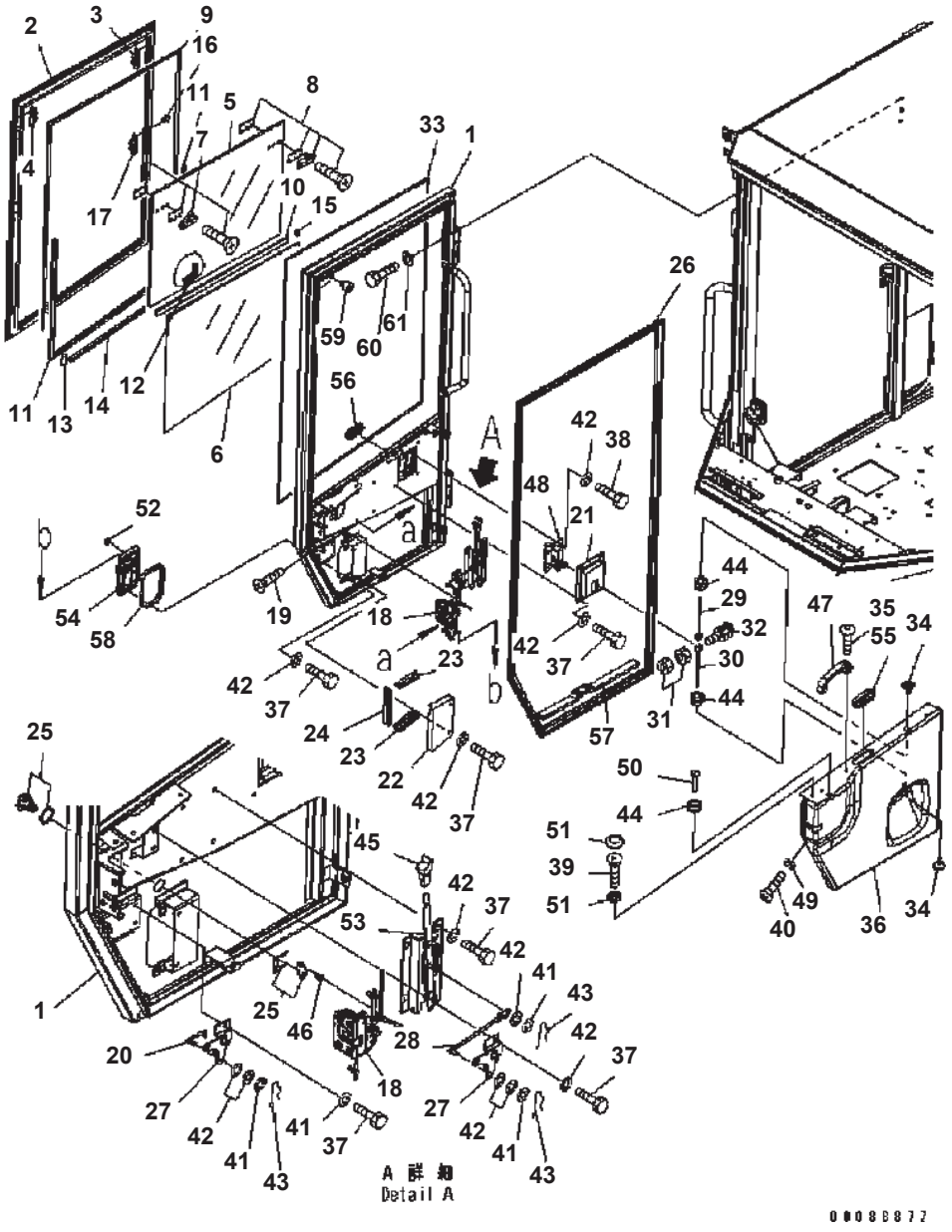

WA320-5 S/N B10001-UP

ROPS CAB (DOOR R.H.) (#B10146-)

Item	Part No.	Description	Qty	Options
	(419-926-B110)	ROPS CAB ASS'Y THESE ASSEMBLIES CONSIST OF ALL PARTS SHOWN IN FIGS.K0210-51A5 TO K0210-58A5.	1	SN:B10130--
	418-923-3404	· DOOR ASS'Y	1	SN:B10146--
1	☆	· · DOOR	1	SN:B10001--
	14X-911-1330	· · · HINGE (WELDED)	2	SN:B10001--
	417-926-3272	· · SASH ASS'Y	1	SN:B10001--
2	417-926-3861	· · · FRAME	1	SN:B10146--
3	417-926-3670	· · · · CATCH	4	SN:B10146--
4	417-926-3680	· · · · CATCH	1	SN:B10146--
5	417-926-3871	· · · GLASS	1	SN:B10146--
6	417-926-3881	· · · GLASS	1	SN:B10146--
7	417-926-3890	· · · LOCK ASS'Y	1	SN:B10001--
8	417-926-3830	· · · LOCK ASS'Y	1	SN:B10001--
9	417-926-3841	· · · CHANNEL	1	SN:B10146--
10	417-926-3931	· · · CHANNEL	1	SN:B10146--
11	417-926-3941	· · · RUBBER	1	SN:B10146--
12	417-926-3951	· · · RUBBER	1	SN:B10146--
13	417-926-3961	· · · RUBBER	1	SN:B10146--
14	417-926-3971	· · · RUBBER	1	SN:B10146--
15	417-926-3820	· · · RUBBER	2	SN:B10146--
16	417-926-3991	· · · RIVET	8	SN:B10146--
17	417-926-3660	· · · CATCH	4	SN:B10146--
18	417-926-3282	· · LOCK	1	SN:B10240--
	□417-926-3281	· · LOCK	1	SN:B10001--B10239
19	01224-70616	· · SCREW	3	SN:B10001--
20	417-926-3290	· · ROD	1	SN:B10001--
21	417-926-3181	· · COVER	1	SN:B10001--
22	417-926-3321	· · COVER	1	SN:B10001--
23	417-926-3410	· · SEAL	2	SN:B10001--
24	417-926-3420	· · SEAL	1	SN:B10001--
25	417-926-3330	· · LOCK ASS'Y	1	SN:B10001--
26	417-926-3341	· · SEAL	1	SN:B10001--
27	417-926-3350	· · LINK ASS'Y	2	SN:B10001--
28	417-926-3150	· · ROD	1	SN:B10001--
29	423-925-4220	· · ROD	1	SN:B10001--
30	423-925-4230	· · ROD	1	SN:B10001--
31	01580-10403	· · NUT	2	SN:B10001--
32	01023-60430	· · SCREW	1	SN:B10001--

WA320-5 S/N B10001-UP

ROPS CAB (DOOR R.H.) (#B10146-)

Item	Part No.	Description	Qty	Options
33	417-926-3221	・・DAM	1	SN:B10001--
34	417-926-3370	・・KNOB	2	SN:B10001--
35	417-926-3250	・・SCREW	2	SN:B10001--
36	418-926-3923	・・COVER	1	SN:B10001--
37	01010-80616	・・BOLT	14	SN:B10001--
38	01010-80620	・・BOLT	4	SN:B10001--
39	01224-70616	・・SCREW	2	SN:B10001--
40	01225-70616	・・SCREW	5	SN:B10001--
41	01640-20610	・・WASHER	3	SN:B10001--
42	01643-30623	・・WASHER	23	SN:B10001--
43	04052-10623	・・PIN, SNAP	3	SN:B10001--
44	08037-01008	・・GROMMET	3	SN:B10001--
45	14X-911-1540	・・KNOB	1	SN:B10001--
46	205-54-71830	・・SNAP	1	SN:B10001--
47	205-54-72220	・・HANDLE	1	SN:B10001--
48	417-926-3380	・・LOCK	1	SN:B10001--
49	418-926-3490	・・WASHER	5	SN:B10001--
50	419-54-16880	・・KNOB	1	SN:B10001--
51	421-09-31310	・・CAP ASS'Y	2	SN:B10001--
52	421-56-21720	・・CAP	1	SN:B10001--
53	423-926-3233	・・HANDLE	1	SN:B10001--
54	424-926-3271	・・HANDLE	1	SN:B10146--
55	424-926-3630	・・GROMMET	1	SN:B10001--
56	423-926-3860	・・GROMMET	1	SN:B10001--
57	417-926-3430	・・SHEET	1	SN:B10001--
58	417-926-3540	・・SEAL	1	SN:B10001--
59	417-923-3950	・・STOPPER	1	SN:B10001--
60	01010-81016	・BOLT	6	SN:B10001--
61	01643-31032	・WASHER	6	SN:B10001--

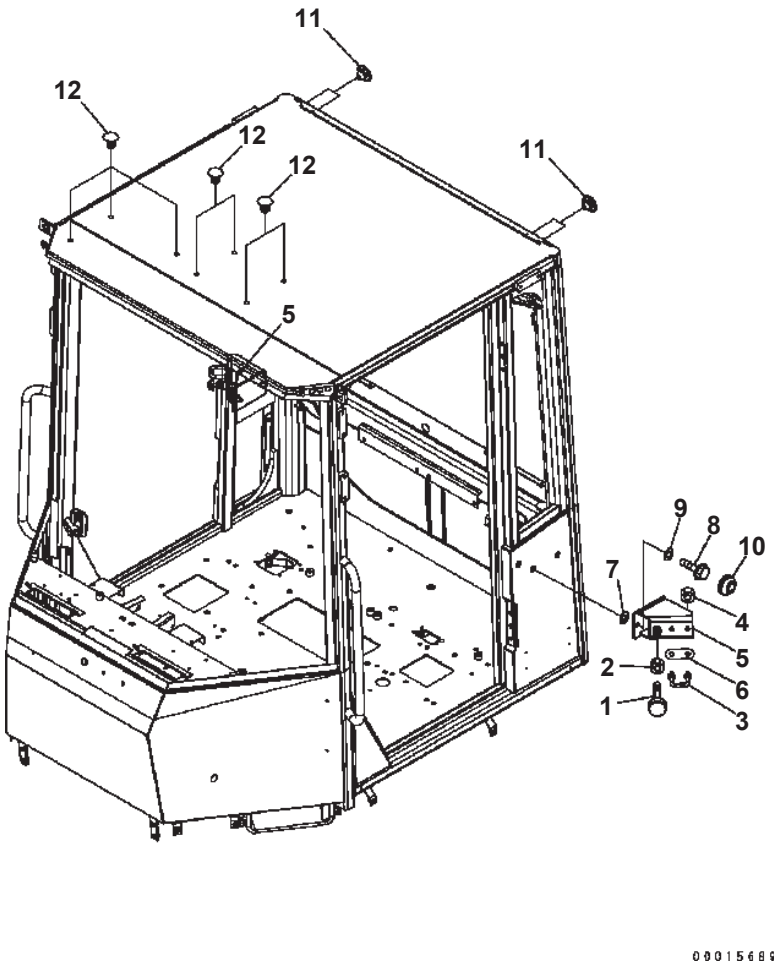

WA320-5 S/N B10001-UP

ROPS CAB (STOPPER)

Item	Part No.	Description	Qty	Options
1	(419-926-B110)	ROPS CAB ASS'Y	1	SN:B10130--
	(419-926-3504)	ROPS CAB ASS'Y	1	SN:B10001--B10129
		THESE ASSEMBLIES CONSIST OF ALL PARTS SHOWN IN FIGS.K0210-51A5 TO K0210-58A5.		
1	20T-54-75290	· STOPPER	2	SN:B10001--
2	01580-11008	· NUT	2	SN:B10001--
3	20Y-54-35961	· STRIKER	2	SN:B10001--
4	01580-11008	· NUT	4	SN:B10001--
5	418-926-3760	· BRACKET	2	SN:B10001--
6	20Y-54-35710	· PLATE	2	SN:B10001--
7	07005-01412	· GASKET	6	SN:B10001--
8	01435-01025	· BOLT	4	SN:B10001--
9	01643-31032	· WASHER	4	SN:B10001--
10	363-54-31450	· CAP	4	SN:B10001--
11	426-56-21990	· PLUG	4	SN:B10001--
12	421-09-21210	· BUTTON	7	SN:B10001--

Ref. K0210-57A5 Page 240760

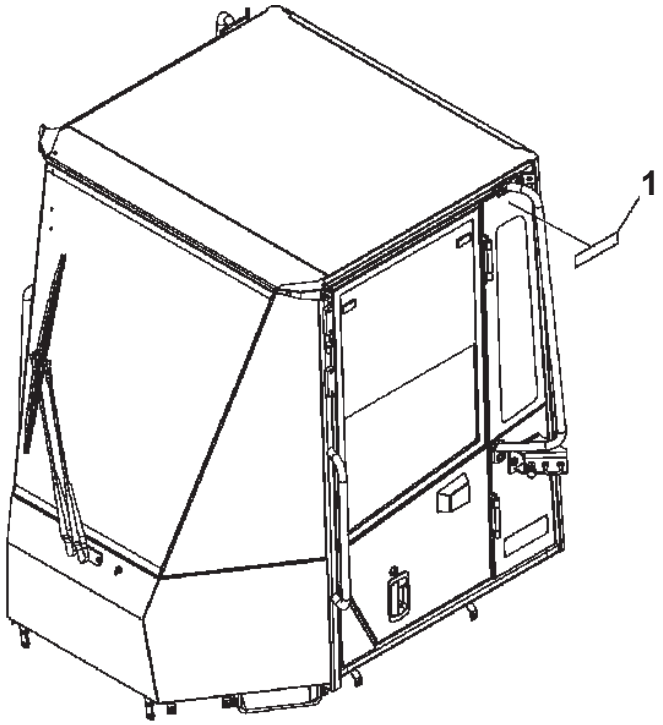

ROPS CAB (MARK)

Item	Part No.	Description	Qty	Options
	(419-926-B110)	ROPS CAB ASS'Y	1	SN:B10130--
	(419-926-3504)	ROPS CAB ASS'Y	1	SN:B10001--B10129
		THESE ASSEMBLIES CONSIST OF ALL PARTS SHOWN IN FIGS.K0210-51A5 TO K0210-58A5.		
1	418-93-31410	· MARK {GALEO}	2	SN:B10001--B10129

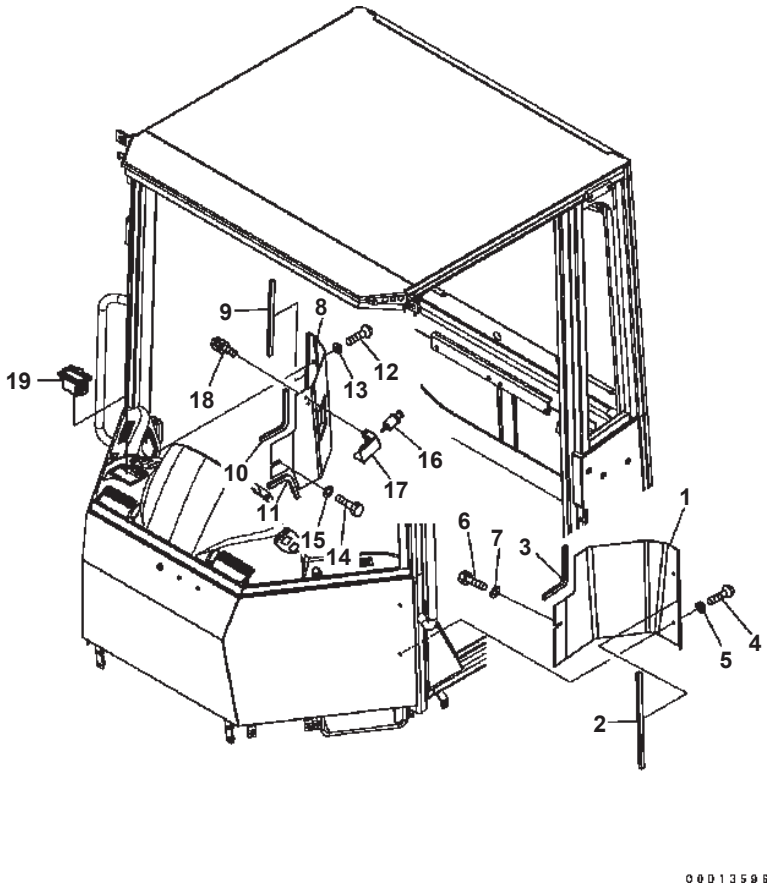

ROPS CAB (COVER) (#B10001-B10228)

Item	Part No.	Description	Qty	Options
1	418-921-3510	COVER	1	SN:B10001--B10228
2	424-926-3240	FINISHER	1	SN:B10001--B10228
3	424-926-3230	FINISHER	1	SN:B10001--B10228
4	01225-70620	SCREW	2	SN:B10001--B10228
5	23S-55-51970	WASHER	2	SN:B10001--B10228
6	01010-80616	BOLT	1	SN:B10001--B10228
7	01643-30623	WASHER	1	SN:B10001--B10228
8	417-926-3720	COVER	1	SN:B10001--B10228
9	424-926-3240	FINISHER	1	SN:B10001--B10228
10	424-926-3230	FINISHER	1	SN:B10001--B10228
11	22T-56-13210	SEAL	1	SN:B10001--B10228
12	01225-70620	SCREW	2	SN:B10001--B10228
13	23S-55-51970	WASHER	2	SN:B10001--B10228
14	01010-80616	BOLT	1	SN:B10001--B10228
15	01643-30623	WASHER	1	SN:B10001--B10228
16	20Y-06-23472	LIGHTER	1	SN:B10001--B10228
17	424-926-3280	BRACKET	1	SN:B10001--B10228
18	421-09-21460	SCREW	2	SN:B10001--B10228
19	20Y-06-21751	ASHTRAY	1	SN:B10001--B10228

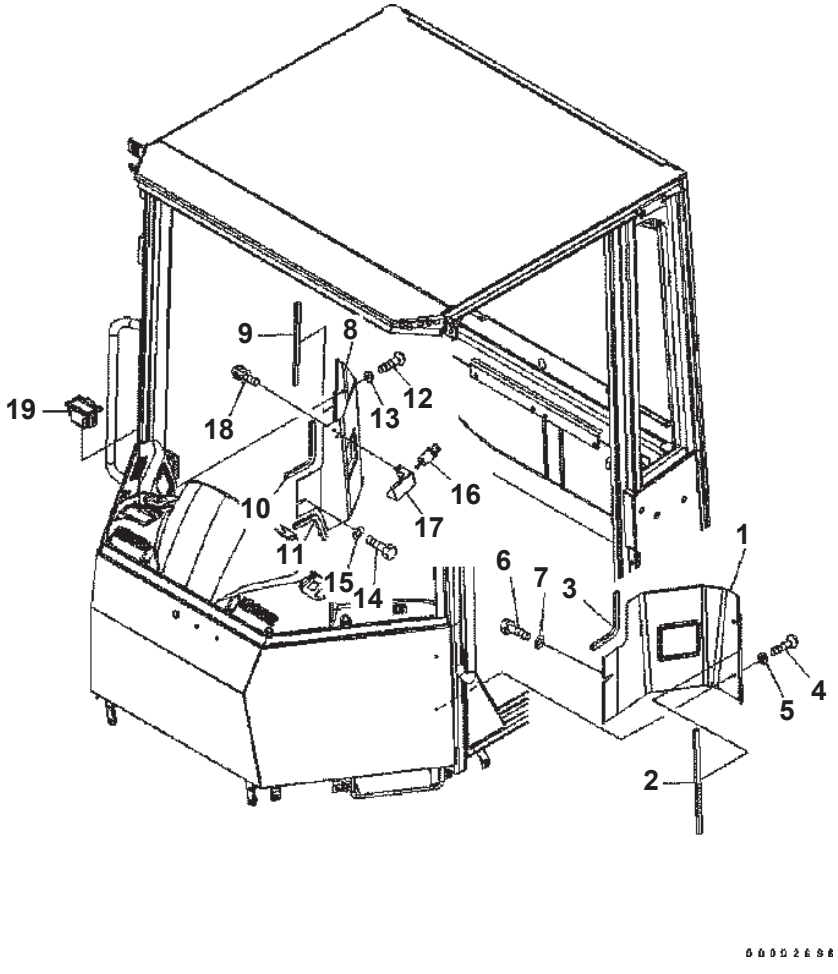

ROPS CAB (COVER)

Item	Part No.	Description	Qty	Options
1	418-926-3711	COVER	1	SN:B10001--
2	424-926-3240	FINISHER	1	SN:B10001--
3	424-926-3230	FINISHER	1	SN:B10001--
4	01225-70620	SCREW	2	SN:B10001--
5	23S-55-51970	WASHER	2	SN:B10001--
6	01010-80616	BOLT	1	SN:B10001--
7	01643-30623	WASHER	1	SN:B10001--
8	418-926-3722	COVER	1	SN:B10001--
9	424-926-3240	FINISHER	1	SN:B10001--
10	424-926-3230	FINISHER	1	SN:B10001--
11	22T-56-13210	SEAL	1	SN:B10001--
12	01225-70620	SCREW	2	SN:B10001--
13	23S-55-51970	WASHER	2	SN:B10001--
14	01010-80616	BOLT	1	SN:B10001--
15	01643-30623	WASHER	1	SN:B10001--
16	20Y-06-23472	LIGHTER	1	SN:B10001--
17	424-926-3280	BRACKET	1	SN:B10001--
18	421-09-21460	SCREW	2	SN:B10001--
19	20Y-06-21751	ASHTRAY	1	SN:B10001--

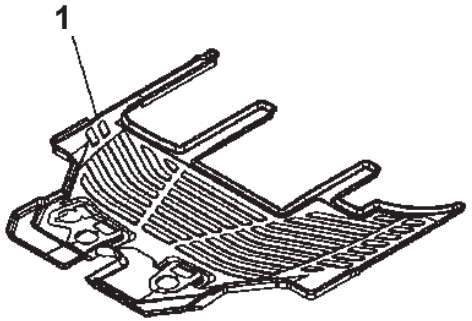

00002620

FLOOR MAT

Item	Part No.	Description	Qty	Options
1	418-54-32412	MAT	1	SN:B10001--

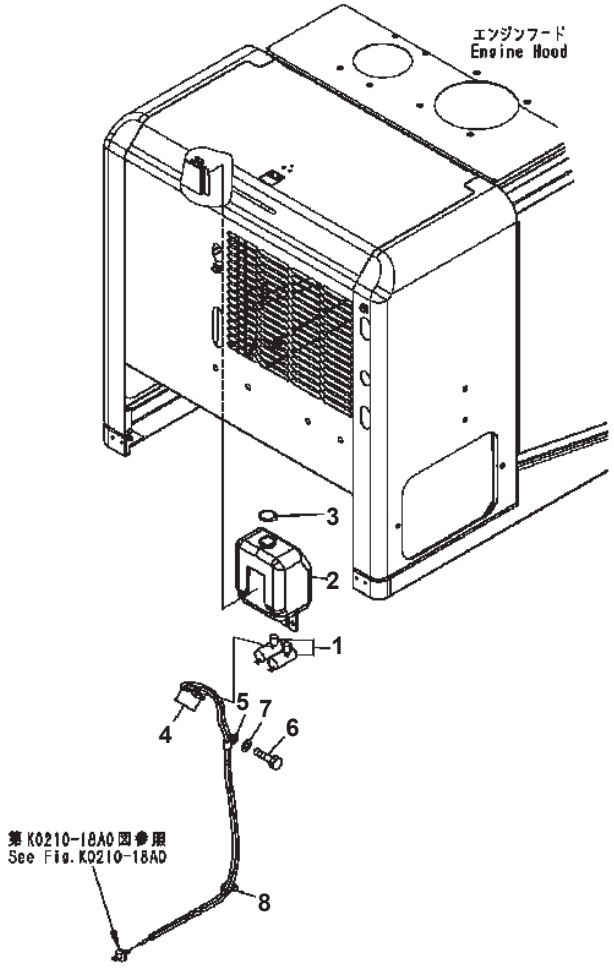

WINDOW WASHER

Item	Part No.	Description	Qty	Options
	423-947-1101	TANK ASS'Y	1	SN:B10001--
1	423-947-1110	・ PUMP ASS'Y	2	SN:B10001--
2	423-947-1121	・ TANK	1	SN:B10001--
3	423-947-2150	・・ CAP	1	SN:B10001--
4	419-07-36120	HOSE	2	SN:B10001--
5	04435-50810	CLIP	1	SN:B10001--
6	01010-81020	BOLT	1	SN:B10001--
7	01643-31032	WASHER	1	SN:B10001--
8	08034-20519	BAND	3	SN:B10001--

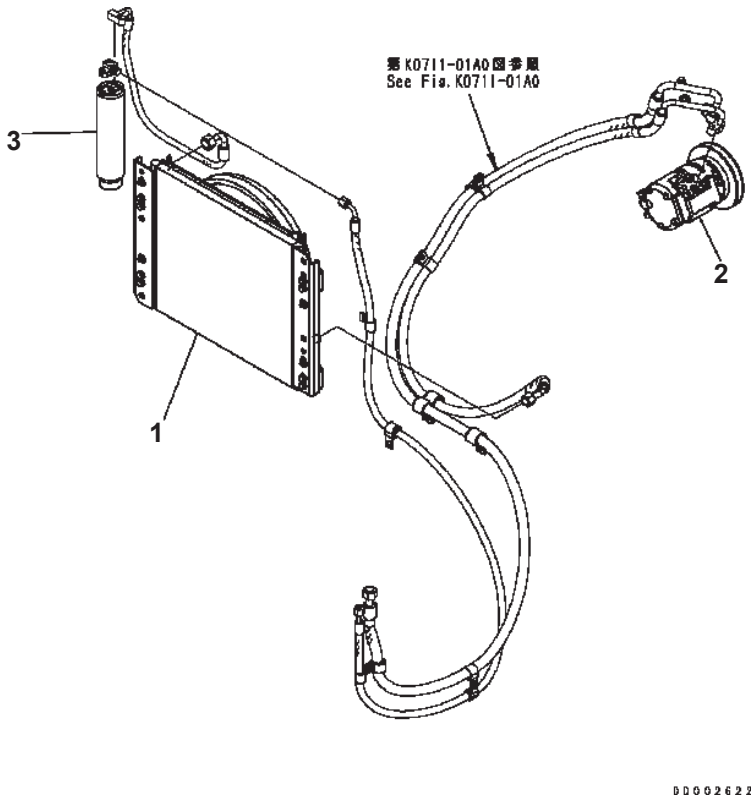

AIR CONDITIONER

Item	Part No.	Description	Qty	Options
	418-S62-3121	AIR CONDITIONER KIT	1	SN:B10001--
1	418-S62-3150	・ CONDENSER ASS'Y	1	SN:B10001--
	ND022740-3990	・・ BLOWER ASS'Y	1	SN:B10001--
	ND263500-0763	・・ MOTOR ASS'Y	1	SN:B10001--
2	418-S62-3161	・ COMPRESSOR ASS'Y	1	SN:B10021--
	418-S62-3160	・ COMPRESSOR ASS'Y	1	SN:B10001--B10020
3	20Y-979-3120	・ TANK	1	SN:B10001--

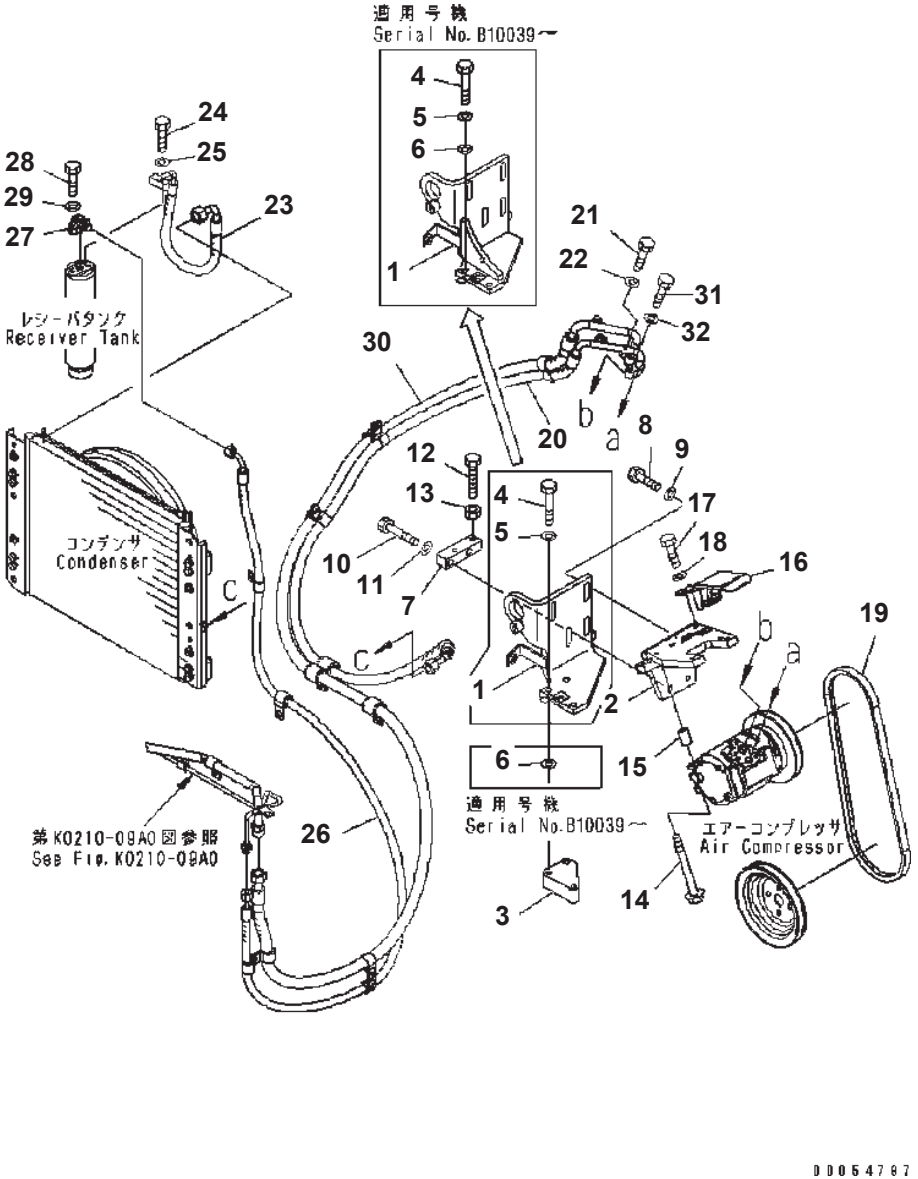

AIR CONDITIONER (MOUNTING AND PIPING)

Item	Part No.	Description	Qty	Options
1	418-S62-3175	BRACKET	1	SN:B10039--
	418-S62-3173	BRACKET	1	SN:B10001--B10038
2	418-S62-3183	BRACKET	1	SN:B10001--
3	11Y-01-11280	SPACER	1	SN:B10001--
4	01010-81080	BOLT	3	SN:B10039--
	01010-81065	BOLT	3	SN:B10001--B10038
5	01643-31032	WASHER	3	SN:B10001--
6	01643-31032	WASHER	6	SN:B10039--
	01643-31032	WASHER	3	SN:B10001--B10038
7	418-S62-3340	BLOCK	1	SN:B10001--
8	01010-81240	BOLT	2	SN:B10039--
	01010-81235	BOLT	2	SN:B10001--B10038
9	01643-31232	WASHER	2	SN:B10001--
10	01010-810270	BOLT	2	SN:B10039--
	01010-81265	BOLT	2	SN:B10001--B10038
11	01643-31232	WASHER	2	SN:B10001--
12	01016-51090	BOLT	2	SN:B10001--
13	01580-11008	NUT	2	SN:B10001--
14	6202-81-6810	BOLT	4	SN:B10001--
15	418-S62-3310	SPACER	4	SN:B10001--
16	418-S62-3291	COVER	1	SN:B10001--
17	01010-81020	BOLT	2	SN:B10001--
18	01643-31032	WASHER	2	SN:B10001--
19	04120-21744	V-BELT	1	SN:B10001--
20	419-S62-3231	HOSE	1	SN:B10001--
	20Y-979-3140	・ O-RING	2	SN:B10001--
21	01010-80630	BOLT	1	SN:B10001--
22	01643-30623	WASHER	1	SN:B10001--
23	418-S62-3251	HOSE	1	SN:B10001--
24	01010-80625	BOLT	1	SN:B10001--
25	01643-30623	WASHER	1	SN:B10001--
26	419-S62-3244	HOSE	1	SN:B10001--
	20Y-979-3150	・ O-RING	2	SN:B10001--
27	17A-911-1671	JOINT	1	SN:B10001--
	20Y-979-3150	・ O-RING	1	SN:B10001--
28	01010-80625	BOLT	1	SN:B10001--
29	01643-30623	WASHER	1	SN:B10001--
30	419-S62-3223	HOSE	1	SN:B10001--
	20Y-979-3130	・ O-RING	1	SN:B10001--
31	01010-80630	BOLT	1	SN:B10001--

AIR CONDITIONER (MOUNTING AND PIPING)

Item	Part No.	Description	Qty	Options
32	01643-30623	WASHER	1	SN:B10001--

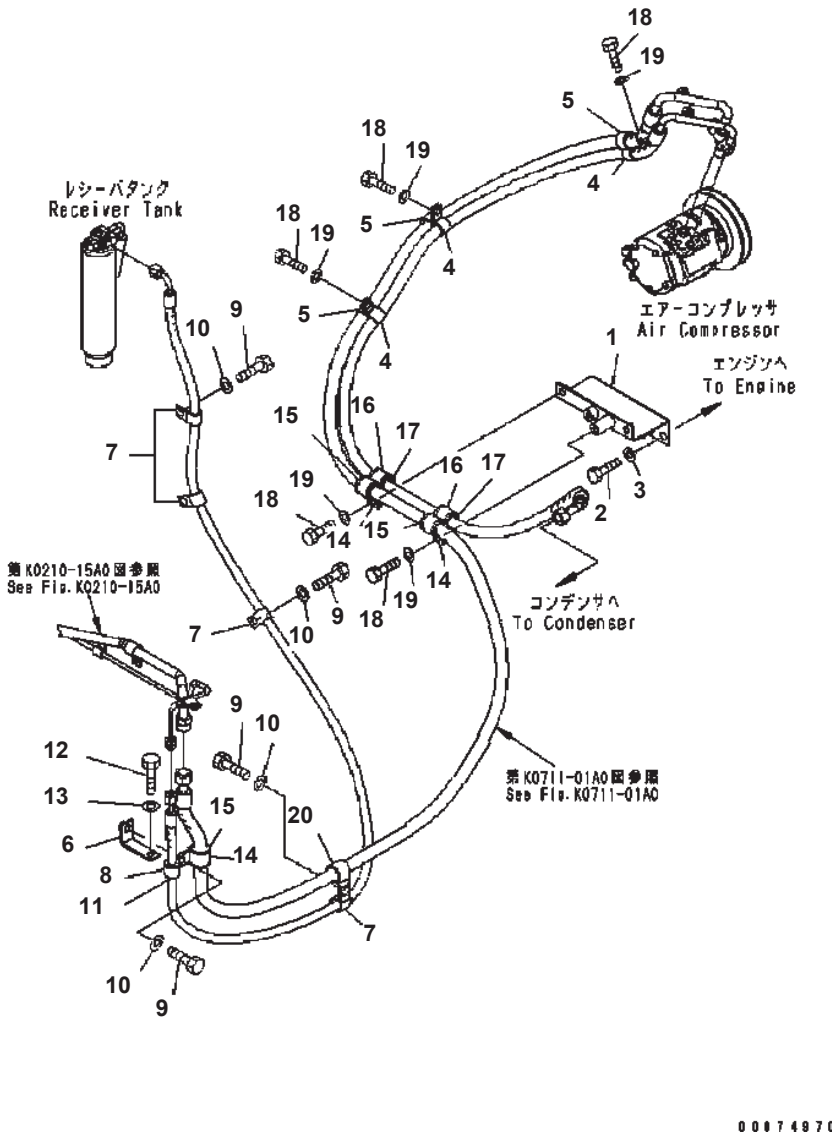

AIR CONDITIONER (PIPING)

Item	Part No.	Description	Qty	Options
1	418-07-32113	BRACKET	1	SN:B10001--
2	01010-81220	BOLT	2	SN:B10001--
3	01643-31232	WASHER	2	SN:B10001--
4	04434-51912	CLIP	3	SN:B10001--
5	04434-52112	CLIP	3	SN:B10001--
6	417-07-22380	PLATE	1	SN:B10001--
7	04434-51612	CLIP	4	SN:B10001--
8	04434-52112	CLIP	1	SN:B10001--
9	01010-81020	BOLT	5	SN:B10001--
10	01643-31032	WASHER	5	SN:B10001--
11	07095-20314	CUSHION	1	SN:B10001--
12	01010-81020	BOLT	1	SN:B10001--
13	01643-31032	WASHER	1	SN:B10001--
14	04434-52712	CLIP	3	SN:B10001--
15	07095-20420	CUSHION	3	SN:B10001--
16	04434-52512	CLIP	2	SN:B10001--
17	07095-20318	CUSHION	2	SN:B10001--
18	01010-81025	BOLT	5	SN:B10001--
19	01643-31032	WASHER	5	SN:B10001--
20	04434-52112	CLIP	1	SN:B10001--

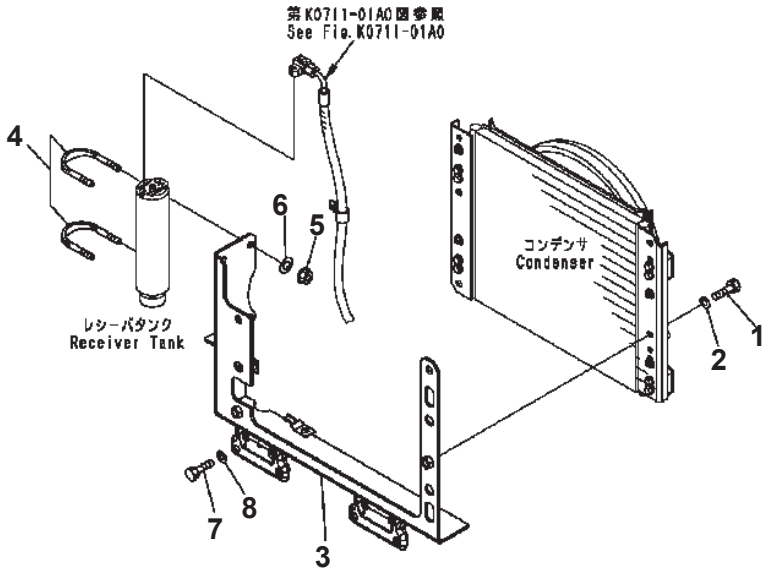

AIR CONDITIONER (CONDENSER MOUNTING)

Item	Part No.	Description	Qty	Options
1	01010-81225	BOLT	4	SN:B10001--
2	01643-31232	WASHER	4	SN:B10001--
3	418-S62-3322	BRACKET	1	SN:B10001--
4	07283-26155	CLIP	2	SN:B10001--
5	01597-01009	NUT	4	SN:B10001--
6	01643-31032	WASHER	4	SN:B10001--
7	01010-81225	BOLT	4	SN:B10001--
8	01643-31232	WASHER	4	SN:B10001--

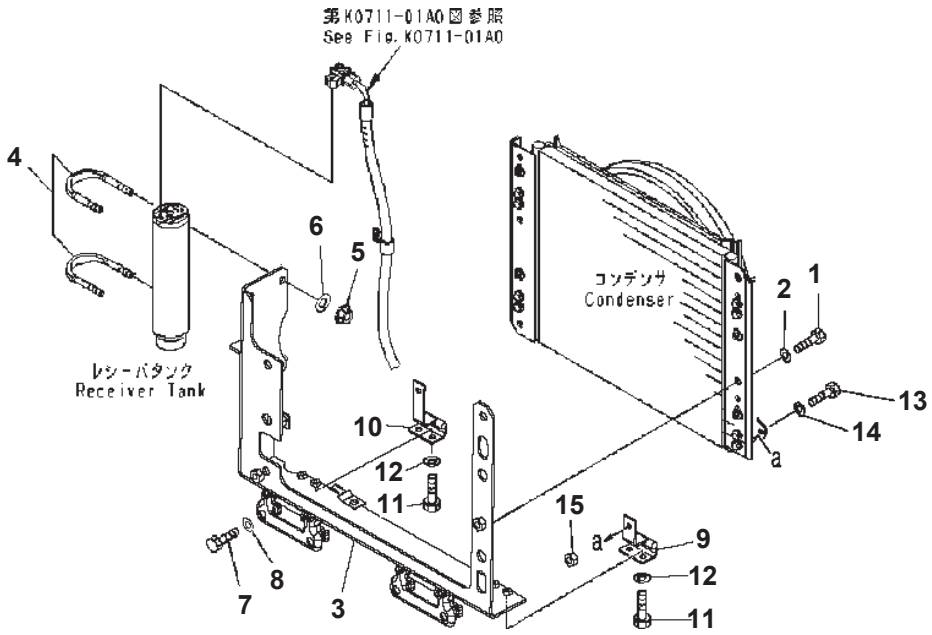

AIR CONDITIONER (CONDENSER MOUNTING) (FOR SUGAR CANE) (#B10235-)

Item	Part No.	Description	Qty	Options
1	01010-81225	BOLT	4	SN:B10235--
2	01643-31232	WASHER	4	SN:B10235--
3	418-S62-B110	BRACKET	1	SN:B10235--
4	07283-26155	CLIP	2	SN:B10235--
5	01597-01009	NUT	4	SN:B10235--
6	01643-31032	WASHER	4	SN:B10235--
7	01010-81225	BOLT	4	SN:B10235--
8	01643-31232	WASHER	4	SN:B10235--
9	418-S62-B120	HINGE	1	SN:B10235--
10	418-S62-B130	HINGE	1	SN:B10235--
11	01010-80820	BOLT	4	SN:B10235--
12	01643-30823	WASHER	4	SN:B10235--
13	01010-80816	BOLT	2	SN:B10289--
14	01643-30823	WASHER	2	SN:B10289--
15	01580-00806	NUT	2	SN:B10289--

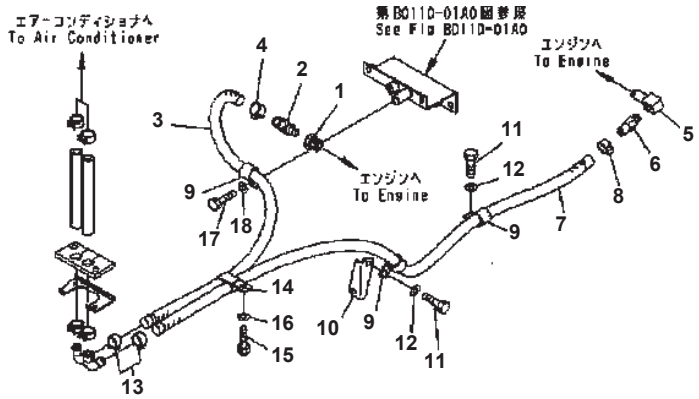

HEATER PIPING

Item	Part No.	Description	Qty	Options
1	124-Z11-1530	ADAPTER	1	SN:B10001--
2	567-07-15222	ELBOW	1	SN:B10142--
	◆567-07-15221	HOSE JOINT	1	SN:B10001--B10141
3	09483-10511	HOSE	1	SN:B10001--
4	09479-02400	CLAMP	1	SN:B10001--
5	418-07-25130	ELBOW	1	SN:B10001--
6	416-942-1560	CONNECTOR	1	SN:B10001--
7	09483-10516	HOSE	1	SN:B10001--
8	09479-02400	CLAMP	1	SN:B10001--
9	04434-52312	CLIP	3	SN:B10001--
10	418-07-31160	BRACKET	1	SN:B10001--
11	01010-81020	BOLT	2	SN:B10001--
12	01643-31032	WASHER	2	SN:B10001--
13	09479-02400	CLAMP	2	SN:B10001--
14	421-07-11550	CLIP	1	SN:B10001--
15	01010-81020	BOLT	1	SN:B10001--
16	01643-31032	WASHER	1	SN:B10001--
17	01010-81020	BOLT	1	SN:B10001--
18	01643-31032	WASHER	1	SN:B10001--

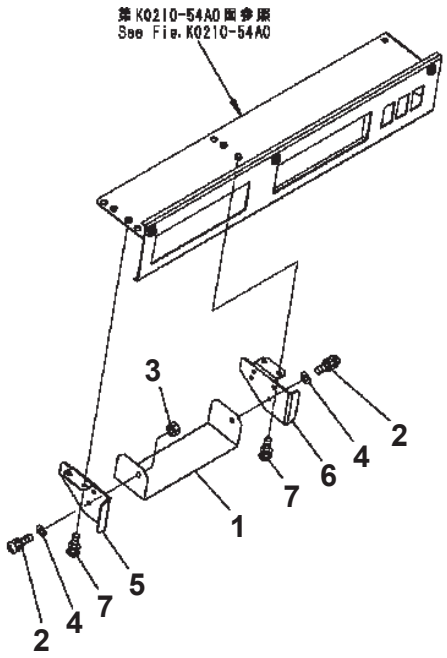

00013053

RADIO (COVER) (FOR EXCEPT JAPAN)

Item	Part No.	Description	Qty	Options
1	421-925-3510	COVER {RADIO}	1	SN:B10001--
2	01023-60412	SCREW	2	SN:B10001--
3	01580-10403	NUT	2	SN:B10001--
4	01640-20408	WASHER	2	SN:B10001--
5	418-925-3471	PLATE	1	SN:B10001--
6	418-925-3481	PLATE	1	SN:B10001--
7	01023-10510	SCREW	4	SN:B10001--

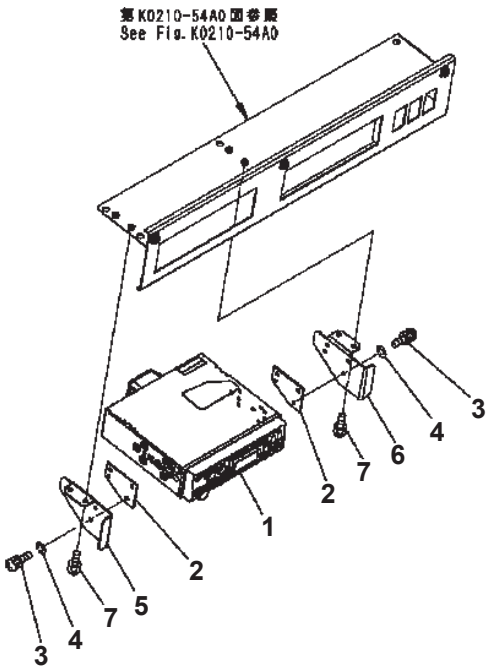

RADIO (AM, FM) (CASSETE)

Item	Part No.	Description	Qty	Options
1	425-S67-2162	CASSETTE STEREO	1	SN:B10001--
	425-S67-2180	· KNOB KIT	1	SN:B10001--
	08040-00300	· FUSE¤ 3A	1	SN:B10001--
	08040-00100	· FUSE¤ 1A	1	SN:B10001--
2	421-925-3140	PLATE	2	SN:B10001--
3	01023-60412	SCREW	4	SN:B10001--
4	01601-20410	WASHER	2	SN:B10001--
5	418-925-3471	PLATE	1	SN:B10001--
6	418-925-3481	PLATE	1	SN:B10001--
7	01023-10510	SCREW	4	SN:B10001--

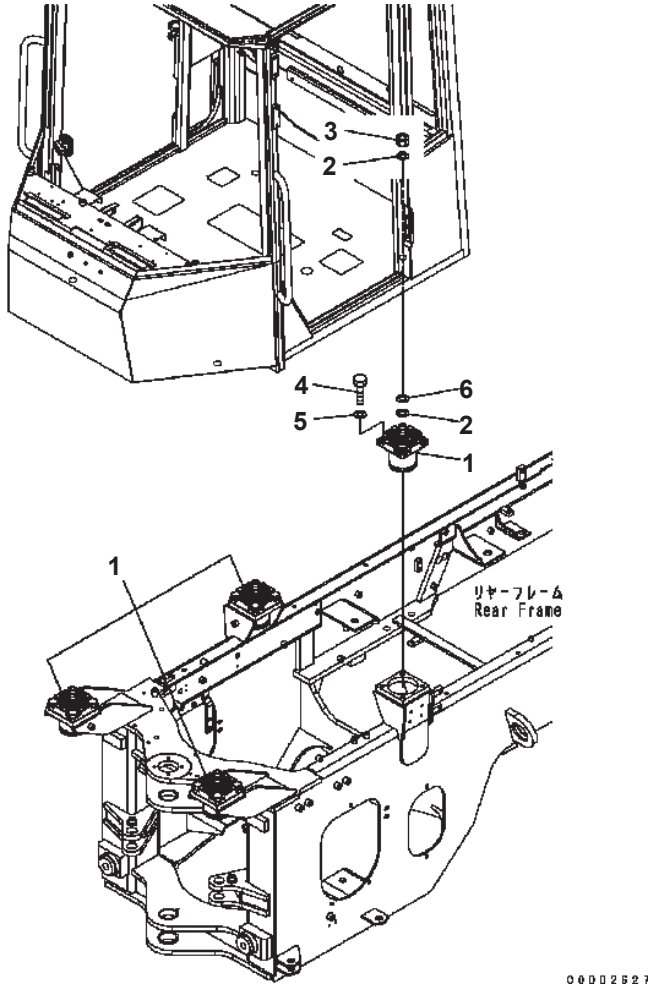

FLOOR SUPPORT

Item	Part No.	Description	Qty	Options
1	418-54-33111	VISCOUS MOUNT	4	SN:B10532--
	□418-54-33110	VISCOUS MOUNT	4	SN:B10001--B10531
2	01643-32460	WASHER	8	SN:B10001--
3	01596-02419	NUT	4	SN:B10001--
4	01010-81845	BOLT	16	SN:B10001--
5	01643-31845	WASHER	16	SN:B10001--
6	561-40-41210	SHIM¤ 1.2MM	4	SN:B10001--

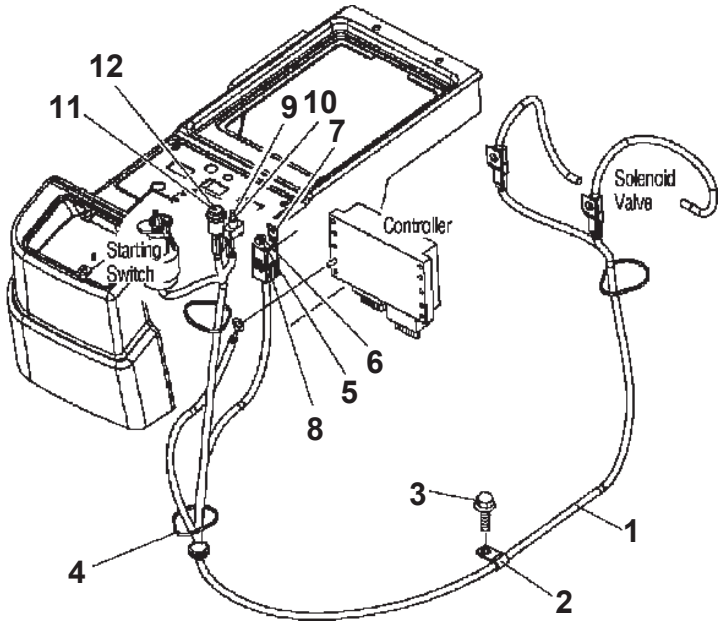

AUTO-REVERSE FAN CONTROL (FOR SUGAR CANE) (#B10186-B10234)

Item	Part No.	Description	Qty	Options
1	419-06-B3131	WIRING HARNESS	1	SN:B10186--B10234
2	04434-51008	CLIP	1	SN:B10186--B10234
3	01435-01016	BOLT	1	SN:B10186--B10234
4	08034-20519	BAND	9	SN:B10186--B10234
5	01010-80616	BOLT	1	SN:B10186--B10234
6	01643-30623	WASHER	1	SN:B10186--B10234
7	287-06-16420	BRACKET	1	SN:B10186--B10234
8	419-09-11380	CONNECTOR	1	SN:B10186--B10234
9	419-06-B3120	SWITCH	1	SN:B10186--B10234
10	417-06-B1280	CAP	1	SN:B10186--B10234
11	417-06-B1130	INDICATOR	1	SN:B10186--B10234
12	419-06-B5110	LAMP	1	SN:B10186--B10234

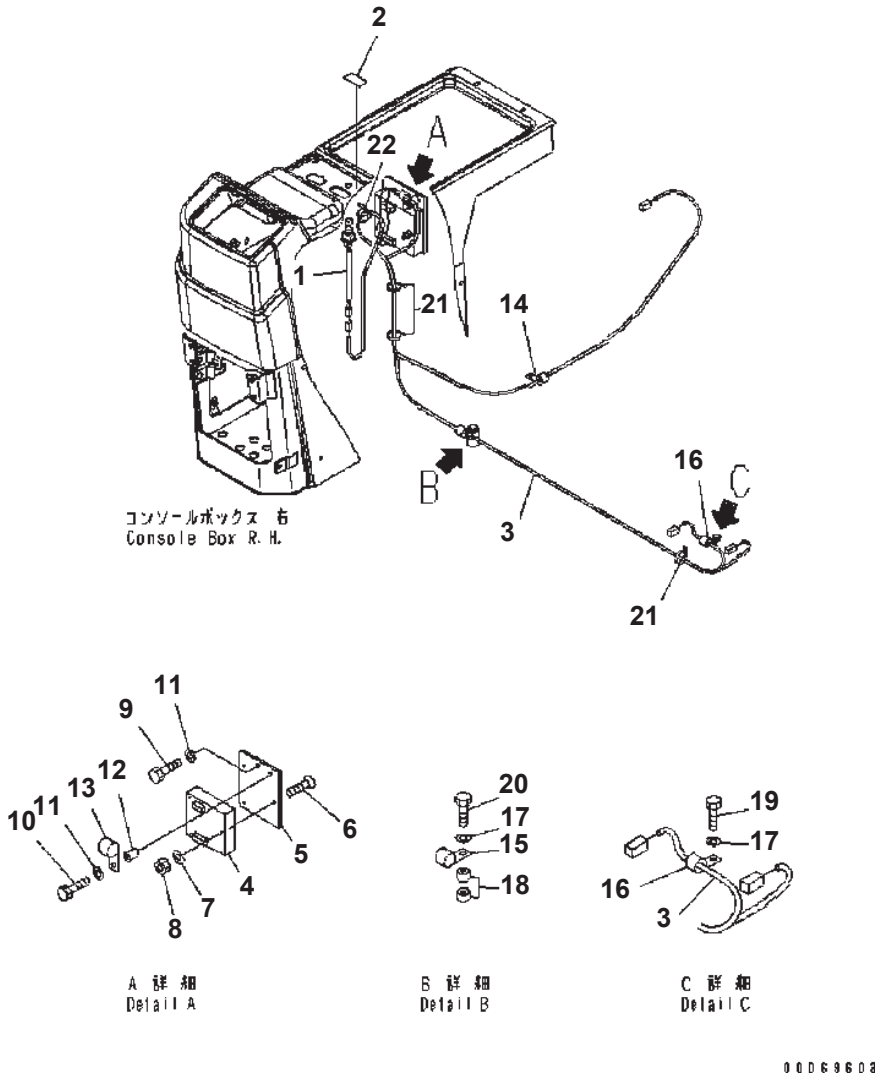

AUTO-REVERSE FAN CONTROL (FOR SUGAR CANE) (#B10235-)

Item	Part No.	Description	Qty	Options
1	418-06-B1010	SWITCH ASS'Y	1	SN:B10235--
2	421-93-B1010	LABEL	1	SN:B10235--
3	418-06-B1060	HARNESS	1	SN:B10235--
	417-06-A1360	· FUSE HOLDER	1	SN:B10235--
	08041-00500	· FUSE, 5A	1	SN:B10235--
4	418-06-B1020	CONTROLLER	1	SN:B10235--
5	418-06-B1030	PLATE	1	SN:B10235--
6	418-06-B1040	SCREW	3	SN:B10235--
7	01641-20305	WASHER	3	SN:B10235--
8	01580-10302	NUT	3	SN:B10235--
9	01010-80616	BOLT	1	SN:B10235--
10	14X-43-31350	BOLT	1	SN:B10500--
	□01010-80640	BOLT	1	SN:B10235--B10499
11	01643-30623	WASHER	2	SN:B10235--
12	418-06-B1051	SPACER	1	SN:B10369--
	□418-06-B1050	SPACER	1	SN:B10235--B10368
13	04434-51608	CLIP	1	SN:B10235--
14	04434-51008	CLIP	1	SN:B10235--
15	04434-51010	CLIP	2	SN:B10235--
16	04434-51012	CLIP	1	SN:B10235--
17	01643-31032	WASHER	3	SN:B10235--
18	01571-01016	SEAT	2	SN:B10235--
19	01010-81025	BOLT	2	SN:B10235--
20	01010-81050	BOLT	1	SN:B10235--
21	08034-20519	BAND	4	SN:B10235--
22	08059-00310	CLIP	1	SN:B10235--

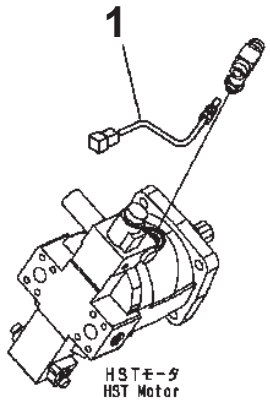

00002629

GAUGE AND SENSOR

Item	Part No.	Description	Qty	Options
1	7861-92-3320	SENSOR	1	SN:B10001--

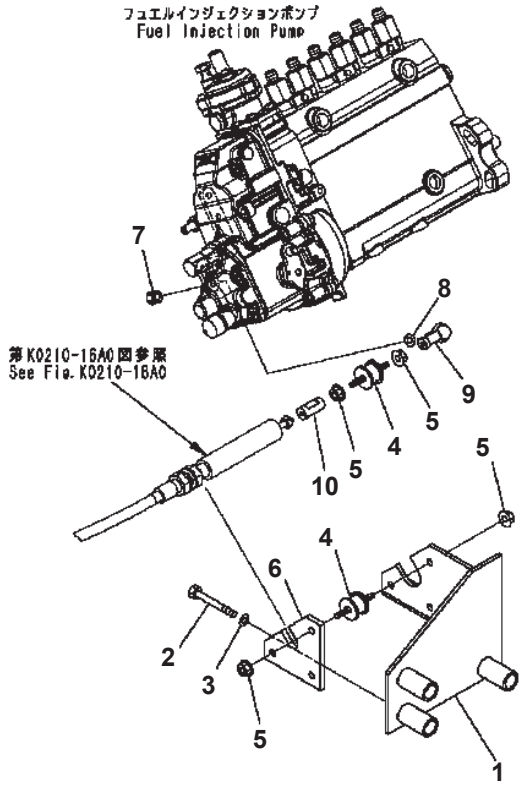

00002598

ENGINE CONTROL

Item	Part No.	Description	Qty	Options
1	418-43-31113	BRACKET	1	SN:B10001--
2	01010-80855	BOLT	3	SN:B10001--
3	01643-30823	WASHER	3	SN:B10001--
4	424-43-11240	CUSHION	4	SN:B10001--
5	01584-00605	NUT	8	SN:B10001--
6	421-43-11261	PLATE	1	SN:B10001--
7	01596-00606	NUT	1	SN:B10001--
8	01643-30623	WASHER	1	SN:B10001--
9	04256-40615	JOINT	1	SN:B10001--
10	421-43-11330	ROD	1	SN:B10001--

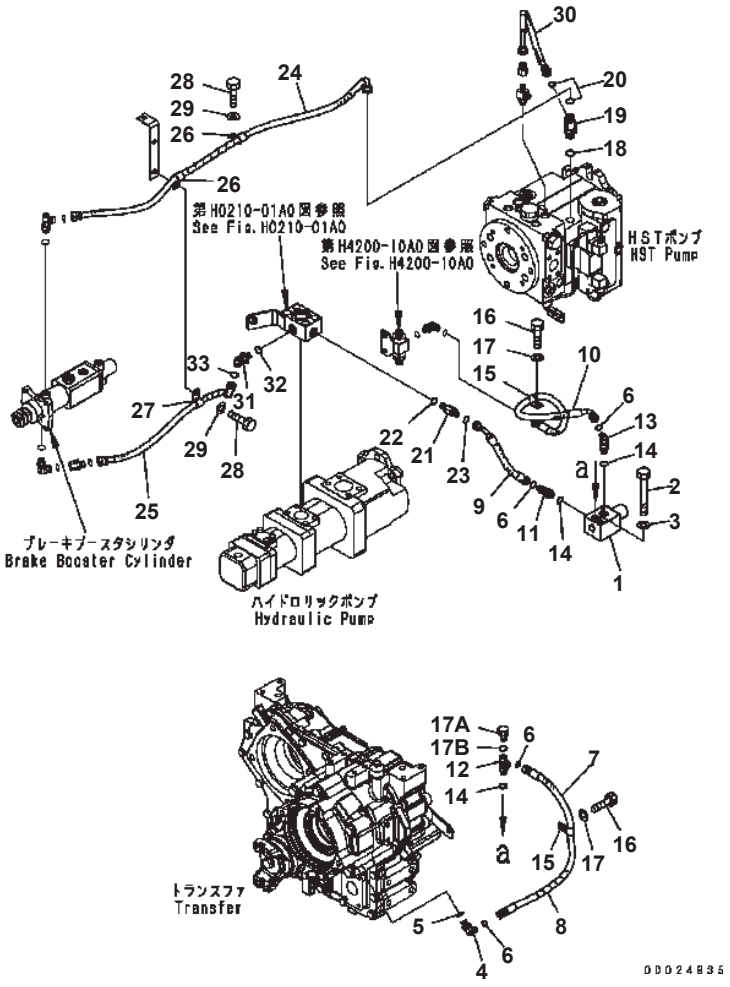

INCHING CONTROL

Item	Part No.	Description	Qty	Options
1	417-18-31111	SOLENOID VALVE ASS'Y {CLUTCH}	1	SN:B10001--
2	01010-80870	BOLT	2	SN:B10001--
3	01643-30823	WASHER	2	SN:B10001--
4	02782-10210	ELBOW	1	SN:B10001--
5	07002-11423	O-RING	1	SN:B10001--
6	02896-11008	O-RING	4	SN:B10001--
7	419-18-31342	HOSE	1	SN:B10001--
8	08210-00602	· SPIRAL TUBE	1	SN:B10001--
9	419-18-31361	HOSE	1	SN:B10001--
10	419-18-31391	HOSE	1	SN:B10001--
11	21W-62-43980	ELBOW	1	SN:B10001--
12	418-18-31111	ELBOW	1	SN:B10001--
13	21W-62-43970	ELBOW	1	SN:B10001--
14	07000-12011	O-RING	3	SN:B10001--
15	04434-51210	CLIP	2	SN:B10001--
16	01010-81020	BOLT	2	SN:B10001--
17	01643-31032	WASHER	2	SN:B10001--
17A	07040-11007	PLUG	1	SN:B10001--
17B	07002-11023	O-RING	1	SN:B10001--
18	07000-12018	O-RING	1	SN:B10001--
19	419-18-31510	TEE	1	SN:B10001--
20	02896-11009	O-RING	2	SN:B10001--
21	20U-62-41890	NIPPLE	1	SN:B10001--
22	07002-11423	O-RING	1	SN:B10001--
23	02896-11008	O-RING	1	SN:B10001--
24	419-18-31312	HOSE	1	SN:B10001--
25	419-18-31322	HOSE	1	SN:B10001--
26	04434-51610	CLIP	2	SN:B10001--
27	04434-51510	CLIP	1	SN:B10001--
28	01010-81020	BOLT	2	SN:B10001--
29	01643-31032	WASHER	2	SN:B10001--
30	02761-003A3	HOSE	1	SN:B10001--
31	11Y-62-12510	ELBOW	1	SN:B10001--
32	07002-11423	O-RING	1	SN:B10001--
33	02896-11009	O-RING	1	SN:B10001--

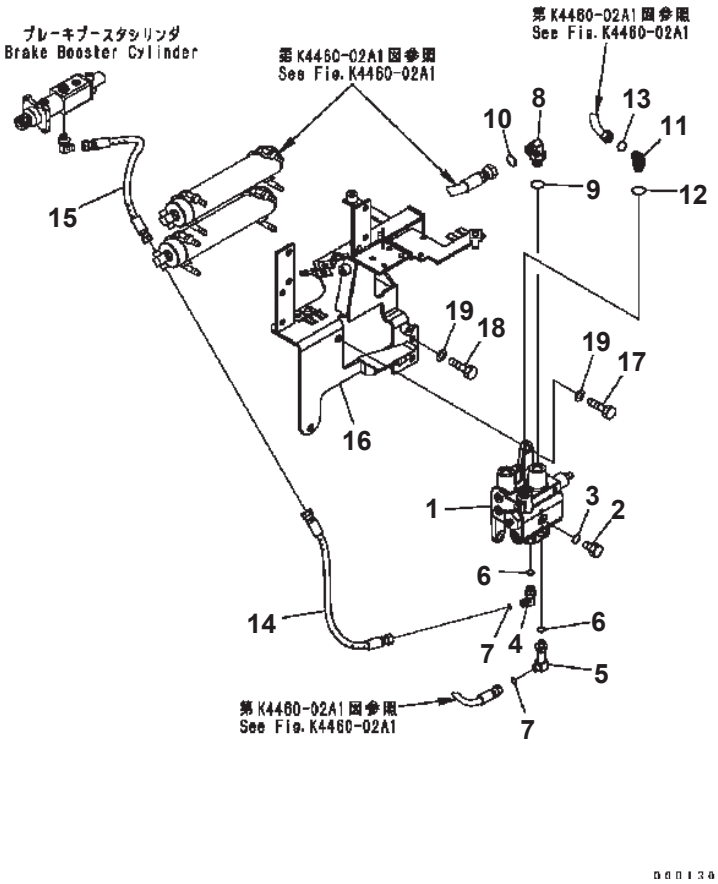

BRAKE CONTROL (CHARGE VALVE)

Item	Part No.	Description	Qty	Options
1	419-43-37203	VALVE	1	SN:B10001--
2	07040-11007	PLUG	1	SN:B10001--
3	07002-11023	O-RING	1	SN:B10001--
4	21W-62-43980	ELBOW	1	SN:B10001--
5	21W-62-43990	ELBOW	1	SN:B10001--
6	07000-12011	O-RING	2	SN:B10001--
7	02896-11008	O-RING	2	SN:B10001--
8	418-62-35111	ELBOW	1	SN:B10001--
9	07000-12018	O-RING	1	SN:B10001--
10	02896-11012	O-RING	1	SN:B10001--
11	419-43-37160	ELBOW	1	SN:B10001--
12	07000-12014	O-RING	1	SN:B10001--
13	02896-11009	O-RING	1	SN:B10001--
14	419-43-37651	HOSE	1	SN:B10001--
15	02765-B02A5	HOSE	1	SN:B10001--
16	419-43-37225	BRACKET	1	SN:B10001--
17	01010-81230	BOLT	2	SN:B10001--
18	01010-81225	BOLT	6	SN:B10001--
19	01643-31232	WASHER	8	SN:B10001--

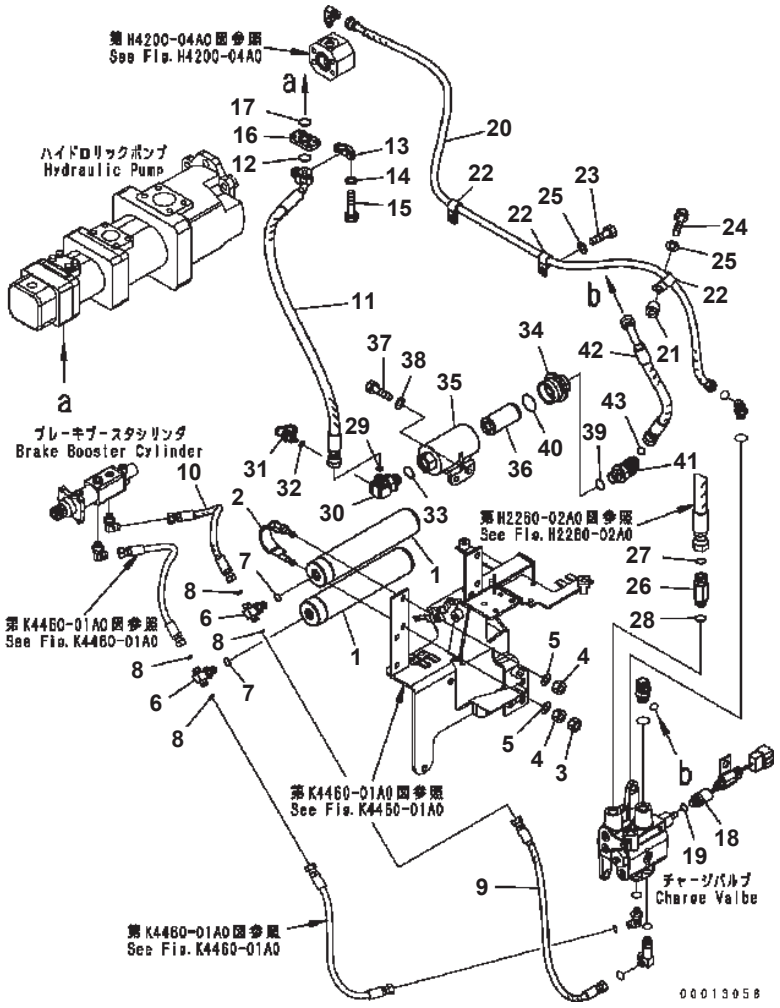

WA320-5 S/N B10001-UP

BRAKE CONTROL (ACUMULATOR)

Item	Part No.	Description	Qty	Options
1	418-43-37401	ACCUMULATOR	2	SN:B10001--
2	417-43-37140	CLIP	4	SN:B10001--
3	01582-11008	NUT	4	SN:B10001--
4	01582-11008	NUT	8	SN:B10001--
5	01643-31032	WASHER	8	SN:B10001--
6	417-43-37410	TEE	2	SN:B10001--
7	07000-12011	O-RING	2	SN:B10001--
8	02896-11008	O-RING	4	SN:B10001--
9	02765-B02A5	HOSE	1	SN:B10001--
10	419-43-37111	HOSE	1	SN:B10001--
11	419-43-37230	HOSE	1	SN:B10001--
12	07000-13025	O-RING	1	SN:B10001--
13	07371-30638	FLANGE	2	SN:B10001--
14	01643-50823	WASHER	4	SN:B10001--
15	01010-80840	BOLT	4	SN:B10001--
16	07373-30600	SPACER	1	SN:B10001--
17	07000-13025	O-RING	1	SN:B10001--
18	421-43-22912	SWITCH	1	SN:B10001--
19	07002-11423	O-RING	1	SN:B10001--
20	419-43-37141	HOSE	1	SN:B10001--
21	201-03-29160	SPACER	1	SN:B10001--
22	04434-51610	CLIP	3	SN:B10001--
23	01010-81025	BOLT	2	SN:B10001--
24	01010-81035	BOLT	1	SN:B10001--
25	01643-31032	WASHER	3	SN:B10001--
26	419-43-37150	UNION	1	SN:B10001--
27	02896-11015	O-RING	1	SN:B10001--
28	07000-12018	O-RING	1	SN:B10001--
29	02896-11012	O-RING	1	SN:B10001--
30	419-43-37291	ELBOW	1	SN:B10001--
31	799-101-5220	NIPPLE	1	SN:B10001--
32	07002-11023	O-RING	1	SN:B10001--
33	07002-12434	O-RING	1	SN:B10001--
34	421-43-22571	CAP	1	SN:B10001--
35	421-43-22562	CASE	1	SN:B10001--
36	421-43-27920	ELEMENT	1	SN:B10001--
37	01010-81025	BOLT	2	SN:B10001--
38	01643-31032	WASHER	2	SN:B10001--
39	07002-15234	O-RING	1	SN:B10001--
40	07002-12434	O-RING	1	SN:B10001--

Ref. K4460-02A1 Page 240970

WA320-5 S/N B10001-UP

BRAKE CONTROL (ACUMULATOR)

Item	Part No.	Description	Qty	Options
41	11Y-62-12630	ELBOW	1	SN:B10001--
42	02766-004A3	HOSE	1	SN:B10001--
43	02896-11012	O-RING	1	SN:B10001--

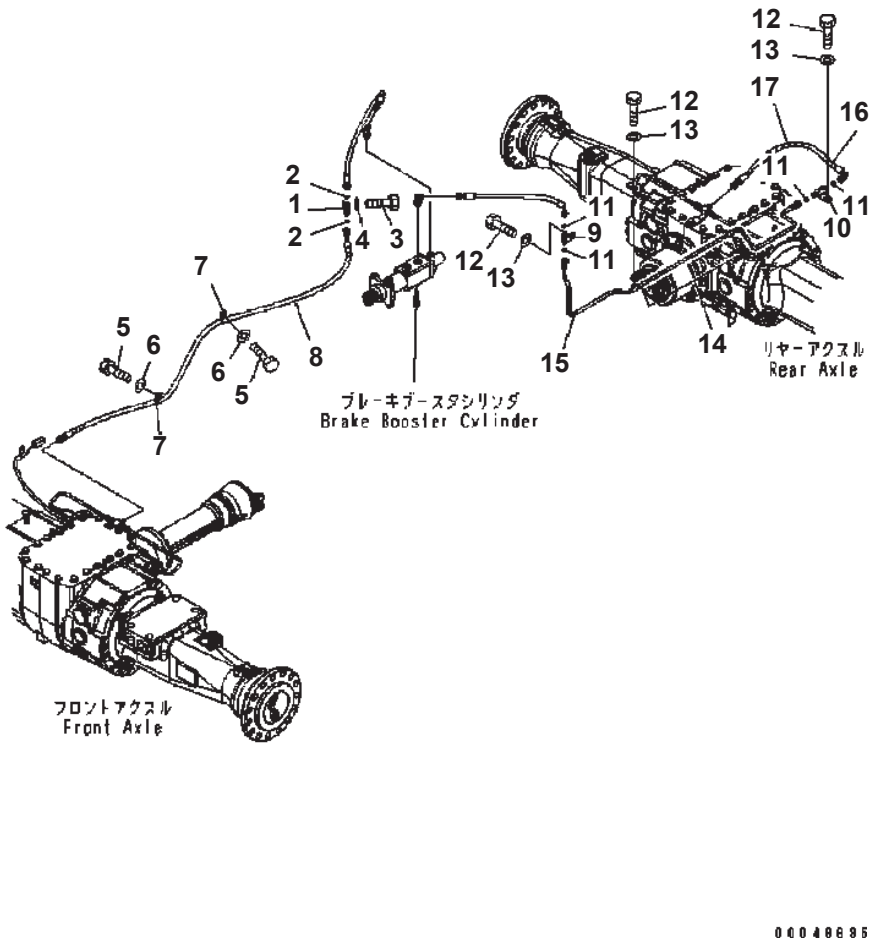

BRAKE CONTROL (BRAKE PIPING)

Item	Part No.	Description	Qty	Options
1	418-43-37860	JOINT	1	SN:B10001--
2	02896-11009	O-RING	2	SN:B10001--
3	01010-81025	BOLT	1	SN:B10001--
4	01643-31032	WASHER	1	SN:B10001--
5	01010-81020	BOLT	2	SN:B10001--
6	01643-31032	WASHER	2	SN:B10001--
7	04434-51310	CLIP	2	SN:B10001--
8	419-43-37512	HOSE	1	SN:B10001--
9	416-43-37420	JOINT	1	SN:B10001--
10	419-43-37870	JOINT	1	SN:B10001--
11	02896-11009	O-RING	4	SN:B10001--
12	01010-81020	BOLT	4	SN:B10001--
13	01643-31032	WASHER	4	SN:B10001--
14	04434-51510	CLIP	2	SN:B10007--
	04434-51010	CLIP	2	SN:B10001--B10006
15	419-43-371172	TUBE	1	SN:B10001--
16	419-43-37531	HOSE	1	SN:B10001--
17	08210-00604	・ SPIRAL TUBE	1	SN:B10001--

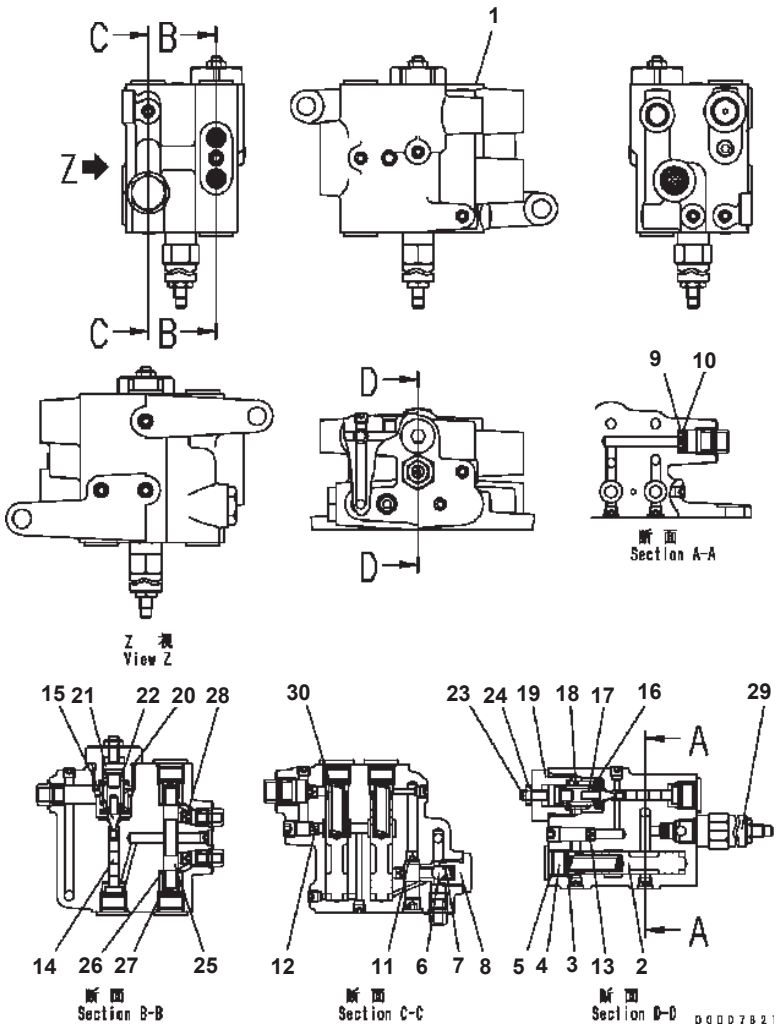

CHARGE VALVE (BRAKE) (INNER PARTS)

Item	Part No.	Description	Qty	Options
1	(419-43-37203)	VALVE	1	SN:B10001--
2	☆	· SPOOL	2	SN:B10001--
3	417-43-37530	· SPRING	1	SN:B10001--
4	417-43-37540	· PLUG	5	SN:B10001--
5	417-43-37550	· O-RING	6	SN:B10001--
6	417-43-37560	· PLUG	1	SN:B10001--
7	417-43-37570	· SPRING	1	SN:B10001--
8	417-43-37580	· PLUG	1	SN:B10001--
9	419-43-37591	· FILTER	1	SN:B10001--
10	417-43-37610	· O-RING	1	SN:B10001--
11	417-43-37620	· ORIFICE	1	SN:B10001--
12	419-43-37760	· ORIFICE	1	SN:B10001--
13	417-43-37640	· ORIFICE	3	SN:B10001--
14	417-43-37650	· PLUNGER	1	SN:B10001--
15	417-43-37660	· VALVE	1	SN:B10001--
16	417-43-37670	· SPRING	1	SN:B10001--
17	417-43-37680	· SPRING	1	SN:B10001--
18	417-43-37690	· SPRING	1	SN:B10001--
19	417-43-37710	· PLUG	1	SN:B10001--
20	417-43-37720	· O-RING	1	SN:B10001--
21	417-43-37730	· SEAT	1	SN:B10001--
22	417-43-37740	· O-RING	1	SN:B10001--
23	417-43-37750	· SCREW	1	SN:B10001--
24	417-43-37760	· NUT	1	SN:B10001--
25	☆	· SPOOL	1	SN:B10001--
26	417-43-37780	· WASHER	2	SN:B10001--
27	417-43-37790	· SPRING	2	SN:B10001--
28	419-43-37780	· ORIFICE	2	SN:B10001--
29	419-43-37791	· RELIEF VALVE	1	SN:B10001--
30	419-43-37770	· · SPRING	1	SN:B10001--

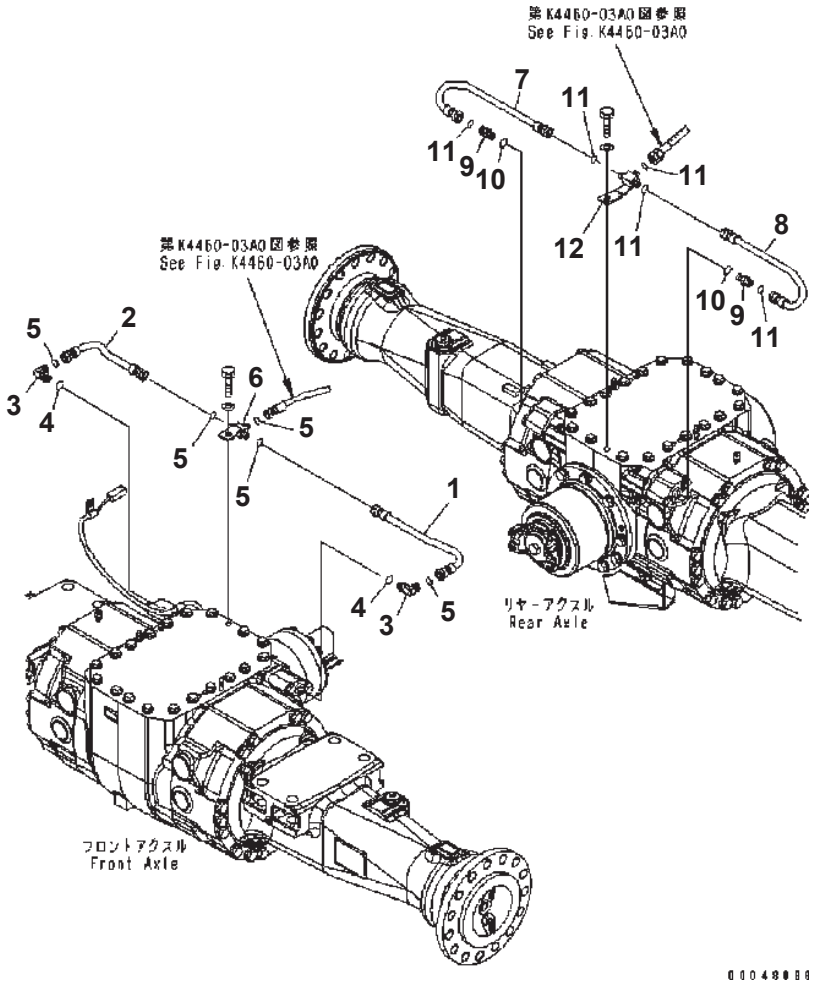

BRAKE PIPING

Item	Part No.	Description	Qty	Options
1	419-43-37410	TUBE	1	SN:B10001--
2	419-43-37420	TUBE	1	SN:B10001--
3	02782-10311	ELBOW	2	SN:B10001--
4	07002-11423	O-RING	2	SN:B10001--
5	02896-11009	O-RING	5	SN:B10001--
6	419-43-37561	TEE	1	SN:B10001--
7	419-43-37522	TUBE	1	SN:B10001--
8	419-43-37542	TUBE	1	SN:B10001--
9	02781-0031D	UNION	2	SN:B10001--
10	07002-11423	O-RING	2	SN:B10001--
11	02896-11009	O-RING	5	SN:B10001--
12	419-43-37551	TEE	1	SN:B10001--

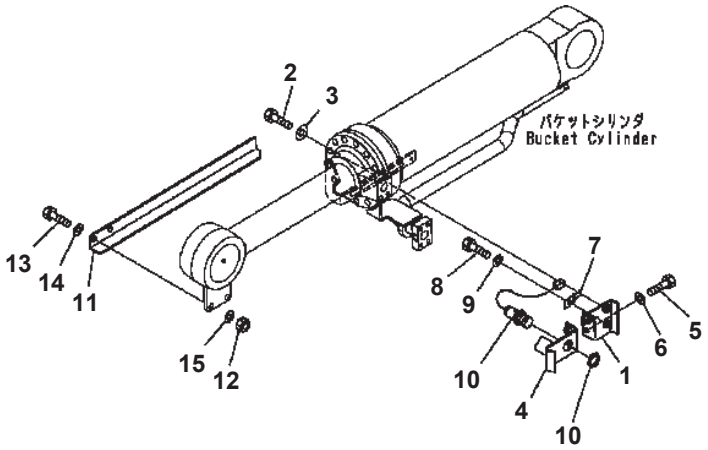

WA320-5 S/N B10001-UP

BUCKET POSITIONER

Item	Part No.	Description	Qty	Options
1	419-43-29110	BRACKET	1	SN:B10001--
2	01010-81230	BOLT	2	SN:B10001--
3	130-43-64260	COLLAR	2	SN:B10001--
4	421-43-29120	BRACKET	1	SN:B10001--
5	01010-81225	BOLT	2	SN:B10001--
6	01643-31232	WASHER	2	SN:B10001--
7	08193-20010	CLIP	1	SN:B10001--
8	01010-81016	BOLT	1	SN:B10001--
9	01643-31032	WASHER	1	SN:B10001--
10	56B-06-15610	SWITCH	1	SN:B10001--
11	419-44-31110	PLATE	1	SN:B10001--
12	01580-11210	NUT	2	SN:B10001--
13	01010-81235	BOLT	2	SN:B10001--
14	01643-31232	WASHER	2	SN:B10001--
15	01643-31232	WASHER	2	SN:B10001--

Ref. K4504-01A0 Page 241010

GUARDS AND COVERS

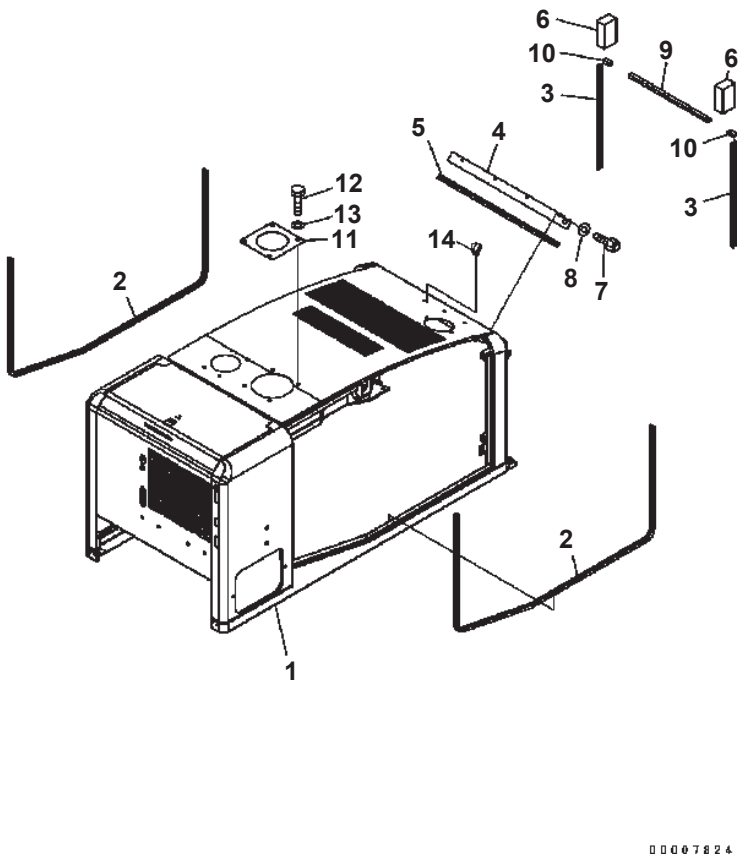

HOOD

Item	Part No.	Description	Qty	Options
1	419-54-B4122	HOOD ASS'Y	1	SN:B10183--
	□419-54-B4121	HOOD ASS'Y	1	SN:B10096--B10182
	□419-54-B4120	HOOD ASS'Y	1	SN:B10007--B10095
	419-54-31454	HOOD ASS'Y	1	SN:B10001--B10006
2	418-54-32480	SEAL	2	SN:B10001--
3	418-54-32490	SEAL	2	SN:B10001--
4	419-54-31360	PLATE	1	SN:B10001--
5	418-54-33260	SEAL	1	SN:B10001--
6	419-54-31820	SHEET	2	SN:B10001--
7	01010-80816	BOLT	4	SN:B10001--
8	01643-30823	WASHER	4	SN:B10001--
9	418-54-31990	SHEET	1	SN:B10001--
10	418-54-33250	SHEET	2	SN:B10001--
11	418-54-31481	COVER	1	SN:B10001--
12	01010-81220	BOLT	4	SN:B10001--
13	01643-31232	WASHER	4	SN:B10001--
14	07049-01012	PLUG	4	SN:B10017--

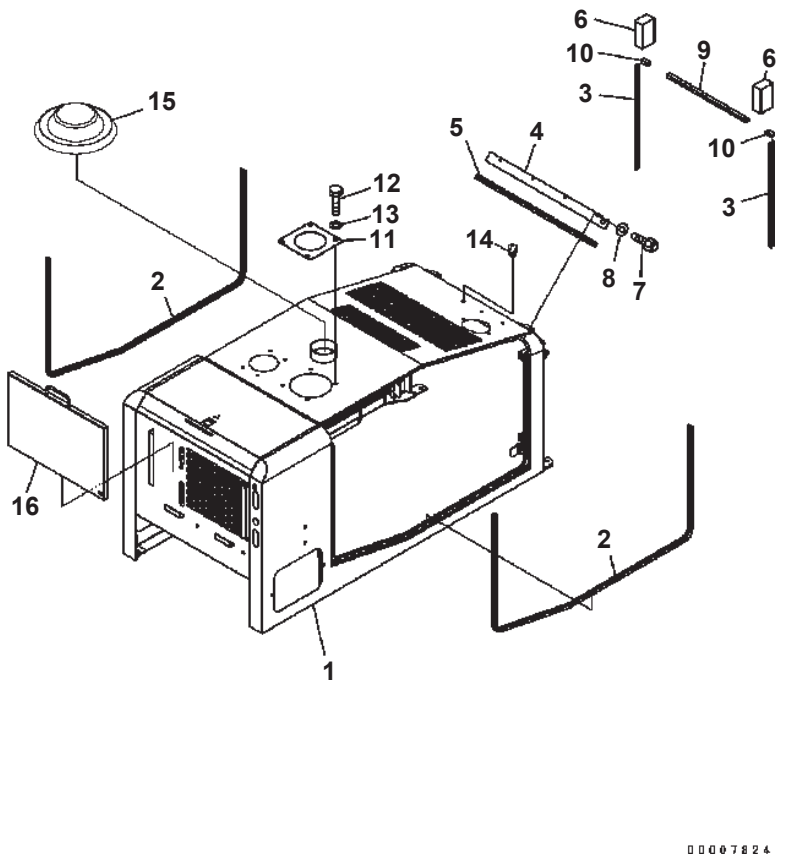

HOOD (FOR SUGAR CANE) (#B10235-)

Item	Part No.	Description	Qty	Options
1	419-54-B5500	HOOD ASS'Y	1	SN:B10235--
2	418-54-32480	SEAL	2	SN:B10235--
3	418-54-B2530	SEAL	2	SN:B10235--
4	419-54-B5360	PLATE	1	SN:B10235--
5	418-54-33260	SEAL	1	SN:B10235--
6	419-54-31820	SHEET	2	SN:B10235--
7	01010-80816	BOLT	4	SN:B10235--
8	01643-30823	WASHER	4	SN:B10235--
9	418-54-31990	SHEET	1	SN:B10235--
10	418-54-33250	SHEET	2	SN:B10235--
11	418-54-31481	COVER	1	SN:B10235--
12	01010-81220	BOLT	4	SN:B10235--
13	01643-31232	WASHER	4	SN:B10235--
14	07049-01012	PLUG	4	SN:B10235--
15	6090-01-9720	CAP	1	SN:B10235--
16	419-54-B5460	GRILL	1	SN:B10235--

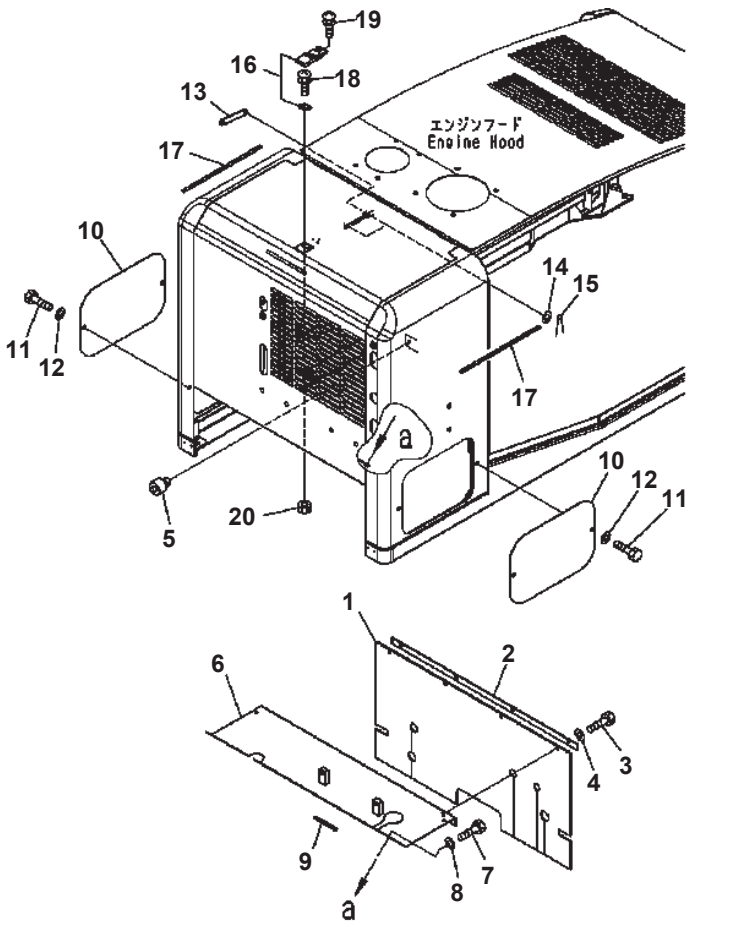

HOOD (BULK HEAD)

Item	Part No.	Description	Qty	Options
1	419-54-31186	SHEET	1	SN:B10001--
2	417-54-21431	PLATE	1	SN:B10001--
3	01010-80820	BOLT	4	SN:B10001--
4	01643-30823	WASHER	4	SN:B10001--
5	415-54-11980	CUSHION	1	SN:B10001--
6	419-54-31792	BRACKET	1	SN:B10001--
7	01010-80816	BOLT	6	SN:B10001--
8	01643-30823	WASHER	6	SN:B10001--
9	419-54-31830	FINISHER	1	SN:B10001--
10	419-54-31170	COVER	2	SN:B10001--
11	01010-81020	BOLT	4	SN:B10001--
12	01643-31032	WASHER	4	SN:B10001--
13	418-54-31832	PLATE	1	SN:B10001--
14	01643-30623	WASHER	2	SN:B10001--
15	04050-11612	PIN {COTTER}	2	SN:B10001--
16	421-09-12322	HOLDER	1	SN:B10001--
17	418-54-33130	SEAL	2	SN:B10001--
18	01023-10420	SCREW	2	SN:B10001--
19	01023-10414	SCREW	3	SN:B10001--
20	01580-60403	NUT	5	SN:B10001--

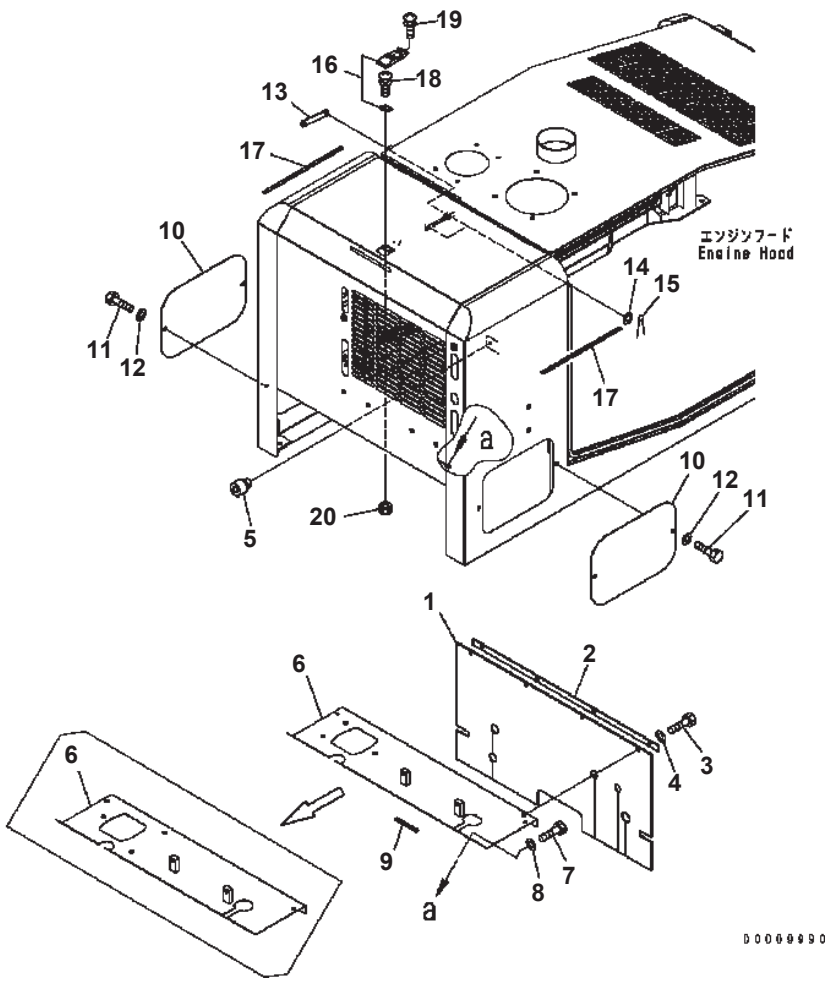

HOOD (BULK HEAD) (FOR SUGAR CANE) (#B10186-)

Item	Part No.	Description	Qty	Options
1	419-54-31186	SHEET	1	SN:B10186--
2	417-54-21431	PLATE	1	SN:B10186--
3	01010-80820	BOLT	4	SN:B10186--
4	01643-30823	WASHER	4	SN:B10186--
5	415-54-11980	CUSHION	1	SN:B10186--
6	419-54-B5520	BRACKET	1	SN:B10235--
	419-54-B4160	BRACKET	1	SN:B10186--B10234
7	01010-80816	BOLT	6	SN:B10186--
8	01643-30823	WASHER	6	SN:B10186--
9	419-54-31830	FINISHER	1	SN:B10186--
10	419-54-31170	COVER	2	SN:B10186--
11	01010-81020	BOLT	4	SN:B10186--
12	01643-31032	WASHER	4	SN:B10186--
13	418-54-31832	PLATE	1	SN:B10186--
14	01643-30623	WASHER	2	SN:B10186--
15	04050-11612	PIN {COTTER}	2	SN:B10186--
16	421-09-12322	HOLDER	1	SN:B10186--
17	418-54-33130	SEAL	2	SN:B10186--
18	01023-10420	SCREW	2	SN:B10186--
19	01023-10414	SCREW	3	SN:B10186--
20	01580-60403	NUT	5	SN:B10186--

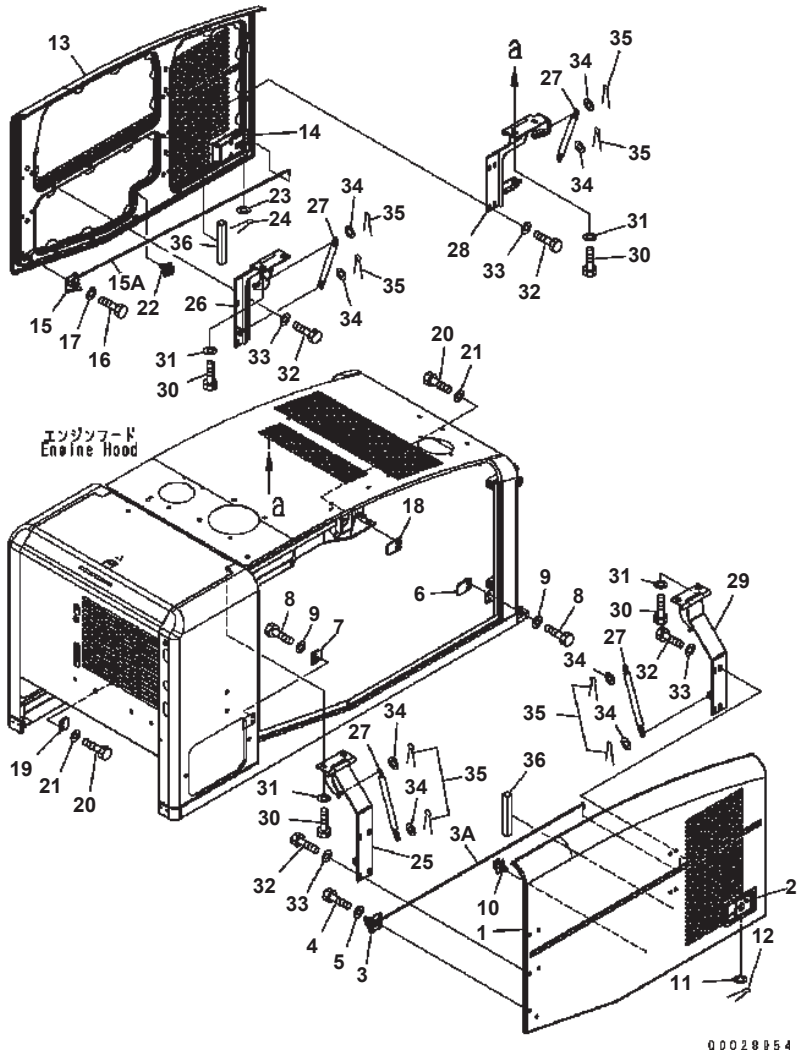

WA320-5 S/N B10001-UP

HOOD (DOOR)

Item	Part No.	Description	Qty	Options
1	419-54-B4131	DOOR {L.H.}	1	SN:B10096--
	419-54-B4130	DOOR {L.H.}	1	SN:B10007--B10095
	419-54-31120	DOOR {L.H.}	1	SN:B10001--B10006
2	421-54-31740	· LOCK ASS'Y (WELDED)	1	SN:B10001--
3	418-54-31493	LATCH ASS'Y	1	SN:B10001--
3A	418-54-B2520	ROD {R.H.}	1	SN:B10013--
4	01010-81020	BOLT	2	SN:B10001--
5	01643-31023	WASHER	2	SN:B10001--
6	418-54-31181	PLATE	1	SN:B10001--
7	418-54-31192	PLATE	1	SN:B10001--
8	01010-81025	BOLT	4	SN:B10001--
9	01643-31032	WASHER	4	SN:B10001--
10	418-54-34270	HOLDER	1	SN:B10001--
11	01640-20508	WASHER	1	SN:B10001--
12	04050-11610	PIN {COTTER}	1	SN:B10001--
13	419-54-B4141	DOOR {R.H.}	1	SN:B10096--
	419-54-B4140	DOOR {R.H.}	1	SN:B10007--B10095
	419-54-31130	DOOR {R.H.}	1	SN:B10001--B10006
14	421-54-31740	· LOCK ASS'Y (WELDED)	1	SN:B10001--
15	418-54-31353	LATCH ASS'Y	1	SN:B10001--
15A	418-54-B2510	ROD {L.H.}	1	SN:B10013--
16	01010-81020	BOLT	2	SN:B10001--
17	01643-31032	WASHER	2	SN:B10001--
18	418-54-31181	PLATE	1	SN:B10001--
19	418-54-31192	PLATE	1	SN:B10001--
20	01010-81025	BOLT	4	SN:B10001--
21	01643-31032	WASHER	4	SN:B10001--
22	418-54-34270	HOLDER	1	SN:B10001--
23	01640-20508	WASHER	1	SN:B10001--
24	04050-11610	PIN {COTTER}	1	SN:B10001--
25	418-54-34730	HINGE	1	SN:B10001--
26	418-54-34740	HINGE	1	SN:B10001--
27	418-54-31960	GAS SPRING	4	SN:B10001--
28	418-54-31671	HINGE	1	SN:B10001--
29	418-54-31681	HINGE	1	SN:B10001--
30	01010-81225	BOLT	8	SN:B10001--
31	01643-31232	WASHER	8	SN:B10001--
32	01010-81020	BOLT	16	SN:B10001--
33	01643-31032	WASHER	16	SN:B10001--
34	01640-20816	WASHER	8	SN:B10001--

Ref. M4100-03A0 Page 270050

WA320-5 S/N B10001-UP
HOOD (DOOR)

Item	Part No.	Description	Qty	Options
35	04050-12015	PIN {COTTER}	8	SN:B10001--
36	419-54-31810	SHEET	2	SN:B10001--

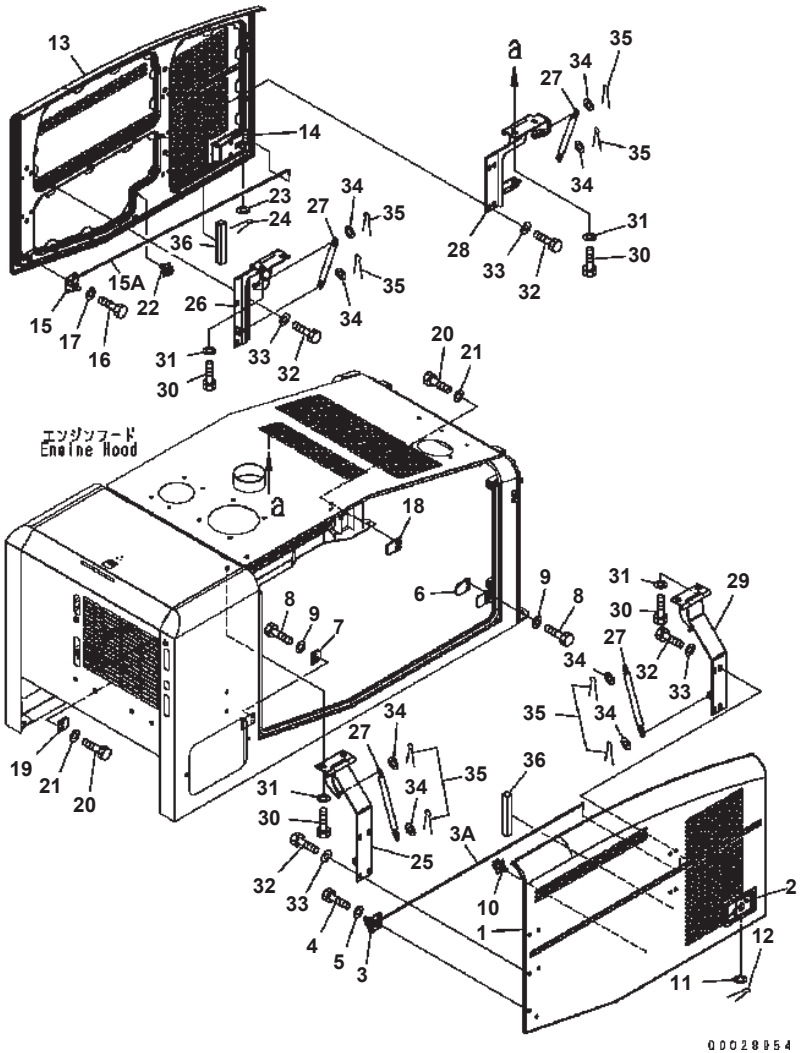

WA320-5 S/N B10001-UP

HOOD (DOOR) (FOR SUGAR CANE) (#B10186-)

Item	Part No.	Description	Qty	Options
1	419-54-B5440	DOOR {L.H.}	1	SN:B10235--
	419-54-B4131	DOOR {L.H.}	1	SN:B10186--B10234
	419-54-B4150	・ LOCK ASS'Y (WELDED)	1	SN:B10186--
2	421-54-11381	・・ LOCK	1	SN:B10186--
3	418-54-31493	LATCH ASS'Y	1	SN:B10186--
3A	418-54-B2520	ROD {R.H.}	1	SN:B10186--
4	01010-81020	BOLT	2	SN:B10186--
5	01643-31023	WASHER	2	SN:B10186--
6	418-54-31181	PLATE	1	SN:B10186--
7	418-54-31192	PLATE	1	SN:B10186--
8	01010-81025	BOLT	4	SN:B10186--
9	01643-31032	WASHER	4	SN:B10186--
10	418-54-34270	HOLDER	1	SN:B10186--
11	01640-20508	WASHER	1	SN:B10186--
12	04050-11610	PIN {COTTER}	1	SN:B10186--
13	419-54-B5430	DOOR {R.H.}	1	SN:B10235--
	419-54-B4141	DOOR {R.H.}	1	SN:B10186--B10234
	419-54-B4150	・ LOCK ASS'Y (WELDED)	1	SN:B10186--
14	421-54-11381	・・ LOCK	1	SN:B10186--
15	418-54-31353	LATCH ASS'Y	1	SN:B10186--
15A	418-54-B2510	ROD {L.H.}	1	SN:B10186--
16	01010-81020	BOLT	2	SN:B10186--
17	01643-31032	WASHER	2	SN:B10186--
18	418-54-31181	PLATE	1	SN:B10186--
19	418-54-31192	PLATE	1	SN:B10186--
20	01010-81025	BOLT	4	SN:B10186--
21	01643-31032	WASHER	4	SN:B10186--
22	418-54-34270	HOLDER	1	SN:B10186--
23	01640-20508	WASHER	1	SN:B10186--
24	04050-11610	PIN {COTTER}	1	SN:B10186--
25	418-54-34730	HINGE	1	SN:B10186--
26	418-54-34740	HINGE	1	SN:B10186--
27	418-54-31960	GAS SPRING	4	SN:B10186--
28	418-54-31671	HINGE	1	SN:B10186--
29	418-54-31681	HINGE	1	SN:B10186--
30	01010-81225	BOLT	8	SN:B10186--
31	01643-31232	WASHER	8	SN:B10186--
32	01010-81020	BOLT	16	SN:B10186--
33	01643-31032	WASHER	16	SN:B10186--
34	01640-20816	WASHER	8	SN:B10186--

Ref. M4100-03A1 Page 270060

WA320-5 S/N B10001-UP

HOOD (DOOR) (FOR SUGAR CANE) (#B10186-)

Item	Part No.	Description	Qty	Options
35	04050-12015	PIN {COTTER}	8	SN:B10186--
36	419-54-31810	SHEET	2	SN:B10186--

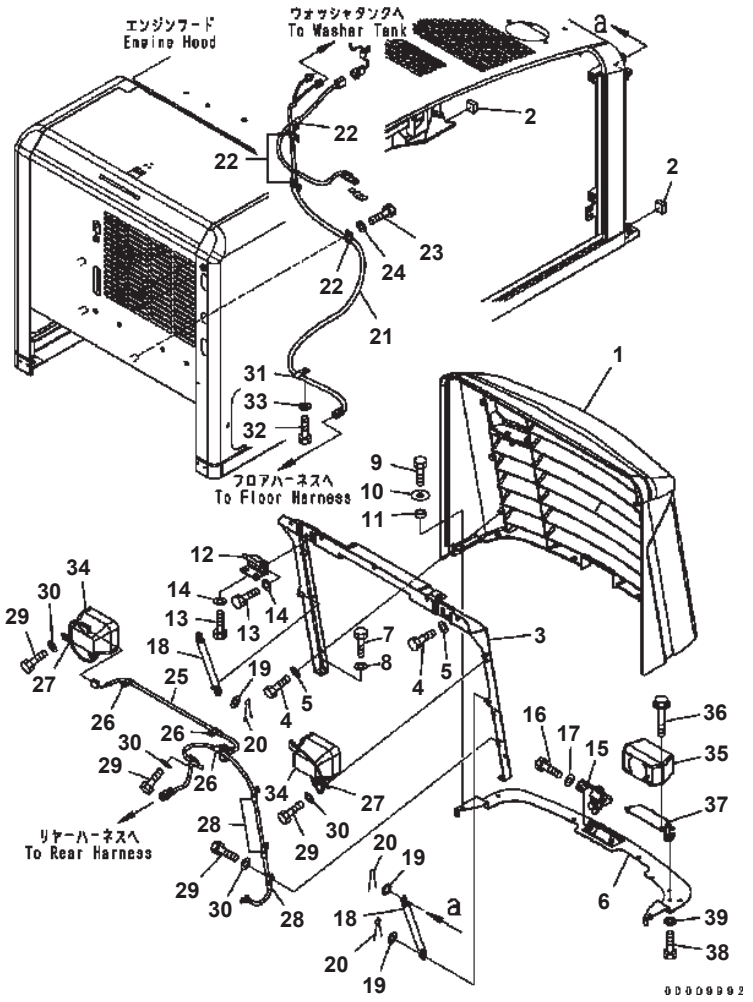

HOOD (RADIATOR GUARD)

Item	Part No.	Description	Qty	Options
1	418-54-31142	GRILLE	1	SN:B10001--
2	419-54-31780	CUSHION	2	SN:B10001--
3	418-54-31155	BRACKET	1	SN:B10001--
4	01010-80820	BOLT	13	SN:B10001--
5	01643-30823	WASHER	13	SN:B10001--
6	418-54-31164	BRACKET	1	SN:B10001--
7	01010-D0820	BOLT	2	SN:B10001--
8	01643-70823	WASHER	2	SN:B10001--
9	01010-D0820	BOLT	4	SN:B10001--
10	418-54-35450	WASHER	4	SN:B10001--
11	418-54-31970	SPACER	6	SN:B10001--
12	418-54-31172	HINGE	2	SN:B10001--
13	01010-81020	BOLT	8	SN:B10001--
14	01643-31032	WASHER	8	SN:B10001--
15	417-54-21562	LOCK ASS'Y	1	SN:B10001--
16	01010-80816	BOLT	2	SN:B10001--
17	01643-30823	WASHER	2	SN:B10001--
18	419-54-31140	GAS SPRING	2	SN:B10001--
19	01640-20816	WASHER	4	SN:B10001--
20	04050-12015	PIN {COTTER}	4	SN:B10001--
21	419-06-32121	WIRING HARNESS	1	SN:B10001--
22	04434-51012	CLIP	4	SN:B10001--
23	01010-81020	BOLT	4	SN:B10001--
24	01643-31032	WASHER	4	SN:B10001--
25	418-06-32312	WIRING HARNESS	1	SN:B10001--
26	04434-51010	CLIP	4	SN:B10001--
27	04434-50810	CLIP	2	SN:B10001--
28	417-06-32610	CLIP	3	SN:B10001--
29	01010-80816	BOLT	9	SN:B10001--
30	01643-30823	WASHER	9	SN:B10001--
31	04434-51412	CLIP	1	SN:B10001--
32	01010-81020	BOLT	1	SN:B10001--
33	01643-31032	WASHER	1	SN:B10001--
34	421-06-23350	LAMP ASS'Y	2	SN:B10001--
	421-06-23320	· LENS	1	SN:B10001--
	421-06-23330	· BULB¤ 70W	1	SN:B10001--
35	419-06-31510	BACK UP ALARM	1	SN:B10082--
	08164-B0000	BACK UP ALARM	1	SN:B10001--B10081
36	01435-00895	BOLT	2	SN:B10001--
37	418-54-31980	BRACKET	1	SN:B10001--

WA320-5 S/N B10001-UP

HOOD (RADIATOR GUARD)

Item	Part No.	Description	Qty	Options
38	01010-80816	BOLT	3	SN:B10001--
39	01643-30823	WASHER	3	SN:B10001--

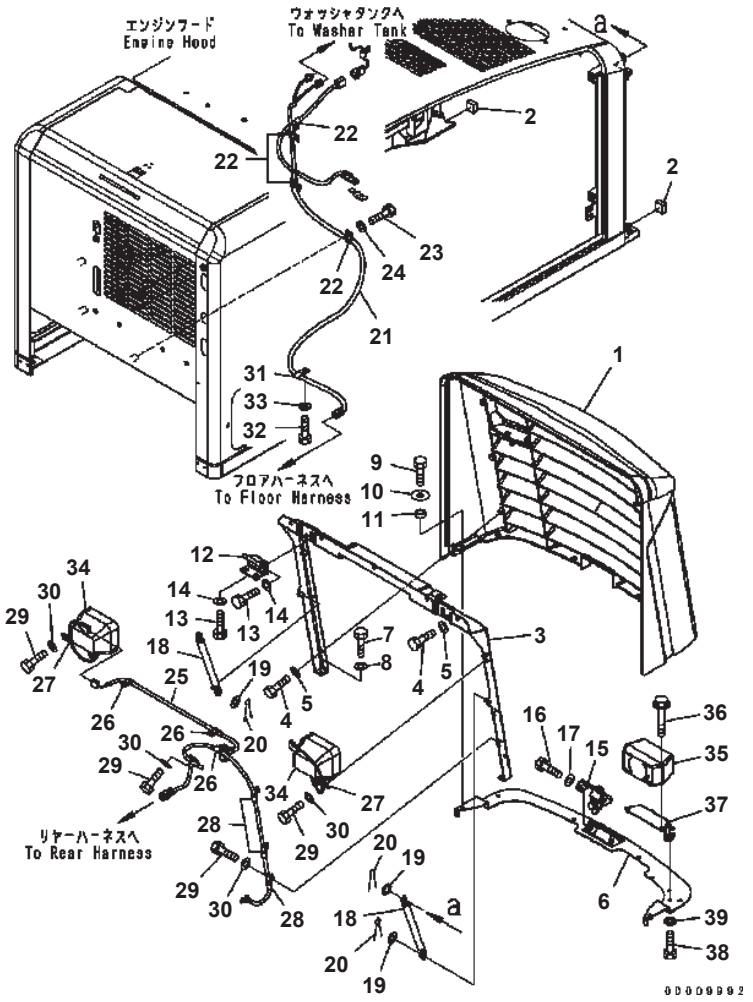

HOOD (RADIATOR GUARD) (FOR SUGAR CANE) (#B10186-B10234)

Item	Part No.	Description	Qty	Options
1	418-54-31142	GRILLE	1	SN:B10186--B10234
2	419-54-31780	CUSHION	2	SN:B10186--B10234
3	418-54-31155	BRACKET	1	SN:B10186--B10234
4	01010-80820	BOLT	13	SN:B10186--B10234
5	01643-30823	WASHER	13	SN:B10186--B10234
6	418-54-31164	BRACKET	1	SN:B10186--B10234
7	01010-D0820	BOLT	2	SN:B10186--B10234
8	01643-70823	WASHER	2	SN:B10186--B10234
9	01010-D0820	BOLT	4	SN:B10186--B10234
10	418-54-35450	WASHER	4	SN:B10186--B10234
11	418-54-31970	SPACER	6	SN:B10186--B10234
12	418-54-31172	HINGE	2	SN:B10186--@
13	01010-81020	BOLT	8	SN:B10186--@
14	01643-31032	WASHER	8	SN:B10186--@
15	417-54-21562	LOCK ASS'Y	1	SN:B10186--@
16	01010-80816	BOLT	2	SN:B10186--@
17	01643-30823	WASHER	2	SN:B10186--@
18	419-54-31140	GAS SPRING	2	SN:B10186--@
19	01640-20816	WASHER	4	SN:B10186--@
20	04050-12015	PIN {COTTER}	4	SN:B10186--@
21	419-06-32121	WIRING HARNESS	1	SN:B10186--@
22	04434-51012	CLIP	4	SN:B10186--@
23	01010-81020	BOLT	4	SN:B10186--@
24	01643-31032	WASHER	4	SN:B10186--@
25	418-06-32312	WIRING HARNESS	1	SN:B10186--@
26	04434-51010	CLIP	4	SN:B10186--@
27	04434-50810	CLIP	2	SN:B10186--@
28	417-06-32610	CLIP	3	SN:B10186--@
29	01010-80816	BOLT	9	SN:B10186--@
30	01643-30823	WASHER	9	SN:B10186--@
31	04434-51412	CLIP	1	SN:B10186--@
32	01010-81020	BOLT	1	SN:B10186--@
33	01643-31032	WASHER	1	SN:B10186--@
34	421-06-23350	LAMP ASS'Y	2	SN:B10186--@
	421-06-23320	· LENS	1	SN:B10186--@
	421-06-23330	· BULB¤ 70W	1	SN:B10186--@
35	419-06-31510	BACK UP ALARM	1	SN:B10186--@
36	01435-00895	BOLT	2	SN:B10186--@
37	418-54-31980	BRACKET	1	SN:B10186--@

WA320-5 S/N B10001-UP

HOOD (RADIATOR GUARD) (FOR SUGAR CANE) (#B10186-B10234)

Item	Part No.	Description	Qty	Options
38	01010-80816	BOLT	3	SN:B10186--@
39	01643-30823	WASHER	3	SN:B10186--@

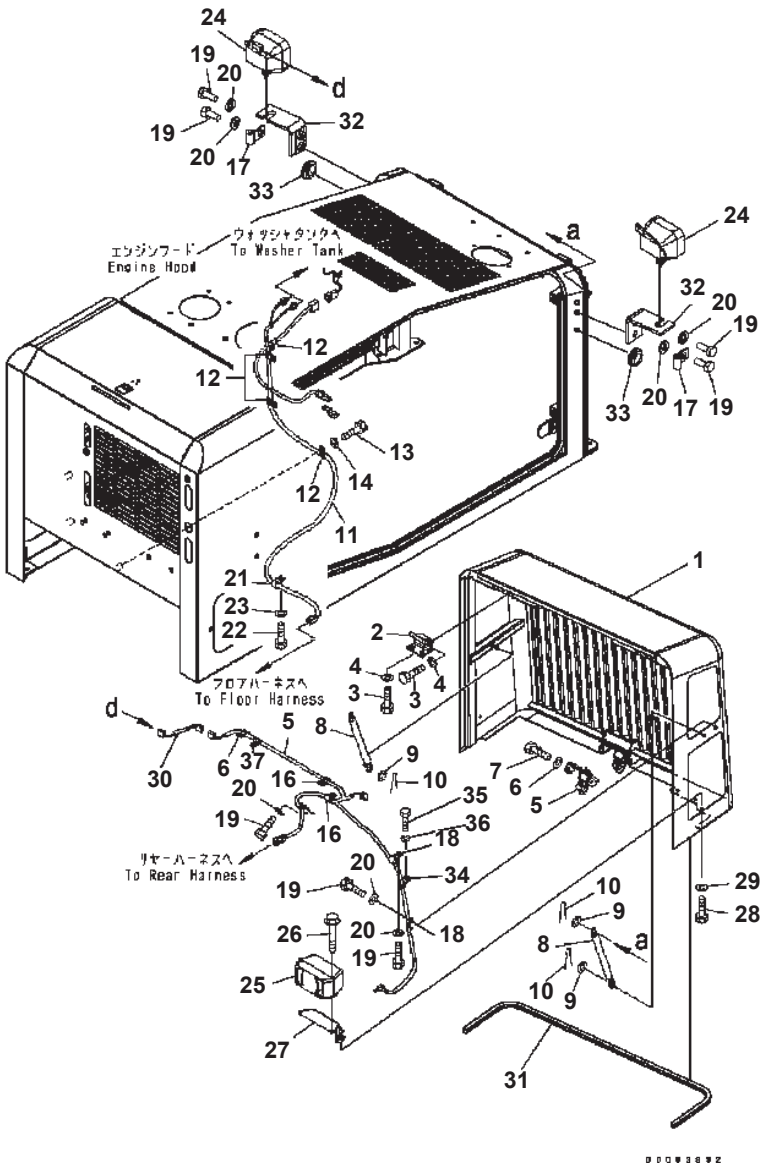

HOOD (RADIATOR GUARD) (FOR SUGAR CANE) (#B10235-)

Item	Part No.	Description	Qty	Options
1	419-54-B5510	GRILLE	1	SN:B10235--
2	418-54-31172	HINGE	2	SN:B10186--
3	01010-81020	BOLT	8	SN:B10186--
4	01643-31032	WASHER	8	SN:B10186--
5	417-54-21562	LOCK ASS'Y	1	SN:B10186--
6	01010-80816	BOLT	2	SN:B10186--
7	01643-30823	WASHER	2	SN:B10186--
8	419-54-31140	GAS SPRING	2	SN:B10186--
9	01640-20816	WASHER	4	SN:B10186--
10	04050-12015	PIN {COTTER}	4	SN:B10186--
11	419-06-32121	WIRING HARNESS	1	SN:B10186--
12	04434-51012	CLIP	4	SN:B10186--
13	01010-81020	BOLT	4	SN:B10186--
14	01643-31032	WASHER	4	SN:B10186--
15	418-06-32312	WIRING HARNESS	1	SN:B10186--
16	04434-51010	CLIP	4	SN:B10186--
17	04434-50810	CLIP	2	SN:B10186--
18	417-06-32610	CLIP	3	SN:B10186--
19	01010-80816	BOLT	9	SN:B10186--
20	01643-30823	WASHER	9	SN:B10186--
21	04434-51412	CLIP	1	SN:B10186--
22	01010-81020	BOLT	1	SN:B10186--
23	01643-31032	WASHER	1	SN:B10186--
24	421-06-23350	LAMP ASS'Y	2	SN:B10186--
	421-06-23320	· LENS	1	SN:B10186--
	421-06-23330	· BULB¤ 70W	1	SN:B10186--
25	419-06-31510	BACK UP ALARM	1	SN:B10186--
26	01435-00895	BOLT	2	SN:B10186--
27	418-54-31980	BRACKET	1	SN:B10186--
28	01010-80816	BOLT	3	SN:B10186--
29	01643-30823	WASHER	3	SN:B10186--
30	418-06-B1070	WIRING HARNESS	1	SN:B10275--
31	419-54-B5450	SEAL	1	SN:B10235--
32	419-54-B5470	BRACKET	2	SN:B10235--
33	08037-02512	GROMMET	2	SN:B10235--
34	08053-01510	CLIP	2	SN:B10288--
35	01010-81016	BOLT	2	SN:B10288--
36	01643-31032	WASHER	2	SN:B10288--
37	08051-00801	CLIP	2	SN:B10288--

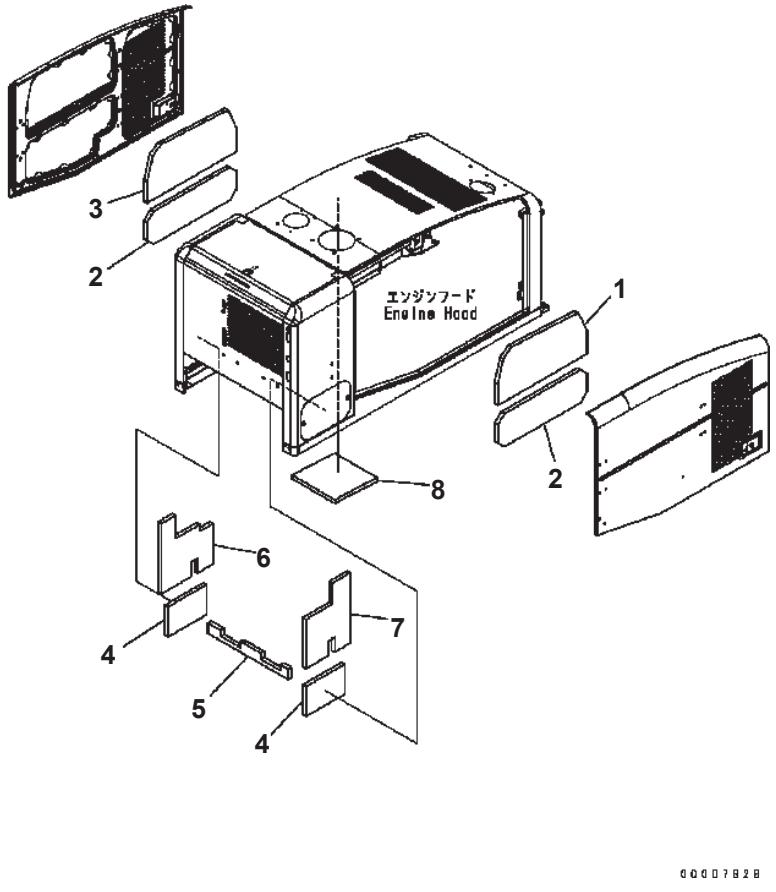

WA320-5 S/N B10001-UP

HOOD (SHEET) (#B10001-B10081)

Item	Part No.	Description	Qty	Options
1	418-54-31712	SHEET	1	SN:B10001--B10081
2	418-54-31732	SHEET	2	SN:B10001--B10081
3	418-54-31742	SHEET	1	SN:B10001--B10081
4	419-54-35210	SHEET	2	SN:B10001--B10081
5	419-54-35230	SHEET	1	SN:B10001--B10081
6	419-54-35260	SHEET	1	SN:B10001--B10081
7	419-54-35270	SHEET	1	SN:B10001--B10081
8	419-54-35280	SHEET	1	SN:B10001--B10081

Ref. M4100-05A0 Page 270100

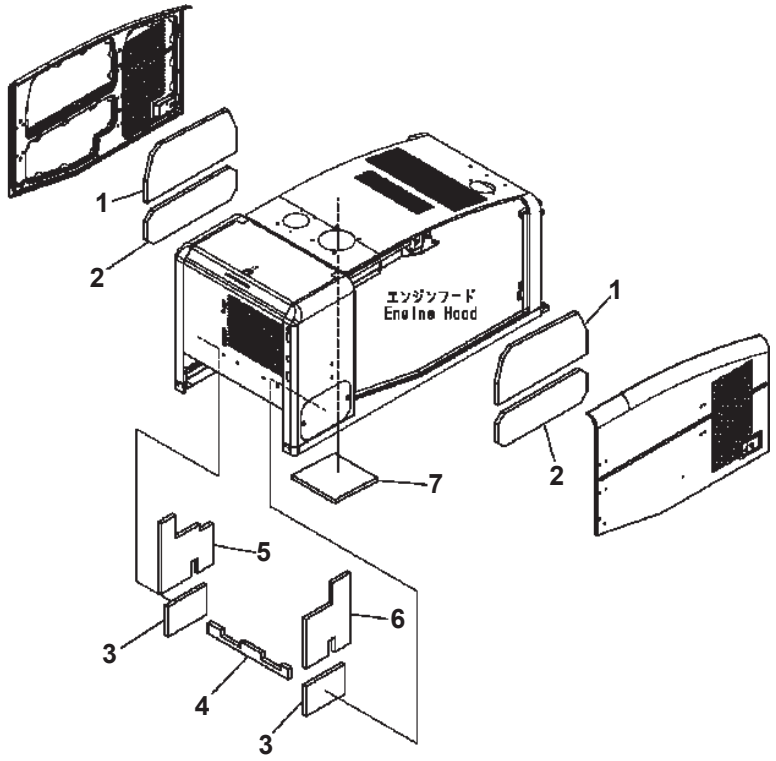

WA320-5 S/N B10001-UP

HOOD (SHEET) (#B10082-)

Item	Part No.	Description	Qty	Options
1	418-54-B1710	SHEET	2	SN:B10082--
2	418-54-B1730	SHEET	2	SN:B10082--
3	419-54-B5210	SHEET	2	SN:B10082--
4	419-54-B5230	SHEET	1	SN:B10082--
5	419-54-B5260	SHEET	1	SN:B10082--
6	419-54-B5270	SHEET	1	SN:B10082--
7	419-54-B5280	SHEET	1	SN:B10082--

Ref. M4100-05A0A Page 270110

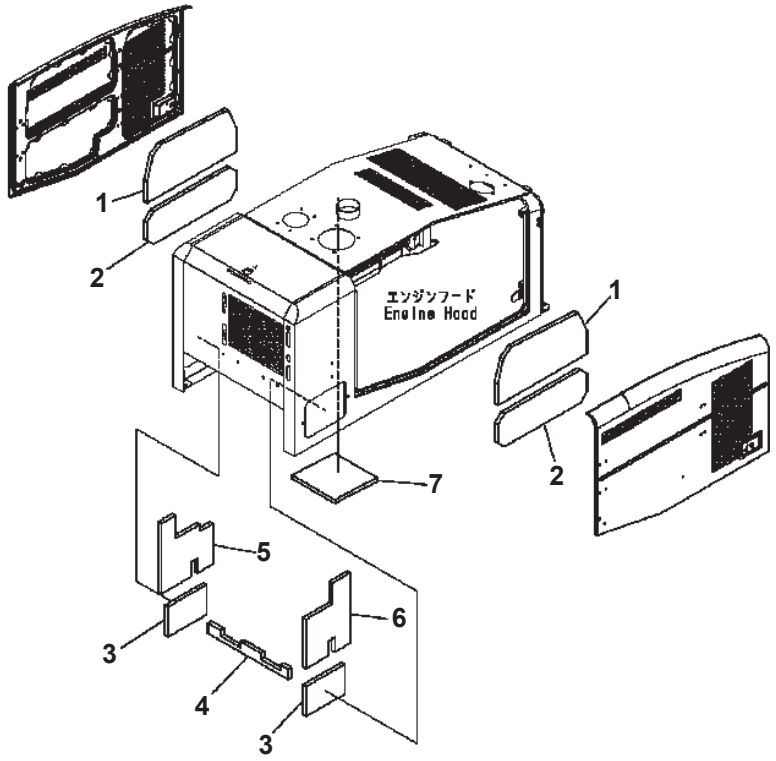

HOOD (SHEET) (FOR SUGAR CANE) (#B10186-)

Item	Part No.	Description	Qty	Options
1	418-54-B2540	SHEET	2	SN:B10296--
	418-54-B1710	SHEET	2	SN:B10186--B10295
2	418-54-B1730	SHEET	2	SN:B10186--
3	419-54-B5210	SHEET	2	SN:B10186--
4	419-54-B5230	SHEET	1	SN:B10186--
5	419-54-B5260	SHEET	1	SN:B10186--
6	419-54-B5270	SHEET	1	SN:B10186--
7	419-54-B5560	SHEET	1	SN:B10296--
	419-54-B5280	SHEET	1	SN:B10186--B10295

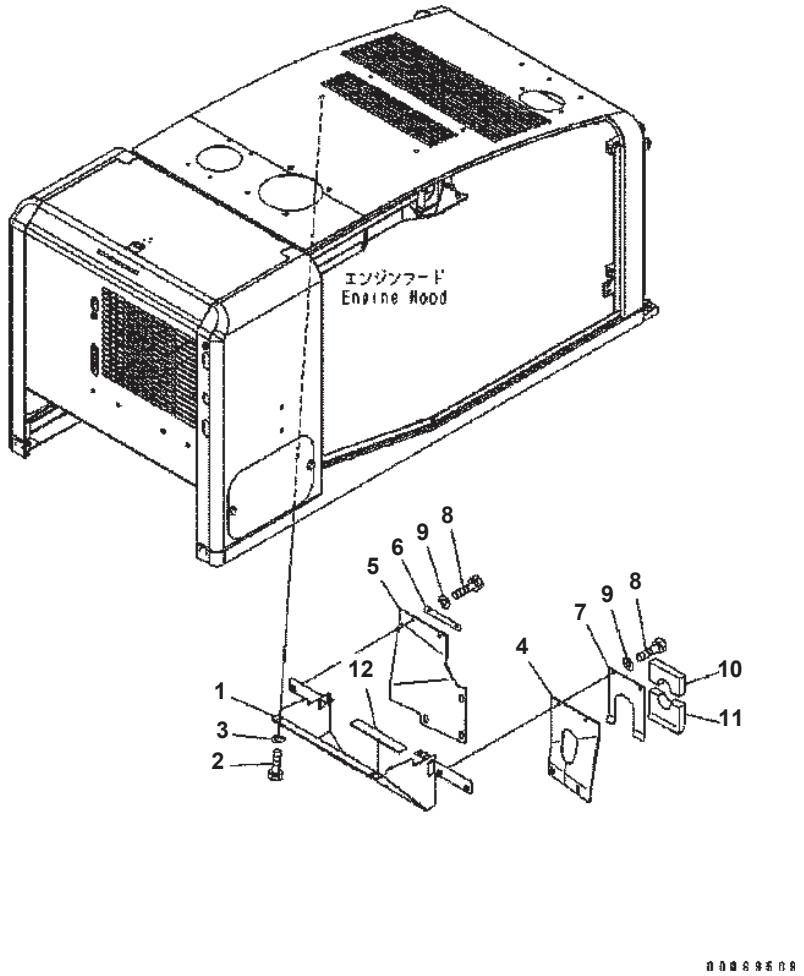

HOOD (DUCT COVER)

Item	Part No.	Description	Qty	Options
1	419-54-31441	COVER	1	SN:B10001--
2	01010-81016	BOLT	4	SN:B10001--
3	01643-31032	WASHER	4	SN:B10001--
4	419-54-31681	SHEET	1	SN:B10001--
5	419-54-31692	SHEET	1	SN:B10001--
6	418-54-31530	PLATE	1	SN:B10063--
	418-54-31530	PLATE	2	SN:B10001--B10062
7	419-54-31930	PLATE	1	SN:B10063--
8	01010-80820	BOLT	4	SN:B10001--
9	01643-30823	WASHER	4	SN:B10001--
10	419-54-31940	SHEET	1	SN:B10063--
11	419-54-31950	SHEET	1	SN:B10063--
12	419-54-31910	SHEET	1	SN:B10063--

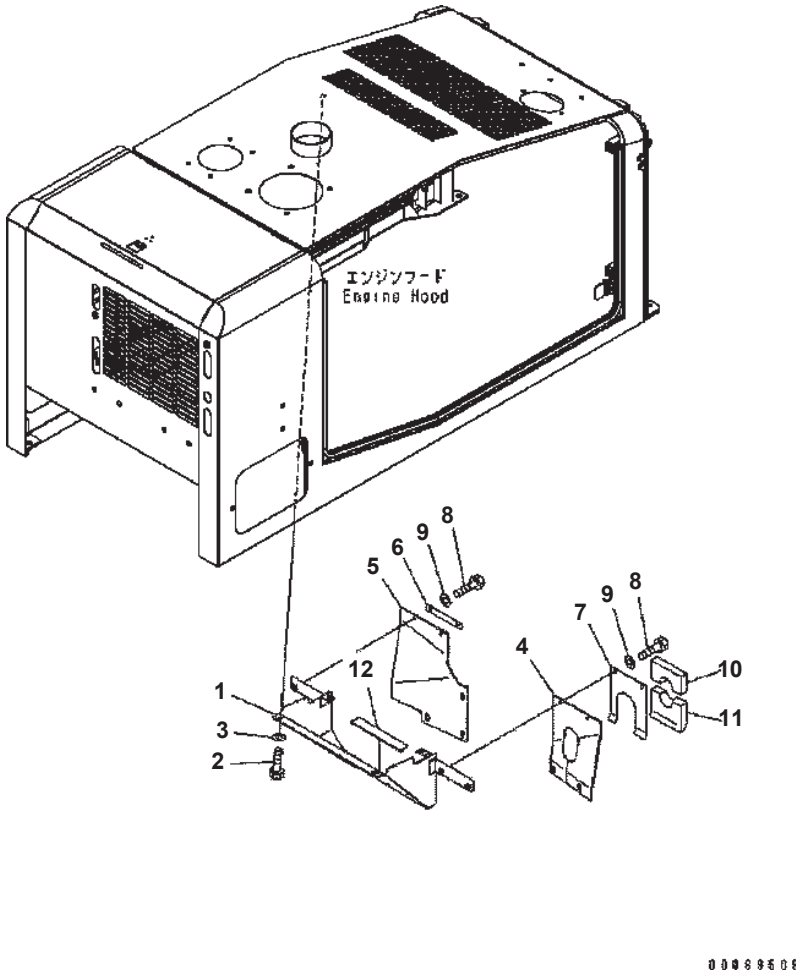

HOOD (DUCT COVER) (FOR SUGAR CANE) (#B10186-B10355)

Item	Part No.	Description	Qty	Options
1	419-54-B5370	COVER	1	SN:B10186--B10355
2	01010-81016	BOLT	4	SN:B10186--@
3	01643-31032	WASHER	4	SN:B10186--@
4	419-54-31681	SHEET	1	SN:B10186--B10287
5	419-54-31692	SHEET	1	SN:B10186--B10287
6	418-54-31530	PLATE	2	SN:B10186--B10287
7	419-54-31930	PLATE	1	SN:B10186--B10287
8	01010-80820	BOLT	4	SN:B10186--B10287
9	01643-30823	WASHER	4	SN:B10186--B10287
10	419-54-31940	SHEET	1	SN:B10186--B10287
11	419-54-31950	SHEET	1	SN:B10186--B10287
12	419-54-31910	SHEET	1	SN:B10186--@

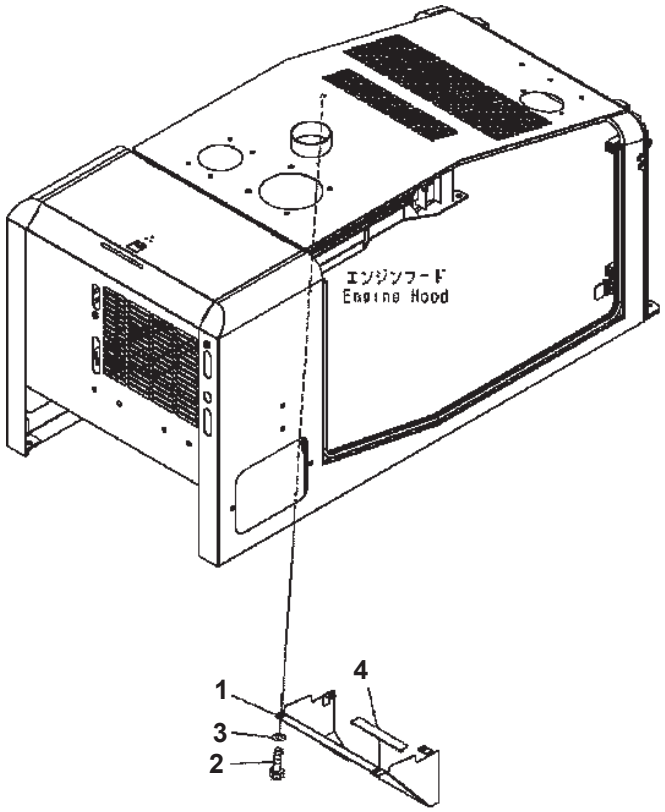

HOOD (DUCT COVER) (FOR SUGAR CANE) (#B10356-)

Item	Part No.	Description	Qty	Options
1	419-54-B5371	COVER	1	SN:B10356--
2	01010-81016	BOLT	4	SN:B10186--
3	01643-31032	WASHER	4	SN:B10186--
4	419-54-31910	SHEET	1	SN:B10186--

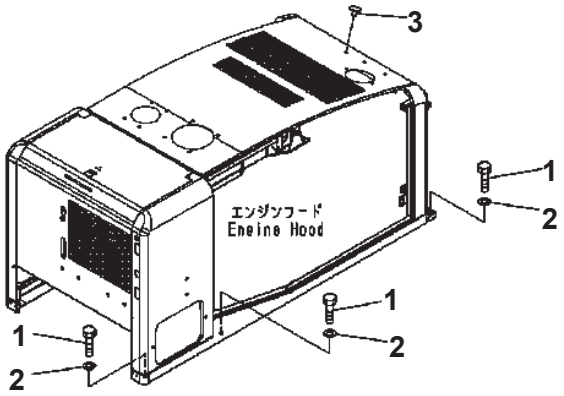

00007830

HOOD MOUNTING

Item	Part No.	Description	Qty	Options
1	01010-81230	BOLT	6	SN:B10001--
2	01643-31232	WASHER	6	SN:B10001--
3	416-54-21710	PLUG	1	SN:B10001--

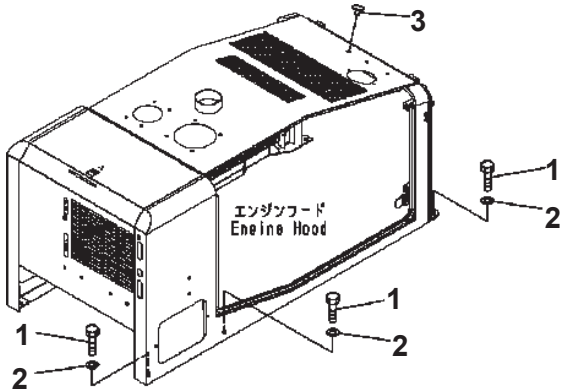

00007830

HOOD MOUNTING (FOR SUGAR CANE) (#B10186-)

Item	Part No.	Description	Qty	Options
1	01010-81230	BOLT	6	SN:B10186--
2	01643-31232	WASHER	6	SN:B10186--
3	416-54-21710	PLUG	1	SN:B10186--

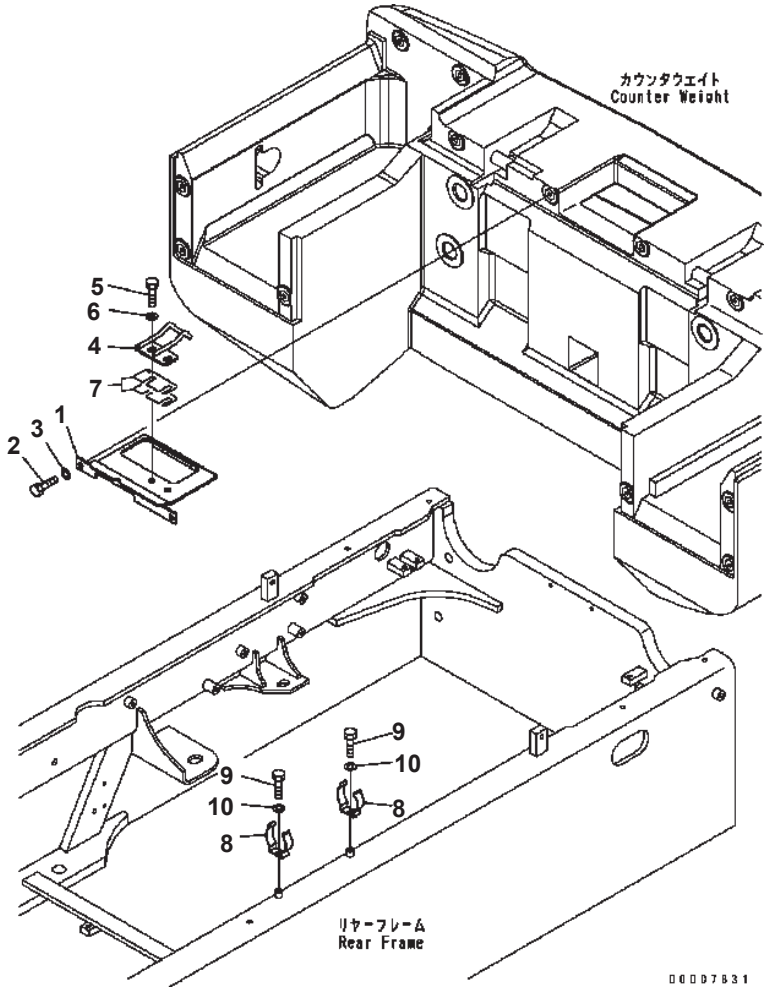

HOOD (COVER AND STRINKER)

Item	Part No.	Description	Qty	Options
1	419-54-31252	BRACKET	1	SN:B10001--
2	01010-81025	BOLT	2	SN:B10001--
3	01643-31032	WASHER	2	SN:B10001--
4	419-54-31261	STRIKER	1	SN:B10001--
5	01010-81025	BOLT	2	SN:B10001--
6	01643-31032	WASHER	2	SN:B10001--
7	418-54-34151	SHIM	3	SN:B10001--
8	417-54-21460	SPRING	2	SN:B10001--
9	01010-80816	BOLT	2	SN:B10001--
10	01643-30823	WASHER	2	SN:B10001--

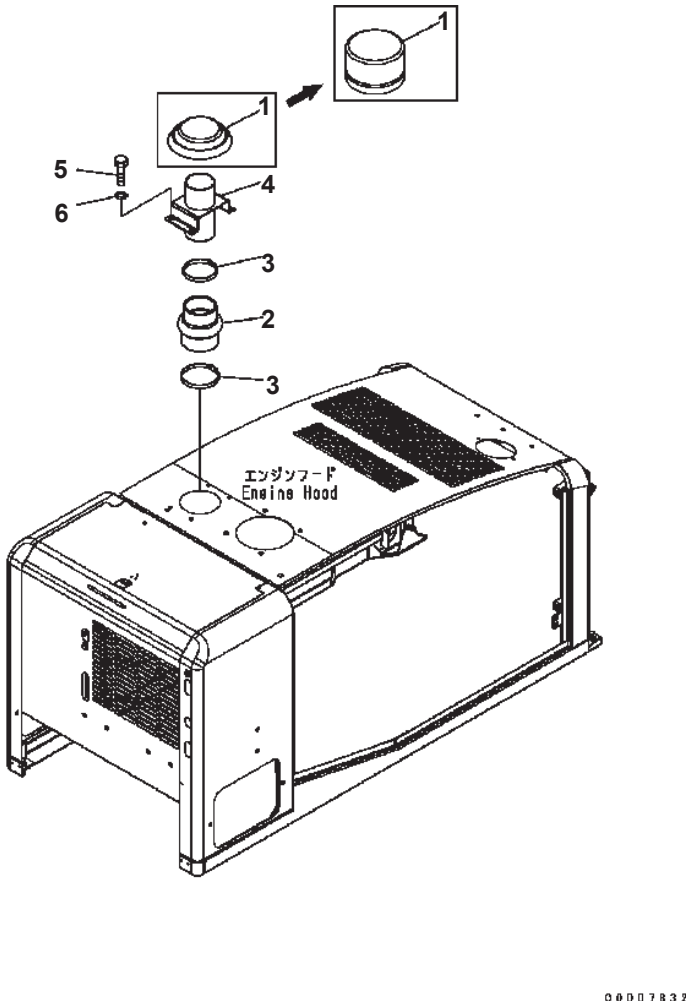

HOOD (CAP)

Item	Part No.	Description	Qty	Options
1	12Y-02-11293	PRE CLEANER	1	SN:B10327--
	600-181-3850	CAP	1	SN:B10001--B10326
2	418-54-31330	HOSE	1	SN:B10001--
3	07289-00120	CLAMP	2	SN:B10001--
4	419-54-B5570	BRACKET	1	SN:B10327--
	419-54-31341	BRACKET	1	SN:B10001--B10326
5	01010-81020	BOLT	4	SN:B10001--
6	01643-31032	WASHER	4	SN:B10001--

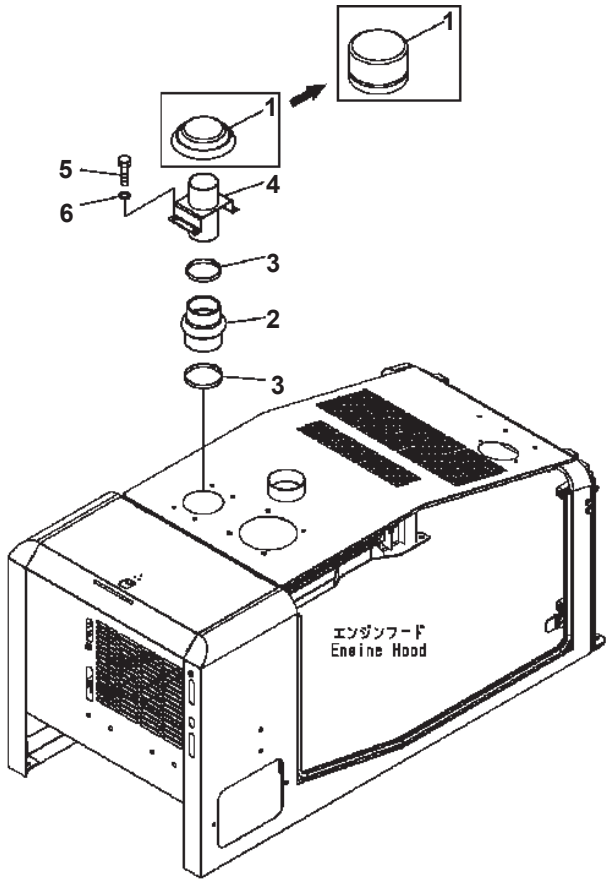

HOOD (CAP) (FOR SUGAR CANE) (#B10186-)

Item	Part No.	Description	Qty	Options
1	12Y-02-11293	PRE CLEANER	1	SN:B10327--
	600-181-3850	CAP	1	SN:B10186--B10326
2	418-54-31330	HOSE	1	SN:B10186--
3	07289-00120	CLAMP	2	SN:B10186--
4	419-54-B5570	BRACKET	1	SN:B10327--
	419-54-31341	BRACKET	1	SN:B10186--B10326
5	01010-81020	BOLT	4	SN:B10186--
6	01643-31032	WASHER	4	SN:B10186--

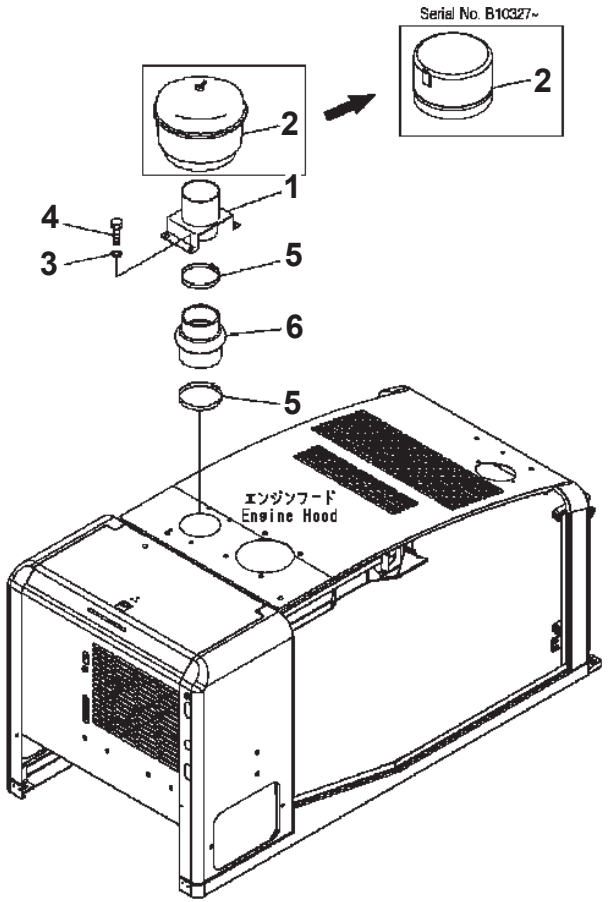

00074800

HOOD (PRE-CLEANER)

Item	Part No.	Description	Qty	Options
1	419-54-B5570	BRACKET	1	SN:B10327--
	□419-54-31860	BRACKET	1	SN:B10001--B10326
2	12Y-02-11293	PRE-CLEANER ASS'Y	1	SN:B10327--
	□600-181-2630	PRE-CLEANER ASS'Y	1	SN:B10001--B10326
3	01643-31032	WASHER	4	SN:B10001--
4	01010-81025	BOLT	4	SN:B10001--
5	07289-00120	CLAMP	2	SN:B10001--
6	418-54-31330	HOSE	1	SN:B10001--

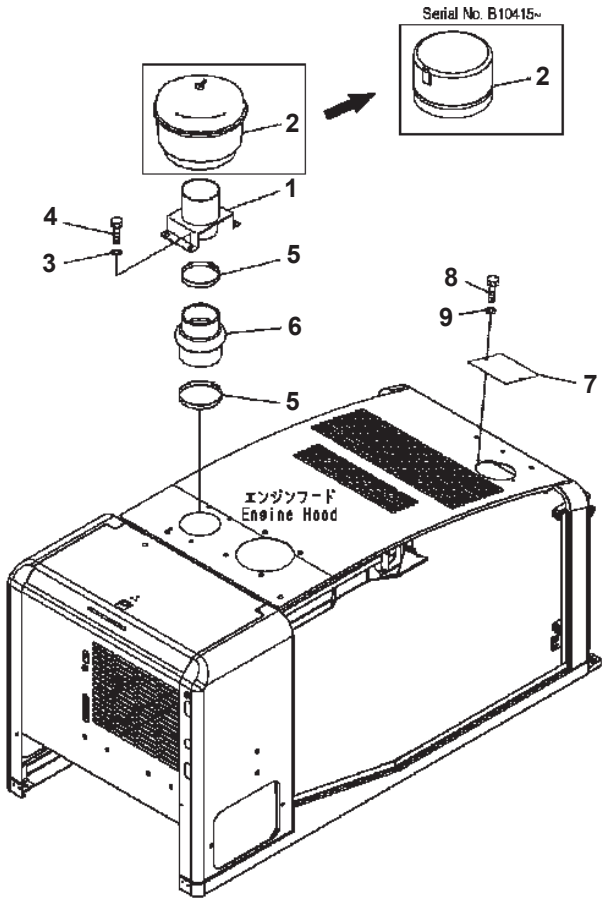

00074800

HOOD (PRE-CLEANER) (SUGAR CANE)

Item	Part No.	Description	Qty	Options
1	419-54-B5570	BRACKET	1	SN:B10415--
	□419-54-31860	BRACKET	1	SN:B10001--B10414
2	12Y-02-11293	PRE-CLEANER ASS'Y	1	SN:B10415--
	□600-181-2630	PRE-CLEANER ASS'Y	1	SN:B10001--B10414
3	01643-31032	WASHER	4	SN:B10001--
4	01010-81025	BOLT	4	SN:B10001--
5	07289-00120	CLAMP	2	SN:B10001--
6	418-54-31330	TUBE	1	SN:B10001--
7	416-Z91-2110	COVER	1	SN:B10317--
8	01010-80816	BOLT	2	SN:B10317--
9	01643-30823	WASHER	2	SN:B10317--

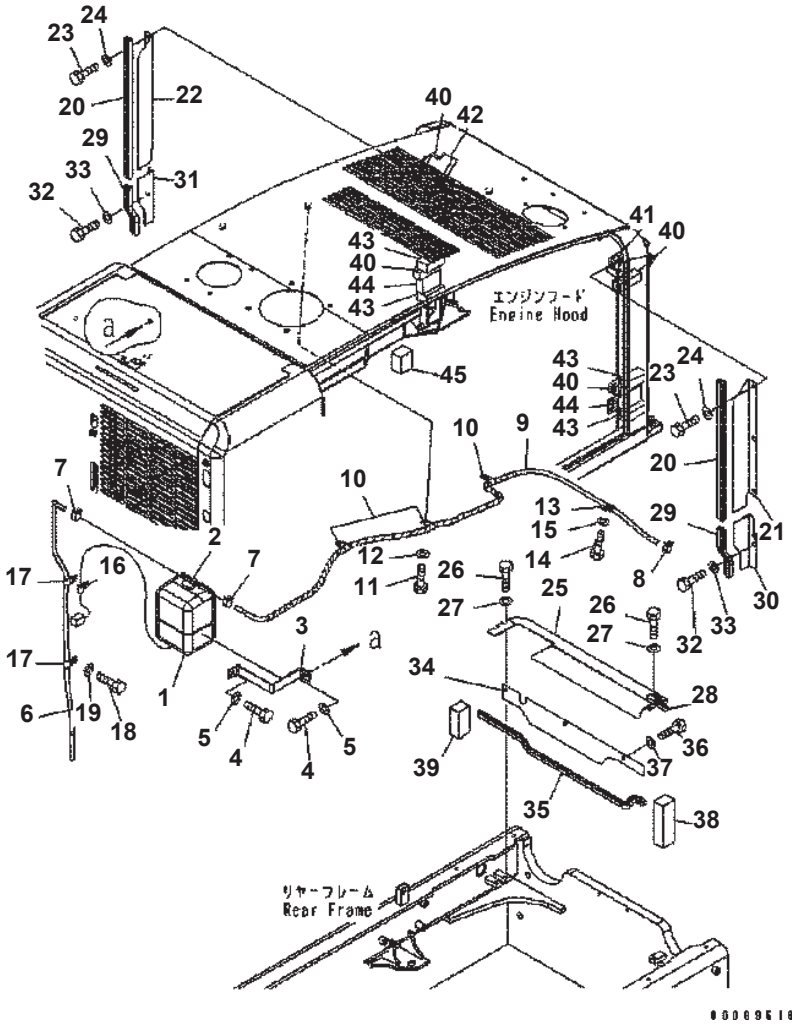

HOOD (RADIATOR PIPING AND BUFFLE PLACE)

Item	Part No.	Description	Qty	Options
1	20Y-06-15240	TANK ASS'Y	1	SN:B10001--
2	205-03-71532	・ CAP	1	SN:B10001--
	205-03-71540	・・ PACKING	1	SN:B10001--
3	418-03-31360	PLATE	1	SN:B10001--
4	01010-81020	BOLT	2	SN:B10001--
5	01643-31032	WASHER	2	SN:B10001--
6	07287-00812	HOSE	1	SN:B10001--
7	07285-00125	CLIP	2	SN:B10001--
8	07285-00115	CLIP	1	SN:B10001--
9	419-03-31390	HOSE	1	SN:B10001--
10	04434-51710	CLIP	2	SN:B10001--
11	01010-80816	BOLT	2	SN:B10001--
12	01643-30823	WASHER	2	SN:B10001--
13	04434-51210	CLIP	1	SN:B10001--
14	01010-80816	BOLT	1	SN:B10001--
15	01643-30823	WASHER	1	SN:B10001--
16	04434-50812	CLIP	1	SN:B10001--
17	04434-51210	CLIP	2	SN:B10001--
18	01010-81020	BOLT	2	SN:B10001--
19	01643-31032	WASHER	2	SN:B10001--
20	419-54-32230	SEAL	2	SN:B10063--
	419-54-31740	SEAL	2	SN:B10001--B10062
21	419-54-32110	PLATE	1	SN:B10063--
	419-54-31281	PLATE	2	SN:B10001--B10062
22	419-54-32120	PLATE	1	SN:B10063--
23	01010-80816	BOLT	6	SN:B10001--
24	01643-30823	WASHER	6	SN:B10001--
25	419-54-31393	PLATE	1	SN:B10063--
	419-54-31392	PLATE	1	SN:B10001--B10062
26	01010-81020	BOLT	3	SN:B10001--
27	01643-31032	WASHER	3	SN:B10001--
28	419-54-31840	FINISHER	1	SN:B10001--
29	419-54-31750	SEAL	2	SN:B10001--
30	419-54-31721	PLATE	1	SN:B10001--
31	419-54-31731	PLATE	1	SN:B10001--
32	01010-80816	BOLT	4	SN:B10001--
33	01643-30823	WASHER	4	SN:B10001--
34	419-54-31353	PLATE	1	SN:B10063--
	419-54-31351	PLATE	1	SN:B10001--B10062
35	23S-61-51730	SEAL	1	SN:B10063--

WA320-5 S/N B10001-UP

HOOD (RADIATOR PIPING AND BUFFLE PLACE)

Item	Part No.	Description	Qty	Options
	419-54-31490	SEAL	1	SN:B10001--B10062
36	01010-81020	BOLT	3	SN:B10001--
37	01643-31032	WASHER	3	SN:B10001--
38	419-54-31760	SHEET	1	SN:B10001--
39	418-54-35180	SHEET	1	SN:B10001--
40	419-54-32140	SHEET	4	SN:B10063--
41	419-54-32130	SHEET	1	SN:B10063--
42	419-54-32190	SHEET	1	SN:B10063--
43	419-54-32170	SHEET	4	SN:B10063--
44	419-54-32180	SHEET	2	SN:B10063--
45	419-54-32240	SHEET	1	SN:B10063--

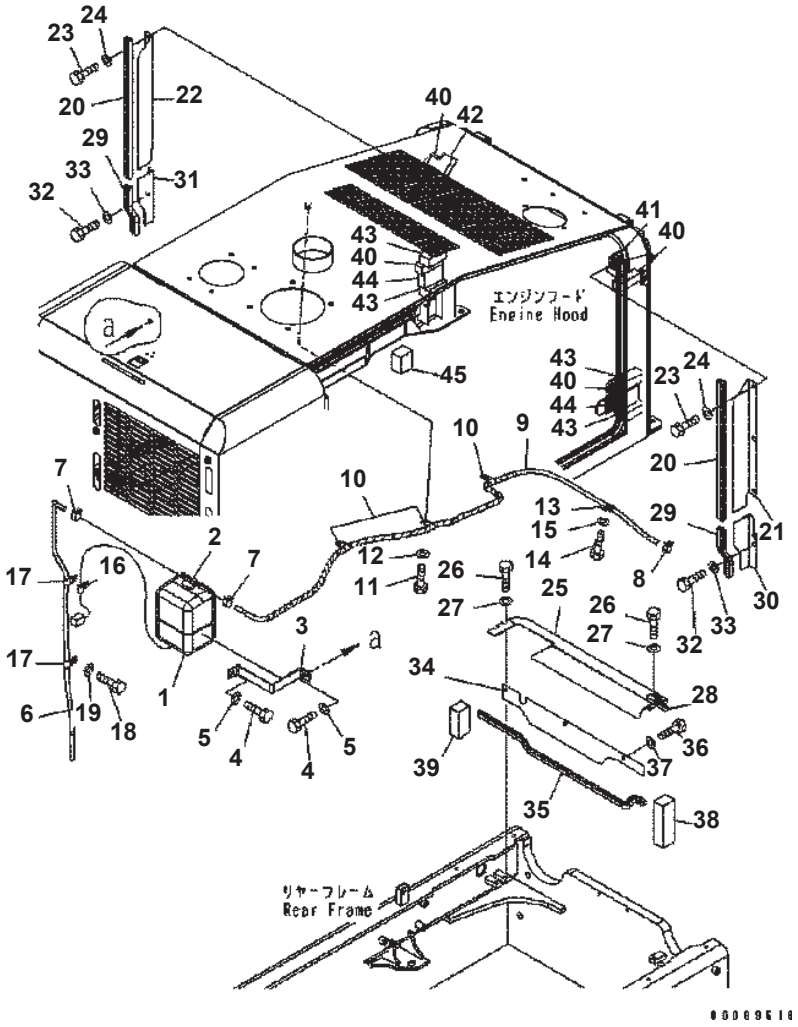

WA320-5 S/N B10001-UP

HOOD (RADIATOR PIPING AND BUFFLE PLACE) (FOR SUGAR CANE) (#B10186-)

Item	Part No.	Description	Qty	Options
1	20Y-06-15240	TANK ASS'Y	1	SN:B10186--
2	205-03-71532	・ CAP	1	SN:B10186--
	205-03-71540	・・ PACKING	1	SN:B10186--
3	418-03-31360	PLATE	1	SN:B10186--
4	01010-81020	BOLT	2	SN:B10186--
5	01643-31032	WASHER	2	SN:B10186--
6	07287-00812	HOSE	1	SN:B10186--
7	07285-00125	CLIP	2	SN:B10186--
8	07285-00115	CLIP	1	SN:B10186--
9	419-03-31390	HOSE	1	SN:B10186--
10	04434-51710	CLIP	2	SN:B10186--
11	01010-80816	BOLT	2	SN:B10186--
12	01643-30823	WASHER	2	SN:B10186--
13	04434-51210	CLIP	1	SN:B10186--
14	01010-80816	BOLT	1	SN:B10186--
15	01643-30823	WASHER	1	SN:B10186--
16	04434-50812	CLIP	1	SN:B10186--
17	04434-51210	CLIP	2	SN:B10186--
18	01010-81020	BOLT	2	SN:B10186--
19	01643-31032	WASHER	2	SN:B10186--
20	419-54-B5330	SEAL	2	SN:B10186--
21	419-54-32110	PLATE	1	SN:B10186--
22	419-54-32120	PLATE	1	SN:B10186--
23	01010-80816	BOLT	6	SN:B10186--
24	01643-30823	WASHER	6	SN:B10186--
25	419-54-31393	PLATE	1	SN:B10186--
	419-54-31392	PLATE	1	SN:B10186--
26	01010-81020	BOLT	3	SN:B10186--
27	01643-31032	WASHER	3	SN:B10186--
28	419-54-31840	FINISHER	1	SN:B10186--
29	419-54-B5340	SEAL	2	SN:B10186--
30	419-54-31721	PLATE	1	SN:B10186--
31	419-54-31731	PLATE	1	SN:B10186--
32	01010-80816	BOLT	4	SN:B10186--
33	01643-30823	WASHER	4	SN:B10186--
34	419-54-31353	PLATE	1	SN:B10186--
35	23S-61-51730	SEAL	1	SN:B10186--
36	01010-81020	BOLT	3	SN:B10186--
37	01643-31032	WASHER	3	SN:B10186--

Ref. M4100-10A1 Page 270240

WA320-5 S/N B10001-UP

HOOD (RADIATOR PIPING AND BUFFLE PLACE) (FOR SUGAR CANE) (#B10186-)

Item	Part No.	Description	Qty	Options
38	419-54-31760	SHEET	1	SN:B10186--
39	418-54-35180	SHEET	1	SN:B10186--
40	419-54-32140	SHEET	4	SN:B10186--
41	419-54-32130	SHEET	1	SN:B10186--
42	419-54-32190	SHEET	1	SN:B10186--
43	419-54-32170	SHEET	4	SN:B10186--
44	419-54-32180	SHEET	2	SN:B10186--
45	419-54-32240	SHEET	1	SN:B10186--

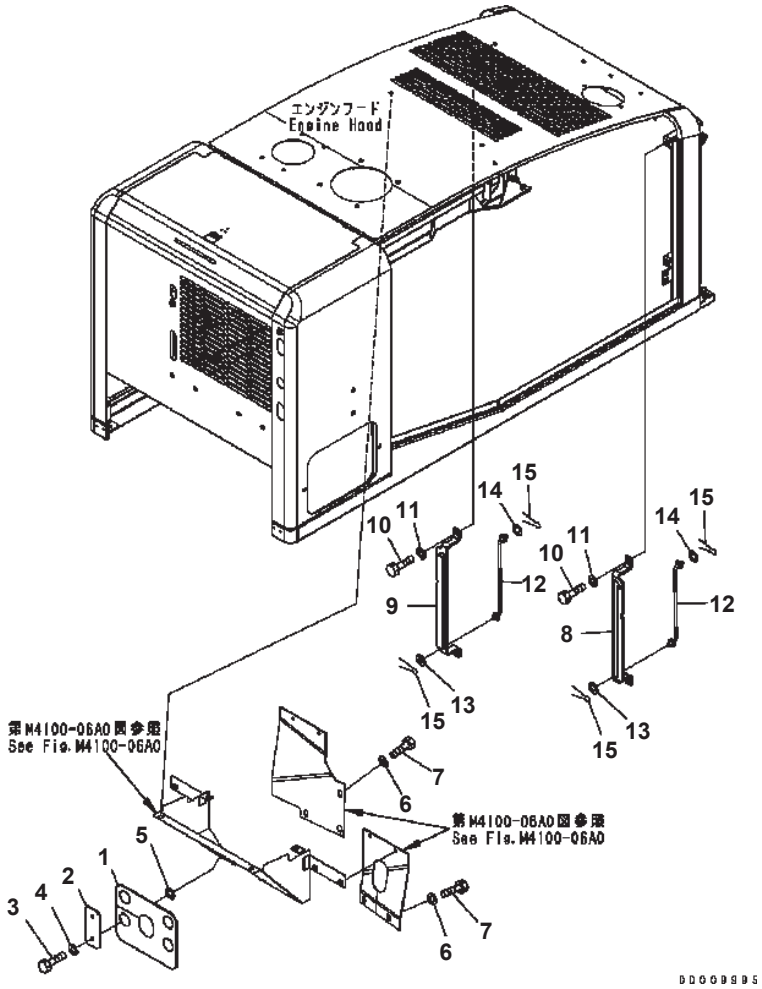

HOOD (DUCT SHEET)

Item	Part No.	Description	Qty	Options
1	419-54-31771	SHEET	1	SN:B10001--
2	419-54-31890	PLATE	2	SN:B10001--
3	01010-80820	BOLT	4	SN:B10001--
4	01643-30823	WASHER	4	SN:B10001--
5	01643-30823	WASHER	4	SN:B10001--
6	203-54-56970	WASHER	5	SN:B10001--
7	01010-81020	BOLT	5	SN:B10001--
8	419-54-31580	BRACKET {L.H.}	1	SN:B10001--
9	419-54-31590	BRACKET {R.H.}	1	SN:B10001--
10	01010-81025	BOLT	4	SN:B10001--
11	01643-31032	WASHER	4	SN:B10001--
12	419-54-31481	ROD	2	SN:B10001--
13	417-43-16210	WASHER	2	SN:B10001--
14	01643-31032	WASHER	2	SN:B10001--
15	04050-12015	PIN	4	SN:B10001--

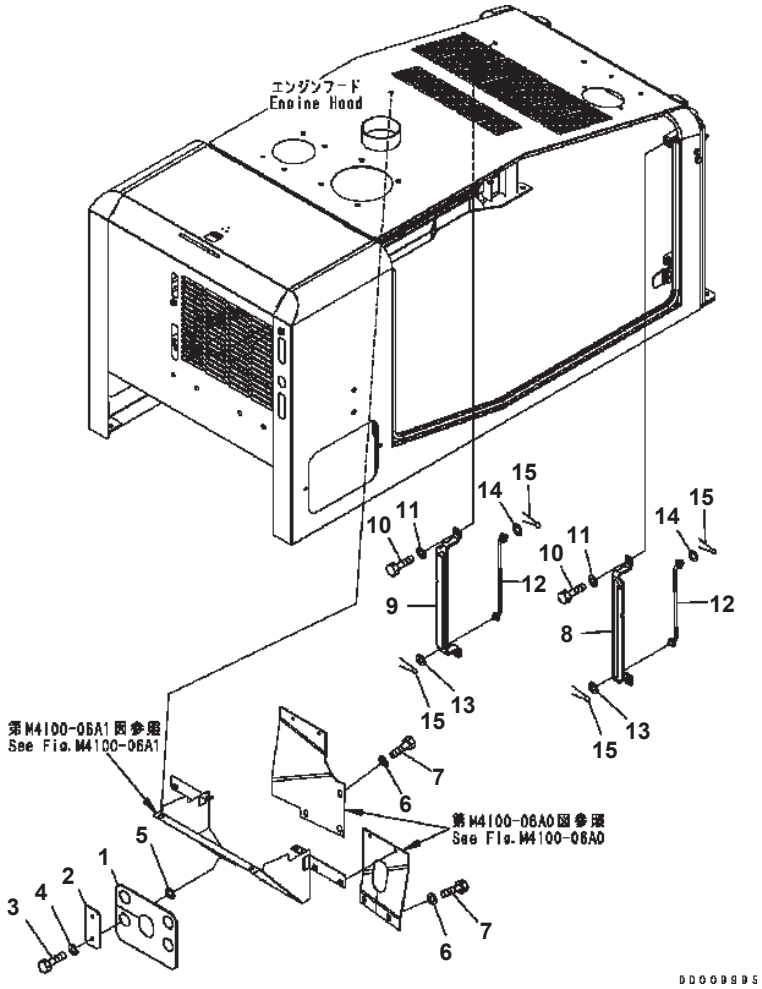

HOOD (DUCT SHEET) (FOR SUGAR CANE) (#B10186-)

Item	Part No.	Description	Qty	Options
1	419-54-31771	SHEET	1	SN:B10186--
2	419-54-31890	PLATE	2	SN:B10186--
3	01010-80820	BOLT	4	SN:B10186--
4	01643-30823	WASHER	4	SN:B10186--
5	01643-30823	WASHER	4	SN:B10186--
6	203-54-56970	WASHER	5	SN:B10186--
7	01010-81020	BOLT	5	SN:B10186--
8	419-54-31580	BRACKET {L.H.}	1	SN:B10186--
9	419-54-31590	BRACKET {R.H.}	1	SN:B10186--
10	01010-81025	BOLT	4	SN:B10186--
11	01643-31032	WASHER	4	SN:B10186--
12	419-54-31481	ROD	2	SN:B10186--
13	417-43-16210	WASHER	2	SN:B10186--
14	01643-31032	WASHER	2	SN:B10186--
15	04050-12015	PIN	4	SN:B10186--

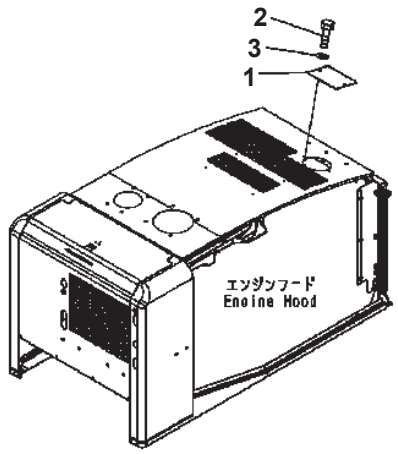

00002647

WA320-5 S/N B10001-UP

HOOD (COVER)

Item	Part No.	Description	Qty	Options
1	416-Z91-2110	PLATE	1	SN:B10001--
2	01010-80816	BOLT	2	SN:B10001--
3	01643-30823	WASHER	2	SN:B10001--

Ref. M4100-13A2 Page 270270

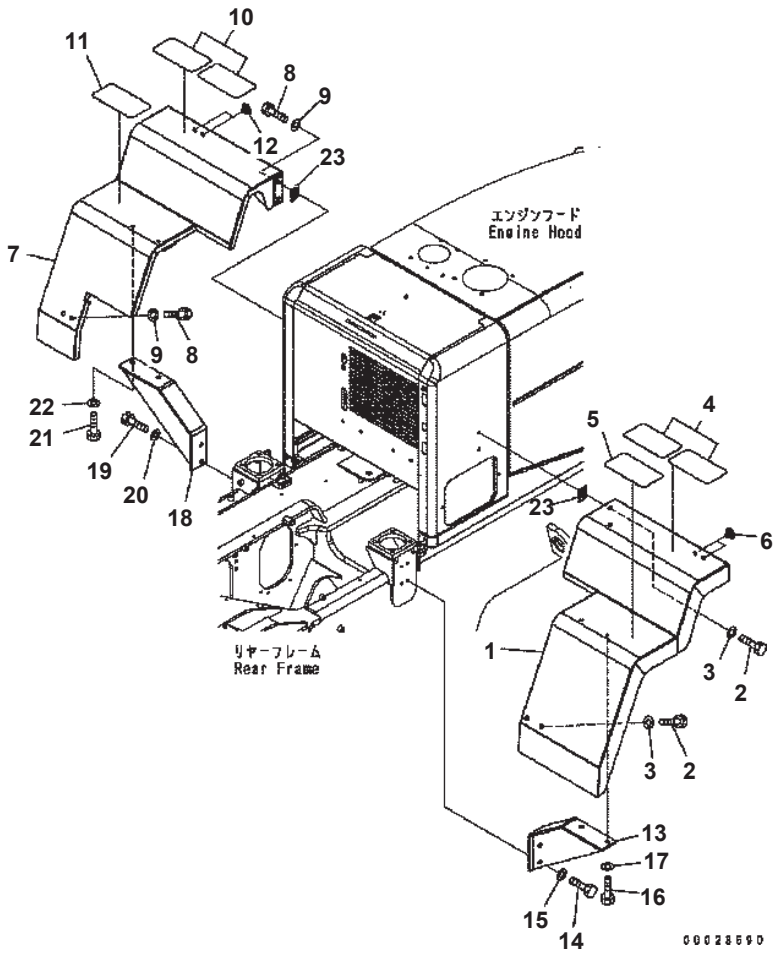

REAR FENDER

Item	Part No.	Description	Qty	Options
1	419-54-31212	FENDER {L.H.}	1	SN:B10001--
2	01010-81230	BOLT	4	SN:B10013--
3	01643-31232	WASHER	4	SN:B10013--
	01010-81225	BOLT	4	SN:B10001--B10012
	01643-31232	WASHER	4	SN:B10001--B10012
4	22B-00-11210	SHEET	2	SN:B10001--
5	154-54-23260	SEAT	1	SN:B10001--
6	421-54-22990	PLUG	2	SN:B10001--
7	419-54-31222	FENDER {R.H.}	1	SN:B10001--
8	01010-81230	BOLT	4	SN:B10013--
	01010-81225	BOLT	4	SN:B10001--B10012
9	01643-31232	WASHER	4	SN:B10013--
	01643-31232	WASHER	4	SN:B10001--B10012
10	22B-00-11210	SHEET	2	SN:B10001--
11	154-54-23260	SEAT	1	SN:B10001--
12	421-54-22990	PLUG	2	SN:B10001--
13	419-54-31230	BRACKET {L.H.}	1	SN:B10001--
14	01010-81225	BOLT	2	SN:B10001--
15	01643-31232	WASHER	2	SN:B10001--
16	01010-81230	BOLT	2	SN:B10001--
17	01643-31232	WASHER	2	SN:B10001--
18	419-54-31240	BRACKET {R.H.}	1	SN:B10001--
19	01010-81225	BOLT	2	SN:B10001--
20	01643-31232	WASHER	2	SN:B10001--
21	01010-81230	BOLT	2	SN:B10001--
22	01643-31232	WASHER	2	SN:B10001--
23	419-54-B4110	SHIM	2	SN:B10001--

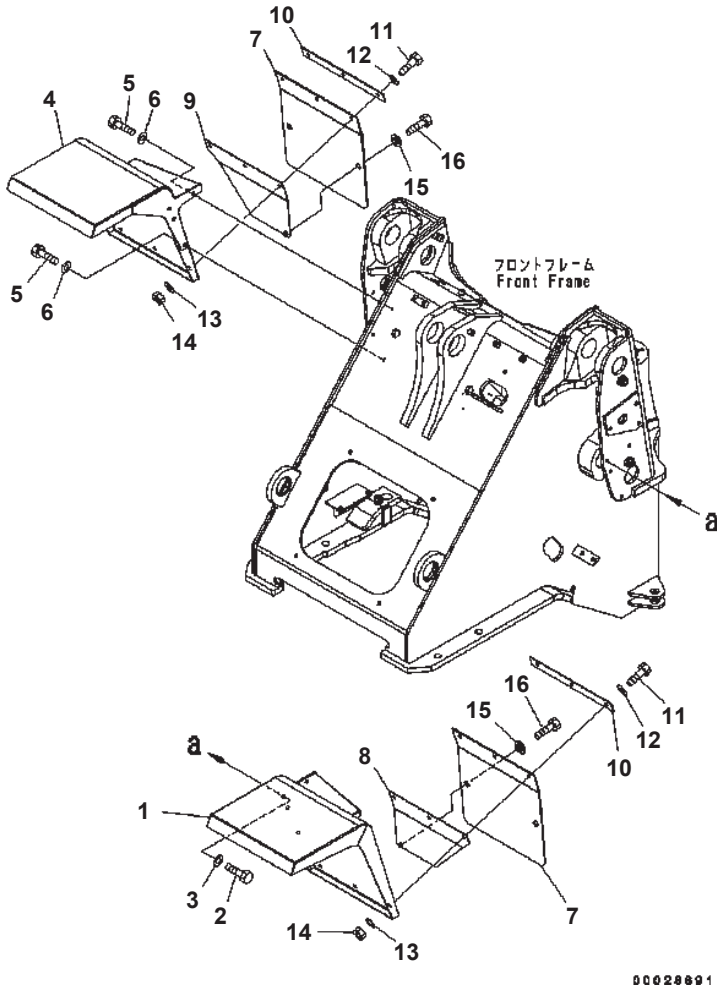

WA320-5 S/N B10001-UP

FRONT FENDER

Item	Part No.	Description	Qty	Options
1	419-54-34221	FENDER {L.H.}	1	SN:B10001--
2	01010-81225	BOLT	4	SN:B10001--
3	01643-31232	WASHER	4	SN:B10001--
4	419-54-34231	FENDER {R.H.}	1	SN:B10001--
5	01010-81225	BOLT	4	SN:B10001--
6	01643-31232	WASHER	4	SN:B10001--
7	419-54-34170	SHEET	2	SN:B10001--
8	419-54-34151	PLATE {L.H.}	1	SN:B10001--
9	419-54-34161	PLATE {R.H.}	1	SN:B10001--
10	418-54-24570	PLATE	2	SN:B10001--
11	01010-81230	BOLT	6	SN:B10001--
12	01643-31232	WASHER	6	SN:B10001--
13	01643-31232	WASHER	6	SN:B10001--
14	01580-11210	NUT	6	SN:B10001--
15	203-54-55660	COLLAR	2	SN:B10001--
16	01010-81025	BOLT	2	SN:B10001--

Ref. M4210-01A0 Page 270290

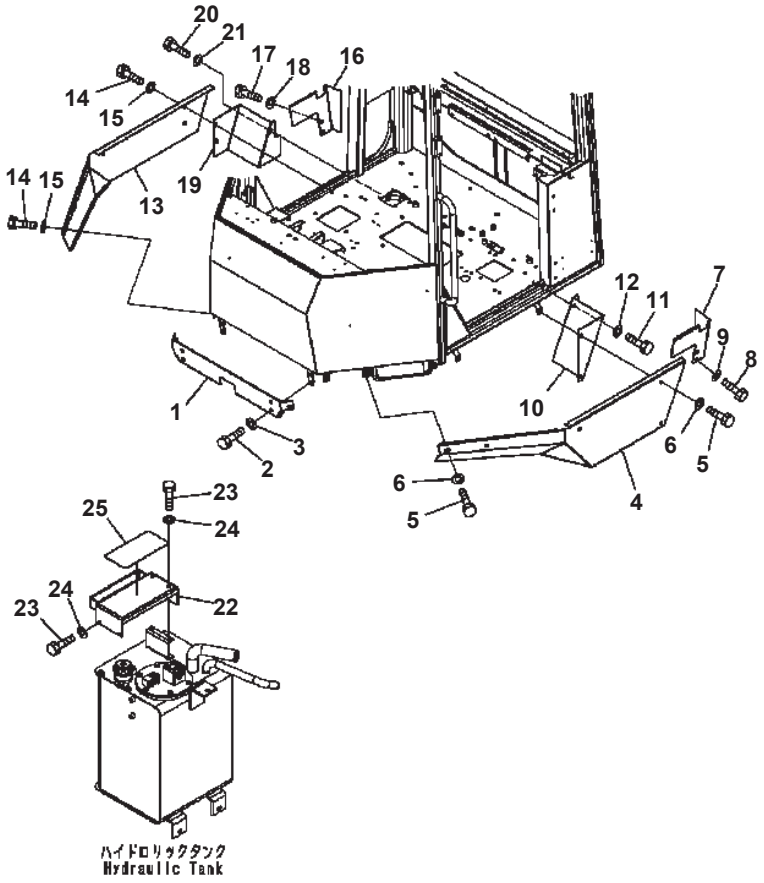

FLOOR COVER

Item	Part No.	Description	Qty	Options
1	419-54-34312	COVER	1	SN:B10001--
2	01010-81030	BOLT	4	SN:B10001--
3	01643-31032	WASHER	4	SN:B10001--
4	419-54-34322	COVER {L.H.}	1	SN:B10001--
5	01010-81030	BOLT	5	SN:B10001--
6	01643-31032	WASHER	5	SN:B10001--
7	419-54-34343	PLATE {L.H.}	1	SN:B10001--
8	01010-81030	BOLT	2	SN:B10001--
9	01643-31032	WASHER	2	SN:B10001--
10	419-54-34411	COVER {L.H.}	1	SN:B10001--
11	01010-81030	BOLT	1	SN:B10001--
12	01643-31032	WASHER	1	SN:B10001--
13	419-54-34332	COVER {R.H.}	1	SN:B10001--
14	01010-81030	BOLT	5	SN:B10001--
15	01643-31032	WASHER	5	SN:B10001--
16	419-54-34353	PLATE {R.H.}	1	SN:B10001--
17	01010-81030	BOLT	2	SN:B10001--
18	01643-31032	WASHER	2	SN:B10001--
19	419-54-34421	COVER {R.H.}	1	SN:B10001--
20	01010-81030	BOLT	1	SN:B10001--
21	01643-31032	WASHER	1	SN:B10001--
22	419-54-34380	COVER	1	SN:B10001--
23	01010-81020	BOLT	4	SN:B10001--
24	01643-31032	WASHER	4	SN:B10001--
25	417-06-11321	PLATE	1	SN:B10001--

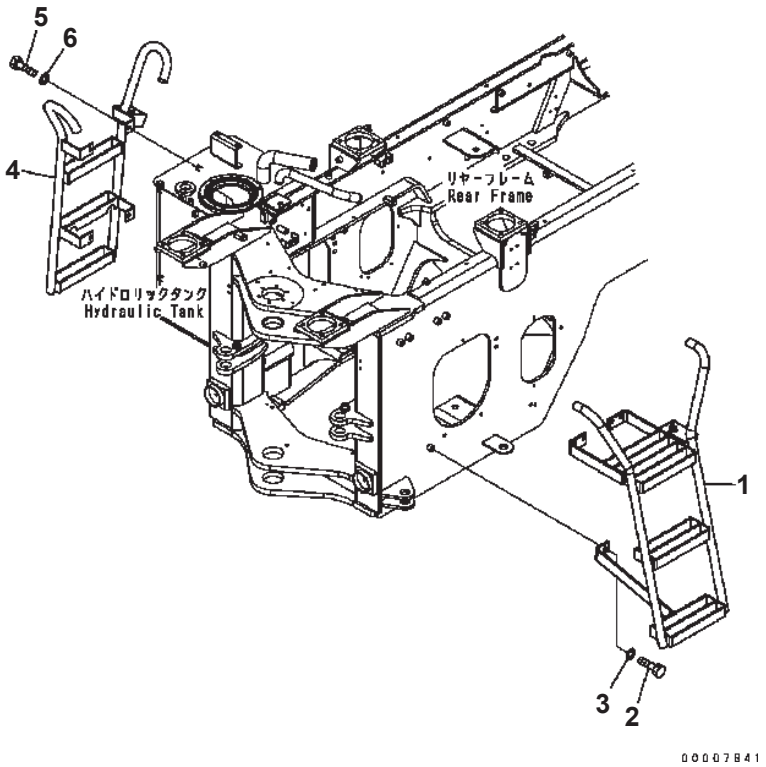

LADDER

Item	Part No.	Description	Qty	Options
1	418-54-35510	LADDER {L.H.}	1	SN:B10001--
2	01010-81225	BOLT	5	SN:B10001--
3	01643-31232	WASHER	5	SN:B10001--
4	419-54-34122	LADDER {R.H.}	1	SN:B10001--
5	01010-81225	BOLT	4	SN:B10001--
6	01643-31232	WASHER	4	SN:B10001--

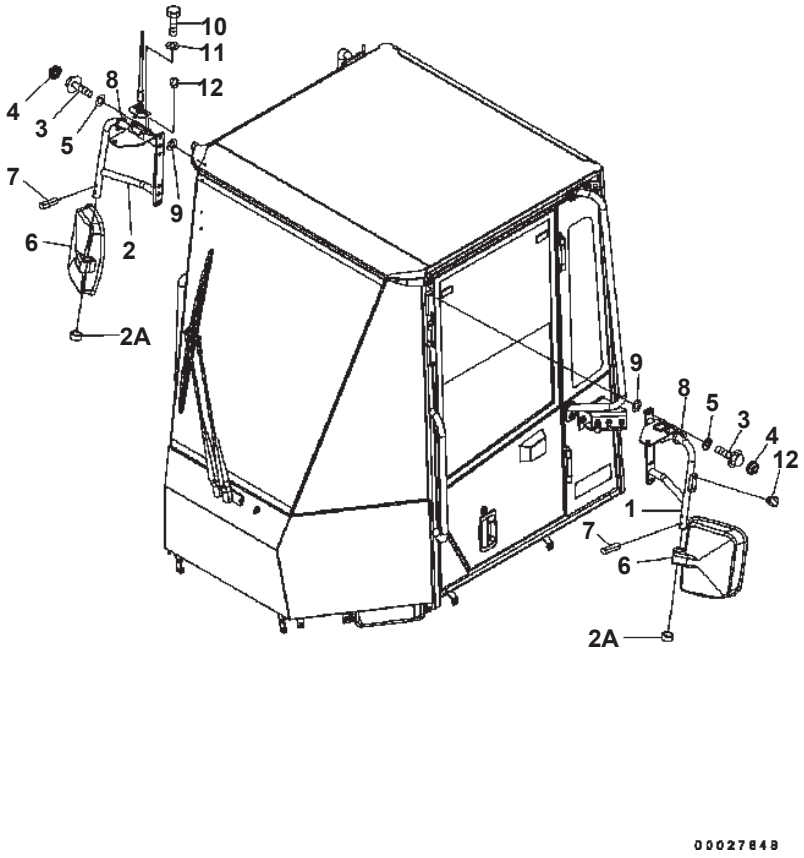

MIRROR

Item	Part No.	Description	Qty	Options
1	418-54-34851	STAY {L.H.}	1	SN:B10001--
2	418-54-34862	STAY {R.H.}	1	SN:B10001--
2A	22M-54-26180	CAP	2	SN:B10001--
3	01435-01025	BOLT	8	SN:B10001--
4	363-54-31450	CAP	8	SN:B10001--
5	01643-31032	WASHER	8	SN:B10001--
6	421-54-25610	MIRROR	2	SN:B10001--
	421-54-25620	· BUSHING	2	SN:B10001--
	421-54-25630	· HOLDER	1	SN:B10001--
	421-54-25640	· LENS	1	SN:B10001--
	421-54-25650	· FRAME	1	SN:B10001--
	421-54-25660	· SCREW	4	SN:B10001--
7	04025-00632	PIN {SPRING}	2	SN:B10001--
8	08034-40521	BAND	2	SN:B10001--
9	01640-21016	WASHER	8	SN:B10001--
10	01023-70416	BOLT	2	SN:B10021--
	01023-20416	BOLT	2	SN:B10001--B10020
11	01643-30623	WASHER	2	SN:B10001--
12	07049-01012	PLUG	4	SN:B10001--

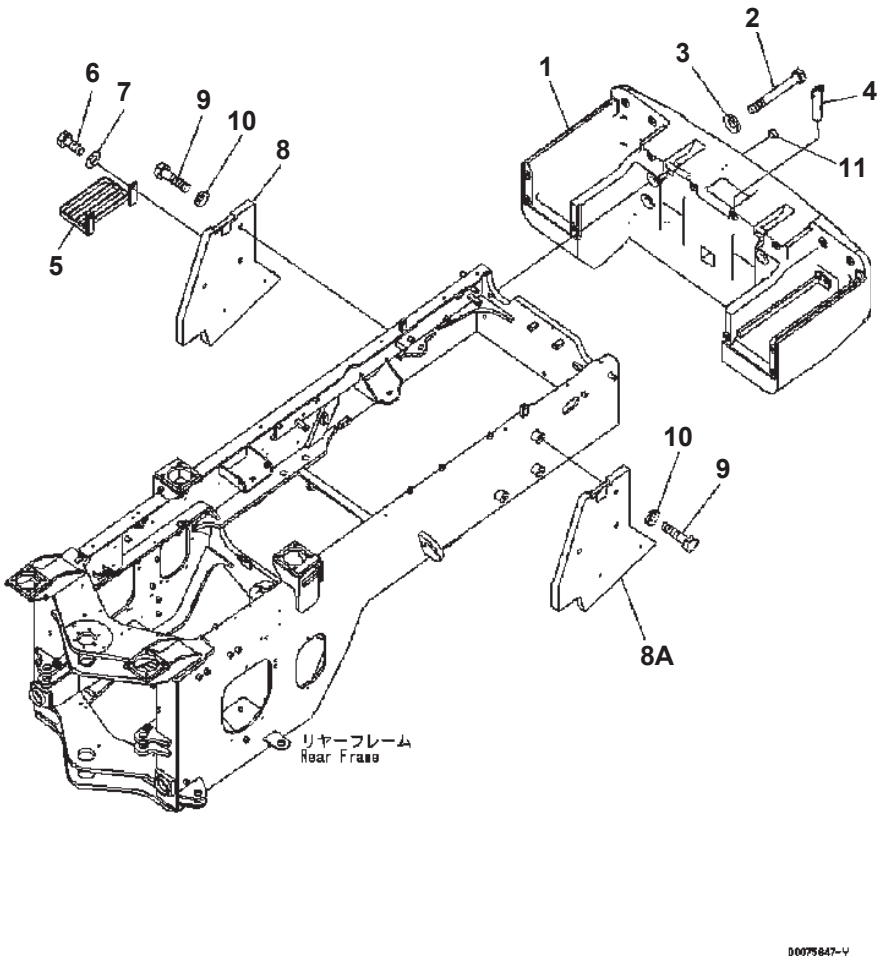

COUNTER WEIGHT (ADDITIONAL WEIGHT)

Item	Part No.	Description	Qty	Options
1	419-46-35210	COUNTER WEIGHT	1	SN:B10001--
2	01011-62480	BOLT	4	SN:B10001--
3	01643-32060	WASHER	4	SN:B10001--
4	418-46-35140	PIN	1	SN:B10001--
5	418-04-31181	STEP	1	SN:B10001--
6	01010-81235	BOLT	2	SN:B10001--
7	01643-31232	WASHER	2	SN:B10001--
8	419-975-3112	COUNTER WEIGHT	1	SN:B10254--
	419-975-3112	COUNTER WEIGHT	2	SN:B10017--B10253
8A	419-975-B110	COUNTER WEIGHT	1	SN:B10254--
9	01010-82090	BOLT	4	SN:B10001--
10	01643-32060	WASHER	4	SN:B10001--
11	07049-01012	PLUG	4	SN:B10001--

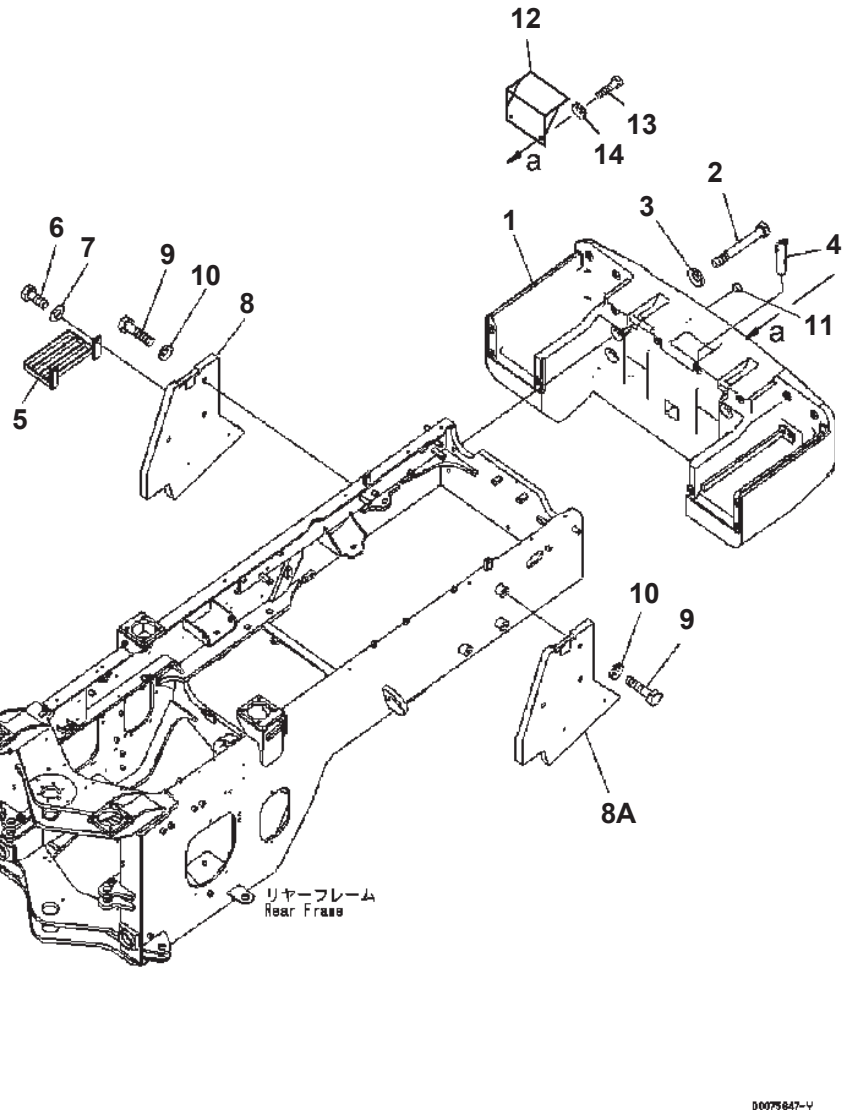

COUNTER WEIGHT (ADDITIONAL WEIGHT) (SUGAR CANE)

Item	Part No.	Description	Qty	Options
1	419-46-35210	COUNTER WEIGHT	1	SN:B10001--
2	01011-62480	BOLT	4	SN:B10001--
3	01643-32060	WASHER	4	SN:B10001--
4	418-46-35140	PIN	1	SN:B10001--
5	418-04-31181	STEP	1	SN:B10001--
6	01010-81235	BOLT	2	SN:B10001--
7	01643-31232	WASHER	2	SN:B10001--
8	419-975-3112	COUNTER WEIGHT	1	SN:B10254--
	419-975-3112	COUNTER WEIGHT	2	SN:B10017--B10253
8A	419-975-B110	COUNTER WEIGHT	1	SN:B10254--
9	01010-82090	BOLT	4	SN:B10001--
10	01643-32060	WASHER	4	SN:B10001--
11	07049-01012	PLUG	4	SN:B10001--
12	419-54-B5550	PLATE	1	SN:B10275--
13	01010-81020	BOLT	2	SN:B10275--
14	01643-31032	WASHER	2	SN:B10275--

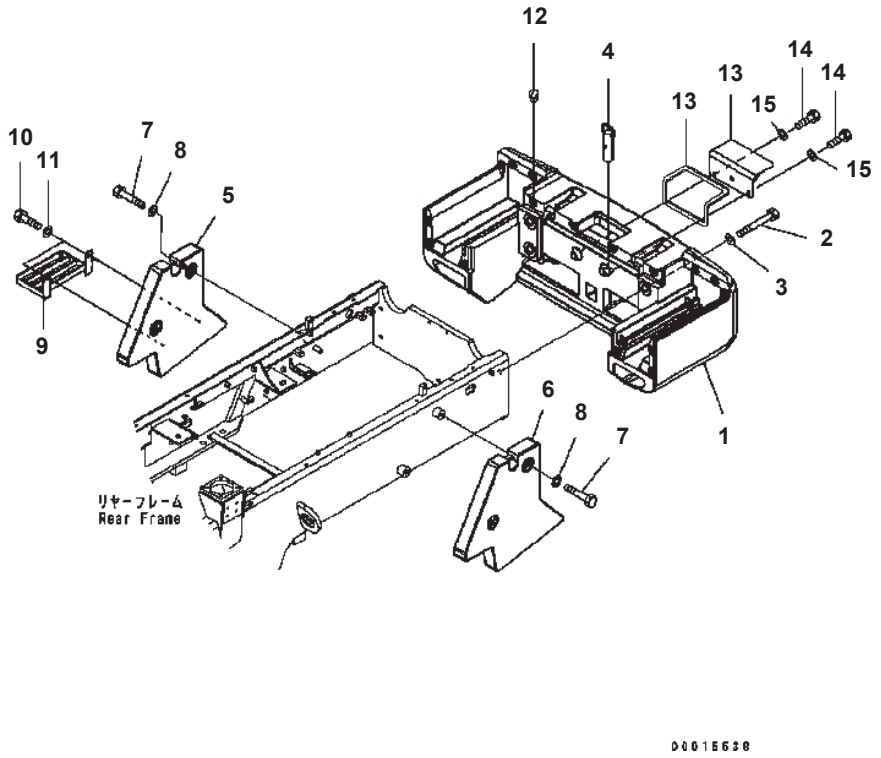

COUNTER WEIGHT (ADDITIONAL WEIGHT) (TROPICAL SPEC)

Item	Part No.	Description	Qty	Options
1	417-46-35210	COUNTER WEIGHT	1	SN:B10001--
2	01011-62480	BOLT	4	SN:B10001--
3	01643-32460	WASHER	4	SN:B10001--
4	418-46-35140	PIN	1	SN:B10001--
5	418-975-3114	COUNTER WEIGHT	1	SN:B10001--
6	418-975-B150	COUNTER WEIGHT	1	SN:B10001--
7	01010-82065	BOLT	4	SN:B10001--
8	01643-32060	WASHER	4	SN:B10001--
9	418-04-31181	STEP	1	SN:B10001--
10	01010-81235	BOLT	2	SN:B10001--
11	01643-31232	WASHER	2	SN:B10001--
12	07049-01012	PLUG	4	SN:B10001--
13	417-54-B5410	COVER, ASS'Y	1	SN:B10579--
	417-54-B5420	· PLATE	1	SN:B10579--
	12Y-03-11840	· SHEET	1	SN:B10579--
	□417-54-B5540	PLATE ASS'Y	1	SN:B10001--B10578
14	01010-81020	BOLT	2	SN:B10001--
15	01643-31032	WASHER	2	SN:B10001--

WHEEL AND ITS RELATED PARTS

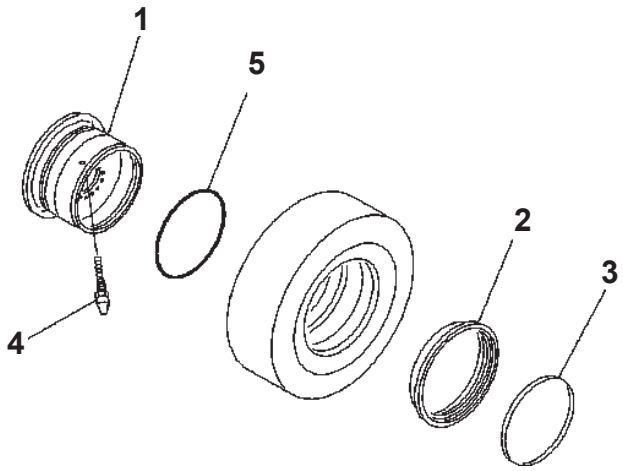

WA320-5 S/N B10001-UP

RIM (FOR 20.5-25 TUBELESS TIRE)

Item	Part No.	Description	Qty	Options
	419-30-B1400	WHEEL ASS'Y	4	SN:B10001--
1	419-30-B1410	· BASE	1	SN:B10001--
2	418-30-31240	· FLANGE	1	SN:B10001--
3	418-30-31250	· RING	1	SN:B10001--
4	09280-00040	· VALVE	1	SN:B10001--
5	419-30-11630	· O-RING	1	SN:B10001--

Ref. S0110-01A0 Page 300010

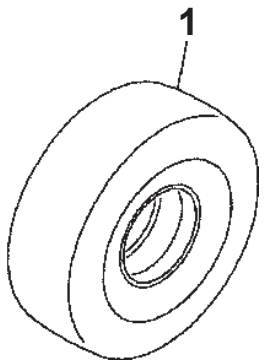

WA320-5 S/N B10001-UP

TIRE (20.5-25-12PR-L3. TUBELESS TIRE)

Item	Part No.	Description	Qty	Options
1	419-X17-1110	TIRE	4	SN:B10001--

Ref. S0120-01A0 Page 300020

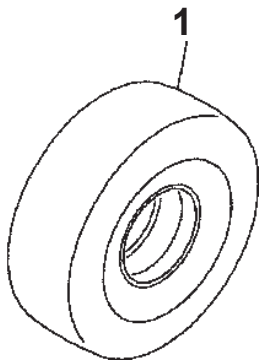

WA320-5 S/N B10001-UP

TIRE (20.5-25-16PR-L3, TUBE LESS)

Item	Part No.	Description	Qty	Options
1	423-X19-1130	TIRE	4	SN:B10001--

Ref. S0120-01A1 Page 300030

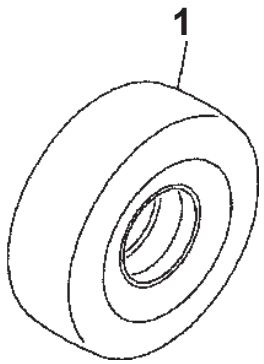

WA320-5 S/N B10001-UP

TIRE (20.5-25-L2)

Item	Part No.	Description	Qty	Options
1	419-X51-1110	TIRE	4	SN:B10001--

Ref. S0120-01A1A Page 300040

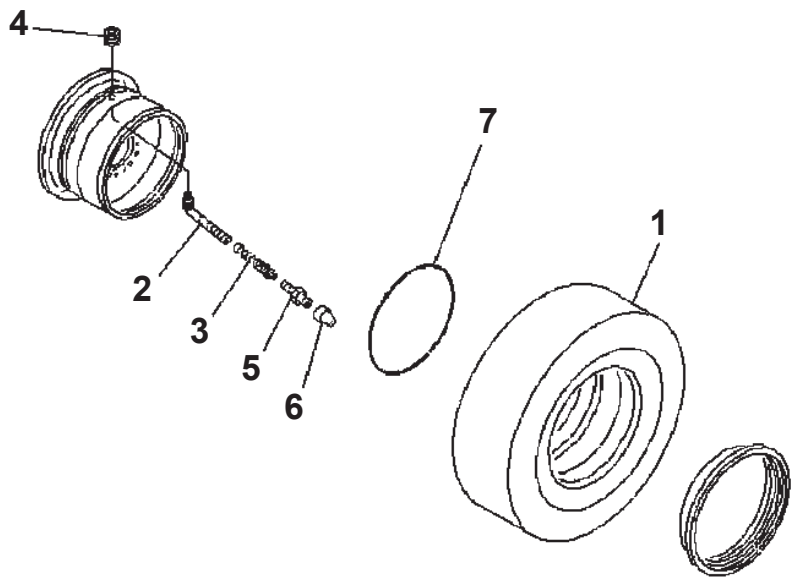

WA320-5 S/N B10001-UP

TIRE (20.5R25-L3, TUBELESS TIRE)

Item	Part No.	Description	Qty	Options
1	423-X86-2110	TIRE	4	SN:B10001--
	09280-10040	VALVE	4	SN:B10001--
2	09280-10130	· STEM	1	SN:B10001--
3	09281-00041	· CORE	1	SN:B10001--
4	09283-00000	· SEAT	1	SN:B10001--
5	09285-00000	· ADAPTER	1	SN:B10001--
6	09282-00017	· CAP	1	SN:B10001--
7	419-30-11630	O-RING	4	SN:B10001--

Ref. S0120-01A2 Page 300050

WORK EQUIPMENT

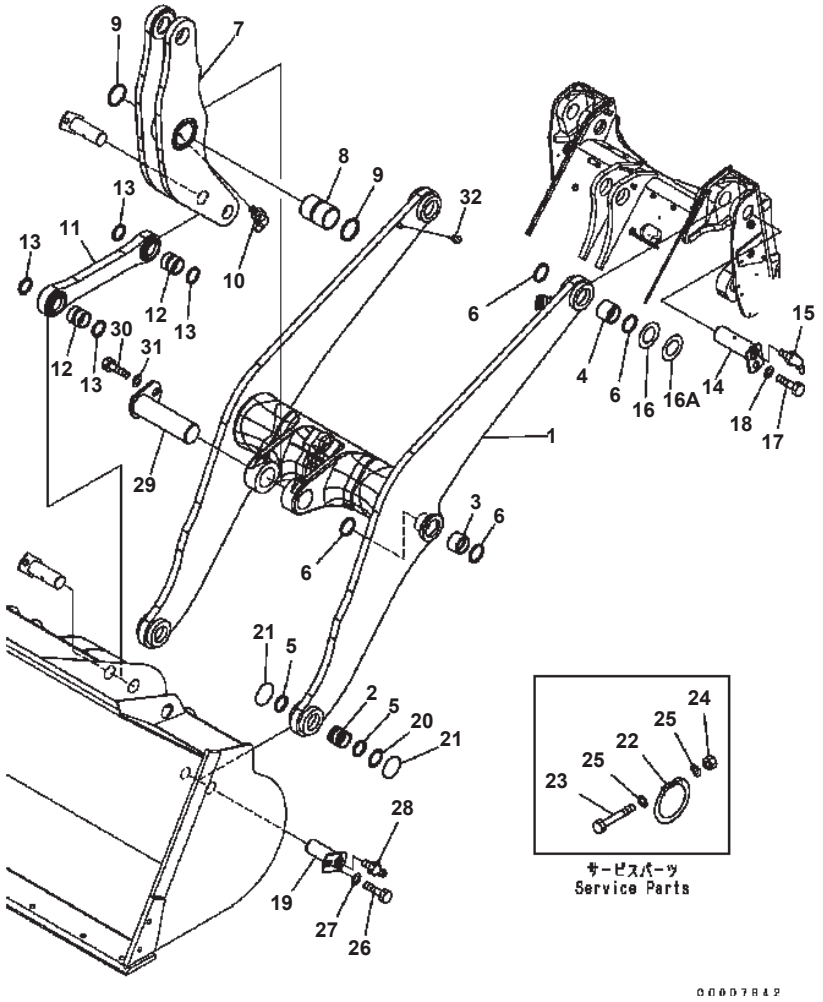

LIFT ARM AND BELLCRANK

Item	Part No.	Description	Qty	Options
	419-70-31501	BOOM ASS'Y	1	SN:B10001--
1	☆	· BOOM	1	SN:B10001--
2	419-70-21810	· BUSHING	2	SN:B10001--
3	419-70-31810	· BUSHING	2	SN:B10001--
4	419-70-11890	· BUSHING	2	SN:B10001--
5	419-09-11110	· SEAL {DUST}	4	SN:B10001--
6	424-09-12320	· SEAL {DUST}	8	SN:B10001--
	419-70-31203	BELLCRANK ASS'Y	1	SN:B10205--
	□419-70-31202	BELLCRANK ASS'Y	1	SN:B10138--B10204
	□419-70-31201	BELLCRANK ASS'Y	1	SN:B10001--B10137
7	☆	· BELLCRANK	1	SN:B10205--
	☆	· BELLCRANK	1	SN:B10138--B10204
	☆	· BELLCRANK	1	SN:B10001--B10137
8	419-70-31870	· BUSHING	1	SN:B10001--
9	421-09-11320	· SEAL {DUST}	2	SN:B10001--
10	07020-00900	· FITTING {GREASE}	1	SN:B10001--
	419-70-31301	LINK ASS'Y	1	SN:B10001--
11	☆	· LINK	1	SN:B10001--
12	419-70-11820	· BUSHING	2	SN:B10001--
13	419-09-11110	· SEAL {DUST}	4	SN:B10001--
14	419-70-31220	PIN	2	SN:B10001--
15	07020-00675	FITTING {GREASE}	2	SN:B10001--
16	419-70-11460	SHIM¤ 1.5MM	2	SN:B10001--
	419-70-11470	SHIM¤ 3.0MM	2	SN:B10001--
16A	419-70-B4210	SPACER	2	SN:B10001--
17	01010-81625	BOLT	2	SN:B10001--
18	421-70-11280	WASHER	2	SN:B10001--
19	419-70-31921	PIN	2	SN:B10205--
	□419-70-31920	PIN	2	SN:B10001--B10204
20	419-70-11420	SHIM¤ 1.5MM	2	SN:B10001--
	419-70-11430	SHIM¤ 3.0MM	2	SN:B10001--
21	☆	O-RING	4	SN:B10001--
22	419-70-11410	O-RING	4	SN:B10001--
23	419-70-11490	BOLT	4	SN:B10001--
24	01596-00606	NUT	4	SN:B10001--
25	01641-20608	WASHER	8	SN:B10001--
26	01010-81625	BOLT	2	SN:B10001--
27	421-70-11280	WASHER	2	SN:B10001--
28	07020-00000	FITTING {GREASE}	2	SN:B10001--
29	419-70-31960	PIN	1	SN:B10001--

WA320-5 S/N B10001-UP

LIFT ARM AND BELLCRANK

Item	Part No.	Description	Qty	Options
30	01010-81630	BOLT	1	SN:B10001--
31	421-70-11280	WASHER	1	SN:B10001--
32	07049-01012	PLUG	1	SN:B10017--

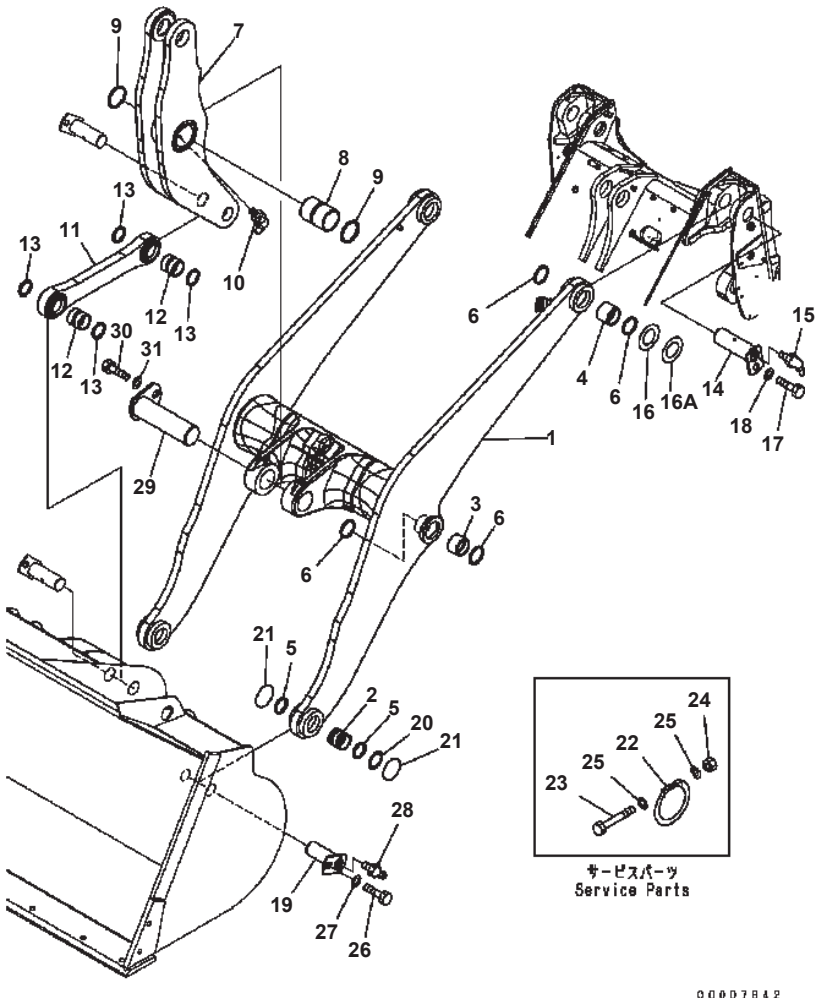

LIFT ARM AND BELLCRANK (3-SPOOL VALVE)

Item	Part No.	Description	Qty	Options
	419-877-3370	BOOM ASS'Y	1	SN:B10001--
1	419-877-3361	· BOOM	1	SN:B10001--
2	419-70-21810	· BUSHING	2	SN:B10001--
3	419-70-31810	· BUSHING	2	SN:B10001--
4	419-70-11890	· BUSHING	2	SN:B10001--
5	419-09-11110	· SEAL	4	SN:B10001--
6	424-09-12320	· SEAL	8	SN:B10001--
	419-70-31203	BELLCRANK ASS'Y	1	SN:B10205--
	□419-70-31202	BELLCRANK ASS'Y	1	SN:B10138--B10204
	□419-70-31201	BELLCRANK ASS'Y	1	SN:B10001--B10137
7	☆	· BELLCRANK	1	SN:B10205--
	☆	· BELLCRANK	1	SN:B10138--B10204
	☆	· BELLCRANK	1	SN:B10001--B10137
8	419-70-31870	· BUSHING	1	SN:B10001--
9	421-09-11320	· SEAL	2	SN:B10001--
10	07020-00900	· FITTING	1	SN:B10001--
	419-70-31301	LINK ASS'Y	1	SN:B10001--
11	☆	· LINK	1	SN:B10001--
12	419-70-11820	· BUSHING	2	SN:B10001--
13	419-09-11110	· SEAL	4	SN:B10001--
14	419-70-31220	PIN	2	SN:B10001--
15	07020-00675	FITTING	2	SN:B10001--
16	419-70-11460	SHIM¤ 1.5MM	2	SN:B10001--
	419-70-11470	SHIM¤ 3.0MM	2	SN:B10001--
16A	419-70-B4210	SPACER	2	SN:B10001--
17	01010-81625	BOLT	2	SN:B10001--
18	421-70-11280	WASHER	2	SN:B10001--
19	419-70-31921	PIN	2	SN:B10205--
	□419-70-31920	PIN	2	SN:B10001--B10204
20	419-70-11420	SHIM¤ 1.5MM	2	SN:B10001--
	419-70-11430	SHIM¤ 3.0MM	2	SN:B10001--
21	419-70-11480	O-RING	4	SN:B10001--
22	419-70-11410	O-RING	4	SN:B10001--
23	419-70-11490	BOLT	4	SN:B10001--
24	01596-00606	NUT	4	SN:B10001--
25	01641-20608	WASHER	8	SN:B10001--
26	01010-81625	BOLT	2	SN:B10001--
27	421-70-11280	WASHER	2	SN:B10001--
28	07020-00000	FITTING	2	SN:B10001--
29	419-70-31960	PIN	1	SN:B10001--

WA320-5 S/N B10001-UP

LIFT ARM AND BELLCRANK (3-SPOOL VALVE)

Item	Part No.	Description	Qty	Options
30	01010-81630	BOLT	1	SN:B10001--
31	421-70-11280	WASHER	1	SN:B10001--

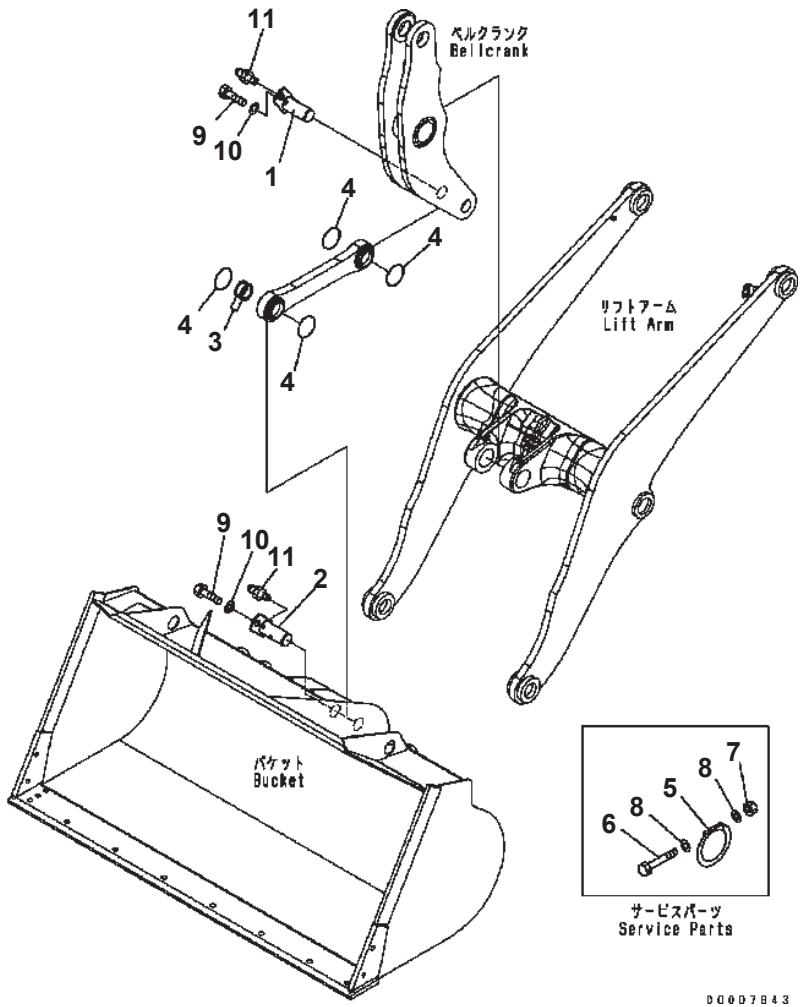

LIFT ARM AND BELLCRANK (MOUNTING PARTS)

Item	Part No.	Description	Qty	Options
1	419-70-31912	PIN	1	SN:B10205--
	□419-70-31911	PIN	1	SN:B10001--B10204
2	419-70-31912	PIN	1	SN:B10205--
	□419-70-31911	PIN	1	SN:B10001--B10204
3	419-70-11420	SHIM¤ 1.5MM	1	SN:B10001--
	419-70-11430	SHIM¤ 3.0MM	1	SN:B10001--
4	☆	O-RING	4	SN:B10001--
5	419-70-11410	O-RING	4	SN:B10001--
6	419-70-11490	BOLT	4	SN:B10001--
7	01596-00606	NUT	4	SN:B10001--
8	01641-20608	WASHER	8	SN:B10001--
9	01010-81625	BOLT	2	SN:B10001--
10	421-70-11280	WASHER	2	SN:B10001--
11	07020-00000	FITTING {GREASE}	2	SN:B10001--

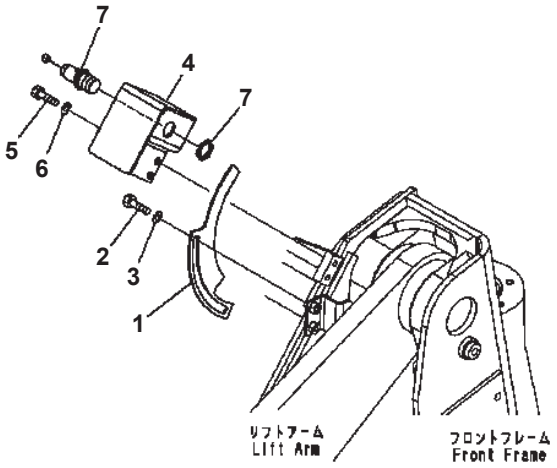

00007844

LIFT ARM AND BELLCRANK (BOOM KICK OUT)

Item	Part No.	Description	Qty	Options
1	419-43-39111	PLATE	1	SN:B10001--
2	01010-81225	BOLT	2	SN:B10001--
3	01643-31232	WASHER	2	SN:B10001--
4	419-43-39122	BRACKET	1	SN:B10001--
5	01010-81225	BOLT	2	SN:B10001--
6	01643-31232	WASHER	2	SN:B10001--
7	56B-06-15610	SWITCH	1	SN:B10001--

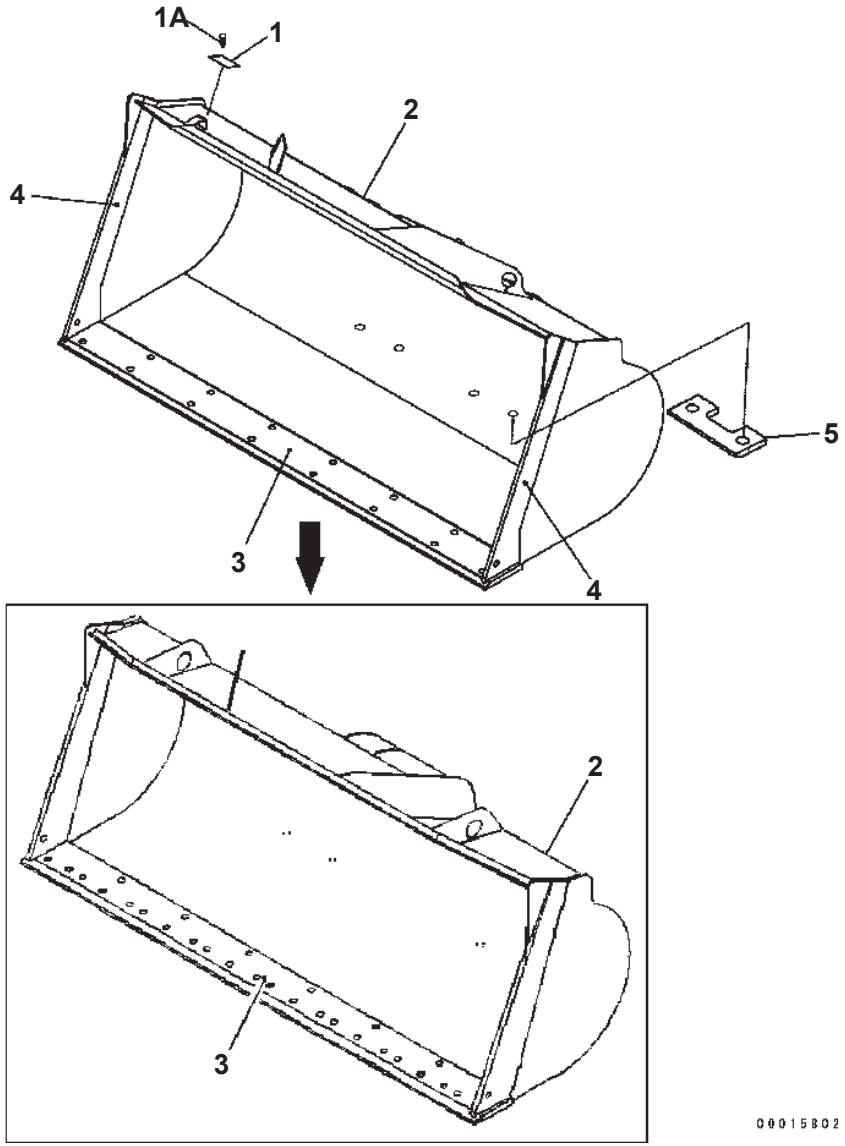

WA320-5 S/N B10001-UP

BUCKET 2.5M3 (WITH B.O.C. 2.7M3)

Item	Part No.	Description	Qty	Options
	419-70-B4101	BUCKET ASS'Y	1	SN:B10235--
	419-70-B4100	BUCKET ASS'Y	1	SN:B10001--B10234
1	416-70-22190	· PLATE NAME (LIMITED SUPPLY)	1	SN:B10001--
1A	04418-13060	· SCREW	4	SN:B10021--
2	419-70-B4111	· BUCKET	1	SN:B10235--
	419-70-B4110	· BUCKET	1	SN:B10001--B10234
3	419-T65-2120	· · EDGE	1	SN:B10235--
	419-70-12221	· · EDGE	1	SN:B10001--B10234
4	419-70-B4140	· · PLATE	2	SN:B10001--
5	419-70-B3270	· PLATE {WELDED}	2	SN:B10001--

Ref. T4120-01A5 Page 330050

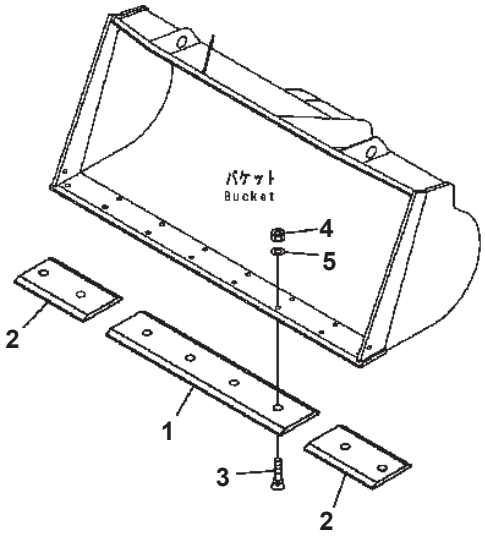

PE48348

BOLT ON CUTTING EDGE

Item	Part No.	Description	Qty	Options
1	419-815-1211	EDGE {CENTER}	1	SN:B10001--
2	418-815-1221	EDGE {SIDE}	2	SN:B10001--
3	02090-11685	BOLT	8	SN:B10001--
4	02290-11625	NUT	8	SN:B10001--
5	01643-32460	WASHER	8	SN:B10001--

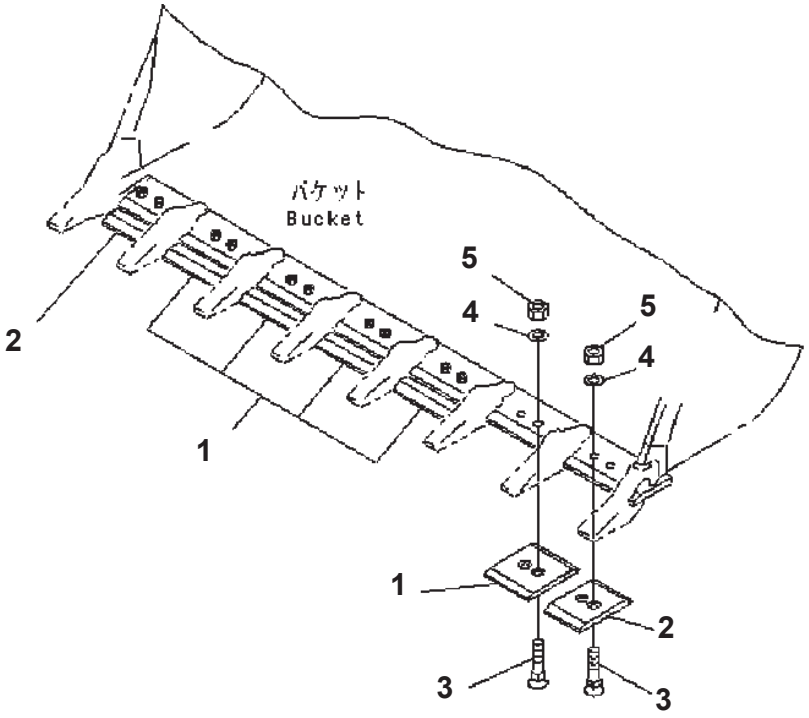

PLE5389

SEGMENT EDGE (#B10235-)

Item	Part No.	Description	Qty	Options
1	419-838-1110	EDGE, CENTER	5	SN:B10235--
2	421-838-1110	EDGE, SIDE	2	SN:B10235--
3	02090-11685	BOLT	14	SN:B10235--
4	01643-22460	WASHER	14	SN:B10235--
5	02290-11625	NUT	14	SN:B10235--

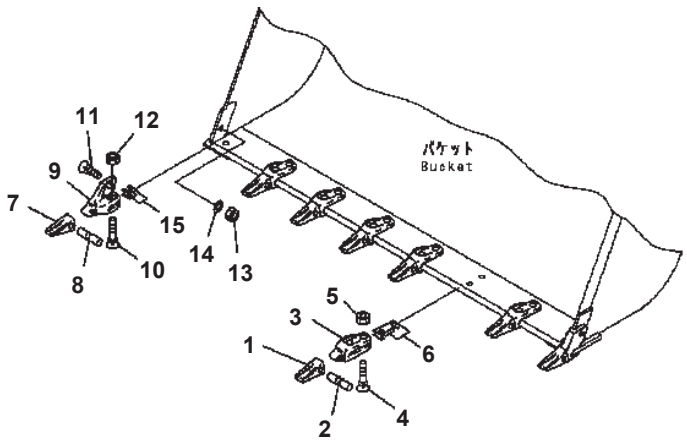

TOOTH (TIP TYPE)

Item	Part No.	Description	Qty	Options
1	202-70-12130	TOOTH	6	SN:B10001--
2	09244-02496	PIN	6	SN:B10001--
3	419-847-1111	ADAPTER	6	SN:B10001--
4	02090-11695	BOLT	12	SN:B10001--
5	09218-12523	NUT	12	SN:B10001--
6	419-70-13120	SHIM¤ 1.0MM	6	SN:B10001--
	419-70-13130	SHIM¤ 0.5MM	6	SN:B10001--
7	202-70-12130	TOOTH	2	SN:B10001--
8	09244-02496	PIN	2	SN:B10001--
9	419-847-1121	ADAPTER {L.H.}	1	SN:B10001--
	419-847-1131	ADAPTER {R.H.}	1	SN:B10001--
10	02090-11695	BOLT	2	SN:B10001--
11	419-70-13150	BOLT	2	SN:B10001--
12	09218-12523	NUT	2	SN:B10001--
13	02290-11625	NUT	2	SN:B10001--
14	01643-32780	WASHER	2	SN:B10001--
15	419-70-13180	SHIM¤ 1.0MM	2	SN:B10001--
	419-70-13190	SHIM¤ 0.5MM	2	SN:B10001--

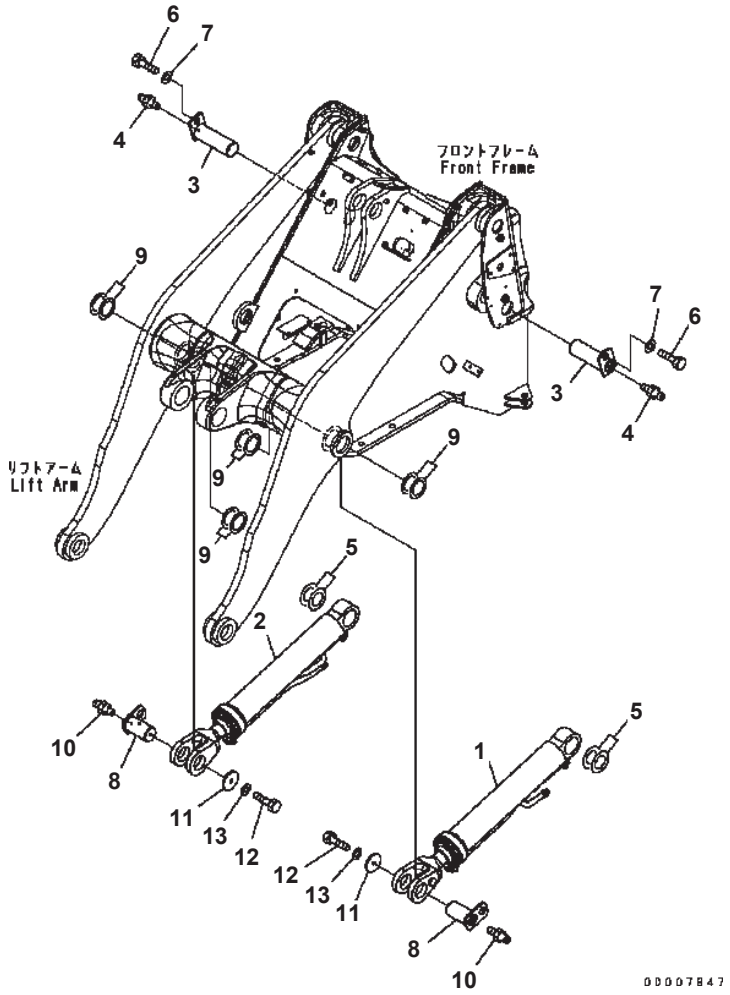

LIFT CYLINDER

Item	Part No.	Description	Qty	Options
1	(707-01-XU360)	CYLINDER GROUP {L.H.}	1	SN:B10001--
2	(707-01-XU370)	CYLINDER GROUP {R.H.}	1	SN:B10001--
3	419-70-31220	PIN	2	SN:B10001--
4	07020-00000	FITTING {GREASE}	2	SN:B10001--
5	419-70-11460	SHIM¤ 1.5MM	2	SN:B10001--
	419-70-11470	SHIM¤ 3.0MM	2	SN:B10001--
6	01010-81625	BOLT	2	SN:B10001--
7	421-70-11280	WASHER	2	SN:B10001--
8	419-70-31232	PIN	2	SN:B10001--
9	423-70-11711	SHIM¤ 1.5MM	4	SN:B10001--
10	07020-00900	FITTING {GREASE}	2	SN:B10001--
11	207-62-51450	PLATE	2	SN:B10001--
12	01010-81635	BOLT	2	SN:B10001--
13	01643-31645	WASHER	2	SN:B10001--

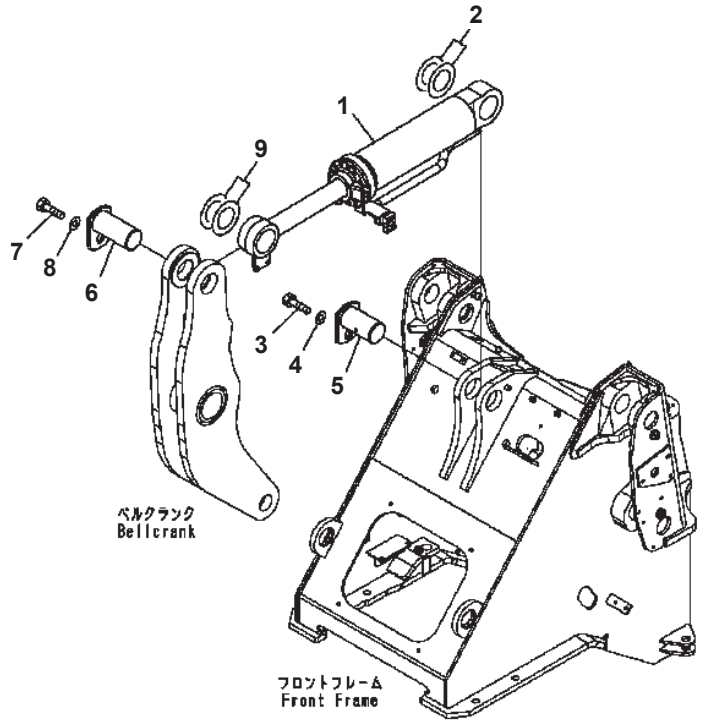

BUCKET CYLINDER

Item	Part No.	Description	Qty	Options
1	(707-01-XU380)	CYLINDER GROUP	1	SN:B10001--
2	423-70-11781	SHIM¤ 1.5MM	1	SN:B10001--
	423-70-11881	SHIM¤ 3.0MM	1	SN:B10001--
	423-70-41960	SHIM¤ 1.0MM	1	SN:B10001--
3	01010-81625	BOLT	1	SN:B10001--
4	421-70-11280	WASHER	1	SN:B10001--
5	419-70-11950	PIN	1	SN:B10001--
6	419-70-11941	PIN	1	SN:B10001--
7	01010-81625	BOLT	1	SN:B10001--
8	421-70-11280	WASHER	1	SN:B10001--
9	423-70-11781	SHIM¤ 1.5MM	1	SN:B10001--
	423-70-11881	SHIM¤ 3.0MM	1	SN:B10001--
	423-70-41960	SHIM¤ 1.0MM	1	SN:B10001--

MARKS AND PLATES

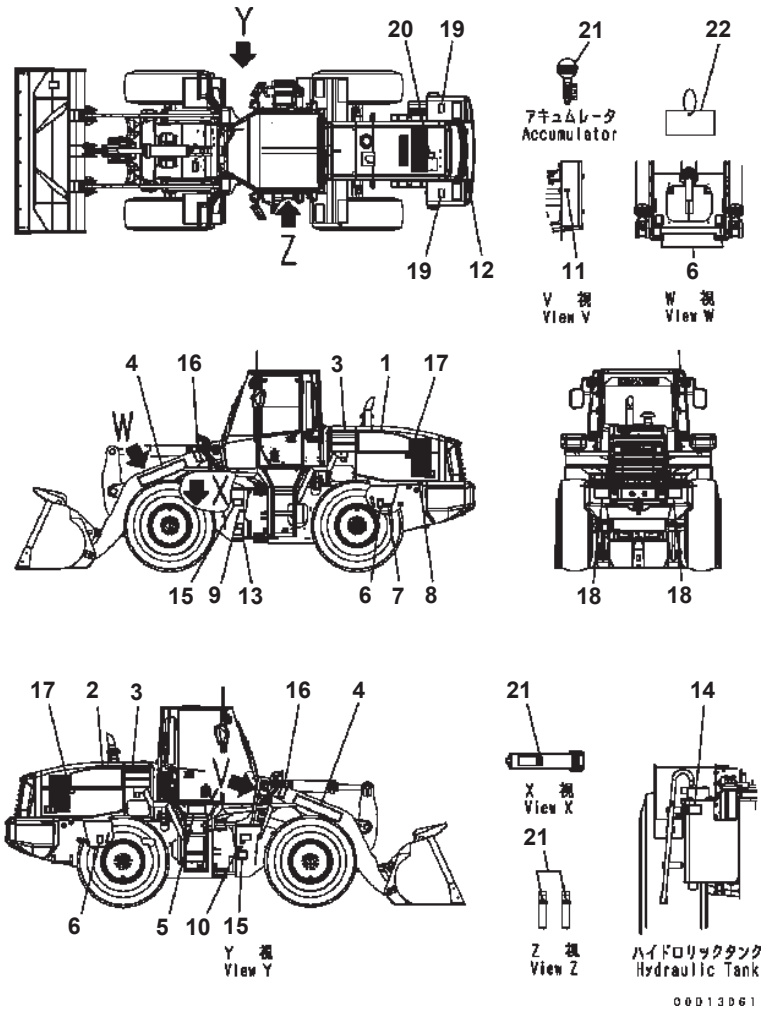

MARKS AND PLATES (PORTUGUESE)

Item	Part No.	Description	Qty	Options
1	419-93-B4140	PLATE {WA320 (L.H.)}	1	SN:B10001--
2	419-93-B4150	PLATE {WA320 (R.H.)}	1	SN:B10001--
3	419-93-22160	PLATE	2	SN:B10001--
4	09690-P0800	PLATE¤ MARK {KOMATSU}	2	SN:B10001--
5	419-93-B2110	OIL CHART	1	SN:B10001--
6	09960-01601	PLATE¤ MARK {LIFTING EYE}	4	SN:B10001--
	419-93-B2120	PLATE¤ MARK	1	SN:B10001--
7	☆	· PLATE¤ MARK {REMOTE GREASE¤ REAR AXLE}	1	SN:B10001--
8	☆	· PLATE¤ MARK {RADIATOR DRAIN}	1	SN:B10001--
9	☆	· PLATE¤ MARK {REMOTE GREASE¤ FRONT¤ L.H.}	1	SN:B10001--
10	☆	· PLATE¤ MARK {REMOTE GREASE¤ FRONT¤ R.H.}	1	SN:B10001--
11	☆	· PLATE¤ MARK {REMOTE GREASE¤ FRONT}	1	SN:B10001--
12	09669-0000E	PLATE¤ CAUTION {FUEL}	1	SN:B10001--
13	09161-27100	PLATE¤ SAFETY {FRAME LOCK}	1	SN:B10314--
	09161-C0641	PLATE¤ SAFETY {FRAME LOCK}	1	SN:B10001--B10313
14	09653-07101	PLATE¤ SAFETY {HYDRAULIC TANK CAP}	1	SN:B10314--
	09653-A0641	PLATE¤ SAFETY {HYDRAULIC TANK CAP}	1	SN:B10001--B10313
15	09162-27000	PLATE¤ SAFETY	2	SN:B10314--
	09162-C0641	PLATE¤ SAFETY	2	SN:B10001--B10313
16	09807-C0883	PLATE¤ SAFETY {KEEP OUT}	2	SN:B10001--
17	09667-07101	PLATE¤ SAFETY {FAN}	2	SN:B10314--
	09667-A0880	PLATE¤ SAFETY {FAN}	2	SN:B10001--B10313
18	09812-17000	PLATE¤ SAFETY {APPROACH}	2	SN:B10314--
	09806-C0883	PLATE¤ SAFETY {APPROACH}	2	SN:B10001--B10313
19	09808-07100	PLATE¤ SAFETY {ELECTRIC SHOCK}	2	SN:B10314--
	09808-A1201	PLATE¤ SAFETY {ELECTRIC SHOCK}	2	SN:B10001--B10313
20	09668-07101	PLATE¤ SAFETY {RADIATOR}	1	SN:B10491--
	□09668-07101	PLATE¤ SAFETY {RADIATOR}	1	SN:B10314--B10490
	09653-A0641	PLATE¤ SAFETY {RADIATOR}	1	SN:B10001--B10313
21	09659-57100	PLATE¤ SAFETY {ACCUMULATOR}	3	SN:B10314--
	09659-A057B	PLATE¤ SAFETY {ACCUMULATOR}	3	SN:B10001--B10313

MARKS AND PLATES (PORTUGUESE)

Item	Part No.	Description	Qty	Options
22	09963-07001	TAG	1	SN:B10314--
	09963-A1640	TAG	1	SN:B10001--B10313

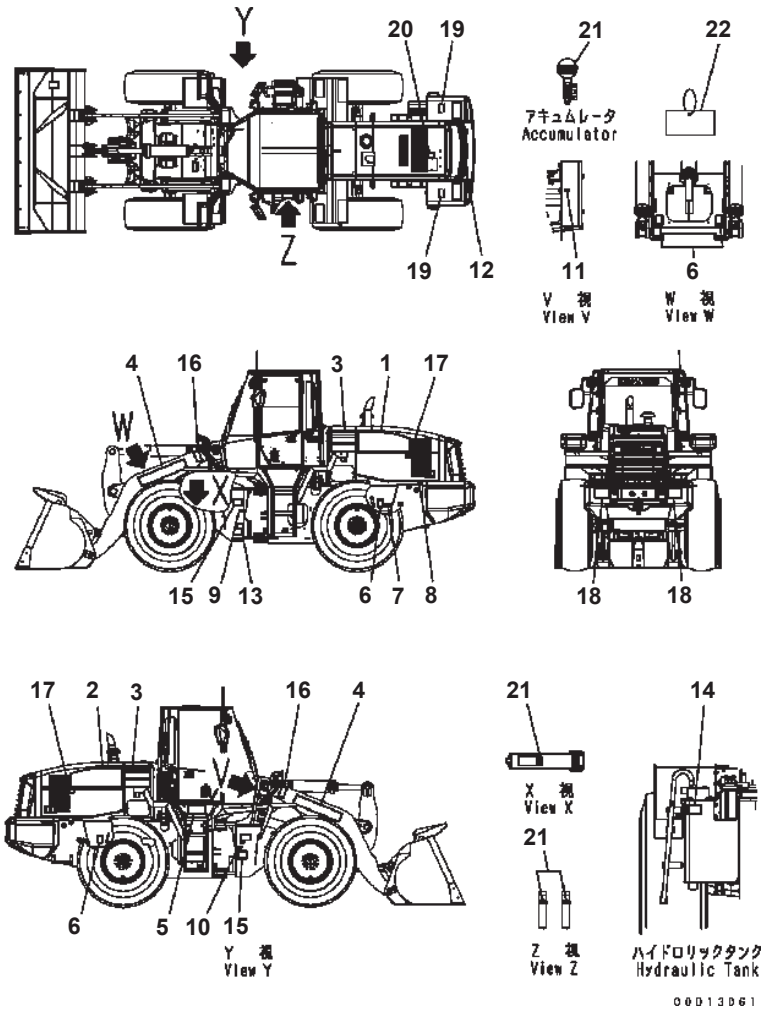

MARKS AND PLATES (PORTUGUESE) (FOR SUGAR CANE) (#B10186-)

Item	Part No.	Description	Qty	Options
1	419-93-B4170	PLATE {WA320 (L.H.)}	1	SN:B10186--
2	419-93-B4180	PLATE {WA320 (R.H.)}	1	SN:B10186--
3	417-93-32230	PLATE	2	SN:B10186--
4	09690-P0800	PLATE¤ MARK {KOMATSU}	2	SN:B10186--
5	419-93-B2110	OIL CHART	1	SN:B10186--
6	09960-01601	PLATE¤ MARK {LIFTING EYE}	4	SN:B10186--
	419-93-B2120	PLATE¤ MARK	1	SN:B10186--
7	☆	· PLATE¤ MARK {REMOTE GREASE¤ REAR AXLE}	1	SN:B10186--
8	☆	· PLATE¤ MARK {RADIATOR DRAIN}	1	SN:B10186--
9	☆	· PLATE¤ MARK {REMOTE GREASE¤ FRONT¤ L.H.}	1	SN:B10186--
10	☆	· PLATE¤ MARK {REMOTE GREASE¤ FRONT¤ R.H.}	1	SN:B10186--
11	☆	· PLATE¤ MARK {REMOTE GREASE¤ FRONT}	1	SN:B10186--
12	09669-0000E	PLATE¤ CAUTION {FUEL}	1	SN:B10186--
13	09161-27100	PLATE¤ SAFETY {FRAME LOCK}	1	SN:B10314--
	09161-C0641	PLATE¤ SAFETY {FRAME LOCK}	1	SN:B10186--B10313
14	09653-07101	PLATE¤ SAFETY {HYDRAULIC TANK CAP}	1	SN:B10314--
	09653-A0641	PLATE¤ SAFETY {HYDRAULIC TANK CAP}	1	SN:B10186--B10313
15	09162-27000	PLATE¤ SAFETY	2	SN:B10314--
	09162-C0641	PLATE¤ SAFETY	2	SN:B10186--B10313
16	09807-C0883	PLATE¤ SAFETY {KEEP OUT}	2	SN:B10186--
17	09667-07101	PLATE¤ SAFETY {FAN}	2	SN:B10314--
	09667-A0880	PLATE¤ SAFETY {FAN}	2	SN:B10186--B10313
18	09812-17000	PLATE¤ SAFETY {APPROACH}	2	SN:B10314--
	09806-C0883	PLATE¤ SAFETY {APPROACH}	2	SN:B10186--B10313
19	09808-07100	PLATE¤ SAFETY {ELECTRIC SHOCK}	2	SN:B10314--
	09808-A1201	PLATE¤ SAFETY {ELECTRIC SHOCK}	2	SN:B10186--B10313
20	09668-07101	PLATE¤ SAFETY {RADIATOR}	1	SN:B10314--
	09653-A0641	PLATE¤ SAFETY {RADIATOR}	1	SN:B10186--B10313
21	09659-57100	PLATE¤ SAFETY {ACCUMULATOR}	4	SN:B10430--
	09659-57100	PLATE¤ SAFETY {ACCUMULATOR}	3	SN:B10314--B10429

WA320-5 S/N B10001-UP

MARKS AND PLATES (PORTUGUESE) (FOR SUGAR CANE) (#B10186-)

Item	Part No.	Description	Qty	Options
	09659-A057B	PLATE¤ SAFETY {ACCUMULATOR}	3	SN:B10186--B10313
22	09963-07001	TAG	1	SN:B10314--
	09963-A1640	TAG	1	SN:B10186--B10313

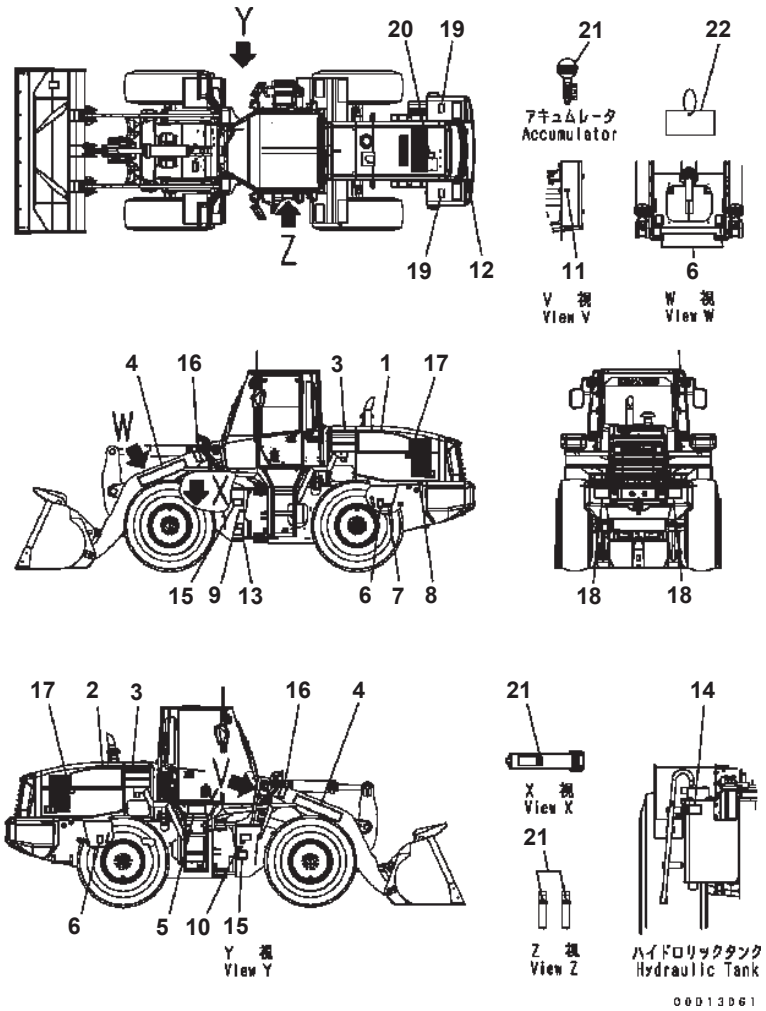

MARKS AND PLATES (SPANISH)

Item	Part No.	Description	Qty	Options
1	419-93-B4140	PLATE {WA320 (L.H.)}	1	SN:B10001--
2	419-93-B4150	PLATE {WA320 (R.H.)}	1	SN:B10001--
3	419-93-22160	PLATE	2	SN:B10001--
4	09690-P0800	PLATE¤ MARK {KOMATSU}	2	SN:B10001--
5	419-V00-3120	OIL CHART	1	SN:B10001--
6	09960-01601	PLATE¤ MARK {LIFTING EYE}	4	SN:B10001--
	417-V00-3110	PLATE¤ MARK	1	SN:B10001--
7	☆	· PLATE¤ MARK {REMOTE GREASE¤ REAR AXLE}	1	SN:B10001--
8	☆	· PLATE¤ MARK {RADIATOR DRAIN}	1	SN:B10001--
9	☆	· PLATE¤ MARK {REMOTE GREASE¤ FRONT¤ L.H.}	1	SN:B10001--
10	☆	· PLATE¤ MARK {REMOTE GREASE¤ FRONT¤ R.H.}	1	SN:B10001--
11	☆	· PLATE¤ MARK {REMOTE GREASE¤ FRONT}	1	SN:B10001--
12	09669-0000E	PLATE¤ CAUTION {FUEL}	1	SN:B10001--
13	09161-21000	PLATE¤ SAFETY {FRAME LOCK}	1	SN:B10001--
14	09653-01001	PLATE¤ SAFETY {HYDRAULIC TANK CAP}	1	SN:B10001--
15	09162-21000	PLATE¤ SAFETY	2	SN:B10001--
16	09807-C0883	PLATE¤ SAFETY {KEEP OUT}	2	SN:B10001--
17	09667-01001	PLATE¤ SAFETY {FAN}	2	SN:B10001--
18	09812-11000	PLATE¤ SAFETY {APPROACH}	2	SN:B10001--
19	09808-01000	PLATE¤ SAFETY {ELECTRIC SHOCK}	2	SN:B10001--
20	09668-01001	PLATE¤ SAFETY {RADIATOR}	1	SN:B10001--
21	09659-51000	PLATE¤ SAFETY {ACCUMULATOR}	3	SN:B10001--
22	09963-01001	TAG	1	SN:B10001--

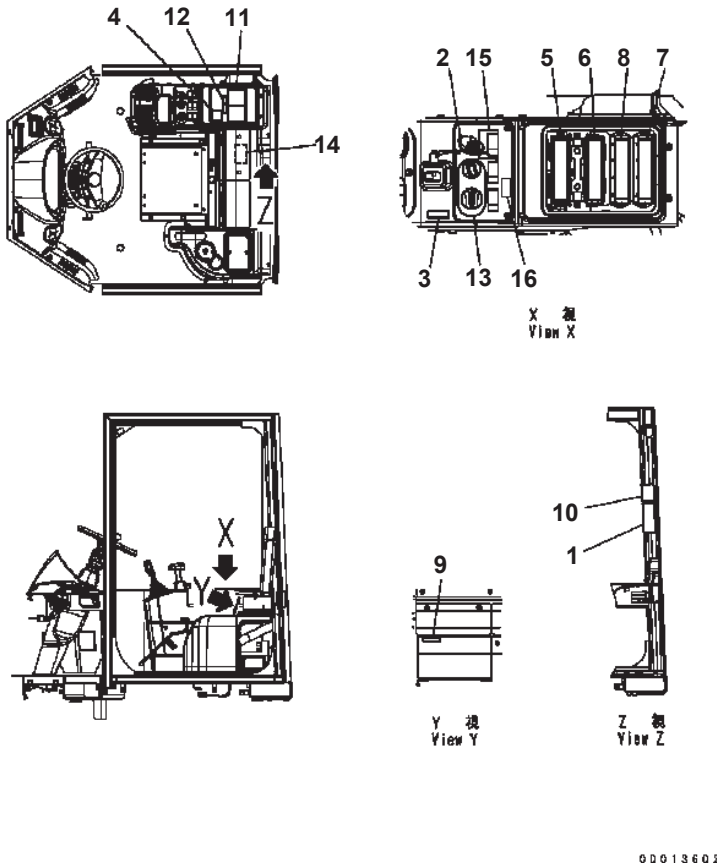

FLOOR DECAL (PORTUGUESE)

Item	Part No.	Description	Qty	Options
	418-93-B1151	PLATE	1	SN:B10314--
	418-93-B1150	PLATE	1	SN:B10001--B10313
1	☆	· PLATE {STARTING}	1	SN:B10001--
2	☆	· PLATE{MAIN SWITCH}	1	SN:B10001--
3	☆	· PLATE {LEVER LOCK}	1	SN:B10001--
4	☆	· PLATE {SHIFT PATTERN}	1	SN:B10001--
5	☆	· PLATE {RELAY}	1	SN:B10001--
6	☆	· PLATE {FUSE}	1	SN:B10001--
7	☆	· PLATE {FUSE}	1	SN:B10001--
8	☆	· PLATE {FILTER}	1	SN:B10001--
9	☆	· PLATE	1	SN:B10001--
10	☆	· PLATE¤ SAFETY {READ MANUAL}	1	SN:B10001--
11	☆	· PLATE¤ SAFETY	1	SN:B10001--
12	☆	· PLATE¤ SAFETY {ELECTRIC SHOCK}	1	SN:B10314--
	☆	· PLATE¤ SAFETY {ELECTRIC SHOCK}	1	SN:B10001--B10313
13	418-93-B1120	PLATE {HST SPEED CONTROL}	1	SN:B10001--
14	418-93-B1160	PLATE {RELAY}	1	SN:B10001--
15	418-93-B1140	DECAL {TRACTION CONTROL}	1	SN:B10001--
16	421-93-B1010	PLATE (SUGAR CANE)	1	SN:B10186--

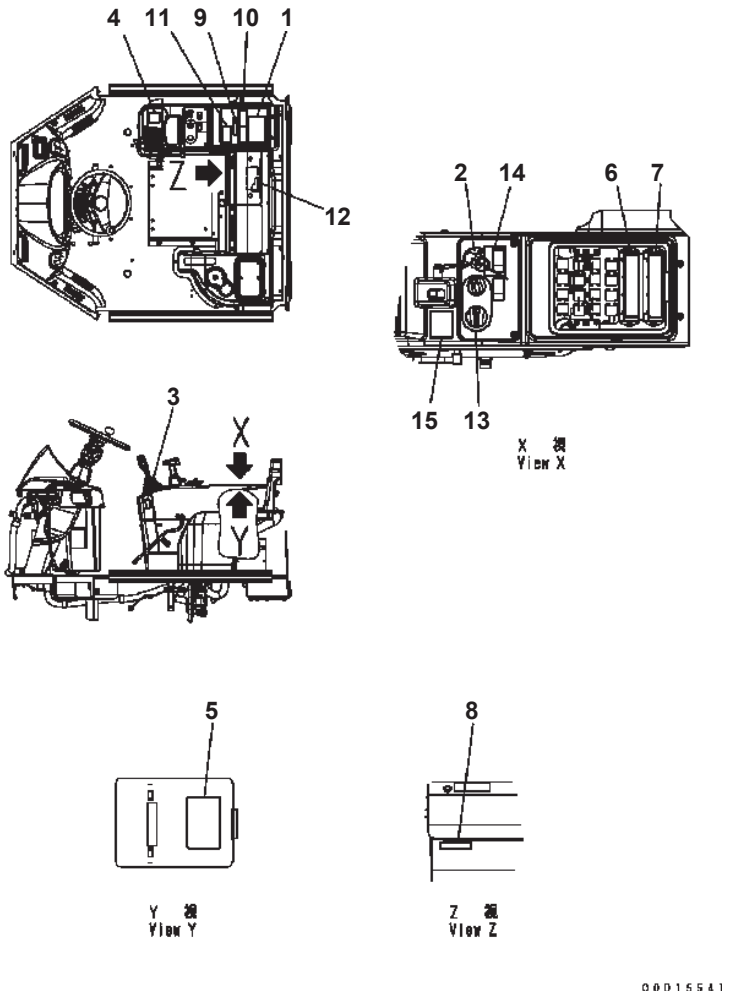

FLOOR DECAL (SPANISH)

Item	Part No.	Description	Qty	Options
	418-V00-3210	PLATE	1	SN:B10001--
1	☆	· PLATE {STARTING}	1	SN:B10001--
2	☆	· PLATE{MAIN SWITCH}	1	SN:B10001--
3	☆	· PLATE {LEVER LOCK}	1	SN:B10001--
4	☆	· PLATE {SHIFT PATTERN}	1	SN:B10001--
5	☆	· PLATE {RELAY}	1	SN:B10001--
6	☆	· PLATE {FUSE}	1	SN:B10001--
7	☆	· PLATE {FUSE}	1	SN:B10001--
8	☆	· PLATE {FILTER}	1	SN:B10001--
9	☆	· PLATE		SN:B10001--
10	09651-01001	PLATE¤ SAFETY {READ MANUAL}	1	SN:B10001--
11	09654-01001	PLATE¤ SAFETY {WORK EQUIPMENT} LEVER LOCK}	1	SN:B10001--
12	09801-11001	PLATE¤ SAFETY {ELECTRIC SHOCK}	1	SN:B10001--
13	418-93-B1180	PLATE {HST SPEED CONTROL}	1	SN:B10001--
14	418-V00-3220	PLATE, RELAY	1	SN:B10001--
15	418-93-B1190	DECAL {TRACTION CONTROL}	1	SN:B10001--

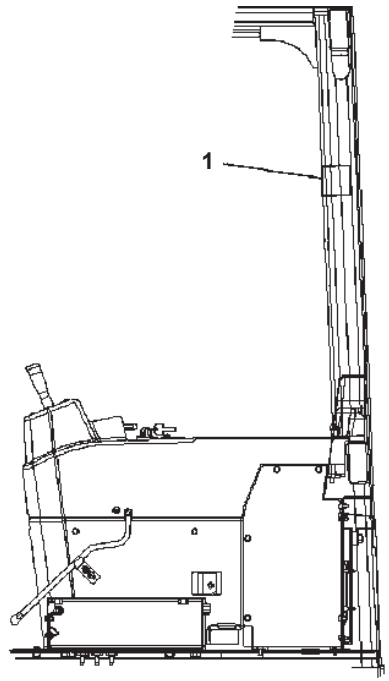

KOMTRAX PLATE (#B10345-)

Item	Part No.	Description	Qty	Options
1	09845-00480	PLATE, CAUTION, BLAST SITE	1	SN:B10345--

AUXILIARY PARTS AND TOOL

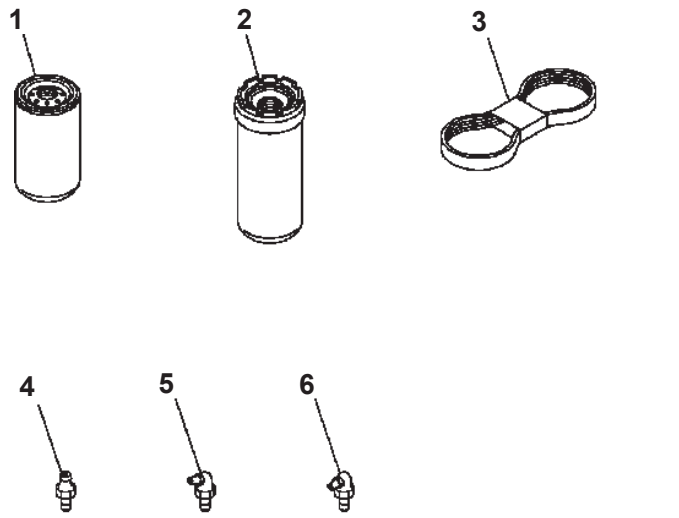

WA320-5 S/N B10001-UP

SPARE PARTS

Item	Part No.	Description	Qty	Options
1	418-18-34160	CARTRIDGE	1	SN:B10001--
2	419-60-35152	CARTRIDGE	1	SN:B10001--
3	6732-81-6170	BELT	1	SN:B10001--
4	07020-00000	FITTING, GREASE	4	SN:B10001--
5	07020-00675	FITTING, GREASE	4	SN:B10001--
6	07020-00900	FITTING, GREASE	4	SN:B10001--

Ref. V0100-01A1 Page 390010

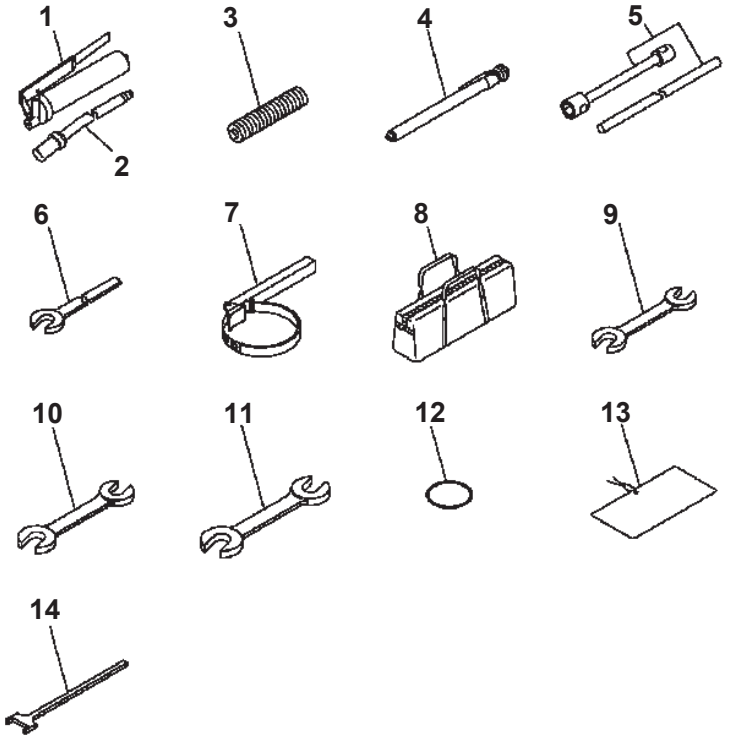

Item	Part No.	Description	Qty	Options
	07952-70004	GREASE PUMP ASS'Y	1	SN:B10001--
1	07950-10450	· PUMP	1	SN:B10001--
2	07951-41017	· NOZZLE	1	SN:B10001--
3	07950-90403	CARTRIDGE	1	SN:B10001--
4	09289-00000	GAUGE {TIRE}	1	SN:B10001--
5	417-98-B1120	WRENCH	1	SN:B10001--
6	09001-03600	WRENCH	1	SN:B10001--
7	09019-08035	WRENCH {FILTER}	1	SN:B10001--
8	09056-04613	BAG {TOOL}	1	SN:B10001--
9	09002-01417	WRENCH¤ 14X17	1	SN:B10001--
10	09002-01922	WRENCH¤ 19X22	1	SN:B10001--
11	09002-03032	WRENCH¤ 30X32	1	SN:B10001--
12	07000-15090	O-RING	1	SN:B10001--
13	09963-03001	TAG	1	SN:B10001--
14	418-98-31110	GAUGE	1	SN:B10001--

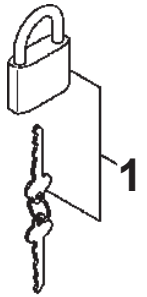

PTE7728

LOCK

Item	Part No.	Description	Qty	Options
1	09460-00004	LOCK	1	SN:B10001--

SERVICE KIT AND COMPONENT PARTS

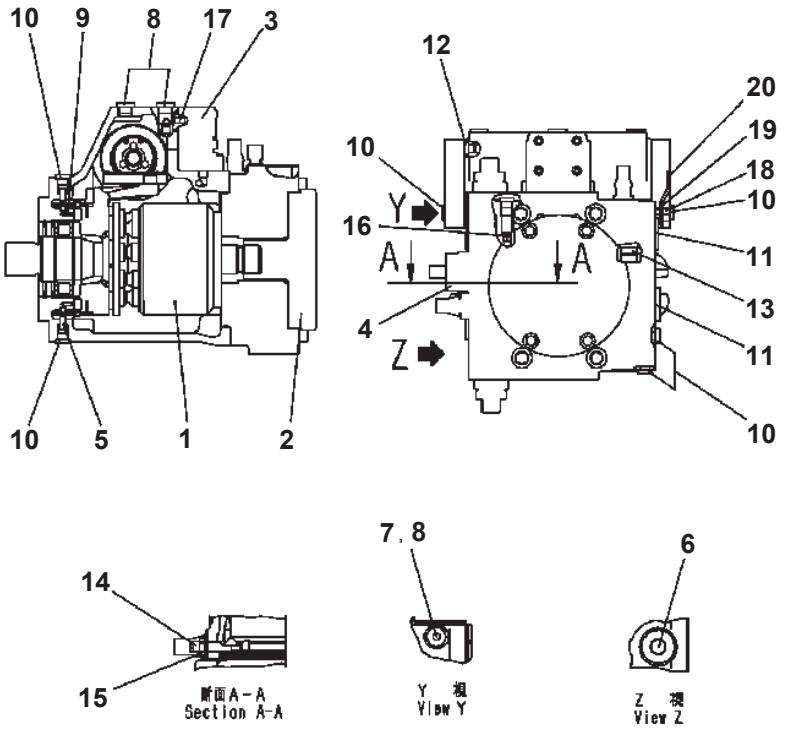

PUMP (1/12)

Item	Part No.	Description	Qty	Options
	419-18-31103	PUMP	1	SN:B10243--
	419-18-31102	PUMP	1	SN:B10001--B10242
1	(★UC40960793991)	· ROTARY GROUP	1	SN:B10001--
2	(★UC40202776061)	· GEAR PUMP ASS'Y	1	SN:B10001--
3	(★UC40204828081)	· VALVE	1	SN:B10001--
4	(★419-18-31440)	· VALVE	1	SN:B10243--
	(★UC47044656081)	· DA CARTRIDGE	1	SN:B10001--B10242
5	UC17043501691	· PIN	2	SN:B10001--
6	UC10260229371	· PLUG	1	SN:B10001--
7	UC10260197021	· PLUG	2	SN:B10001--
8	UC10260229281	· PLUG	3	SN:B10001--
9	UC17015442791	· PIN	2	SN:B10001--
10	UC10260185071	· PLUG	5	SN:B10001--
11	UC10260197111	· PLUG	1	SN:B10001--
12	UC17015336461	· PLUG	2	SN:B10001--
13	UC17015657081	· PLUG	1	SN:B10001--
14	(★UC10203561691)	· SCREW	1	SN:B10001--
15	(★UC17008740561)	· NUT	1	SN:B10001--
16	UC17042670391	· ORIFICE	1	SN:B10001--
17	UC10207787351	· ORIFICE	1	SN:B10001--
18	UC10908305771	· SCREW	1	SN:B10001--
19	UC10907991371	· WASHER	1	SN:B10001--
20	(★UC10260239031)	· CLAMP	1	SN:B10001--

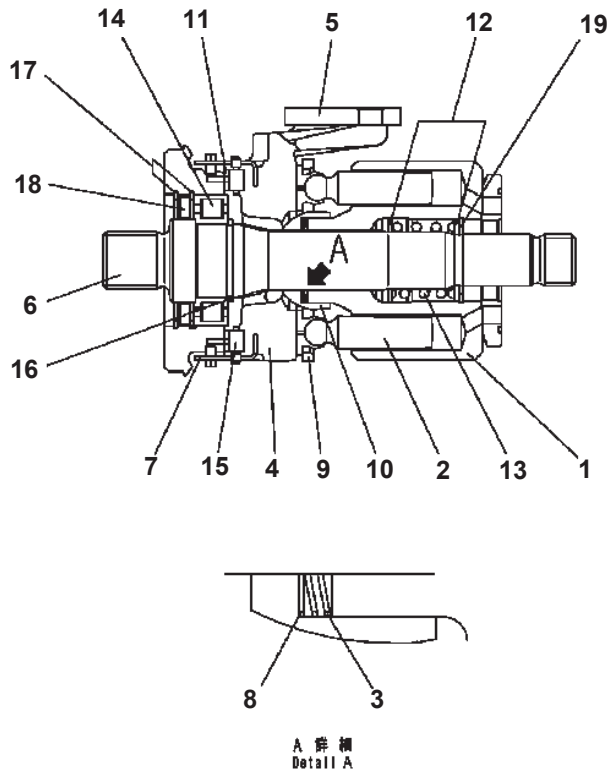

PUMP (2/12)

Item	Part No.	Description	Qty	Options
	(419-18-31103)	PUMP	1	SN:B10243--
	(419-18-31102)	PUMP	1	SN:B10001--B10242
	(★UC40960793991)	· ROTARY GROUP	1	SN:B10001--
1	(★UC10204055651)	· · CYLINDER BLOCK	1	SN:B10001--
2	(★UC40207682941)	· · PISTON	9	SN:B10001--
3	UC10992172031	· · SPRING	1	SN:B10001--
4	UC17044512261	· · CRADLE	1	SN:B10001--
5	UC17044903491	· · RING {SLIDE}	1	SN:B10001--
6	UC17092170761	· · SHAFT	1	SN:B10001--
7	UC17042141821	· · WIRE	2	SN:B10001--
8	(★UC17043250531)	· · SHIM	1	SN:B10001--
	(★UC17043250621)	· · SHIM	1	SN:B10001--
	(★UC17043250711)	· · SHIM	1	SN:B10001--
	(★UC17043250891)	· · SHIM	1	SN:B10001--
9	(★UC10992171931)	· · PLATE {RETAINING}	1	SN:B10001--
10	(★UC10943226491)	· · BALL {RETAINING}	1	SN:B10001--
11	UC10206659411	· · BEARING {LINER}	1	SN:B10001--
12	UC10992171751	· · WASHER	2	SN:B10001--
13	UC17043546571	· · SPRING {PRESSURE}	1	SN:B10001--
14	UC17015626991	· · BEARING {ROLLER}	1	SN:B10001--
15	UC17083057871	· · BEARING ASS'Y	1	SN:B10001--
16	UC17008441651	· · RING {RETAINING}	1	SN:B10001--
17	UC10260000291	· · RING {RETAINING}	2	SN:B10001--
18	UC17083098081	· · SEAL RING {SHAFT}	1	SN:B10001--
19	UC17008340581	· · RING {RETAINING}	1	SN:B10001--

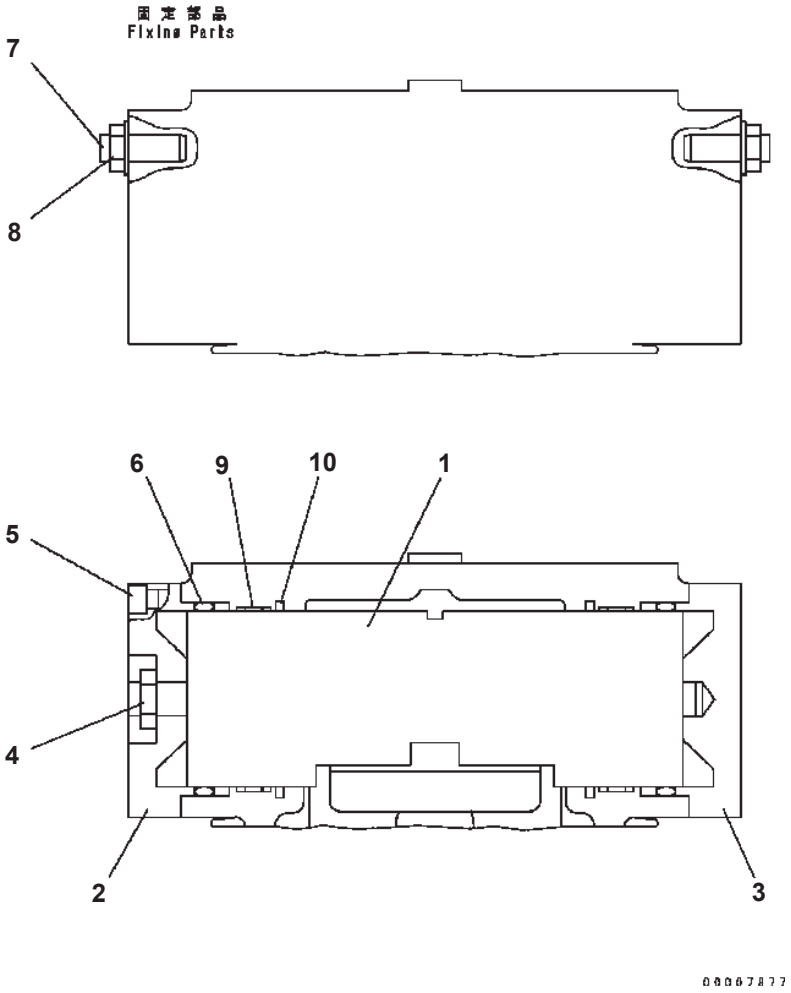

Item	Part No.	Description	Qty	Options
	(419-18-31103)	PUMP	1	SN:B10243--
	(419-18-31102)	PUMP	1	SN:B10001--B10242
1	(★UC40202559541)	· PISTON	1	SN:B10001--
2	(★UC10201074541)	· COVER	1	SN:B10001--
3	UC10201074631	· COVER	1	SN:B10001--
4	(★UC17015747751)	· NUT	1	SN:B10001--
5	UC17008303861	· SOCKET {SCREW}	8	SN:B10001--
6	UC10908536081	· O-RING	2	SN:B10001--
7	UC10943279011	· PIN {THREADED}	2	SN:B10001--
8	UC17015245961	· NUT {SEAL}	2	SN:B10001--
9	UC10260083991	· RING {GUIDE}	2	SN:B10001--
10	UC10260027221	· RING	2	SN:B10001--

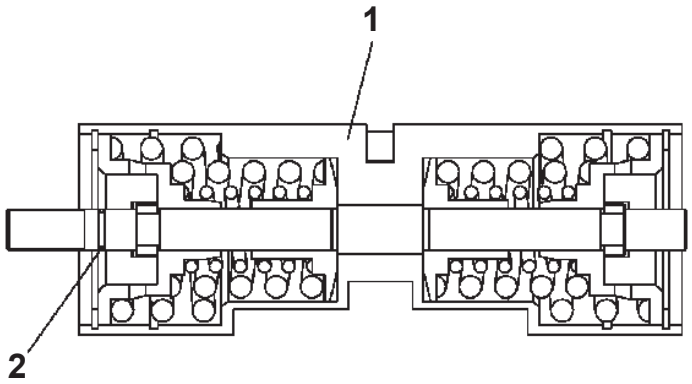

PUMP (4/12)

Item	Part No.	Description	Qty	Options
	(419-18-31103)	PUMP	1	SN:B10243--
	(419-18-31102)	PUMP	1	SN:B10001--B10242
1	(★UC40202559541)	· PISTON	1	SN:B10001--
2	UC17008633311	· · O-RING	1	SN:B10001--

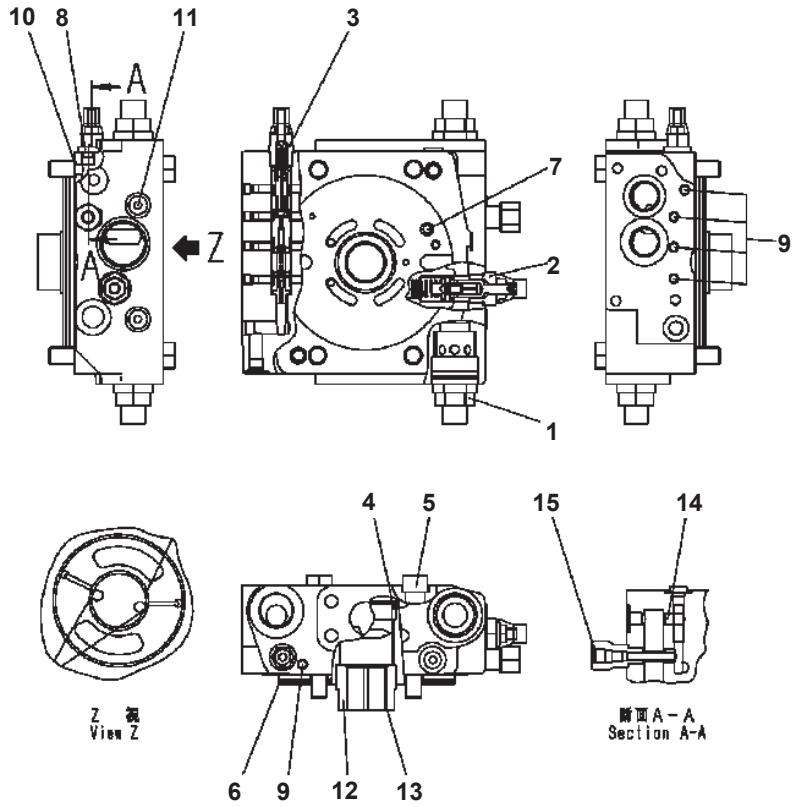

Item	Part No.	Description	Qty	Options
	(419-18-31103)	PUMP	1	SN:B10243--
	(419-18-31102)	PUMP	1	SN:B10001--B10242
1	UC47260187961	・ VALVE ASS'Y	2	SN:B10001--
	☆	・・ SEAL KIT	1	SN:B10001--
	UC10915789591	・・ CAP	1	SN:B10001--
2	(★UC47043485671)	・ RELIEF VALVE {PRESSURE}	1	SN:B10001--
3	(★UC47043383491)	・ VALVE {PRESSURE}	1	SN:B10001--
4	(★UC17044906341)	・ BUSHING {BEARING}	1	SN:B10001--
5	UC10908314511	・ SOCKET {SOCKET}	4	SN:B10001--
6	UC10983021711	・ O-RING	1	SN:B10001--
7	(★UC10983132091)	・ PIN	1	SN:B10001--
8	UC17015169261	・ SCREW {LOCKING}	1	SN:B10001--
9	(★UC10983131991)	・ PIN	3	SN:B10001--
10	UC17008633311	・ O-RING	2	SN:B10001--
11	UC10260185071	・ PLUG {LOCKING}	2	SN:B10001--
12	UC10943277451	・ BUSH (B1)	1	SN:B10001--
13	UC17043277381	・ BUSHING {BEARING} (B1)	1	SN:B10001--
14	UC10908349821	・ PIN {THREADED}	1	SN:B10001--
15	(UC40207115821)	・ INSERT	1	SN:B10001--

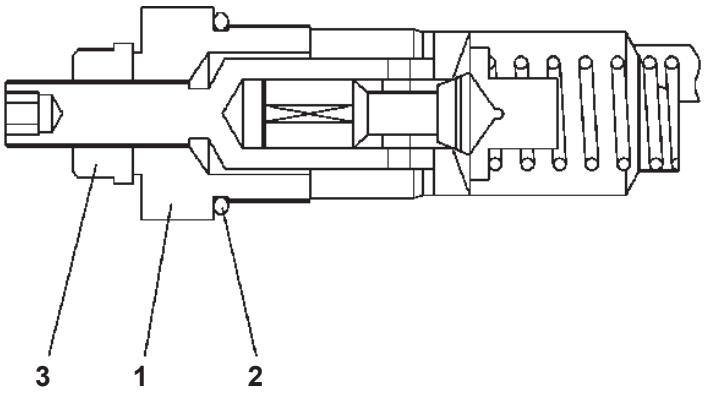

00007880

Item	Part No.	Description	Qty	Options
	(419-18-31103)	PUMP	1	SN:B10243--
	(419-18-31102)	PUMP	1	SN:B10001--B10242
1	UC47043485671	· RELIEF VALVE	1	SN:B10001--
2	UC17008376171	· · O-RING	1	SN:B10001--
3	UC17015327171	· · NUT {LOCK}	1	SN:B10001--

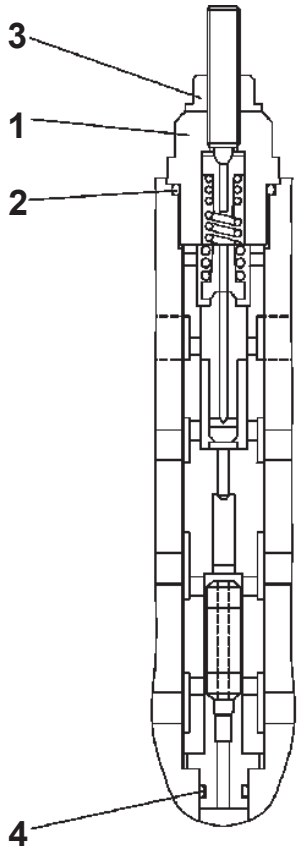

00007881

PUMP (7/12)

Item	Part No.	Description	Qty	Options
	(419-18-31103)	PUMP	1	SN:B10243--
	(419-18-31102)	PUMP	1	SN:B10001--B10242
1	(★UC47043383491)	・VALVE	1	SN:B10001--
2	UC17008375791	・・O-RING	1	SN:B10001--
3	(★UC17015270721)	・・NUT {LOCK}	1	SN:B10001--
4	UC10908638071	・・O-RING	1	SN:B10001--

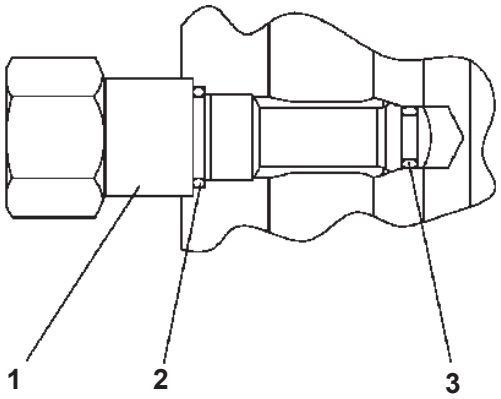

00009140

PUMP (8/12)

Item	Part No.	Description	Qty	Options
	(419-18-31103)	PUMP	1	SN:B10243--
	(419-18-31102)	PUMP	1	SN:B10001--B10242
1	UC40207115821	· INSERT	1	SN:B10001--
2	UC17008375251	· · O-RING	1	SN:B10001--
3	UC17008570971	· · O-RING	1	SN:B10001--

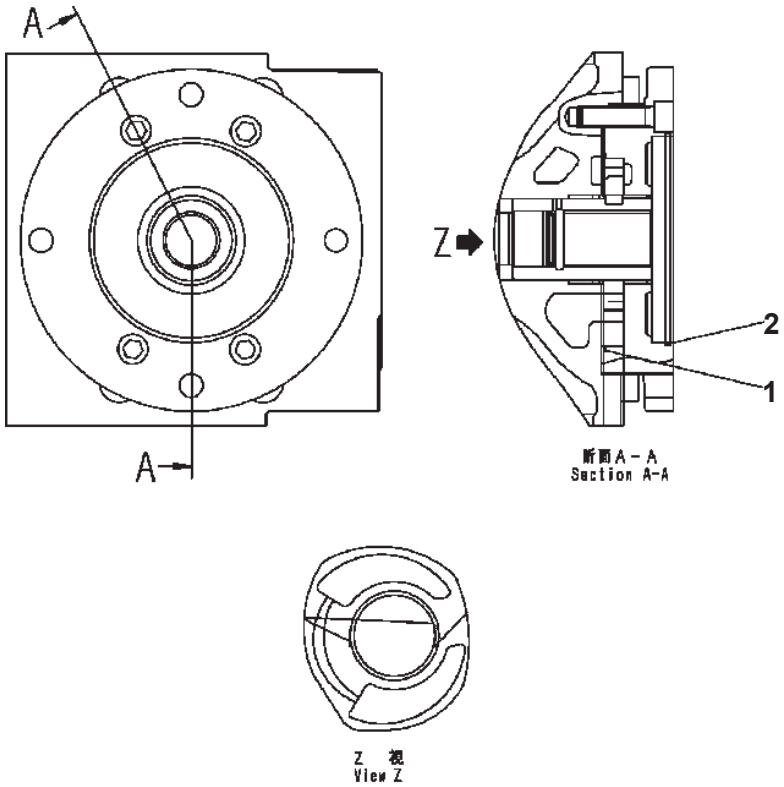

PUMP (9/12)

Item	Part No.	Description	Qty	Options
	(419-18-31103)	PUMP	1	SN:B10243--
	(419-18-31102)	PUMP	1	SN:B10001--B10242
1	UC10915788121	・O-RING	1	SN:B10001--
2	UC17008536461	・O-RING	1	SN:B10001--

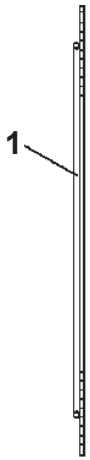

00009142

PUMP (10/12)

Item	Part No.	Description	Qty	Options
	(419-18-31103)	PUMP	1	SN:B10243--
	(419-18-31102)	PUMP	1	SN:B10001--B10242
1	UC10915788121	· O-RING	1	SN:B10001--

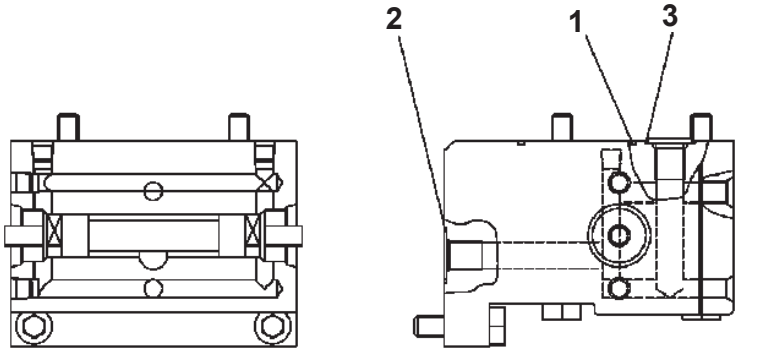

PUMP (11/12)

Item	Part No.	Description	Qty	Options
	(419-18-31103)	PUMP	1	SN:B10243--
	(419-18-31102)	PUMP	1	SN:B10001--B10242
1	UC10260064121	· O-RING	1	SN:B10001--
2	UC10908633291	· O-RING	3	SN:B10001--
3	UC17008570971	· O-RING	1	SN:B10001--

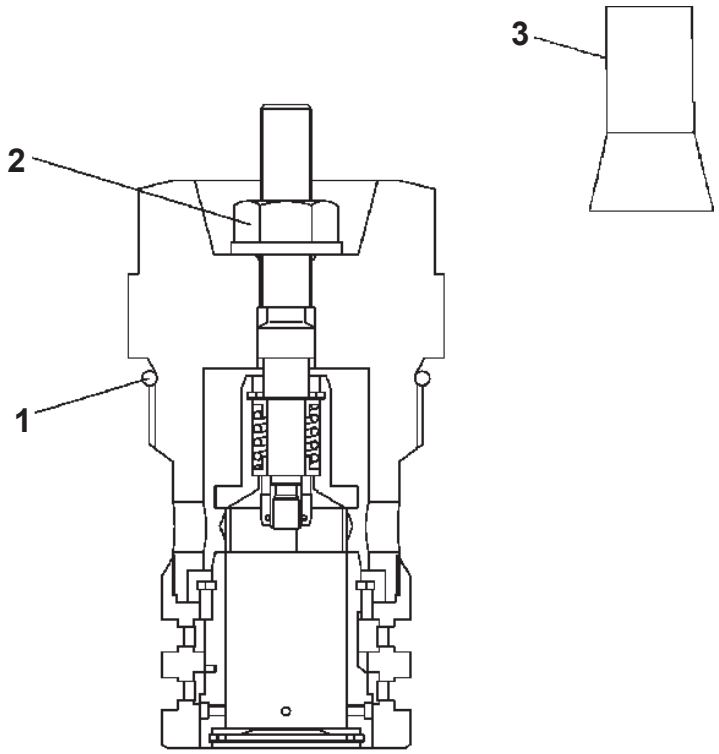

Item	Part No.	Description	Qty	Options
	(419-18-31103)	PUMP	1	SN:B10243--
	(419-18-31102)	PUMP	1	SN:B10001--B10242
1	UC17008554591	· O-RING	1	SN:B10001--
2	(☆UC17015270721)	· NUT	1	SN:B10001--
3	419-18-31450	· CAP	1	SN:B10243--

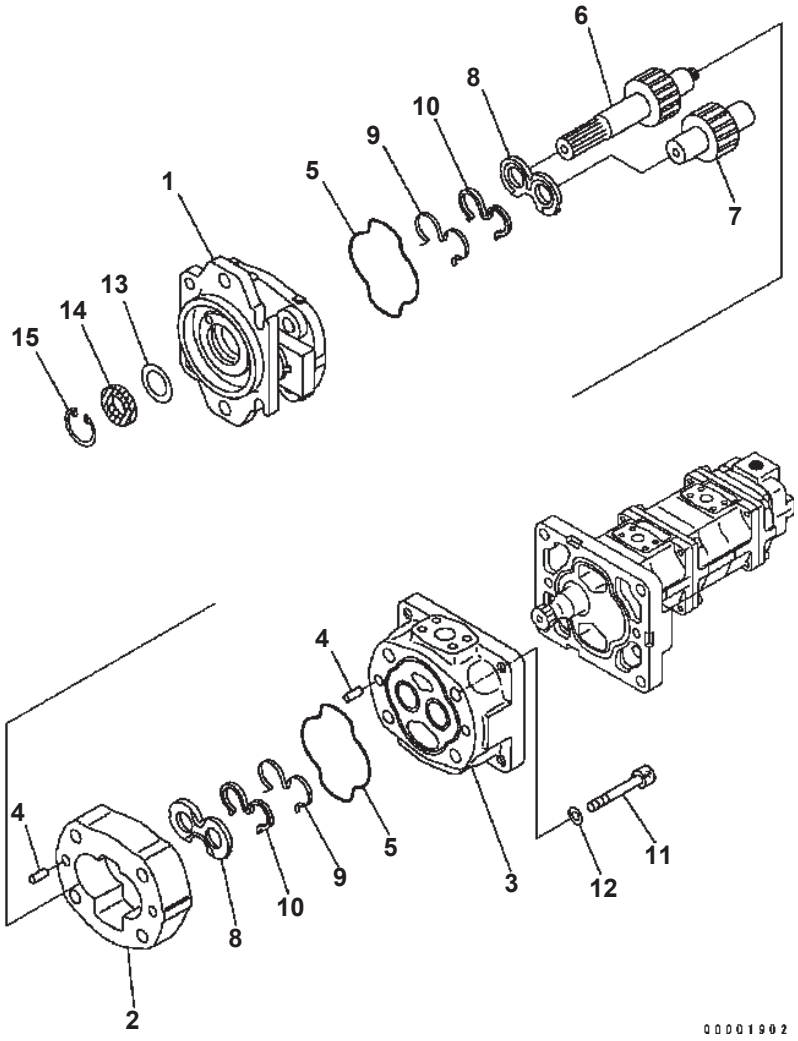

TORQUE CONVERTER AND P.P.C. PUMP (INNER PARTS) (1/4)

Item	Part No.	Description	Qty	Options
	(705-56-36051)	PUMP ASS'Y (SAR90+32+SB18+12)	1	SN:B10211--
	□(705-56-36050)	PUMP ASS'Y (SAR90+32+SB18+12) THIS ASSEMBLY CONSISTS OF ALL PARTS SHOWN IN FIGS.Y1610-31A0 TO Y1610-34A0.	1	SN:B10001--B10210
	705-38-39000	· PUMP ASS'Y (SAR90)	1	SN:B10001--
1	(★705-18-03620)	· · BRACKET ASS'Y	1	SN:B10001--
	(★705-17-03350)	· · · BUSHING {PLANE}	2	SN:B10001--
2	(★705-17-39010)	· · CASE {GEAR}	1	SN:B10001--
3	(★705-18-03240)	· · CARRIER	1	SN:B10001--
	(★705-17-03350)	· · · BUSHING {PLANE}	2	SN:B10001--
4	(★04020-01228)	· · PIN {DOWEL}	4	SN:B10001--
5	(★705-17-03381)	· · O-RING	2	SN:B10001--
6	(★705-19-39130)	· · GEAR {DRIVE}	1	SN:B10001--
7	(★705-17-39810)	· · GEAR {DRIVEN}	1	SN:B10001--
8	(★705-17-03610)	· · PLATE {SIDE}	2	SN:B10001--
9	(★705-17-03443)	· · RING {BACK-UP}	2	SN:B10001--
10	(★705-17-03473)	· · SEAL {SEAL}	2	SN:B10001--
11	(★01253-61635)	· · BOLT	4	SN:B10001--
12	(★01643-51645)	· · WASHER	4	SN:B10001--
13	705-17-03870	· · PLATE	1	SN:B10001--
14	705-17-03811	· · SEAL {OIL}	1	SN:B10001--
15	04065-05220	· · RING {SNAP}	1	SN:B10001--

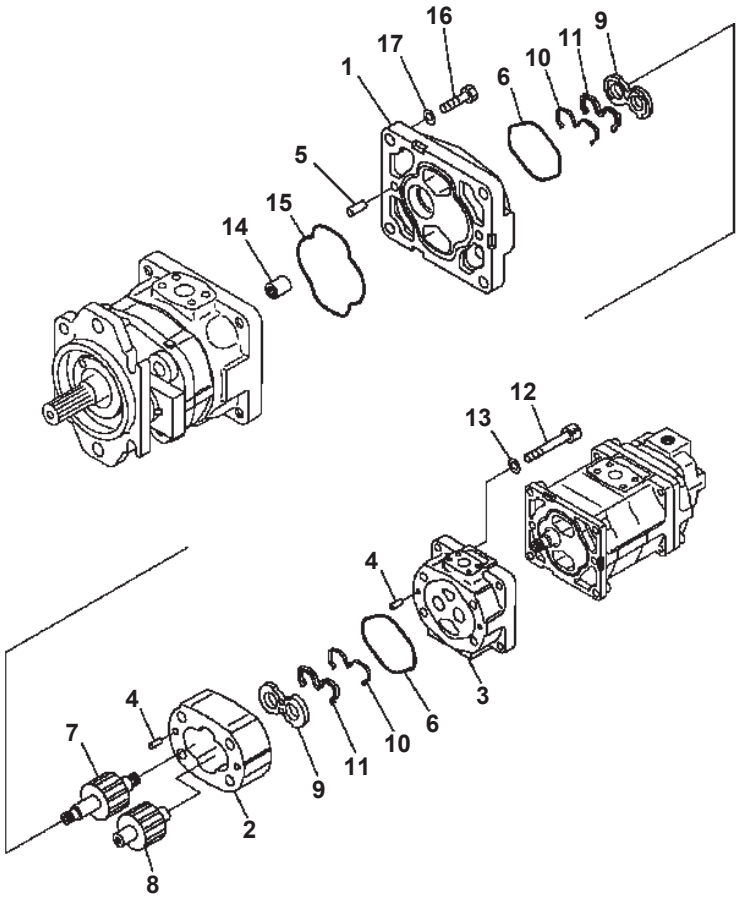

TORQUE CONVERTER AND P.P.C. PUMP (INNER PARTS) (2/4)

Item	Part No.	Description	Qty	Options
	(705-56-36051)	PUMP ASS'Y (SAR90+32+SB18+12)	1	SN:B10211--
	□(705-56-36050)	PUMP ASS'Y (SAR90+32+SB18+12) THIS ASSEMBLY CONSISTS OF ALL PARTS SHOWN IN FIGS.Y1610-31A0 TO Y1610-34A0.	1	SN:B10001--B10210
	705-38-30060	· PUMP ASS'Y (SAR32)	1	SN:B10001--
1	(★705-19-02551)	· · BRACKET	1	SN:B10001--
	(★705-17-02353)	· · · BUSHING {PLANE}	2	SN:B10001--
2	(★705-17-30012)	· · CASE {GEAR}	1	SN:B10001--
3	(★705-17-02221)	· · CARRIER ASS'Y	1	SN:B10001--
	(★705-17-02353)	· · · BUSHING {PLANE}	2	SN:B10001--
4	(★04020-01024)	· · PIN {DOWEL}	4	SN:B10001--
5	(★04020-01228)	· · PIN {DOWEL}	2	SN:B10001--
6	(★705-17-02360)	· · O-RING	2	SN:B10001--
7	(★705-19-30760)	· · GEAR {DRIVE}	1	SN:B10001--
8	(★705-17-30512)	· · GEAR {DRIVEN}	1	SN:B10001--
9	(★705-17-02612)	· · PLATE {SIDE}	2	SN:B10001--
10	(★705-17-02430)	· · RING {BACK-UP}	2	SN:B10001--
11	(★705-17-02460)	· · RING {RING}	2	SN:B10001--
12	(★01253-61200)	· · BOLT	4	SN:B10001--
13	(★01643-51232)	· · WASHER	4	SN:B10001--
14	705-17-02330	· COUPLING ASS'Y	1	SN:B10001--
15	705-17-03381	· O-RING	1	SN:B10001--
16	01252-61450	· BOLT	4	SN:B10001--
17	705-17-04980	· WASHER	4	SN:B10001--

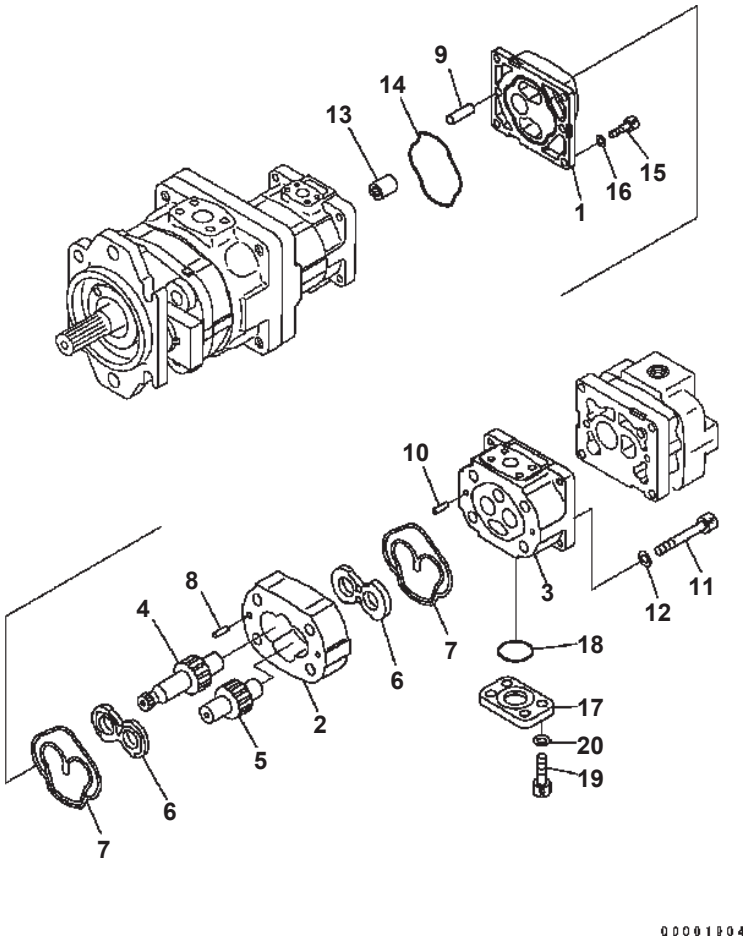

TORQUE CONVERTER AND P.P.C. PUMP (INNER PARTS) (3/4)

Item	Part No.	Description	Qty	Options
	(705-56-36051)	PUMP ASS'Y (SAR90+32+SB18+12)	1	SN:B10211--
	□(705-56-36050)	PUMP ASS'Y (SAR90+32+SB18+12) THIS ASSEMBLY CONSISTS OF ALL PARTS SHOWN IN FIGS.Y1610-31A0 TO Y1610-34A0.	1	SN:B10001--B10210
	705-41-04460	· PUMP ASS'Y (SB18)	1	SN:B10001--
1	(★705-41-83030)	· · BRACKET	1	SN:B10001--
	(★705-40-80610)	· · · BUSHING {PLANE}	1	SN:B10001--
	(★705-40-80620)	· · · BUSHING {PLANE}	1	SN:B10001--
2	(★705-40-30011)	· · CASE {GEAR}	1	SN:B10001--
3	(★705-40-80331)	· · CARRIER	1	SN:B10001--
	(★705-40-80610)	· · · BUSHING {PLANE}	1	SN:B10001--
	(★705-40-80620)	· · · BUSHING {PLANE}	1	SN:B10001--
4	(★705-40-30640)	· · GEAR {DRIVE}	1	SN:B10001--
5	(★705-40-30510)	· · GEAR {DRIVEN}	1	SN:B10001--
6	(★705-40-83720)	· · PLATE {SIDE}	2	SN:B10001--
7	(★705-40-80770)	· · SEAL {OIL}	2	SN:B10001--
8	(★04020-00820)	· · PIN {DOWEL}	4	SN:B10001--
9	(★04020-01024)	· · PIN {DOWEL}	2	SN:B10001--
10	(★705-67-01230)	· · PIN {DOWEL}	2	SN:B10001--
11	(★01252-61280)	· · BOLT	4	SN:B10001--
12	(★01643-51232)	· · WASHER	4	SN:B10001--
13	705-67-01330	· COUPLING ASS'Y	1	SN:B10001--
14	705-17-02360	· O-RING	1	SN:B10001--
15	01252-61035	· BOLT	4	SN:B10001--
16	01643-51032	· WASHER	4	SN:B10001--
17	705-17-01880	· PLATE	1	SN:B10001--
18	07000-E3032	· O-RING	1	SN:B10001--
19	01010-81025	· BOLT	4	SN:B10001--
20	01643-51032	· WASHER	4	SN:B10001--

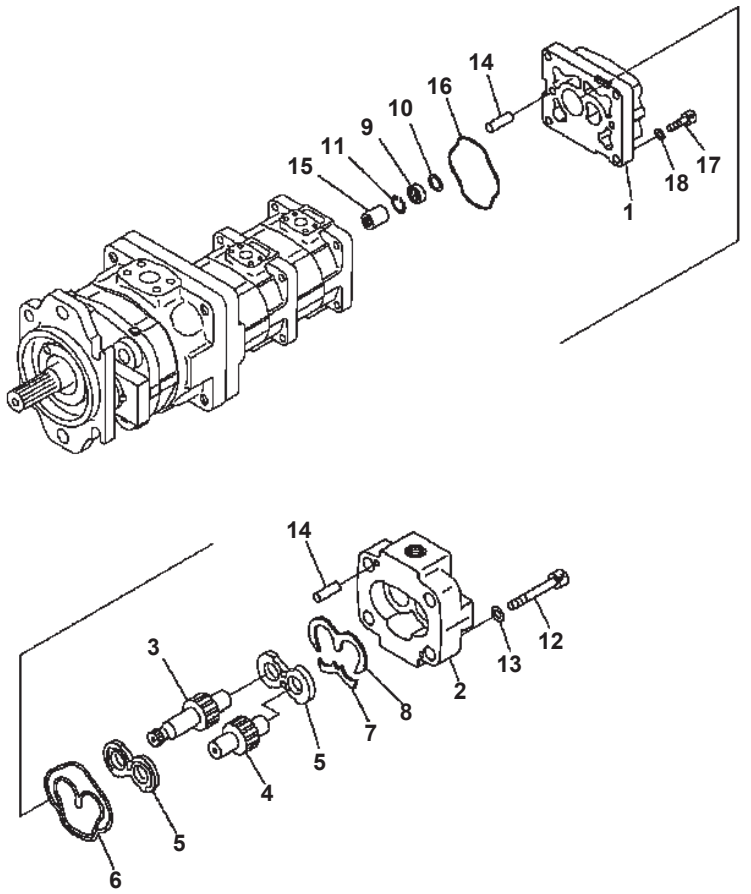

TORQUE CONVERTER AND P.P.C. PUMP (INNER PARTS) (4/4)

Item	Part No.	Description	Qty	Options
	(705-56-36051)	PUMP ASS'Y (SAR90+32+SB18+12)	1	SN:B10211--
	□(705-56-36050)	PUMP ASS'Y (SAR90+32+SB18+12) THIS ASSEMBLY CONSISTS OF ALL PARTS SHOWN IN FIGS.Y1610-31A0 TO Y1610-34A0.	1	SN:B10001--B10210
	705-41-05690	· PUMP ASS'Y (SBR12)	1	SN:B10001--
1	(★705-41-83510)	· · BRACKET	1	SN:B10001--
	(★705-40-83630)	· · · BUSHING {PLANE (DRIVE SIDE)}	1	SN:B10001--
	(★705-40-83640)	· · · BUSHING {PLANE (DRIVEN SIDE)}	1	SN:B10001--
2	(★705-40-24E70)	· · COVER	1	SN:B10001--
	(★705-40-83640)	· · · BUSHING {PLANE (DRIVE SIDE)}	1	SN:B10001--
	(★705-40-83630)	· · · BUSHING {PLANE (DRIVEN SIDE)}	1	SN:B10001--
3	(★705-40-24L50)	· · GEAR {DRIVE}	1	SN:B10001--
4	(★705-40-24H10)	· · GEAR {DRIVEN}	1	SN:B10001--
5	(★705-40-83720)	· · PLATE {SIDE}	2	SN:B10001--
6	(★705-40-80770)	· · SEAL {RING}	1	SN:B10001--
7	(★705-40-80880)	· · PLATE	1	SN:B10001--
8	(★705-40-83760)	· · SEAL	1	SN:B10001--
9	705-40-81820	· · SEAL {OIL}	1	SN:B10001--
10	705-40-81870	· · PLATE	1	SN:B10001--
11	04065-03012	· · RING {SNAP}	1	SN:B10001--
12	01252-71055	· · BOLT	4	SN:B10001--
13	01643-51032	· · WASHER	4	SN:B10001--
14	04020-00514	· · PIN {DOWEL}	4	SN:B10001--
15	705-67-01330	· COUPLING ASS'Y	1	SN:B10001--
16	705-40-80670	· SEAL	1	SN:B10001--
17	01252-60830	· BOLT	4	SN:B10001--
18	01643-50823	· WASHER	4	SN:B10001--

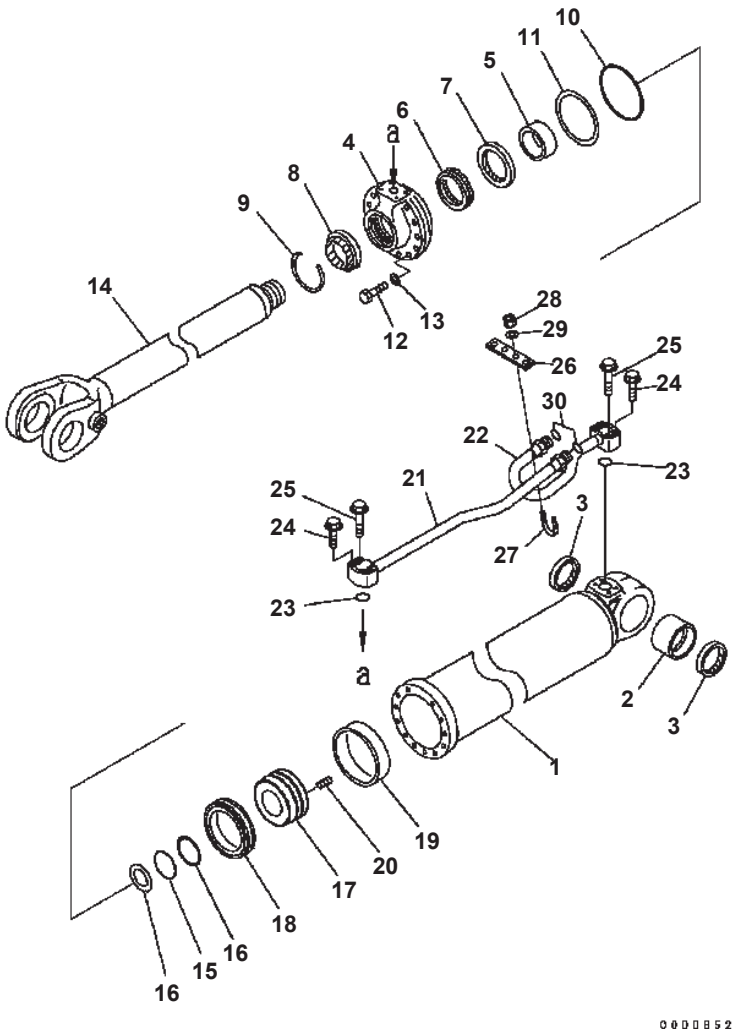

LIFT CYLINDER (INNER PARTS)

Item	Part No.	Description	Qty	Options
G1	(⊙707-01-XF060)	CYLINDER GROUP {LIFT¤ L.H.}	1	SN:B10001--
	(⊙707-01-XU360)	CYLINDER GROUP {LIFT¤ L.H. (FINAL COATING)}	1	SN:B10001--
	(⊙707-01-XF070)	CYLINDER GROUP {LIFT¤ R.H.}	1	SN:B10001--
	(⊙707-01-XU370)	CYLINDER GROUP {LIFT¤ R.H. (FINAL COATING)}	1	SN:B10001--
		==========		
	707-01-0F060	CYLINDER ASS'Y	1	SN:B10001--
1	707-13-14690	· CYLINDER	1	SN:B10001--
2	707-76-85010	· BUSHING	1	SN:B10001--
3	424-09-12320	· SEAL {DUST} (KIT)	2	SN:B10001--
4	707-27-14860	· HEAD {CYLINDER}	1	SN:B10001--
5	707-52-90520	· BUSHING	1	SN:B10001--
6	707-51-75030	· PACKING {ROD} (KIT)	1	SN:B10001--
7	707-51-75640	· RING {BUFFER}	1	SN:B10001--
8	144-63-94170	· SEAL {DUST} (KIT)	1	SN:B10001--
9	07179-13089	· RING {SNAP}	1	SN:B10001--
10	07000-12135	· O-RING (KIT)	1	SN:B10001--
11	07146-02136	· RING {BACK-UP} (KIT)	1	SN:B10001--
12	01010-81455	· BOLT	12	SN:B10001--
13	01643-31445	· WASHER	12	SN:B10001--
14	707-59-75050	· ROD {PISTON}	1	SN:B10001--
15	07000-15075	· O-RING (KIT)	1	SN:B10001--
16	707-35-90810	· RING {BACK-UP} (KIT)	2	SN:B10001--
17	707-36-14040	· PISTON	1	SN:B10001--
18	707-44-14180	· RING {PISTON} (KIT)	1	SN:B10001--
19	07156-01417	· RING {WEAR} (KIT)	1	SN:B10001--
20	01310-01216	· SCREW	1	SN:B10001--
21	707-86-66840	TUBE {L.H.}	1	SN:B10001--
	707-86-66860	TUBE {R.H.}	1	SN:B10001--
22	707-86-66850	TUBE {L.H.}	1	SN:B10001--
	707-86-66870	TUBE {R.H.}	1	SN:B10001--
23	07000-13030	O-RING (KIT)	2	SN:B10001--
24	01435-01040	BOLT	4	SN:B10001--
25	01435-01055	BOLT	4	SN:B10001--
26	707-88-02750	PLATE	1	SN:B10001--
27	07283-32738	CLIP	2	SN:B10001--
28	01597-01009	NUT	4	SN:B10001--
29	01643-31032	WASHER	4	SN:B10001--
30	02896-11018	O-RING (KIT)	2	SN:B10001--

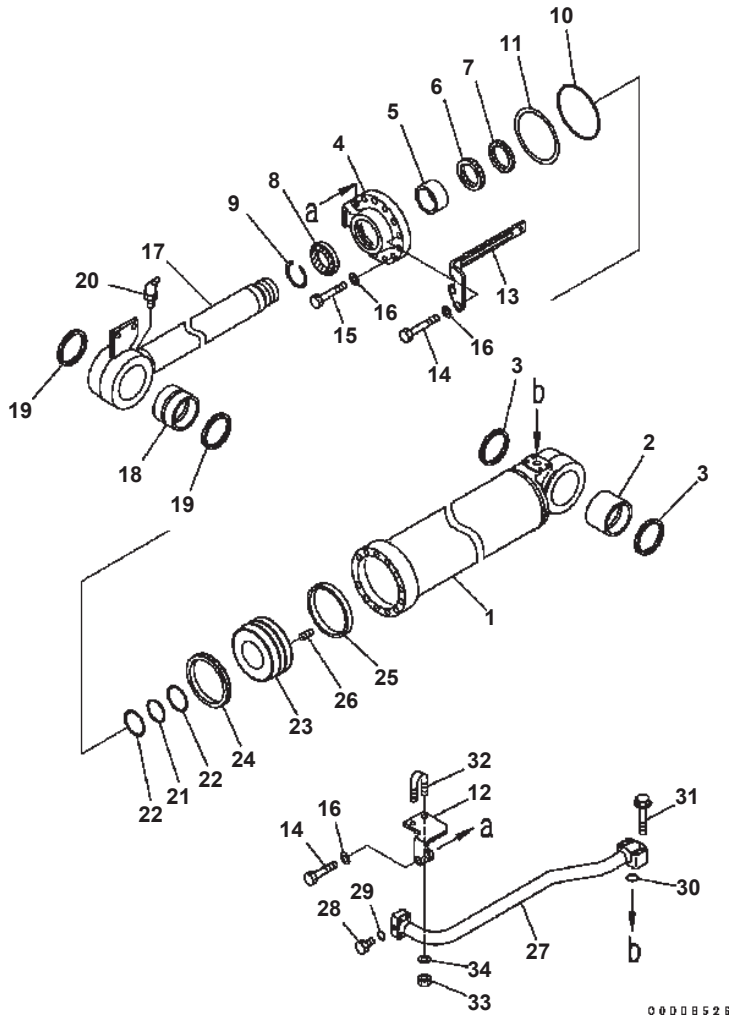

BUCKET CYLINDER (INNER PARTS)

Item	Part No.	Description	Qty	Options
G1	(⊙707-01-XU380)	CYLINDER GROUP {DUMP (FINAL COATING)}	1	SN:B10001--
		==========		
	707-01-0F080	CYLINDER ASS'Y	1	SN:B10001--
1	707-13-16830	· CYLINDER	1	SN:B10001--
2	707-76-95040	· BUSHING	1	SN:B10001--
3	421-09-11310	· SEAL {DUST} (KIT)	2	SN:B10001--
4	707-27-16860	· HEAD {CYLINDER}	1	SN:B10001--
5	707-52-90560	· BUSHING	1	SN:B10001--
6	707-51-80030	· PACKING {ROD} (KIT)	1	SN:B10001--
7	707-51-80640	· RING {BUFFER} (KIT)	1	SN:B10001--
8	195-63-92190	· SEAL {DUST} (KIT)	1	SN:B10001--
9	07179-13094	· RING {SNAP}	1	SN:B10001--
10	07000-15150	· O-RING (KIT)	1	SN:B10001--
11	07146-05152	· RING {BACK-UP} (KIT)	1	SN:B10001--
12	707-88-02770	· PLATE	1	SN:B10001--
13	707-88-02760	· PLATE	1	SN:B10001--
14	01010-81665	· BOLT	4	SN:B10001--
15	01010-81660	· BOLT	8	SN:B10001--
16	01643-31645	· WASHER	12	SN:B10001--
17	707-58-80690	· ROD {PISTON}	1	SN:B10001--
18	707-76-95050	· BUSHING	1	SN:B10001--
19	421-09-11310	· SEAL {DUST} (KIT)	2	SN:B10001--
20	419-09-11250	· FITTING {GREASE}	1	SN:B10001--
21	07000-15080	· O-RING (KIT)	1	SN:B10001--
22	707-35-90820	· RING {BACK-UP} (KIT)	2	SN:B10001--
23	707-36-16640	· PISTON	1	SN:B10001--
24	707-44-16180	· RING {PISTON} (KIT)	1	SN:B10001--
25	07156-01620	· RING {WEAR} (KIT)	1	SN:B10001--
26	01310-01216	· SCREW	6	SN:B10001--
27	707-86-12310	TUBE	1	SN:B10001--
28	07040-11007	PLUG	1	SN:B10001--
29	07002-11023	O-RING (KIT)	1	SN:B10001--
30	07000-13035	O-RING (KIT)	1	SN:B10001--
31	01435-01055	BOLT	4	SN:B10001--
32	07283-33442	CLIP	1	SN:B10001--
33	01597-01009	NUT	2	SN:B10001--
34	01643-31032	WASHER	2	SN:B10001--
		==========		
		SERVICE KIT		

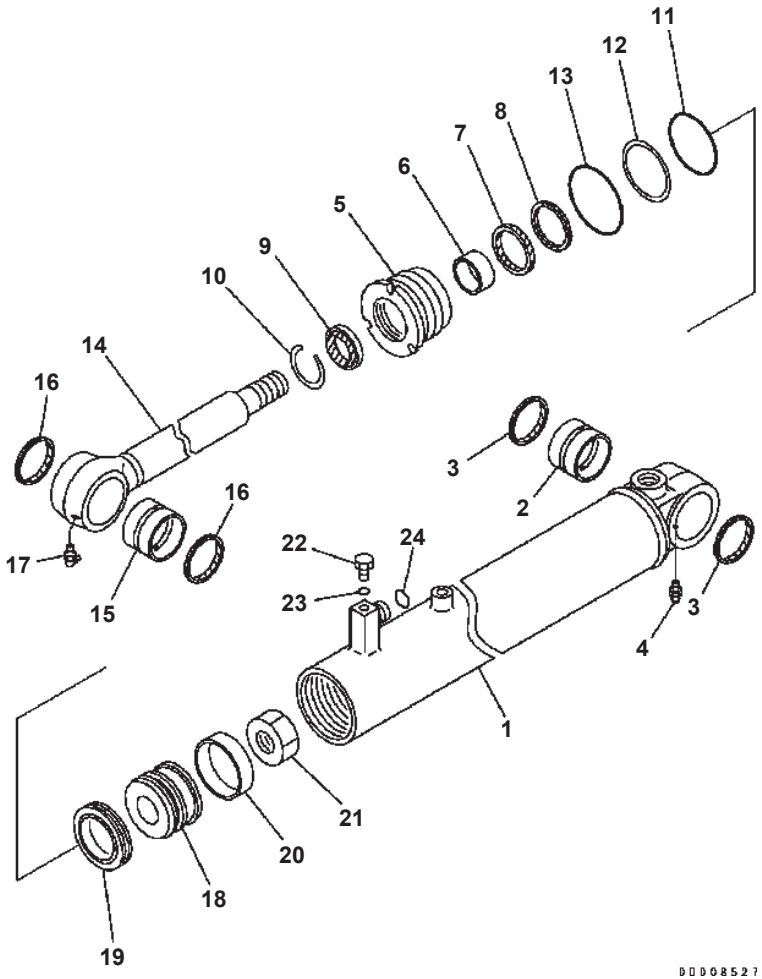

STEERING CYLINDER (INNER PARTS)

Item	Part No.	Description	Qty	Options
	707-00-0Z680	CYLINDER ASS'Y	2	SN:B10001--
1	707-11-70100	· CYLINDER	1	SN:B10001--
2	707-76-40020	· BUSHING	1	SN:B10001--
3	419-09-11120	· SEAL {DUST} (KIT)	2	SN:B10001--
4	07020-00000	· FITTING {GREASE}	1	SN:B10001--
5	707-29-70620	· HEAD {CYLINDER}	1	SN:B10001--
6	707-52-90150	· BUSHING	1	SN:B10001--
7	707-51-40030	· PACKING {ROD} (KIT)	1	SN:B10001--
8	707-51-40640	· RING {BUFFER} (KIT)	1	SN:B10001--
9	198-63-75190	· SEAL {DUST} (KIT)	1	SN:B10001--
10	07179-12052	· RING {SNAP}	1	SN:B10001--
11	07000-12065	· O-RING (KIT)	1	SN:B10001--
12	07146-02066	· RING {BACK-UP} (KIT)	1	SN:B10001--
13	07000-12070	· O-RING (KIT)	1	SN:B10001--
14	707-58-40A60	· ROD	1	SN:B10001--
15	707-76-40020	· BUSHING	1	SN:B10001--
16	419-09-11120	· SEAL {DUST} (KIT)	2	SN:B10001--
17	07020-00675	· FITTING {GREASE}	1	SN:B10001--
18	707-36-70270	· PISTON	1	SN:B10001--
19	707-44-70110	· RING {PISTON} (KIT)	1	SN:B10001--
20	07156-00710	· RING {WEAR} (KIT)	1	SN:B10001--
21	707-67-30030	· NUT	1	SN:B10001--
22	07040-11007	· PLUG	1	SN:B10001--
23	07002-11023	· O-RING (KIT)	1	SN:B10001--
24	02896-11012	· O-RING (KIT)	1	SN:B10001--
		SERVICE KIT		
K	707-99-14770	SERVICE KIT {STEERING CYLINDER}	2	SN:B10001--

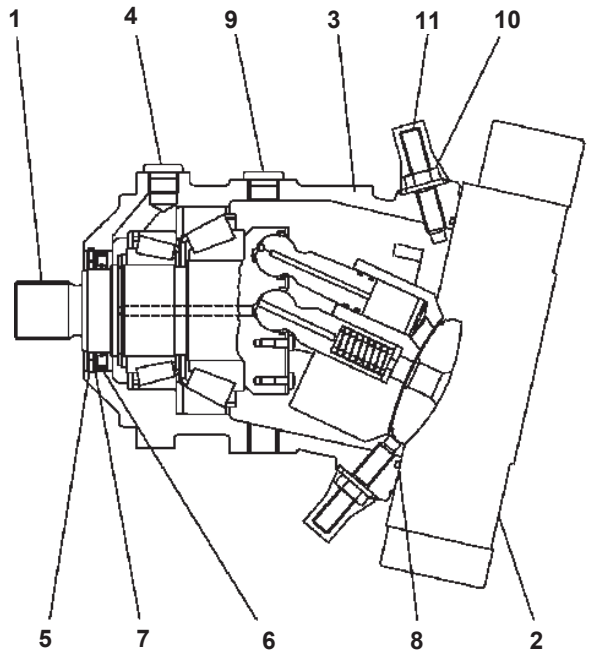

00002773

MOTOR (1/6) (#B10001-B10348)

Item	Part No.	Description	Qty	Options
	419-18-31201	MOTOR THIS ASSEMBLY CONSISTS OF ALL PARTS SHOWN IN FIGS.Y1651-01A0 TO Y1651-06A0.	1	SN:B10001--
1	(UC4020725866)	· ROTARY GROUP	1	SN:B10001--
2	(UC4020725967)	· CONTROL	1	SN:B10001--
3	UC1100701488	· HOUSING	1	SN:B10001--
4	UC4100105483	· PLUG ASS'Y	1	SN:B10001--
5	UC1700834159	· WASHER	1	SN:B10001--
6	UC1708316622	· OIL SEAL	1	SN:B10001--
7	UC1700870191	· SHIM	1	SN:B10001--
8	UC1090877815	· O-RING	1	SN:B10001--
9	UC4100105483	· PLUG ASS'Y	1	SN:B10001--
10	UC4704468625	· SCREW	2	SN:B10001--
11	UC1701524596	· NUT	2	SN:B10001--

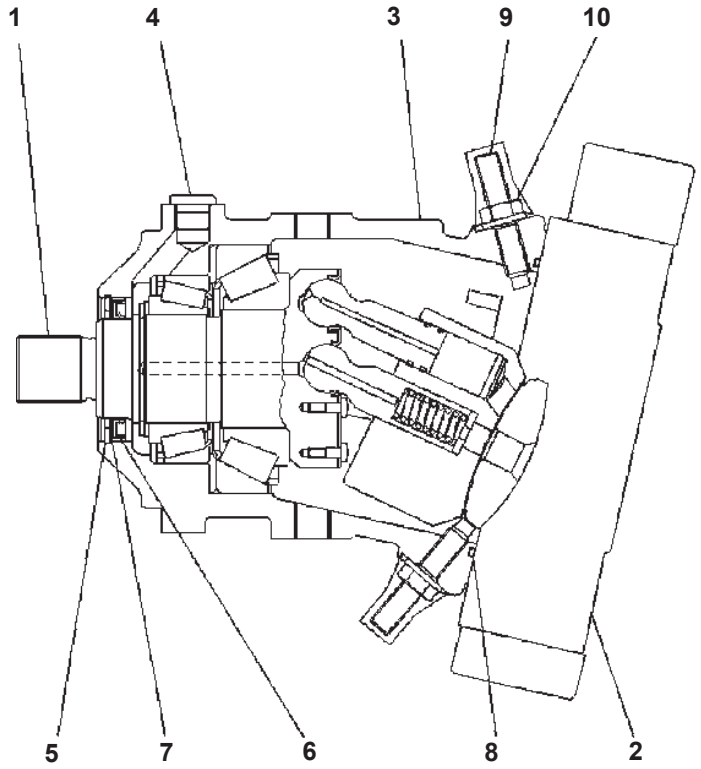

MOTOR (1/6) (#B10349-)

Item	Part No.	Description	Qty	Options
	419-18-41200	MOTOR THIS ASSEMBLY CONSISTS OF ALL PARTS SHOWN IN FIGS.Y1651-01A0A TO Y1651-06A0A.	1	SN:B10349--
1	(UC4020725866)	· ROTARY GROUP	1	SN:B10349--
2	(UC4020725967)	· CONTROL	1	SN:B10349--
3	UC1100701488	· HOUSING	1	SN:B10349--
4	UC4100105483	· PLUG ASS'Y	1	SN:B10349--
	UC1303026124	· · O-RING	1	SN:B10349--
5	UC1700834159	· WASHER	1	SN:B10349--
6	UC1708316622	· OIL SEAL	1	SN:B10349--
7	UC1700870191	· SHIM	1	SN:B10349--
8	UC1090877815	· O-RING	1	SN:B10349--
9	UC4704468625	· SCREW	2	SN:B10349--
10	UC1701524596	· NUT	2	SN:B10349--

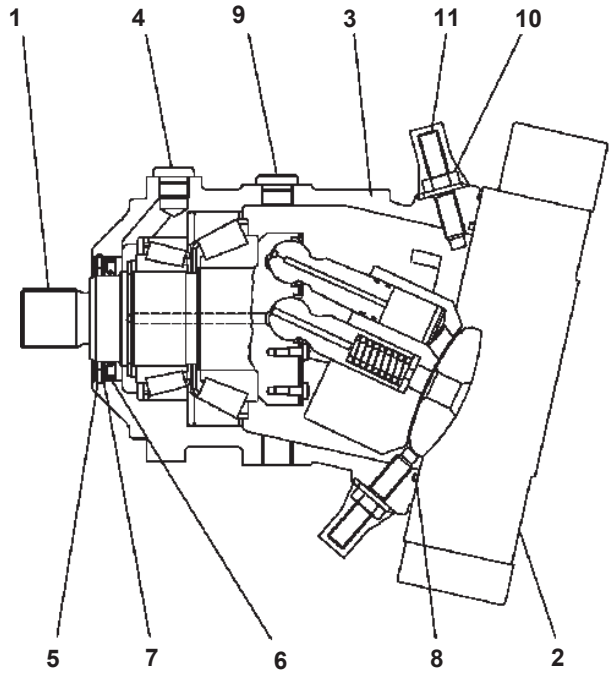

MOTOR (1/7) (#B10001-B10348)

Item	Part No.	Description	Qty	Options
	419-18-31301	MOTOR THIS ASSEMBLY CONSISTS OF ALL PARTS SHOWN IN FIGS.Y1651-01A1 TO Y1651-07A1.	1	SN:B10001--B10348
1	(UC4020725866)	· ROTARY GROUP	1	SN:B10001--B10348
2	(UC4020753421)	· CONTROL	1	SN:B10001--B10348
3	UC1100701488	· HOUSING	1	SN:B10001--B10348
4	UC4100105483	· PLUG ASS'Y	1	SN:B10001--B10348
5	UC1700834159	· WASHER	1	SN:B10001--B10348
6	UC1708316622	· OIL SEAL	1	SN:B10001--B10348
7	UC1700870191	· SHIM	1	SN:B10001--B10348
8	UC1090877815	· O-RING	1	SN:B10001--B10348
9	UC4100105483	· PLUG ASS'Y	1	SN:B10001--B10348
10	UC4704468625	· SCREW	2	SN:B10001--B10348
11	UC1701524596	· NUT	2	SN:B10001--B10348

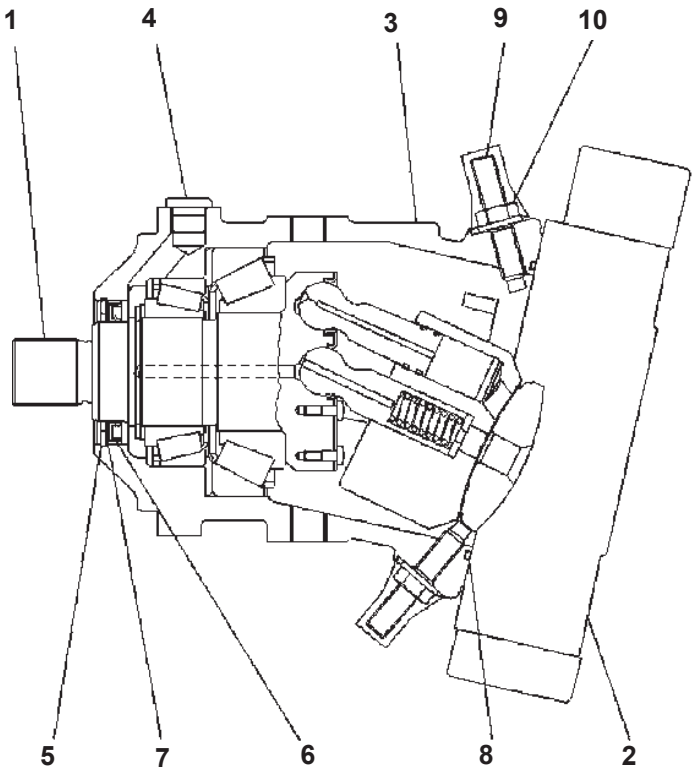

WA320-5 S/N B10001-UP

MOTOR (1/7) (#B10349-)

Item	Part No.	Description	Qty	Options
	419-18-41300	MOTOR THIS ASSEMBLY CONSISTS OF ALL PARTS SHOWN IN FIGS.Y1651-01A1A TO Y1651-07A1A.	1	SN:B10349--
1	(UC4020725866)	· ROTARY GROUP	1	SN:B10349--
2	(UCR902121764)	· CONTROL	1	SN:B10349--
3	UC1100701488	· HOUSING	1	SN:B10349--
4	UC4100105483	· PLUG ASS'Y	1	SN:B10349--
	UC1303026124	· · O-RING	1	SN:B10349--
5	UC1700834159	· WASHER	1	SN:B10349--
6	UC1708316622	· OIL SEAL	1	SN:B10349--
7	UC1700870191	· SHIM	1	SN:B10349--
8	UC1090877815	· O-RING	1	SN:B10349--
9	UC4704468625	· SCREW	2	SN:B10349--
10	UC1701524596	· NUT	2	SN:B10349--

Ref. Y1651-01A1A Page 420230

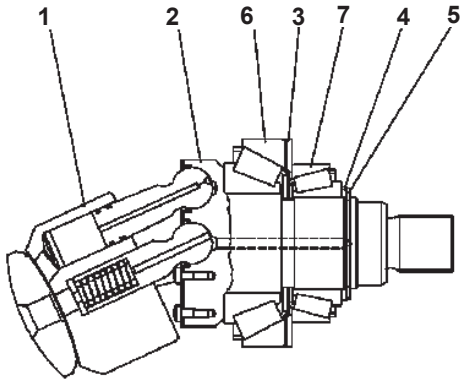

00002774

MOTOR (2/6) (#B10001-B10348)

Item	Part No.	Description	Qty	Options
	(419-18-31201)	MOTOR THIS ASSEMBLY CONSISTS OF ALL PARTS SHOWN IN FIGS.Y1651-01A0 TO Y1651-06A0.	1	SN:B10001--B10348
	(419-18-31301)	MOTOR THIS ASSEMBLY CONSISTS OF ALL PARTS SHOWN IN FIGS.Y1651-01A1 TO Y1651-07A1.	1	SN:B10001--B10348
	UC4020725866	· ROTARY GROUP	1	SN:B10001--B10348
1	(UC4096038857)	· · CYLINDER BLOCK	1	SN:B10001--B10348
2	☆	· · SHAFT	1	SN:B10001--B10348
3	☆	· · SHIM	1	SN:B10001--B10348
4	☆	· · PLATE¤ 3.15MM {BACK-UP}	1	SN:B10001--B10348
	☆	· · PLATE¤ 3.2MM {BACK-UP}	1	SN:B10001--B10348
	☆	· · PLATE¤ 3.25MM {BACK-UP}	1	SN:B10001--B10348
	☆	· · PLATE¤ 3.3MM {BACK-UP}	1	SN:B10001--B10348
	☆	· · PLATE¤ 3.35MM {BACK-UP}	1	SN:B10001--B10348
	☆	· · PLATE¤ 3.4MM {BACK-UP}	1	SN:B10001--B10348
	☆	· · PLATE¤ 3.45MM {BACK-UP}	1	SN:B10001--B10348
	☆	· · PLATE¤ 3.5MM {BACK-UP}	1	SN:B10001--B10348
5	☆	· · WASHER	1	SN:B10001--B10348
6	☆	· · BEARING	1	SN:B10001--B10348
7	☆	· · BEARING	1	SN:B10001--B10348

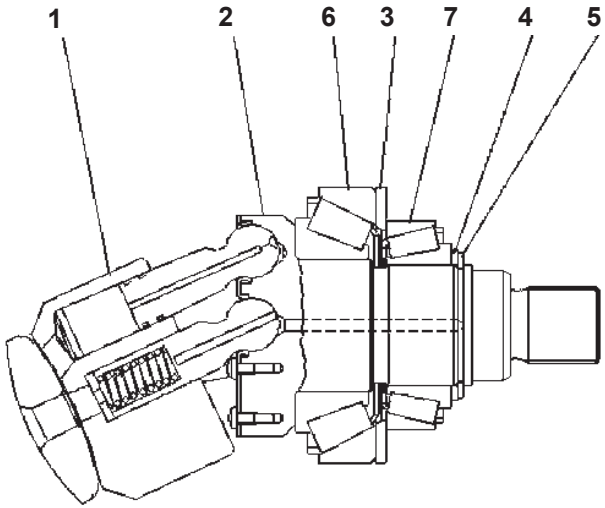

00002774

MOTOR (2/6) (#B10349-)

Item	Part No.	Description	Qty	Options
	(419-18-41200)	MOTOR THIS ASSEMBLY CONSISTS OF ALL PARTS SHOWN IN FIGS.Y1651-01A0A TO Y1651-06A0A.	1	SN:B10349--
	(419-18-41300)	MOTOR THIS ASSEMBLY CONSISTS OF ALL PARTS SHOWN IN FIGS.Y1651-01A1A TO Y1651-07A1A.	1	SN:B10349--
	UC4020725866	· ROTARY GROUP	1	SN:B10349--
1	(UC4096038857)	· · CYLINDER BLOCK	1	SN:B10349--
2	☆	· · SHAFT	1	SN:B10349--
3	☆	· · SHIM	1	SN:B10349--
4	☆	· · PLATE¤ 3.15MM {BACK-UP}	1	SN:B10349--
	☆	· · PLATE¤ 3.2MM {BACK-UP}	1	SN:B10349--
	☆	· · PLATE¤ 3.25MM {BACK-UP}	1	SN:B10349--
	☆	· · PLATE¤ 3.3MM {BACK-UP}	1	SN:B10349--
	☆	· · PLATE¤ 3.35MM {BACK-UP}	1	SN:B10349--
	☆	· · PLATE¤ 3.4MM {BACK-UP}	1	SN:B10349--
	☆	· · PLATE¤ 3.45MM {BACK-UP}	1	SN:B10349--
	☆	· · PLATE¤ 3.5MM {BACK-UP}	1	SN:B10349--
5	☆	· · WASHER	1	SN:B10349--
6	☆	· · BEARING	1	SN:B10349--
7	☆	· · BEARING	1	SN:B10349--

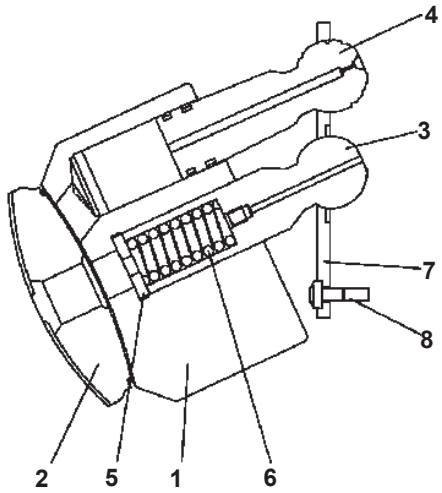

00007875

MOTOR (3/6) (#B10001-B10348)

Item	Part No.	Description	Qty	Options
	(419-18-31201)	MOTOR THIS ASSEMBLY CONSISTS OF ALL PARTS SHOWN IN FIGS.Y1651-01A0 TO Y1651-06A0.	1	SN:B10001--B10348
	(419-18-31301)	MOTOR THIS ASSEMBLY CONSISTS OF ALL PARTS SHOWN IN FIGS.Y1651-01A1 TO Y1651-07A1.	1	SN:B10001--B10348
	UC4096038857	· CYLINDER BLOCK	1	SN:B10001--B10348
1	UC1096506894	· · CYLINDER BLOCK	1	SN:B10001--B10348
2	UC1099217899	· · LENS {CONTROL}	1	SN:B10001--B10348
3	UC1099216044	· · PIN {CENTER}	1	SN:B10001--B10348
4	UC4020366779	· · PISTON ASS'Y	7	SN:B10001--B10348
5	UC1099215775	· · SHIM	1	SN:B10001--B10348
	UC1099215784	· · SHIM	1	SN:B10001--B10348
	UC1099215793	· · SHIM	1	SN:B10001--B10348
	UC1099215803	· · SHIM	1	SN:B10001--B10348
	UC1099215812	· · SHIM	1	SN:B10001--B10348
	UC1099215821	· · SHIM	1	SN:B10001--B10348
6	UC1099215839	· · SPRING	1	SN:B10001--B10348
7	UC1020366442	· · PLATE	1	SN:B10001--B10348
8	UC1708311094	· · SCREW	14	SN:B10001--B10348

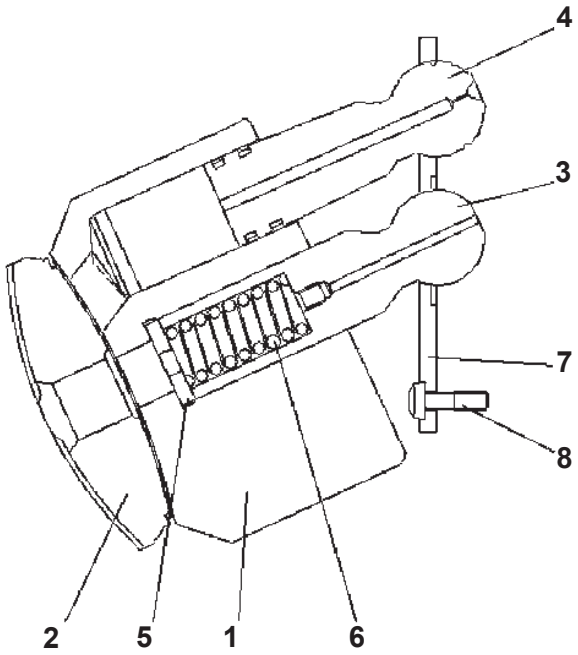

00007875

WA320-5 S/N B10001-UP

MOTOR (3/6) (#B10349-)

Item	Part No.	Description	Qty	Options
	(419-18-41200)	MOTOR THIS ASSEMBLY CONSISTS OF ALL PARTS SHOWN IN FIGS.Y1651-01A0A TO Y1651-06A0A.	1	SN:B10349--
	(419-18-41300)	MOTOR THIS ASSEMBLY CONSISTS OF ALL PARTS SHOWN IN FIGS.Y1651-01A1A TO Y1651-07A1A.	1	SN:B10349--
	UC4096038857	· CYLINDER BLOCK	1	SN:B10349--
1	UC1096506894	· · CYLINDER BLOCK	1	SN:B10349--
2	UC1099217899	· · LENS {CONTROL}	1	SN:B10349--
3	UC1099216044	· · PIN {CENTER}	1	SN:B10349--
4	UC4020366779	· · PISTON ASS'Y	7	SN:B10349--
5	UC1099215775	· · SHIM	1	SN:B10349--
	UC1099215784	· · SHIM	1	SN:B10349--
	UC1099215793	· · SHIM	1	SN:B10349--
	UC1099215803	· · SHIM	1	SN:B10349--
	UC1099215812	· · SHIM	1	SN:B10349--
	UC1099215821	· · SHIM	1	SN:B10349--
6	UC1099215839	· · SPRING	1	SN:B10349--
7	UC1020366442	· · PLATE	1	SN:B10349--
8	UC1708311094	· · SCREW	14	SN:B10349--

Ref. Y1651-03A0A Page 420270

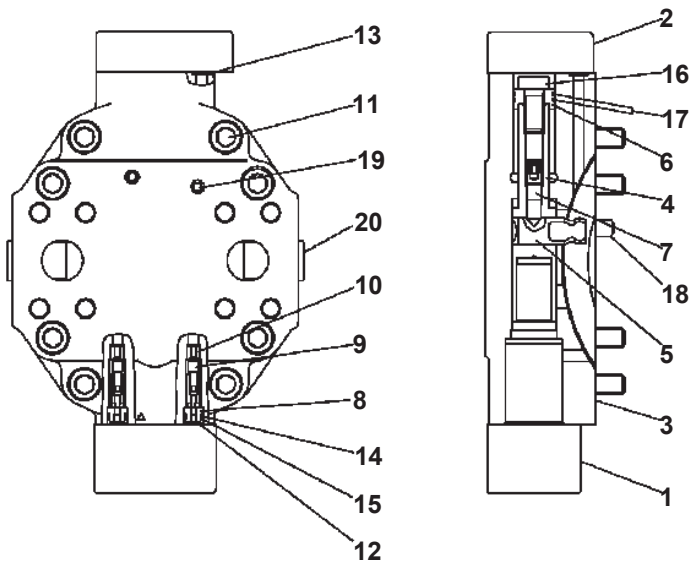

MOTOR (4/6) (#B10001-B10348)

Item	Part No.	Description	Qty	Options
	(419-18-31201)	MOTOR THIS ASSEMBLY CONSISTS OF ALL PARTS SHOWN IN FIGS.Y1651-01A0 TO Y1651-06A0.	1	SN:B10001--B10348
	UC4020725967	· CONTROL	1	SN:B10001--B10348
1	(UC4020572277)	· · CONTROL ASS'Y	1	SN:B10001--B10348
2	(UC4096037689)	· · COVER	1	SN:B10001--B10348
3	UC1099214644	· · PLATE	1	SN:B10001--B10348
4	UC1099214369	· · PISTON	1	SN:B10001--B10348
5	UC1094220213	· · TRUNNION	1	SN:B10001--B10348
6	UC1096522034	· · PISTON	1	SN:B10001--B10348
7	UC1704450168	· · BOLT	1	SN:B10001--B10348
8	UC1020753442	· · GUIDE	2	SN:B10001--B10348
9	UC1704266624	· · POPPET	2	SN:B10001--B10348
10	UC1704127565	· · SEAT {VALVE}	2	SN:B10001--B10348
11	UC1301632002	· · BOLT	8	SN:B10001--B10348
12	UC1300020004	· · O-RING	2	SN:B10001--B10348
13	UC1300028008	· · O-RING	6	SN:B10001--B10348
14	UC1300032007	· · O-RING	2	SN:B10001--B10348
15	UC1026023224	· · BACK-UP RING	2	SN:B10001--B10348
16	UC1098310576	· · BOLT	1	SN:B10001--B10348
17	UC1708321459	· · RING {PISTON}	3	SN:B10001--B10348
18	UC1700845425	· · PIN {PARALLEL}	2	SN:B10001--B10348
19	UC1098313189	· · PLUG	1	SN:B10001--B10348
20	UC1701570407	· · PLUG	2	SN:B10001--B10348

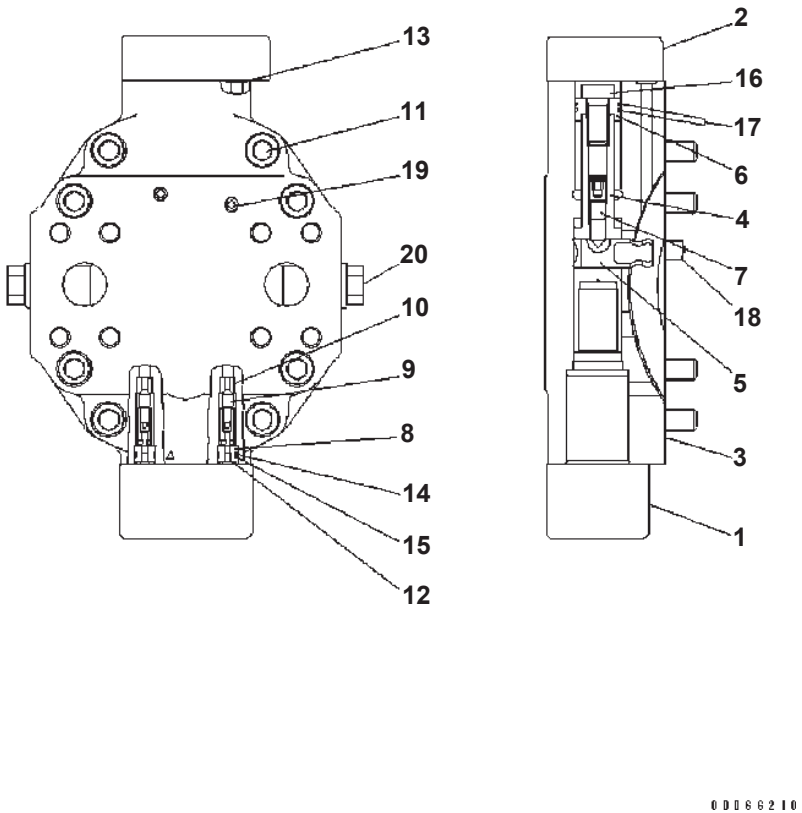

MOTOR (4/6) (#B10349-)

Item	Part No.	Description	Qty	Options
	(419-18-41200)	MOTOR THIS ASSEMBLY CONSISTS OF ALL PARTS SHOWN IN FIGS.Y1651-01A0A TO Y1651-06A0A.	1	SN:B10349--
	UC4020725967	· CONTROL	1	SN:B10349--
1	(UC4020572277)	· · CONTROL ASS'Y	1	SN:B10349--
2	(UC4096037689)	· · COVER	1	SN:B10349--
3	UC1099214644	· · PLATE	1	SN:B10349--
4	UC1099214369	· · PISTON	1	SN:B10349--
5	UC1094220213	· · TRUNNION	1	SN:B10349--
6	UC1096522034	· · PISTON	1	SN:B10349--
7	UC1704450168	· · BOLT	1	SN:B10349--
8	UC1020753442	· · GUIDE	2	SN:B10349--
9	UC1704266624	· · POPPET	2	SN:B10349--
10	UC1704127565	· · SEAT {VALVE}	2	SN:B10349--
11	UC1301632002	· · BOLT	8	SN:B10349--
12	UC1300020004	· · O-RING	2	SN:B10349--
13	UC1300028008	· · O-RING	6	SN:B10349--
14	UC1300032007	· · O-RING	2	SN:B10349--
15	UC1026023224	· · BACK-UP RING	2	SN:B10349--
16	UC1098310576	· · BOLT	1	SN:B10349--
17	UC1708321459	· · RING {PISTON}	3	SN:B10349--
18	UC1700845425	· · PIN {PARALLEL}	2	SN:B10349--
19	UC1098313189	· · PLUG	1	SN:B10349--
20	UCR902121738	· · PLUG	2	SN:B10349--
	UCR902115772	· · · PLUG	1	SN:B10349--
	UCR902602296	· · · WASHER	1	SN:B10349--

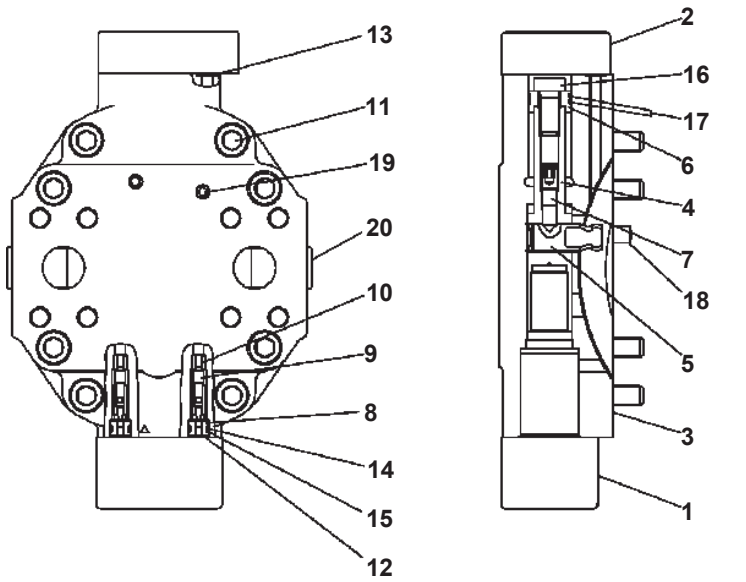

MOTOR (4/7) (#B10001-B10348)

Item	Part No.	Description	Qty	Options
	(419-18-31301)	MOTOR THIS ASSEMBLY CONSISTS OF ALL PARTS SHOWN IN FIGS.Y1651-01A1 TO Y1651-07A1.	1	SN:B10001--B10348
	UC4020753421	· CONTROL	1	SN:B10001--B10348
1	(UC4020753403)	· · CONTROL ASS'Y	1	SN:B10001--B10348
2	(UC4096037634)	· · FLASHING VALVE	1	SN:B10001--B10348
3	UC1099214644	· · PLATE	1	SN:B10001--B10348
4	UC1099214369	· · PISTON	1	SN:B10001--B10348
5	UC1094220213	· · TRUNNION	1	SN:B10001--B10348
6	UC1096522034	· · PISTON	1	SN:B10001--B10348
7	UC1704450168	· · BOLT {HEXAGON}	1	SN:B10001--B10348
8	UC1020753442	· · GUIDE {VALVE}	2	SN:B10001--B10348
9	UC1704266624	· · POPPET	2	SN:B10001--B10348
10	UC1704127565	· · SEAT {VALVE}	2	SN:B10001--B10348
11	UC1301632002	· · BOLT {HEXAGON}	8	SN:B10001--B10348
12	UC1300020004	· · O-RING	2	SN:B10001--B10348
13	UC1300028008	· · O-RING	6	SN:B10001--B10348
14	UC1300032007	· · O-RING	2	SN:B10001--B10348
15	UC1026023224	· · BACK-UP RING	2	SN:B10001--B10348
16	UC1098310576	· · BOLT {HEXAGON}	1	SN:B10001--B10348
17	UC1708321459	· · RING {PISTON}	3	SN:B10001--B10348
18	UC1700845425	· · PIN {PARALLEL}	2	SN:B10001--B10348
19	UC1098313189	· · PLUG	1	SN:B10001--B10348
20	UC1701570407	· · PLUG	2	SN:B10001--B10348

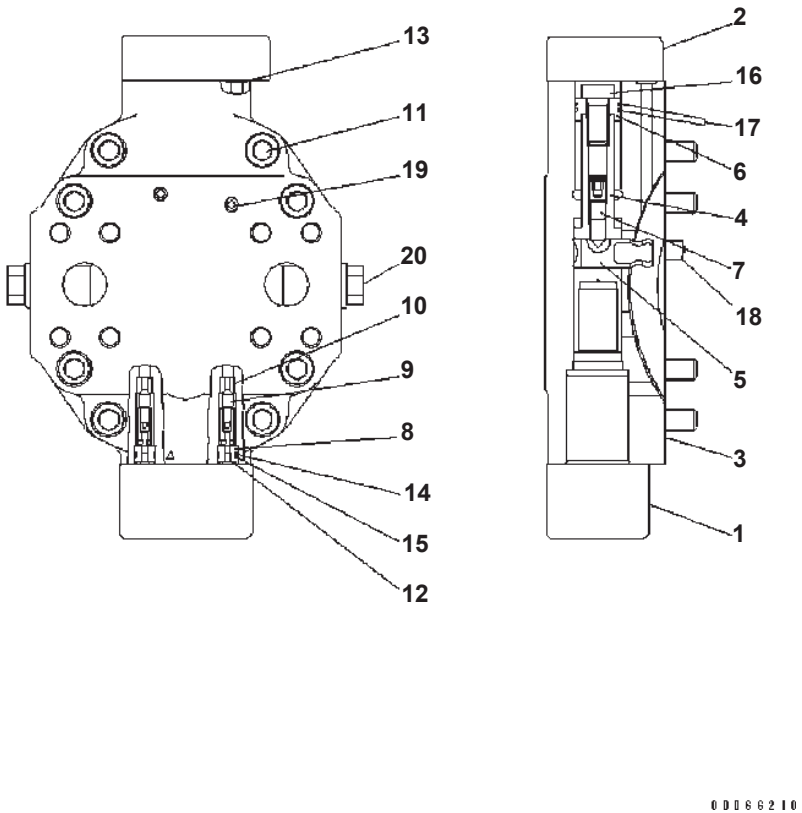

MOTOR (4/7) (#B10349-)

Item	Part No.	Description	Qty	Options
	(419-18-41300)	MOTOR THIS ASSEMBLY CONSISTS OF ALL PARTS SHOWN IN FIGS.Y1651-01A1A TO Y1651-07A1A.	1	SN:B10349--
	UC4020753421	· CONTROL	1	SN:B10349--
1	(UC4020753403)	· · CONTROL ASS'Y	1	SN:B10349--
2	(UC4096037634)	· · FLASHING VALVE	1	SN:B10349--
3	UC1099214644	· · PLATE	1	SN:B10349--
4	UC1099214369	· · PISTON	1	SN:B10349--
5	UC1094220213	· · TRUNNION	1	SN:B10349--
6	UC1096522034	· · PISTON	1	SN:B10349--
7	UC1704450168	· · BOLT {HEXAGON}	1	SN:B10349--
8	UC1020753442	· · GUIDE {VALVE}	2	SN:B10349--
9	UC1704266624	· · POPPET	2	SN:B10349--
10	UC1704127565	· · SEAT {VALVE}	2	SN:B10349--
11	UC1301632002	· · BOLT {HEXAGON}	8	SN:B10349--
12	UC1300020004	· · O-RING	2	SN:B10349--
13	UC1300028008	· · O-RING	6	SN:B10349--
14	UC1300032007	· · O-RING	2	SN:B10349--
15	UC1026023224	· · BACK-UP RING	2	SN:B10349--
16	UC1098310576	· · BOLT {HEXAGON}	1	SN:B10349--
17	UC1708321459	· · RING {PISTON}	3	SN:B10349--
18	UC1700845425	· · PIN {PARALLEL}	2	SN:B10349--
19	UC1098313189	· · PLUG	1	SN:B10349--
20	UCR902121738	· · PLUG	2	SN:B10349--
	UCR902115772	· · · PLUG	1	SN:B10349--
	UCR902602296	· · · WASHER	1	SN:B10349--

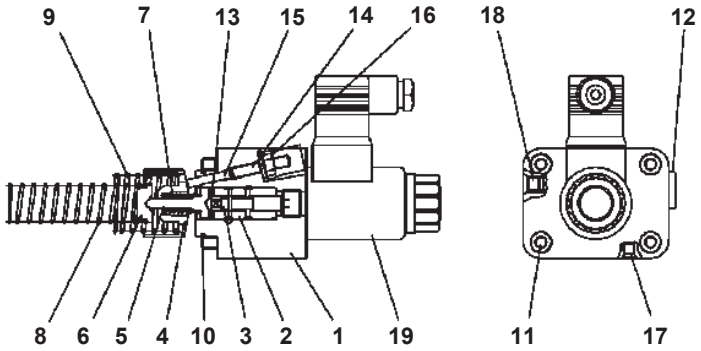

00002777

MOTOR (5/6) (#B10001-B10348)

Item	Part No.	Description	Qty	Options
	(419-18-31201)	MOTOR THIS ASSEMBLY CONSISTS OF ALL PARTS SHOWN IN FIGS.Y1651-01A0 TO Y1651-06A0.	1	SN:B10001--B10348
	UC4020572277	· CONTROL ASS'Y	1	SN:B10001--B10348
1	UC1020389463	· · HOUSING	1	SN:B10001--B10348
2	UC1704122469	· · BUSHING	1	SN:B10001--B10348
3	UC1720367765	· · SPOOL	1	SN:B10001--B10348
4	UC1706511191	· · SPRING	1	SN:B10001--B10348
5	UC1709213515	· · SPRING	1	SN:B10001--B10348
6	UC1094129889	· · SPRING	1	SN:B10001--B10348
7	UC1709214215	· · SPRING	1	SN:B10001--B10348
8	UC1094324452	· · SPRING	1	SN:B10001--B10348
9	UC1706511173	· · SPRING	1	SN:B10001--B10348
10	UC1300211008	· · O-RING	1	SN:B10001--B10348
11	UC1301571008	· · BOLT {HEXAGON}	4	SN:B10001--B10348
12	UC1701539305	· · PLUG	1	SN:B10001--B10348
13	UC1700833817	· · WASHER	1	SN:B10001--B10348
14	UC1302086116	· · SCREW {HEXAGON}	1	SN:B10001--B10348
15	UC1700871653	· · PIN	1	SN:B10001--B10348
16	UC1701524257	· · NUT {HEXAGON}	1	SN:B10001--B10348
17	UC1701538687	· · PLUG	1	SN:B10001--B10348
18	UC1701538807	· · PLUG	1	SN:B10001--B10348
19	UC1026017421	· · SOLENOID	1	SN:B10001--B10348

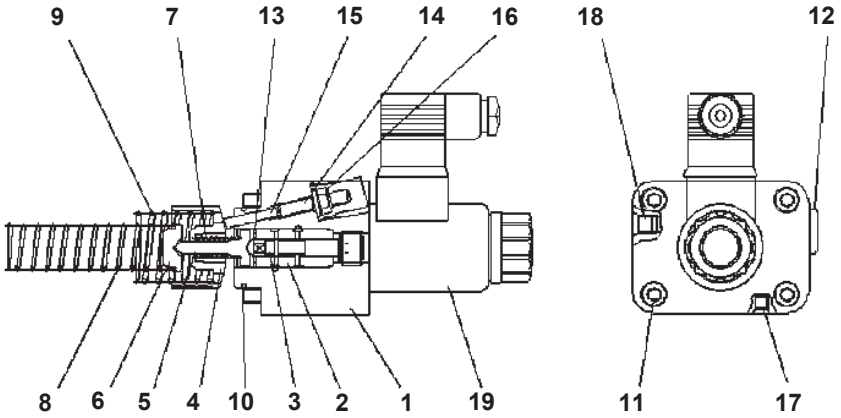

00002777

MOTOR (5/6) (#B10349-)

Item	Part No.	Description	Qty	Options
	(419-18-41200)	MOTOR THIS ASSEMBLY CONSISTS OF ALL PARTS SHOWN IN FIGS.Y1651-01A0A TO Y1651-06A0A.	1	SN:B10349--
	UC4020572277	· CONTROL ASS'Y	1	SN:B10349--
1	UC1020389463	· · HOUSING	1	SN:B10349--
2	UC1704122469	· · BUSHING	1	SN:B10349--
3	UC1720367765	· · SPOOL	1	SN:B10349--
4	UC1706511191	· · SPRING	1	SN:B10349--
5	UC1709213515	· · SPRING	1	SN:B10349--
6	UC1094129889	· · SPRING	1	SN:B10349--
7	UC1709214215	· · SPRING	1	SN:B10349--
8	UC1094324452	· · SPRING	1	SN:B10349--
9	UC1706511173	· · SPRING	1	SN:B10349--
10	UC1026026416	· · SOLENOID	1	SN:B10349--
11	UC1301571008	· · BOLT {HEXAGON}	4	SN:B10349--
12	UC1701539305	· · PLUG	1	SN:B10349--
13	UC1700833817	· · WASHER	1	SN:B10349--
14	UC1302086116	· · SCREW {HEXAGON}	1	SN:B10349--
15	UC1700871653	· · PIN	1	SN:B10349--
16	UC1701524257	· · NUT {HEXAGON}	1	SN:B10349--
17	UC1701538687	· · PLUG	1	SN:B10349--
18	UC1701538807	· · PLUG	1	SN:B10349--
19	UC1026026416	· · SOLENOID	1	SN:B10349--

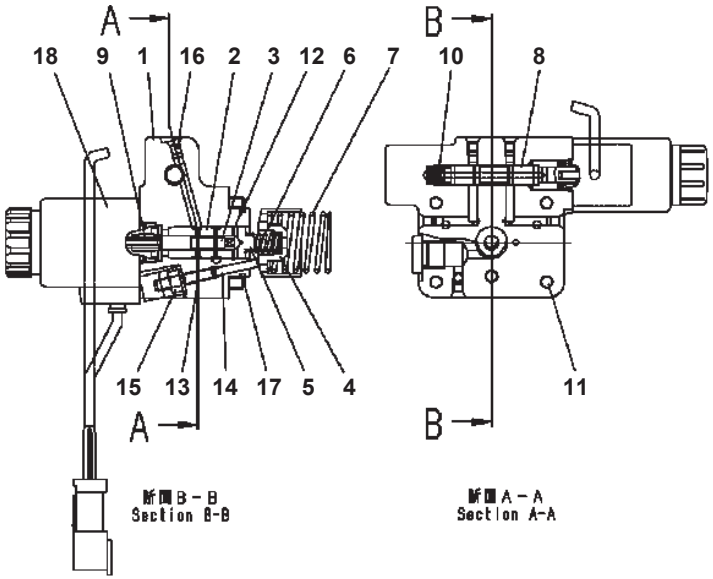

MOTOR (5/7) (#B10001-B10348)

Item	Part No.	Description	Qty	Options
	(419-18-31301)	MOTOR THIS ASSEMBLY CONSISTS OF ALL PARTS SHOWN IN FIGS.Y1651-01A1 TO Y1651-07A1.	1	SN:B10001--B10348
	UC4020753403	・ CONTROL ASS'Y	1	SN:B10001--B10348
1	UC1020772287	・・ HOUSING {CONTROL}	1	SN:B10001--B10348
2	UC1094326623	・・ BUSHING {CONTROL}	1	SN:B10001--B10348
3	UC1020069563	・・ CONTROL PISTON	1	SN:B10001--B10348
4	UC1706511191	・・ SPRING	1	SN:B10001--B10348
5	UC1709213395	・・ SPRING	1	SN:B10001--B10348
6	UC1709214196	・・ SPRING	1	SN:B10001--B10348
7	UC1706511173	・・ SPRING	1	SN:B10001--B10348
8	UC1020451292	・・ CONTROL PISTON	1	SN:B10001--B10348
9	UC1096501963	・・ BUSHING	1	SN:B10001--B10348
10	UC1020450648	・・ SPRING	1	SN:B10001--B10348
11	UC1301571008	・・ BOLT {HEXAGON}	4	SN:B10001--B10348
12	UC1700833817	・・ WASHER	1	SN:B10001--B10348
13	UC1302086116	・・ SCREW {HEXAGON}	1	SN:B10001--B10348
14	UC1700877569	・・ PIN {PARALLEL}	1	SN:B10001--B10348
15	UC1701524257	・・ NUT {HEXAGON}	1	SN:B10001--B10348
16	UC1701538687	・・ PLUG	5	SN:B10001--B10348
17	UC1300211008	・・ O-RING	1	SN:B10001--B10348
18	UC4020757708	・・ SOLENOID	2	SN:B10001--B10348

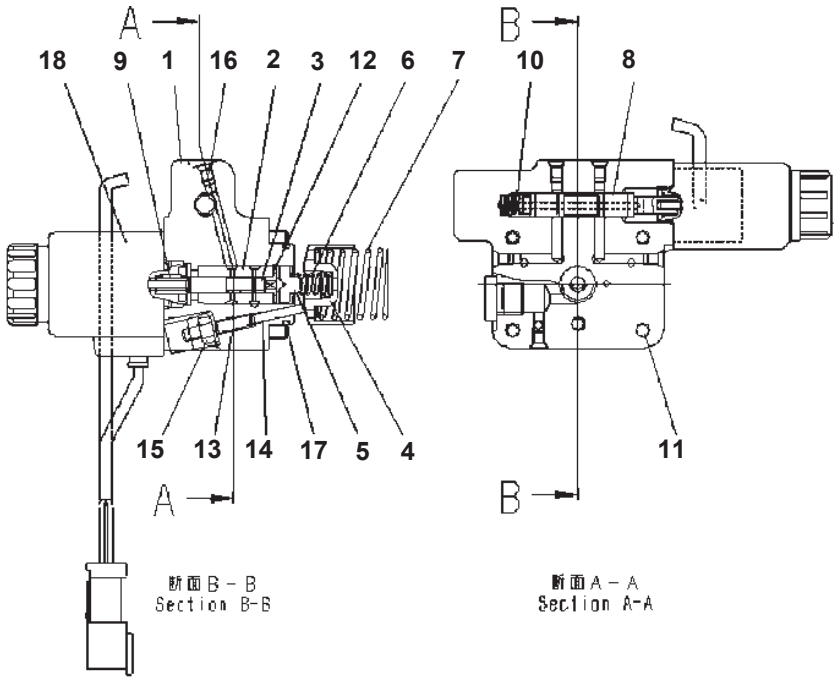

MOTOR (5/7) (#B10349-)

Item	Part No.	Description	Qty	Options
	(419-18-41300)	MOTOR THIS ASSEMBLY CONSISTS OF ALL PARTS SHOWN IN FIGS.Y1651-01A1A TO Y1651-07A1A.	1	SN:B10349--
	UC4020753403	・ CONTROL ASS'Y	1	SN:B10349--
1	UC1020772287	・・ HOUSING {CONTROL}	1	SN:B10349--
2	UC1094326623	・・ BUSHING {CONTROL}	1	SN:B10349--
3	UC1020069563	・・ CONTROL PISTON	1	SN:B10349--
4	UC1706511191	・・ SPRING	1	SN:B10349--
5	UC1709213395	・・ SPRING	1	SN:B10349--
6	UC1709214196	・・ SPRING	1	SN:B10349--
7	UC1706511173	・・ SPRING	1	SN:B10349--
8	UC1020451292	・・ CONTROL PISTON	1	SN:B10349--
9	UC1096501963	・・ BUSHING	1	SN:B10349--
10	UC1020450648	・・ SPRING	1	SN:B10349--
11	UC1301571008	・・ BOLT {HEXAGON}	4	SN:B10349--
12	UC1700833817	・・ WASHER	1	SN:B10349--
13	UC1302086116	・・ SCREW {HEXAGON}	1	SN:B10349--
14	UC1700877569	・・ PIN {PARALLEL}	1	SN:B10349--
15	UC1701524257	・・ NUT {HEXAGON}	1	SN:B10349--
16	UC1701538687	・・ PLUG	5	SN:B10349--
17	UC1300211008	・・ O-RING	1	SN:B10349--
18	UC4020757708	・・ SOLENOID	2	SN:B10349--

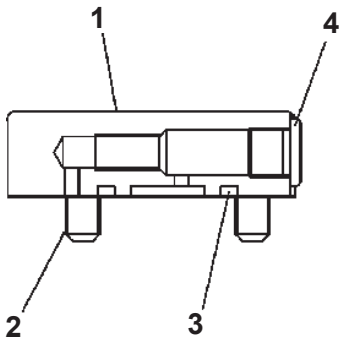

00002779

MOTOR (6/6) (#B10001-B10348)

Item	Part No.	Description	Qty	Options
	(419-18-31201)	MOTOR THIS ASSEMBLY CONSISTS OF ALL PARTS SHOWN IN FIGS.Y1651-01A0 TO Y1651-06A0.	1	SN:B10001--B10348
	UC4096037689	COVER	1	SN:B10001--B10348
1	UC1094459907	· COVER	1	SN:B10001--B10348
2	UC1700832061	· BOLT {HEXAGON}	4	SN:B10001--B10348
3	UC1300384005	· O-RING	1	SN:B10001--B10348
4	UC1701539305	· PLUG	1	SN:B10001--B10348

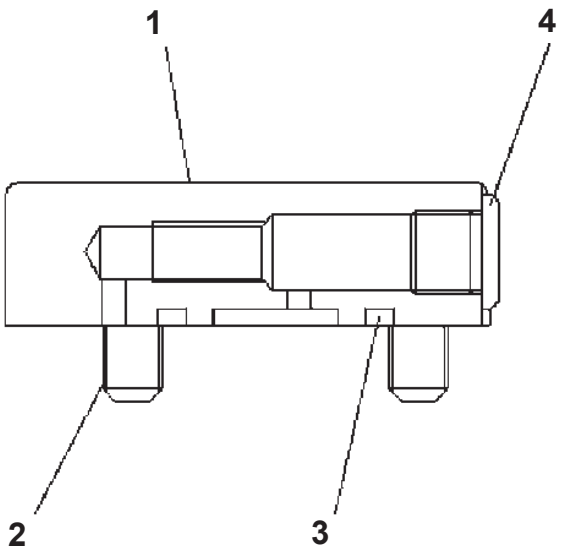

00002779

MOTOR (6/6) (#B10349-)

Item	Part No.	Description	Qty	Options
	(419-18-41200)	MOTOR THIS ASSEMBLY CONSISTS OF ALL PARTS SHOWN IN FIGS.Y1651-01A0 TO Y1651-06A0.	1	SN:B10349--
	UC4096037689	COVER	1	SN:B10349--
1	UC1094459907	・ COVER	1	SN:B10349--
2	UC1098315929	・ BOLT {HEXAGON}	4	SN:B10349--
3	UC1300384005	・ O-RING	1	SN:B10349--
4	UC1701539305	・ PLUG	1	SN:B10349--

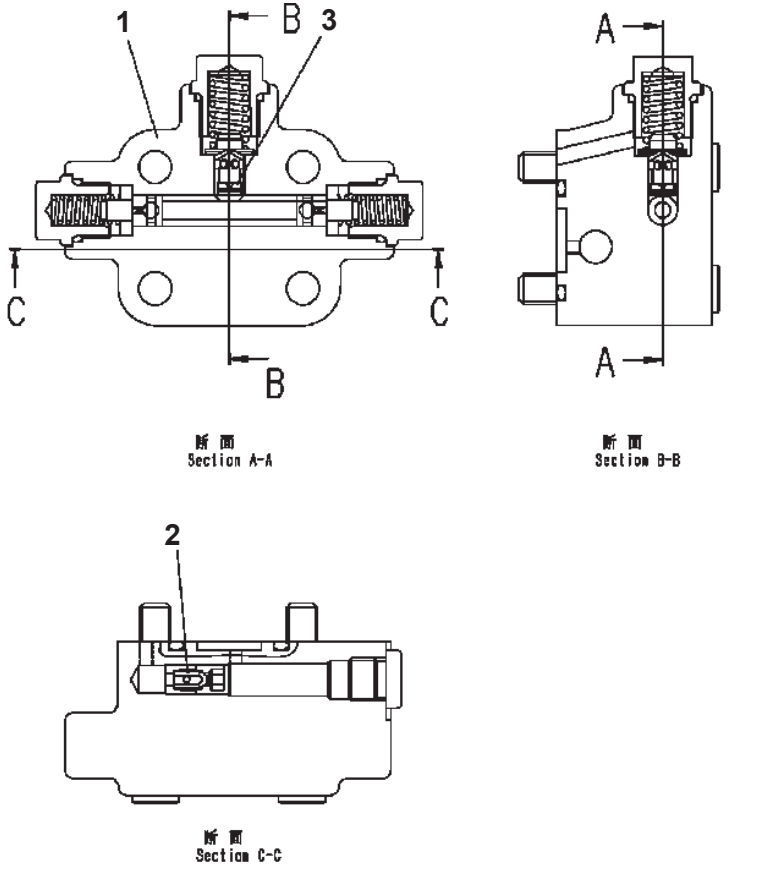

MOTOR (6/7) (WITH ORIFICE) (#B10001-B10348)

Item	Part No.	Description	Qty	Options
	(419-18-31301)	MOTOR THIS ASSEMBLY CONSISTS OF ALL PARTS SHOWN IN FIGS.Y1651-01A1 TO Y1651-07A1.	1	SN:B10001--B10348
	UC4096037634	· FLASHING VALVE	1	SN:B10001--B10348
1	(UC4020028468)	· · FLASHING VALVE	1	SN:B10001--B10348
2	UC4704466252	· · ORIFICE	1	SN:B10001--B10348
3	UC4704475917	· · ORIFICE	1	SN:B10001--B10348

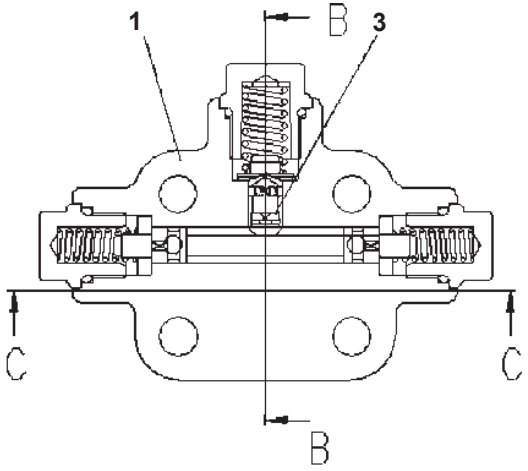

断 面
Section A-A

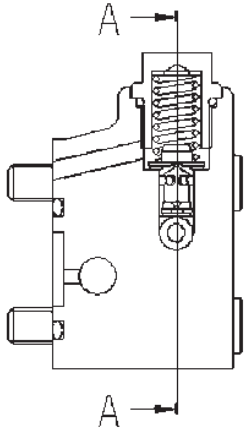

断 面
Section B-B

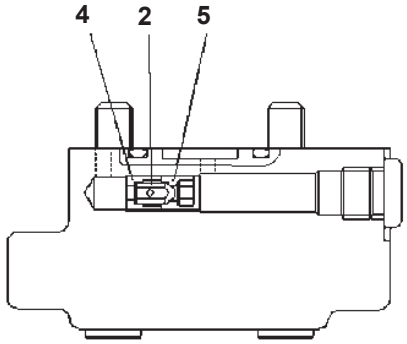

断 面
Section C-C

00066211

MOTOR (6/7) (WITH ORIFICE) (#B10349-)

Item	Part No.	Description	Qty	Options
	(419-18-41300)	MOTOR THIS ASSEMBLY CONSISTS OF ALL PARTS SHOWN IN FIGS.Y1651-01A1A TO Y1651-07A1A.	1	SN:B10349--
	UCR902115809	· FLASHING VALVE	1	SN:B10349--
1	(UCR902115773)	· · FLASHING VALVE	1	SN:B10349--
2	UC1704258687	· · ORIFICE	1	SN:B10349--
3	UC1704196974	· · ORIFICE	1	SN:B10349--
4	UC1704002631	· · GUIDE	1	SN:B10349--
5	UC1704002649	· · GUIDE	1	SN:B10349--

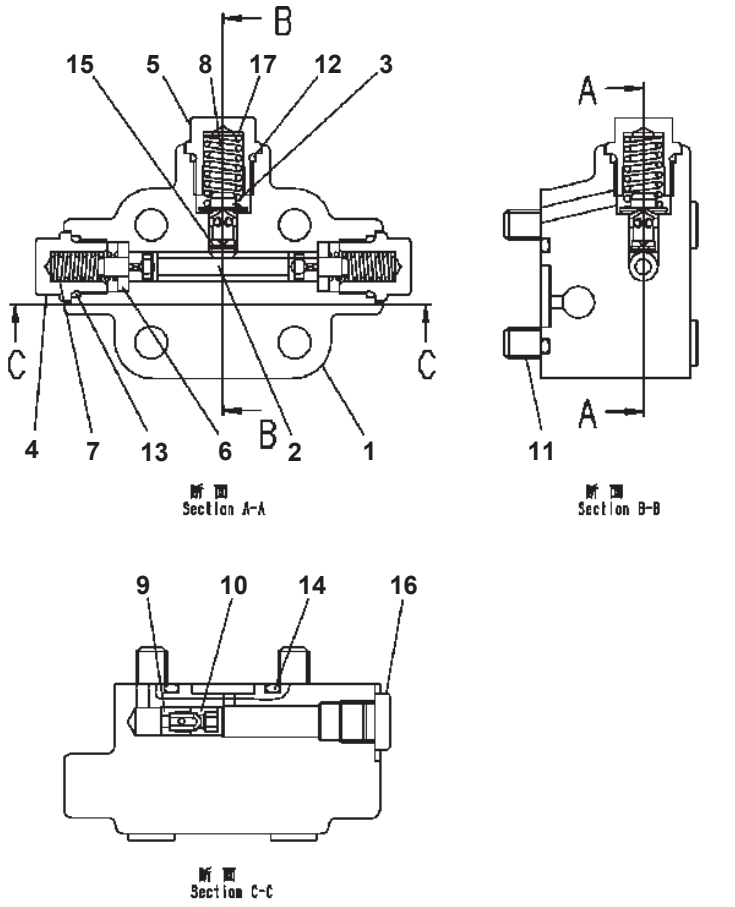

Section A-A

Section B-B

Section C-C

MOTOR (7/7) (WITHOUT ORIFICE) (#B10001-B10348)

Item	Part No.	Description	Qty	Options
	(419-18-31301)	MOTOR THIS ASSEMBLY CONSISTS OF ALL PARTS SHOWN IN FIGS.Y1651-01A1 TO Y1651-07A1.	1	SN:B10001--B10348
	UC4020028468	・ FLASHING VALVE	1	SN:B10001--B10348
1	UC1704497579	・・ BODY	1	SN:B10001--B10348
2	UC1720001575	・・ SPOOL	1	SN:B10001--B10348
3	UC1704302344	・・ PLUNGER	1	SN:B10001--B10348
4	UC1704171113	・・ PLUG	2	SN:B10001--B10348
5	UC1704178462	・・ PLUG	1	SN:B10001--B10348
6	UC1704171122	・・ SPRING SEAT	2	SN:B10001--B10348
7	UC1720119218	・・ SPRING	2	SN:B10001--B10348
8	UC1704178489	・・ SPRING	1	SN:B10001--B10348
9	UC1704002631	・・ GUIDE	1	SN:B10001--B10348
10	UC1704002649	・・ GUIDE	1	SN:B10001--B10348
11	UC1301616009	・・ BOLT {HEXAGON}	4	SN:B10001--B10348
12	UC1300156002	・・ O-RING	1	SN:B10001--B10348
13	UC1300152009	・・ O-RING	2	SN:B10001--B10348
14	UC1300384005	・・ O-RING	1	SN:B10001--B10348
15	UC1701530124	・・ WASHER	1	SN:B10001--B10348
16	UC1701539305	・・ PLUG	1	SN:B10001--B10348
17	UC1701570791	・・ SHIM, 1.0MM	1	SN:B10001--B10348
	UC1701579651	・・ SHIM, 0.3MM	1	SN:B10001--B10348
	UC1701579669	・・ SHIM, 0.5MM	1	SN:B10001--B10348

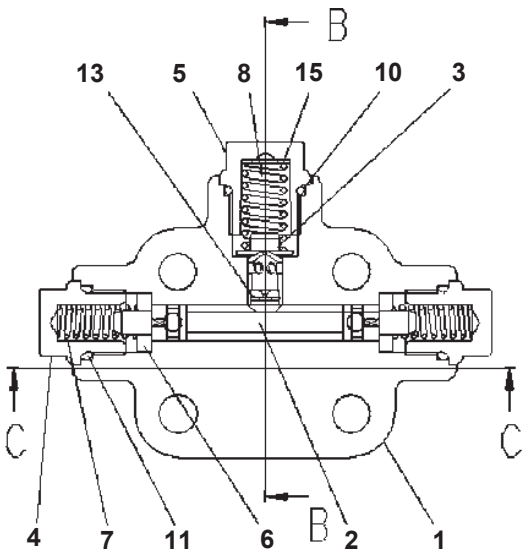

断 面
Section A-A

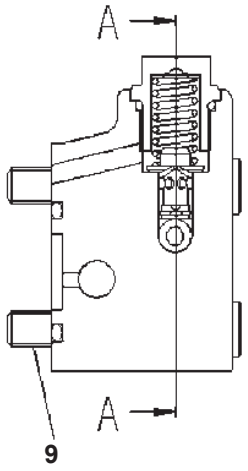

断 面
Section B-B

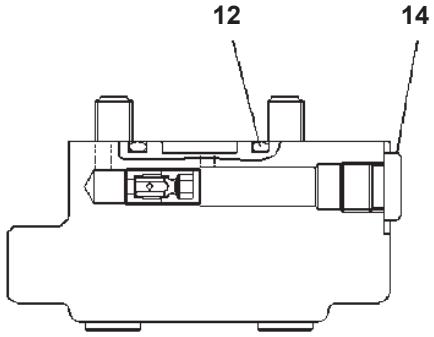

断 面
Section C-C

00066212

MOTOR (7/7) (WITHOUT ORIFICE) (#B10349-)

Item	Part No.	Description	Qty	Options
	(419-18-41300)	MOTOR THIS ASSEMBLY CONSISTS OF ALL PARTS SHOWN IN FIGS.Y1651-01A1A TO Y1651-07A1A.	1	SN:B10349--
	UCR902115773	· FLASHING VALVE	1	SN:B10349--
1	UCR902115700	· · BODY	1	SN:B10349--
2	UC1720001575	· · SPOOL	1	SN:B10349--
3	UC1704302344	· · PLUNGER	1	SN:B10349--
4	UCR902115717	· · PLUG	2	SN:B10349--
5	UCR902115716	· · PLUG	1	SN:B10349--
6	UC1704171122	· · SPRING SEAT	2	SN:B10349--
7	UC1720119218	· · SPRING	2	SN:B10349--
8	UC1704178489	· · SPRING	1	SN:B10349--
9	UC1301616009	· · BOLT, HEXAGON	4	SN:B10349--
10	UC1098308629	· · O-RING	1	SN:B10349--
11	UC1098308601	· · O-RING	2	SN:B10349--
12	UC1300384005	· · O-RING	1	SN:B10349--
13	UC1701530124	· · WASHER	1	SN:B10349--
14	UC1701539305	· · PLUG	1	SN:B10349--
15	UC1701570791	· · SHIM, 1.0MM	1	SN:B10349--
	UC1701579651	· · SHIM, 0.3MM	1	SN:B10349--
	UC1701579669	· · SHIM, 0.5MM	1	SN:B10349--

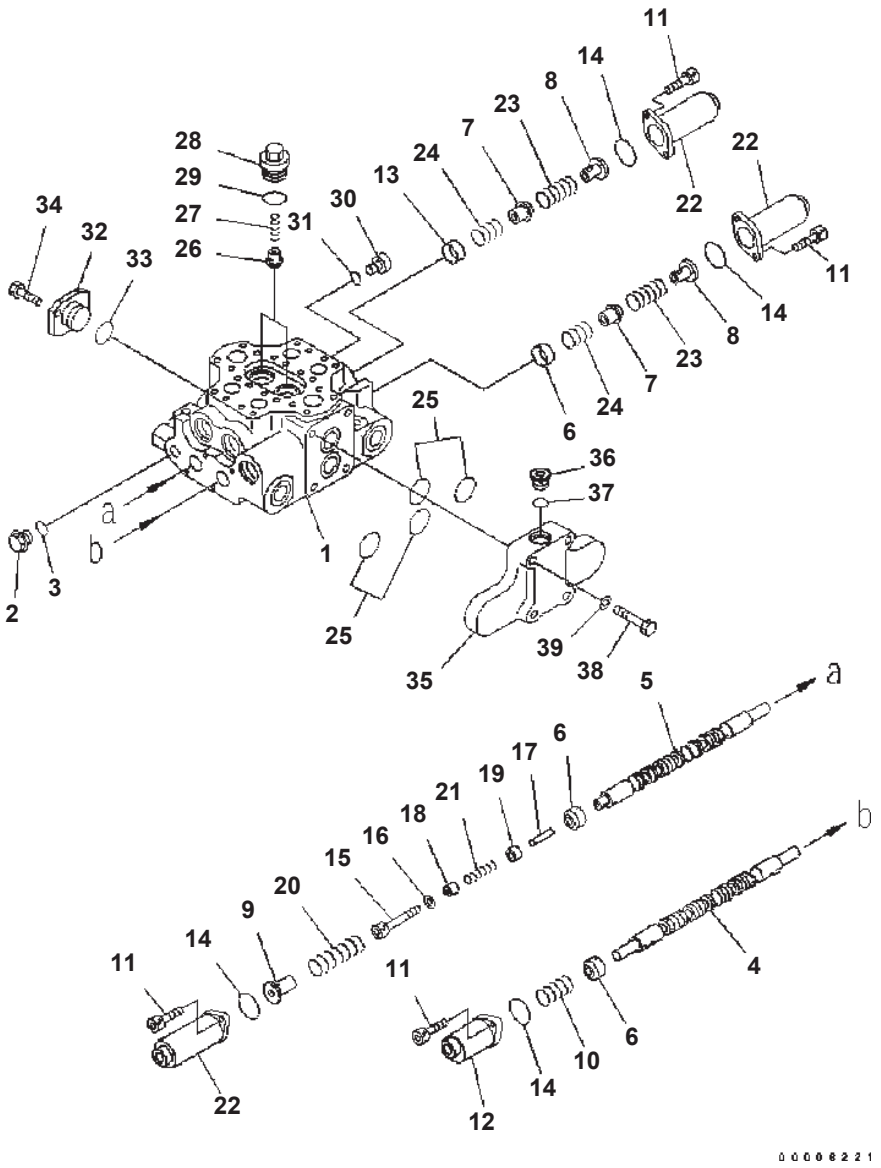

CONTROL VALVE (2-SPOOL) (1/2)

Item	Part No.	Description	Qty	Options
	700-92-39000	CONTROL VALVE THIS ASSEMBLY CONSISTS OF ALL PARTS SHOWN IN FIGS.Y1662-01A0 T0 Y1662-02A0.	1	SN:B10001--
	700-92-00110	· BODY SUB ASS'Y	1	SN:B10001--
1	☆	· · BODY {VALVE}	1	SN:B10001--
2	700-22-11370	· · PLUG	4	SN:B10001--
3	07002-12434	· · O-RING	4	SN:B10001--
4	☆	· · SPOOL	1	SN:B10001--
5	☆	· · SPOOL	1	SN:B10001--
6	709-94-91130	· · RETAINER	3	SN:B10001--
7	709-94-92530	· · RETAINER	2	SN:B10001--
8	709-94-92540	· · RETAINER	2	SN:B10001--
9	709-94-91170	· · RETAINER	1	SN:B10001--
10	709-94-91120	· · SPRING	1	SN:B10001--
11	01252-60820	· · BOLT	8	SN:B10001--
12	709-94-91210	· · CASE	1	SN:B10001--
13	700-92-11750	· · RETAINER	1	SN:B10001--
14	07430-71380	· · O-RING	4	SN:B10001--
15	700-22-11910	· · BOLT	1	SN:B10001--
16	01643-30623	· · WASHER	1	SN:B10001--
17	700-92-11730	· · COLLAR	1	SN:B10001--
18	700-92-11910	· · RETAINER	1	SN:B10001--
19	700-92-11740	· · RETAINER	1	SN:B10001--
20	700-92-11880	· · SPRING	1	SN:B10001--
21	700-92-11890	· · SPRING	1	SN:B10001--
22	709-94-92560	· · CASE	3	SN:B10001--
23	700-92-11760	· · SPRING	2	SN:B10001--
24	709-94-92510	· · SPRING	2	SN:B10001--
25	07000-13038	· · O-RING	4	SN:B10001--
26	700-93-11461	· · VALVE {CHECK}	2	SN:B10001--
27	700-93-11471	· · SPRING	2	SN:B10001--
28	700-93-11481	· · PLUG	2	SN:B10001--
29	07002-13634	· · O-RING	2	SN:B10001--
30	07041-13612	· · PLUG	1	SN:B10001--
31	07002-13634	· · O-RING	1	SN:B10001--
32	700-93-12111	· · FLANGE	1	SN:B10001--
33	07000-13035	· · O-RING	1	SN:B10001--
34	01010-81025	· · BOLT	2	SN:B10001--
35	700-92-11870	· COVER	1	SN:B10001--

WA320-5 S/N B10001-UP

CONTROL VALVE (2-SPOOL) (1/2)

Item	Part No.	Description	Qty	Options
36	723-26-15230	· PLUG	1	SN:B10001--
37	07002-12434	· O-RING	1	SN:B10001--
38	01011-81235	· BOLT	4	SN:B10001--
39	01643-51232	· WASHER	4	SN:B10001--

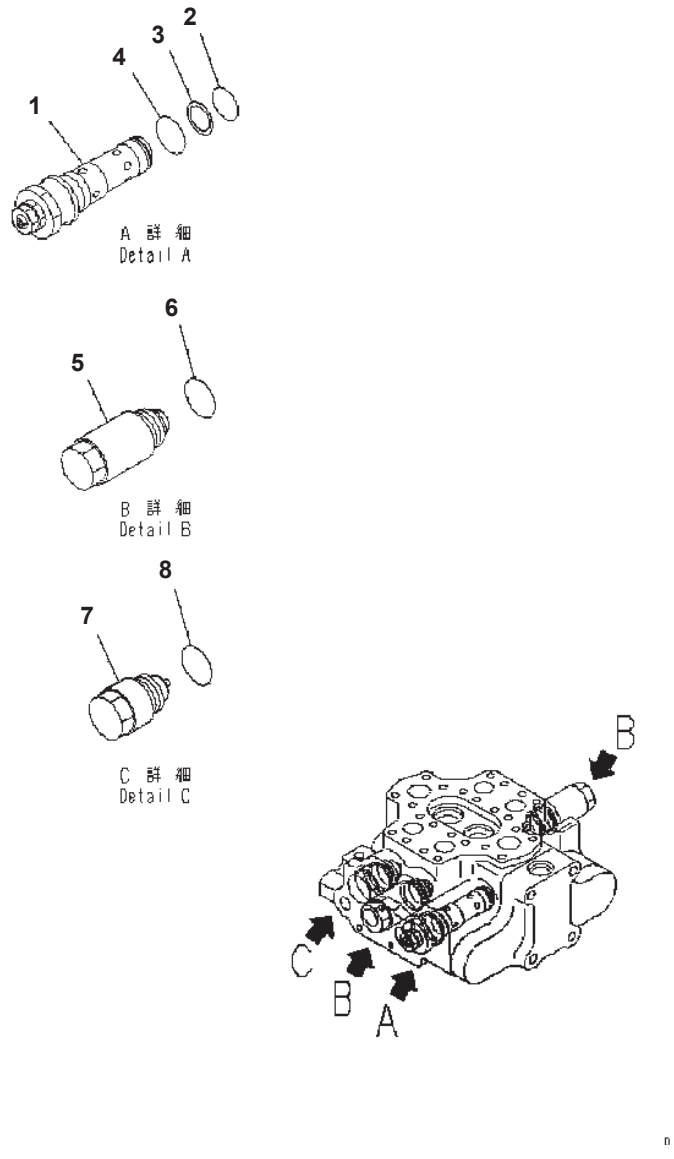

CONTROL VALVE (2-SPOOL VALVE) (2/2)

Item	Part No.	Description	Qty	Options
	(700-92-39000)	CONTROL VALVE THIS ASSEMBLY CONSISTS OF ALL PARTS SHOWN IN FIGS.Y1662-01A0 T0 Y1662-02A0.	1	SN:B10001--
1	709-90-54501	・ VALVE ASS'Y, RELIEF	1	SN:B10001--
2	700-93-11320	・・ O-RING	1	SN:B10001--
3	700-93-11330	・・ RING, BACK-UP	1	SN:B10001--
4	07002-13634	・・ O-RING	1	SN:B10001--
5	709-10-62101	・ VALVE ASS'Y, SUCTION AND SAFETY	2	SN:B10001--
6	07002-03634	・・ O-RING	1	SN:B10001--
7	723-60-23800	・ VALVE ASS'Y, SUCTION	1	SN:B10001--
8	07002-13634	・・ O-RING	2	SN:B10001--

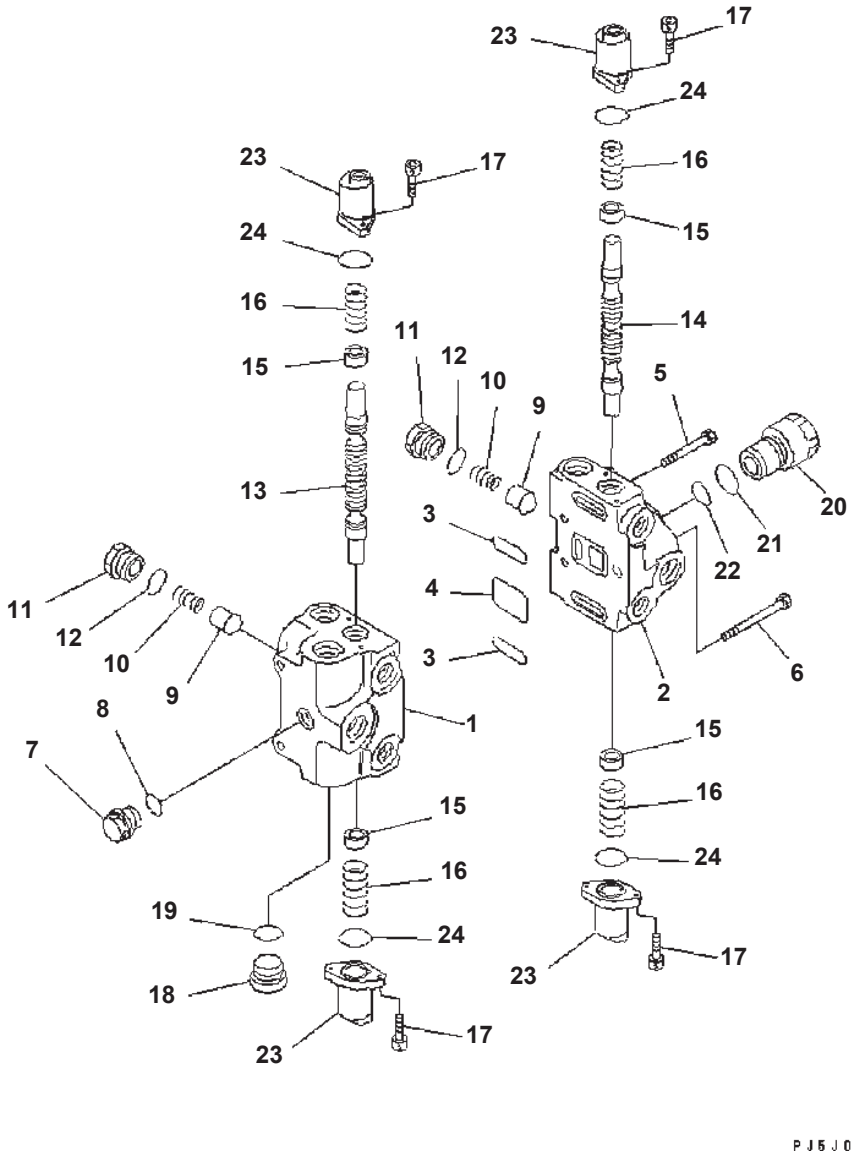

CONTROL VALVE (2-SPOOL) (1/2) (FOR ADDITIONAL 2-SPOOL VALVE)

Item	Part No.	Description	Qty	Options
	700-82-84001	CONTROL VALVE THIS ASSEMBLY CONSISTS OF ALL PARTS SHOWN IN FIGS.Y1662-11A0 TO Y1662-12A0.	1	SN:B10001--
	709-82-00161	· VALVE SUB ASS'Y	1	SN:B10001--
	709-82-10900	· · BODY SUB ASS'Y	1	SN:B10001--
1	☆	· · BODY, VALVE	1	SN:B10001--
2	☆	· · COVER, VALVE	1	SN:B10001--
3	07000-03030	· · O-RING	2	SN:B10001--
4	07000-13050	· · O-RING	1	SN:B10001--
5	700-82-11212	· · BOLT	2	SN:B10001--
6	700-82-11470	· · BOLT	1	SN:B10001--
7	700-22-11370	· · PLUG	1	SN:B10001--
8	07002-12434	· · O-RING	1	SN:B10001--
9	700-42-31460	· · VALVE	2	SN:B10001--
10	700-90-51320	· · SPRING	2	SN:B10001--
11	700-84-11320	· · PLUG	2	SN:B10001--
12	07002-13034	· · O-RING	2	SN:B10001--
13	☆	· · SPOOL	1	SN:B10001--
14	☆	· · SPOOL	1	SN:B10001--
15	700-84-13781	· · RETAINER	4	SN:B10001--
16	700-84-15740	· · SPRING	4	SN:B10001--
17	01252-30616	· · BOLT	8	SN:B10001--
18	07040-13316	· · PLUG	1	SN:B10001--
19	07002-03334	· · O-RING	1	SN:B10001--
20	700-84-12131	· · PLUG	1	SN:B10001--
21	07002-03334	· · O-RING	1	SN:B10001--
22	07000-13022	· · O-RING	1	SN:B10001--
23	700-84-12510	· · CASE	4	SN:B10001--
24	700-84-11240	· · O-RING	4	SN:B10001--

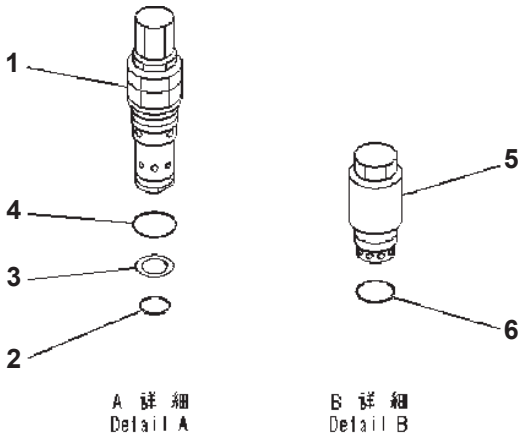

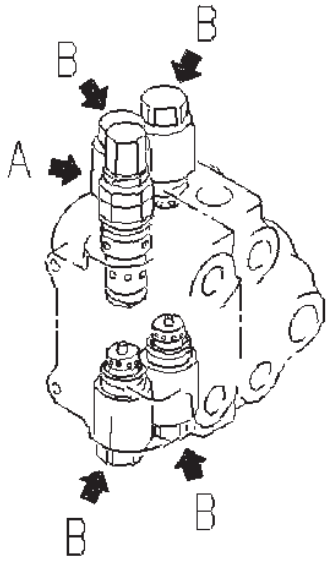

00015195

CONTROL VALVE (2-SPOOL) (2/2) (FOR ADDITIONAL 2-SPOOL VALVE)

Item	Part No.	Description	Qty	Options
	(700-82-84001)	CONTROL VALVE THIS ASSEMBLY CONSISTS OF ALL PARTS SHOWN IN FIGS.Y1662-11A0 T0 Y1662-12A0.	1	SN:B10001--
1	700-89-51000	・ VALVE ASS'Y, RELIEF	1	SN:B10001--
2	700-13-31161	・・ O-RING	1	SN:B10001--
3	700-80-51190	・・ RING, BACK-UP	1	SN:B10001--
4	07002-03334	・・ O-RING	1	SN:B10001--
5	700-82-62001	・ VALVE ASS'Y, SUCTION AND SAFETY	4	SN:B10001--
6	07002-03034	・・ O-RING	1	SN:B10001--

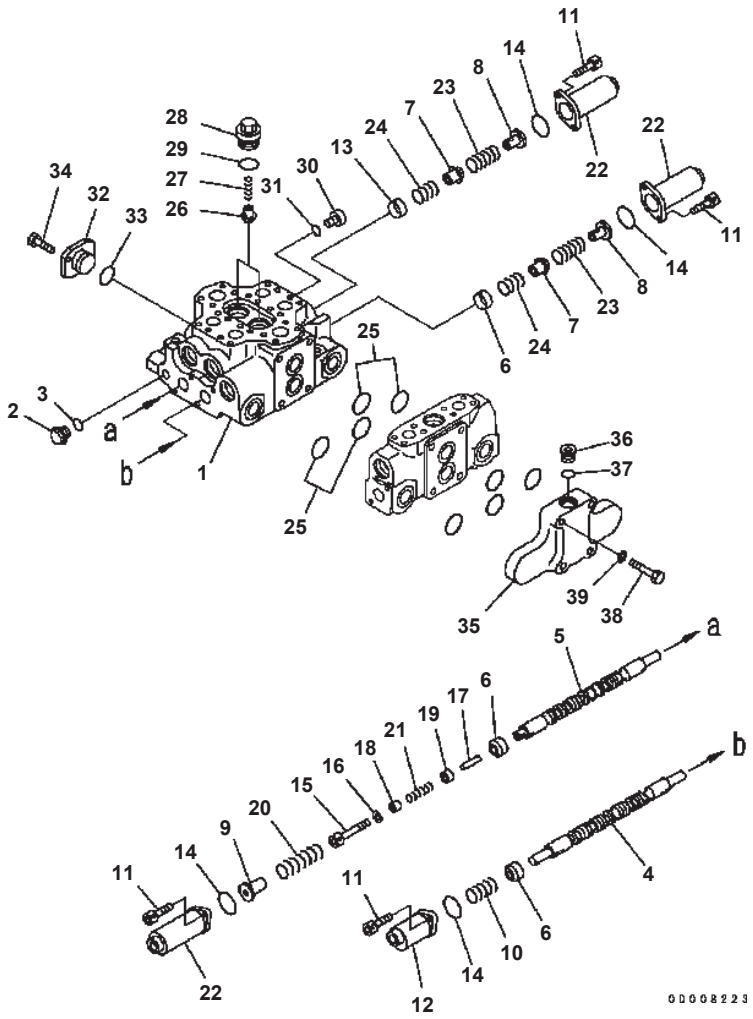

CONTROL VALVE (3-SPOOL) (1/3)

Item	Part No.	Description	Qty	Options
	709-93-12700	CONTROL VALVE THIS ASSEMBLY CONSISTS OF ALL PARTS SHOWN IN FIGS.Y1663-01A0 T0 Y1663-03A0.	1	SN:B10001--
	700-92-00110	· BODY SUB ASS'Y	1	SN:B10001--
1	☆	· · BODY {VALVE}	1	SN:B10001--
2	700-22-11370	· · PLUG	4	SN:B10001--
3	07002-12434	· · O-RING	4	SN:B10001--
4	☆	· · SPOOL	1	SN:B10001--
5	☆	· · SPOOL	1	SN:B10001--
6	709-94-91130	· · RETAINER	3	SN:B10001--
7	709-94-92530	· · RETAINER	2	SN:B10001--
8	709-94-92540	· · RETAINER	2	SN:B10001--
9	709-94-91170	· · RETAINER	1	SN:B10001--
10	709-94-91120	· · SPRING	1	SN:B10001--
11	01252-60820	· · BOLT	8	SN:B10001--
12	709-94-91210	· · CASE	1	SN:B10001--
13	700-92-11750	· · RETAINER	1	SN:B10001--
14	07430-71380	· · O-RING	4	SN:B10001--
15	700-22-11910	· · BOLT	1	SN:B10001--
16	01643-30623	· · WASHER	1	SN:B10001--
17	700-92-11730	· · COLLAR	1	SN:B10001--
18	700-92-11910	· · RETAINER	1	SN:B10001--
19	700-92-11740	· · RETAINER	1	SN:B10001--
20	700-92-11880	· · SPRING	1	SN:B10001--
21	700-92-11890	· · SPRING	1	SN:B10001--
22	709-94-92560	· · CASE	3	SN:B10001--
23	700-92-11760	· · SPRING	2	SN:B10001--
24	709-94-92510	· · SPRING	2	SN:B10001--
25	07000-13038	· · O-RING	4	SN:B10001--
26	700-93-11461	· · VALVE {CHECK}	2	SN:B10001--
27	700-93-11471	· · SPRING	2	SN:B10001--
28	700-93-11481	· · PLUG	2	SN:B10001--
29	07002-13634	· · O-RING	2	SN:B10001--
30	07041-13612	· · PLUG	1	SN:B10001--
31	07002-13634	· · O-RING	1	SN:B10001--
32	700-93-12111	· · FLANGE	1	SN:B10001--
33	07000-13035	· · O-RING	1	SN:B10001--
34	01010-81025	· · BOLT	2	SN:B10001--
35	700-92-11870	· COVER	1	SN:B10001--

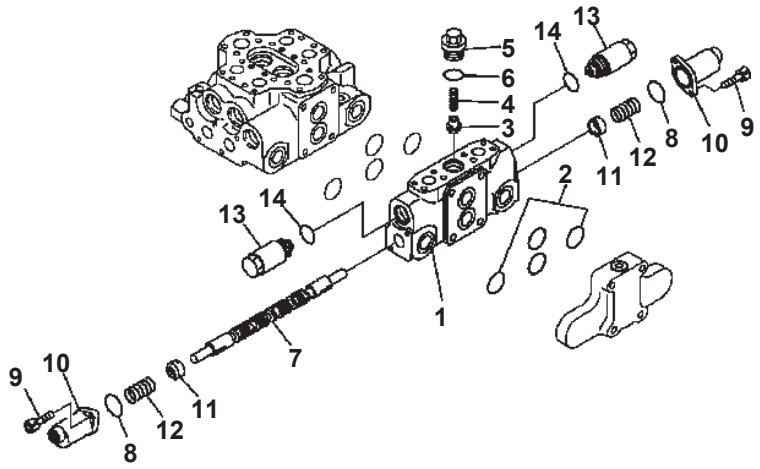

CONTROL VALVE (3-SPOOL) (2/3)

Item	Part No.	Description	Qty	Options
	(709-93-12700)	CONTROL VALVE THIS ASSEMBLY CONSISTS OF ALL PARTS SHOWN IN FIGS.Y1663-01A0 T0 Y1663-03A0.	1	SN:B10001--
	709-91-00110	· SERVICE VALVE	1	SN:B10001--
	709-91-00040	· · BODY SUB ASS'Y	1	SN:B10001--
1	☆	· · · BLOCK {VALVE}	1	SN:B10001--
2	07000-13038	· · · O-RING	4	SN:B10001--
3	700-93-11461	· · · VALVE {CHECK}	1	SN:B10001--
4	700-93-11471	· · · SPRING	1	SN:B10001--
5	700-93-11481	· · · PLUG	1	SN:B10001--
6	07002-13634	· · · O-RING	1	SN:B10001--
7	☆	· · · SPOOL	1	SN:B10001--
8	07430-71380	· · · O-RING	2	SN:B10001--
9	01252-30820	· · · BOLT	4	SN:B10001--
10	709-94-91210	· · · CASE	2	SN:B10001--
11	709-94-91130	· · · RETAINER	2	SN:B10001--
12	709-94-91120	· · · SPRING	2	SN:B10001--
13	709-10-62101	· · VALVE ASS'Y {SUCTION AND SAFETY}	2	SN:B10001--
14	07002-03634	· · · O-RING	1	SN:B10001--

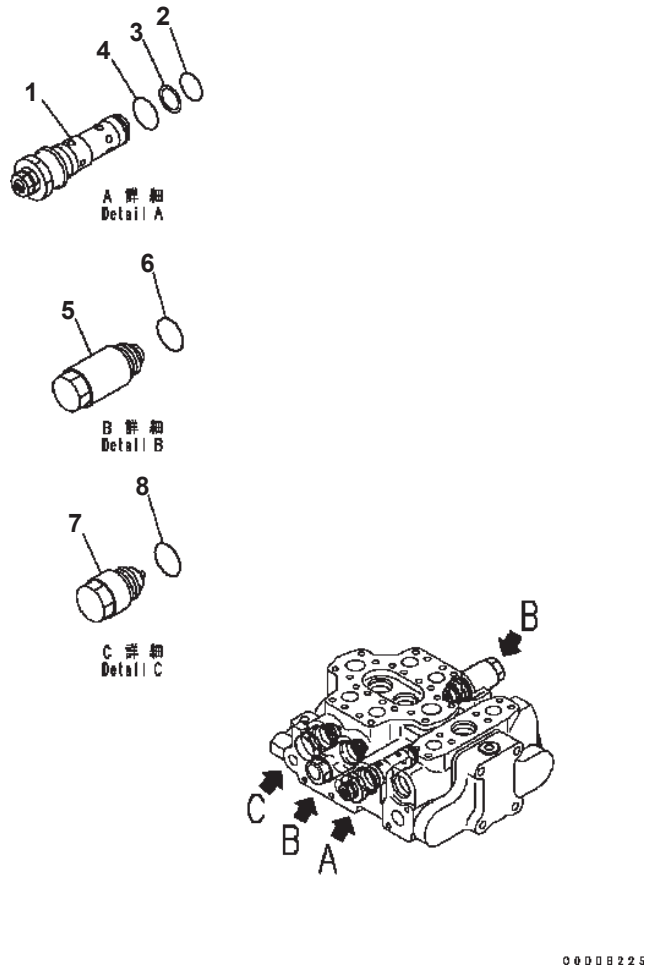

CONTROL VALVE (3-SPOOL) (3/3)

Item	Part No.	Description	Qty	Options
	(709-93-12700)	CONTROL VALVE THIS ASSEMBLY CONSISTS OF ALL PARTS SHOWN IN FIGS.Y1663-01A0 T0 Y1663-03A0.	1	SN:B10001--
1	709-90-54501	・ VALVE ASS'Y {RELIEF}	1	SN:B10001--
2	700-93-11320	・・ O-RING	1	SN:B10001--
3	700-93-11330	・・ RING {BACK-UP}	1	SN:B10001--
4	07002-13634	・・ O-RING	1	SN:B10001--
5	709-10-62101	・ VALVE ASS'Y {SUCTION AND SAFETY}	2	SN:B10001--
6	07002-03634	・・ O-RING	1	SN:B10001--
7	723-60-23800	・ VALVE ASS'Y {SUCTION}	1	SN:B10001--
8	07002-13634	・・ O-RING	1	SN:B10001--

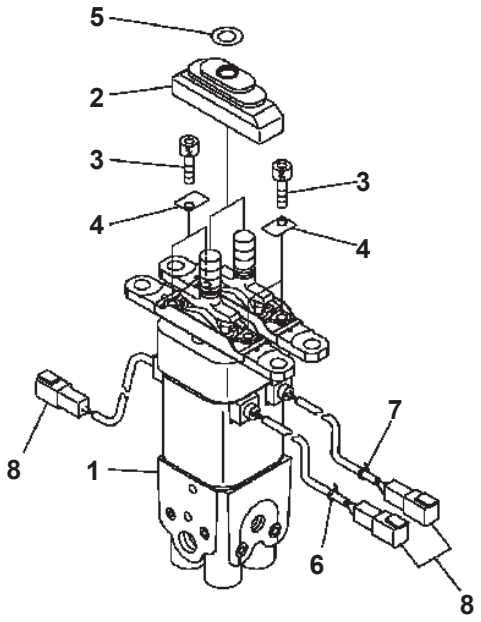

00000930

WA320-5 S/N B10001-UP

PPC VALVE (FOR 2-LEVER) (#B10001-B10228)

Item	Part No.	Description	Qty	Options
1	702-16-03812	PILOT VALVE	1	SN:B10001--B10228
2	702-16-54641	· BOOT	2	SN:B10001--B10228
3	01252-60625	· BOLT	4	SN:B10001--B10228
4	702-16-54650	· PLATE	4	SN:B10001--B10228
5	702-16-54920	· RING	2	SN:B10001--B10228
6	08034-00310	· BAND	1	SN:B10001--B10228
7	08034-20310	· BAND	1	SN:B10001--B10228
8	08192-12810	· CONNECTOR	3	SN:B10001--B10228

Ref. Y1670-01A1 Page 420490

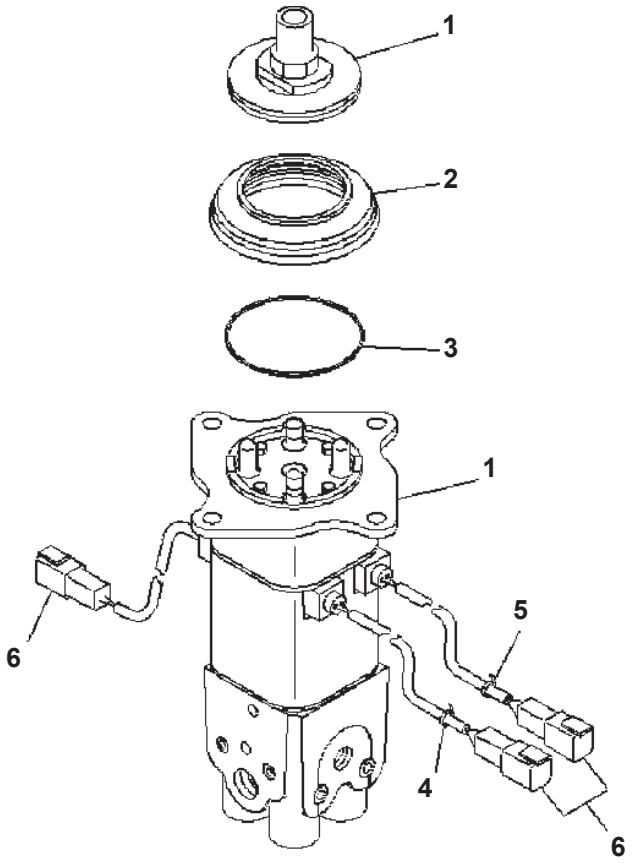

PJ5X113

PPC VALVE (FOR MONO LEVER) (#B10229-)

Item	Part No.	Description	Qty	Options
1	702-16-03851	PILOT VALVE	1	SN:B10229--
2	702-16-58820	· BOOT	1	SN:B10229--
3	07000-02070	· O-RING	1	SN:B10229--
4	08034-00310	· BAND	1	SN:B10229--
5	08034-20310	· BAND	1	SN:B10229--
6	08192-12810	· CONNECTOR	3	SN:B10229--

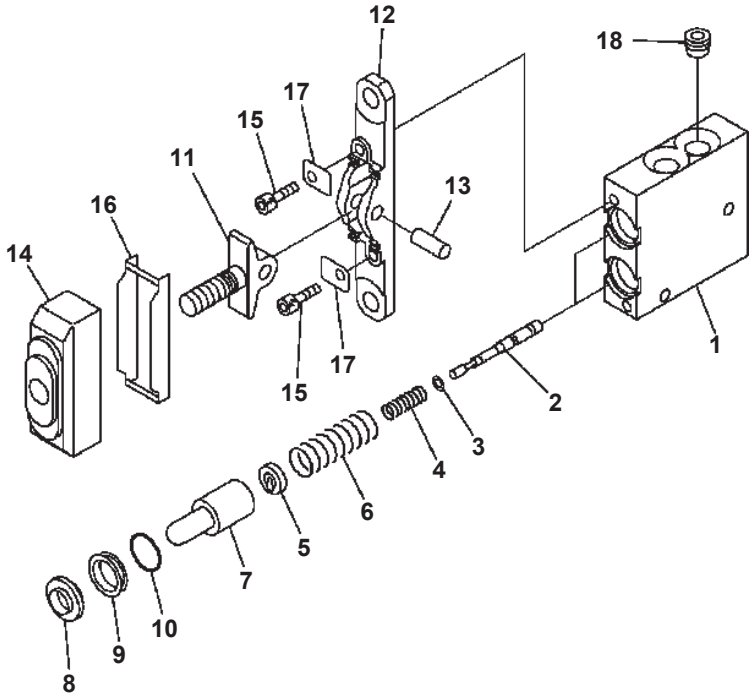

PPC VALVE (FOR ATTACHMENT)

Item	Part No.	Description	Qty	Options
	702-16-03370	PILOT VALVE	1	SN:B10001--
1	☆	· BODY {VALVE}	1	SN:B10001--
2	☆	· VALVE	2	SN:B10001--
3	702-16-51140	· SHIM¤ 0.30MM	2	SN:B10001--
	702-16-54670	· SHIM¤ 0.20MM	4	SN:B10001--
4	702-16-54550	· SPRING	2	SN:B10001--
5	702-16-54571	· RETAINER	2	SN:B10001--
6	702-16-58560	· SPRING	2	SN:B10001--
7	702-16-53170	· PISTON	2	SN:B10001--
8	702-16-57430	· SEAL	2	SN:B10001--
9	702-16-54580	· COLLAR	2	SN:B10001--
10	702-16-54590	· O-RING	2	SN:B10001--
11	☆	· LEVER	1	SN:B10001--
12	☆	· PLATE	1	SN:B10001--
13	☆	· SHAFT	1	SN:B10001--
14	702-16-54641	· BOOT	1	SN:B10001--
15	01252-30625	· BOLT	2	SN:B10001--
16	702-16-54660	· PLATE	1	SN:B10001--
17	702-16-54650	· PLATE	2	SN:B10001--
18	702-16-54880	· FILTER	1	SN:B10001--

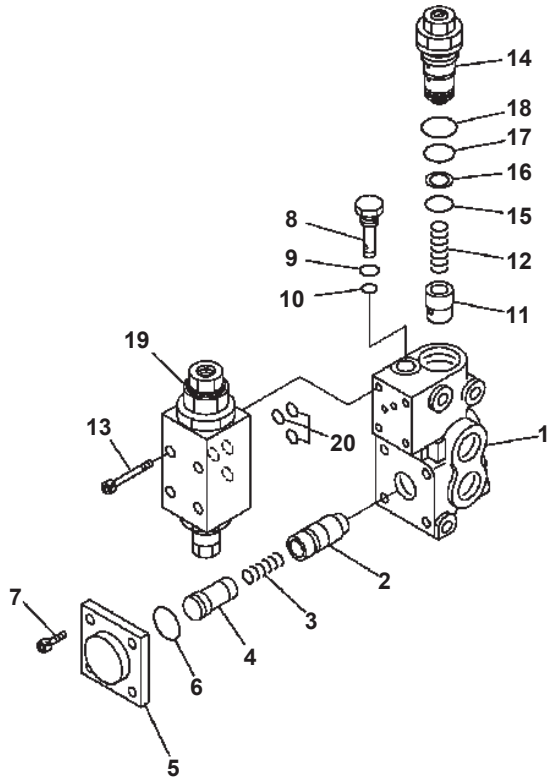

CUT-OFF VALVE

Item	Part No.	Description	Qty	Options
	702-21-04370	VALVE ASS'Y	1	SN:B10001--
1	☆	· BODY	1	SN:B10001--
2	☆	· VALVE	1	SN:B10001--
3	702-21-37220	· SPRING	1	SN:B10001--
4	☆	· PISTON	1	SN:B10001--
5	702-21-37260	· FLANGE	1	SN:B10001--
6	07000-B3032	· O-RING	1	SN:B10001--
7	01252-61025	· BOLT	4	SN:B10001--
8	702-21-37251	· SCREEN ASS'Y	1	SN:B10001--
9	07002-61423	· O-RING	1	SN:B10001--
10	07000-B1007	· O-RING	1	SN:B10001--
11	706-73-72420	· VALVE	1	SN:B10001--
12	706-73-72440	· SPRING	1	SN:B10001--
13	01252-60550	· BOLT	4	SN:B10001--
14	702-21-04390	· VALVE ASS'Y {PILOT}	1	SN:B10001--
15	07000-B2020	· · O-RING	1	SN:B10001--
16	07001-02020	· · RING {BACK-UP}	1	SN:B10001--
17	07000-B2022	· · O-RING	1	SN:B10001--
18	07002-63034	· · O-RING	1	SN:B10001--
19	702-21-04380	· VALVE ASS'Y {PILOT}	1	SN:B10001--
20	07000-B1009	· · O-RING	3	SN:B10001--

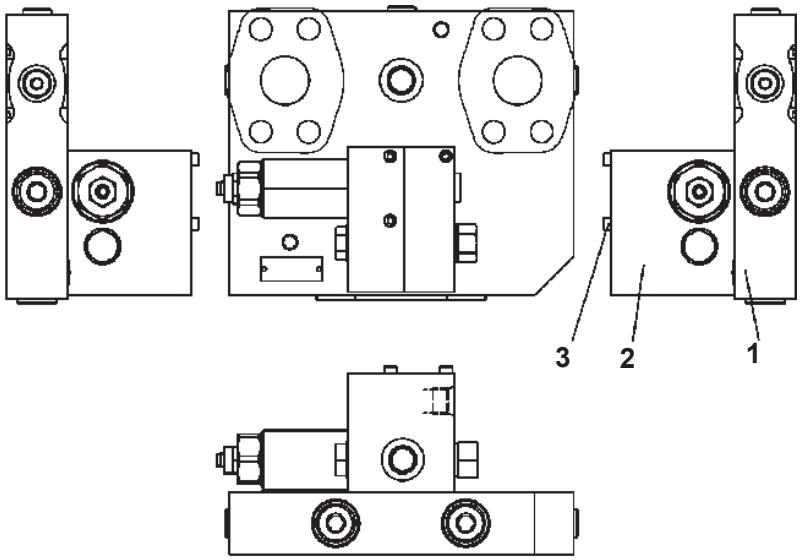

Item	Part No.	Description	Qty	Options
	419-62-31911	VALVE ASS'Y THIS ASSEMBLIES CONSIST OF ALL PARTS SHOWN IN FIGS.Y1682-01A0 TO Y1682-04A0.	1	SN:B10001--
1	(UC4100699566)	· CONTROL VALVE ASS'Y	1	SN:B10001--
2	(UC4100698141)	· VALVE BLOCK ASS'Y	1	SN:B10001--
3	UC1301526008	· BOLT {HEXAGON}	3	SN:B10001--

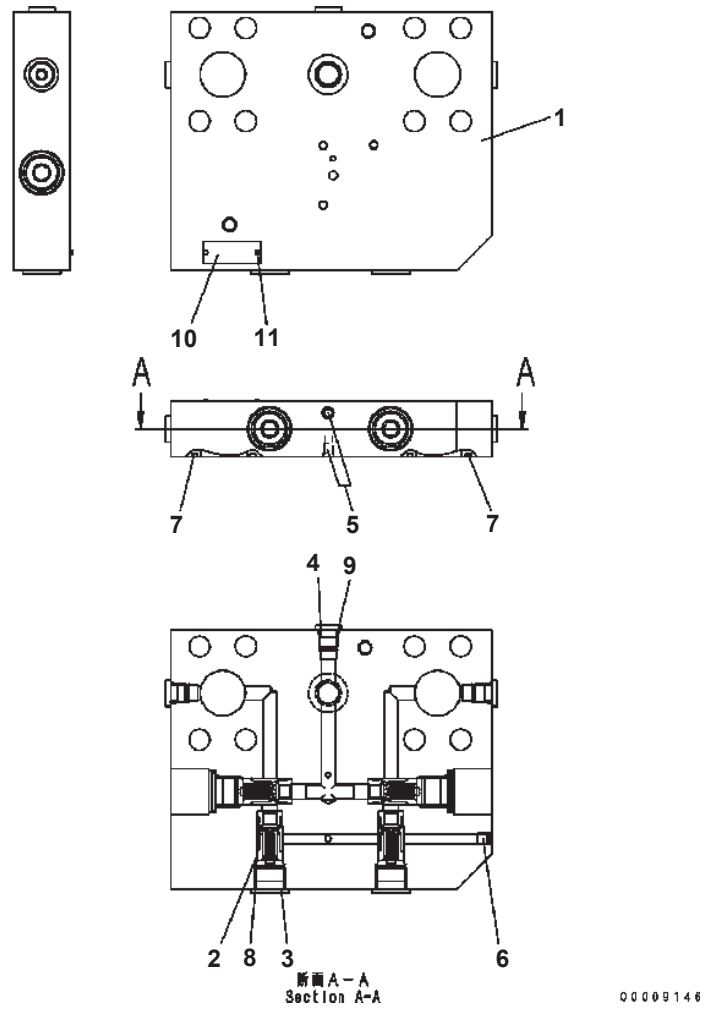

VALVE (2/4)

Item	Part No.	Description	Qty	Options
	(419-62-31911)	VALVE ASS'Y THIS ASSEMBLIES CONSIST OF ALL PARTS SHOWN IN FIGS.Y1682-01A0 TO Y1682-04A0.		SN:B10001--
	UC4100699566	CONTROL VALVE ASS'Y	1	SN:B10001--
1	☆	· BODY	1	SN:B10001--
2	(UC4803445499)	· CHECK VALVE	4	SN:B10001--
3	UC1180790006	· PLUG	4	SN:B10001--
4	UC1198273603	· PLUG	3	SN:B10001--
5	☆	· PLUG	1	SN:B10001--
6	☆	· PLUG	1	SN:B10001--
7	UC1301011001	· O-RING	2	SN:B10001--
8	UC1301190003	· O-RING	4	SN:B10001--
9	UC1301169009	· O-RING	3	SN:B10001--
10	UC1100081115	· NAME PLATE	1	SN:B10001--
11	UC1303024274	· SCREW	2	SN:B10001--

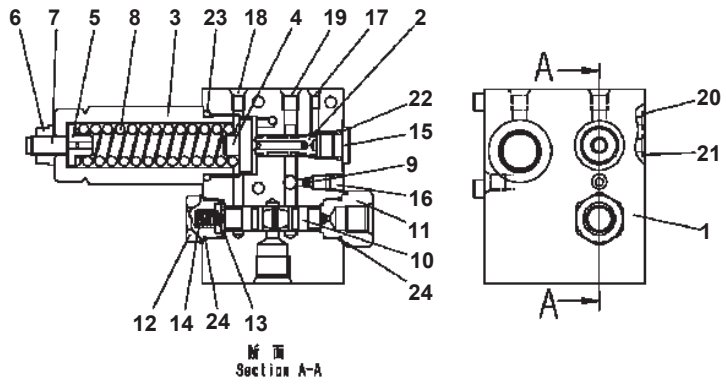

00002784

VALVE (3/4)

Item	Part No.	Description	Qty	Options
	(419-62-31911)	VALVE ASS'Y THIS ASSEMBLIES CONSIST OF ALL PARTS SHOWN IN FIGS.Y1682-01A0 TO Y1682-04A0.		SN:B10001--
	UC4100698141	・ VALVE BLOCK ASS'Y	1	SN:B10001--
1	☆	・・ BODY	1	SN:B10001--
2	☆	・・ SPOOL	1	SN:B10001--
3	UC1100693534	・・ GUIDE	1	SN:B10001--
4	UC1100393552	・・ SPRING SEAT	1	SN:B10001--
5	UC1100693561	・・ SPRING SEAT	1	SN:B10001--
6	UC1701532717	・・ NUT {HEXAGON}	1	SN:B10001--
7	UC1801721079	・・ SCREW {ADJUSTING}	1	SN:B10001--
8	UC1100693589	・・ SPRING	1	SN:B10001--
9	UC1198253902	・・ ORIFICE	1	SN:B10001--
10	☆	・・ SPOOL	1	SN:B10001--
11	UC1100693579	・・ BUSHING	1	SN:B10001--
12	UC1808107819	・・ PLUG	1	SN:B10001--
13	UC1100693617	・・ SPRING SEAT	1	SN:B10001--
14	UC1100693608	・・ SPRING	1	SN:B10001--
15	UC1198273603	・・ PLUG	1	SN:B10001--
16	UC1301891009	・・ PLUG	1	SN:B10001--
17	☆	・・ PLUG	1	SN:B10001--
18	☆	・・ PLUG	1	SN:B10001--
19	☆	・・ PLUG	2	SN:B10001--
20	UC1300022009	・・ O-RING	1	SN:B10001--
21	UC1300026002	・・ O-RING	1	SN:B10001--
22	UC1301169009	・・ O-RING	1	SN:B10001--
23	UC1301220003	・・ O-RING	1	SN:B10001--
24	UC1800011702	・・ O-RING	2	SN:B10001--

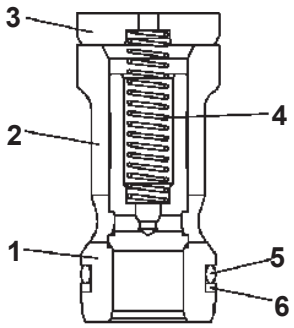

00002785

VALVE (4/4)

Item	Part No.	Description	Qty	Options
	(419-62-31911)	VALVE ASS'Y THIS ASSEMBLIES CONSIST OF ALL PARTS SHOWN IN FIGS.Y1682-01A0 TO Y1682-04A0.		SN:B10001--
	UC4803445499	・ CHECK VALVE	1	SN:B10001--
1	UC1006973554	・・ VALVE SEAT	1	SN:B10001--
2	UC1001811891	・・ POPPET	1	SN:B10001--
3	UC1001919353	・・ SPRING SEAT	1	SN:B10001--
4	UC1000131671	・・ SPRING	1	SN:B10001--
5	UC1000090992	・・ O-RING	1	SN:B10001--
6	UC1800131659	・・ BACK-UP RING	1	SN:B10001--

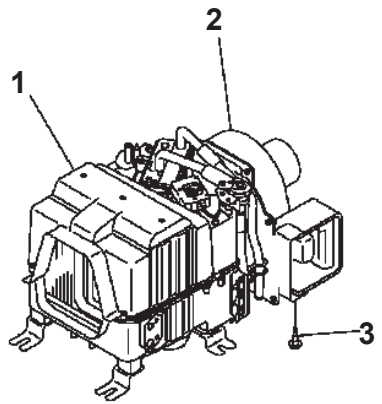

PJ0F572

AIR CONDITIONER UNIT (INNER PARTS)

Item	Part No.	Description	Qty	Options
	425-07-21111	AIR CONDITIONER U.	1	SN:B10001--
1	(ND445800-9182)	· AIR CONDITIONER U.	1	SN:B10001--
2	(ND116300-4631)	· BLOWER ASS'Y	1	SN:B10001--
3	ND90930-06141	· SCREW	5	SN:B10001--

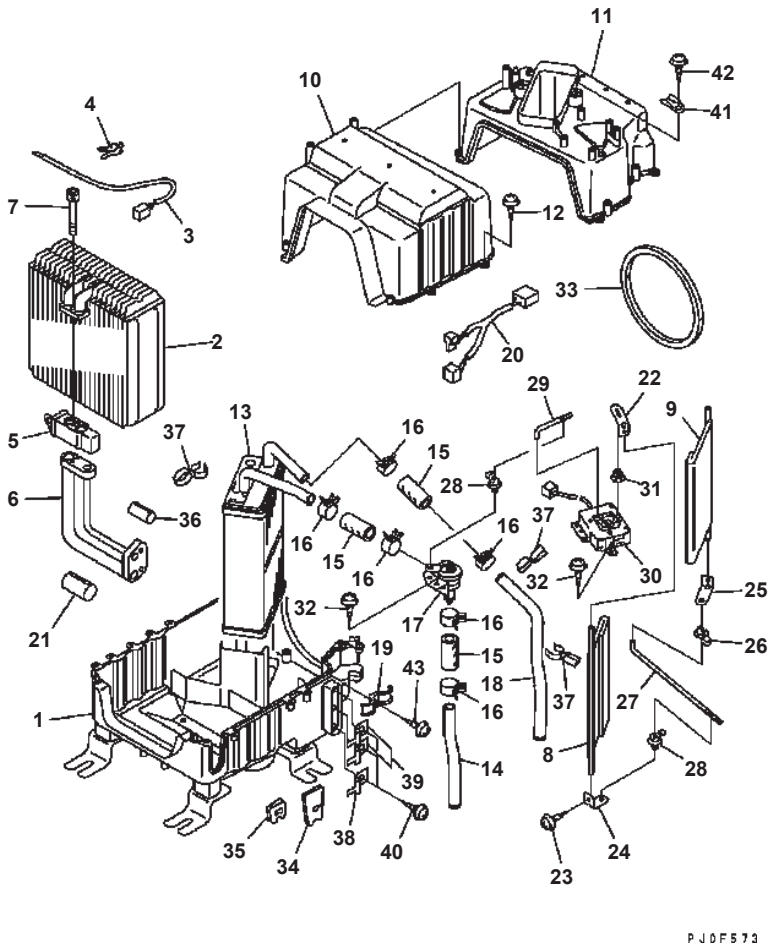

AIR CONDITIONER UNIT (1/2) COOLING (INNER PARTS)

Item	Part No.	Description	Qty	Options
	(425-07-21111)	AIR CONDITIONER U.	1	SN:B10001--
	ND445800-9182	· AIR CONDITIONER U.	1	SN:B10001--
1	ND245420-4202	· · CASE	1	SN:B10001--
2	ND447600-2340	· · EVAPORATOR	1	SN:B10001--
3	ND077500-3620	· · THERMOSTAT	1	SN:B10001--
4	ND246690-2840	· · CLAMP	1	SN:B10001--
5	ND447500-1390	· · VALVE	1	SN:B10001--
6	ND446870-2320	· · TUBE	1	SN:B10001--
	ND949142-0030	· · · O-RING	1	SN:B10001--
	ND949142-0010	· · · O-RING	1	SN:B10001--
7	ND949046-2150	· · BOLT	2	SN:B10001--
8	ND116730-0520	· · DAMPER ASS'Y	1	SN:B10001--
9	ND116730-0530	· · DAMPER ASS'Y	1	SN:B10001--
10	ND245420-5992	· · CASE	1	SN:B10001--
11	ND116452-0562	· · CASE	1	SN:B10001--
12	ND949001-1730	· · SCREW	11	SN:B10001--
13	ND116410-9680	· · UNIT ASS'Y	1	SN:B10001--
14	ND116427-5540	· · PIPE	1	SN:B10001--
15	ND7052-200600	· · HOSE	3	SN:B10001--
16	ND949351-0860	· · CLIP	6	SN:B10001--
17	ND113600-9260	· · VALVE ASS'Y	1	SN:B10001--
18	ND116427-2320	· · PIPE	1	SN:B10001--
19	ND017231-1400	· · CLAMP	1	SN:B10001--
20	ND246440-5200	· · WIRING HARNESS	1	SN:B10001--
21	ND7009-040050	· · PIPE	1	SN:B10001--
22	ND017732-3051	· · LEVER	1	SN:B10001--
23	ND91370-03081	· · SCREW	3	SN:B10001--
24	ND017732-3041	· · LEVER	1	SN:B10001--
25	ND017732-3060	· · LEVER	1	SN:B10001--
26	17M-911-3330	· · BUSHING	2	SN:B10001--
27	ND116662-3780	· · SHAFT	1	SN:B10001--
28	17M-911-3290	· · CLAMP	2	SN:B10001--
29	ND116662-0590	· · SHAFT	1	SN:B10001--
30	ND063700-6580	· · SERVO MOTOR ASS'Y	1	SN:B10001--
31	195-Z11-6280	· · BUSHING	1	SN:B10001--
32	ND90930-06141	· · SCREW	6	SN:B10001--
33	ND146668-6710	· · PACKING	1	SN:B10001--
34	ND146984-4750	· · GROMMET	1	SN:B10001--
35	ND146642-7930	· · PLATE	1	SN:B10001--
36	ND7009-010050	· · PIPE	1	SN:B10001--

WA320-5 S/N B10001-UP

AIR CONDITIONER UNIT (1/2) COOLING (INNER PARTS)

Item	Part No.	Description	Qty	Options
37	ND246690-6740	・・ CLAMP	3	SN:B10001--
38	ND017773-0140	・・ CLIP	1	SN:B10001--
39	ND017773-0180	・・ CLIP	2	SN:B10001--
40	ND949008-0780	・・ SCREW	3	SN:B10001--
41	ND017660-3490	・・ BRACKET	2	SN:B10001--
42	ND90930-05121	・・ SCREW	2	SN:B10001--
43	ND90930-05161	・・ SCREW	1	SN:B10001--

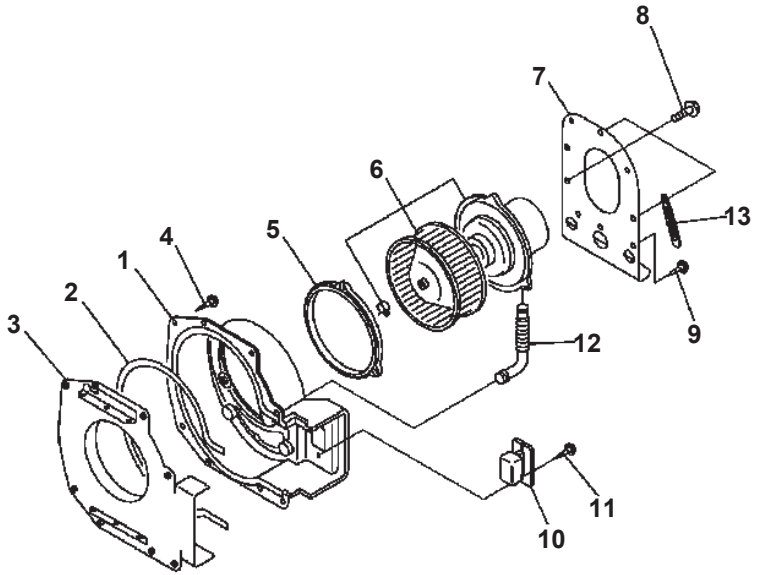

AIR CONDITIONER UNIT (2/2) BLOWER (INNER PARTS)

Item	Part No.	Description	Qty	Options
	(425-07-21111)	AIR CONDITIONER U.	1	SN:B10001--
	ND116300-4631	· BLOWER ASS'Y	1	SN:B10001--
1	ND116251-9193	· · CASE	1	SN:B10001--
2	ND146638-9460	· · PACKING	1	SN:B10001--
3	ND116290-0790	· · SUB ASS'Y	1	SN:B10001--
4	ND949001-2690	· · SCREW	8	SN:B10001--
5	ND146622-6880	· · PACKING	1	SN:B10001--
6	ND116340-2360	· · MOTOR ASS'Y	1	SN:B10001--
	ND116221-0960	· · · FAN	1	SN:B10001--
	ND017231-2370	· · · CLAMP	1	SN:B10001--
7	ND116471-7271	· · BRACKET	1	SN:B10001--
8	ND949047-2370	· · BOLT	3	SN:B10001--
9	ND90930-06141	· · SCREW	3	SN:B10001--
10	ND146810-9062	· · RESISTOR {BLOWER}	1	SN:B10001--
11	ND90930-04121	· · SCREW	2	SN:B10001--
12	ND146651-1840	· · PIPE	1	SN:B10001--
13	195-Z11-6150	· · CLAMP	1	SN:B10001--

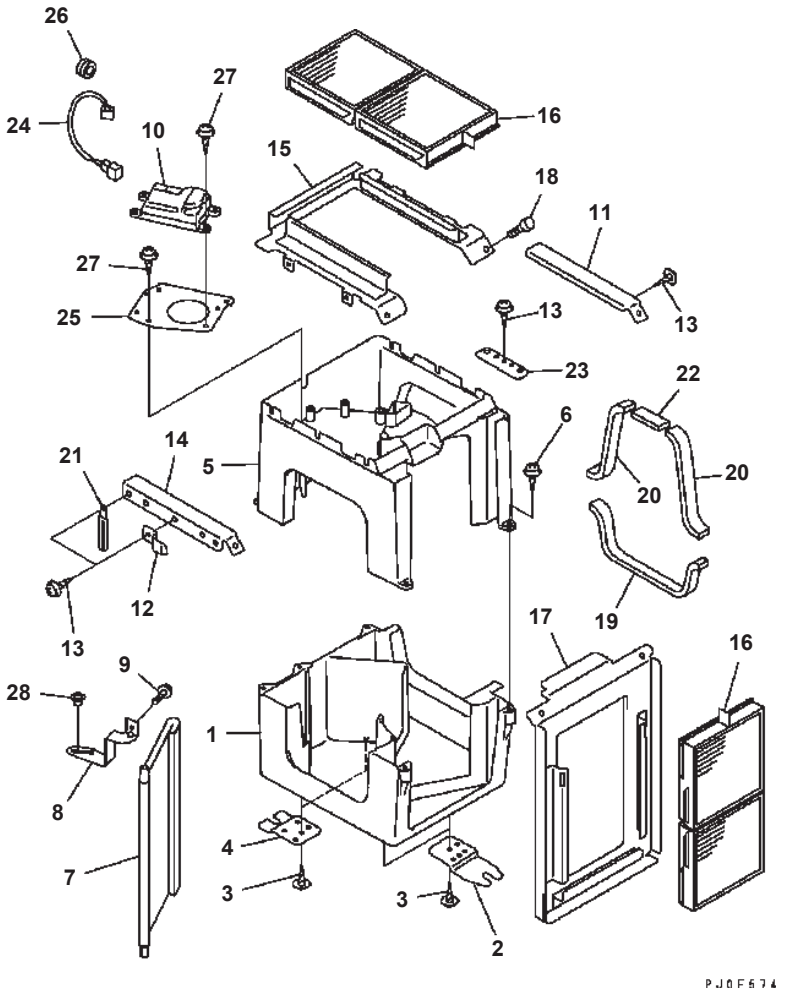

DAMPER (INNER PARTS)

Item	Part No.	Description	Qty	Options
	421-07-31260	DAMPER ASS'Y	1	SN:B10001--
1	ND017321-2132	· CASE {AIR DAMPER}	1	SN:B10001--
2	ND116471-7180	· BRACKET {CASE}	2	SN:B10001--
3	ND90930-06161	· SCREW	12	SN:B10001--
4	ND116471-7190	· BRACKET {CASE}	2	SN:B10001--
5	ND017321-3071	· CASE {AIR DAMPER}	1	SN:B10001--
6	ND90900-04161	· SCREW	5	SN:B10001--
7	ND116730-0710	· DAMPER ASS'Y	1	SN:B10001--
8	ND017732-4880	· LEVER	1	SN:B10001--
9	ND91370-03081	· SCREW	1	SN:B10001--
10	ND063700-5731	· SERVO MOTOR ASS'Y	1	SN:B10001--
11	ND116471-6662	· BRACKET	1	SN:B10001--
12	ND017773-0190	· CLIP	1	SN:B10001--
13	ND90940-05101	· SCREW	11	SN:B10001--
14	ND116471-6662	· BRACKET	1	SN:B10001--
15	ND145530-0620	· COVER	1	SN:B10001--
16	ND014520-0990	· FILTER ASS'Y	2	SN:B10001--
17	ND145530-0630	· BRACKET	1	SN:B10001--
18	ND91370-06161	· SCREW	2	SN:B10001--
19	ND146648-1171	· PACKING	1	SN:B10001--
20	ND146637-0480	· PACKING	2	SN:B10001--
21	ND017231-0670	· CLAMP	1	SN:B10001--
22	ND146648-6791	· PACKING	1	SN:B10001--
23	ND246634-8580	· BRACKET	1	SN:B10001--
24	ND246451-0200	· WIRE	1	SN:B10001--
25	ND146522-6190	· BRACKET	1	SN:B10001--
26	ND146984-4030	· GROMMET	1	SN:B10001--
27	ND90940-05161	· SCREW	6	SN:B10001--
28	195-Z11-6280	· BUSHING	1	SN:B10001--

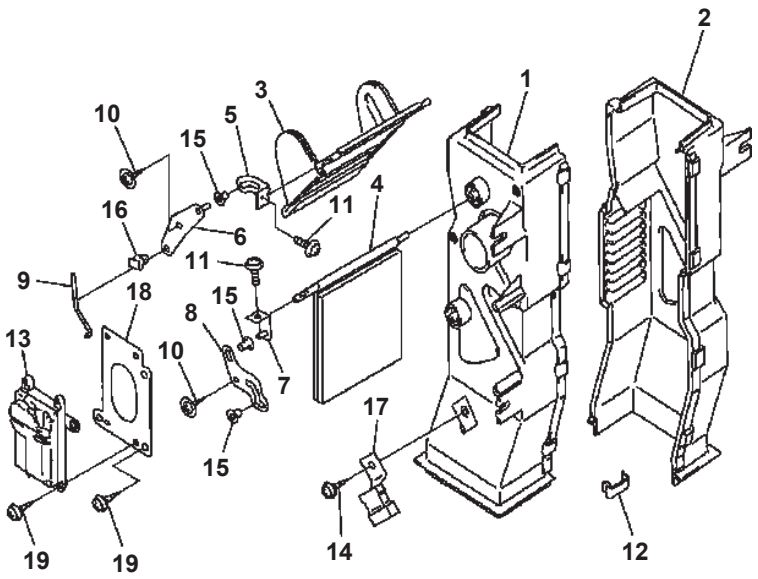

AIR DUCT (INNER PARTS)

Item	Part No.	Description	Qty	Options
	425-07-21152	DUCT ASS'Y {AIR}	2	SN:B10001--
1	ND145820-9610	· DUCT {AIR}	1	SN:B10001--
2	ND145820-8330	· DUCT {AIR}	1	SN:B10001--
3	ND116530-8560	· DAMPER ASS'Y	1	SN:B10001--
4	ND116530-8570	· DAMPER ASS'Y	1	SN:B10001--
5	ND017732-3080	· LEVER {CONTROL}	1	SN:B10001--
6	ND017732-3090	· LEVER {CONTROL}	1	SN:B10001--
7	ND017732-3100	· LEVER {CONTROL}	1	SN:B10001--
8	ND017732-5020	· LEVER {CONTROL}	1	SN:B10001--
9	ND116662-0640	· SHAFT	1	SN:B10001--
10	ND949008-0420	· SCREW {TAPPING}	2	SN:B10001--
11	ND913100-3081	· SCREW {WITH WASHER}	2	SN:B10001--
12	ND116632-0171	· SPRING {HOLDING}	8	SN:B10001--
13	ND063700-7010	· SERVO MOTOR ASS'Y	1	SN:B10001--
14	ND949008-0780	· SCREW {TAPPING}	1	SN:B10001--
15	ND146625-2630	· BUSHING	3	SN:B10001--
16	ND246690-2930	· CLAMP	1	SN:B10001--
17	ND017773-0140	· CLIP	1	SN:B10001--
18	ND146522-6181	· BRACKET	1	SN:B10001--
19	ND909400-5161	· SCREW {TAPPING}	6	SN:B10001--

NUMERICAL INDEX

PARTS Nº	FIG. Nº	INDEX	PAGE
6735-11-1201	A1009-01A4	1	030010
6736-11-1150	A1009-01A4	2	030010
6732-11-1930	A1009-01A4	3	030010
6732-11-1910	A1009-01A4	4	030010
6736-41-4110	A1009-01A4	5	030010
6732-41-4520	A1009-01A4	6	030010
6736-41-4210	A1009-01A4	7	030010
6732-41-4520	A1009-01A4	8	030010
6732-41-4430	A1009-01A4	9	030010
6731-41-4510	A1009-01A4	10	030010
6732-41-4540	A1009-01A4	11	030010
6732-11-1920	A1009-01A4	12	030010
6732-11-1610	A1009-01A4	13	030010
6732-11-1620	A1009-01A4	14	030010
6735-11-1821	A1009-01A4	15	030010
6732-11-1170	A1009-01A4	16	030010
6732-11-1180	A1009-01A4	17	030010
6736-19-1310	A1009-01A4	18	030010
6736-19-1410	A1009-01A4	19	030010
6736-18-1310	A1009-01A4	20	030010
6732-11-1710	A1050-01A0	1	030020
6732-11-1720	A1050-01A0	2	030020
6732-11-8130	A111P-01A3	1	030030
6735-11-8120	A111P-01A3	2	030030
6732-11-8181	A111P-01A3	3	030030
6732-11-8210	A111P-01A3	4	030030
6732-11-8150	A111P-01A3	5	030030
6738-11-4430	A131P-01A8	1	030040
6732-11-1920	A131P-01A8	2	030040
6732-11-4812	A131P-01A8	3	030040
6732-11-4170	A131P-01A8	4	030040
6732-11-4150	A131P-01A8	5	030040
6754-81-5110	A131R-01A0	1	030050
6743-82-4110	A131R-01A0	1	030050
6754-11-4120	A131R-01A0	2	030050
6732-11-1910	A131V-01A0	1	030060
6735-11-4110	A131V-01A0	2	030060
6735-11-4811	A131V-01A0	3	030060
6732-11-4160	A131V-01A0	4	030060
6732-81-8220	A151R-01A0	1	030070
6736-11-5820	A151T-01A2	1	030080
6732-11-5530	A151T-01A2	2	030080
6735-11-5220	A151V-01A2	1	030090
07042-00108	A151V-01A2	2	030090
6736-21-6110	A153T-01C6	1	030100
6732-51-8480	A153T-01C6	2	030100
6732-71-3220	A153T-01C6	3	030100
6736-51-8130	A153T-01C6	4	030100
6736-51-8710	A153T-01C6	5	030100
6736-51-8140	A153T-01C6	6	030100
6735-21-5530	A153T-01C6	7	030100
6736-51-8730	A153T-01C6	8	030100
6735-51-8180	A153T-01C6	9	030100
6734-71-5170	A153T-01C6	10	030100
6731-51-8150	A153T-01C6	11	030100
6731-51-8170	A153T-01C6	12	030100
6731-51-8190	A153T-01C6	13	030100
6732-51-8430	A153T-01C6A	1	030105
6732-71-3220	A153T-01C6A	2	030105
6735-51-8180	A153T-01C6A	3	030105
6732-51-8330	A153T-01C6A	4	030105
6735-51-8140	A153T-01C6A	5	030105
6736-51-8710	A153T-01C6A	6	030105
6745-61-8160	A153T-01C6A	7	030105
6732-81-8860	A153T-01C6A	8	030105
6732-51-8441	A153T-01C6A	9	030105
6732-81-8860	A153T-01C6A	13	030105
6737-51-8770	A153T-01C6A	14	030105
6738-11-4320	A153V-01A0	1	030110
07043-70108	A153V-01A0	2	030110
6738-11-4370	A153V-01A0	3	030110
6738-11-4380	A153V-01A0	4	030110
6738-11-4390	A153V-01A0	5	030110
6738-82-8810	A1539-01B9	1	030120
6732-81-8820	A1539-01B9	2	030120
6736-82-8020	A1539-01B9	3	030120
6732-81-8830	A1539-01B9	4	030120
6736-82-8020	A1539-01C0	1	030130
6732-81-8830	A1539-01C0	1	030130
6736-81-8370	A1539-01C0	2	030130
6731-82-8210	A1539-01C0	3	030130
6733-81-8650	A1539-01C0	4	030130
6736-81-8480	A1539-01C0	5	030130
6736-81-8430	A1539-01C0	6	030130
6736-81-8280	A1539-01C0	7	030130
6733-81-8360	A1539-01C0	8	030130
6736-81-8470	A1539-01C0	9	030130
6733-81-8330	A1539-01C0	10	030130
6732-81-8140	A1539-01C0	11	030130
6743-82-8610	A1539-01C0	13	030130
6733-81-8370	A1539-01C0	14	030130
6733-81-8460	A1539-01C0	15	030130
6733-81-8380	A1539-01C0	16	030130
6733-81-8270	A1539-01C0	17	030130
6733-81-8260	A1539-01C0	18	030130
6733-81-6850	A1539-01C0	20	030130
6735-81-6810	A1539-01C0	21	030130
6735-82-8220	A1539-01C0	22	030130
6735-81-8620	A1539-01C0	23	030130
6742-01-5569	A1539-01C0	24	030130
6738-82-8820	A1539-01C0	25	030130
6733-81-8480	A1539-01C0	26	030130
6736-81-8390	A1539-01C0	28	030130
6735-81-8370	A1539-01C0	29	030130
6735-81-8310	A1539-01C0	31	030130
6735-81-8490	A1539-01C0	32	030130
6733-51-8110	A1539-01C0	33	030130
6742-01-5564	A1539-01C0	34	030130
6733-81-8320	A1539-01C0	35	030130
6736-81-8440	A1539-01C0	38	030130
6736-81-8320	A1539-01C0	39	030130
6736-81-8380	A1539-01C0	40	030130
6736-81-8360	A1539-01C0	41	030130
6743-82-8140	A1539-01C0	42	030130
6732-61-6140	A173P-01B0	1	030140
6732-61-6180	A173P-01B0	2	030140
6735-11-1910	A173P-01B0	3	030140
6732-61-6310	A173P-01B0	4	030140
6732-61-6250	A173P-01B0	5	030140
6732-61-6240	A173P-01B0	6	030140
6732-61-6330	A173P-01B0	7	030140
6732-61-6270	A173P-01B0	8	030140
6732-61-6190	A173P-01B0	9	030140
6732-61-6170	A173P-01B0	10	030140
6735-61-6471	A173R-01A0	1	030150
08073-20505	A201V-01A2Z	1	030160
6738-81-3170	A201V-01A2Z	2	030160
6215-81-9710	A201V-01A2Z	3	030160
6731-21-1270	A2019-01A2	1	030170
6732-21-1411	A2019-01A2	2	030170
6732-21-1611	A2019-01A2	3	030170
6731-21-1260	A2019-01A2	4	030170
6736-21-1810	A2019-01A2	5	030170
6736-21-1820	A2019-01A2	6	030170
6732-21-1810	A2019-01A2	7	030170
6732-21-1910	A2019-01A2	8	030170
6731-21-1210	A2019-01A2	9	030170
6732-21-6140	A2019-01A2	9	030170
6731-21-1190	A2019-01A2	10	030170
6732-21-6130	A2019-01A2	11	030170
6732-21-6120	A2019-01A2	12	030170
6732-11-1910	A2019-01A2	13	030170
6732-21-1960	A2019-01A2	14	030170
6735-21-5530	A2019-01A2	15	030170
6732-21-1910	A2019-01A2	16	030170
6732-21-5530	A2019-01A2	17	030170
6732-21-6160	A2019-01A2	18	030170
6732-11-1920	A2019-01A2	19	030170
6735-21-1910	A2019-01A2	20	030170
6735-21-1940	A2019-01A2	21	030170

PARTS Nº	FIG. Nº	INDEX	PAGE
6732-21-3120	A2019-01A2	22	030170
6732-21-1930	A2019-01A2	22	030170
6736-29-1410	A2019-01A2	2	030170
6736-29-1420	A2019-01A2	2	030170
6732-21-1260	A2019-01A2	4	030170
6736-29-2110	A2019-01A2	23	030170
6731-81-8710	A204R-01A0	1	030180
01643-30823	A2049-01A1	1	030190
6732-21-3990	A2049-01A1	2	030190
6738-22-3110	A2049-01A1	3	030190
6736-21-3210	A2049-01A1	3	030190
6732-21-3160	A2049-01A1	4	030190
6732-21-3140	A2049-01A1	5	030190
6732-21-3150	A2049-01A1	6	030190
6732-21-3870	A2049-01A1	7	030190
6732-21-3180	A2049-01A1	8	030190
6732-21-3880	A2049-01A1	9	030190
6736-21-5310	A2049-01A1	10	030190
6742-01-0540	A2049-01A1	11	030190
6735-21-3140	A2049-01A1	12	030190
6736-21-3310	A2049-01A1	12	030190
6732-21-3511	A2049-01A1	13	030190
6732-21-3812	A2049-01A1	14	030190
6738-21-3110	A2049-01A1	15	030190
6732-11-8210	A206P-01A7	1	030200
6732-11-8150	A206P-01A7	2	030200
6738-21-6280	A206P-01A7	3	030200
6738-21-6100	A206P-01A7	4	030200
6738-21-7710	A206P-01A7	5	030200
6738-21-7780	A206P-01A7	6	030200
01435-00616	A206P-01A7	7	030200
01640-20610	A206P-01A7	8	030200
6738-21-7810	A206P-01A7	9	030200
6738-21-6620	A206P-01A7	10	030200
6738-21-6650	A206P-01A7	11	030200
6738-21-6660	A206P-01A7	12	030200
6738-21-6670	A206P-01A7	13	030200
6732-71-3220	A206P-01A7	14	030200
6738-21-6180	A206P-01A7	15	030200
6738-21-6680	A206P-01A7	16	030200
6738-22-7810	A2060-01B5	1	030210
6735-21-6130	A2060-01B5	2	030210
6136-21-7120	A207S-01A0	1	030220
6732-51-5130	A207S-01A0	2	030220
6736-21-3360	A207S-01A0	3	030220
6738-21-5130	A207S-01A0	4	030220
6738-21-5120	A207S-01A0	5	030220
01435-01020	A207S-01A0	6	030220
6736-21-5310	A207S-01A0	7	030220
6732-21-6610	A211R-01A2	1	030230
6732-21-5160	A211R-01A2	2	030230
6732-21-6630	A211R-01A2	3	030230
6741-81-9220	A2110-01D6	1	030240
6733-71-5680	A2110-01D6	2	030240
08193-20010	A2110-01D6	3	030240
6732-21-3120	A2110-01D6	4	030240
6738-82-5810	A2110-01D6	5	030240
6738-21-5610	A2119-01B5	1	030250
07005-02216	A2119-01B5	2	030250
6735-21-5140	A2119-01B7	1	030260
6732-21-5270	A2119-01B7	2	030260
6735-21-5531	A2119-01B7	3	030260
6732-71-3220	A2119-01B7	4	030260
6732-21-5170	A2119-01B7	5	030260
6736-21-5320	A2119-01B7	6	030260
6733-21-5521	A2119-01B7	7	030260
09920-00150	A2119-01B7	8	030260
6732-21-5530	A219P-01A6	1	030270
6732-21-5480	A219P-01A6	2	030270
6735-21-5170	A219P-01A6	3	030270
6738-22-4710	A2219-01B4	1	030280
6732-11-1920	A2219-01B4	2	030280
6738-22-5110	A2219-01B4	3	030280
6732-21-4161	A2219-01B4	4	030280
6732-21-4290	A2219-01B4	5	030280
6735-21-4191	A2219-01B4	6	030280
6732-21-4120	A2219-01B4	7	030280
6732-21-5160	A2219-01B4	8	030280
6732-21-4130	A2219-01B4	9	030280
6732-21-4150	A2219-01B4	10	030280
6735-K2-3001	A2219-01B4	10	030280
6731-21-6231	A2219-01B4	12	030280
6732-22-4170	A2219-01B4	13	030280
6732-21-4220	A2219-01B4	14	030280
6735-21-4250	A2219-01B4	15	030280
6732-22-4210	A2219-01B4	16	030280
6742-01-5158	A2219-01B4	17	030280
6735-61-2140	A2219-01B4	18	030280
09920-00150	A2219-01B4	19	030280
6738-31-4400	A223P-01C2	1	030290
6732-31-4180	A223P-01C2	1	030290
6732-31-4120	A223P-01C2	3	030290
6732-31-4130	A223P-01C2	4	030290
6736-31-1100	A2319-01A0	1	030300
6732-31-1211	A2319-01A0	2	030300
6732-21-6150	A2319-01A0	3	030300
6754-22-8110	A2319-01A0	4	030300
6735-21-8100	A2319-01A0	4	030300
6735-21-8110	A2319-01A0	4	030300
6732-21-8180	A2319-01A0	5	030300
6742-01-4060	A2319-01A0	5	030300
6735-21-8210	A2319-01A0	6	030300
6736-29-8100	A2319-01A0	4	030300
6735-29-8110	A2319-01A0	4	030300
6736-28-8100	A2319-01A0	4	030300
6735-28-8110	A2319-01A0	4	030300
6736-27-8100	A2319-01A0	4	030300
6735-27-8110	A2319-01A0	4	030300
6736-26-8100	A2319-01A0	4	030300
6735-26-8110	A2319-01A0	4	030300
6735-28-8200	A2319-01A0	5	030300
6731-21-8610	A2319-01A0	5	030300
6736-27-8620	A2319-01A0	5	030300
6731-21-8620	A2319-01A0	5	030300
6736-39-1221	A2319-01A0	7	030300
6736-39-1140	A2319-01A0	8	030300
6732-31-8120	A223P-01A0	1	030310
6735-31-8120	A223P-01A0	2	030310
6737-32-3110	A2359-01A2	1	030320
6732-31-3132	A2359-01A2	2	030320
6732-31-3320	A2359-01A2	3	030320
6754-32-3410	A2359-01A2	4	030320
6732-31-3411	A2359-01A2	5	030320
6732-31-3420	A2359-01A2	5	030320
6738-32-2010	A2359-01A2	6	030320
6732-31-2420	A2359-01A2	7	030320
6738-31-2030	A2359-01A2	8	030320
6731-31-2410	A2359-01A2	9	030320
6754-32-3420	A2359-01A2	4	030320
6736-39-3400	A2359-01A2	4	030320
6754-32-3430	A2359-01A2	4	030320
6736-38-3400	A2359-01A2	4	030320
6754-32-3440	A2359-01A2	4	030320
6736-37-3400	A2359-01A2	4	030320
6754-32-3450	A2359-01A2	4	030320
6736-36-3400	A2359-01A2	4	030320
6738-39-3400	A2359-01A2	5	030320
6738-38-3400	A2359-01A2	5	030320
6738-37-3400	A2359-01A2	5	030320
6738-36-3400	A2359-01A2	5	030320
6738-32-2020	A2359-01A2	6	030320
6732-31-2420	A2359-01A2	7	030320
6738-39-2030	A2359-01A2	8	030320
6738-32-2030	A2359-01A2	6	030320
6732-31-2420	A2359-01A2	7	030320
6738-38-2030	A2359-01A2	8	030320
6732-41-3111	A241P-01A0	1	030330
6732-41-5180	A241P-01A0	2	030330
6732-11-1640	A241P-01A0	3	030330
6732-41-5170	A241P-01A0	4	030330

PARTS Nº	FIG. Nº	INDEX	PAGE
6732-41-5160	A241P-01A0	5	030330
6732-41-5400	A241P-01A0	6	030330
6735-41-5550	A241P-01A0	8	030330
6735-41-5560	A241P-01A0	9	030330
6732-41-5200	A241P-01A0	10	030330
6735-41-5550	A241P-01A0	12	030330
6735-41-5560	A241P-01A0	13	030330
6736-41-5110	A241P-01A0	14	030330
6732-41-5120	A241P-01A0	14	030330
6732-41-2112	A241R-01A0	1	030340
6735-41-1111	A2419-01A0	1	030350
6732-41-1231	A2419-01A0	2	030350
6732-41-1280	A2419-01A0	3	030350
6732-41-1220	A2419-01A0	4	030350
6732-41-1260	A2419-01A0	5	030350
6732-21-3380	A261P-01A1	1	030360
6732-21-9310	A261P-01A1	2	030360
6732-51-5130	A261P-01A1	3	030360
6731-91-1550	A267P-01A2Z	1	030370
6732-21-3190	A281P-01A0	1	030380
6732-21-3220	A281P-01A0	2	030380
6735-21-5151	A283P-01A0	1	030390
09920-00150	A283P-01A0	2	030390
6735-51-1120	A301P-01A2	1	030400
6738-51-1100	A301P-01A2	2	030400
6732-11-1930	A331P-01B2	1	030410
6735-61-2140	A331P-01B2	2	030410
6738-51-5110	A331P-01B2	3	030410
6736-61-5180	A331P-01B2	3	030410
6738-51-5120	A331P-01B2	4	030410
6735-61-2160	A331P-01B2	5	030410
6735-61-2190	A331P-01B2	6	030410
6732-51-4420	A331P-01B2	7	030410
6731-61-2151	A331P-01B2	8	030410
6732-51-4432	A331P-01B2	9	030410
6735-61-2110	A331P-01B2	10	030410
6732-61-2312	A331P-01B2	11	030410
6732-61-6140	A331P-01B2	12	030410
6736-51-5142	A331P-01B2	13	030410
6738-71-1150	A401P-01H6	1	030420
6738-71-1150	A401P-02H6	1	030430
DK101062-9340	A401P-02H6	1	030430
DK131073-9120	A401P-02H6	1	030430
DK029040-6020	A401P-02H6	2	030430
DK134026-0000	A401P-02H6	3	030430
DK131002-2000	A401P-02H6	4	030430
DK131028-6020	A401P-02H6	5	030430
DK131011-0800	A401P-02H6	6	030430
DK131017-1000	A401P-02H6	7	030430
DK029340-6020	A401P-02H6	8	030430
DK139206-0400	A401P-02H6	9	030430
DK029633-1010	A401P-02H6	10	030430
DK131371-4900	A401P-02H6	11	030430
DK016630-2030	A401P-02H6	12	030430
DK028201-7020	A401P-02H6	12	030430
DK016640-2030	A401P-02H6	13	030430
DK028202-0020	A401P-02H6	13	030430
DK131302-1300	A401P-02H6	14	030430
DK131302-1700	A401P-02H6	15	030430
DK029312-0310	A401P-02H6	16	030430
DK029312-0320	A401P-02H6	16	030430
DK029312-0330	A401P-02H6	16	030430
DK029312-0340	A401P-02H6	16	030430
DK029312-0350	A401P-02H6	16	030430
DK029312-0360	A401P-02H6	16	030430
DK029312-0370	A401P-02H6	16	030430
DK029312-0380	A401P-02H6	16	030430
DK029311-7010	A401P-02H6	17	030430
DK029311-7020	A401P-02H6	17	030430
DK029311-7030	A401P-02H6	17	030430
DK029311-7040	A401P-02H6	17	030430
DK029311-7050	A401P-02H6	17	030430
DK029311-7090	A401P-02H6	17	030430
DK029311-7060	A401P-02H6	17	030430
DK029311-7210	A401P-02H6	17	030430
DK029311-7070	A401P-02H6	17	030430
DK029311-7220	A401P-02H6	17	030430
DK139417-0000	A401P-02H6	17	030430
DK131306-1000	A401P-02H6	18	030430
DK029050-5010	A401P-02H6	19	030430
DK026505-0940	A401P-02H6	20	030430
DK029622-0190	A401P-02H6	21	030430
DK131330-6400	A401P-02H6	22	030430
DK029010-6810	A401P-02H6	23	030430
DK131321-1900	A401P-02H6	24	030430
DK131424-3420	A401P-02H6	25	030430
DK131401-0020	A401P-02H6	26	030430
DK029341-4130	A401P-02H6	27	030430
DK029637-5030	A401P-02H6	28	030430
DK029731-0120	A401P-02H6	29	030430
DK029341-0110	A401P-02H6	30	030430
6738-71-1150	A401P-03H6	1	030440
DK101062-9340	A401P-03H6	1	030440
DK131034-1401	A401P-03H6	1	030440
DK131154-6520	A401P-03H6	2	030440
DK131110-7720	A401P-03H6	3	030440
DK131112-5600	A401P-03H6	4	030440
DK131115-1600	A401P-03H6	5	030440
DK131116-8420	A401P-03H6	6	030440
DK131117-3100	A401P-03H6	7	030440
DK131122-0520	A401P-03H6	8	030440
DK139717-0100	A401P-03H6	9	030440
DK131200-2820	A401P-03H6	10	030440
DK131203-0800	A401P-03H6	11	030440
DK131204-1000	A401P-03H6	12	030440
DK131205-0500	A401P-03H6	13	030440
DK131206-0200	A401P-03H6	14	030440
DK029311-0580	A401P-03H6	15	030440
DK029311-0590	A401P-03H6	15	030440
DK029311-0020	A401P-03H6	15	030440
DK029311-0600	A401P-03H6	15	030440
DK029311-0030	A401P-03H6	15	030440
DK029311-0610	A401P-03H6	15	030440
DK029311-0040	A401P-03H6	15	030440
DK029311-0270	A401P-03H6	15	030440
DK029311-0050	A401P-03H6	15	030440
DK029311-0280	A401P-03H6	15	030440
DK029311-0060	A401P-03H6	15	030440
DK029311-0290	A401P-03H6	15	030440
DK029311-0070	A401P-03H6	15	030440
DK029311-0310	A401P-03H6	15	030440
DK029311-0080	A401P-03H6	15	030440
DK029311-0320	A401P-03H6	15	030440
DK029311-0090	A401P-03H6	15	030440
DK029311-0330	A401P-03H6	15	030440
DK029311-0110	A401P-03H6	15	030440
DK029311-0340	A401P-03H6	15	030440
DK029311-0120	A401P-03H6	15	030440
DK029311-0350	A401P-03H6	15	030440
DK029311-0130	A401P-03H6	15	030440
DK029311-0620	A401P-03H6	15	030440
DK029311-0140	A401P-03H6	15	030440
DK029311-0630	A401P-03H6	15	030440
DK029311-0490	A401P-03H6	15	030440
DK029311-0710	A401P-03H6	15	030440
DK029311-0500	A401P-03H6	15	030440
DK131215-2500	A401P-03H6	16	030440
DK131216-0100	A401P-03H6	17	030440
DK131217-0200	A401P-03H6	18	030440
DK131256-0900	A401P-03H6	19	030440
DK131226-0300	A401P-03H6	20	030440
DK131240-0100	A401P-03H6	21	030440
DK131241-0100	A401P-03H6	22	030440
DK131242-0100	A401P-03H6	23	030440
6738-71-1150	A401P-04H6	1	030450
DK105404-6001	A401P-04H6	1	030450
DK154620-0720	A401P-04H6	1	030450
DK154620-0020	A401P-04H6	1	030450
DK154621-3701	A401P-04H6	2	030450
DK016010-0740	A401P-04H6	3	030450
DK154415-3320	A401P-04H6	4	030450
DK154415-3400	A401P-04H6	5	030450
DK154621-3800	A401P-04H6	6	030450
DK154621-4400	A401P-04H6	7	030450
DK139406-1400	A401P-04H6	8	030450
DK160100-0540	A401P-04H6	9	030450
DK154621-3600	A401P-04H6	10	030450
DK016520-2210	A401P-04H6	11	030450
DK154621-3500	A401P-04H6	12	030450
DK154621-3900	A401P-04H6	13	030450
DK154620-1600	A401P-04H6	14	030450
DK010235-1640	A401P-04H6	15	030450
DK026510-1440	A401P-04H6	16	030450
DK029111-0010	A401P-04H6	17	030450
DK139308-1500	A401P-04H6	18	030450
DK029300-7020	A401P-04H6	19	030450
DK154621-4300	A401P-04H6	20	030450
DK154621-4100	A401P-04H6	21	030450
DK154620-7900	A401P-04H6	22	030450
DK154375-9020	A401P-04H6	23	030450
DK029010-6810	A401P-04H6	24	030450
DK020106-1840	A401P-04H6	25	030450
DK154013-6000	A401P-04H6	26	030450
DK154013-2320	A401P-04H6	27	030450
DK014110-8440	A401P-04H6	28	030450
DK154011-4900	A401P-04H6	29	030450
DK155404-5120	A401P-04H6	30	030450
DK026518-2240	A401P-04H6	31	030450
DK154621-2120	A401P-04H6	32	030450
DK029321-2020	A401P-04H6	33	030450
DK029231-2030	A401P-04H6	34	030450
DK154123-2320	A401P-04H6	35	030450
DK029311-0010	A401P-04H6	36	030450
DK029311-0180	A401P-04H6	36	030450
DK029311-0190	A401P-04H6	36	030450
DK139410-0000	A401P-04H6	36	030450
DK029311-0210	A401P-04H6	36	030450
DK139410-0100	A401P-04H6	36	030450
DK139410-3000	A401P-04H6	36	030450
DK139410-3100	A401P-04H6	36	030450
DK139410-3200	A401P-04H6	36	030450
DK154154-5200	A401P-04H6	37	030450
DK154177-2420	A401P-04H6	38	030450
DK029201-6010	A401P-04H6	39	030450
DK154218-7320	A401P-04H6	40	030450
DK016010-0540	A401P-04H6	41	030450
DK154235-4720	A401P-04H6	42	030450
DK154232-3200	A401P-04H6	43	030450
DK154222-5800	A401P-04H6	44	030450
DK155402-3800	A401P-04H6	45	030450
DK154239-5120	A401P-04H6	46	030450
DK154390-0000	A401P-04H6	47	030450
DK154621-3000	A401P-04H6	48	030450
DK026518-2240	A401P-04H6	49	030450
DK154620-8800	A401P-04H6	50	030450
DK154620-8901	A401P-04H6	51	030450
DK010038-1840	A401P-04H6	52	030450
DK154620-1500	A401P-04H6	53	030450
DK154620-4700	A401P-04H6	54	030450
DK014110-8440	A401P-04H6	55	030450
DK014010-8140	A401P-04H6	56	030450
6738-71-1150	A401P-05H6	1	030460
DK105404-6001	A401P-05H6	1	030460
DK154422-7820	A401P-05H6	1	030460
DK154422-7101	A401P-05H6	1	030460
DK154400-9520	A401P-05H6	2	030460
DK154415-1200	A401P-05H6	3	030460
DK146711-0000	A401P-05H6	4	030460
DK154415-1300	A401P-05H6	5	030460
DK029331-2130	A401P-05H6	6	030460
DK029111-2090	A401P-05H6	7	030460
DK154413-2600	A401P-05H6	8	030460
DK154404-5600	A401P-05H6	9	030460
DK154415-1800	A401P-05H6	10	030460
DK026506-1040	A401P-05H6	11	030460
DK013030-6040	A401P-05H6	12	030460
DK154035-1600	A401P-05H6	13	030460
DK154062-2900	A401P-05H6	14	030460
DK014110-6440	A401P-05H6	15	030460
DK154620-3200	A401P-05H6	16	030460
DK020106-1640	A401P-05H6	17	030460
DK154062-5001	A401P-05H6	18	030460
DK014110-6440	A401P-05H6	19	030460
DK029341-0110	A401P-05H6	20	030460
DK029731-0120	A401P-05H6	21	030460
DK154402-3000	A401P-05H6	22	030460
DK154062-2720	A401P-05H6	23	030460
6738-71-1150	A401P-06H6	1	030470
DK105404-6001	A401P-06H6	1	030470
DK154011-0100	A401P-06H6	1	030470
DK154501-1720	A401P-06H6	2	030470
DK154501-1700	A401P-06H6	2	030470
DK154321-0400	A401P-06H6	3	030470
DK154031-4700	A401P-06H6	4	030470
DK139208-0400	A401P-06H6	5	030470
DK154036-0300	A401P-06H6	6	030470
DK139006-7100	A401P-06H6	7	030470
DK154010-0200	A401P-06H6	8	030470
DK020106-3840	A401P-06H6	9	030470
DK154064-4200	A401P-06H6	10	030470
DK020006-1640	A401P-06H6	11	030470
DK020006-1640	A401P-06H6	12	030470
DK020006-1640	A401P-06H6	13	030470
DK020006-1640	A401P-06H6	14	030470
DK154150-0200	A401P-06H6	15	030470
DK154158-5720	A401P-06H6	16	030470
DK029201-2290	A401P-06H6	17	030470
DK026512-1540	A401P-06H6	18	030470
DK154159-1200	A401P-06H6	19	030470
DK154200-7020	A401P-06H6	20	030470
DK154204-4300	A401P-06H6	21	030470
DK029631-8020	A401P-06H6	22	030470
DK016010-1640	A401P-06H6	23	030470
DK139611-0000	A401P-06H6	24	030470
DK139411-0000	A401P-06H6	25	030470
DK029311-1070	A401P-06H6	26	030470
DK154204-4400	A401P-06H6	27	030470
DK025803-1310	A401P-06H6	28	030470
DK154206-2800	A401P-06H6	29	030470
DK154206-0200	A401P-06H6	30	030470
DK154237-1100	A401P-06H6	31	030470
DK154395-8920	A401P-06H6	32	030470
DK154382-3720	A401P-06H6	33	030470
DK020006-1840	A401P-06H6	34	030470
DK154314-2500	A401P-06H6	35	030470
DK029631-0030	A401P-06H6	36	030470
DK029311-0220	A401P-06H6	37	030470
DK029311-0230	A401P-06H6	37	030470
DK154390-0300	A401P-06H6	38	030470
DK154390-5000	A401P-06H6	39	030470
DK026508-1140	A401P-06H6	40	030470
DK154322-0600	A401P-06H6	41	030470
DK154035-2900	A401P-06H6	42	030470
DK154062-3900	A401P-06H6	43	030470
DK154062-4020	A401P-06H6	44	030470
6738-71-1150	A401P-07H6	1	030480
DK105220-5960	A401P-07H6	1	030480
DK152003-1020	A401P-07H6	1	030480
DK152100-1120	A401P-07H6	2	030480
DK152102-1600	A401P-07H6	3	030480
DK152105-1600	A401P-07H6	4	030480
DK029332-6030	A401P-07H6	5	030480
DK152111-2820	A401P-07H6	6	030480
DK152112-0100	A401P-07H6	7	030480
DK152113-0700	A401P-07H6	8	030480
DK152114-0400	A401P-07H6	9	030480
DK152115-0500	A401P-07H6	10	030480
DK152116-0200	A401P-07H6	11	030480
DK152118-0900	A401P-07H6	12	030480
DK029631-6060	A401P-07H6	13	030480

PARTS Nº	FIG. Nº	INDEX	PAGE
DK152121-0200	A401P-07H6	14	030480
DK152200-5420	A401P-07H6	15	030480
DK152300-5920	A401P-07H6	16	030480
DK029731-4680	A401P-07H6	17	030480
DK029341-4130	A401P-07H6	18	030480
DK029341-4130	A401P-07H6	19	030480
DK152320-0100	A401P-07H6	20	030480
6735-71-5460	A401R-01B2	1	030490
6738-71-5450	A401R-01B2	2	030490
6732-71-6510	A401R-01B2	3	030490
6735-71-3840	A401R-01B2	4	030490
6732-71-5740	A4010-01B0Z	1	030500
6738-71-3620	A408P-01B0	1	030510
6732-61-3110	A408P-01B0	2	030510
6738-71-3610	A408P-01B0	3	030510
6735-71-3220	A408P-01B0	4	030510
6734-71-5610	A408P-01B0	5	030510
6738-71-3120	A408P-01B0	6	030510
6736-81-6170	A408P-01B0	7	030510
6738-71-3100	A408P-01B0	8	030510
6738-71-3110	A408P-01B0	8	030510
6738-71-3810	A408P-01B0	8	030510
6130-32-1361	A408P-01B0	9	030510
01582-01411	A408P-01B0	10	030510
6732-71-5450	A408P-01B0	11	030510
6215-81-9710	A408P-01B0	12	030510
07206-30710	A408P-01B0	13	030510
6731-71-5860	A408P-01B0	14	030510
6735-71-5411	A408P-01B0	15	030510
6735-71-5420	A408P-01B0	16	030510
6735-71-5430	A408P-01B0	17	030510
6732-71-6112	A411P-01A0	1	030520
6732-71-6650	A411P-01A0	2	030520
6735-71-6230	A411P-01A0	3	030520
6732-61-6140	A411P-01A0	4	030520
6735-71-5160	A411R-01A7	1	030530
6735-71-6510	A411R-01A7	2	030530
6735-71-6530	A411R-01A7	2	030530
6735-71-6750	A411R-01A7	3	030530
6735-71-3840	A411R-01A7	4	030530
6735-71-5170	A411R-01A7	5	030530
6735-71-5180	A411R-01A7	6	030530
6735-71-5190	A411R-01A7	7	030530
6738-71-5520	A411S-01C0	1	030540
6732-71-6240	A411S-01C0	2	030540
6732-71-6260	A411S-01C0	3	030540
6732-21-5160	A411S-01C0	4	030540
04434-50508	A411S-01C0	5	030540
6216-64-3990	A411S-01C0	6	030540
6732-71-3210	A411S-01C0	7	030540
6738-71-5110	A411S-01C0	8	030540
6738-71-5120	A411S-01C0	9	030540
6738-71-5130	A411S-01C0	10	030540
6734-71-5710	A411S-01C0	11	030540
6735-71-5830	A411S-01C0	12	030540
6734-74-5720	A411S-01C0	13	030540
6734-71-5520	A411S-01C0	14	030540
6734-71-5741	A411S-01C0	15	030540
6735-71-5820	A411S-01C0	16	030540
6735-71-5840	A411S-01C0	17	030540
6735-71-5860	A411S-01C0	18	030540
6735-71-5643	A411S-01C0	19	030540
6735-71-5653	A411S-01C0	20	030540
6735-71-5663	A411S-01C0	21	030540
6734-71-5710	A411S-01C0	22	030540
6735-71-5830	A411S-01C0	23	030540
6734-71-5720	A411S-01C0	24	030540
6734-71-5520	A411S-01C0	25	030540
6734-71-5741	A411S-01C0	26	030540
6735-71-5820	A411S-01C0	27	030540
6735-71-5840	A411S-01C0	28	030540
6735-71-5860	A411S-01C0	29	030540
6732-71-5760	A411S-01C0	30	030540
6734-11-5210	A411S-01C0	31	030540
6732-71-3220	A417P-01B4	1	030550
6736-71-5811	A417P-01B4	2	030550
6735-61-6411	A417P-01B4	3	030550
6735-71-5371	A417P-01B4	4	030550
6732-71-6510	A417P-01B4	5	030550
6735-71-3840	A417P-01B4	6	030550
6141-71-1710	A417P-01B4	7	030550
6738-11-3090	A4219-01A6	1	030560
6738-11-3100	A4219-01A6	1	030560
6738-11-3120	A4219-01A6	2	030560
6734-11-3610	A4219-01A6	3	030560
6734-11-3620	A4219-01A6	3	030560
6734-11-3630	A4219-01A6	3	030560
6734-11-3640	A4219-01A6	3	030560
6734-11-3650	A4219-01A6	3	030560
6734-11-3660	A4219-01A6	3	030560
6734-11-3670	A4219-01A6	3	030560
6734-11-3680	A4219-01A6	3	030560
6734-11-3690	A4219-01A6	3	030560
6734-11-3710	A4219-01A6	3	030560
6734-11-3720	A4219-01A6	3	030560
6734-11-3730	A4219-01A6	3	030560
6734-11-3740	A4219-01A6	3	030560
6734-11-3750	A4219-01A6	3	030560
6734-11-3760	A4219-01A6	3	030560
6734-11-3770	A4219-01A6	3	030560
6734-11-3780	A4219-01A6	3	030560
6734-11-3790	A4219-01A6	3	030560
6734-11-3810	A4219-01A6	3	030560
6734-11-3820	A4219-01A6	3	030560
6734-11-3830	A4219-01A6	3	030560
6734-11-3840	A4219-01A6	3	030560
6734-11-3850	A4219-01A6	3	030560
6734-11-3860	A4219-01A6	3	030560
6734-11-3870	A4219-01A6	3	030560
6734-11-3880	A4219-01A6	3	030560
6734-11-3890	A4219-01A6	3	030560
6734-11-3910	A4219-01A6	3	030560
6734-11-3920	A4219-01A6	3	030560
6734-11-3930	A4219-01A6	3	030560
6734-11-3430	A4219-01A6	4	030560
6732-71-6260	A4219-01A6	5	030560
6732-11-3850	A4219-01A6	6	030560
6144-71-5750	A423V-01A0Z	1	030570
6736-61-1202	A501P-01A3	1	030580
6735-61-1102	A501P-01A3	1	030580
6736-61-1520	A501P-01A3	2	030580
6731-61-1370	A501P-01A3	3	030580
6732-61-6120	A501R-01A0	1	030590
6731-61-6260	A501R-01A0	2	030590
6732-61-6130	A501R-01A0	3	030590
6732-21-1910	A501S-01A0	1	030600
6736-61-1202	A5019-01A0	1	030610
6735-61-1102	A5019-01A0	1	030610
6736-61-1520	A5019-01A0	2	030610
6731-61-1370	A5019-01A0	3	030610
6732-61-3503	A502P-01D2	1	030620
6732-61-3533	A502P-01D2	2	030620
06347-06207	A502P-01D2	3	030620
06330-06205	A502P-01D2	4	030620
6162-63-1440	A502P-01D2	5	030620
6732-61-3542	A502P-01D2	6	030620
07046-22216	A502P-01D2	7	030620
6732-61-3750	A502P-01D2	8	030620
6732-61-3170	A502P-01D2	9	030620
6732-62-3220	A502P-01D2	10	030620
6735-71-3220	A502R-01A1	1	030630
6732-61-3160	A504P-01A3	1	030640
6732-61-4120	A601S-01F3	1	030650
6738-62-4110	A601S-01F3	2	030650
6736-61-4150	A601S-01F3	3	030650
6732-61-4220	A601S-01F3	4	030650
6738-61-3911	A601S-01F3	5	030650
6754-81-6110	A601T-01B1	1	030660
6732-81-6611	A601T-01B1	1	030660
6754-81-6120	A601T-01B1	1	030660
6732-81-6641	A601T-01B1	1	030660
6732-81-6630	A601T-01B1	2	030660
6732-21-5160	A601T-01B1	3	030660
6736-21-3210	A601T-01B1	4	030660
01435-01090	A601T-01B1	5	030660
01641-01016	A601T-01B1	6	030660
6732-81-6560	A601T-01B1	7	030660
6732-81-6690	A601T-01B1	8	030660
6732-21-6630	A601T-01B1	9	030660
6738-81-6120	A601V-01A0	1	030670
6735-81-6180	A621S-01A8	1	030680
6736-19-1310	A8110-01A9	1	030690
6736-19-1410	A8110-01A9	2	030690
6736-18-1310	A8110-01A9	3	030690
6735-11-1870	A8110-01A9	4	030690
6735-11-1840	A8110-01A9	4	030690
6736-29-1410	A8110-02A9	1	030700
6736-29-1420	A8110-02A9	2	030700
6736-29-2110	A8110-02A9	3	030700
6736-39-1220	A8110-03A9	1	030710
6736-39-1130	A8110-03A9	2	030710
6735-29-8100	A8110-03A9	3	030710
6735-28-8100	A8110-03A9	3	030710
6735-27-8100	A8110-03A9	3	030710
6735-26-8100	A8110-03A9	3	030710
6736-29-8610	A8110-03A9	5	030710
6735-28-8200	A8110-03A9	5	030710
6736-28-8620	A8110-03A9	5	030710
6736-27-8620	A8110-03A9	5	030710
6736-29-8700	A8110-03A9	5	030710
6736-28-8700	A8110-03A9	5	030710
6736-39-3400	A8110-04A9	1	030720
6736-38-3400	A8110-04A9	1	030720
6736-37-3400	A8110-04A9	1	030720
6736-36-3400	A8110-04A9	1	030720
6738-39-2031	A8110-04A9	2	030720
6738-38-2031	A8110-04A9	2	030720
6738-38-2111	A8110-04A9	6	030720
6738-K1-1201	A8128-01A1	1	030730
6732-11-4811	A8128-01A1	1	030730
07005-01212	A8128-01A1	1	030730
07005-01012	A8128-01A1	1	030730
07005-01212	A8128-01A1	1	030730
07005-01412	A8128-01A1	1	030730
6732-71-6260	A8128-01A1	1	030730
6738-11-4370	A8128-01A1	1	030730
6735-11-4812	A8128-01A1	1	030730
6732-11-3850	A8128-01A1	1	030730
6736-11-3420	A8128-01A1	1	030730
6732-81-8830	A8128-01A1	1	030730
6732-41-4540	A8128-01A1	1	030730
6735-11-1821	A8128-01A1	1	030730
6736-11-5820	A8128-01A1	1	030730
6732-61-6250	A8128-01A1	1	030730
6732-61-6240	A8128-01A1	1	030730
6207-51-7690	A8128-01A1	1	030730
6736-51-8710	A8128-01A1	1	030730
6732-81-8860	A8128-01A1	1	030730
6732-11-8181	A8128-01A1	1	030730
6732-11-8210	A8128-01A1	1	030730
6732-81-8220	A8128-01A1	1	030730
6738-K2-1201	A8128-02A1	2	030740
6735-21-1960	A8128-02A1	2	030740
6215-81-9710	A8128-02A1	2	030740
6735-21-1930	A8128-02A1	2	030740
6731-21-1190	A8128-02A1	2	030740
6732-21-3811	A8128-02A1	2	030740
6732-21-3870	A8128-02A1	2	030740
6732-21-3880	A8128-02A1	2	030740
6731-21-4220	A8128-02A1	2	030740
6736-21-3450	A8128-02A1	2	030740
6732-11-8210	A8128-02A1	2	030740
6738-21-6180	A8128-02A1	2	030740
6738-21-6650	A8128-02A1	2	030740
6738-21-6660	A8128-02A1	2	030740
07000-72110	A8128-02A1	2	030740
6732-21-3220	A8128-02A1	2	030740
6735-21-4191	A8128-02A1	2	030740
6735-K1-3001	A8128-02A1	2	030740
6732-21-4171	A8128-02A1	2	030740
6732-21-4161	A8128-02A1	2	030740
07005-01012	A8128-02A1	2	030740
6735-61-6411	A8128-02A1	2	030740
6732-51-4420	A8128-02A1	2	030740
6732-51-4432	A8128-02A1	2	030740
6732-61-2311	A8128-02A1	2	030740
6733-21-5520	A8128-02A1	2	030740
07005-02216	A8128-02A1	2	030740
6732-81-6811	A8128-02A1	2	030740
6731-51-8150	A8128-02A1	2	030740
6732-61-6130	A8128-02A1	2	030740
6736-61-1520	A8128-02A1	2	030740
6136-21-5870	A8128-02A1	2	030740
6736-21-3360	A8128-02A1	2	030740
6732-11-8181	B9999-01R0	1	030750
6732-11-8210	B9999-01R0	2	030750
6736-51-5142	B9999-01R0	3	030750
6732-71-6112	B9999-01R0	4	030750
6732-81-6170	B9999-01R0	5	030750
6732-11-8181	B9999-01T5	1	030760
6732-11-8210	B9999-01T5	2	030760
6736-51-5142	B9999-01T5	3	030760
6732-71-6112	B9999-01T5	4	030760
6734-81-6410	B9999-01T5	5	030760
6738-81-7400	B0000-01A0	1	030010
6738-81-7410	B0000-01A0	1	030010
600-185-3100	B0000-01A0	2	030010
600-185-3110	B0000-01A0	2	030010
600-184-1370	B0000-01A0	4	030010
600-184-1310	B0000-01A0	5	030010
600-184-2810	B0000-01A0	6	030010
600-184-1350	B0000-01A0	6	030010
6131-11-4520	B0000-01A0	7	030010
6643-11-4641	B0000-01A0	8	030010
600-181-1930	B0000-01A0	9	030010
600-184-2810	B0000-01A0	10	030010
6738-11-9111	B0000-01A0	11	030010
01435-00820	B0000-01A0	12	030010
6738-11-9121	B0000-01A0	13	030010
01435-00820	B0000-01A0	14	030010
6738-11-5640	B0000-01A0	15	030010
6738-11-5650	B0000-01A0	16	030010
01435-01025	B0000-01A0	17	030010
01435-00825	B0000-01A0	18	030010
01435-00845	B0000-01A0	19	030010
207-54-15180	B0000-01A0	20	030010
01436-01205	B0000-01A0	21	030010
6738-11-4440	B0000-01A0	22	030010
07299-00105	B0000-01A0	23	030010
600-815-8860	B0000-01A0	24	030010
6685-81-4920	B0000-01A0	25	030010
6738-81-7400	B0000-01A1	1	030015
6738-81-7410	B0000-01A1	1	030015
600-185-3100	B0000-01A1	2	030015
600-185-3110	B0000-01A1	2	030015
600-184-1370	B0000-01A1	4	030015
600-184-1310	B0000-01A1	5	030015
600-184-2810	B0000-01A1	6	030015
600-184-1350	B0000-01A1	6	030015
6131-11-4520	B0000-01A1	7	030015
6643-11-4641	B0000-01A1	8	030015
600-181-1930	B0000-01A1	9	030015
600-184-2810	B0000-01A1	10	030015
6738-11-9111	B0000-01A1	11	030015
01435-00820	B0000-01A1	12	030015
6738-11-9121	B0000-01A1	13	030015
01435-00820	B0000-01A1	14	030015
6738-11-5640	B0000-01A1	15	030015
6738-11-5650	B0000-01A1	16	030015
01435-01025	B0000-01A1	17	030015

PARTS Nº	FIG. Nº	INDEX	PAGE
01435-00825	B0000-01A1	18	030015
01435-00845	B0000-01A1	19	030015
207-54-15180	B0000-01A1	20	030015
01436-01205	B0000-01A1	21	030015
6738-11-4440	B0000-01A1	22	030015
07299-00105	B0000-01A1	23	030015
600-815-8860	B0000-01A1	24	030015
6685-81-4920	B0000-01A1	25	030015
419-11-B1110	B0000-01A1	26	030015
6732-11-1970	B0000-02A0	1	030020
01010-81025	B0000-02A0	2	030020
01643-31032	B0000-02A0	3	030020
6738-71-5530	B0000-03A0	1	030030
6738-81-8470	B0000-04A0	1	030040
01435-01020	B0000-04A0	2	030040
6735-81-8710	B0000-04A0	3	030040
6735-81-8130	B0000-04A0	4	030040
01435-00820	B0000-04A0	5	030040
6134-11-5120	B0000-04A0	6	030040
01435-01065	B0000-04A0	7	030040
6206-11-4590	B0000-04A0	8	030040
01435-01030	B0000-04A0	9	030040
6206-11-4590	B0000-04A0	10	030040
6204-81-6740	B0000-04A0	11	030040
01435-00830	B0000-04A0	12	030040
01435-01040	B0000-04A0	13	030040
154-61-16570	B0000-04A0	14	030040
01643-31032	B0000-04A0	15	030040
6737-81-8241	B0000-04A0	16	030040
6738-81-8511	B0000-04A0	17	030040
6738-81-8461	B0000-04A0	18	030040
01435-00816	B0000-04A0	19	030040
154-61-16570	B0000-04A0	20	030040
01435-00820	B0000-04A0	21	030040
6738-81-6110	B0000-05A0	1	030050
6738-81-6130	B0000-05A0	2	030050
01435-00812	B0000-05A0	3	030050
01640-20816	B0000-05A0	4	030050
6738-11-5542	B0000-06A0	1	030060
6150-11-5710	B0000-06A0	2	030060
01435-01025	B0000-06A0	3	030060
6738-11-5611	B0000-06A0	4	030060
6738-11-5621	B0000-06A0	5	030060
01435-01020	B0000-06A0	6	030060
6738-11-5342	B0000-06A0	7	030060
01435-01085	B0000-06A0	8	030060
01435-01025	B0000-06A0	9	030060
01435-00820	B0000-06A0	10	030060
01435-00830	B0000-06A0	11	030060
6738-11-5440	B0000-06A0	12	030060
01435-00825	B0000-06A0	13	030060
6202-81-6821	B0000-06A0	14	030060
209-62-11810	B0000-06A0	15	030060
6738-11-5360	B0000-06A0	16	030060
6738-11-5411	B0000-06A0	17	030060
01435-00820	B0000-06A0	18	030060
01010-81225	B0000-06A0	19	030060
01643-31232	B0000-06A0	19A	030060
6738-11-5450	B0000-06A0	20	030060
6738-11-5460	B0000-06A0	21	030060
6738-11-5630	B0000-06A0	22	030060
01435-01035	B0000-06A0	23	030060
6738-11-5470	B0000-06A0	24	030060
6738-11-5480	B0000-06A0	25	030060
01435-01040	B0000-06A0	26	030060
6738-11-5371	B0000-06A0	27	030060
01435-01025	B0000-06A0	28	030060
01435-01035	B0000-06A0	29	030060
01580-01008	B0000-06A0	30	030060
01435-01070	B0000-06A0	31	030060
01435-01080	B0000-06A0	32	030060
6738-11-5660	B0000-06A0	33	030060
6738-11-5670	B0000-06A0	34	030060
01435-01030	B0000-06A0	35	030060
01435-01085	B0000-06A0	36	030060
6738-11-5680	B0000-06A0	37	030060
01435-01080	B0000-06A0	38	030060
01435-01085	B0000-06A0	39	030060
01435-01050	B0000-06A0	40	030060
01643-31032	B0000-06A0	41	030060
419-54-B4110	B0000-06A0	42	030060
600-815-9260	B0000-07A0	1	030070
01435-00620	B0000-07A0	2	030070
01640-20610	B0000-07A0	3	030070
6732-81-9520	B0000-07A0	4	030070
6732-81-9511	B0000-07A0	5	030070
01435-01070	B0000-07A0	6	030070
01584-00806	B0000-07A0	7	030070
6204-81-9640	B0000-07A0	8	030070
01580-00605	B0000-07A0	9	030070
04250-60639	B0000-07A0	10	030070
01590-10607	B0000-07A0	11	030070
04050-11212	B0000-07A0	12	030070
04248-50625	B0000-07A0	13	030070
01580-00605	B0000-07A0	14	030070
01508-40603	B0000-07A0	15	030070
6732-21-3990	B0000-07A0	16	030070
01640-20816	B0000-07A0	17	030070
600-861-6420	B0000-08A0	1	030080
600-861-3420	B0000-08A1	1	030081
600-861-6420	B0000-09A0	1	030090
ND121400-0800	B0000-09A0	1	030090
ND021100-4210	B0000-09A0	1	030090
ND021401-4980	B0000-09A0	2	030090
ND021411-0570	B0000-09A0	3	030090
ND021045-0530	B0000-09A0	4	030090
ND949006-5590	B0000-09A0	5	030090
ND949100-5010	B0000-09A0	6	030090
ND949043-2000	B0000-09A0	7	030090
ND021501-8050	B0000-09A0	8	030090
ND021580-4820	B0000-09A0	9	030090
ND021620-2720	B0000-09A0	10	030090
ND126000-2320	B0000-09A0	11	030090
ND021551-2480	B0000-09A0	12	030090
ND021605-1970	B0000-09A0	13	030090
ND021605-2481	B0000-09A0	14	030090
ND949006-5460	B0000-09A0	15	030090
ND91310-04251	B0000-09A0	16	030090
ND949007-5110	B0000-09A0	16	030090
ND949056-2481	B0000-09A0	17	030090
ND949056-3080	B0000-09A0	18	030090
ND021200-8380	B0000-09A0	19	030090
ND949100-2790	B0000-09A0	20	030090
ND021506-0070	B0000-09A0	21	030090
ND021041-8620	B0000-09A0	22	030090
ND949056-2520	B0000-09A0	23	030090
ND021626-0190	B0000-09A0	24	030090
ND021626-0250	B0000-09A0	25	030090
ND021542-0160	B0000-09A0	26	030090
ND949006-6401	B0000-09A0	27	030090
ND949007-6280	B0000-09A0	28	030090
ND021602-5230	B0000-09A0	29	030090
ND92150-06061	B0000-09A0	30	030090
600-863-5111	B0000-10A0	1	030100
01435-01040	B0000-10A0	2	030100
01144-31035	B0000-10A0	3	030100
01584-01008	B0000-10A0	4	030100
600-863-5111	B0000-11A0	1	030110
ND028100-5410	B0000-11A0	1	030110
ND028200-5250	B0000-11A0	2	030110
ND949100-3161	B0000-11A0	3	030110
ND949100-5290	B0000-11A0	3	030110
ND949100-3540	B0000-11A0	4	030110
ND028300-6551	B0000-11A0	4	030110
ND028099-3270	B0000-11A0	5	030110
ND028300-6751	B0000-11A0	6	030110
ND949100-4501	B0000-11A0	7	030110
ND949100-1920	B0000-11A0	8	030110
ND949170-4040	B0000-11A0	9	030110
ND028381-0071	B0000-11A0	10	030110
ND128401-5621	B0000-11A0	11	030110
ND153400-6740	B0000-11A0	12	030110
ND128099-5770	B0000-11A0	13	030110
ND028099-5100	B0000-11A0	14	030110
ND053660-0443	B0000-11A0	15	030110
ND053404-0240	B0000-11A0	16	030110
ND053505-0290	B0000-11A0	17	030110
ND053480-7560	B0000-11A0	18	030110
ND949047-4440	B0000-11A0	19	030110
ND028065-0250	B0000-11A0	20	030110
ND028510-0880	B0000-11A0	21	030110
ND028520-0011	B0000-11A0	22	030110
ND028501-7711	B0000-11A0	23	030110
ND128961-0010	B0000-11A0	24	030110
ND949170-4070	B0000-11A0	25	030110
ND028371-3210	B0000-11A0	26	030110
ND028306-0070	B0000-11A0	27	030110
ND028063-0030	B0000-11A0	28	030110
ND028062-0130	B0000-11A0	29	030110
ND949042-3680	B0000-11A0	30	030110
ND90801-10050	B0000-11A0	31	030110
ND949042-3690	B0000-11A0	32	030110
ND949006-4720	B0000-11A0	33	030110
ND949056-4480	B0000-11A0	34	030110
ND028327-0171	B0000-11A0	35	030110
ND90258-10001	B0000-11A0	36	030110
ND028901-0361	B0000-11A0	37	030110
ND028371-3200	B0000-11A0	38	030110
ND949007-6530	B0000-11A0	39	030110
ND028530-1090	B0000-11A0	40	030110
ND028530-1100	B0000-11A0	41	030110
ND949007-6850	B0000-11A0	42	030110
ND028062-5790	B0000-11A0	43	030110
ND90170-10061	B0000-11A0	44	030110
ND028901-5190	B0000-11A0	45	030110
ND90200-06241	B0000-11A0	46	030110
418-01-31113	B0100-01A0	1	030120
418-01-31123	B0100-01A0	2	030120
418-01-31133	B0100-01A0	3	030120
418-01-31143	B0100-01A0	4	030120
01010-81240	B0100-01A0	5	030120
01643-31232	B0100-01A0	6	030120
01010-81250	B0100-01A0	7	030120
01643-31032	B0100-01A0	8	030120
01010-81260	B0100-01A0	9	030120
01643-31232	B0100-01A0	10	030120
424-61-11110	B0100-01A0	11	030120
418-01-11112	B0100-01A0	12	030120
419-01-11162	B0100-01A0	13	030120
01011-82220	B0100-01A0	14	030120
419-01-11162	B0100-01A0	15	030120
01580-02218	B0100-01A0	16	030120
01643-32260	B0100-01A0	17	030120
6732-21-1920	B0100-01A0	18	030120
418-07-32113	B0110-01A1	1	030130
01010-81220	B0110-01A1	2	030130
01643-31232	B0110-01A1	3	030130
419-06-32353	B0110-01A1	4	030130
419-06-32352	B0110-01A1	4	030130
04434-53212	B0110-01A1	5	030130
07095-20523	B0110-01A1	6	030130
01010-81020	B0110-01A1	7	030130
01643-31032	B0110-01A1	8	030130
04434-53212	B0110-01A1	9	030130
07095-20523	B0110-01A1	10	030130
01010-81020	B0110-01A1	11	030130
01643-31032	B0110-01A1	12	030130
195-33-11220	B0110-01A1	33	030130
01050-51245	B0110-01A1	34	030130
01643-31232	B0110-01A1	35	030130
04434-51412	B0110-01A1	36	030130
01010-81020	B0110-01A1	37	030130
01643-31032	B0110-01A1	38	030130
04434-51012	B0110-01A1	39	030130
01010-81020	B0110-01A1	40	030130
01643-31032	B0110-01A1	41	030130
42A-942-1270	B0110-01A1	42	030130
04434-51012	B0110-01A1	43	030130
01010-81020	B0110-01A1	44	030130
01643-31032	B0110-01A1	45	030130
01010-81020	B0110-01A1	46	030130
01643-31032	B0110-01A1	47	030130
01010-81016	B0110-01A1	48	030130
01643-31032	B0110-01A1	49	030130
08034-40521	B0110-01A1	50	030130
08034-00310	B0110-01A1	51	030130
418-06-32274	B0110-02A0	1	030140
418-06-32273	B0110-02A0	1	030140
04434-51912	B0110-02A0	2	030140
01010-81020	B0110-02A0	3	030140
01643-31032	B0110-02A0	4	030140
08028-CD040	B0110-02A0	5	030140
419-06-32251	B0110-02A0	6	030140
01010-81020	B0110-02A0	7	030140
01643-31032	B0110-02A0	8	030140
6131-22-3750	B0110-02A0	9	030140
01010-81250	B0110-02A0	10	030140
04434-51912	B0110-01A1	13	030130
04434-52312	B0110-01A1	14	030130
01010-81020	B0110-01A1	15	030130
01643-31032	B0110-01A1	16	030130
426-01-12360	B0110-01A1	17	030130
04434-51412	B0110-01A1	18	030130
08193-21012	B0110-01A1	19	030130
01010-81020	B0110-01A1	20	030130
01643-31032	B0110-01A1	21	030130
426-07-11130	B0110-01A1	22	030130
01011-81215	B0110-01A1	23	030130
01643-31232	B0110-01A1	24	030130
04434-51412	B0110-01A1	25	030130
01010-81020	B0110-01A1	26	030130
01643-31032	B0110-01A1	27	030130
01010-81025	B0110-01A1	28	030130
01643-31032	B0110-01A1	29	030130
04434-51012	B0110-01A1	30	030130
01010-81020	B0110-01A1	31	030130
01643-31032	B0110-01A1	32	030130

PARTS Nº	FIG. Nº	INDEX	PAGE
01643-31232	B0110-02A0	11	030140
11Y-06-11630	B0110-02A0	12	030140
7861-92-3380	B0110-02A0	13	030140
11Y-06-11391	B0110-02A0	14	030140
01010-80612	B0110-02A0	15	030140
01643-30623	B0110-02A0	16	030140
418-06-31284	B0110-02A0	17	030140
01010-81220	B0110-02A0	18	030140
01643-31232	B0110-02A0	19	030140
01010-80816	B0110-02A0	20	030140
01643-30823	B0110-02A0	21	030140
7861-93-2330	B0110-02A0	22	030140
600-815-2170	B0110-02A0	23	030140
01010-80616	B0110-02A0	24	030140
01643-30623	B0110-02A0	25	030140
418-06-32281	B0110-02A0	26	030140
565-06-13212	B0110-03A0	1	030150
7861-93-3520	B0110-03A0	2	030150
419-02-31130	B0300-01A0	1	030160
419-02-31120	B0300-01A0	2	030160
01010-81080	B0300-01A0	3	030160
01643-31032	B0300-01A0	4	030160
01643-31032	B0300-01A0	5	030160
01580-11008	B0300-01A0	6	030160
419-12-31110	B0600-01A0	1	030170
01010-81040	B0600-01A0	2	030170
01643-31032	B0600-01A0	3	030170
419-12-31130	B0600-01A0	4	030170
01010-81060	B0600-01A0	5	030170
01643-31032	B0600-01A0	6	030170
419-03-31105	C0110-01A0	1	060010
419-03-31114	C0110-01A0	1	060010
416-S14-2270	C0110-01A0	1A	060010
419-03-31122	C0110-01A0	2	060010
419-03-31511	C0110-01A0	3	060010
419-03-31521	C0110-01A0	4	060010
419-03-31540	C0110-01A0	5	060010
419-03-31531	C0110-01A0	6	060010
07000-13035	C0110-01A0	7	060010
01011-81040	C0110-01A0	8	060010
01643-31032	C0110-01A0	9	060010
01010-81020	C0110-01A0	10	060010
01643-31032	C0110-01A0	11	060010
419-03-31550	C0110-01A0	12	060010
419-03-31132	C0110-01A0	13	060010
419-03-31413	C0110-01A0	14	060010
419-03-31412	C0110-01A0	14	060010
419-03-31424	C0110-01A0	15	060010
419-03-31423	C0110-01A0	15	060010
419-03-31433	C0110-01A0	16	060010
419-03-31442	C0110-01A0	17	060010
419-03-31453	C0110-01A0	18	060010
419-03-31452	C0110-01A0	18	060010
419-03-31460	C0110-01A0	19	060010
419-03-31470	C0110-01A0	20	060010
418-03-31570	C0110-01A0	21	060010
20Y-03-11330	C0110-01A0	22	060010
01010-81020	C0110-01A0	23	060010
01643-31032	C0110-01A0	24	060010
419-03-31490	C0110-01A0	25	060010
07000-13035	C0110-01A0	26	060010
419-03-31164	C0110-01A0	27	060010
419-03-31163	C0110-01A0	27	060010
419-03-31374	C0110-01A0	28	060010
419-03-31373	C0110-01A0	28	060010
419-03-31240	C0110-01A0	29	060010
419-03-31250	C0110-01A0	30	060010
419-03-31230	C0110-01A0	31	060010
01010-81020	C0110-01A0	32	060010
01643-31032	C0110-01A0	33	060010
419-03-31260	C0110-01A0	34	060010
419-03-31310	C0110-01A0	35	060010
419-03-31320	C0110-01A0	36	060010
419-03-31330	C0110-01A0	37	060010
01010-81020	C0110-01A0	38	060010
01643-31032	C0110-01A0	39	060010
419-03-31710	C0110-01A0	40	060010
415-54-31190	C0110-01A0	41	060010
425-54-13480	C0110-01A0	42	060010
01010-81025	C0110-01A0	43	060010
01643-31032	C0110-01A0	44	060010
419-54-32210	C0110-01A0	45	060010
419-54-32220	C0110-01A0	46	060010
201-54-72910	C0110-01A0	47	060010
01010-81020	C0110-01A0	48	060010
419-54-32150	C0110-01A0	49	060010
419-54-32160	C0110-01A0	50	060010
01010-81016	C0110-01A0	51	060010
01643-31032	C0110-01A0	52	060010
419-03-31164	C0110-02A0	1	060020
419-03-31374	C0110-02A0	2	060020
419-03-31240	C0110-02A0	3	060020
419-03-31250	C0110-02A0	4	060020
419-03-31230	C0110-02A0	5	060020
01010-81020	C0110-02A0	6	060020
01643-31032	C0110-02A0	7	060020
419-03-31260	C0110-02A0	8	060020
419-03-B2021	C0110-02A0	9	060020
419-03-B2020	C0110-02A0	9	060020
419-03-31320	C0110-02A0	10	060020
419-03-31330	C0110-02A0	11	060020
01010-81020	C0110-02A0	12	060020
01643-31032	C0110-02A0	13	060020
419-03-B2030	C0110-02A0	14	060020
419-03-B2040	C0110-02A0	15	060020
419-54-B5310	C0110-02A0	16	060020
419-54-B5320	C0110-02A0	17	060020
425-54-13480	C0110-02A0	18	060020
419-54-B5350	C0110-02A0	19	060020
419-54-32220	C0110-02A0	20	060020
201-54-72910	C0110-02A0	21	060020
01010-81020	C0110-02A0	22	060020
419-54-32150	C0110-02A0	23	060020
419-54-32160	C0110-02A0	24	060020
01010-81016	C0110-02A0	25	060020
01643-31032	C0110-02A0	26	060020
419-54-B5380	C0110-02A0	27	060020
419-03-B2110	C0110-02A0	28	060020
419-03-A1010	C0110-02A0	29	060020
01010-80612	C0110-02A0	30	060020
01643-30623	C0110-02A0	31	060020
419-03-A1010	C0110-03A0	1	060030
AF0406.122.0000	C0110-03A0	1	060030
AF0406.122.7000	C0110-03A0	1	060030
AF0406.122.1000	C0110-03A0	2	060030
AF0406.122.2000	C0110-03A0	3	060030
AF0406.122.5000	C0110-03A0	4	060030
AF0406.122.4030	C0110-03A0	5	060030
AF0406.122.4040	C0110-03A0	6	060030
AF8050.019.0000	C0110-03A0	7	060030
AF8054.010.0000	C0110-03A0	8	060030
AF8050.033.0000	C0110-03A0	9	060030
AF608.946	C0110-03A0	10	060030
AF608.945	C0110-03A0	11	060030
AF8400.303.0024	C0110-03A0	12	060030
AF8103.001.4600	C0110-03A0	13	060030
AF608.950	C0110-03A0	14	060030
AF603.295	C0110-03A0	15	060030
AF603.655	C0110-03A0	16	060030
AF8065.058.0000	C0110-03A0	17	060030
AF8407.400.0094	C0110-03A0	18	060030
419-43-17920	C0110-04A0	1	060040
416-03-11270	C0110-04A0	2	060040
416-03-11260	C0110-04A0	3	060040
416-03-11250	C0110-04A0	4	060040
416-03-11260	C0110-04A0	5	060040
418-03-31182	C0110-04A0	6	060040
416-03-11250	C0110-04A0	7	060040
416-03-11260	C0110-04A0	8	060040
419-03-B2040	C0110-04A0	9	060040
01010-81245	C0110-04A0	8	060040
418-03-11390	C0110-04A0	9	060040

PARTS Nº	FIG. Nº	INDEX	PAGE
415-03-11210	C0110-04A0	10	060040
416-03-11210	C0110-04A0	11	060040
01010-81265	C0110-04A0	12	060040
418-03-11390	C0110-04A0	13	060040
415-03-11210	C0110-04A0	14	060040
416-03-11210	C0110-04A0	15	060040
01010-81265	C0110-04A0	16	060040
01643-31232	C0110-04A0	17	060040
416-03-11281	C0110-04A0	18	060040
419-43-17920	C0110-04A1	1	060050
416-03-11270	C0110-04A1	2	060050
416-03-11260	C0110-04A1	3	060050
418-03-31182	C0110-04A1	4	060050
416-03-11250	C0110-04A1	5	060050
416-03-11260	C0110-04A1	6	060050
419-43-17920	C0110-04A1	7	060050
01010-81245	C0110-04A1	8	060050
418-03-11390	C0110-04A1	9	060050
415-03-11210	C0110-04A1	10	060050
416-03-11210	C0110-04A1	11	060050
01010-81265	C0110-04A1	12	060050
418-03-11390	C0110-04A1	13	060050
415-03-11210	C0110-04A1	14	060050
416-03-11210	C0110-04A1	15	060050
01010-81265	C0110-04A1	16	060050
01643-31232	C0110-04A1	17	060050
416-03-11281	C0110-04A1	18	060050
419-03-33211	C0110-05A0	1	060060
418-03-33220	C0110-05A0	1	060060
419-03-33290	C0110-05A0	1A	060060
419-03-33231	C0110-05A0	1B	060060
01010-80820	C0110-05A0	1C	060060
01643-30823	C0110-05A0	1D	060060
419-03-33242	C0110-05A0	2	060060
418-18-32342	C0110-05A0	3	060060
21W-62-43980	C0110-05A0	4	060060
07000-12018	C0110-05A0	5	060060
07000-12011	C0110-05A0	6	060060
02896-11015	C0110-05A0	7	060060
02896-11008	C0110-05A0	8	060060
419-03-33253	C0110-05A0	9	060060
01010-81035	C0110-05A0	10	060060
01643-31032	C0110-05A0	11	060060
01010-80825	C0110-05A0	12	060060
01643-30823	C0110-05A0	13	060060
418-03-33190	C0110-05A0	14	060060
416-54-34230	C0110-05A0	15	060060
418-03-33118	C0110-05A0	16	060060
418-03-33124	C0110-05A0	17	060060
418-03-33123	C0110-05A0	17	060060
418-03-33131	C0110-05A0	18	060060
419-03-31340	C0110-05A0	19	060060
418-03-33142	C0110-05A0	19	060060
01010-81020	C0110-05A0	20	060060
01010-81020	C0110-05A0	20	060060
01643-31032	C0110-05A0	21	060060
01643-31032	C0110-05A0	21	060060
01010-81025	C0110-05A0	22	060060
01643-31032	C0110-05A0	23	060060
01010-81230	C0110-05A0	24	060060
01643-31232	C0110-05A0	25	060060
04052-11038	C0110-05A0	26	060060
01640-21016	C0110-05A0	27	060060
419-03-33170	C0110-05A0	28	060060
418-03-33280	C0110-05A0	29	060060
01010-80635	C0110-05A0	30	060060
01643-30623	C0110-05A0	31	060060
419-14-31310	C0110-06A0	1	060070
419-14-31320	C0110-06A0	2	060070
01010-81025	C0110-06A0	3	060070
01643-31032	C0110-06A0	4	060070
04434-82712	C0110-06A0	5	060070
07095-20420	C0110-06A0	6	060070
01010-81020	C0110-06A0	7	060070
01643-31032	C0110-06A0	8	060070
418-06-12430	C0110-06A0	9	060070
04434-51912	C0110-06A0	10	060070
01010-81020	C0110-06A0	11	060070
01643-31032	C0110-06A0	12	060070
02896-21012	C0110-06A0	13	060070
419-14-31360	C0110-06A1	14	060080
419-14-31350	C0110-06A1	15	060080
419-03-31350	C0110-06A1	15	060080
419-Z03-3150	C0110-06A0	16	060070
01010-81020	C0110-06A1	16	060080
01643-31032	C0110-06A0	18	060070
421-09-21420	C0110-06A0	19	060070
419-14-31310	C0110-06A1	1	060080
419-14-31320	C0110-06A1	2	060080
01010-81025	C0110-06A1	3	060080
01643-31032	C0110-06A1	4	060080
04434-52712	C0110-06A1	5	060080
07095-20420	C0110-06A1	6	060080
01010-81020	C0110-06A1	7	060080
01643-31032	C0110-06A1	8	060080
418-06-12430	C0110-06A1	9	060080
04434-51912	C0110-06A1	10	060080
01010-81020	C0110-06A1	11	060080
01643-31032	C0110-06A1	12	060080
02896-21012	C0110-06A1	13	060080
419-14-31360	C0110-06A1	14	060080
419-14-31350	C0110-06A1	15	060080
419-03-32110	C0120-01A0	1	060090
419-03-32122	C0120-01A0	2	060090
419-03-32171	C0120-01A0	3	060090
418-03-32180	C0120-01A0	4	060090
418-03-32250	C0120-01A0	5	060090
419-03-32141	C0120-01A0	6	060090
418-03-32153	C0120-01A0	7	060090
418-03-32160	C0120-01A0	8	060090
07289-00070	C0120-01A0	9	060090
07289-00055	C0120-01A0	10	060090
07299-00070	C0120-01A0	11	060090
418-03-31251	C0120-01A0	12	060090
01010-81225	C0120-01A0	13	060090
01643-31232	C0120-01A0	14	060090
418-03-31294	C0120-01A0	15	060090
01010-81225	C0120-01A0	16	060090
124-54-26540	C0120-01A0	17	060090
419-03-31220	C0120-01A0	18	060090
419-03-32191	C0120-01A0	19	060090
418-03-32261	C0120-01A0	20	060090
419-03-B2070	C0120-01A1	1	060100
419-03-32122	C0120-01A1	2	060100
419-03-B2010	C0120-01A1	3	060100
418-03-32180	C0120-01A1	4	060100
419-03-B2060	C0120-01A1	5	060100
419-03-B2050	C0120-01A1	6	060100
418-03-32153	C0120-01A1	7	060100
418-03-32160	C0120-01A1	8	060100
07289-00070	C0120-01A1	9	060100
07289-00055	C0120-01A1	10	060100
07299-00070	C0120-01A1	11	060100
418-03-31251	C0120-01A1	12	060100
01010-81225	C0120-01A1	13	060100
01643-31232	C0120-01A1	14	060100
418-03-31294	C0120-01A1	15	060100
01010-81225	C0120-01A1	16	060100
124-54-26540	C0120-01A1	17	060100
419-03-31220	C0120-01A1	18	060100
419-03-32191	C0120-01A1	19	060100
418-03-32261	C0120-01A1	20	060100
419-14-31251	C0400-01A0A	1	060110
02896-21012	C0400-01A0A	2	060110
419-14-31330	C0400-01A0A	3	060110
01010-81025	C0400-01A0A	4	060110
01643-31032	C0400-01A0A	5	060110
02896-21012	C0400-01A0A	6	060110
42A-16-11210	C0400-01A0A	7	060110
04434-52712	C0400-01A0A	8	060110
07095-20420	C0400-01A0A	9	060110

PARTS Nº	FIG. Nº	INDEX	PAGE
04434-51912	C0400-01A0A	10	060110
01010-81020	C0400-01A0A	11	060110
01643-31032	C0400-01A0A	12	060110
04434-51912	C0400-01A0A	13	060110
01010-81020	C0400-01A0A	14	060110
01643-31032	C0400-01A0A	15	060110
04435-51912	C0400-01A0A	16	060110
01010-81020	C0400-01A0A	17	060110
01643-31032	C0400-01A0A	18	060110
286-90-13410	C0400-01A0A	19	060110
419-04-31118	D0100-01A0	1	090010
419-04-31117	D0100-01A0	1	090010
07056-18422	D0100-01A0	2	090010
417-04-21230	D0100-01A0	2	090010
423-04-11362	D0100-01A0	3	090010
418-04-31133	D0100-01A0	4	090010
01023-10510	D0100-01A0	5	090010
04434-50610	D0100-01A0	6	090010
01010-80812	D0100-01A0	7	090010
01643-30823	D0100-01A0	8	090010
418-04-31220	D0100-01A0	9	090010
07700-50240	D0100-01A0	10	090010
363-04-11130	D0100-01A0	10	090010
417-04-10140	D0100-01A0	11	090010
01010-80816	D0100-01A0	12	090010
01643-30823	D0100-01A0	13	090010
07217-71013	D0100-01A0	14	090010
419-04-31212	D0100-01A0	15	090010
419-04-31242	D0100-01A0	16	090010
419-04-31232	D0100-01A0	17	090010
07270-21085	D0100-01A0	18	090010
07285-00080	D0100-01A0	19	090010
11Y-09-11140	D0100-01A0	20	090010
07285-00130	D0100-01A0	21	090010
419-04-31250	D0100-01A0	22	090010
07285-00130	D0100-01A0	23	090010
418-04-31210	D0100-01A0	24	090010
418-04-31220	D0100-01A0	25	090010
01023-10510	D0100-01A0	26	090010
01010-81635	D0100-01A0	27	090010
01010-81635	D0100-01A0	28	090010
01010-81665	D0100-01A0	29	090010
421-70-11280	D0100-01A0	30	090010
04434-51510	D0100-01A0	31	090010
01010-81020	D0100-01A0	32	090010
01643-31032	D0100-01A0	33	090010
04434-52310	D0100-01A0	34	090010
01010-81020	D0100-01A0	35	090010
01643-31032	D0100-01A0	36	090010
04434-51410	D0100-01A0	37	090010
01010-81020	D0100-01A0	38	090010
01643-31032	D0100-01A0	39	090010
07285-00080	D0100-01A0	40	090010
04434-52310	D0100-01A0	41	090010
11Y-09-11140	D0100-01A0	42	090010
04434-52711	D0100-01A0	43	090010
01010-81020	D0100-01A0	44	090010
01643-31032	D0100-01A0	45	090010
04434-51010	D0100-01A0	46	090010
01010-81020	D0100-01A0	47	090010
01643-31032	D0100-01A0	48	090010
6738-71-9110	D0100-03A0	1	090020
07000-11006	D0100-03A0	2	090020
07000-11007	D0100-03A0	3	090020
07000-12065	D0100-03A0	4	090020
22U-04-21260	D0100-03A0	5	090020
01010-81030	D0100-03A0	6	090020
01643-31032	D0100-03A0	7	090020
419-04-31223	D0100-03A0	8	090020
07270-20760	D0100-03A0	9	090020
07285-00100	D0100-03A0	10	090020
6204-73-5750	D0100-03A0	11	090020
07005-01412	D0100-03A0	12	090020
07206-31014	D0100-03A0	13	090020
11Y-09-11140	D0100-03A0	14	090020
6144-71-5760	D0100-03A0	15	090020
07005-01412	D0100-03A0	16	090020
07206-31014	D0100-03A0	17	090020
11Y-09-11140	D0100-03A0	18	090020
134-06-61550	E0110-01A1	1	120010
134-06-61460	E0110-01A1	1	120010
08000-00000	E0110-01A1	1	120010
08000-00001	E0110-01A1	1	120010
419-06-31114	E0120-01A1	1	120020
01010-81020	E0120-01A1	2	120020
01643-31032	E0120-01A1	3	120020
415-54-11980	E0120-01A1	4	120020
419-06-31521	E0120-01A1	5	120020
01010-81020	E0120-01A1	6	120020
01643-31032	E0120-01A1	7	120020
421-06-24230	E0120-01A1	8	120020
01641-20812	E0120-01A1	9	120020
04052-10833	E0120-01A1	10	120020
421-09-12322	E0120-01A1	11	120020
01220-40410	E0120-01A1	12	120020
01220-40410	E0120-01A1	13	120020
01641-20405	E0120-01A1	14	120020
01640-20408	E0120-01A1	15	120020
09415-03614	E0120-01A1	16	120020
09415-00706	E0120-01A1	17	120020
419-06-31124	E0120-01A1	18	120020
01010-81020	E0120-01A1	19	120020
01643-31032	E0120-01A1	20	120020
01643-31032	E0120-01A1	21	120020
419-06-31531	E0120-01A1	22	120020
01010-81020	E0120-01A1	23	120020
01643-31032	E0120-01A1	24	120020
421-06-24230	E0120-01A1	25	120020
01641-20812	E0120-01A1	26	120020
04052-10833	E0120-01A1	27	120020
421-09-12322	E0120-01A1	28	120020
01220-40410	E0120-01A1	29	120020
01220-40410	E0120-01A1	30	120020
01641-20405	E0120-01A1	31	120020
01640-20408	E0120-01A1	32	120020
09415-03614	E0120-01A1	33	120020
09415-00706	E0120-01A1	34	120020
01580-10806	E0120-01A1	38	120020
419-06-31370	E0120-01A1	39	120020
08007-03549	E0120-01A1	40	120020
418-06-31541	E0120-02A2	1	120030
01010-D1020	E0120-02A2	2	120030
01643-71032	E0120-02A2	3	120030
418-06-33230	E0120-02A2	4	120030
23A-06-21410	E0120-02A2	5	120030
23A-06-21420	E0120-02A2	6	120030
23A-06-21430	E0120-02A2	7	120030
08105-12420	E0120-02A2	8	120030
08104-12420	E0120-02A2	9	120030
08110-12410	E0120-02A2	10	120030
23A-06-21440	E0120-02A2	11	120030
418-06-33260	E0120-02A2	12	120030
23A-06-21510	E0120-02A2	13	120030
23A-06-21520	E0120-02A2	14	120030
23A-06-21530	E0120-02A2	15	120030
08105-12420	E0120-02A2	16	120030
08104-12420	E0120-02A2	17	120030
08110-12410	E0120-02A2	18	120030
23A-06-21440	E0120-02A2	19	120030
419-06-23420	E0120-02A2	20	120030
01010-D1020	E0120-02A2	21	120030
01643-71032	E0120-02A2	22	120030
08037-03614	E0120-02A2	23	120030
01010-D1020	E0120-02A2	24	120030
01643-71032	E0120-02A2	25	120030
419-06-32181	E0200-01A3	1	120040
419-06-31770	E0200-01A3	2	120040
418-06-12430	E0200-01A3	3	120040
04434-51712	E0200-01A3	4	120040
04434-51912	E0200-01A3	5	120040
04434-52512	E0200-01A3	6	120040
04434-51012	E0200-01A3	7	120040
01010-81020	E0200-01A3	8	120040
01643-31032	E0200-01A3	9	120040
423-06-32280	E0200-01A3	10	120040
07283-33450	E0200-01A3	11	120040
07283-53444	E0200-01A3	12	120040
01643-31032	E0200-01A3	13	120040
01597-01009	E0200-01A3	14	120040
01010-81016	E0200-01A3	15	120040
01643-31032	E0200-01A3	16	120040
08193-21012	E0200-01A3	17	120040
426-09-11210	E0200-01A3	18	120040
08191-00770	E0200-01A3	19	120040
08192-22100	E0200-01A3	20	120040
8A13-10-2100	E0201-01A0	1	120050
8A13-10-1310	E0201-01A0	2	120050
8A13-10-2310	E0201-01A0	2	120050
418-925-3490	E0201-01A0	3	120050
01010-80816	E0201-01A0	4	120050
01643-30823	E0201-01A0	5	120050
7826-20-7035	E0201-01A0	6	120050
7826-20-7034	E0201-01A0	6	120050
7826-20-7033	E0201-01A0	6	120050
7826-20-7031	E0201-01A0	6	120050
01010-80825	E0201-01A0	7	120050
01643-30823	E0201-01A0	8	120050
419-54-32681	E0201-01A0	8A	120050
01010-80816	E0201-01A0	8B	120050
01010-80823	E0201-01A0	8B	120050
01643-30823	E0201-01A0	8C	120050
419-06-31392	E0201-01A0	9	120050
569-06-61960	E0201-01A0	10	120050
287-06-16420	E0201-01A0	11	120050
01010-80610	E0201-01A0	12	120050
01643-30623	E0201-01A0	13	120050
7826-20-9311	E0201-01A0	14	120050
7826-20-9310	E0201-01A0	14	120050
8A13-10-1410	E0201-01A0	15	120050
08059-00310	E0201-01A0	15A	120050
21J-54-14782	E0201-01A0	16	120050
08034-40521	E0201-01A0	17	120050
421-925-3180	E0201-01A0	18	120050
08017-30710	E0201-01A0	19	120050
01435-01020	E0201-01A0	20	120050
01643-31032	E0201-01A0	21	120050
363-54-31450	E0201-01A0	22	120050
419-54-32681	E0201-01A0A	1	120060
01010-80816	E0201-01A0A	2	120060
01643-30823	E0201-01A0A	3	120060
7826-20-7038	E0201-01A0A	4	120060
7826-20-7037	E0201-01A0A	4	120060
7826-20-7036	E0201-01A0A	4	120060
7826-20-7035	E0201-01A0A	4	120060
01010-80825	E0201-01A0A	5	120060
01643-30823	E0201-01A0A	6	120060
419-06-31393	E0201-01A0A	7	120060
569-06-61960	E0201-01A0A	8	120060
287-06-16420	E0201-01A0A	9	120060
01010-80816	E0201-01A0A	10	120060
01643-30823	E0201-01A0A	11	120060
421-06-22820	E0201-01A0A	12	120060
421-06-22840	E0201-01A0A	13	120060
421-06-22880	E0201-01A0A	14	120060
421-06-22910	E0201-01A0A	15	120060
421-06-22920	E0201-01A0A	16	120060
08037-10610	E0201-01A0A	17	120060
08017-C0706	E0201-01A0A	18	120060
8A13-10-1320	E0201-01A0A	19	120060
8A13-10-1310	E0201-01A0A	19	120060
423-92-33520	E0201-01A0A	20	120060
01010-80816	E0201-01A0A	21	120060
8A13-10-2100	E0201-01A0A	23	120060
01640-21626	E0201-01A0A	24	120060
421-925-3180	E0201-01A0A	25	120060
01435-01020	E0201-01A0A	26	120060
01643-31032	E0201-01A0A	27	120060
363-54-31450	E0201-01A0A	28	120060
08034-40521	E0201-01A0A	29	120060
419-06-32345	E0202-01A0	1	120070
419-06-32242	E0202-01A0	2	120070
08037-03620	E0202-01A0	3	120070
22U-54-13260	E0202-01A0	4	120070
04434-52312	E0202-01A0	5	120070
04434-51812	E0202-01A0	6	120070
04434-51512	E0202-01A0	7	120070
04434-51012	E0202-01A0	8	120070
04434-51712	E0202-01A0	9	120070
07095-20211	E0202-01A0	10	120070
01010-81020	E0202-01A0	11	120070
01643-31032	E0202-01A0	12	120070
08193-21012	E0202-01A0	13	120070
01010-81020	E0202-01A0	14	120070
01643-31032	E0202-01A0	15	120070
01010-81016	E0202-01A0	16	120070
01643-31032	E0202-01A0	17	120070
04434-51412	E0202-01A0	18	120070
04434-52112	E0202-01A0	19	120070
07095-20314	E0202-01A0	20	120070
01010-81020	E0202-01A0	21	120070
01643-31032	E0202-01A0	22	120070
04434-52312	E0202-01A0	23	120070
01010-81020	E0202-01A0	24	120070
01643-31032	E0202-01A0	25	120070
08088-30000	E0202-02A0	1	120080
600-815-9270	E0202-02A0	2	120080
600-815-7870	E0202-02A0	3	120080
01010-80830	E0202-02A0	4	120080
01643-30823	E0202-02A0	5	120080
421-06-22830	E0202-02A0	6	120080
421-06-22820	E0202-02A0	7	120080
421-06-22840	E0202-02A0	8	120080
421-06-22880	E0202-02A0	9	120080
421-06-22910	E0202-02A0	10	120080
421-06-22920	E0202-02A0	11	120080
01010-80820	E0202-02A0	12	120080
01643-30823	E0202-02A0	13	120080
418-06-32414	E0202-02A0	14	120080
01010-81025	E0202-02A0	15	120080
01643-31032	E0202-02A0	16	120080
418-06-31591	E0202-02A0	17	120080
01010-80816	E0202-02A0	18	120080
01643-30823	E0202-02A0	19	120080
01010-80616	E0202-02A0	20	120080
01643-30623	E0202-02A0	21	120080
419-06-32332	E0202-02A0	22	120080
08038-00519	E0202-02A0	23	120080
08038-00518	E0202-02A0	24	120080
419-06-32263	E0202-02A0	25	120080
08038-06031	E0202-02A0	26	120080
419-06-32230	E0202-03A0	1	120090
08028-AD045	E0202-03A0	2	120090
14X-06-12280	E0202-03A0	3	120090
21J-06-11570	E0202-03A0	4	120090
14X-06-12270	E0202-03A0	5	120090
01010-81020	E0202-03A0	6	120090
01643-31032	E0202-03A0	7	120090
418-06-31423	E0202-03A0	8	120090
418-06-31422	E0202-03A0	8	120090
01010-81020	E0202-03A0	9	120090
01643-31032	E0202-03A0	10	120090
418-06-31432	E0202-03A0	11	120090
01010-80816	E0202-03A0	12	120090
01643-30823	E0202-03A0	13	120090
04434-51012	E0202-03A0	14	120090
01010-80820	E0202-03A0	15	120090

PARTS Nº	FIG. Nº	INDEX	PAGE
01643-31032	E0202-03A0	16	120090
419-06-32366	E0202-04A0	1	120100
419-06-32365	E0202-04A0	1	120100
08193-21012	E0202-04A0	2	120100
01010-81220	E0202-04A0	3	120100
01643-31232	E0202-04A0	4	120100
01010-81020	E0202-04A0	5	120100
01643-31032	E0202-04A0	6	120100
04434-51912	E0202-04A0	7	120100
04434-51012	E0202-04A0	8	120100
04435-51012	E0202-04A0	9	120100
04434-52712	E0202-04A0	10	120100
07095-20420	E0202-04A0	11	120100
04434-51512	E0202-04A0	12	120100
08034-20414	E0202-04A0	13	120100
08192-22100	E0202-06A3	1	120110
08191-00770	E0202-06A3	2	120110
01010-81025	E0202-08A0	1	120120
01643-31032	E0202-08A0	2	120120
418-06-31591	E0202-08A0	3	120120
01010-80825	E0202-08A0	4	120120
01010-80816	E0202-08A0	4	120120
418-06-31790	E0202-08A0	5	120120
154-61-16570	E0202-08A0	6	120120
01643-30823	E0202-08A0	6	120120
203-54-55660	E0202-08A0	7	120120
08038-06031	E0202-08A0	8	120120
418-06-33212	E0300-01A1	1	120130
418-06-33441	E0300-01A1	2	120130
418-06-33460	E0300-01A1	3	120130
418-06-33430	E0300-01A1	4	120130
418-06-33451	E0300-01A1	5	120130
418-06-33420	E0300-01A1	6	120130
418-06-33410	E0300-01A1	7	120130
424-06-23230	E0300-01A1	8	120130
08055-10612	E0300-01A1	9	120130
08055-10630	E0300-01A1	10	120130
418-06-33470	E0300-01A1	11	120130
418-06-33480	E0300-01A1	12	120130
418-06-33222	E0300-01A1	13	120130
418-06-33441	E0300-01A1	14	120130
418-06-33460	E0300-01A1	15	120130
418-06-33430	E0300-01A1	16	120130
418-06-33451	E0300-01A1	17	120130
418-06-33420	E0300-01A1	18	120130
418-06-33410	E0300-01A1	19	120130
424-06-23230	E0300-01A1	20	120130
08055-10612	E0300-01A1	21	120130
08055-10630	E0300-01A1	22	120130
418-06-33470	E0300-01A1	23	120130

PARTS Nº	FIG. Nº	INDEX	PAGE
418-06-33480	E0300-01A1	24	120130
207-54-16860	E0300-01A1	25	120130
209-09-11340	E0300-01A1	26	120130
419-06-33210	E0300-01A1	27	120130
419-06-33220	E0300-01A1	28	120130
01010-81230	E0300-01A1	29	120130
01643-31232	E0300-01A1	30	120130
09415-03614	E0300-01A1	31	120130
01010-80612	E0300-01A1	32	120130
01023-10612	E0300-01A1	32	120130
01643-30623	E0300-01A1	33	120130
418-06-33191	E0300-01A1	34	120130
08160-72400	E0410-01A1	1	120140
08160-72420	E0410-01A1	2	120140
01010-80820	E0410-01A1	3	120140
01643-30823	E0410-01A1	4	120140
419-06-31411	E0410-01A1	5	120140
01010-81025	E0410-01A1	6	120140
01643-31032	E0410-01A1	7	120140
04434-51012	E0410-01A1	8	120140
01010-81020	E0410-01A1	9	120140
01643-31032	E0410-01A1	10	120140
419-06-31420	E0410-01A1	11	120140
419-17-31003	F2420-01A0	1	150010
419-17-31002	F2420-01A0	1	150010
419-14-31110	F2420-01A0	2	150010
419-14-31120	F2420-01A0	3	150010
01010-81650	F2420-01A0	4	150010
01643-31645	F2420-01A0	5	150010
418-18-32112	F2420-01A0	6	150010
419-18-32241	F2420-01A0	7	150010
419-18-32240	F2420-01A0	7	150010
6136-21-7120	F2420-01A0	8	150010
6136-21-7180	F2420-01A0	8	150010
6136-21-7190	F2420-01A0	9	150010
07000-A2065	F2420-01A0	10	150010
01010-81045	F2420-01A0	11	150010
01643-31032	F2420-01A0	12	150010
418-18-31502	F2420-01A0	13	150010
418-18-31501	F2420-01A0	13	150010
417-979-2110	F2420-02A2	1	150020
6136-21-7180	F2420-02A2	1	150020
419-17-31003	F2420-51A0	1	150030
419-17-31002	F2420-51A0	1	150030
419-17-31103	F2420-51A0	1	150030
419-17-31102	F2420-51A0	1	150030
419-17-31113	F2420-51A0	1	150030
419-17-31112	F2420-51A0	1	150030
419-17-31122	F2420-51A0	2	150030
01010-81235	F2420-51A0	3	150030

PARTS Nº	FIG. Nº	INDEX	PAGE
418-17-32811	F2420-51A0	4	150030
01010-81235	F2420-51A0	5	150030
07043-A0211	F2420-51A0	6	150030
07044-12412	F2420-51A0	7	150030
07002-12434	F2420-51A0	8	150030
07030-00252	F2420-51A0	9	150030
09608-05080	F2420-51A0	10	150030
04418-13060	F2420-51A0	11	150030
07049-01215	F2420-51A0	12	150030
07049-01620	F2420-51A0	13	150030
04020-01228	F2420-51A0	14	150030
419-17-31003	F2420-52A0	1	150040
419-17-31002	F2420-52A0	1	150040
418-17-39710	F2420-52A0	1	150040
714-16-19730	F2420-52A0	2	150040
419-17-32710	F2420-52A0	3	150040
714-12-12610	F2420-52A0	4	150040
419-15-12140	F2420-52A0	5	150040
419-17-32620	F2420-52A0	6	150040
04020-01228	F2420-52A0	7	150040
04071-00200	F2420-52A0	8	150040
418-17-32713	F2420-52A0	9	150040
419-17-32700	F2420-52A0	10	150040
07000-A6165	F2420-52A0	11	150040
07000-A6210	F2420-52A0	12	150040
419-17-31142	F2420-52A0	13	150040
418-17-31163	F2420-52A0	14	150040
07000-A5220	F2420-52A0	15	150040
01011-61605	F2420-52A0	16	150040
419-17-32112	F2420-52A0	17	150040
06040-06012	F2420-52A0	18	150040
04065-09530	F2420-52A0	19	150040
06040-06010	F2420-52A0	20	150040
04064-05020	F2420-52A0	21	150040
04065-08025	F2420-52A0	22	150040
06043-06010	F2420-52A0	23	150040
07018-00251	F2420-52A0	24	150040
07000-A2055	F2420-52A0	25	150040
419-17-32820	F2420-52A0	26	150040
07018-00904	F2420-52A0	27	150040
712-85-12570	F2420-52A0	28	150040
07000-73025	F2420-52A0	29	150040
01010-81275	F2420-52A0	30	150040
01643-51232	F2420-52A0	31	150040
419-17-31003	F2420-53A0	1	150050
419-17-31002	F2420-53A0	1	150050
419-17-32212	F2420-53A0	1	150050
23A-15-12410	F2420-53A0	2	150050
419-17-32612	F2420-53A0	3	150050
419-17-32312	F2420-53A0	4	150050

PARTS Nº	FIG. Nº	INDEX	PAGE
419-17-32511	F2420-53A0	5	150050
419-17-39310	F2420-53A0	6	150050
418-17-32570	F2420-53A0	7	150050
04260-00635	F2420-53A0	8	150050
04020-01228	F2420-53A0	9	150050
419-17-33212	F2420-53A0	10	150050
14Y-22-13270	F2420-53A0	11	150050
01252-61470	F2420-53A0	12	150050
418-17-39321	F2420-53A0	13	150050
419-17-31003	F2420-54A0	1	150060
419-17-31002	F2420-54A0	1	150060
419-17-33221	F2420-54A0	1	150060
06040-06213	F2420-54A0	2	150060
04065-01204	F2420-54A0	3	150060
04065-09530	F2420-54A0	3	150060
419-17-33230	F2420-54A0	4	150060
419-17-33410	F2420-54A0	5	150060
01010-81225	F2420-54A0	6	150060
01643-31232	F2420-54A0	7	150060
419-17-32121	F2420-54A0	8	150060
711-90-11131	F2420-54A0	9	150060
417-17-32132	F2420-54A0	10	150060
418-17-39330	F2420-54A0	11	150060
418-17-39340	F2420-54A0	12	150060
418-17-33312	F2420-54A0	13	150060
419-17-33320	F2420-54A0	14	150060
07012-50075	F2420-54A0	15	150060
419-15-13660	F2420-54A0	16	150060
423-22-11240	F2420-54A0	17	150060
01010-61680	F2420-54A0	18	150060
01643-31645	F2420-54A0	19	150060
07000-72055	F2420-54A0	20	150060
418-17-33420	F2420-54A0	21	150060
418-17-33430	F2420-54A0	22	150060
418-17-33440	F2420-54A0	23	150060
418-17-31132	F2420-54A0	24	150060
01010-81235	F2420-54A0	25	150060
07000-75130	F2420-54A0	26	150060
419-17-31003	F2420-55A0	1	150070
419-17-31002	F2420-55A0	1	150070
418-17-38115	F2420-55A0	1	150070
01010-80812	F2420-55A0	2	150070
01643-30823	F2420-55A0	3	150070
418-17-38160	F2420-55A0	4	150070
418-17-38210	F2420-55A0	5	150070
04064-06020	F2420-55A0	6	150070
418-17-38221	F2420-55A0	7	150070
418-17-38170	F2420-55A0	8	150070
418-17-39710	F2420-55A0	9	150070
56D-15-12710	F2420-55A0	10	150070

PARTS Nº	FIG. Nº	INDEX	PAGE
418-17-38521	F2420-55A0	11	150070
714-11-18340	F2420-55A0	12	150070
418-17-38134	F2420-55A0	13	150070
04020-01228	F2420-55A0	14	150070
01010-81235	F2420-55A0	15	150070
01010-81285	F2420-55A0	16	150070
01011-81255	F2420-55A0	17	150070
418-17-38142	F2420-55A0	18	150070
714-11-19810	F2420-55A0	19	150070
06120-02520	F2420-55A0	20	150070
418-17-38150	F2420-55A0	21	150070
714-09-16282	F2420-55A0	22	150070
01252-30816	F2420-55A0	23	150070
124-15-51740	F2420-55A0	24	150070
418-17-38120	F2420-55A0	25	150070
07000-73042	F2420-55A0	26	150070
01010-81235	F2420-55A0	27	150070
419-18-31103	F2430-01A0	1	150080
419-18-31102	F2430-01A0	1	150080
01010-81240	F2430-01A0	2	150080
175-54-34170	F2430-01A0	3	150080
01010-81650	F2430-01A0	4	150080
418-18-31160	F2430-01A0	5	150080
419-18-31201	F2430-01A0	6	150080
07000-A5185	F2430-01A0	7	150080
01010-81655	F2430-01A0	8	150080
01643-31645	F2430-01A0	9	150080
419-18-31301	F2430-01A0	10	150080
07000-A5185	F2430-01A0	11	150080
01010-81655	F2430-01A0	12	150080
01643-31645	F2430-01A0	13	150080
418-06-36210	F2430-01A0	14	150080
07000-12011	F2430-01A0	15	150080
419-18-31103	F2430-01A0A	1	150085
01010-81240	F2430-01A0A	2	150085
175-54-34170	F2430-01A0A	3	150085
01010-81650	F2430-01A0A	4	150085
418-18-31160	F2430-01A0A	5	150085
419-18-41200	F2430-01A0A	6	150085
419-18-41650	F2430-01A0A	7	150085
07000-A5185	F2430-01A0A	8	150085
01010-81655	F2430-01A0A	9	150085
01643-31645	F2430-01A0A	10	150085
419-18-41300	F2430-01A0A	11	150085
419-18-41650	F2430-01A0A	12	150085
418-18-41450	F2430-01A0A	13	150085
418-18-41460	F2430-01A0A	14	150085
418-18-41470	F2430-01A0A	15	150085
418-18-41480	F2430-01A0A	16	150085
07000-A5185	F2430-01A0A	17	150085

PARTS Nº	FIG. Nº	INDEX	PAGE
01010-81655	F2430-01A0A	18	150085
01643-31645	F2430-01A0A	19	150085
418-06-36210	F2430-01A0A	20	150085
07000-12011	F2430-01A0A	21	150085
07260-03236	F2760-01A0	1	150090
07289-00045	F2760-01A0	2	150090
419-18-31183	F2760-01A0	3	150090
07000-13044	F2760-01A0	4	150090
02782-10630	F2760-01A0	5	150090
02782-1062A	F2760-01A0	6	150090
07002-12434	F2760-01A0	7	150090
418-18-32350	F2760-01A0	8	150090
419-18-31282	F2760-01A0	9	150090
02781-00628	F2760-01A0	10	150090
07002-62434	F2760-01A0	11	150090
07000-13024	F2760-01A0	12	150090
07000-B3024	F2760-01A0	13	150090
02896-11018	F2760-01A0	14	150090
02896-61018	F2760-01A0	15	150090
419-18-32164	F2760-01A0	16	150090
419-18-32262	F2760-01A0	17	150090
56B-43-17360	F2760-01A0	18	150090
419-18-31252	F2760-01A0	19	150090
07000-13024	F2760-01A0	20	150090
419-18-32172	F2760-01A0	21	150090
419-18-32182	F2760-01A0	22	150090
02896-11018	F2760-01A0	23	150090
02896-11015	F2760-01A0	24	150090
04434-53211	F2760-01A0	25	150090
07095-20523	F2760-01A0	26	150090
01010-81020	F2760-01A0	27	150090
01643-31032	F2760-01A0	28	150090
04434-53412	F2760-01A0	29	150090
07095-20627	F2760-01A0	30	150090
01010-81025	F2760-01A0	31	150090
01643-31032	F2760-01A0	32	150090
02781-00628	F2760-01A0	33	150090
07002-12434	F2760-01A0	34	150090
02896-11018	F2760-01A0	35	150090
419-18-B1120	F2760-02A0	1	150100
419-18-31121	F2760-02A0	1	150100
419-18-31370	F2760-02A0	2	150100
07002-14234	F2760-02A0	3	150100
01011-81420	F2760-02A0	4	150100
01643-31445	F2760-02A0	5	150100
07000-13038	F2760-02A0	6	150100
419-18-32113	F2760-02A0	7	150100
07084-012A9	F2760-02A0	8	150100
419-18-31260	F2760-02A0	9	150100
01010-81450	F2760-02A0	10	150100

PARTS Nº	FIG. Nº	INDEX	PAGE
722-13-11530	F2760-02A0	11	150100
07000-13038	F2760-02A0	12	150100
419-18-B1130	F2760-02A0	13	150100
419-18-31131	F2760-02A0	13	150100
419-18-31210	F2760-02A0	14	150100
01011-81435	F2760-02A0	15	150100
01643-31445	F2760-02A0	16	150100
07002-14234	F2760-02A0	17	150100
07000-13038	F2760-02A0	18	150100
419-18-32113	F2760-02A0	19	150100
419-18-32142	F2760-02A0	20	150100
419-18-31260	F2760-02A0	21	150100
01010-81450	F2760-02A0	22	150100
722-13-11530	F2760-02A0	23	150100
418-18-34110	F2760-03A0	1	150110
418-18-34160	F2760-03A0	1	150110
415-18-11150	F2760-03A0	2	150110
415-18-11160	F2760-03A0	3	150110
01010-80825	F2760-03A0	4	150110
01643-30823	F2760-03A0	5	150110
21W-973-4280	F2760-03A0	6	150110
02782-10516	F2760-03A0	7	150110
02781-00516	F2760-03A0	8	150110
07002-12034	F2760-03A0	9	150110
02896-11015	F2760-03A0	10	150110
419-19-32251	F2760-03A0	11	150110
419-18-32152	F2760-03A0	12	150110
56B-43-17781	F2760-03A0	13	150110
07000-13024	F2760-03A0	14	150110
419-18-31190	F2760-03A0	15	150110
07000-13029	F2760-03A0	16	150110
02783-10522	F2760-03A0	17	150110
07002-22434	F2760-03A0	18	150110
02782-10516	F2760-03A0	19	150110
07002-22034	F2760-03A0	20	150110
02896-21015	F2760-03A0	21	150110
419-18-32194	F2760-03A0	22	150110
02782-10420	F2760-03A0	23	150110
419-18-31430	F2760-03A0	24	150110
07002-21823	F2760-03A0	25	150110
02896-21012	F2760-03A0	26	150110
02781-00422	F2760-03A0	27	150110
07002-22034	F2760-03A0	28	150110
419-14-31261	F2760-03A0	29	150110
02896-21012	F2760-03A0	30	150110
04434-52511	F2760-03A0	31	150110
04434-52712	F2760-03A0	32	150110
07095-20420	F2760-03A0	33	150110
01010-81020	F2760-03A0	34	150110
01643-31032	F2760-03A0	35	150110

PARTS Nº	FIG. Nº	INDEX	PAGE
04434-52712	F2760-03A0	36	150110
07095-20420	F2760-03A0	37	150110
42A-16-11210	F2760-03A0	38	150110
01010-81020	F2760-03A0	39	150110
01643-31032	F2760-03A0	40	150110
419-18-31113	F2760-04A0	1	150120
07000-13029	F2760-04A0	2	150120
419-18-31141	F2760-04A0	3	150120
07289-00045	F2760-04A0	4	150120
419-18-31411	F2760-04A0	5	150120
419-18-31381	F2760-04A0	6	150120
07000-13029	F2760-04A0	7	150120
02896-11018	F2760-04A0	8	150120
02782-10628	F2760-04A0	9	150120
07002-12434	F2760-04A0	10	150120
02896-11018	F2760-04A0	11	150120
04434-53412	F2760-04A0	12	150120
07095-20627	F2760-04A0	13	150120
01010-81020	F2760-04A0	14	150120
01643-31032	F2760-04A0	15	150120
419-62-31712	F2760-05A0	1	150130
419-62-31711	F2760-05A0	1	150130
419-62-31710	F2760-05A0	1	150130
419-62-31681	F2760-05A0	2	150130
419-62-31680	F2760-05A0	2	150130
07000-12011	F2760-05A0	3	150130
07040-11007	F2760-05A0	4	150130
799-101-5220	F2760-05A0	4	150130
07002-11023	F2760-05A0	5	150130
418-20-32190	F4200-01A0	1	150140
418-20-32650	F4200-01A0	1	150140
418-20-32740	F4200-01A0	2	150140
423-20-32750	F4200-01A0	3	150140
418-20-32620	F4200-01A0	4	150140
423-20-32631	F4200-01A0	5	150140
419-20-12691	F4200-01A0	6	150140
01050-61045	F4200-01A0	7	150140
419-20-34110	F4200-02A0	1	150150
419-20-34650	F4200-02A0	1	150150
418-20-32620	F4200-02A0	2	150150
423-20-32631	F4200-02A0	3	150150
419-20-12691	F4200-02A0	4	150150
01050-61045	F4200-02A0	5	150150
419-22-30010	F4400-01A0	1	150160
419-22-12870	F4400-01A0	2	150160
01643-32460	F4400-01A0	3	150160
01011-62785	F4400-01A0	4	150160
01580-02722	F4400-01A0	5	150160
01643-32780	F4400-01A0	6	150160
419-46-37120	F4400-01A0	7	150160

PARTS Nº	FIG. Nº	INDEX	PAGE
419-22-30010	F4400-51A0	1	150170
419-22-22730	F4400-51A0	1	150170
417-22-22810	F4400-51A0	2	150170
419-22-22810	F4400-51A0	3	150170
419-22-22950	F4400-51A0	4	150170
419-22-12510	F4400-51A0	5	150170
419-22-12570	F4400-51A0	6	150170
419-22-32410	F4400-51A0	7	150170
419-22-22850	F4400-51A0	8	150170
419-22-22861	F4400-51A0	9	150170
418-22-12850	F4400-51A0	10	150170
419-22-22741	F4400-51A0	11	150170
419-22-22780	F4400-51A0	12	150170
01011-62000	F4400-51A0	13	150170
418-22-21460	F4400-51A0	14	150170
418-22-21470	F4400-51A0	14	150170
418-22-21480	F4400-51A0	14	150170
419-22-22720	F4400-51A0	15	150170
419-22-30010	F4400-52A0	1	150180
419-22-33410	F4400-52A0	1	150180
419-22-33420	F4400-52A0	2	150180
815-02-10110	F4400-52A0	3	150180
04418-13060	F4400-52A0	4	150180
419-33-31710	F4400-52A0	5	150180
421-33-31730	F4400-52A0	6	150180
421-33-31721	F4400-52A0	7	150180
01583-11610	F4400-52A0	8	150180
07000-11005	F4400-52A0	9	150180
07000-12018	F4400-52A0	10	150180
419-22-30010	F4400-53A0	1	150190
419-22-31230	F4400-53A0	1	150190
419-22-21230	F4400-53A0	1	150190
418-22-21310	F4400-53A0	2	150190
419-22-31602	F4400-53A0	3	150190
419-22-11810	F4400-53A0	5	150190
419-22-31861	F4400-53A0	6	150190
419-22-31132	F4400-53A0	7	150190
419-22-11820	F4400-53A0	8	150190
418-22-31990	F4400-53A0	9	150190
418-22-21330	F4400-53A0	10	150190
417-15-13770	F4400-53A0	11	150190
01011-61615	F4400-53A0	12	150190
07000-13042	F4400-53A0	13	150190
07000-15115	F4400-53A0	14	150190
419-22-11361	F4400-53A0	15	150190
419-22-11371	F4400-53A0	15	150190
419-22-11381	F4400-53A0	15	150190
01010-61440	F4400-53A0	16	150190
01643-31445	F4400-53A0	17	150190
07000-15180	F4400-53A0	18	150190

PARTS Nº	FIG. Nº	INDEX	PAGE
418-22-31980	F4400-53A0	19	150190
06301-06310	F4400-53A0	20	150190
418-22-31970	F4400-53A0	21	150190
04065-01104	F4400-53A0	22	150190
419-22-31890	F4400-53A0	23	150190
419-22-31931	F4400-53A0	24	150190
01010-61240	F4400-53A0	25	150190
01643-31232	F4400-53A0	26	150190
419-22-30010	F4400-54A0	1	150200
419-22-31501	F4400-54A0	1	150200
419-22-31511	F4400-54A0	1	150200
419-22-31521	F4400-54A0	2	150200
01010-61295	F4400-54A0	3	150200
01643-31232	F4400-54A0	4	150200
175-21-12180	F4400-54A0	5	150200
418-22-31410	F4400-54A0	6	150200
419-22-11421	F4400-54A0	7	150200
419-22-21430	F4400-54A0	8	150200
418-22-31550	F4400-54A0	9	150200
419-22-11631	F4400-54A0	10	150200
01010-61240	F4400-54A0	11	150200
01643-31232	F4400-54A0	12	150200
419-22-33611	F4400-54A0	13	150200
07044-13620	F4400-54A0	14	150200
07002-13634	F4400-54A0	15	150200
07043-70211	F4400-54A0	16	150200
419-33-11460	F4400-54A0	17	150200
566-32-11620	F4400-54A0	18	150200
419-22-33621	F4400-54A0	19	150200
04020-01228	F4400-54A0	20	150200
01010-61240	F4400-54A0	21	150200
01643-31232	F4400-54A0	22	150200
419-22-33921	F4400-54A0	23	150200
07030-01030	F4400-54A0	24	150200
07043-70415	F4400-54A0	25	150200
418-06-35130	F4400-54A0	26	150200
01010-61225	F4400-54A0	27	150200
01643-31232	F4400-54A0	28	150200
419-22-33811	F4400-54A0	29	150200
04434-51012	F4400-54A0	30	150200
01010-61225	F4400-54A0	31	150200
01643-31232	F4400-54A0	32	150200
419-22-21861	F4400-54A0	33	150200
419-22-11850	F4400-54A0	34	150200
419-22-21760	F4400-54A0	35	150200
419-22-21770	F4400-54A0	35	150200
419-22-21780	F4400-54A0	35	150200
419-22-21790	F4400-54A0	35	150200
418-33-21430	F4400-54A0	36	150200
01010-61240	F4400-54A0	37	150200

PARTS Nº	FIG. Nº	INDEX	PAGE
01643-31232	F4400-54A0	38	150200
419-33-21710	F4400-54A0	39	150200
419-22-31710	F4400-54A0	40	150200
01010-61225	F4400-54A0	41	150200
01643-31232	F4400-54A0	42	150200
419-22-30010	F4400-55A0	1	150210
419-33-21761	F4400-55A0	1	150210
418-33-21340	F4400-55A0	2	150210
419-33-21720	F4400-55A0	3	150210
419-33-21420	F4400-55A0	4	150210
419-33-31750	F4400-55A0	5	150210
419-33-21740	F4400-55A0	6	150210
01252-30816	F4400-55A0	7	150210
154-61-16570	F4400-55A0	8	150210
419-22-30010	F4400-56A0	1	150220
04020-01228	F4400-56A0	1	150220
01011-61675	F4400-56A0	2	150220
01643-31645	F4400-56A0	3	150220
419-22-33250	F4400-56A0	4	150220
07002-13034	F4400-56A0	5	150220
419-22-30010	F4400-57A0	1	150230
418-43-37302	F4400-57A0	1	150230
07000-12040	F4400-57A0	2	150230
01010-61290	F4400-57A0	3	150230
01643-31232	F4400-57A0	4	150230
07040-11409	F4400-57A0	5	150230
07002-11423	F4400-57A0	6	150230
417-43-18380	F4460-01A1	1	150240
416-22-26260	F4460-01A1	2	150240
01641-20812	F4460-01A1	3	150240
04205-11028	F4460-01A1	4	150240
01641-21016	F4460-01A1	5	150240
04050-13020	F4460-01A1	6	150240
04434-51912	F4460-01A1	7	150240
07095-20213	F4460-01A1	8	150240
01010-81020	F4460-01A1	9	150240
01643-31032	F4460-01A1	10	150240
42A-16-11231	F4460-01A1	11	150240
01010-81020	F4460-01A1	12	150240
01643-31032	F4460-01A1	13	150240
419-22-36211	F4460-01A1	14	150240
01010-81695	F4460-01A1	15	150240
01643-31645	F4460-01A1	16	150240
07049-01620	F4460-01A1	17	150240
418-22-36190	F4460-01A1	18	150240
424-43-11240	F4460-01A1	19	150240
01584-00605	F4460-01A1	20	150240
07040-12012	F4460-01A1	21	150240
07002-12034	F4460-01A1	22	150240
419-23-30010	F4500-01A0	1	150250

PARTS Nº	FIG. Nº	INDEX	PAGE
419-22-12870	F4500-01A0	2	150250
01643-32460	F4500-01A0	3	150250
419-23-30010	F4500-51A0	1	150260
419-22-22730	F4500-51A0	1	150260
417-22-22810	F4500-51A0	2	150260
419-22-22810	F4500-51A0	3	150260
419-22-22950	F4500-51A0	4	150260
419-22-12510	F4500-51A0	5	150260
419-22-12570	F4500-51A0	6	150260
419-22-32410	F4500-51A0	7	150260
419-22-22850	F4500-51A0	8	150260
419-22-22861	F4500-51A0	9	150260
418-22-12850	F4500-51A0	10	150260
419-22-22741	F4500-51A0	11	150260
419-22-22780	F4500-51A0	12	150260
01011-62000	F4500-51A0	13	150260
418-22-21460	F4500-51A0	14	150260
418-22-21470	F4500-51A0	14	150260
418-22-21480	F4500-51A0	14	150260
419-22-22720	F4500-51A0	15	150260
419-23-30010	F4500-52A0	1	150270
419-23-33410	F4500-52A0	1	150270
419-23-33420	F4500-52A0	2	150270
815-02-10110	F4500-52A0	3	150270
04418-13060	F4500-52A0	4	150270
419-33-31710	F4500-52A0	5	150270
421-33-31730	F4500-52A0	6	150270
421-33-31721	F4500-52A0	7	150270
01583-11610	F4500-52A0	8	150270
07000-11005	F4500-52A0	9	150270
07000-12018	F4500-52A0	10	150270
419-23-30010	F4500-53A0	1	150280
419-22-31230	F4500-53A0	1	150280
419-22-21230	F4500-53A0	1	150280
418-22-21310	F4500-53A0	2	150280
419-22-21800	F4500-53A0	3	150280
419-22-21611	F4500-53A0	3	150280
419-22-21820	F4500-53A0	4	150280
419-22-11810	F4500-53A0	5	150280
419-23-21631	F4500-53A0	6	150280
419-22-11820	F4500-53A0	7	150280
418-22-21330	F4500-53A0	8	150280
423-22-11240	F4500-53A0	9	150280
01011-61615	F4500-53A0	10	150280
07000-13042	F4500-53A0	11	150280
07000-15180	F4500-53A0	12	150280
419-22-11361	F4500-53A0	13	150280
419-22-11371	F4500-53A0	13	150280
419-22-11381	F4500-53A0	13	150280
419-22-11391	F4500-53A0	13	150280

PARTS Nº	FIG. Nº	INDEX	PAGE
01010-61440	F4500-53A0	14	150280
01643-31445	F4500-53A0	15	150280
419-23-30010	F4500-54A0	1	150290
419-22-31501	F4500-54A0	1	150290
419-22-31511	F4500-54A0	1	150290
419-22-31521	F4500-54A0	2	150290
01010-61295	F4500-54A0	3	150290
01643-31232	F4500-54A0	4	150290
175-21-12180	F4500-54A0	5	150290
418-22-31410	F4500-54A0	6	150290
419-22-11421	F4500-54A0	7	150290
419-22-21430	F4500-54A0	8	150290
418-22-31550	F4500-54A0	9	150290
419-22-11631	F4500-54A0	10	150290
01010-61240	F4500-54A0	11	150290
01643-31232	F4500-54A0	12	150290
419-23-33611	F4500-54A0	13	150290
423-23-23170	F4500-54A0	14	150290
07044-13620	F4500-54A0	15	150290
07002-13634	F4500-54A0	16	150290
07043-70211	F4500-54A0	17	150290
419-33-11460	F4500-54A0	18	150290
566-32-11620	F4500-54A0	19	150290
419-22-33621	F4500-54A0	20	150290
04020-01228	F4500-54A0	21	150290
01010-61240	F4500-54A0	22	150290
01643-31232	F4500-54A0	23	150290
419-22-33921	F4500-54A0	24	150290
07030-01030	F4500-54A0	25	150290
07043-70415	F4500-54A0	26	150290
419-22-21861	F4500-54A0	27	150290
419-22-11850	F4500-54A0	28	150290
419-22-21760	F4500-54A0	29	150290
419-22-21770	F4500-54A0	29	150290
419-22-21780	F4500-54A0	29	150290
419-22-21790	F4500-54A0	29	150290
418-33-21430	F4500-54A0	30	150290
01010-61240	F4500-54A0	31	150290
01643-31232	F4500-54A0	32	150290
419-33-21710	F4500-54A0	33	150290
419-22-31710	F4500-54A0	34	150290
01010-61225	F4500-54A0	35	150290
01643-31232	F4500-54A0	36	150290
419-23-30010	F4500-55A0	1	150300
419-33-21761	F4500-55A0	1	150300
418-33-21340	F4500-55A0	2	150300
419-33-21720	F4500-55A0	3	150300
419-33-21420	F4500-55A0	4	150300
419-33-31750	F4500-55A0	5	150300
419-33-21740	F4500-55A0	6	150300

PARTS Nº	FIG. Nº	INDEX	PAGE
01252-30816	F4500-55A0	7	150300
154-61-16570	F4500-55A0	8	150300
419-23-30010	F4500-56A0	1	150310
04020-01228	F4500-56A0	1	150310
01011-61675	F4500-56A0	2	150310
01643-31645	F4500-56A0	3	150310
419-22-33250	F4500-56A0	4	150310
07002-13034	F4500-56A0	5	150310
419-23-30010	F4500-57A0	1	150320
418-43-37302	F4500-57A0	1	150320
07000-12040	F4500-57A0	2	150320
01010-61290	F4500-57A0	3	150320
01643-31232	F4500-57A0	4	150320
07040-11409	F4500-57A0	5	150320
07002-11423	F4500-57A0	6	150320
419-14-31132	F4810-01A0	1	150330
419-14-31145	F4810-01A0	2	150330
419-14-31150	F4810-01A0	3	150330
419-14-31160	F4810-01A0	4	150330
418-01-11112	F4810-01A0	5	150330
419-01-11162	F4810-01A0	6	150330
01011-62220	F4810-01A0	7	150330
419-01-11162	F4810-01A0	8	150330
01580-02218	F4810-01A0	9	150330
01643-32260	F4810-01A0	10	150330
20S-01-71331	F4810-01A0	11	150330
01580-11008	F4810-01A0	12	150330
01643-31032	F4810-01A0	13	150330
01010-81235	F4810-01A0	14	150330
01643-31232	F4810-01A0	15	150330
01010-81035	F4810-01A0	16	150330
01643-31032	F4810-01A0	17	150330
07049-01620	F4810-01A0	18	150330
419-60-35113	H0110-01A0	1	180010
421-60-11622	H0110-01A0	2	180010
07002-15234	H0110-01A0	3	180010
419-60-35220	H0110-01A0	4	180010
07040-12412	H0110-01A0	5	180010
07002-12434	H0110-01A0	6	180010
418-60-35120	H0110-01A0	7	180010
417-60-15380	H0110-01A0	7	180010
419-60-35164	H0110-01A0	8	180010
01010-81025	H0110-01A0	9	180010
07000-15200	H0110-01A0	10	180010
01643-31032	H0110-01A0	11	180010
01010-81240	H0110-01A0	12	180010
01643-31232	H0110-01A0	13	180010
419-60-35142	H0110-01A0	14	180010
419-60-35152	H0110-01A0	14	180010
01010-81035	H0110-01A0	15	180010

PARTS Nº	FIG. Nº	INDEX	PAGE
203-54-56970	H0110-01A0	16	180010
418-60-35152	H0110-01A0	17	180010
01010-81020	H0110-01A0	18	180010
203-54-56970	H0110-01A0	19	180010
418-60-35190	H0110-01A0	20	180010
419-60-35130	H0110-01A0	21	180010
01010-81020	H0110-01A0	22	180010
01643-31032	H0110-01A0	23	180010
709-93-12700	H0120-01A1	1	180020
01010-81285	H0120-01A1	2	180020
01643-31232	H0120-01A1	3	180020
01010-81290	H0120-01A1	4	180020
01643-31232	H0120-01A1	5	180020
419-64-33111	H0120-01A1	6	180020
01010-81255	H0120-01A1	7	180020
419-43-17930	H0120-01A1	8	180020
417-54-13470	H0120-01A1	9	180020
415-64-13130	H0120-01A1	10	180020
419-43-17920	H0120-01A1	11	180020
01643-31232	H0120-01A1	12	180020
02782-50315	H0120-01A1	13	180020
07002-12034	H0120-01A1	14	180020
02896-11009	H0120-01A1	15	180020
02782-50315	H0120-01A1	16	180020
07002-12034	H0120-01A1	17	180020
02896-11009	H0120-01A1	18	180020
419-62-33121	H0120-01A1	19	180020
07040-11007	H0120-01A1	22	180020
07002-11023	H0120-01A1	23	180020
02782-50315	H0120-01A1	24	180020
07002-12034	H0120-01A1	25	180020
02896-11009	H0120-01A1	26	180020
02782-50315	H0120-01A1	27	180020
07002-12034	H0120-01A1	28	180020
02896-11009	H0120-01A1	29	180020
07040-11007	H0120-01A1	30	180020
07002-11023	H0120-01A1	31	180020
07002-12434	H0120-01A1	32	180020
8255-62-4330	H0120-01A1	33	180020
700-92-39000	H0120-01A2	1	180030
01010-81285	H0120-01A2	2	180030
01643-31232	H0120-01A2	3	180030
01010-81290	H0120-01A2	4	180030
01643-31232	H0120-01A2	5	180030
419-64-33111	H0120-01A2	6	180030
01010-81255	H0120-01A2	7	180030
419-43-17930	H0120-01A2	8	180030
417-54-13470	H0120-01A2	9	180030

PARTS Nº	FIG. Nº	INDEX	PAGE
415-64-13130	H0120-01A2	10	180030
419-43-17920	H0120-01A2	11	180030
01643-31232	H0120-01A2	12	180030
02782-50315	H0120-01A2	13	180030
07002-12034	H0120-01A2	14	180030
02896-11009	H0120-01A2	15	180030
02782-50315	H0120-01A2	16	180030
07002-12034	H0120-01A2	17	180030
02896-11009	H0120-01A2	18	180030
419-62-33121	H0120-01A2	19	180030
07002-12034	H0120-01A2	20	180030
02896-11009	H0120-01A2	21	180030
07040-11007	H0120-01A2	22	180030
07002-11023	H0120-01A2	23	180030
700-82-84001	H0120-02A2	1	180040
419-N28-2110	H0120-02A2	2	180040
419-N28-2120	H0120-02A2	3	180040
01010-81025	H0120-02A2	4	180040
01643-31032	H0120-02A2	5	180040
419-43-17930	H0120-02A2	6	180040
415-64-13130	H0120-02A2	7	180040
417-54-13470	H0120-02A2	8	180040
419-43-17920	H0120-02A2	9	180040
01435-01245	H0120-02A2	10	180040
02782-10311	H0120-02A2	11	180040
07002-11423	H0120-02A2	12	180040
02896-11009	H0120-02A2	13	180040
423-V88-2630	H0120-02A2	14	180040
07002-13334	H0120-02A2	15	180040
02782-10632	H0120-02A2	16	180040
02896-11018	H0120-02A2	17	180040
21W-62-42640	H0120-02A2	18	180040
11Y-62-11980	H0120-02A2	19	180040
02781-00628	H0120-02A2	20	180040
07002-12434	H0120-02A2	21	180040
02896-11018	H0120-02A2	22	180040
419-64-35301	H0122-01A0	1	180050
416-64-15230	H0122-01A0	3	180050
419-64-35430	H0122-01A0	4	180050
418-64-25330	H0122-01A0	5	180050
416-64-15260	H0122-01A0	6	180050
416-64-15270	H0122-01A0	7	180050
419-64-35112	H0122-01A0	8	180050
01010-81050	H0122-01A0	9	180050
01643-31032	H0122-01A0	10	180050
415-64-13120	H0122-01A0	11	180050
419-43-17930	H0122-01A0	12	180050
415-64-13130	H0122-01A0	13	180050
417-62-14130	H0122-01A0	14	180050
01010-80880	H0122-01A0	15	180050

PARTS Nº	FIG. Nº	INDEX	PAGE
01643-30823	H0122-01A0	16	180050
419-62-31660	H0122-01A0	17	180050
01010-80820	H0122-01A0	18	180050
01643-30823	H0122-01A0	19	180050
01010-80825	H0122-01A0	20	180050
01643-30823	H0122-01A0	21	180050
419-62-33912	H0122-02A0	1	180060
08210-00611	H0122-02A0	2	180060
11Y-62-12530	H0122-02A0	3	180060
416-62-11480	H0122-02A0	4	180060
02896-11008	H0122-02A0	5	180060
04434-52712	H0122-02A0	6	180060
07095-20420	H0122-02A0	7	180060
01010-81020	H0122-02A0	8	180060
01643-31032	H0122-02A0	9	180060
02764-002A5	H0122-02A0	10	180060
11Y-62-12120	H0122-02A0	11	180060
416-62-11480	H0122-02A0	12	180060
02896-11008	H0122-02A0	13	180060
02783-10210	H0122-02A0	14	180060
02896-11008	H0122-02A0	15	180060
07002-11423	H0122-02A0	16	180060
419-62-33674	H0122-02A0	17	180060
08210-01804	H0122-02A0	18	180060
08210-01803	H0122-02A0	19	180060
04434-52512	H0122-02A0	20	180060
01010-81020	H0122-02A0	21	180060
01643-31032	H0122-02A0	22	180060
418-62-32172	H0122-02A0	23	180060
418-62-11630	H0122-02A0	24	180060
419-62-31153	H0122-02A0	25	180060
11Y-62-11980	H0122-02A0	26	180060
419-62-33653	H0122-02A0	27	180060
418-62-31430	H0122-02A0	28	180060
418-62-11620	H0122-02A0	29	180060
02896-11015	H0122-02A0	30	180060
07094-10518	H0122-02A0	31	180060
07095-00523	H0122-02A0	32	180060
01010-81270	H0122-02A0	33	180060
01643-31232	H0122-02A0	34	180060
419-64-35142	H0122-02A0	35	180060
01010-81025	H0122-02A0	36	180060
01643-31032	H0122-02A0	37	180060
419-64-35102	H0122-03A0	1	180070
418-62-31412	H0122-03A0	2	180070
418-62-31421	H0122-03A0	3	180070
415-62-11560	H0122-03A0	4	180070
02896-11015	H0122-03A0	5	180070
56B-61-13650	H0122-03A0	6	180070
416-62-11480	H0122-03A0	7	180070

PARTS Nº	FIG. Nº	INDEX	PAGE
02896-11009	H0122-03A0	8	180070
20Y-62-41970	H0122-04A0	1	180080
07002-11423	H0122-04A0	2	180080
02896-11008	H0122-04A0	3	180080
02783-10210	H0122-04A0	4	180080
07002-11423	H0122-04A0	5	180080
02896-11008	H0122-04A0	6	180080
02765-00205	H0122-04A0	7	180080
419-33-11460	H0122-04A0	8	180080
566-32-11620	H0122-04A0	9	180080
705-56-36051	H0210-01A0	1	180090
705-56-36050	H0210-01A0	1	180090
01010-81240	H0210-01A0	2	180090
01010-81650	H0210-01A0	3	180090
01643-31645	H0210-01A0	4	180090
175-54-34170	H0210-01A0	5	180090
419-62-33950	H0210-01A0	6	180090
07049-02025	H0210-01A0	7	180090
419-62-34110	H0210-01A0	8	180090
07289-00070	H0210-01A0	9	180090
419-62-34212	H0210-01A0	10	180090
07000-12060	H0210-01A0	11	180090
01010-81270	H0210-01A0	12	180090
01643-31232	H0210-01A0	13	180090
419-62-34291	H0210-01A0	14	180090
07000-13048	H0210-01A0	15	180090
01252-71255	H0210-01A0	16	180090
419-62-34311	H0210-01A0	17	180090
07002-13334	H0210-01A0	18	180090
419-03-33261	H2260-01A0	1	180100
01010-81020	H2260-01A0	2	180100
01643-31032	H2260-01A0	3	180100
419-03-33162	H2260-01A0	4	180100
01010-81025	H2260-01A0	5	180100
01643-31032	H2260-01A0	6	180100
419-03-33324	H2260-02A0	1	180110
08210-01803	H2260-02A0	1A	180110
01010-81020	H2260-02A0	2	180110
01643-31032	H2260-02A0	3	180110
04434-53212	H2260-02A0	4	180110
07095-20523	H2260-02A0	5	180110
01010-81030	H2260-02A0	6	180110
01643-31032	H2260-02A0	7	180110
419-03-33343	H2260-02A0	8	180110
08210-01803	H2260-02A0	8A	180110
04434-53412	H2260-02A0	9	180110
07095-20627	H2260-02A0	10	180110
04434-52310	H2260-02A0	11	180110
01010-81020	H2260-02A0	12	180110
01643-31032	H2260-02A0	13	180110

PARTS Nº	FIG. Nº	INDEX	PAGE
419-03-33334	H2260-02A0	14	180110
08210-01203	H2260-02A0	14A	180110
04434-51210	H2260-02A0	15	180110
01010-81020	H2260-02A0	16	180110
01643-31032	H2260-02A0	17	180110
418-62-B1010	H2260-02A1	1	180120
419-62-A1720	H2260-02A1	1	180120
419-62-A1740	H2260-02A1	1	180120
419-62-A1790	H2260-02A1	1	180120
419-62-A1730	H2260-02A1	1	180120
419-03-B1340	H2260-02A1	1A	180120
419-06-B3140	H2260-02A1	1B	180120
419-06-B3150	H2260-02A1	1C	180120
01010-81250	H2260-02A1	2	180120
01643-31232	H2260-02A1	3	180120
01643-31232	H2260-02A1	3	180120
01580-01210	H2260-02A1	4	180120
419-43-17920	H2260-02A1	5	180120
415-64-13130	H2260-02A1	6	180120
417-54-13470	H2260-02A1	7	180120
419-62-B4430	H2260-02A1	8	180120
419-62-B1350	H2260-02A1	8	180120
419-43-17930	H2260-02A1	9	180120
01010-80825	H2260-02A1	10	180120
01010-81025	H2260-02A1	10	180120
01643-30823	H2260-02A1	11	180120
01643-31032	H2260-02A1	11	180120
419-18-B1011	H2260-02A1	12	180120
417-18-32190	H2260-02A1	12	180120
07000-12021	H2260-02A1	13	180120
07000-12018	H2260-02A1	13	180120
02896-11015	H2260-02A1	14	180120
02896-11015	H2260-02A1	14	180120
419-18-B1010	H2260-02A1	12	180120
419-18-B1020	H2260-02A1	13	180120
419-18-B1030	H2260-02A1	14	180120
419-62-B1321	H2260-02A1	15	180120
04434-52312	H2260-02A1	16	180120
07095-20523	H2260-02A1	17	180120
01010-81020	H2260-02A1	18	180120
01643-31032	H2260-02A1	19	180120
419-03-33334	H2260-02A1	20	180120
419-62-B1311	H2260-02A1	21	180120
419-62-B1331	H2260-02A1	22	180120
04434-51210	H2260-02A1	23	180120
04434-52310	H2260-02A1	24	180120
01010-81020	H2260-02A1	25	180120
01643-31032	H2260-02A1	26	180120
08034-20536	H2260-02A1	27	180120
419-62-33341	H4200-01A0	1	180130
419-62-33792	H4200-01A0	2	180130
419-62-31271	H4200-01A0	3	180130
01010-81050	H4200-01A0	4	180130
01643-31032	H4200-01A0	5	180130
415-64-13120	H4200-01A0	6	180130
419-43-17930	H4200-01A0	7	180130
415-64-13130	H4200-01A0	8	180130
417-62-14130	H4200-01A0	9	180130
07000-13038	H4200-01A0	10	180130
07371-31255	H4200-01A0	11	180130
07372-21035	H4200-01A0	12	180130
07372-21045	H4200-01A0	13	180130
01643-51032	H4200-01A0	14	180130
419-62-33313	H4200-01A0	15	180130
07000-13032	H4200-01A0	16	180130
07373-31000	H4200-01A0	17	180130
07371-31049	H4200-01A0	18	180130
07372-21040	H4200-01A0	19	180130
01643-51032	H4200-01A0	20	180130
419-62-33325	H4200-01A0	21	180130
07094-10518	H4200-01A0	22	180130
07095-00526	H4200-01A0	23	180130
01010-81265	H4200-01A0	24	180130
01643-31232	H4200-01A0	25	180130
07000-13025	H4200-01A0	26	180130
07373-10600	H4200-01A0	27	180130
07371-30638	H4200-01A0	28	180130
01010-80840	H4200-01A0	29	180130
01643-50823	H4200-01A0	30	180130
419-V88-3370	H4200-01A4	1	180140
419-62-33792	H4200-01A4	2	180140
419-62-31271	H4200-01A4	3	180140
01010-81050	H4200-01A4	4	180140
01643-31032	H4200-01A4	5	180140
415-64-13120	H4200-01A4	6	180140
419-43-17930	H4200-01A4	7	180140
415-64-13130	H4200-01A4	8	180140
417-62-14130	H4200-01A4	9	180140
07000-13038	H4200-01A4	10	180140
07371-31255	H4200-01A4	11	180140
07372-21035	H4200-01A4	12	180140
07372-21045	H4200-01A4	13	180140
01643-51032	H4200-01A4	14	180140
419-62-33313	H4200-01A4	15	180140
07000-13032	H4200-01A4	16	180140
07373-31000	H4200-01A4	17	180140
07371-31049	H4200-01A4	18	180140
07372-21040	H4200-01A4	19	180140
01643-51032	H4200-01A4	20	180140
419-62-33325	H4200-01A4	21	180140
07094-10518	H4200-01A4	22	180140
07095-00526	H4200-01A4	23	180140
01010-81265	H4200-01A4	24	180140
01643-31232	H4200-01A4	25	180140
07000-13025	H4200-01A4	26	180140
07373-10600	H4200-01A4	27	180140
07371-30638	H4200-01A4	28	180140
01010-80840	H4200-01A4	29	180140
01643-50823	H4200-01A4	30	180140
02782-10522	H4200-02A0	1	180150
419-62-31374	H4200-02A0	2	180150
02781-00516	H4200-02A0	3	180150
07002-12034	H4200-02A0	4	180150
419-62-33335	H4200-02A0	5	180150
02782-10522	H4200-02A0	6	180150
07002-12434	H4200-02A0	7	180150
419-62-33764	H4200-02A0	8	180150
07000-13025	H4200-02A0	9	180150
01010-81035	H4200-02A0	10	180150
01643-31032	H4200-02A0	11	180150
04434-52712	H4200-02A0	12	180150
01010-81020	H4200-02A0	13	180150
01643-31032	H4200-02A0	14	180150
02782-10516	H4200-02A0	15	180150
07002-12034	H4200-02A0	16	180150
02896-11015	H4200-02A0	17	180150
419-62-31630	H4200-02A0	18	180150
419-62-33355	H4200-02A0	19	180150
419-62-33882	H4200-02A0	20	180150
419-18-31562	H4200-02A0	21	180150
07000-12010	H4200-02A0	21	180150
20U-60-22310	H4200-02A0	22	180150
419-18-31523	H4200-02A0	23	180150
419-18-31551	H4200-02A0	24	180150
419-62-31670	H4200-02A0	25	180150
07002-11423	H4200-02A0	26	180150
02896-11009	H4200-02A0	27	180150
02781-0021D	H4200-02A0	28	180150
21W-62-43930	H4200-02A0	29	180150
02782-10210	H4200-02A0	30	180150
07002-11423	H4200-02A0	31	180150
02896-11008	H4200-02A0	32	180150
04434-51212	H4200-02A0	33	180150
01010-81025	H4200-02A0	34	180150
01643-31032	H4200-02A0	34	180150
419-62-33374	H4200-02A0	35	180150
01643-31032	H4200-02A0	35	180150
419-62-34133	H4200-02A0	36	180150
02782-10522	H4200-02A4	1	180160
419-62-31374	H4200-02A4	2	180160
02781-00516	H4200-02A4	3	180160
07002-12034	H4200-02A4	4	180160

PARTS Nº	FIG. Nº	INDEX	PAGE
419-V88-3380	H4200-02A4	5	180160
07094-10518	H4200-02A4	6	180160
07095-00526	H4200-02A4	7	180160
01010-81265	H4200-02A4	8	180160
01643-31232	H4200-02A4	9	180160
07040-12412	H4200-02A4	10	180160
07002-12434	H4200-02A4	11	180160
419-62-33764	H4200-02A4	12	180160
07000-13025	H4200-02A4	13	180160
01010-81035	H4200-02A4	14	180160
01643-31032	H4200-02A4	15	180160
04434-52712	H4200-02A4	16	180160
01010-81020	H4200-02A4	17	180160
01643-31032	H4200-02A4	18	180160
02782-10516	H4200-02A4	19	180160
07002-12034	H4200-02A4	20	180160
02896-11015	H4200-02A4	21	180160
419-62-31630	H4200-02A4	22	180160
419-62-33355	H4200-02A4	23	180160
419-62-33882	H4200-02A4	24	180160
419-18-31562	H4200-02A4	25	180160
07000-12010	H4200-02A4	25	180160
20U-60-22310	H4200-02A4	26	180160
419-18-31523	H4200-02A4	27	180160
419-18-31551	H4200-02A4	28	180160
419-62-31670	H4200-02A4	29	180160
07002-11423	H4200-02A4	30	180160
02896-11009	H4200-02A4	31	180160
02781-0021D	H4200-02A4	32	180160
21W-62-43930	H4200-02A4	33	180160
02782-10210	H4200-02A4	34	180160
07002-11423	H4200-02A4	35	180160
02896-11008	H4200-02A4	36	180160
04434-51212	H4200-02A4	37	180160
01010-81025	H4200-02A4	38	180160
01643-31032	H4200-02A4	39	180160
419-V88-3180	H4200-02A4	40	180160
02782-10516	H4200-02A4	41	180160
07002-12034	H4200-02A4	42	180160
419-V88-3151	H4200-02A4	43	180160
07000-13035	H4200-02A4	44	180160
01010-81050	H4200-02A4	45	180160
01643-31032	H4200-02A4	46	180160
423-V88-3420	H4200-02A4	47	180160
07000-13035	H4200-02A4	48	180160
02896-11018	H4200-02A4	49	180160
01010-81030	H4200-02A4	50	180160
01643-31032	H4200-02A4	51	180160
02762-006A4	H4200-02A4	52	180160
419-V88-3490	H4200-02A4	53	180160
07000-13038	H4200-02A4	54	180160
07371-31255	H4200-02A4	55	180160
07372-21035	H4200-02A4	56	180160
01643-51032	H4200-02A4	57	180160
419-62-33374	H4200-03A0	1	180170
419-62-31252	H4200-03A0	2	180170
419-62-33385	H4200-03A0	3	180170
419-62-33394	H4200-03A0	4	180170
419-62-33683	H4200-03A0	5	180170
07000-13038	H4200-03A0	6	180170
07371-31255	H4200-03A0	7	180170
07372-21040	H4200-03A0	8	180170
07372-21035	H4200-03A0	9	180170
01643-51032	H4200-03A0	10	180170
419-62-31261	H4200-03A0	11	180170
01010-81050	H4200-03A0	12	180170
01643-31032	H4200-03A0	13	180170
415-64-13120	H4200-03A0	14	180170
419-43-17930	H4200-03A0	15	180170
415-64-13130	H4200-03A0	16	180170
417-62-14130	H4200-03A0	17	180170
07283-33450	H4200-03A0	18	180170
07283-53444	H4200-03A0	19	180170
01643-31032	H4200-03A0	20	180170
01597-01009	H4200-03A0	21	180170
419-62-32130	H4200-03A0	22	180170
419-62-32140	H4200-03A0	23	180170
20Y-62-15950	H4200-03A0	23	180170
419-62-32150	H4200-03A0	24	180170
419-62-13470	H4200-03A0	24	180170
419-62-33141	H4200-03A1	25	180180
07094-31228	H4200-03A1	26	180180
07095-01241	H4200-03A1	27	180180
01010-81290	H4200-03A1	28	180180
01643-31232	H4200-03A1	29	180180
01010-81025	H4200-03A1	30	180180
01643-31032	H4200-03A1	31	180180
01010-81030	H4200-03A1	32	180180
01010-81025	H4200-03A1	32	180180
01643-31032	H4200-03A1	33	180180
01643-31032	H4200-03A1	33	180180
22D-62-12440	H4200-03A1	34	180180
01010-81070	H4200-03A1	35	180180
01643-31032	H4200-03A1	36	180180
419-62-34830	H4200-03A1A	1	180185
419-62-34840	H4200-03A1A	2	180185
419-62-34820	H4200-03A1A	3	180185
01010-81235	H4200-03A1A	4	180185
01643-31232	H4200-03A1A	5	180185
203-973-5610	H4200-03A1A	6	180185
07002-12034	H4200-03A1A	7	180185
418-62-33680	H4200-03A1A	8	180185
419-62-31252	H4200-03A1A	9	180185
419-62-33385	H4200-03A1A	10	180185
419-62-33394	H4200-03A1A	11	180185
419-62-33683	H4200-03A1A	12	180185
07000-13038	H4200-03A1A	13	180185
07371-31255	H4200-03A1A	14	180185
07372-21040	H4200-03A1A	15	180185
07372-21035	H4200-03A1A	16	180185

PARTS Nº	FIG. Nº	INDEX	PAGE
01643-51032	H4200-03A1A	17	180185
419-62-31261	H4200-03A1A	18	180185
01010-81050	H4200-03A1A	19	180185
01643-31032	H4200-03A1A	20	180185
415-64-13120	H4200-03A1A	21	180185
419-43-17930	H4200-03A1A	22	180185
415-64-13130	H4200-03A1A	23	180185
417-62-14130	H4200-03A1A	24	180185
07283-33450	H4200-03A1A	25	180185
07283-53444	H4200-03A1A	26	180185
01643-31032	H4200-03A1A	27	180185
01597-01009	H4200-03A1A	28	180185
419-62-32130	H4200-03A1A	29	180185
419-62-32140	H4200-03A1A	30	180185
419-62-32150	H4200-03A1A	31	180185
419-62-33141	H4200-03A1A	32	180185
07094-31228	H4200-03A1A	33	180185
07095-01241	H4200-03A1A	34	180185
01010-81290	H4200-03A1A	35	180185
01643-31232	H4200-03A1A	36	180185
01010-81025	H4200-03A1A	37	180185
01643-31032	H4200-03A1A	38	180185
01010-81030	H4200-03A1A	39	180185
01643-31032	H4200-03A1A	40	180185
22D-62-12440	H4200-03A1A	41	180185
01010-81070	H4200-03A1A	42	180185
01643-31032	H4200-03A1A	43	180185
419-62-33242	H4200-04A0	1	180190
07000-13038	H4200-04A0	2	180190
01252-71060	H4200-04A0	3	180190
02782-10522	H4200-04A0	4	180190
02782-10313	H4200-04A0	5	180190
07002-11423	H4200-04A0	6	180190
02896-11009	H4200-04A0	7	180190
07002-12434	H4200-04A0	8	180190
02896-11015	H4200-04A0	9	180190
419-62-33571	H4200-04A0	10	180190
01010-81035	H4200-04A0	11	180190
01643-31032	H4200-04A0	12	180190
01010-81065	H4200-04A0	13	180190
01643-31032	H4200-04A0	14	180190
07000-13050	H4200-04A0	15	180190
07000-13035	H4200-04A0	16	180190
02781-0031D	H4200-04A0	17	180190
02896-11008	H4200-04A0	18	180190
07002-11423	H4200-04A0	19	180190
02896-11009	H4200-04A0	20	180190
20U-62-41680	H4200-04A0	21	180190
07002-12034	H4200-04A0	22	180190
02896-11015	H4200-04A0	23	180190
419-62-31640	H4200-04A0	24	180190
04065-04218	H4200-04A0	25	180190
01010-81045	H4200-04A0	26	180190
01643-31032	H4200-04A0	27	180190
418-62-33391	H4200-04A0	28	180190
419-62-33242	H4200-04A1	1	180200
07000-13038	H4200-04A1	2	180200
01252-71060	H4200-04A1	3	180200
02782-10522	H4200-04A1	4	180200
02782-10313	H4200-04A1	5	180200
07002-11423	H4200-04A1	6	180200
02896-11009	H4200-04A1	7	180200
07002-12434	H4200-04A1	8	180200
02896-11015	H4200-04A1	9	180200
419-62-33571	H4200-04A1	10	180200
01010-81035	H4200-04A1	11	180200
01643-31032	H4200-04A1	12	180200
01010-81065	H4200-04A1	13	180200
01643-31032	H4200-04A1	14	180200
07000-13050	H4200-04A1	15	180200
07000-13035	H4200-04A1	16	180200
02781-0031D	H4200-04A1	17	180200
02896-11008	H4200-04A1	18	180200
07002-11423	H4200-04A1	19	180200
02896-11009	H4200-04A1	20	180200
02896-11015	H4200-04A1	23	180200
419-62-31640	H4200-04A1	24	180200
04065-04218	H4200-04A1	25	180200
01010-81035	H4200-04A1	26	180200
01643-31032	H4200-04A1	27	180200
419-62-34332	H4200-05A0	1	180210
419-62-33930	H4200-05A0	2	180210
419-62-33922	H4200-05A0	3	180210
419-62-31920	H4200-05A0	4	180210
419-62-33711	H4200-05A0	5	180210
419-62-23990	H4200-05A0	6	180210
421-62-23730	H4200-05A0	7	180210
419-62-34390	H4200-05A0	8	180210
01010-81050	H4200-05A0	9	180210
01643-31032	H4200-05A0	10	180210
01010-81230	H4200-05A0	11	180210
01643-31232	H4200-05A0	12	180210
419-62-31294	H4200-05A0	15	180210
01010-81020	H4200-05A0	16	180210
01643-31032	H4200-05A0	17	180210
419-43-17910	H4200-05A0	18	180210
419-62-34332	H4200-05A2	1	180220
419-62-33930	H4200-05A2	2	180220
419-62-33922	H4200-05A2	3	180220
419-62-31920	H4200-05A2	4	180220
419-62-33711	H4200-05A2	5	180220
419-877-2330	H4200-05A2	6	180220
421-877-2360	H4200-05A2	7	180220
419-877-3380	H4200-05A2	8	180220
01010-81050	H4200-05A2	9	180220
01643-31032	H4200-05A2	10	180220
01010-81230	H4200-05A2	11	180220
01643-31232	H4200-05A2	12	180220
01010-81240	H4200-05A2	13	180220
01643-31232	H4200-05A2	14	180220
419-62-31294	H4200-05A2	15	180220
419-43-17930	H4200-05A2	16	180220
419-V88-3350	H4200-05A4	2	180230
419-62-33922	H4200-05A4	3	180230
419-62-31920	H4200-05A4	4	180230
419-62-33711	H4200-05A4	5	180230
419-V89-2451	H4200-05A4	6	180230
419-V89-2311	H4200-05A4	7	180230
419-V88-3360	H4200-05A4	8	180230
01010-81050	H4200-05A4	9	180230
01643-31032	H4200-05A4	10	180230
01010-81230	H4200-05A4	11	180230
01643-31232	H4200-05A4	12	180230
01010-81240	H4200-05A4	13	180230
01643-31232	H4200-05A4	14	180230
419-62-31294	H4200-05A4	15	180230
419-43-17910	H4200-05A4	18	180230
419-62-33322	H4200-05A4	19	180230
419-V88-3391	H4200-05A4	19	180230
01010-81230	H4200-05A4	20	180230
01643-31232	H4200-05A4	21	180230
07283-33450	H4200-05A4	22	180230
07283-53444	H4200-05A4	23	180230
01597-01009	H4200-05A4	24	180230
01643-31032	H4200-05A4	25	180230
419-62-B4440	H4200-05A5	1	180235
419-62-33930	H4200-05A5	2	180235
419-62-33922	H4200-05A5	3	180235
419-62-31920	H4200-05A5	4	180235
419-62-33711	H4200-05A5	5	180235
419-62-23990	H4200-05A5	6	180235
421-62-23730	H4200-05A5	7	180235

PARTS Nº	FIG. Nº	INDEX	PAGE
419-62-34390	H4200-05A5	8	180235
01010-81050	H4200-05A5	9	180235
01643-31032	H4200-05A5	10	180235
01010-81230	H4200-05A5	11	180235
01643-31232	H4200-05A5	12	180235
01010-81240	H4200-05A5	13	180235
01643-31232	H4200-05A5	14	180235
419-62-31294	H4200-05A5	15	180235
01010-81020	H4200-05A5	16	180235
01643-31032	H4200-05A5	17	180235
419-43-17910	H4200-05A5	18	180235
702-21-04370	H4200-06A0	1	180240
419-64-35134	H4200-06A0	2	180240
415-64-13120	H4200-06A0	3	180240
419-43-17930	H4200-06A0	4	180240
415-64-13130	H4200-06A0	5	180240
417-62-14130	H4200-06A0	6	180240
01643-31032	H4200-06A0	7	180240
01435-01050	H4200-06A0	8	180240
01011-81005	H4200-06A0	9	180240
01010-81090	H4200-06A0	10	180240
01643-31032	H4200-06A0	11	180240
419-62-33584	H4200-07A0	1	180250
419-62-34420	H4200-07A0	2	180250
07000-13035	H4200-07A0	3	180250
07372-21040	H4200-07A0	4	180250
01643-51032	H4200-07A0	5	180250
419-62-33492	H4200-07A0	6	180250
07000-13032	H4200-07A0	7	180250
07371-31049	H4200-07A0	8	180250
07372-21035	H4200-07A0	9	180250
01643-51032	H4200-07A0	10	180250
07000-13032	H4200-07A0	11	180250
07371-31049	H4200-07A0	12	180250
07372-21035	H4200-07A0	13	180250
01643-51032	H4200-07A0	14	180250
419-62-13460	H4200-07A0	15	180250
113-899-7950	H4200-07A0	16	180250
01010-81230	H4200-07A0	17	180250
01643-31232	H4200-07A0	18	180250
01643-31232	H4200-07A0	19	180250
01580-11210	H4200-07A0	20	180250
799-101-5220	H4200-07A0	21	180250
07002-11023	H4200-07A0	22	180250
419-62-33553	H4200-07A0	23	180250
419-62-33512	H4200-07A0	24	180250
195-01-16261	H4200-07A0	25	180250
01011-81045	H4200-07A0	26	180250
01643-31032	H4200-07A0	27	180250
01010-81020	H4200-07A0	28	180250
01643-31032	H4200-07A0	29	180250
419-62-34182	H4200-08A0	1	180260
02896-11018	H4200-08A0	2	180260
07000-13035	H4200-08A0	3	180260
07372-21045	H4200-08A0	4	180260
01643-51032	H4200-08A0	5	180260
419-62-33271	H4200-08A0	6	180260
02896-11018	H4200-08A0	7	180260
07000-13025	H4200-08A0	8	180260
01010-80835	H4200-08A0	9	180260
01643-50823	H4200-08A0	10	180260
419-62-34162	H4200-08A0	11	180260
02896-11018	H4200-08A0	12	180260
07000-13035	H4200-08A0	13	180260
07372-21045	H4200-08A0	14	180260
01643-51032	H4200-08A0	15	180260
419-62-33250	H4200-08A0	16	180260
02896-11018	H4200-08A0	17	180260
07000-13025	H4200-08A0	18	180260
01010-80835	H4200-08A0	19	180260
01643-50823	H4200-08A0	20	180260
423-62-23710	H4200-08A0	21	180260
423-62-23720	H4200-08A0	22	180260
415-64-13130	H4200-08A0	23	180260
419-43-17930	H4200-08A0	24	180260
417-54-13470	H4200-08A0	25	180260
415-64-13120	H4200-08A0	26	180260
01010-81060	H4200-08A0	27	180260
01643-31032	H4200-08A0	28	180260
01580-11008	H4200-08A0	29	180260
01643-31032	H4200-08A0	30	180260
07283-32738	H4200-08A0	31	180260
07283-52737	H4200-08A0	32	180260
01597-01009	H4200-08A0	33	180260
01643-31032	H4200-08A0	34	180260
419-62-33263	H4200-09A0	1	180270
01010-81050	H4200-09A0	2	180270
01643-31032	H4200-09A0	3	180270
415-64-13120	H4200-09A0	4	180270
419-43-17930	H4200-09A0	5	180270
415-64-13130	H4200-09A0	6	180270
417-62-14130	H4200-09A0	7	180270
419-62-34380	H4200-09A0	8	180270
04065-03212	H4200-09A0	9	180270
07040-13316	H4200-09A0	10	180270
07002-13334	H4200-09A0	11	180270
07041-13612	H4200-09A0	12	180270
07002-13634	H4200-09A0	13	180270
20Y-60-11410	H4200-10A0	1	180280
07002-12034	H4200-10A0	2	180280
418-62-34232	H4200-10A0	3	180280
01010-81025	H4200-10A0	4	180280
01643-31032	H4200-10A0	5	180280
07002-12034	H4200-10A0	6	180280
02896-11009	H4200-10A0	7	180280
418-62-31491	H4200-10A0	8	180280
07002-12034	H4200-10A0	8	180280
205-60-64300	H4200-10A0	8	180280
04065-01410	H4200-10A0	9	180280
205-60-64290	H4200-10A0	10	180280
205-60-51390	H4200-10A0	11	180280
205-60-51410	H4200-10A0	12	180280
205-60-51420	H4200-10A0	13	180280
02782-10422	H4200-10A0	14	180280
02896-11012	H4200-10A0	15	180280
02782-50210	H4200-10A0	16	180280
07002-11423	H4200-10A0	17	180280
02896-11008	H4200-10A0	18	180280
07040-11007	H4200-10A0	19	180280
07002-11023	H4200-10A0	20	180280
418-62-35130	H4200-10A0	21	180280
07000-12018	H4200-10A0	22	180280
02896-11012	H4200-10A0	23	180280
419-62-33622	H4200-10A0	24	180280
04434-52711	H4200-10A0	25	180280
07095-20418	H4200-10A0	26	180280
01010-81020	H4200-10A0	27	180280
01643-31032	H4200-10A0	28	180280
419-62-33422	H4200-11A0	1	180290
08210-00604	H4200-11A0	2	180290
419-62-33433	H4200-11A0	3	180290
419-62-33442	H4200-11A0	4	180290
08210-01206	H4200-11A0	5	180290
419-62-33452	H4200-11A0	6	180290
08210-01206	H4200-11A0	7	180290
419-62-33462	H4200-11A0	8	180290
08210-01206	H4200-11A0	9	180290
419-62-33472	H4200-11A0	10	180290
08210-01206	H4200-11A0	11	180290
04434-51512	H4200-11A0	12	180290
201-03-29160	H4200-11A0	13	180290
01010-81025	H4200-11A0	14	180290
01643-31032	H4200-11A0	15	180290
01010-81040	H4200-11A0	16	180290
01643-31032	H4200-11A0	17	180290
04434-51510	H4200-11A0	18	180290
01010-81020	H4200-11A0	19	180290
01643-31032	H4200-11A0	20	180290
21K-03-11190	H4200-11A0	21	180290
01010-81025	H4200-11A0	22	180290

PARTS Nº	FIG. Nº	INDEX	PAGE
01643-31032	H4200-11A0	23	180290
419-62-33422	H4200-11A2	1	180300
08210-00604	H4200-11A2	2	180300
419-62-33433	H4200-11A2	3	180300
419-62-33442	H4200-11A2	4	180300
08210-01206	H4200-11A2	5	180300
419-62-33452	H4200-11A2	6	180300
08210-01206	H4200-11A2	7	180300
419-62-33462	H4200-11A2	8	180300
08210-01206	H4200-11A2	9	180300
419-62-33472	H4200-11A2	10	180300
08210-01206	H4200-11A2	11	180300
419-877-3153	H4200-11A2	12	180300
419-877-3152	H4200-11A2	12	180300
08210-01206	H4200-11A2	13	180300
419-877-3164	H4200-11A2	14	180300
419-877-3163	H4200-11A2	14	180300
08210-01206	H4200-11A2	15	180300
04434-51512	H4200-11A2	16	180300
201-03-29160	H4200-11A2	17	180300
01010-81025	H4200-11A2	18	180300
01643-31032	H4200-11A2	19	180300
01010-81040	H4200-11A2	20	180300
01643-31032	H4200-11A2	21	180300
04434-51510	H4200-11A2	22	180300
04435-51510	H4200-11A2	23	180300
01010-81020	H4200-11A2	24	180300
01643-31032	H4200-11A2	25	180300
21K-03-11190	H4200-11A2	26	180300
01010-81025	H4200-11A2	27	180300
01643-31032	H4200-11A2	28	180300
08034-40521	H4200-11A2	29	180300
419-62-33422	H4200-11A4	1	180310
08210-00604	H4200-11A4	2	180310
419-62-33433	H4200-11A4	3	180310
04434-51512	H4200-11A4	4	180310
201-03-29160	H4200-11A4	5	180310
01010-81025	H4200-11A4	6	180310
01643-31032	H4200-11A4	7	180310
01010-81040	H4200-11A4	8	180310
01643-31032	H4200-11A4	9	180310
04434-51510	H4200-11A4	10	180310
01010-81020	H4200-11A4	11	180310
01643-31032	H4200-11A4	12	180310
21K-03-11190	H4200-11A4	13	180310
01010-81025	H4200-11A4	14	180310
01643-31032	H4200-11A4	15	180310
419-V88-3410	H4200-11A4	16	180310
08210-01207	H4200-11A4	17	180310
419-V88-3420	H4200-11A4	18	180310
08210-01206	H4200-11A4	19	180310
419-V88-3430	H4200-11A4	20	180310
08210-01207	H4200-11A4	21	180310
419-V88-3440	H4200-11A4	22	180310
08210-01206	H4200-11A4	23	180310
419-V88-3450	H4200-11A4	24	180310
08210-01206	H4200-11A4	25	180310
419-V88-3460	H4200-11A4	26	180310
08210-01206	H4200-11A4	27	180310
419-V88-3470	H4200-11A4	28	180310
08210-01206	H4200-11A4	29	180310
419-V88-3480	H4200-11A4	30	180310
08210-01206	H4200-11A4	31	180310
02753-00610	H4200-12A0	1	180320
07040-12012	H4200-13A2	1	180330
07002-12034	H4200-13A2	2	180330
07040-12412	H4200-13A2	3	180330
07002-12434	H4200-13A2	4	180330
07378-11000	H4200-13A2	5	180330
07000-13032	H4200-13A2	6	180330
07371-31049	H4200-13A2	7	180330
07372-21035	H4200-13A2	8	180330
01643-51032	H4200-13A2	9	180330
07000-13025	H4200-16A2	1	180340
07371-30638	H4200-16A2	2	180340
01010-80835	H4200-16A2	3	180340
01643-50823	H4200-16A2	4	180340
07378-10600	H4200-16A2	5	180340
419-877-3430	H4200-16A2	6	180340
419-877-3420	H4200-16A2	7	180340
418-878-1310	H4200-16A2	8	180340
01010-81020	H4200-16A2	9	180340
01643-31032	H4200-16A2	10	180340
419-877-1371	H4200-16A2	11	180340
419-877-1380	H4200-16A2	12	180340
419-877-1390	H4200-16A2	13	180340
01010-81075	H4200-16A2	14	180340
01643-31032	H4200-16A2	15	180340
01010-81070	H4200-16A2	16	180340
01643-31032	H4200-16A2	17	180340
07000-13025	H4200-16A4	1	180350
07371-30638	H4200-16A4	2	180350
01010-80835	H4200-16A4	3	180350
01643-50823	H4200-16A4	4	180350
07378-10600	H4200-16A4	5	180350
419-V88-3250	H4200-16A4	6	180350
419-V88-3260	H4200-16A4	7	180350
419-V88-3280	H4200-16A4	8	180350
419-V88-3290	H4200-16A4	9	180350
418-878-1310	H4200-16A4	10	180350
01010-81020	H4200-16A4	11	180350
01643-31032	H4200-16A4	12	180350
423-V88-2690	H4200-16A4	13	180350
01010-81020	H4200-16A4	14	180350
01643-31032	H4200-16A4	15	180350
419-877-1371	H4200-16A4	16	180350
419-877-1380	H4200-16A4	17	180350
419-878-1290	H4200-16A4	18	180350
419-877-1390	H4200-16A4	19	180350
01011-81030	H4200-16A4	20	180350
01643-31032	H4200-16A4	21	180350
419-878-1150	H4200-16A4	22	180350
07283-32746	H4200-16A4	23	180350
07283-52737	H4200-16A4	24	180350
01597-01009	H4200-16A4	25	180350
01643-31032	H4200-16A4	26	180350
07125-00611	H4200-17A2	1	180360
07000-13025	H4200-17A2	2	180360
07371-30640	H4200-17A2	3	180360
07372-21035	H4200-17A2	4	180360
01643-51032	H4200-17A2	5	180360
07371-30638	H4200-17A2	6	180360
01010-80830	H4200-17A2	7	180360
01643-50823	H4200-17A2	8	180360
419-877-3321	H4200-17A2	9	180360
419-877-3332	H4200-17A2	10	180360
419-877-3331	H4200-17A2	10	180360
07000-13032	H4200-17A2	11	180360
07372-21040	H4200-17A2	12	180360
01643-51032	H4200-17A2	13	180360
419-877-3340	H4200-17A2	14	180360
419-877-3350	H4200-17A2	15	180360
01010-81045	H4200-17A2	16	180360
423-877-2210	H4200-17A2	17	180360
01010-81050	H4200-17A2	18	180360
417-54-13470	H4200-17A2	19	180360
419-43-17930	H4200-17A2	20	180360
415-64-13120	H4200-17A2	21	180360
07283-52737	H4200-17A2	24	180360
01597-01009	H4200-17A4	1	180370
07283-52737	H4200-17A4	2	180370
01643-31032	H4200-17A4	3	180370
07283-32746	H4200-17A4	4	180370
01643-31032	H4200-17A4	5	180370
07283-52737	H4200-17A4	6	180370
01010-81030	H4200-17A4	7	180370
01643-50823	H4200-17A4	8	180370
419-V88-3110	H4200-17A4	9	180370
418-V88-3120	H4200-17A4	10	180370
419-V88-3130	H4200-17A4	11	180370
419-V88-3140	H4200-17A4	12	180370
419-V88-3310	H4200-17A4	13	180370
419-V88-3320	H4200-17A4	14	180370
01010-81045	H4200-17A4	15	180370
417-54-13470	H4200-17A4	16	180370
419-43-17930	H4200-17A4	17	180370
415-64-13130	H4200-17A4	18	180370
415-64-13120	H4200-17A4	19	180370
07283-32746	H4200-17A4	20	180370
07283-52737	H4200-17A4	21	180370
01597-01009	H4200-17A4	22	180370
01643-31032	H4200-17A4	23	180370
423-877-2210	H4200-17A4	24	180370
01010-81050	H4200-17A4	25	180370
417-54-13470	H4200-17A4	26	180370
419-43-17930	H4200-17A4	27	180370
415-64-13130	H4200-17A4	28	180370
415-64-13120	H4200-17A4	29	180370
421-S99-3450	H4200-51A0	1	180380
421-S99-3210	H4200-51A0	1	180380
421-S99-3220	H4200-51A0	2	180380
421-S99-3230	H4200-51A0	3	180380
421-S99-3240	H4200-51A0	4	180380
421-S99-3260	H4200-51A0	5	180380
421-S99-3270	H4200-51A0	6	180380
421-S99-3281	H4200-51A0	7	180380
421-S99-3290	H4200-51A0	8	180380
421-S99-3310	H4200-51A0	9	180380
421-S99-3320	H4200-51A0	10	180380
421-S99-3330	H4200-51A0	11	180380
421-S99-3340	H4200-51A0	12	180380
421-S99-3350	H4200-51A0	13	180380
421-S99-3360	H4200-51A0	14	180380
421-S99-3370	H4200-51A0	15	180380
421-S99-3380	H4200-51A0	16	180380
07000-B2010	H4200-51A0	17	180380
421-S99-3390	H4200-51A0	18	180380
421-S99-3410	H4200-51A0	19	180380
421-S99-3420	H4200-51A0	20	180380
421-S99-3430	H4200-51A0	21	180380
421-S99-3440	H4200-51A0	22	180380
421-S99-3560	H4200-51A0	23	180380
421-S99-3570	H4200-51A0	24	180380
419-62-31224	H4410-01A0	1	180390
01010-81025	H4410-01A0	2	180390
01643-31032	H4410-01A0	3	180390
419-62-31463	H4410-01A0	4	180390
01010-81030	H4410-01A0	5	180390
01643-31032	H4410-01A0	6	180390
01643-31032	H4410-01A0	7	180390
07283-32236	H4410-01A0	8	180390
01597-01009	H4410-01A0	9	180390
419-62-33971	H4410-01A0	10	180390
07283-52232	H4410-01A0	11	180390
419-62-33891	H4410-01A0	12	180390
419-62-31610	H4410-01A0	13	180390
419-62-34450	H4410-01A0	14	180390
419-62-33960	H4410-01A0	15	180390
07002-13034	H4410-01A0	16	180390
02896-11012	H4410-01A0	17	180390
02896-11008	H4410-01A0	18	180390
419-64-35151	H4410-01A0	19	180390
01010-81025	H4410-01A0	20	180390
01643-31032	H4410-01A0	21	180390
419-62-B1590	H4410-01A0	22	180390
419-62-31590	H4410-01A0	22	180390
01010-81020	H4410-01A0	23	180390
01643-31032	H4410-01A0	24	180390
02896-11008	H4410-01A0	25	180390
419-62-34460	H4410-01A0	26	180390
419-62-34471	H4410-01A0	27	180390
424-06-31290	H4410-01A0	28	180390
08034-20834	H4410-01A0	29	180390
419-64-35600	H4410-01A0	30	180390
01010-80845	H4410-01A0	31	180390
01643-30823	H4410-01A0	32	180390
419-62-34481	H4410-01A0	33	180390
02896-11008	H4410-01A0	34	180390
07000-12014	H4410-01A0	35	180390
419-62-31581	H4410-01A0	36	180390
419-62-31571	H4410-01A0	36	180390
20U-60-22310	H4410-01A0	37	180390
21Y-62-11591	H4410-01A0	38	180390
07000-12011	H4410-01A0	39	180390
02896-11008	H4410-01A0	40	180390
419-64-35600	H4410-51A0	1	180400
418-64-15830	H4410-51A0	8	180400
418-64-15840	H4410-51A0	9	180400
418-64-15850	H4410-51A0	10	180400
418-64-15870	H4410-51A0	11	180400
418-64-15880	H4410-51A0	12	180400
418-64-15910	H4410-51A0	13	180400
418-64-15920	H4410-51A0	14	180400
418-64-15930	H4410-51A0	15	180400
418-64-15940	H4410-51A0	16	180400
418-64-15810	H4410-51A0	K	180400
419-877-3311	J4110-01A2A	1	210010
09602-12051	J4110-01A2A	2	210010
04418-13060	J4110-01A2A	3	210010
419-46-31200	J4110-01A4	1	210020
09602-12051	J4110-01A4	2	210020
04418-13060	J4110-01A4	3	210020
419-V88-3620	J4110-01A7	1	210030
09602-12051	J4110-01A7	2	210030
04418-13060	J4110-01A7	3	210030
419-46-B1021	J4120-01A1	1	210040
419-46-B1100	J4120-01A1	1	210040
419-975-3213	J4120-01A1	1	210040
419-975-3212	J4120-01A1	1	210040
419-46-32311	J4120-01A1	2	210040
01010-81030	J4120-01A1	3	210040
01643-31032	J4120-01A1	4	210040
419-46-32321	J4120-01A1	5	210040
01010-81225	J4120-01A1	6	210040
01643-31232	J4120-01A1	7	210040
419-46-42210	J4120-01A1	8	210040
419-46-32210	J4120-01A1	8	210040
419-46-42220	J4120-01A1	9	210040
419-46-32220	J4120-01A1	9	210040
419-46-11350	J4130-01A0	1	210050
421-46-11381	J4130-01A0	2	210050
421-46-11371	J4130-01A0	2	210050
01010-81230	J4130-01A0	3	210050
01643-31232	J4130-01A0	4	210050
419-09-11110	J4130-01A0	5	210050
07020-00675	J4130-01A0	6	210050
419-46-11180	J4130-01A0	7	210050
419-46-11230	J4130-01A0	8	210050
419-46-11200	J4130-01A0	9	210050
01010-81235	J4130-01A0	10	210050
01643-31232	J4130-01A0	11	210050
419-46-11250	J4130-01A0	12	210050
419-46-11260	J4130-01A0	12	210050
419-46-11270	J4130-01A0	12	210050
07020-00675	J4130-01A0	13	210050
419-46-11360	J4130-01A0	14	210050
419-46-11281	J4130-01A0	15	210050
419-46-23210	J4130-01A0	16	210050
419-46-11170	J4130-01A0	17	210050
419-46-33220	J4130-01A0	18	210050
01010-61695	J4130-01A0	19	210050
01643-31645	J4130-01A0	20	210050
01010-81245	J4130-01A0	21	210050
01643-31232	J4130-01A0	22	210050
419-46-11211	J4130-01A0	23	210050
419-46-11221	J4130-01A0	23	210050

PARTS Nº	FIG. Nº	INDEX	PAGE
419-46-11330	J4130-01A0	24	210050
01010-81640	J4130-01A0	25	210050
421-70-11280	J4130-01A0	26	210050
419-46-11340	J4130-01A0	27	210050
419-70-11340	J4130-01A0	28	210050
01010-81630	J4130-01A0	29	210050
01643-31645	J4130-01A0	30	210050
707-00-0Z680	J4140-01A0	1	210060
418-46-34210	J4140-01A0	2	210060
02896-11012	J4140-01A0	3	210060
418-46-34220	J4140-01A0	4	210060
01010-81016	J4140-01A0	5	210060
01643-31032	J4140-01A0	6	210060
02782-10422	J4140-01A0	7	210060
07002-12034	J4140-01A0	8	210060
02896-11012	J4140-01A0	9	210060
419-46-12260	J4140-01A0	10	210060
419-46-12280	J4140-01A0	11	210060
419-46-12290	J4140-01A0	11	210060
01010-81220	J4140-01A0	12	210060
175-54-34170	J4140-01A0	13	210060
419-46-32260	J4140-01A0	14	210060
421-46-12920	J4190-01A0	1	210070
421-46-12721	J4190-01A0	2	210070
04025-01065	J4190-01A0	3	210070
421-46-12731	J4190-01A0	4	210070
421-46-12740	J4190-01A0	5	210070
419-46-24120	J4190-01A0	6	210070
01010-81230	J4190-01A0	7	210070
01643-31232	J4190-01A0	8	210070
418-46-34413	J4190-01A0	9	210070
418-46-34412	J4190-01A0	9	210070
01010-81225	J4190-01A0	10	210070
01643-31232	J4190-01A0	11	210070
418-46-34421	J4190-01A0	12	210070
418-46-34420	J4190-01A0	12	210070
01010-81225	J4190-01A0	13	210070
01643-31232	J4190-01A0	14	210070
419-46-34420	J4190-01A0	15	210070
01010-81225	J4190-01A0	16	210070
01643-31232	J4190-01A0	17	210070
419-46-34430	J4190-01A0	18	210070
01010-81225	J4190-01A0	19	210070
01643-31232	J4190-01A0	20	210070
421-09-21420	J4190-01A0	21	210070
421-46-12920	J4190-01A2	1	210080
421-46-12721	J4190-01A2	2	210080
04025-01065	J4190-01A2	3	210080
421-46-12731	J4190-01A2	4	210080
421-46-12740	J4190-01A2	5	210080
419-877-2220	J4190-01A2	6	210080
01010-81225	J4190-01A2	7	210080
01643-31232	J4190-01A2	8	210080
418-46-34413	J4190-01A2	9	210080
418-46-34412	J4190-01A2	9	210080
01010-81225	J4190-01A2	10	210080
01643-31232	J4190-01A2	11	210080
418-46-34421	J4190-01A2	12	210080
418-46-34420	J4190-01A2	12	210080
01010-81225	J4190-01A2	13	210080
01643-31232	J4190-01A2	14	210080
419-46-34420	J4190-01A2	15	210080
01010-81225	J4190-01A2	16	210080
01643-31232	J4190-01A2	17	210080
419-46-34430	J4190-01A2	18	210080
01010-81225	J4190-01A2	19	210080
01643-31232	J4190-01A2	20	210080
421-09-21420	J4190-01A2	21	210080
421-46-12920	J4190-01A3	1	210090
421-46-12721	J4190-01A3	2	210090
04025-01065	J4190-01A3	3	210090
421-46-12731	J4190-01A3	4	210090
421-46-12740	J4190-01A3	5	210090
419-879-2210	J4190-01A3	6	210090
01010-81225	J4190-01A3	7	210090
01643-31232	J4190-01A3	8	210090
418-46-34413	J4190-01A3	9	210090
01010-81225	J4190-01A3	10	210090
01643-31232	J4190-01A3	11	210090
418-46-34421	J4190-01A3	12	210090
01010-81225	J4190-01A3	13	210090
01643-31232	J4190-01A3	14	210090
419-46-34420	J4190-01A3	15	210090
01010-81225	J4190-01A3	16	210090
01643-31232	J4190-01A3	17	210090
419-46-34431	J4190-01A3	18	210090
01010-81225	J4190-01A3	19	210090
01643-31232	J4190-01A3	20	210090
421-09-21420	J4190-01A3	21	210090
419-46-37111	J4210-01A0	1	210100
423-46-27180	J4210-01A0	2	210100
01010-81235	J4210-01A0	3	210100
01643-31232	J4210-01A0	4	210100
421-46-15132	J4210-01A0	5	210100
424-46-12172	J4210-01A0	6	210100
423-46-27120	J4210-01A0	7	210100
423-46-27140	J4210-01A0	8	210100
423-46-27130	J4210-01A0	9	210100
01010-62090	J4210-01A0	10	210100
01643-32060	J4210-01A0	11	210100
423-46-27150	J4210-01A0	12	210100
01010-81260	J4210-01A0	13	210100
01643-31232	J4210-01A0	14	210100
423-46-27170	J4210-01A0	15	210100
01010-81235	J4210-01A0	16	210100
01643-31232	J4210-01A0	17	210100
419-46-12480	J4210-01A0	18	210100
423-46-27190	J4210-01A0	19	210100
423-46-27220	J4210-01A0	20	210100
01011-62785	J4210-01A0	21	210100
01643-32780	J4210-01A0	22	210100
01580-02722	J4210-01A0	23	210100
419-46-37120	J4210-01A0	24	210100
07217-70510	J4710-01A0	1	210110
419-46-36210	J4710-01A0	2	210110
04434-50510	J4710-01A0	3	210110
01010-81016	J4710-01A0	4	210110
01643-31032	J4710-01A0	5	210110
419-46-36220	J4710-01A0	6	210110
419-46-36231	J4710-01A0	7	210110
07214-80510	J4710-01A0	8	210110
07214-70510	J4710-01A0	8	210110
07020-00675	J4710-01A0	9	210110
419-46-36242	J4710-01A0	10	210110
07217-70510	J4710-01A0	11	210110
04434-50510	J4710-01A0	12	210110
01010-81020	J4710-01A0	13	210110
01643-31032	J4710-01A0	14	210110
419-46-36252	J4710-01A0	15	210110
07214-80510	J4710-01A0	16	210110
07214-70510	J4710-01A0	16	210110
04434-50510	J4710-01A0	17	210110
01010-81020	J4710-01A0	18	210110
01643-31032	J4710-01A0	19	210110
419-46-36262	J4710-01A0	20	210110
07214-80510	J4710-01A0	21	210110
07214-70510	J4710-01A0	21	210110
04434-50510	J4710-01A0	22	210110
01010-81020	J4710-01A0	23	210110
01643-31032	J4710-01A0	24	210110
07020-00675	J4710-01A0	25	210110
419-46-36273	J4710-01A0	26	210110
01010-81025	J4710-01A0	27	210110
01643-31032	J4710-01A0	28	210110
418-57-B1220	K0110-01A7	1	240010
418-57-B1310	K0110-01A7	2	240010
418-57-B1320	K0110-01A7	3	240010
01252-80825	K0110-01A7	4	240010
01435-40820	K0110-01A7	4	240010
01010-81230	K0110-01A7	5	240010
01643-31232	K0110-01A7	6	240010
418-57-B1220	K0110-01A7A	1	240020
GJ18000412	K0110-01A7A	1	240020
GJ18030495	K0110-01A7A	2	240020
GJ18030250	K0110-01A7A	3	240020
GJ18000411	K0110-01A7A	4	240020
GJ18030494	K0110-01A7A	5	240020
GJ18260394	K0110-01A7A	6	240020
GJ18000410	K0110-01A7A	7	240020
GJ18030493	K0110-01A7A	8	240020
GJ18180434	K0110-01A7A	9	240020
GJ19400160	K0110-01A7A	10	240020
GJ19400159	K0110-01A7A	11	240020
GJ18240070	K0110-01A7A	12	240020
GJ18210033	K0110-01A7A	13	240020
GJ18180415	K0110-01A7A	14	240020
GJ19016420	K0110-01A7A	15	240020
GJ18210031	K0110-01A7A	16	240020
GJ18240132	K0110-01A7A	17	240020
GJ18240077	K0110-01A7A	18	240020
GJ18030350	K0110-01A7A	19	240020
GJ18180434	K0110-01A7A	21	240020
GJ18210032	K0110-01A7A	22	240020
GJ18180446	K0110-01A7A	23	240020
GJ18150058	K0110-01A7A	24	240020
GJ18240083	K0110-01A7A	25	240020
GJ18180311	K0110-01A7A	26	240020
GJ18260395	K0110-01A7A	27	240020
09409-10001	K0160-01A1A	1	240030
09409-00001	K0160-01A1A	1	240030
01643-51232	K0160-01A1A	1	240030
09409-00003	K0160-01A1A	1	240030
09409-20000	K0160-01A1A	2	240030
09409-00001	K0160-01A1A	2	240030
01643-51232	K0160-01A1A	2	240030
09409-00003	K0160-01A1A	2	240030
416-40-11150	K0160-01A1A	3	240030
02030-70719	K0160-01A1A	4	240030
201-979-7820	K0210-01A0	1	240040
418-07-33630	K0210-01A0	2	240040
418-07-33640	K0210-01A0	3	240040
42C-07-13131	K0210-01A0	4	240040
418-07-29450	K0210-01A0	5	240040
07289-00045	K0210-01A0	6	240040
421-07-23990	K0210-01A0	7	240040
01370-00412	K0210-01A0	8	240040
01611-04045	K0210-01A0	9	240040
418-07-33810	K0210-01A0	10	240040
418-07-33820	K0210-01A0	11	240040
01010-80616	K0210-01A0	12	240040
01643-30623	K0210-01A0	13	240040
418-07-33130	K0210-01A0	14	240040
01370-00412	K0210-01A0	15	240040
01611-04045	K0210-01A0	16	240040
421-07-23810	K0210-01A0	17	240040
421-07-23820	K0210-01A0	18	240040
01010-80616	K0210-01A0	19	240040
01643-30623	K0210-01A0	20	240040
421-07-23660	K0210-02A0	1	240050
418-07-33611	K0210-02A0	2	240050
01010-81020	K0210-02A0	3	240050
01643-31032	K0210-02A0	4	240050
421-07-23751	K0210-02A0	5	240050
01010-81020	K0210-02A0	6	240050
01643-31032	K0210-02A0	7	240050
01010-81020	K0210-02A0	8	240050
01643-31032	K0210-02A0	9	240050
421-07-23600	K0210-02A0	10	240050
423-07-23110	K0210-02A0	11	240050
423-07-23120	K0210-02A0	12	240050
423-07-23130	K0210-02A0	13	240050
423-07-23140	K0210-02A0	14	240050
423-07-23150	K0210-02A0	15	240050
421-07-23771	K0210-02A0	16	240050
421-07-23620	K0210-02A0	17	240050
423-07-23160	K0210-02A0	18	240050
423-07-23170	K0210-02A0	19	240050
423-07-23180	K0210-02A0	20	240050
423-07-23190	K0210-02A0	21	240050
423-07-23211	K0210-02A0	22	240050
418-07-33710	K0210-02A0	23	240050
418-07-33730	K0210-02A0	24	240050
418-07-33740	K0210-02A0	25	240050
01010-81016	K0210-02A0	26	240050
01643-31032	K0210-02A0	27	240050
421-07-23680	K0210-02A0	28	240050
418-07-33620	K0210-02A0	29	240050
418-07-33611	K0210-02A5	1	240060
421-07-23660	K0210-02A5	2	240060
421-07-23680	K0210-02A5	3	240060
418-07-33620	K0210-02A5	4	240060
01010-81016	K0210-02A5	5	240060
01643-31032	K0210-02A5	6	240060
418-54-32634	K0210-03A5	1	240070
418-926-3490	K0210-03A5	2	240070
01225-70616	K0210-03A5	3	240070
418-54-32680	K0210-03A5	4	240070
418-926-3490	K0210-03A5	5	240070
01225-70616	K0210-03A5	6	240070
02030-70719	K0210-03A5	7	240070
14X-54-18150	K0210-03A5	8	240070
418-54-32225	K0210-04A0	1	240080
418-54-32224	K0210-04A0	1	240080
418-54-32230	K0210-04A0	1	240080
01010-81225	K0210-04A0	2	240080
01643-31232	K0210-04A0	3	240080
421-54-22520	K0210-04A0	4	240080
418-54-32891	K0210-04A0	5	240080
01010-D0616	K0210-04A0	6	240080
01643-70623	K0210-04A0	7	240080
421-54-22750	K0210-04A0	8	240080
08052-01311	K0210-04A0	9	240080
01023-10612	K0210-04A0	10	240080
418-54-33120	K0210-05A5	1	240090
09415-01008	K0210-05A5	2	240090
421-54-22520	K0210-05A5	3	240090
01010-81225	K0210-05A5	4	240090
01643-31232	K0210-05A5	5	240090
01010-81020	K0210-05A5	6	240090
01643-31032	K0210-05A5	7	240090
419-54-32672	K0210-05A5	8	240090
01225-70616	K0210-05A5	9	240090
418-926-3490	K0210-05A5	10	240090
418-54-32424	K0210-05A5	11	240090
01010-80616	K0210-05A5	12	240090
01643-30623	K0210-05A5	13	240090
418-926-3490	K0210-05A5	14	240090
01225-70616	K0210-05A5	15	240090
418-43-38311	K0210-05A5	16	240090
418-926-3490	K0210-05A5	17	240090
01225-70616	K0210-05A5	18	240090
418-54-32774	K0210-05A5	19	240090
421-54-22750	K0210-05A5	20	240090
421-09-12780	K0210-05A5	20A	240090
23S-55-51530	K0210-05A5	21	240090
418-54-33520	K0210-05A5	22	240090
01225-70616	K0210-05A5	23	240090
418-926-3490	K0210-05A5	24	240090
418-43-31241	K0210-05A5	25	240090
421-43-31520	K0210-05A5	26	240090
01010-80616	K0210-05A5	27	240090
01643-30623	K0210-05A5	28	240090
421-43-31551	K0210-05A5	29	240090
418-54-32241	K0210-05A5	30	240090
01010-81020	K0210-05A5	31	240090
01643-31032	K0210-05A5	32	240090
09415-01610	K0210-05A5	33	240090
418-877-3250	K0210-05B5	1	240100
09415-01008	K0210-05B5	2	240100
421-54-22520	K0210-05B5	3	240100

PARTS Nº	FIG. Nº	INDEX	PAGE
01010-81225	K0210-05B5	4	240100
01643-31232	K0210-05B5	5	240100
01010-81020	K0210-05B5	6	240100
01643-31032	K0210-05B5	7	240100
419-54-32672	K0210-05B5	8	240100
01225-70616	K0210-05B5	9	240100
418-926-3490	K0210-05B5	10	240100
418-54-32424	K0210-05B5	11	240100
01010-80616	K0210-05B5	12	240100
01643-30623	K0210-05B5	13	240100
418-926-3490	K0210-05B5	14	240100
01225-70616	K0210-05B5	15	240100
418-43-38311	K0210-05B5	16	240100
418-926-3490	K0210-05B5	17	240100
01225-70616	K0210-05B5	18	240100
418-54-32774	K0210-05B5	19	240100
421-54-22750	K0210-05B5	20	240100
421-09-12780	K0210-05B5	20A	240100
23S-55-51530	K0210-05B5	21	240100
418-54-33520	K0210-05B5	22	240100
01225-70616	K0210-05B5	23	240100
418-926-3490	K0210-05B5	24	240100
418-43-31241	K0210-05B5	25	240100
421-43-31520	K0210-05B5	26	240100
01010-80616	K0210-05B5	27	240100
01643-30623	K0210-05B5	28	240100
421-43-31551	K0210-05B5	29	240100
418-54-32241	K0210-05B5	30	240100
01010-81020	K0210-05B5	31	240100
01643-31032	K0210-05B5	32	240100
09415-01610	K0210-05B5	33	240100
419-54-32626	K0210-05C5	1	240110
09415-01008	K0210-05C5	2	240110
421-54-22520	K0210-05C5	3	240110
01010-81225	K0210-05C5	4	240110
01643-31232	K0210-05C5	5	240110
01010-81020	K0210-05C5	6	240110
01643-31032	K0210-05C5	7	240110
419-54-B5540	K0210-05C5	8	240110
419-54-32672	K0210-05C5	8	240110
01225-70616	K0210-05C5	9	240110
418-926-3490	K0210-05C5	10	240110
418-54-32424	K0210-05C5	11	240110
01010-80616	K0210-05C5	12	240110
01643-30623	K0210-05C5	13	240110
418-926-3490	K0210-05C5	14	240110
01225-70616	K0210-05C5	15	240110
418-43-38311	K0210-05C5	16	240110
418-926-3490	K0210-05C5	17	240110
01225-70616	K0210-05C5	18	240110
418-54-32891	K0210-05C5	19	240110
421-54-22750	K0210-05C5	20	240110
421-09-12780	K0210-05C5	20A	240110
23S-55-51530	K0210-05C5	21	240110
418-54-33520	K0210-05C5	22	240110
01225-70616	K0210-05C5	23	240110
418-926-3490	K0210-05C5	24	240110
418-43-31241	K0210-05C5	25	240110
421-43-31520	K0210-05C5	26	240110
01010-80616	K0210-05C5	27	240110
01643-30623	K0210-05C5	28	240110
421-43-31551	K0210-05C5	29	240110
418-54-32241	K0210-05C5	30	240110
01010-81020	K0210-05D5	31	240120
01643-31032	K0210-05D5	32	240120
09415-01610	K0210-05D5	33	240120
421-54-22750	K0210-05D5	1	240120
421-09-12780	K0210-05D5	2	240120
23S-55-51530	K0210-05D5	3	240120
418-54-33520	K0210-05D5	4	240120
01643-31232	K0210-05D5	5	240120
01010-81020	K0210-05D5	6	240120
01643-31032	K0210-05D5	7	240120
419-54-B5540	K0210-05D5	8	240120
419-54-32672	K0210-05D5	8	240120
01225-70616	K0210-05D5	9	240120
418-926-3490	K0210-05D5	10	240120
418-54-32424	K0210-05D5	11	240120
01010-80616	K0210-05D5	12	240120
01643-30623	K0210-05D5	13	240120
418-926-3490	K0210-05D5	14	240120
01225-70616	K0210-05D5	15	240120
418-43-38311	K0210-05D5	16	240120
418-926-3490	K0210-05D5	17	240120
01225-70616	K0210-05D5	18	240120
419-54-B4170	K0210-05D5	22	240120
01225-70616	K0210-05D5	23	240120
418-926-3490	K0210-05D5	24	240120
418-43-31241	K0210-05D5	25	240120
421-43-31520	K0210-05D5	26	240120
01010-80616	K0210-05D5	27	240120
01643-30623	K0210-05D5	28	240120
421-43-31551	K0210-05D5	29	240120
418-54-32241	K0210-05D5	30	240120
01010-81020	K0210-05D5	31	240120
01643-31032	K0210-05D5	32	240120
09415-01610	K0210-05D5	33	240120
421-54-22750	K0210-05D5	1	240130
421-09-12780	K0210-05D5	2	240130
23S-55-51530	K0210-05D5	3	240130
418-54-33520	K0210-05D5	4	240130
01643-31232	K0210-05D5	5	240130
01010-81020	K0210-05D5	6	240130
01643-31032	K0210-05D5	7	240130
419-54-B5530	K0210-05D5	8	240130
419-54-32672	K0210-05D5	8	240130
01225-70616	K0210-05D5	9	240130
418-926-3490	K0210-05D5	10	240130
418-54-32424	K0210-05D5	11	240130
01010-80616	K0210-05D5	12	240130
01643-30623	K0210-05D5	13	240130
418-926-3490	K0210-05D5	14	240130
01225-70616	K0210-05D5	15	240130
418-43-38311	K0210-05D5	16	240130
418-926-3490	K0210-05D5	17	240130
01225-70616	K0210-05D5	18	240130
418-54-32774	K0210-05D5	19	240130
421-54-22750	K0210-05D5	20	240130
421-09-12780	K0210-05D5	20A	240130
23S-55-51530	K0210-05D5	21	240130
418-54-33520	K0210-05D5	22	240130
01225-70616	K0210-05D5	23	240130
418-926-3490	K0210-05D5	24	240130
418-43-31241	K0210-05D5	25	240130
421-43-31520	K0210-05D5	26	240130
01010-80616	K0210-05D5	27	240130
01643-30623	K0210-05D5	28	240130
421-43-31551	K0210-05D5	29	240130
418-54-32241	K0210-05D5	30	240130
01010-81020	K0210-05D5	31	240130
01643-31032	K0210-05D5	32	240130
09415-01610	K0210-05D5	33	240130
421-54-22750	K0210-05D5	1	240140
421-09-12780	K0210-05D5	2	240140
23S-55-51530	K0210-05D5	3	240140
418-54-33520	K0210-05D5	4	240140
01643-31232	K0210-05D5	5	240140
01010-81020	K0210-05D5	6	240140
01643-31032	K0210-05D5	7	240140
419-54-B5530	K0210-05D5	8	240140
419-54-32672	K0210-05D5	8	240140
01225-70616	K0210-05D5	9	240140
418-926-3490	K0210-05D5	10	240140
418-54-32424	K0210-05D5	11	240140
01010-80616	K0210-05D5	12	240140
01643-30623	K0210-05D5	13	240140
418-926-3490	K0210-05D5	14	240140
01225-70616	K0210-05D5	15	240140
418-43-38311	K0210-05D5	16	240140
418-926-3490	K0210-05D5	17	240140
01225-70616	K0210-05D5	18	240140
418-54-32774	K0210-05D5	19	240140
421-54-22750	K0210-05D5	20	240140
421-09-12780	K0210-05D5	20A	240140
23S-55-51530	K0210-05D5	21	240140
418-54-33520	K0210-05D5	22	240140
01225-70616	K0210-05D5	23	240140
418-926-3490	K0210-05D5	24	240140
418-43-31241	K0210-05D5	25	240140
421-43-31520	K0210-05D5	26	240140
01010-80616	K0210-05D5	27	240140
01643-30623	K0210-05D5	28	240140
421-43-31551	K0210-05D5	29	240140
418-54-32241	K0210-05D5	30	240140
01010-81020	K0210-05D5	31	240140
01643-31032	K0210-05D5	32	240140
09415-01610	K0210-05D5	33	240140
421-54-22750	K0210-05D5	1	240150
421-09-12780	K0210-05D5	2	240150
23S-55-51530	K0210-05D5	3	240150
418-54-33520	K0210-05D5	4	240150
01643-31232	K0210-05D5	5	240150
01010-81020	K0210-05D5	6	240150
01643-31032	K0210-05D5	7	240150
419-54-B5530	K0210-05D5	8	240150
419-54-32672	K0210-05D5	8	240150
01225-70616	K0210-05D5	9	240150
418-926-3490	K0210-05D5	10	240150
418-54-32424	K0210-05D5	11	240150
01010-80616	K0210-05D5	12	240150
01643-30623	K0210-05D5	13	240150
418-926-3490	K0210-05D5	14	240150
01225-70616	K0210-05D5	15	240150
418-43-38311	K0210-05D5	16	240150
418-926-3490	K0210-05D5	17	240150
01225-70616	K0210-05D5	18	240150
418-54-32774	K0210-05D5	19	240150
421-54-22750	K0210-05D5	20	240150
421-09-12780	K0210-05D5	20A	240150
23S-55-51530	K0210-05D5	21	240150
418-54-33520	K0210-05D5	22	240150
01225-70616	K0210-05D5	23	240150
418-926-3490	K0210-05D5	24	240150
418-43-31241	K0210-05D5	25	240150
421-43-31520	K0210-05D5	26	240150
01010-80616	K0210-05D5	27	240150
01643-30623	K0210-05D5	28	240150
421-43-31551	K0210-05D5	29	240150
418-54-32241	K0210-05D5	30	240150
01010-81020	K0210-05D5	31	240150
01643-31032	K0210-05D5	32	240150
09415-01610	K0210-05D5	33	240150
421-54-22750	K0210-05D5	1	240160
421-09-12780	K0210-05D5	2	240160
23S-55-51530	K0210-05D5	3	240160
418-54-33520	K0210-05D5	4	240160
01643-31232	K0210-05D5	5	240160
01010-81020	K0210-05D5	6	240160
01643-31032	K0210-05D5	7	240160
419-54-B5530	K0210-05D5	8	240160
419-54-32672	K0210-05D5	8	240160
01225-70616	K0210-05D5	9	240160
418-926-3490	K0210-05D5	10	240160
418-54-32424	K0210-05D5	11	240160
01010-80616	K0210-05D5	12	240160
01643-30623	K0210-05D5	13	240160
418-926-3490	K0210-05D5	14	240160
01225-70616	K0210-05D5	15	240160
418-43-38311	K0210-05D5	16	240160
418-926-3490	K0210-05D5	17	240160
01225-70616	K0210-05D5	18	240160
418-54-32774	K0210-05D5	19	240160
421-54-22750	K0210-05D5	20	240160
421-09-12780	K0210-05D5	20A	240160
23S-55-51530	K0210-05D5	21	240160
418-54-33520	K0210-05D5	22	240160
01225-70616	K0210-05D5	23	240160
418-926-3490	K0210-05D5	24	240160
418-43-31241	K0210-05D5	25	240160
421-43-31520	K0210-05D5	26	240160
01010-80616	K0210-05D5	27	240160
01643-30623	K0210-05D5	28	240160
421-43-31551	K0210-05D5	29	240160
418-54-32241	K0210-05D5	30	240160
01010-81020	K0210-05D5	31	240160
01643-31032	K0210-05D5	32	240160
09415-01610	K0210-05D5	33	240160
421-54-22750	K0210-05D5	1	240170
421-09-12780	K0210-05D5	2	240170
23S-55-51530	K0210-05D5	3	240170
418-54-33520	K0210-05D5	4	240170
01643-31232	K0210-05D5	5	240170
01010-81020	K0210-05D5	6	240170
01643-31032	K0210-05D5	7	240170
419-54-B5530	K0210-05D5	8	240170
419-54-32672	K0210-05D5	8	240170
01225-70616	K0210-05D5	9	240170
418-926-3490	K0210-05D5	10	240170
418-54-32424	K0210-05D5	11	240170
01010-80616	K0210-05D5	12	240170
01643-30623	K0210-05D5	13	240170
418-926-3490	K0210-05D5	14	240170
01225-70616	K0210-05D5	15	240170
418-43-38311	K0210-05D5	16	240170
418-926-3490	K0210-05D5	17	240170
01225-70616	K0210-05D5	18	240170
418-54-32774	K0210-05D5	19	240170
421-54-22750	K0210-05D5	20	240170
421-09-12780	K0210-05D5	20A	240170
23S-55-51530	K0210-05D5	21	240170
418-54-33520	K0210-05D5	22	240170
01225-70616	K0210-05D5	23	240170
418-926-3490	K0210-05D5	24	240170
418-43-31241	K0210-05D5	25	240170
421-43-31520	K0210-05D5	26	240170
01010-80616	K0210-05D5	27	240170
01643-30623	K0210-05D5	28	240170
421-43-31551	K0210-05D5	29	240170
418-54-32241	K0210-05D5	30	240170
01010-81020	K0210-05D5	31	240170
01643-31032	K0210-05D5	32	240170
09415-01610	K0210-05D5	33	240170
421-54-22750	K0210-05D5	1	240180
421-09-12780	K0210-05D5	2	240180
23S-55-51530	K0210-05D5	3	240180
418-54-33520	K0210-05D5	4	240180
01643-31232	K0210-05D5	5	240180
01010-81020	K0210-05D5	6	240180
01643-31032	K0210-05D5	7	240180
419-54-B5530	K0210-05D5	8	240180
419-54-32672	K0210-05D5	8	240180
01225-70616	K0210-05D5	9	240180
418-926-3490	K0210-05D5	10	240180
418-54-32424	K0210-05D5	11	240180
01010-80616	K0210-05D5	12	240180
01643-30623	K0210-05D5	13	240180
418-926-3490	K0210-05D5	14	240180
01225-70616	K0210-05D5	15	240180
418-43-38311	K0210-05D5	16	240180
418-926-3490	K0210-05D5	17	240180
01225-70616	K0210-05D5	18	240180
418-54-32774	K0210-05D5	19	240180
421-54-22750	K0210-05D5	20	240180
421-09-12780	K0210-05D5	20A	240180
23S-55-51530	K0210-05D5	21	240180
418-54-33520	K0210-05D5	22	240180
01225-70616	K0210-05D5	23	240180
418-926-3490	K0210-05D5	24	240180
418-43-31241	K0210-05D5	25	240180
421-43-31520	K0210-05D5	26	240180
01010-80616	K0210-05D5	27	240180
01643-30623	K0210-05D5	28	240180
421-43-31551	K0210-05D5	29	240180
418-54-32241	K0210-05D5	30	240180
01010-81020	K0210-05D5	31	240180
01643-31032	K0210-05D5	32	240180
09415-01610	K0210-05D5	33	240180
421-54-22750	K0210-05D5	1	240190
421-09-12780	K0210-05D5	2	240190
23S-55-51530	K0210-05D5	3	240190
418-54-33520	K0210-05D5	4	240190
01643-31232	K0210-05D5	5	240190
01010-81020	K0210-05D5	6	240190
01643-31032	K0210-05D5	7	240190
419-54-B5530	K0210-05D5	8	240190
419-54-32672	K0210-05D5	8	240190
01225-70616	K0210-05D5	9	240190
418-926-3490	K0210-05D5	10	240190
418-54-32424	K0210-05D5	11	240190
01010-80616	K0210-05D5	12	240190
01643-30623	K0210-05D5	13	240190
418-926-3490	K0210-05D5	14	240190
01225-70616	K0210-05D5	15	240190
418-43-38311	K0210-05D5	16	240190
418-926-3490	K0210-05D5	17	240190
01225-70616	K0210-05D5	18	240190
418-54-32774	K0210-05D5	19	240190
421-54-22750	K0210-05D5	20	240190
421-09-12780	K0210-05D5	20A	240190
23S-55-51530	K0210-05D5	21	240190
418-54-33520	K0210-05D5	22	240190
01225-70616	K0210-05D5	23	240190
418-926-3490	K0210-05D5	24	240190
418-43-31241	K0210-05D5	25	240190
421-43-31520	K0210-05D5	26	240190
01010-80616	K0210-05D5	27	240190
01643-30623	K0210-05D5	28	240190
421-43-31551	K0210-05D5	29	240190
418-54-32241	K0210-05D5	30	240190
01010-81020	K0210-05D5	31	240190
01643-31032	K0210-05D5	32	240190
09415-01610	K0210-05D5	33	240190
421-54-22750	K0210-05D5	1	240200
421-09-12780	K0210-05D5	2	240200
23S-55-51530	K0210-05D5	3	240200
418-54-33520	K0210-05D5	4	240200
01643-31232	K0210-05D5	5	240200
01010-81020	K0210-05D5	6	240200
01643-31032	K0210-05D5	7	240200
419-54-B5530	K0210-05D5	8	240200
419-54-32672	K0210-05D5	8	240200
01225-70616	K0210-05D5	9	240200
418-926-3490	K0210-05D5	10	240200
418-54-32424	K0210-05D5	11	240200
01010-80616	K0210-05D5	12	240200
01643-30623	K0210-05D5	13	240200
418-926-3490	K0210-05D5	14	240200
01225-70616	K0210-05D5	15	240200
418-43-38311	K0210-05D5	16	240200
418-926-3490	K0210-05D5	17	240200
01225-70616	K0210-05D5	18	240200
418-54-32774	K0210-05D5	19	240200
421-54-22750	K0210-05D5	20	240200
421-09-12780	K0210-05D5	20A	240200
23S-55-51530	K0210-05D5	21	240200
418-54-33520	K0210-05D5	22	240200
01225-70616	K0210-05D5	23	240200
418-926-3490	K0210-05D5	24	240200
418-43-31241	K0210-05D5	25	240200
421-43-31520	K0210-05D5	26	240200
01010-80616	K0210-05D5	27	240200
01643-30623	K0210-05D5	28	240200
421-43-31551	K0210-05D5	29	240200
418-54-32241	K0210-05D5	30	240200
01010-81020	K0210-05D5	31	240200
01643-31032	K0210-05D5	32	240200
09415-01610	K0210-05D5	33	240200
421-54-22750	K0210-05D5	1	240210
421-09-12780	K0210-05D5	2	240210
23S-55-51530	K0210-05D5	3	240210
418-54-33520	K0210-05D5	4	240210
01643-31232	K0210-05D5	5	240210
01010-81020	K0210-05D5	6	240210
01643-31032	K0210-05D5	7	240210
419-54-B5530	K0210-05D5	8	240210
419-54-32672	K0210-05D5	8	240210
01225-70616	K0210-05D5	9	240210
418-926-3490	K0210-05D5	10	240210
418-54-32424	K0210-05D5	11	240210
01010-80616	K0210-05D5	12	240210
01643-30623	K0210-05D5	13	240210
418-926-3490	K0210-05D5	14	240210
01225-70616	K0210-05D5	15	240210
418-43-38311	K0210-05D5	16	240210
418-926-3490	K0210-05D5	17	240210
01225-70616	K0210-05D5	18	240210
418-54-32774	K0210-05D5	19	240210
421-54-22750	K0210-05D5	20	240210
421-09-12780	K0210-05D5	20A	240210
23S-55-51530	K0210-05D5	21	240210
418-54-33520	K0210-05D5	22	240210
01225-70616	K0210-05D5	23	240210
418-926-3490	K0210-05D5	24	240210
418-43-31241	K0210-05D5	25	240210
421-43-31520	K0210-05D5	26	240210
01010-80616	K0210-05D5	27	240210
01643-30623	K0210-05D5	28	240210
421-43-31551	K0210-05D5	29	240210
418-54-32241	K0210-05D5	30	240210
01010-81020	K0210-05D5	31	240210
01643-31032	K0210-05D5	32	240210
09415-01610	K0210-05D5	33	240210
421-54-22750	K0210-05D5	1	240220
421-09-12780	K0210-05D5	2	240220
23S-55-51530	K0210-05D5	3	240220
418-54-33520	K0210-05D5	4	240220
01643-31232	K0210-05D5	5	240220
01010-81020	K0210-05D5	6	240220
01643-31032	K0210-05D5	7	240220
419-54-B5530	K0210-05D5	8	240220
419-54-32672	K0210-05D5	8	240220
01225-70616	K0210-05D5	9	240220
418-926-3490	K0210-05D5	10	240220
418-54-32424	K0210-05D5	11	240220
01010-80616	K0210-05D5	12	240220
01643-30623	K0210-05D5	13	240220
418-926-3490	K0210-05D5	14	240220
01225-70616	K0210-05D5	15	240220
418-43-38311	K0210-05D5	16	240220
418-926-3490	K0210-05D5	17	240220
01225-70616	K0210-05D5	18	240220
418-54-32774	K0210-05D5	19	240220
421-54-22750	K0210-05D5	20	240220
421-09-12780	K0210-05D5	20A	240220
23S-55-51530	K0210-05D5	21	240220
418-54-33520	K0210-05D5	22	240220
01225-70616	K0210-05D5	23	240220
418-926-3490	K0210-05D5	24	240220
418-43-31241	K0210-05D5	25	240220
421-43-31520	K0210-05D5	26	240220
01010-80616	K0210-05D5	27	240220
01643-30623	K0210-05D5	28	240220
421-43-31551	K0210-05D5	29	240220
418-54-32241	K0210-05D5	30	240220
01010-81020	K0210-05D5	31	240220
01643-31032	K0210-05D5	32	240220
09415-01610	K0210-05D5	33	240220
421-54-22750	K0210-05D5	1	240230
421-09-12780	K0210-05D5	2	240230
23S-55-51530	K0210-05D5	3	240230
418-54-33520	K0210-05D5	4	240230
01643-31232	K0210-05D5	5	240230
01010-81020	K0210-05D5	6	240230
01643-31032	K0210-05D5	7	240230
419-54-B5530	K0210-05D5	8	240230
419-54-32672	K0210-05D5	8	240230
01225-70616	K0210-05D5	9	240230
418-926-3490	K0210-05D5	10	240230
418-54-32424	K0210-05D5	11	240230
01010-80616	K0210-05D5	12	240230
01643-30623	K0210-05D5	13	240230
418-926-3490	K0210-05D5	14	240230
01225-70616	K0210-05D5	15	240230
418-43-38311	K0210-05D5	16	240230
418-926-3490	K0210-05D5	17	240230
01225-70616	K0210-05D5	18	240230
418-54-32774	K0210-05D5	19	240230
421-54-22750	K0210-05D5	20	240230
421-09-12780	K0210-05D5	20A	240230
23S-55-51530	K0210-05D5	21	240230
418-54-33520	K0210-05D5	22	240230
01225-70616	K0210-05D5	23	240230
418-926-3490	K0210-05D5	24	240230
418-43-31241	K0210-05D5	25	240230
421-43-31520	K0210-05D5	26	240230
01010-80616	K0210-05D5	27	240230
01643-30623	K0210-05D5	28	240230
421-43-31551	K0210-05D5	29	240230
418-54-32241	K0210-05D5	30	240230
01010-81020	K0210-05D5	31	240230
01643-31032	K0210-05D5	32	240230
09415-01610	K0210-05D5	33	240230
421-54-22750	K0210-05D5	1	240240
421-09-12780	K0210-05D5	2	240240
23S-55-51530	K0210-05D5	3	240240
418-54-33520	K0210-05D5	4	240240
01643-31232	K0210-05D5	5	240240
01010-81020	K0210-05D5	6	240240
01643-31032	K0210-05D5	7	240240
419-54-B5530	K0210-05D5	8	240240
419-54-32672	K0210-05D5	8	240240
01225-70616	K0210-05D5	9	240240
418-926-3490	K0210-05D5	10	240240
418-54-32424	K0210-05D5	11	240240
01010-80616	K0210-05D5	12	240240
01643-30623	K0210-05D5	13	240240
418-926-3490	K0210-05D5	14	240240
01225-70616	K0210-05D5	15	240240
418-43-38311	K0210-05D5	16	240240
418-926-3490	K0210-05D5	17	240240
01225-70616	K0210-05D5	18	240240
418-54-32774	K0210-05D5	19	240240
421-54-22750	K0210-05D5	20	240240
421-09-12780	K0210-05D5	20A	240240
23S-55-51530	K0210-05D5	21	240240
418-54-33520	K0210-05D5	22	240240
01225-70616	K0210-05D5	23	240240
418-926-3490	K0210-05D5	24	240240
418-43-31241	K0210-05D5	25	240240
421-43-31520	K0210-05D5	26	240240
01010-80616	K0210-05D5	27	240240
01643-30623	K0210-05D5	28	240240
421-43-31551	K0210-05D5	29	240240
418-54-32241	K0210-05D5	30	240240
01010-81020	K0210-05D5	31	240240
01643-31032	K0210-05D5	32	240240
09415-01610	K0210-05D5	33	240240
421-54-22750	K0210-05D5	1	240250
421-09-12780	K0210-05D5	2	240250
23S-55-51530	K0210-05D5	3	240250
418-54-33520	K0210-05D5	4	240250
01643-31232	K0210-05D5	5	240250
01010-81020	K0210-05D5	6	240250
01643-31032	K0210-05D5	7	240250
419-54-B5530	K0210-05D5	8	240250
419-54-32672	K0210-05D5	8	240250
01225-70616	K0210-05D5	9	240250
418-926-3490	K0210-05D5	10	240250
418-54-32424	K0210-05D5	11	240250
01010-80616	K0210-05D5	12	240250
01643-30623	K0210-05D5	13	240250
418-926-3490	K0210-05D5	14	240250
01225-70616	K0210-05D5	15	240250
418-43-38311	K0210-05D5	16	240250
418-926-3490	K0210-05D5	17	240250
01225-70616	K0210-05D5	18	240250
418-54-32774	K0210-05D5	19	240250
421-54-22750	K0210-05D5	20	240250
421-09-12780	K0210-05D5	20A	240250
23S-55-51530	K0210-05D5	21	240250
418-54-33520	K0210-05D5	22	240250
01225-70616	K0210-05D5	23	240250
418-926-3490	K0210-05D5	24	240250
418-43-31241	K0210-05D5	25	240250
421-43-31520	K0210-05D5	26	240250
01010-80616	K0210-05D5	27	240250
01643-30623	K0210-05D5	28	240250
421-43-31551	K0210-05D5	29	240250
418-54-32241	K0210-05D5	30	240250
01010-81020	K0210-05D5	31	240250
01643-31032	K0210-05D5	32	240250
09415-01610	K0210-05D5	33	240250
421-54-22750	K0210-05D5	1	240260
421-09-12780	K0210-05D5	2	240260
23S-55-51530	K0210-05D5	3	240260
418-54-33520	K0210-05D5

PARTS Nº	FIG. Nº	INDEX	PAGE
702-16-03851	K0210-09B6	1	240220
418-43-36184	K0210-09B6	2	240220
01582-11411	K0210-09B6	3	240220
01010-80820	K0210-09B6	4	240220
01643-30823	K0210-09B6	5	240220
01010-81016	K0210-09B6	6	240220
01643-31032	K0210-09B6	7	240220
702-16-03740	K0210-09B6	8	240220
418-S35-3111	K0210-09B6	9	240220
418-43-38190	K0210-09B6	10	240220
421-43-28410	K0210-09B6	11	240220
421-09-21230	K0210-09B6	12	240220
01582-11411	K0210-09B6	13	240220
01010-80820	K0210-09B6	14	240220
01643-30823	K0210-09B6	15	240220
418-43-38142	K0210-09B6	16	240220
09305-00800	K0210-09B6	17	240220
04025-00520	K0210-09B6	18	240220
418-43-38131	K0210-09B6	19	240220
421-09-21220	K0210-09B6	20	240220
203-43-21370	K0210-09B6	21	240220
418-43-38120	K0210-09B6	22	240220
04256-40615	K0210-09B6	23	240220
418-43-28150	K0210-09B6	24	240220
01580-10605	K0210-09B6	25	240220
01508-40603	K0210-09B6	26	240220
04256-50616	K0210-09B6	27	240220
418-43-38112	K0210-09B6	28	240220
01010-81220	K0210-09B6	29	240220
01643-31232	K0210-09B6	30	240220
20Y-62-15651	K0210-09B6	31	240220
07283-33442	K0210-09B6	32	240220
01643-31032	K0210-09B6	33	240220
01597-01009	K0210-09B6	34	240220
426-09-11130	K0210-09B6	35	240220
702-16-03851	K0210-09C5	1	240230
418-43-38163	K0210-09C5	2	240230
01010-80820	K0210-09C5	3	240230
01643-30823	K0210-09C5	4	240230
01582-11411	K0210-09C5	5	240230
418-43-38142	K0210-09C5	6	240230
09305-00800	K0210-09C5	7	240230
04025-00520	K0210-09C5	8	240230
418-43-38131	K0210-09C5	9	240230
421-09-21220	K0210-09C5	10	240230
203-43-21370	K0210-09C5	11	240230
418-43-38120	K0210-09C5	12	240230
04256-40615	K0210-09C5	13	240230
418-43-28150	K0210-09C5	14	240230
01580-10605	K0210-09C5	15	240230

PARTS Nº	FIG. Nº	INDEX	PAGE
01508-40603	K0210-09C5	16	240230
04256-50616	K0210-09C5	17	240230
418-43-38112	K0210-09C5	18	240230
01010-81220	K0210-09C5	19	240230
01643-31232	K0210-09C5	20	240230
20Y-62-15651	K0210-09C5	21	240230
07283-33442	K0210-09C5	22	240230
01643-31032	K0210-09C5	23	240230
01597-01009	K0210-09C5	24	240230
426-09-11130	K0210-09C5	25	240230
702-16-03851	K0210-09C6	1	240240
418-43-38163	K0210-09C6	2	240240
01010-80820	K0210-09C6	3	240240
01643-30823	K0210-09C6	4	240240
01582-11411	K0210-09C6	5	240240
702-16-03370	K0210-09C6	6	240240
421-43-28410	K0210-09C6	7	240240
418-U77-3761	K0210-09C6	8	240240
421-09-21230	K0210-09C6	9	240240
421-43-28431	K0210-09C6	10	240240
01582-11411	K0210-09C6	11	240240
01010-81025	K0210-09C6	12	240240
01643-31032	K0210-09C6	13	240240
21W-62-41780	K0210-09C6	14	240240
11Y-62-12140	K0210-09C6	15	240240
07000-12011	K0210-09C6	16	240240
02896-11008	K0210-09C6	17	240240
418-43-38142	K0210-09C6	18	240240
09305-00800	K0210-09C6	19	240240
04025-00520	K0210-09C6	20	240240
418-43-38131	K0210-09C6	21	240240
421-09-21220	K0210-09C6	22	240240
203-43-21370	K0210-09C6	23	240240
418-43-38120	K0210-09C6	24	240240
04256-40615	K0210-09C6	25	240240
418-43-28150	K0210-09C6	26	240240
01580-10605	K0210-09C6	27	240240
01508-40603	K0210-09C6	28	240240
04256-50616	K0210-09C6	29	240240
418-43-38112	K0210-09C6	30	240240
01010-81220	K0210-09C6	31	240240
01643-31232	K0210-09C6	32	240240
20Y-62-15651	K0210-09C6	33	240240
07283-33442	K0210-09C6	34	240240
01643-31032	K0210-09C6	35	240240
01597-01009	K0210-09C6	36	240240
426-09-11130	K0210-09C6	37	240240
01583-11408	K0210-09D5	1	240250
419-43-38130	K0210-09D5	2	240250
02782-10315	K0210-09D5	3	240250

PARTS Nº	FIG. Nº	INDEX	PAGE
02896-11009	K0210-09D5	4	240250
07002-12034	K0210-09D5	5	240250
02781-00315	K0210-09D5	6	240250
07002-12034	K0210-09D5	7	240250
02896-11009	K0210-09D5	8	240250
419-43-38391	K0210-09D5	9	240250
702-16-53240	K0210-09D5	10	240250
07000-12018	K0210-09D5	11	240250
21N-64-37130	K0210-09D5	12	240250
07002-11423	K0210-09D5	13	240250
02896-11009	K0210-09D5	14	240250
419-43-38340	K0210-09D5	15	240250
01583-11408	K0210-09D5	16	240250
419-43-38350	K0210-09D5	17	240250
419-43-38360	K0210-09D5	18	240250
419-43-38370	K0210-09D5	19	240250
419-43-38380	K0210-09D5	20	240250
01583-11408	K0210-09D5	21	240250
20Y-62-16170	K0210-09D5	22	240250
07000-12015	K0210-09D5	23	240250
01643-31445	K0210-09D5	24	240250
419-43-38130	K0210-09E5	1	240260
02782-10315	K0210-09E5	2	240260
02896-11009	K0210-09E5	3	240260
07002-12034	K0210-09E5	4	240260
02781-00315	K0210-09E5	5	240260
07002-12034	K0210-09E5	6	240260
02896-11009	K0210-09E5	7	240260
419-877-3540	K0210-09E5	8	240260
702-16-53240	K0210-09E5	9	240260
07000-12018	K0210-09E5	10	240260
419-U77-3671	K0210-09E5	11	240260
02896-11009	K0210-09E5	12	240260
02896-11008	K0210-09E5	12A	240260
419-U77-3510	K0210-09E5	13	240260
418-43-38440	K0210-09E5	14	240260
419-43-38340	K0210-09E5	15	240260
419-43-38350	K0210-09E5	16	240260
419-43-38360	K0210-09E5	17	240260
419-43-38370	K0210-09E5	18	240260
20Y-62-16170	K0210-09E5	19	240260
07000-12015	K0210-09E5	20	240260
419-877-3560	K0210-09E5	21	240260
419-U77-3592	K0210-09E5	22	240260
02896-11009	K0210-09E5	23	240260
02896-11008	K0210-09E5	23A	240260
419-U77-3540	K0210-09E5	24	240260
418-43-38460	K0210-09E5	25	240260
419-877-3510	K0210-09E5	26	240260
419-877-3520	K0210-09E5	27	240260

PARTS Nº	FIG. Nº	INDEX	PAGE
01583-11408	K0210-09E5	28	240260
01643-31445	K0210-09E5	29	240260
07000-12011	K0210-09E5	30	240260
01010-81220	K0210-09E5	31	240260
01643-31232	K0210-09E5	32	240260
419-43-38130	K0210-09E6	1	240270
02782-10315	K0210-09E6	2	240270
02896-11009	K0210-09E6	3	240270
07002-12034	K0210-09E6	4	240270
02781-00315	K0210-09E6	5	240270
07002-12034	K0210-09E6	6	240270
02896-11009	K0210-09E6	7	240270
419-U77-3520	K0210-09E6	8	240270
702-16-53240	K0210-09E6	9	240270
07000-12018	K0210-09E6	10	240270
419-U77-3671	K0210-09E6	11	240270
02896-11009	K0210-09E6	12	240270
02896-11008	K0210-09E6	13	240270
419-U77-3510	K0210-09E6	14	240270
418-S35-3130	K0210-09E6	15	240270
20Y-62-18910	K0210-09E6	16	240270
07000-02018	K0210-09E6	17	240270
21N-64-37130	K0210-09E6	18	240270
07002-11423	K0210-09E6	19	240270
02896-11009	K0210-09E6	20	240270
419-43-38240	K0210-09E6	21	240270
419-43-38250	K0210-09E6	22	240270
419-43-38260	K0210-09E6	23	240270
419-43-38270	K0210-09E6	24	240270
20Y-62-16170	K0210-09E6	25	240270
07000-02015	K0210-09E6	26	240270
419-U77-3550	K0210-09E6	27	240270
419-U77-3592	K0210-09E6	28	240270
02896-11009	K0210-09E6	29	240270
02896-11008	K0210-09E6	30	240270
419-U77-3540	K0210-09E6	31	240270
418-S35-3180	K0210-09E6	32	240270
20Y-62-18890	K0210-09E6	33	240270
07000-02015	K0210-09E6	34	240270
419-S35-3150	K0210-09E6	35	240270
07000-12011	K0210-09E6	36	240270
419-S35-3170	K0210-09E6	37	240270
07000-12011	K0210-09E6	38	240270
419-S35-3140	K0210-09E6	39	240270
07000-12011	K0210-09E6	40	240270
419-S35-3160	K0210-09E6	41	240270
07000-12011	K0210-09E6	42	240270
01583-11408	K0210-09E6	43	240270
01643-31445	K0210-09E6	44	240270
01010-81220	K0210-09E6	45	240270

PARTS Nº	FIG. Nº	INDEX	PAGE
01643-31232	K0210-09E6	46	240270
419-43-38130	K0210-09F5	1	240280
02782-10315	K0210-09F5	2	240280
02896-11009	K0210-09F5	3	240280
07002-12034	K0210-09F5	4	240280
02781-00315	K0210-09F5	5	240280
07002-12034	K0210-09F5	6	240280
02896-11009	K0210-09F5	7	240280
419-U77-3520	K0210-09F5	8	240280
702-16-53240	K0210-09F5	9	240280
07000-12018	K0210-09F5	10	240280
419-U77-3671	K0210-09F5	11	240280
02896-11009	K0210-09F5	12	240280
02896-11008	K0210-09F5	13	240280
419-U77-3510	K0210-09F5	14	240280
21N-64-37130	K0210-09F5	15	240280
07002-11423	K0210-09F5	16	240280
02896-11009	K0210-09F5	17	240280
419-43-38240	K0210-09F5	18	240280
419-43-38250	K0210-09F5	19	240280
419-43-38260	K0210-09F5	20	240280
419-43-38270	K0210-09F5	21	240280
20Y-62-16170	K0210-09F5	22	240280
07000-12015	K0210-09F5	23	240280
419-U77-3550	K0210-09F5	24	240280
419-U77-3592	K0210-09F5	25	240280
02896-11009	K0210-09F5	26	240280
02896-11008	K0210-09F5	27	240280
419-U77-3540	K0210-09F5	28	240280
01583-11408	K0210-09F5	29	240280
01643-31445	K0210-09F5	30	240280
01010-81220	K0210-09F5	31	240280
01643-31232	K0210-09F5	32	240280
419-43-38130	K0210-10A0	1	240290
02782-10315	K0210-10A0	2	240290
02896-11009	K0210-10A0	3	240290
07002-12034	K0210-10A0	4	240290
02781-00315	K0210-10A0	5	240290
07002-12034	K0210-10A0	6	240290
02896-11009	K0210-10A0	7	240290
419-U77-3520	K0210-10A0	8	240290
702-16-53240	K0210-10A0	9	240290
07000-12018	K0210-10A0	10	240290
419-U77-3671	K0210-10A0	11	240290
02896-11009	K0210-10A0	12	240290
02896-11008	K0210-10A0	13	240290
419-U77-3510	K0210-10A0	14	240290
419-U77-3532	K0210-10A0	15	240290
21N-64-37130	K0210-10A0	16	240290
07002-11423	K0210-10A0	17	240290

PARTS Nº	FIG. Nº	INDEX	PAGE
02896-11009	K0210-10A0	18	240290
419-43-38240	K0210-10A0	19	240290
419-43-38250	K0210-10A0	20	240290
419-43-38260	K0210-10A0	21	240290
419-43-38270	K0210-10A0	22	240290
20Y-62-16170	K0210-10A0	23	240290
07000-12015	K0210-10A0	24	240290
419-U77-3550	K0210-10A0	25	240290
419-U77-3592	K0210-10A0	26	240290
02896-11009	K0210-10A0	27	240290
02896-11008	K0210-10A0	28	240290
419-U77-3540	K0210-10A0	29	240290
418-U77-3560	K0210-10A0	30	240290
419-U77-3570	K0210-10A0	31	240290
07000-12011	K0210-10A0	32	240290
419-U77-3580	K0210-10A0	33	240290
07000-12011	K0210-10A0	34	240290
01583-11408	K0210-10A0	35	240290
01643-31445	K0210-10A0	36	240290
01010-81220	K0210-10A0	37	240290
01643-31232	K0210-10A0	38	240290
418-43-47110	K0210-11A0	1	240300
418-43-37111	K0210-11A0	1	240300
363-43-37410	K0210-11A0	2	240300
417-43-27410	K0210-11A0	3	240300
417-43-27420	K0210-11A0	4	240300
418-43-37410	K0210-11A0	5	240300
01252-71040	K0210-11A0	6	240300
01252-81035	K0210-11A0	6	240300
01643-31032	K0210-11A0	7	240300
01643-71032	K0210-11A0	8	240300
01582-11210	K0210-11A0	9	240300
04256-41230	K0210-11A0	10	240300
01595-01210	K0210-11A0	11	240300
01643-31232	K0210-11A0	12	240300
04256-41230	K0210-11A0	13	240300
01595-01210	K0210-11A0	14	240300
01643-31232	K0210-11A0	15	240300
01582-11210	K0210-11A0	16	240300
418-43-37140	K0210-11A0	17	240300
418-43-37130	K0210-11A0	18	240300
01010-81265	K0210-11A0	19	240300
417-43-27120	K0210-11A0	20	240300
418-43-37120	K0210-11A0	21	240300
06124-02520	K0210-11A0	22	240300
419-43-37100	K0210-11A0	23	240300
01010-81035	K0210-11A0	24	240300
01643-31032	K0210-11A0	25	240300
21W-62-43980	K0210-11A0	26	240300
418-T80-3281	K0210-11A0	27	240300

PARTS Nº	FIG. Nº	INDEX	PAGE
419-43-37570	K0210-11A0	28	240300
07000-12011	K0210-11A0	29	240300
02896-11008	K0210-11A0	30	240300
02896-11009	K0210-11A0	31	240300
02767-B0306	K0210-11A0	32	240300
02767-B03A4	K0210-11A0	33	240300
56B-88-12320	K0210-11A0	34	240300
07000-12014	K0210-11A0	35	240300
02896-11009	K0210-11A0	36	240300
419-43-31031	K0210-11A0	37	240300
04434-51610	K0210-11A0	38	240300
01643-31032	K0210-11A0	39	240300
01010-81020	K0210-11A0	40	240300
418-43-37230	K0210-11A0	41	240300
07002-11423	K0210-11A0	42	240300
04434-50610	K0210-11A0	43	240300
01010-31016	K0210-11A0	44	240300
01643-31032	K0210-11A0	45	240300
419-18-31331	K0210-12A0	1	240310
07002-11023	K0210-12A0	2	240310
02896-11009	K0210-12A0	3	240310
07040-11007	K0210-12A0	4	240310
07000-12011	K0210-12A0	5	240310
418-T80-3281	K0210-12A0	6	240310
419-43-37580	K0210-12A0	7	240310
418-18-31131	K0210-12A0	8	240310
01010-81020	K0210-12A0	9	240310
01643-31032	K0210-12A0	10	240310
419-18-31403	K0210-13A0	1	240320
01010-80625	K0210-13A0	2	240320
01643-30623	K0210-13A0	3	240320
419-18-31710	K0210-13A1	1	240330
01010-80630	K0210-13A1	2	240330
01643-30623	K0210-13A1	3	240330
416-942-1550	K0210-14A0	1	240340
09483-10502	K0210-14A0	2	240340
09479-02400	K0210-14A0	3	240340
416-942-1550	K0210-14A0	4	240340
09483-10502	K0210-14A0	5	240340
09479-02400	K0210-14A0	6	240340
418-S62-3350	K0210-14A0	7	240340
418-07-31150	K0210-14A0	8	240340
01010-80612	K0210-14A0	9	240340
01643-30623	K0210-14A0	10	240340
421-07-11550	K0210-14A0	11	240340
01010-81020	K0210-14A0	12	240340
01643-31032	K0210-14A0	13	240340
08036-00814	K0210-15A0	1	240350
01010-81020	K0210-15A0	2	240350
01643-31032	K0210-15A0	3	240350
418-S62-3350	K0210-15A0	4	240350
421-07-23980	K0210-15A0	5	240350
01010-80630	K0210-15A0	6	240350
01643-30623	K0210-15A0	7	240350
421-54-13850	K0210-15A0	8	240350
418-S62-3211	K0210-15A0	9	240350
421-07-21810	K0210-15A0	10	240350
418-S62-3221	K0210-15A0	11	240350
01010-80630	K0210-15A0	12	240350
01643-30623	K0210-15A0	13	240350
04434-51610	K0210-15A0	14	240350
01010-81020	K0210-15A0	15	240350
01643-31032	K0210-15A0	16	240350
08086-20100	K0210-16A5	1	240360
418-06-32111	K0210-16A5	2	240360
08038-00518	K0210-16A5	3	240360
421-06-26110	K0210-17A0	1	240370
421-06-26120	K0210-17A0	1	240370
421-06-26130	K0210-17A0	2	240370
421-06-26140	K0210-17A0	3	240370
421-06-26150	K0210-17A0	4	240370
421-06-26160	K0210-17A0	5	240370
418-07-36111	K0210-18A0	1	240380
418-07-36140	K0210-18A0	2	240380
195-979-8590	K0210-18A0	3	240380
421-07-15110	K0210-18A0	3	240380
08034-40521	K0210-18A0	4	240380
421-54-15520	K0210-18A0	5	240380
418-07-36160	K0210-18B0	1	240390
418-07-36170	K0210-18B0	2	240390
421-07-15110	K0210-18B0	3	240390
08034-40521	K0210-18B0	4	240390
421-54-15520	K0210-18B0	5	240390
120-Y79-5760	K0210-18B0	6	240390
418-923-3610	K0210-18B0	7	240390
418-06-32484	K0210-19A5	1	240400
418-06-32483	K0210-19A5	1	240400
04434-53212	K0210-19A5	2	240400
04434-53412	K0210-19A5	3	240400
23S-62-25850	K0210-19A5	4	240400
04434-51912	K0210-19A5	5	240400
04434-52312	K0210-19A5	6	240400
01010-81016	K0210-19A5	7	240400
01643-31032	K0210-19A5	8	240400
08034-20519	K0210-19A5	9	240400
417-06-22410	K0210-19A5	10	240400
418-06-32452	K0210-19A5	11	240400
07049-01012	K0210-19A5	12	240400
01010-80625	K0210-19A5	13	240400
01643-30623	K0210-19A5	14	240400
418-06-31610	K0210-19A5	15	240400
418-06-31640	K0210-19A5	16	240400
07049-01012	K0210-19A5	17	240400
01010-80625	K0210-19A5	18	240400
01010-80612	K0210-19A5	18	240400
01643-30623	K0210-19A5	19	240400
01643-30623	K0210-19A5	19	240400
419-06-31333	K0210-19A5	20	240400
01010-81016	K0210-19A5	21	240400
01643-31032	K0210-19A5	22	240400
419-06-31343	K0210-19A5	23	240400
01010-81016	K0210-19A5	24	240400
01643-31032	K0210-19A5	25	240400
418-06-31381	K0210-19A5	26	240400
01010-81025	K0210-19A5	27	240400
01643-31032	K0210-19A5	28	240400
08059-00310	K0210-19A5	29	240400
04434-53412	K0210-19A5	30	240400
01010-81020	K0210-19A5	31	240400
01643-31032	K0210-19A5	32	240400
417-06-12560	K0210-19A5	33	240400
418-06-32750	K0210-19B5	1	240410
04434-53212	K0210-19B5	2	240410
04434-53412	K0210-19B5	3	240410
23S-62-25850	K0210-19B5	4	240410
04434-51912	K0210-19B5	5	240410
04434-52312	K0210-19B5	6	240410
01010-80625	K0210-19B5	7	240410
01643-30623	K0210-19B5	8	240410
01010-81016	K0210-19B5	9	240410
417-06-22410	K0210-19B5	10	240410
418-06-32452	K0210-19B5	11	240410
07049-01012	K0210-19B5	12	240410
01010-80625	K0210-19B5	13	240410
01643-30623	K0210-19B5	14	240410
419-06-31333	K0210-19B5	20	240410
01010-81016	K0210-19B5	21	240410
01643-31032	K0210-19B5	22	240410
419-06-31343	K0210-19B5	23	240410
01010-81016	K0210-19B5	24	240410
01643-31032	K0210-19B5	25	240410
418-06-31381	K0210-19B5	26	240410
01010-81025	K0210-19B5	27	240410
01643-31032	K0210-19B5	28	240410
08059-00310	K0210-19B5	29	240410
04434-53412	K0210-19B5	30	240410
01010-81020	K0210-19B5	31	240410
01643-31032	K0210-19B5	32	240410
417-06-12560	K0210-19B5	33	240410
08028-AB030	K0210-20A0	1	240420
01010-81016	K0210-20A0	2	240420
01643-31032	K0210-20A0	3	240420
283-06-16190	K0210-21A5	1	240430
22W-06-13160	K0210-21A5	2	240430
283-06-16120	K0210-21A5	3	240430
283-06-16190	K0210-21A5	4	240430
22W-06-13160	K0210-21A5	5	240430
283-06-16120	K0210-21A5	6	240430
01220-40520	K0210-21A5	7	240430
01641-20508	K0210-21A5	8	240430
421-06-26220	K0210-21A5	9	240430
01010-80610	K0210-21A5	10	240430
01643-30623	K0210-21A5	11	240430
23S-05-35320	K0210-21A5	12	240430
01220-40412	K0210-21A5	13	240430
01641-20405	K0210-21A5	14	240430
421-06-36232	K0210-21A5	15	240430
421-06-36231	K0210-21A5	15	240430
416-54-32770	K0210-21A5	16	240430
416-54-32790	K0210-21A5	17	240430
421-06-36241	K0210-21A5	18	240430
416-06-22250	K0210-21A5	19	240430
01010-80612	K0210-21A5	20	240430
01643-30623	K0210-21A5	21	240430
418-06-36370	K0210-21A5	22	240430
22U-06-22420	K0210-21A5	23	240430
22U-06-22470	K0210-21A5	24	240430
01010-80612	K0210-21A5	25	240430
01643-30623	K0210-21A5	26	240430
418-06-36230	K0210-21A5	27	240430
418-54-32990	K0210-21A5	28	240430
01010-80616	K0210-21A5	29	240430
01643-30623	K0210-21A5	30	240430
569-06-61960	K0210-21A5	31	240430
569-06-61970	K0210-21A5	32	240430
01010-80616	K0210-21A5	33	240430
01643-30623	K0210-21A5	34	240430
287-06-16420	K0210-21A5	35	240430
283-06-16190	K0210-22A0	1	240440
22W-06-13160	K0210-22A0	2	240440
283-06-16120	K0210-22A0	3	240440
283-06-16190	K0210-22A0	4	240440
22W-06-13160	K0210-22A0	5	240440
283-06-16120	K0210-22A0	6	240440
01220-40520	K0210-22A0	7	240440
01641-20508	K0210-22A0	8	240440
421-06-26220	K0210-22A0	9	240440
01010-80610	K0210-22A0	10	240440
01643-30623	K0210-22A0	11	240440
23S-05-35320	K0210-22A0	12	240440
01220-40412	K0210-22A0	13	240440
01641-20405	K0210-22A0	14	240440
283-06-16190	K0210-22A0	15	240440
22W-06-13160	K0210-22A0	16	240440
283-06-16120	K0210-22A0	17	240440
195-979-7290	K0210-22A0	18	240440
421-06-36241	K0210-22A0	19	240440
416-06-22250	K0210-22A0	20	240440
01010-80612	K0210-22A0	21	240440
01643-30623	K0210-22A0	22	240440
418-06-36370	K0210-22A0	23	240440
22U-06-22420	K0210-22A0	24	240440
22U-06-22470	K0210-22A0	25	240440
01010-80612	K0210-22A0	26	240440
01643-30623	K0210-22A0	27	240440
418-06-36230	K0210-22A0	28	240440
418-06-36380	K0210-22A0	29	240440
418-06-31490	K0210-23A5	1	240450
421-06-31510	K0210-23A5	2	240450
08191-00770	K0210-23A5	3	240450
418-06-35115	K0210-25A5	1	240460
418-06-35114	K0210-25A5	1	240460
418-06-35140	K0210-25A5	2	240460
418-06-35150	K0210-25A5	3	240460
418-06-35160	K0210-25A5	4	240460
418-06-36310	K0210-25A5	5	240460
418-06-36320	K0210-25A5	6	240460
418-06-36330	K0210-25A5	7	240460
418-06-36340	K0210-25A5	8	240460
418-06-36350	K0210-25A5	9	240460
418-06-36230	K0210-25A5	10	240460
01023-20616	K0210-25A5	11	240460
418-926-3613	K0210-25A5	12	240460
418-926-3652	K0210-25A5	13	240460
01010-80620	K0210-25A5	14	240460
01643-30623	K0210-25A5	15	240460
7823-30-5109	K0210-25B5	1	240470
7823-30-5108	K0210-25B5	1	240470
418-06-36310	K0210-25B5	2	240470
418-06-36320	K0210-25B5	3	240470
418-06-36330	K0210-25B5	4	240470
418-06-36340	K0210-25B5	5	240470
418-06-36350	K0210-25B5	6	240470
418-06-36230	K0210-25B5	7	240470
01023-10612	K0210-25B5	8	240470
01023-20616	K0210-25B5	8	240470
419-926-3612	K0210-25B5	9	240470
01010-80620	K0210-25B5	10	240470
01643-30623	K0210-25B5	11	240470
418-926-3652	K0210-25B5	12	240470
417-43-31120	K0210-26A0	1	240480
417-43-11210	K0210-26A0	1	240480
417-43-11220	K0210-26A0	2	240480
417-43-11230	K0210-26A0	3	240480
417-43-11240	K0210-26A0	4	240480
417-43-11250	K0210-26A0	5	240480
417-43-11260	K0210-26A0	6	240480
417-43-11270	K0210-26A0	7	240480
417-43-11280	K0210-26A0	8	240480
417-43-11290	K0210-26A0	9	240480
417-43-11310	K0210-26A0	10	240480
417-43-11320	K0210-26A0	11	240480
417-43-11330	K0210-26A0	12	240480
417-43-11340	K0210-26A0	13	240480
417-43-11350	K0210-26A0	14	240480
417-43-11360	K0210-26A0	15	240480
01010-80616	K0210-26A0	16	240480
01016-50870	K0210-26A0	17	240480
01580-10806	K0210-26A0	18	240480
01643-30623	K0210-26A0	19	240480
01010-D0630	K0210-26A0	20	240480
01643-70623	K0210-26A0	21	240480
04205-10620	K0210-26A0	22	240480
04050-11612	K0210-26A0	23	240480
419-43-31131	K0210-26A0	24	240480
421-43-31510	K0210-26A0	25	240480
04434-52110	K0210-26A0	26	240480
425-43-11180	K0210-26A0	27	240480
01010-81016	K0210-26A0	28	240480
01643-31032	K0210-26A0	29	240480
04210-20624	K0210-26A0	30	240480
424-43-11170	K0210-26A0	31	240480
418-43-18240	K0210-26A0	32	240480
01640-20610	K0210-26A0	33	240480
419-64-35103	K0210-27A0	1	240490
419-64-35102	K0210-27A0	1	240490
418-62-31412	K0210-27A0	2	240490
418-62-31421	K0210-27A0	3	240490
415-62-11560	K0210-27A0	4	240490
02896-11015	K0210-27A0	5	240490
419-62-41270	K0210-27A0	6	240490
56B-61-13650	K0210-27A0	6	240490
416-62-11480	K0210-27A0	7	240490
02896-11009	K0210-27A0	8	240490
419-43-38130	K0210-27A0A	1	240500

PARTS Nº	FIG. Nº	INDEX	PAGE
02782-10315	K0210-27A0A	2	240500
02896-11009	K0210-27A0A	3	240500
07002-12034	K0210-27A0A	4	240500
02781-00315	K0210-27A0A	5	240500
07002-12034	K0210-27A0A	6	240500
02896-11009	K0210-27A0A	7	240500
419-877-3540	K0210-27A0A	8	240500
702-16-53240	K0210-27A0A	9	240500
07000-12018	K0210-27A0A	10	240500
419-U77-3671	K0210-27A0A	11	240500
02896-11009	K0210-27A0A	12	240500
02896-11008	K0210-27A0A	13	240500
419-U77-3510	K0210-27A0A	14	240500
418-43-38440	K0210-27A0A	15	240500
419-43-38340	K0210-27A0A	16	240500
419-43-38350	K0210-27A0A	17	240500
419-43-38360	K0210-27A0A	18	240500
419-43-38370	K0210-27A0A	19	240500
20Y-62-16170	K0210-27A0A	20	240500
07000-12015	K0210-27A0A	21	240500
419-877-3560	K0210-27A0A	22	240500
419-U77-3592	K0210-27A0A	23	240500
02896-11009	K0210-27A0A	24	240500
02896-11008	K0210-27A0A	25	240500
419-U77-3540	K0210-27A0A	26	240500
418-43-38460	K0210-27A0A	27	240500
419-877-3510	K0210-27A0A	28	240500
419-877-3520	K0210-27A0A	29	240500
01583-11408	K0210-27A0A	30	240500
01643-31445	K0210-27A0A	31	240500
07000-12011	K0210-27A0A	32	240500
01010-81220	K0210-27A0A	33	240500
01643-31232	K0210-27A0A	34	240500
419-40-32160	K0210-28A0	1	240510
419-43-17920	K0210-28A0	2	240510
417-62-14130	K0210-28A0	3	240510
417-62-13620	K0210-28A0	4	240510
419-43-17930	K0210-28A0	5	240510
419-43-17920	K0210-28A0	6	240510
01010-81255	K0210-28A0	7	240510
01010-81040	K0210-28A0	8	240510
01643-31032	K0210-28A0	9	240510
419-40-32141	K0210-28A0	10	240510
417-40-22131	K0210-28A0	11	240510
417-40-22171	K0210-28A0	12	240510
417-40-22180	K0210-28A0	13	240510
417-40-22190	K0210-28A0	14	240510
417-40-22210	K0210-28A0	15	240510
417-40-22220	K0210-28A0	16	240510
417-40-22290	K0210-28A0	17	240510
417-40-22310	K0210-28A0	18	240510
417-40-22320	K0210-28A0	18	240510
417-40-22330	K0210-28A0	19	240510
417-40-22340	K0210-28A0	19	240510
417-40-22350	K0210-28A0	19	240510
421-40-22450	K0210-28A0	19	240510
421-40-22460	K0210-28A0	20	240510
421-40-22470	K0210-28A0	21	240510
421-40-22480	K0210-28A0	22	240510
419-40-32260	K0210-28A0	23	240510
421-40-22110	K0210-29A0	1	240520
421-40-22120	K0210-29A0	1	240520
421-40-22140	K0210-29A0	2	240520
421-40-22150	K0210-29A0	3	240520
421-40-22160	K0210-29A0	4	240520
421-40-22170	K0210-29A0	5	240520
421-40-22180	K0210-29A0	6	240520
421-40-22210	K0210-29A0	7	240520
362-43-15210	K0210-29A0	8	240520
362-43-15220	K0210-29A0	9	240520
419-40-32110	K0210-29A0	10	240520
01050-51030	K0210-29A0	11	240520
01602-21030	K0210-29A0	12	240520
08191-00770	K0210-29A0	13	240520
08192-22830	K0210-29A0	14	240520
418-40-32180	K0210-29A0	15	240520
418-40-32125	K0210-29A0	16	240520
01643-31032	K0210-29A0	17	240520
01596-01009	K0210-29A0	18	240520
01011-81035	K0210-29A0	19	240520
01010-81260	K0210-29A0	20	240520
419-43-17920	K0210-29A0	21	240520
419-43-17920	K0210-29A0	22	240520
417-62-13620	K0210-29A0	23	240520
417-62-14130	K0210-29A0	24	240520
419-43-17930	K0210-29A0	25	240520
419-43-17920	K0210-29A0	26	240520
01580-01210	K0210-29A0	27	240520
01643-31232	K0210-29A0	28	240520
08034-20536	K0210-29A0	29	240520
08017-30702	K0210-29A0	30	240520
419-40-32131	K0210-29A0	31	240520
01010-81230	K0210-29A0	32	240520
01010-81230	K0210-29A0	39	240520
01643-31232	K0210-29A0	40	240520
130-43-64260	K0210-29A0	41	240520
01580-11210	K0210-29A0	42	240520
421-40-42211	K0210-29A0A	1	240530
421-40-42210	K0210-29A0A	1	240530
421-40-42220	K0210-29A0A	1	240530
421-40-42350	K0210-29A0A	1	240530
421-40-42310	K0210-29A0A	2	240530
421-40-42320	K0210-29A0A	3	240530
421-40-42330	K0210-29A0A	4	240530
421-40-42340	K0210-29A0A	5	240530
421-40-42360	K0210-29A0A	6	240530
421-40-42370	K0210-29A0A	6	240530
421-40-42380	K0210-29A0A	7	240530
421-40-42390	K0210-29A0A	8	240530
421-40-42410	K0210-29A0A	9	240530
421-40-42420	K0210-29A0A	10	240530
421-40-42430	K0210-29A0A	11	240530
421-40-42440	K0210-29A0A	12	240530
421-40-42450	K0210-29A0A	13	240530
421-40-42460	K0210-29A0A	14	240530
421-40-42470	K0210-29A0A	15	240530
421-40-42480	K0210-29A0A	16	240530
421-40-42230	K0210-29A0A	17	240530
421-40-42510	K0210-29A0A	17	240530
421-40-42520	K0210-29A0A	18	240530
421-40-42240	K0210-29A0A	19	240530
421-40-42530	K0210-29A0A	19	240530
421-40-42540	K0210-29A0A	20	240530
419-40-32110	K0210-29A0A	21	240530
01050-51030	K0210-29A0A	22	240530
01602-21030	K0210-29A0A	23	240530
08191-00770	K0210-29A0A	24	240530
08192-22830	K0210-29A0A	25	240530
418-40-32180	K0210-29A0A	26	240530
418-40-32125	K0210-29A0A	27	240530
01643-31032	K0210-29A0A	28	240530
01596-01009	K0210-29A0A	29	240530
01011-81035	K0210-29A0A	30	240530
01643-30623	K0210-31A7	31	240550
01010-80614	K0210-31A7	33	240550
01643-30623	K0210-31A7	34	240550
418-54-32931	K0210-31A7	35	240550
418-S61-3114	K0210-31A7	36	240550
419-06-31541	K0210-31A7	37	240550
08192-22200	K0210-31A7	38	240550
08191-00770	K0210-31A7	39	240550
418-54-32612	K0210-32A5	1	240560
418-54-32644	K0210-32A5	2	240560
421-54-22520	K0210-32A5	3	240560
418-54-32653	K0210-32A5	4	240560
418-54-32582	K0210-32A5	5	240560
418-54-32593	K0210-32A5	6	240560
418-54-33142	K0210-32A5	7	240560
418-40-32160	K0210-32A5	8	240560
418-54-32713	K0210-32A5	9	240560
418-926-3490	K0210-32A5	10	240560
01225-70616	K0210-32A5	11	240560
418-54-32550	K0210-32A5	12	240560
418-54-32560	K0210-32A5	13	240560
418-926-3490	K0210-32A5	14	240560
01225-70616	K0210-32A5	15	240560
418-926-3490	K0210-32A5	16	240560
01225-70616	K0210-32A5	17	240560
418-54-32870	K0210-32A5	19	240560
421-54-32790	K0210-32A5	20	240560
01225-70616	K0210-32A5	21	240560
418-926-3490	K0210-32A5	22	240560
01225-70616	K0210-32A5	23	240560
418-926-3490	K0210-32A5	24	240560
418-54-32625	K0210-32A6	1	240570
421-09-12780	K0210-32A6	1A	240570
418-54-22190	K0210-32A6	1B	240570
418-54-32870	K0210-32A6	2	240570
421-54-32790	K0210-32A6	3	240570
01225-70616	K0210-32A6	4	240570
418-926-3490	K0210-32A6	5	240570
01225-70616	K0210-32A6	6	240570
418-926-3490	K0210-32A6	7	240570
09415-02512	K0210-33A0	1	240580
418-926-3741	K0210-34A0	1	240590
418-926-3751	K0210-34A0	2	240590
01435-01025	K0210-34A0	3	240590
01435-01030	K0210-34A0	4	240590
01643-31032	K0210-34A0	5	240590
363-54-31450	K0210-34A0	6	240590
426-56-23360	K0210-35A5	1	240600
421-06-23320	K0210-35A5	1	240600
421-06-23330	K0210-35A5	1	240600
08056-00271	K0210-35A5	1	240600
01010-81225	K0210-35A5	2	240600
01643-31232	K0210-35A5	3	240600
01643-31232	K0210-35A5	4	240600
01580-11210	K0210-35A5	5	240600
09620-A2120	K0210-35A5	6	240600
205-00-72430	K0210-35A5	6	240600
418-22-36111	K0210-37A5	1	240610
01252-80825	K0210-37A5	2	240610
01643-50823	K0210-37A5	3	240610
421-S33-3282	K0210-37A5	4	240610
418-22-36122	K0210-37A5	5	240610
416-22-26170	K0210-37A5	6	240610
418-22-36153	K0210-37A5	7	240610
418-22-36152	K0210-37A5	7	240610
418-22-36151	K0210-37A5	7	240610
418-22-36175	K0210-37A5	8	240610
418-22-36174	K0210-37A5	8	240610
418-22-36173	K0210-37A5	8	240610
418-22-36172	K0210-37A5	8	240610
417-43-17430	K0210-37A5	9	240610
417-43-37990	K0210-37A5	10	240610
417-43-17440	K0210-37A5	10	240610
01641-20608	K0210-37A5	11	240610
04050-11612	K0210-37A5	12	240610
421-S33-3282	K0210-37A5	13	240610
418-22-36220	K0210-37A5	13	240610
01023-10320	K0210-37A5	14	240610
01640-20305	K0210-37A5	15	240610
01580-10302	K0210-37A5	16	240610
418-22-46110	K0210-37A5	17	240610
01010-80616	K0210-37A5	18	240610
01643-30623	K0210-37A5	19	240610
01010-80616	K0210-37A5	20	240610
22W-70-16120	K0210-37A5	21	240610
04434-50610	K0210-37A5	22	240610
423-950-2120	K0210-38A5	1	240620
423-950-2130	K0210-38A5	2	240620
01010-80620	K0210-38A5	3	240620
01643-30623	K0210-38A5	4	240620
07049-02734	K0210-38A5	5	240620
20Y-54-14540	K0210-38A5	6	240620
418-54-33320	K0210-38A5	7	240620
418-54-33330	K0210-38A5	8	240620
01010-81230	K0210-38A5	9	240620
01643-31232	K0210-38A5	10	240620
418-54-33390	K0210-38A5	11	240620
421-925-3530	K0210-39A5	1	240630

PARTS Nº	FIG. Nº	INDEX	PAGE
01023-10512	K0210-39A5	2	240630
421-925-3460	K0210-39A5	3	240630
421-925-3690	K0210-39A5	3	240630
421-925-3520	K0210-40A5	1	240640
01220-40420	K0210-40A5	2	240640
09415-01008	K0210-40A5	3	240640
20Y-06-42180	K0210-40A6	1	240650
418-967-2150	K0210-40A6	2	240650
418-967-2230	K0210-40A6	3	240650
01220-40420	K0210-40A6	4	240650
198-Z11-4610	K0210-40A6	5	240650
416-56-31130	K0210-40A6	5	240650
416-926-3493	K0210-40A6	6	240650
416-926-3492	K0210-40A6	6	240650
417-926-3460	K0210-40A6	7	240650
08037-10610	K0210-40A6	8	240650
418-54-32990	K0210-41A5	1	240660
01010-80616	K0210-41A5	2	240660
01643-30623	K0210-41A5	3	240660
569-06-61960	K0210-41A5	4	240660
569-06-61970	K0210-41A5	5	240660
01010-80616	K0210-41A5	6	240660
01643-30623	K0210-41A5	7	240660
287-06-16420	K0210-41A5	8	240660
419-926-B110	K0210-51A5	1	240670
419-926-3504	K0210-51A5	1	240670
418-925-3540	K0210-51A5	1	240670
417-926-3550	K0210-51A5	2	240670
417-926-3520	K0210-51A5	3	240670
417-926-3560	K0210-51A5	4	240670
417-926-3530	K0210-51A5	5	240670
417-926-3570	K0210-51A5	6	240670
418-926-3510	K0210-51A5	8	240670
416-926-3571	K0210-51A5	9	240670
418-926-3530	K0210-51A5	10	240670
421-926-3790	K0210-51A5	11	240670
418-926-3581	K0210-51A5	12	240670
418-926-3591	K0210-51A5	13	240670
418-926-3520	K0210-51A5	14	240670
419-926-3504	K0210-52A5	1	240680
416-926-3481	K0210-52A5	1	240680
416-926-3771	K0210-52A5	2	240680
416-926-3781	K0210-52A5	3	240680
423-56-21910	K0210-52A5	4	240680
416-56-31120	K0210-52A5	5	240680
01023-70620	K0210-52A5	6	240680
11Y-979-4190	K0210-52A5	7	240680
418-926-3470	K0210-52A5	8	240680
01435-40620	K0210-52A5	9	240680
01643-70623	K0210-52A5	10	240680
22W-70-16120	K0210-52A5	11	240680
205-54-51250	K0210-52A5	12	240680
01224-70420	K0210-52A5	13	240680
419-926-B110	K0210-52A5A	1	240690
419-926-3504	K0210-52A5A	1	240690
416-926-3481	K0210-52A5A	1	240690
416-926-3771	K0210-52A5A	2	240690
416-926-3781	K0210-52A5A	3	240690
423-56-21910	K0210-52A5A	4	240690
416-56-31120	K0210-52A5A	5	240690
01023-70620	K0210-52A5A	6	240690
11Y-979-4190	K0210-52A5A	7	240690
418-926-3470	K0210-52A5A	8	240690
01435-40620	K0210-52A5A	9	240690
01643-70623	K0210-52A5A	10	240690
22W-70-16120	K0210-52A5A	10	240690
205-54-51250	K0210-52A5A	11	240690
01224-70412	K0210-52A5A	12	240690
01224-70420	K0210-52A5A	12	240690
419-926-B110	K0210-53A5	1	240700
419-926-3504	K0210-53A5	1	240700
418-926-3932	K0210-53A5	1	240700
02030-70444	K0210-53A5	2	240700
01642-20608	K0210-53A5	3	240700
01643-70623	K0210-53A5	3	240700
418-923-3941	K0210-53A5	4	240700
425-54-15250	K0210-53A5	5	240700
421-926-3612	K0210-53A5	6	240700
01010-80816	K0210-53A5	7	240700
01643-30823	K0210-53A5	8	240700
417-926-3760	K0210-53A5	9	240700
417-926-3650	K0210-53A5	10	240700
418-926-3971	K0210-53A5	11	240700
22T-55-11630	K0210-53A5	12	240700
20U-54-24850	K0210-53A5	13	240700
421-06-26210	K0210-53A5	14	240700
419-923-2130	K0210-53A5	15	240700
424-926-3490	K0210-53A5	16	240700
419-923-2130	K0210-53A5	17	240700
08056-00111	K0210-53A5	18	240700
08056-00130	K0210-53A5	19	240700
418-926-3892	K0210-53A5	20	240700
417-926-3450	K0210-53A5	21	240700
04434-51310	K0210-53A5	22	240700
01010-81016	K0210-53A5	23	240700
01643-31032	K0210-53A5	24	240700
421-54-15440	K0210-53A5	25	240700
20Y-54-35470	K0210-53A5	26	240700
20Y-54-35480	K0210-53A5	27	240700
01240-01025	K0210-53A5	28	240700
419-926-B110	K0210-54A5	1	240710
419-926-3504	K0210-54A5	1	240710
418-925-3450	K0210-54A5	1	240710
418-06-36230	K0210-54A5	2	240710
418-926-3463	K0210-54A5	3	240710
01010-80616	K0210-54A5	4	240710
01643-30623	K0210-54A5	5	240710
421-09-31310	K0210-54A5	6	240710
22W-70-16120	K0210-54A5	7	240710
01224-40620	K0210-54A5	8	240710
418-925-3461	K0210-54A5	9	240710
416-926-3810	K0210-54A5	10	240710
416-926-3820	K0210-54A5	11	240710
416-926-3830	K0210-54A5	12	240710
416-926-3840	K0210-54A5	13	240710
416-926-3850	K0210-54A5	14	240710
416-926-3860	K0210-54A5	15	240710
416-926-3870	K0210-54A5	16	240710
416-926-3880	K0210-54A5	17	240710
09415-01008	K0210-54A5	18	240710
01023-60612	K0210-54A5	19	240710
418-926-3H11	K0210-54A5	20	240710
01010-81020	K0210-54A5	21	240710
01643-31032	K0210-54A5	22	240710
418-925-3350	K0210-54A5	23	240710
418-925-3360	K0210-54A5	24	240710
01010-80612	K0210-54A5	25	240710
01643-30623	K0210-54A5	26	240710
419-926-B110	K0210-55A5	1	240720
419-926-3504	K0210-55A5	1	240720
417-926-3106	K0210-55A5	1	240720
417-926-3105	K0210-55A5	1	240720
14X-911-1330	K0210-55A5	1	240720
417-926-3132	K0210-55A5	1	240720
417-926-3850	K0210-55A5	2	240720
417-926-3990	K0210-55A5	3	240720
421-56-11970	K0210-55A5	4	240720
417-926-3870	K0210-55A5	5	240720
417-926-3880	K0210-55A5	6	240720
417-926-3890	K0210-55A5	7	240720
417-926-3830	K0210-55A5	8	240720
417-926-3840	K0210-55A5	9	240720
417-926-3930	K0210-55A5	10	240720
417-926-3940	K0210-55A5	11	240720
417-926-3950	K0210-55A5	12	240720
417-926-3960	K0210-55A5	13	240720
417-926-3970	K0210-55A5	14	240720
417-926-3990	K0210-55A5	15	240720
421-56-11970	K0210-55A5	16	240720
417-926-3142	K0210-55A5	17	240720
01224-70616	K0210-55A5	18	240720
417-926-3150	K0210-55A5	19	240720
417-926-3160	K0210-55A5	20	240720
423-925-4220	K0210-55A5	21	240720
423-925-4230	K0210-55A5	22	240720
01580-10403	K0210-55A5	23	240720
01023-60430	K0210-55A5	24	240720
417-926-3181	K0210-55A5	25	240720
417-926-3191	K0210-55A5	26	240720
417-926-3410	K0210-55A5	27	240720
417-926-3420	K0210-55A5	28	240720
417-926-3210	K0210-55A5	29	240720
417-926-3221	K0210-55A5	30	240720
417-926-3231	K0210-55A5	31	240720
417-926-3370	K0210-55A5	32	240720
417-926-3250	K0210-55A5	33	240720
417-926-3260	K0210-55A5	34	240720
418-926-3912	K0210-55A5	35	240720
09415-01008	K0210-55A5	36	240720
417-926-3470	K0210-55A5	37	240720
01010-80616	K0210-55A5	38	240720
01010-80620	K0210-55A5	39	240720
01224-70616	K0210-55A5	40	240720
01225-70616	K0210-55A5	41	240720
01640-20610	K0210-55A5	42	240720
01643-30623	K0210-55A5	43	240720
04052-10633	K0210-55A5	44	240720
08037-01008	K0210-55A5	45	240720
14X-911-1540	K0210-55A5	46	240720
205-54-71830	K0210-55A5	47	240720
205-54-72220	K0210-55A5	48	240720
417-926-3380	K0210-55A5	49	240720
418-926-3490	K0210-55A5	50	240720
419-54-16880	K0210-55A5	51	240720
421-09-31310	K0210-55A5	52	240720
421-56-21720	K0210-55A5	53	240720
423-926-3223	K0210-55A5	54	240720
424-926-3261	K0210-55A5	55	240720
424-926-3260	K0210-55A5	55	240720
424-926-3630	K0210-55A5	56	240720
423-926-3860	K0210-55A5	57	240720
417-926-3430	K0210-55A5	58	240720
417-926-3540	K0210-55A5	59	240720
417-923-3950	K0210-55A5	60	240720
22B-54-16340	K0210-55A5	61	240720
01010-81016	K0210-55A5	62	240720
01643-31032	K0210-55A5	63	240720
419-926-B110	K0210-55A5A	1	240730
417-926-3106	K0210-55A5A	1	240730
14X-911-1330	K0210-55A5A	1	240730
417-926-3132	K0210-55A5A	1	240730
417-926-3851	K0210-55A5A	2	240730
417-926-3670	K0210-55A5A	3	240730
417-926-3680	K0210-55A5A	4	240730
417-926-3871	K0210-55A5A	5	240730
417-926-3881	K0210-55A5A	6	240730
417-926-3890	K0210-55A5A	7	240730
417-926-3830	K0210-55A5A	8	240730
417-926-3841	K0210-55A5A	9	240730
417-926-3931	K0210-55A5A	10	240730
417-926-3941	K0210-55A5A	11	240730
417-926-3951	K0210-55A5A	12	240730
417-926-3961	K0210-55A5A	13	240730
417-926-3971	K0210-55A5A	14	240730
417-926-3820	K0210-55A5A	15	240730
417-926-3991	K0210-55A5A	16	240730
417-926-3660	K0210-55A5A	17	240730
417-926-3142	K0210-55A5A	18	240730
01224-70616	K0210-55A5A	19	240730
417-926-3150	K0210-55A5A	20	240730
417-926-3160	K0210-55A5A	21	240730
423-926-4220	K0210-55A5A	22	240730
423-925-4230	K0210-55A5A	23	240730
01580-10403	K0210-55A5A	24	240730
01023-60430	K0210-55A5A	25

PARTS Nº	FIG. Nº	INDEX	PAGE
417-926-3370	K0210-56A5	33	240740
417-926-3250	K0210-56A5	34	240740
418-926-3923	K0210-56A5	35	240740
01010-80616	K0210-56A5	36	240740
01010-80620	K0210-56A5	37	240740
01224-70616	K0210-56A5	38	240740
01225-70616	K0210-56A5	39	240740
01640-20610	K0210-56A5	40	240740
01643-30623	K0210-56A5	41	240740
04052-10633	K0210-56A5	42	240740
08037-01008	K0210-56A5	43	240740
14X-911-1540	K0210-56A5	44	240740
205-54-71830	K0210-56A5	45	240740
205-54-72220	K0210-56A5	46	240740
417-926-3380	K0210-56A5	47	240740
418-926-3490	K0210-56A5	48	240740
419-54-16880	K0210-56A5	49	240740
421-09-31310	K0210-56A5	50	240740
421-56-21720	K0210-56A5	51	240740
423-926-3233	K0210-56A5	52	240740
424-926-3271	K0210-56A5	53	240740
424-926-3270	K0210-56A5	53	240740
424-926-3630	K0210-56A5	54	240740
423-926-3860	K0210-56A5	55	240740
417-926-3430	K0210-56A5	56	240740
417-926-3540	K0210-56A5	57	240740
417-923-3950	K0210-56A5	58	240740
01010-81016	K0210-56A5	59	240740
01643-31032	K0210-56A5	60	240740
419-926-B110	K0210-56A5A	1	240750
418-923-3404	K0210-56A5A	1	240750
14X-911-1330	K0210-56A5A	1	240750
417-926-3272	K0210-56A5A	1	240750
417-926-3861	K0210-56A5A	2	240750
417-926-3670	K0210-56A5A	3	240750
417-926-3680	K0210-56A5A	4	240750
417-926-3871	K0210-56A5A	5	240750
417-926-3881	K0210-56A5A	6	240750
417-926-3890	K0210-56A5A	7	240750
417-926-3830	K0210-56A5A	8	240750
417-926-3841	K0210-56A5A	9	240750
417-926-3931	K0210-56A5A	10	240750
417-926-3941	K0210-56A5A	11	240750
417-926-3951	K0210-56A5A	12	240750
417-926-3961	K0210-56A5A	13	240750
417-926-3971	K0210-56A5A	14	240750
417-926-3820	K0210-56A5A	15	240750
417-926-3991	K0210-56A5A	16	240750
417-926-3660	K0210-56A5A	17	240750
417-926-3282	K0210-56A5A	18	240750
417-926-3281	K0210-56A5A	18	240750
01224-70616	K0210-56A5A	19	240750
417-926-3290	K0210-56A5A	20	240750
417-926-3181	K0210-56A5A	21	240750
417-926-3321	K0210-56A5A	22	240750
417-926-3410	K0210-56A5A	23	240750
417-926-3420	K0210-56A5A	24	240750
417-926-3330	K0210-56A5A	25	240750
417-926-3341	K0210-56A5A	26	240750
417-926-3350	K0210-56A5A	27	240750
417-926-3150	K0210-56A5A	28	240750
423-925-4220	K0210-56A5A	29	240750
423-925-4230	K0210-56A5A	30	240750
01580-10403	K0210-56A5A	31	240750
01023-60430	K0210-56A5A	32	240750
417-926-3221	K0210-56A5A	33	240750
417-926-3370	K0210-56A5A	34	240750
417-926-3250	K0210-56A5A	35	240750
418-926-3923	K0210-56A5A	36	240750
01010-80616	K0210-56A5A	37	240750
01010-80620	K0210-56A5A	38	240750
01224-70616	K0210-56A5A	39	240750
01225-70616	K0210-56A5A	40	240750
01640-20610	K0210-56A5A	41	240750
01643-30623	K0210-56A5A	42	240750
04052-10623	K0210-56A5A	43	240750
08037-01008	K0210-56A5A	44	240750
14X-911-1540	K0210-56A5A	45	240750
205-54-71830	K0210-56A5A	46	240750
205-54-72220	K0210-56A5A	47	240750
417-926-3380	K0210-56A5A	48	240750
418-926-3490	K0210-56A5A	49	240750
419-54-16880	K0210-56A5A	50	240750
421-09-31310	K0210-56A5A	51	240750
421-56-21720	K0210-56A5A	52	240750
423-926-3233	K0210-56A5A	53	240750
424-926-3271	K0210-56A5A	54	240750
424-926-3630	K0210-56A5A	55	240750
423-926-3860	K0210-56A5A	56	240750
417-926-3430	K0210-56A5A	57	240750
417-926-3540	K0210-56A5A	58	240750
417-923-3950	K0210-56A5A	59	240750
01010-81016	K0210-56A5A	60	240750
01643-31032	K0210-56A5A	61	240750
419-926-B110	K0210-57A5	1	240760
419-926-3504	K0210-57A5	1	240760
20T-54-75290	K0210-57A5	1	240760
01580-11008	K0210-57A5	2	240760
20Y-54-35961	K0210-57A5	3	240760
01580-11008	K0210-57A5	4	240760
418-926-3760	K0210-57A5	5	240760
20Y-54-35710	K0210-57A5	6	240760
07005-01412	K0210-57A5	7	240760
01435-01025	K0210-57A5	8	240760
01643-31032	K0210-57A5	9	240760
363-54-31450	K0210-57A5	10	240760
426-56-21990	K0210-57A5	11	240760
421-09-21210	K0210-57A5	12	240760
419-926-B110	K0210-58A5	1	240770
419-926-3504	K0210-58A5	1	240770
418-93-31410	K0210-58A5	1	240770
418-921-3510	K0210-59A5	1	240780
424-926-3240	K0210-59A5	2	240780
424-926-3230	K0210-59A5	3	240780
01225-70620	K0210-59A5	4	240780
23S-55-51970	K0210-59A5	5	240780
01010-80616	K0210-59A5	6	240780
01643-30623	K0210-59A5	7	240780
417-926-3720	K0210-59A5	8	240780
424-926-3240	K0210-59A5	9	240780
424-926-3230	K0210-59A5	10	240780
22T-56-13210	K0210-59A5	11	240780
01225-70620	K0210-59A5	12	240780
23S-55-51970	K0210-59A5	13	240780
01010-80616	K0210-59A5	14	240780
01643-30623	K0210-59A5	15	240780
20Y-06-23472	K0210-59A5	16	240780
424-926-3280	K0210-59A5	17	240780
421-09-21460	K0210-59A5	18	240780
20Y-06-21751	K0210-59A5	19	240780
418-926-3711	K0210-59B5	1	240790
424-926-3240	K0210-59B5	2	240790
424-926-3230	K0210-59B5	3	240790
01225-70620	K0210-59B5	4	240790
23S-55-51970	K0210-59B5	5	240790
01010-80616	K0210-59B5	6	240790
01643-30623	K0210-59B5	7	240790
418-926-3722	K0210-59B5	8	240790
424-926-3240	K0210-59B5	9	240790
424-926-3230	K0210-59B5	10	240790
22T-56-13210	K0210-59B5	11	240790
01225-70620	K0210-59B5	12	240790
23S-55-51970	K0210-59B5	13	240790
01010-80616	K0210-59B5	14	240790
01643-30623	K0210-59B5	15	240790
20Y-06-23472	K0210-59B5	16	240790
424-926-3280	K0210-59B5	17	240790
421-09-21460	K0210-59B5	18	240790
20Y-06-21751	K0210-59B5	19	240790
418-54-32412	K0310-01A0	1	240800
423-947-1101	K0350-01A0	1	240810
423-947-1110	K0350-01A0	1	240810
423-947-1121	K0350-01A0	2	240810
423-947-2150	K0350-01A0	3	240810
419-07-36120	K0350-01A0	4	240810
04435-50810	K0350-01A0	5	240810
01010-81020	K0350-01A0	6	240810
01643-31032	K0350-01A0	7	240810
08034-20519	K0350-01A0	8	240810
418-S62-3121	K0710-01A0	1	240820
418-S62-3150	K0710-01A0	1	240820
ND022740-3990	K0710-01A0	1	240820
ND263500-0763	K0710-01A0	1	240820
418-S62-3161	K0710-01A0	2	240820
418-S62-3160	K0710-01A0	2	240820
20Y-979-3120	K0710-01A0	3	240820
418-S62-3175	K0711-01A0	1	240830
418-S62-3173	K0711-01A0	1	240830
418-S62-3183	K0711-01A0	2	240830
11Y-01-11280	K0711-01A0	3	240830
01010-81080	K0711-01A0	4	240830
01010-81065	K0711-01A0	4	240830
01643-31032	K0711-01A0	5	240830
01643-31032	K0711-01A0	6	240830
01643-31032	K0711-01A0	6	240830
418-S62-3340	K0711-01A0	7	240830
01010-81240	K0711-01A0	8	240830
01010-81235	K0711-01A0	8	240830
01643-31232	K0711-01A0	9	240830
01010-810270	K0711-01A0	10	240830
01010-81265	K0711-01A0	10	240830
01643-31232	K0711-01A0	11	240830
01016-51090	K0711-01A0	12	240830
01580-11008	K0711-01A0	13	240830
6202-81-6810	K0711-01A0	14	240830
418-S62-3310	K0711-01A0	15	240830
418-S62-3291	K0711-01A0	16	240830
01010-81020	K0711-01A0	17	240830
01643-31032	K0711-01A0	18	240830
04120-21744	K0711-01A0	19	240830
419-S62-3231	K0711-01A0	20	240830
20Y-979-3140	K0711-01A0	20	240830
01010-80630	K0711-01A0	21	240830
01643-30623	K0711-01A0	22	240830
418-S62-3251	K0711-01A0	23	240830
01010-80625	K0711-01A0	24	240830
01643-30623	K0711-01A0	25	240830
419-S62-3244	K0711-01A0	26	240830
20Y-979-3150	K0711-01A0	26	240830
17A-911-1671	K0711-01A0	27	240830
20Y-979-3150	K0711-01A0	27	240830
01010-80625	K0711-01A0	28	240830
01643-30623	K0711-01A0	29	240830
419-S62-3223	K0711-01A0	30	240830
20Y-979-3130	K0711-01A0	30	240830
01010-80630	K0711-01A0	31	240830
01643-30623	K0711-01A0	32	240830
418-07-32113	K0711-02A0	1	240840
01010-81220	K0711-02A0	2	240840
01643-31232	K0711-02A0	3	240840
04434-51912	K0711-02A0	4	240840
04434-52112	K0711-02A0	5	240840
417-07-22380	K0711-02A0	6	240840
04434-51612	K0711-02A0	7	240840
04434-52112	K0711-02A0	8	240840
01010-81020	K0711-02A0	9	240840
01643-31032	K0711-02A0	10	240840
07095-20314	K0711-02A0	11	240840
01010-81020	K0711-02A0	12	240840
01643-31032	K0711-02A0	13	240840
04434-52712	K0711-02A0	14	240840
07095-20420	K0711-02A0	15	240840
04434-52512	K0711-02A0	16	240840
07095-20318	K0711-02A0	17	240840
01010-81025	K0711-02A0	18	240840
01643-31032	K0711-02A0	19	240840
04434-52112	K0711-02A0	20	240840
01010-81225	K0711-03A0	1	240850
01643-31232	K0711-03A0	2	240850
418-S62-3322	K0711-03A0	3	240850
07283-26155	K0711-03A0	4	240850
01597-01009	K0711-03A0	5	240850
01643-31032	K0711-03A0	6	240850
01010-81225	K0711-03A0	7	240850
01643-31232	K0711-03A0	8	240850
01010-81225	K0711-04A0	1	240860
01643-31232	K0711-04A0	2	240860
418-S62-B110	K0711-04A0	3	240860
07283-26155	K0711-04A0	4	240860
01597-01009	K0711-04A0	5	240860
01643-31032	K0711-04A0	6	240860
01010-81225	K0711-04A0	7	240860
01643-31232	K0711-04A0	8	240860
418-S62-B120	K0711-04A0	9	240860
418-S62-B130	K0711-04A0	10	240860
01010-80820	K0711-04A0	11	240860
01643-30823	K0711-04A0	12	240860
01010-80816	K0711-04A0	13	240860
01643-30823	K0711-04A0	14	240860
01580-00806	K0711-04A0	15	240860
124-Z11-1530	K0713-01A0	1	240870
567-07-15222	K0713-01A0	2	240870
567-07-15221	K0713-01A0	2	240870
09483-10511	K0713-01A0	3	240870
09479-02400	K0713-01A0	4	240870
418-07-25130	K0713-01A0	5	240870
416-942-1560	K0713-01A0	6	240870
09483-10516	K0713-01A0	7	240870
09479-02400	K0713-01A0	8	240870
04434-52312	K0713-01A0	9	240870
418-07-31160	K0713-01A0	10	240870
01010-81020	K0713-01A0	11	240870
01643-31032	K0713-01A0	12	240870
09479-02400	K0713-01A0	13	240870
421-07-11550	K0713-01A0	14	240870
01010-81020	K0713-01A0	15	240870
01643-31032	K0713-01A0	16	240870
01010-81020	K0713-01A0	17	240870
01643-31032	K0713-01A0	18	240870
421-925-3510	K0810-01A1	1	240880
01023-60412	K0810-01A1	2	240880
01580-10403	K0810-01A1	3	240880
01640-20408	K0810-01A1	4	240880
418-925-3471	K0810-01A1	5	240880
418-925-3481	K0810-01A1	6	240880
01023-10510	K0810-01A1	7	240880
425-S67-2162	K0810-01A3	1	240890
425-S67-2180	K0810-01A3	1	240890
08040-00300	K0810-01A3	1	240890
08040-00100	K0810-01A3	1	240890
421-925-3140	K0810-01A3	2	240890
01023-60412	K0810-01A3	3	240890
01601-20410	K0810-01A3	4	240890
418-925-3471	K0810-01A3	5	240890
418-925-3481	K0810-01A3	6	240890
01023-10510	K0810-01A3	7	240890
418-54-33111	K4100-01A0	1	240900
418-54-33110	K4100-01A0	1	240900
01643-32460	K4100-01A0	2	240900
01596-02419	K4100-01A0	3	240900
01010-81845	K4100-01A0	4	240900
01643-31845	K4100-01A0	5	240900
561-40-41210	K4100-01A0	6	240900
419-06-B3131	K4200-01A0	1	240910
04434-51008	K4200-01A0	2	240910
01435-01016	K4200-01A0	3	240910
08034-20519	K4200-01A0	4	240910
01010-80616	K4200-01A0	5	240910
01643-30623	K4200-01A0	6	240910
287-06-16420	K4200-01A0	7	240910

PARTS Nº	FIG. Nº	INDEX	PAGE
419-09-11380	K4200-01A0	8	240910
419-06-B3120	K4200-01A0	9	240910
417-06-B1280	K4200-01A0	10	240910
417-06-B1130	K4200-01A0	11	240910
419-06-B5110	K4200-01A0	12	240910
418-06-B1010	K4200-01A1	1	240920
421-93-B1010	K4200-01A1	2	240920
418-06-B1060	K4200-01A1	3	240920
417-06-A1360	K4200-01A1	3	240920
08041-00500	K4200-01A1	3	240920
418-06-B1020	K4200-01A1	4	240920
418-06-B1030	K4200-01A1	5	240920
418-06-B1040	K4200-01A1	6	240920
01641-20305	K4200-01A1	7	240920
01580-10302	K4200-01A1	8	240920
01010-80616	K4200-01A1	9	240920
14X-43-31350	K4200-01A1	10	240920
01010-80640	K4200-01A1	10	240920
01643-30623	K4200-01A1	11	240920
418-06-B1051	K4200-01A1	12	240920
418-06-B1050	K4200-01A1	12	240920
04434-51608	K4200-01A1	13	240920
04434-51008	K4200-01A1	14	240920
04434-51010	K4200-01A1	15	240920
04434-51012	K4200-01A1	16	240920
01643-31032	K4200-01A1	17	240920
01571-01016	K4200-01A1	18	240920
01010-81025	K4200-01A1	19	240920
01010-81050	K4200-01A1	20	240920
08034-20519	K4200-01A1	21	240920
08059-00310	K4200-01A1	22	240920
7861-92-3320	K4220-01A0	1	240930
418-43-31113	K4410-01A0	1	240940
01010-80855	K4410-01A0	2	240940
01643-30823	K4410-01A0	3	240940
424-43-11240	K4410-01A0	4	240940
01584-00605	K4410-01A0	5	240940
421-43-11261	K4410-01A0	6	240940
01596-00606	K4410-01A0	7	240940
01643-30623	K4410-01A0	8	240940
04256-40615	K4410-01A0	9	240940
421-43-11330	K4410-01A0	10	240940
417-18-31111	K4450-01A0	1	240950
01010-80870	K4450-01A0	2	240950
01643-30823	K4450-01A0	3	240950
02782-10210	K4450-01A0	4	240950
07002-11423	K4450-01A0	5	240950
02896-11008	K4450-01A0	6	240950
419-18-31342	K4450-01A0	7	240950
08210-00602	K4450-01A0	8	240950
419-18-31361	K4450-01A0	9	240950
419-18-31391	K4450-01A0	10	240950
21W-62-43980	K4450-01A0	11	240950
418-18-31111	K4450-01A0	12	240950
21W-62-43970	K4450-01A0	13	240950
07000-12011	K4450-01A0	14	240950
04434-51210	K4450-01A0	15	240950
01010-81020	K4450-01A0	16	240950
01643-31032	K4450-01A0	17	240950
07040-11007	K4450-01A0	17A	240950
07002-11023	K4450-01A0	17B	240950
07000-12018	K4450-01A0	18	240950
419-18-31510	K4450-01A0	19	240950
02896-11009	K4450-01A0	20	240950
20U-62-41890	K4450-01A0	21	240950
07002-11423	K4450-01A0	22	240950
02896-11008	K4450-01A0	23	240950
419-18-31312	K4450-01A0	24	240950
419-18-31322	K4450-01A0	25	240950
04434-51610	K4450-01A0	26	240950
04434-51510	K4450-01A0	27	240950
01010-81020	K4450-01A0	28	240950
01643-31032	K4450-01A0	29	240950
02761-003A3	K4450-01A0	30	240950
11Y-62-12510	K4450-01A0	31	240950
07002-11423	K4450-01A0	32	240950
02896-11009	K4450-01A0	33	240950
419-43-37203	K4460-01A1	1	240960
07040-11007	K4460-01A1	2	240960
07002-11023	K4460-01A1	3	240960
21W-62-43980	K4460-01A1	4	240960
21W-62-43990	K4460-01A1	5	240960
07000-12011	K4460-01A1	6	240960
02896-11008	K4460-01A1	7	240960
418-62-35111	K4460-01A1	8	240960
07000-12018	K4460-01A1	9	240960
02896-11012	K4460-01A1	10	240960
419-43-37160	K4460-01A1	11	240960
07000-12014	K4460-01A1	12	240960
02896-11009	K4460-01A1	13	240960
419-43-37651	K4460-01A1	14	240960
02765-B02A5	K4460-01A1	15	240960
419-43-37225	K4460-01A1	16	240960
01010-81230	K4460-01A1	17	240960
01010-81225	K4460-01A1	18	240960
01643-31232	K4460-01A1	19	240960
418-43-37401	K4460-02A1	1	240970
417-43-37140	K4460-02A1	2	240970
01582-11008	K4460-02A1	3	240970
01582-11008	K4460-02A1	4	240970
01643-31032	K4460-02A1	5	240970
417-43-37410	K4460-02A1	6	240970
07000-12011	K4460-02A1	7	240970
02896-11008	K4460-02A1	8	240970
02765-B02A5	K4460-02A1	9	240970
419-43-37111	K4460-02A1	10	240970
419-43-37230	K4460-02A1	11	240970
07000-13025	K4460-02A1	12	240970
07371-30638	K4460-02A1	13	240970
01643-50823	K4460-02A1	14	240970
01010-80840	K4460-02A1	15	240970
07373-30600	K4460-02A1	16	240970
07000-13025	K4460-02A1	17	240970
421-43-22912	K4460-02A1	18	240970
07002-11423	K4460-02A1	19	240970
419-43-37141	K4460-02A1	20	240970
201-03-29160	K4460-02A1	21	240970
04434-51610	K4460-02A1	22	240970
01010-81025	K4460-02A1	23	240970
01010-81035	K4460-02A1	24	240970
01643-31032	K4460-02A1	25	240970
419-43-37150	K4460-02A1	26	240970
02896-11015	K4460-02A1	27	240970
07000-12018	K4460-02A1	28	240970
02896-11012	K4460-02A1	29	240970
419-43-37291	K4460-02A1	30	240970
799-101-5220	K4460-02A1	31	240970
07002-11023	K4460-02A1	32	240970
07002-12434	K4460-02A1	33	240970
421-43-22571	K4460-02A1	34	240970
421-43-22562	K4460-02A1	35	240970
421-43-27920	K4460-02A1	36	240970
01010-81025	K4460-02A1	37	240970
01643-31032	K4460-02A1	38	240970
07002-15234	K4460-02A1	39	240970
07002-12434	K4460-02A1	40	240970
11Y-62-12630	K4460-02A1	41	240970
02766-004A3	K4460-02A1	42	240970
02896-11012	K4460-02A1	43	240970
418-43-37860	K4460-03A0	1	240980
02896-11009	K4460-03A0	2	240980
01010-81025	K4460-03A0	3	240980
01643-31032	K4460-03A0	4	240980
01010-81020	K4460-03A0	5	240980
01643-31032	K4460-03A0	6	240980
04434-51310	K4460-03A0	7	240980
419-43-37512	K4460-03A0	8	240980
416-43-37420	K4460-03A0	9	240980
419-43-37870	K4460-03A0	10	240980
02896-11009	K4460-03A0	11	240980

PARTS Nº	FIG. Nº	INDEX	PAGE
01010-81020	K4460-03A0	12	240980
01643-31032	K4460-03A0	13	240980
04434-51510	K4460-03A0	14	240980
04434-51010	K4460-03A0	14	240980
419-43-371172	K4460-03A0	15	240980
419-43-37531	K4460-03A0	16	240980
08210-00604	K4460-03A0	17	240980
419-43-37203	K4460-51A1	1	240990
417-43-37530	K4460-51A1	3	240990
417-43-37540	K4460-51A1	4	240990
417-43-37550	K4460-51A1	5	240990
417-43-37560	K4460-51A1	6	240990
417-43-37570	K4460-51A1	7	240990
417-43-37580	K4460-51A1	8	240990
419-43-37591	K4460-51A1	9	240990
417-43-37610	K4460-51A1	10	240990
417-43-37620	K4460-51A1	11	240990
419-43-37760	K4460-51A1	12	240990
417-43-37640	K4460-51A1	13	240990
417-43-37650	K4460-51A1	14	240990
417-43-37660	K4460-51A1	15	240990
417-43-37670	K4460-51A1	16	240990
417-43-37680	K4460-51A1	17	240990
417-43-37690	K4460-51A1	18	240990
417-43-37710	K4460-51A1	19	240990
417-43-37720	K4460-51A1	20	240990
417-43-37730	K4460-51A1	21	240990
417-43-37740	K4460-51A1	22	240990
417-43-37750	K4460-51A1	23	240990
417-43-37760	K4460-51A1	24	240990
417-43-37780	K4460-51A1	26	240990
417-43-37790	K4460-51A1	27	240990
419-43-37780	K4460-51A1	28	240990
419-43-37791	K4460-51A1	29	240990
419-43-37770	K4460-51A1	30	240990
419-43-37410	K4470-01A0	1	241000
419-43-37420	K4470-01A0	2	241000
02782-10311	K4470-01A0	3	241000
07002-11423	K4470-01A0	4	241000
02896-11009	K4470-01A0	5	241000
419-43-37561	K4470-01A0	6	241000
419-43-37522	K4470-01A0	7	241000
419-43-37542	K4470-01A0	8	241000
02781-0031D	K4470-01A0	9	241000
07002-11423	K4470-01A0	10	241000
02896-11009	K4470-01A0	11	241000
419-43-37551	K4470-01A0	12	241000
419-43-29110	K4504-01A0	1	241010
01010-81230	K4504-01A0	2	241010
130-43-64260	K4504-01A0	3	241010
421-43-29120	K4504-01A0	4	241010
01010-81225	K4504-01A0	5	241010
01643-31232	K4504-01A0	6	241010
08193-20010	K4504-01A0	7	241010
01010-81016	K4504-01A0	8	241010
01643-31032	K4504-01A0	9	241010
56B-06-15610	K4504-01A0	10	241010
419-44-31110	K4504-01A0	11	241010
01580-11210	K4504-01A0	12	241010
01010-81235	K4504-01A0	13	241010
01643-31232	K4504-01A0	14	241010
01643-31232	K4504-01A0	15	241010
419-54-B4122	M4100-01A0	1	270010
419-54-B4121	M4100-01A0	1	270010
419-54-B4120	M4100-01A0	1	270010
419-54-31454	M4100-01A0	1	270010
418-54-32480	M4100-01A0	2	270010
418-54-32490	M4100-01A0	3	270010
419-54-31360	M4100-01A0	4	270010
418-54-33260	M4100-01A0	5	270010
419-54-31820	M4100-01A0	6	270010
01010-80816	M4100-01A0	7	270010
01643-30823	M4100-01A0	8	270010
418-54-31990	M4100-01A0	9	270010
418-54-33250	M4100-01A0	10	270010
418-54-31481	M4100-01A0	11	270010
01010-81220	M4100-01A0	12	270010
01643-31232	M4100-01A0	13	270010
07049-01012	M4100-01A0	14	270010
419-54-B5500	M4100-01A1	1	270020
418-54-32480	M4100-01A1	2	270020
418-54-B2530	M4100-01A1	3	270020
419-54-B5360	M4100-01A1	4	270020
418-54-33260	M4100-01A1	5	270020
419-54-31820	M4100-01A1	6	270020
01010-80816	M4100-01A1	7	270020
418-54-31480	M4100-01A1	8	270020
419-54-31990	M4100-01A1	9	270020
418-54-33240	M4100-01A1	10	270020
418-54-31481	M4100-01A1	11	270020
01010-81220	M4100-01A1	12	270020
01643-31232	M4100-01A1	13	270020
07049-01012	M4100-01A1	14	270020
6090-01-9720	M4100-01A1	15	270020
419-54-B5460	M4100-01A1	16	270020
419-54-31186	M4100-02A0	1	270030
417-54-21431	M4100-02A0	2	270030
01010-80820	M4100-02A0	3	270030
01643-30823	M4100-02A0	4	270030
415-54-11980	M4100-02A0	5	270030
419-54-31792	M4100-02A0	6	270030
01010-80816	M4100-02A0	7	270030
01643-30823	M4100-02A0	8	270030
419-54-31830	M4100-02A0	9	270030
419-54-31170	M4100-02A0	10	270030
01010-81020	M4100-02A0	11	270030
01643-31032	M4100-02A0	12	270030
418-54-31832	M4100-02A0	13	270030
01643-30623	M4100-02A0	14	270030
04050-11612	M4100-02A0	15	270030
421-09-12322	M4100-02A0	16	270030
418-54-33130	M4100-02A0	17	270030
01023-10420	M4100-02A0	18	270030
01023-10414	M4100-02A0	19	270030
01580-60403	M4100-02A0	20	270030
419-54-31186	M4100-02A1	1	270040
417-54-21431	M4100-02A1	2	270040
01010-80820	M4100-02A1	3	270040
01643-30823	M4100-02A1	4	270040
415-54-11980	M4100-02A1	5	270040
419-54-B5520	M4100-02A1	6	270040
419-54-B4160	M4100-02A1	6	270040
01010-80816	M4100-02A1	7	270040
01643-30823	M4100-02A1	8	270040
419-54-31830	M4100-02A1	9	270040
419-54-31170	M4100-02A1	10	270040
01010-81020	M4100-02A1	11	270040
01643-31032	M4100-02A1	12	270040
418-54-31832	M4100-02A1	13	270040
01643-30623	M4100-02A1	14	270040
04050-11612	M4100-02A1	15	270040
421-09-12322	M4100-02A1	16	270040
418-54-33130	M4100-02A1	17	270040
01023-10420	M4100-02A1	18	270040
01023-10414	M4100-02A1	19	270040
01580-60403	M4100-02A1	20	270040
419-54-B4131	M4100-03A0	1	270050
419-54-B4130	M4100-03A0	1	270050
419-54-31120	M4100-03A0	1	270050
421-54-31740	M4100-03A0	2	270050
418-54-31493	M4100-03A0	3	270050
418-54-B2520	M4100-03A0	3A	270050
01010-81020	M4100-03A0	4	270050
01643-31023	M4100-03A0	5	270050
418-54-31181	M4100-03A0	6	270050
418-54-31192	M4100-03A0	7	270050
01010-81025	M4100-03A0	8	270050
01643-31032	M4100-03A0	9	270050
418-54-34270	M4100-03A0	10	270050
01640-20508	M4100-03A0	11	270050

PARTS Nº	FIG. Nº	INDEX	PAGE
04050-11610	M4100-03A0	12	270050
419-54-B4141	M4100-03A0	13	270050
419-54-B4140	M4100-03A0	13	270050
419-54-31130	M4100-03A0	13	270050
421-54-31740	M4100-03A0	14	270050
418-54-31353	M4100-03A0	15	270050
418-54-B2510	M4100-03A0	15A	270050
01010-81020	M4100-03A0	16	270050
01643-31032	M4100-03A0	17	270050
418-54-31181	M4100-03A0	18	270050
418-54-31192	M4100-03A0	19	270050
01010-81025	M4100-03A0	20	270050
01643-31032	M4100-03A0	21	270050
418-54-34270	M4100-03A0	22	270050
01640-20508	M4100-03A0	23	270050
04050-11610	M4100-03A0	24	270050
418-54-34730	M4100-03A0	25	270050
418-54-34740	M4100-03A0	26	270050
418-54-31960	M4100-03A0	27	270050
418-54-31671	M4100-03A0	28	270050
418-54-31681	M4100-03A0	29	270050
01010-81225	M4100-03A0	30	270050
01643-31232	M4100-03A0	31	270050
01010-81020	M4100-03A0	32	270050
01643-31032	M4100-03A0	33	270050
01640-20816	M4100-03A0	34	270050
04050-12015	M4100-03A0	35	270050
419-54-31810	M4100-03A0	36	270050
419-54-B5440	M4100-03A1	1	270060
419-54-B4131	M4100-03A1	1	270060
419-54-B4150	M4100-03A1	2	270060
421-54-11381	M4100-03A1	2	270060
418-54-31493	M4100-03A1	3	270060
418-54-B2520	M4100-03A1	3A	270060
01010-81020	M4100-03A1	4	270060
01643-31023	M4100-03A1	5	270060
418-54-31181	M4100-03A1	6	270060
418-54-31192	M4100-03A1	7	270060
01010-81025	M4100-03A1	8	270060
01643-31032	M4100-03A1	9	270060
418-54-34270	M4100-03A1	10	270060
01640-20508	M4100-03A1	11	270060
04050-11610	M4100-03A1	12	270060
419-54-B5430	M4100-03A1	13	270060
419-54-B4141	M4100-03A1	13	270060
419-54-B4150	M4100-03A1	14	270060
421-54-11381	M4100-03A1	14	270060
418-54-31353	M4100-03A1	15	270060
418-54-B2510	M4100-03A1	15A	270060
01010-81020	M4100-03A1	16	270060

PARTS Nº	FIG. Nº	INDEX	PAGE
01643-31032	M4100-03A1	17	270060
418-54-31181	M4100-03A1	18	270060
418-54-31192	M4100-03A1	19	270060
01010-81025	M4100-03A1	20	270060
01643-31032	M4100-03A1	21	270060
418-54-34270	M4100-03A1	22	270060
01640-20508	M4100-03A1	23	270060
04050-11610	M4100-03A1	24	270060
418-54-34730	M4100-03A1	25	270060
418-54-34740	M4100-03A1	26	270060
418-54-31960	M4100-03A1	27	270060
418-54-31671	M4100-03A1	28	270060
418-54-31681	M4100-03A1	29	270060
418-54-31225	M4100-03A1	30	270060
01643-31232	M4100-03A1	31	270060
418-54-31155	M4100-03A1	32	270060
01010-80820	M4100-03A1	33	270060
01643-30823	M4100-03A1	34	270060
418-54-31164	M4100-03A1	35	270060
01010-D0820	M4100-03A1	36	270060
01643-70823	M4100-03A1	37	270060
418-54-31142	M4100-04A2	1	270070
419-54-31780	M4100-04A2	2	270070
418-54-31155	M4100-04A2	3	270070
01010-80820	M4100-04A2	4	270070
01643-30823	M4100-04A2	5	270070
418-54-31164	M4100-04A2	6	270070
01010-D0820	M4100-04A2	7	270070
01643-70823	M4100-04A2	8	270070
01010-D0820	M4100-04A2	9	270070
418-54-35450	M4100-04A2	10	270070
418-54-31970	M4100-04A2	11	270070
418-54-31172	M4100-04A2	12	270070
01010-81020	M4100-04A2	13	270070
01643-31032	M4100-04A2	14	270070
417-54-21562	M4100-04A2	15	270070
01010-80816	M4100-04A2	16	270070
01643-30823	M4100-04A2	17	270070
419-54-31140	M4100-04A2	18	270070
01640-20816	M4100-04A2	19	270070
04050-12015	M4100-04A2	20	270070
419-06-32121	M4100-04A2	21	270070
04434-51012	M4100-04A2	22	270070
01010-81020	M4100-04A2	23	270070
01643-31032	M4100-04A2	24	270070
418-06-32312	M4100-04A2	25	270070
04434-51010	M4100-04A2	26	270070
04434-50810	M4100-04A2	27	270070
417-06-32610	M4100-04A2	28	270070
01010-80816	M4100-04A2	29	270070
01643-30823	M4100-04A2	30	270070

PARTS Nº	FIG. Nº	INDEX	PAGE
04434-51412	M4100-04A2	31	270070
01010-81020	M4100-04A2	32	270070
01643-31032	M4100-04A2	33	270070
421-06-23350	M4100-04A2	34	270070
421-06-23320	M4100-04A2	34	270070
421-06-23330	M4100-04A2	34	270070
419-06-31510	M4100-04A2	35	270070
08164-B0000	M4100-04A2	35	270070
01435-00895	M4100-04A2	36	270070
418-54-31980	M4100-04A2	37	270070
01010-80816	M4100-04A2	38	270070
01643-30823	M4100-04A2	39	270070
418-54-31142	M4100-04A3	1	270080
419-54-31780	M4100-04A3	2	270080
418-54-31155	M4100-04A3	3	270080
01010-81020	M4100-04A3	4	270080
01643-31032	M4100-04A3	5	270080
418-54-31164	M4100-04A3	6	270080
01010-D0820	M4100-04A3	7	270080
01643-70823	M4100-04A3	8	270080
01010-D0820	M4100-04A3	9	270080
418-54-35450	M4100-04A3	10	270080
418-54-31970	M4100-04A3	11	270080
418-54-31172	M4100-04A3	12	270080
01010-81020	M4100-04A3	13	270080
01643-31032	M4100-04A3	14	270080
417-54-21562	M4100-04A3	15	270080
01010-80816	M4100-04A3	16	270080
01643-30823	M4100-04A3	17	270080
419-54-31140	M4100-04A3	18	270080
01640-20816	M4100-04A3	19	270080
04050-12015	M4100-04A3	20	270080
419-06-32121	M4100-04A3	21	270080
04434-51012	M4100-04A3	22	270080
01010-81020	M4100-04A3	23	270080
01643-31032	M4100-04A3	24	270080
418-06-32312	M4100-04A3	25	270080
04434-51010	M4100-04A3	26	270080
04434-50810	M4100-04A3	27	270080
417-06-32610	M4100-04A3	28	270080
01010-80816	M4100-04A3	29	270080
01643-30823	M4100-04A3	30	270080
01435-00895	M4100-04A3	36	270080

PARTS Nº	FIG. Nº	INDEX	PAGE
418-54-31980	M4100-04A3	37	270080
01010-80816	M4100-04A3	38	270080
01643-30823	M4100-04A3	39	270080
419-54-B5510	M4100-04A3A	1	270090
418-54-31172	M4100-04A3A	2	270090
01010-81020	M4100-04A3A	3	270090
01643-31032	M4100-04A3A	4	270090
417-54-21562	M4100-04A3A	5	270090
01010-80816	M4100-04A3A	6	270090
01643-30823	M4100-04A3A	7	270090
419-54-31140	M4100-04A3A	8	270090
01640-20816	M4100-04A3A	9	270090
04050-12015	M4100-04A3A	10	270090
419-06-32121	M4100-04A3A	11	270090
04434-51012	M4100-04A3A	12	270090
01010-81020	M4100-04A3A	13	270090
01643-31032	M4100-04A3A	14	270090
418-06-32312	M4100-04A3A	15	270090
04434-51010	M4100-04A3A	16	270090
04434-50810	M4100-04A3A	17	270090
417-06-32610	M4100-04A3A	18	270090
01010-80816	M4100-04A3A	19	270090
01643-30823	M4100-04A3A	20	270090
04434-51412	M4100-04A3A	21	270090
01010-81020	M4100-04A3A	22	270090
01643-31032	M4100-04A3A	23	270090
421-06-23350	M4100-04A3A	24	270090
421-06-23320	M4100-04A3A	24	270090
421-06-23330	M4100-04A3A	24	270090
419-06-31510	M4100-04A3A	25	270090
01435-00895	M4100-04A3A	26	270090
418-54-31980	M4100-04A3A	27	270090
01010-80816	M4100-04A3A	28	270090
01643-30823	M4100-04A3A	29	270090
418-06-B1070	M4100-04A3A	30	270090
419-54-B5450	M4100-04A3A	31	270090
419-54-B5470	M4100-04A3A	32	270090
08037-02512	M4100-04A3A	33	270090
08053-01510	M4100-04A3A	34	270090
01010-81016	M4100-04A3A	35	270090
01643-31032	M4100-04A3A	36	270090
08051-00801	M4100-04A3A	37	270090
418-54-31712	M4100-05A0	1	270100
418-54-31732	M4100-05A0	2	270100
418-54-31742	M4100-05A0	3	270100
419-54-35210	M4100-05A0	4	270100
419-54-35230	M4100-05A0	5	270100
419-54-35260	M4100-05A0	6	270100
419-54-35270	M4100-05A0	7	270100
419-54-35280	M4100-05A0	8	270100

PARTS Nº	FIG. Nº	INDEX	PAGE
418-54-B1710	M4100-05A0A	1	270110
418-54-B1730	M4100-05A0A	2	270110
419-54-B5210	M4100-05A0A	3	270110
419-54-B5230	M4100-05A0A	4	270110
419-54-B5260	M4100-05A0A	5	270110
419-54-B5270	M4100-05A0A	6	270110
419-54-B5280	M4100-05A0A	7	270110
418-54-B2540	M4100-05A1	1	270120
418-54-B1710	M4100-05A1	1	270120
418-54-B1730	M4100-05A1	2	270120
419-54-B5210	M4100-05A1	3	270120
419-54-B5230	M4100-05A1	4	270120
419-54-B5260	M4100-05A1	5	270120
419-54-B5270	M4100-05A1	6	270120
419-54-B5560	M4100-05A1	7	270120
419-54-B5280	M4100-05A1	7	270120
419-54-31441	M4100-06A0	1	270130
01010-81016	M4100-06A0	2	270130
01643-31032	M4100-06A0	3	270130
419-54-31681	M4100-06A0	4	270130
419-54-31692	M4100-06A0	5	270130
418-54-31530	M4100-06A0	6	270130
418-54-31530	M4100-06A0	6	270130
419-54-31930	M4100-06A0	7	270130
01010-80820	M4100-06A0	8	270130
01643-30823	M4100-06A0	9	270130
419-54-31940	M4100-06A0	10	270130
419-54-31950	M4100-06A0	11	270130
419-54-31910	M4100-06A0	12	270130
419-54-B5370	M4100-06A1	1	270140
01010-81016	M4100-06A1	2	270140
01643-31032	M4100-06A1	3	270140
419-54-31681	M4100-06A1	4	270140
419-54-31692	M4100-06A1	5	270140
418-54-31530	M4100-06A1	6	270140
419-54-31930	M4100-06A1	7	270140
01010-80820	M4100-06A1	8	270140
01643-30823	M4100-06A1	9	270140
419-54-31940	M4100-06A1	10	270140
419-54-31950	M4100-06A1	11	270140
419-54-31910	M4100-06A1	12	270140
419-54-B5371	M4100-06A1A	1	270150
01010-81016	M4100-06A1A	2	270150
01643-31032	M4100-06A1A	3	270150
419-54-31910	M4100-06A1A	4	270150
01010-81230	M4100-07A0	1	270160
01643-31232	M4100-07A0	2	270160
416-54-21710	M4100-07A0	3	270160
01010-81230	M4100-07A1	1	270170
01643-31232	M4100-07A1	2	270170

PARTS Nº	FIG. Nº	INDEX	PAGE
416-54-21710	M4100-07A1	3	270170
419-54-31252	M4100-08A0	1	270180
01010-81025	M4100-08A0	2	270180
01643-31032	M4100-08A0	3	270180
419-54-31261	M4100-08A0	4	270180
01010-81025	M4100-08A0	5	270180
01643-31032	M4100-08A0	6	270180
418-54-34151	M4100-08A0	7	270180
417-54-21460	M4100-08A0	8	270180
01010-80816	M4100-08A0	9	270180
01643-30823	M4100-08A0	10	270180
12Y-02-11293	M4100-09A0	1	270190
600-181-3850	M4100-09A0	1	270190
418-54-31330	M4100-09A0	2	270190
07289-00120	M4100-09A0	3	270190
419-54-B5570	M4100-09A0	4	270190
419-54-31341	M4100-09A0	4	270190
01010-81020	M4100-09A0	5	270190
01643-31032	M4100-09A0	6	270190
12Y-02-11293	M4100-09A1	1	270200
600-181-3850	M4100-09A1	1	270200
418-54-31330	M4100-09A1	2	270200
07289-00120	M4100-09A1	3	270200
419-54-B5570	M4100-09A1	4	270200
419-54-31341	M4100-09A1	4	270200
01010-81020	M4100-09A1	5	270200
01643-31032	M4100-09A1	6	270200
419-54-B5570	M4100-09A2	1	270210
419-54-31860	M4100-09A2	1	270210
12Y-02-11293	M4100-09A2	2	270210
600-181-2630	M4100-09A2	2	270210
01643-31032	M4100-09A2	3	270210
01010-81025	M4100-09A2	4	270210
07289-00120	M4100-09A2	5	270210
418-54-31330	M4100-09A2	6	270210
419-54-B5570	M4100-09A2A	1	270220
419-54-31860	M4100-09A2A	1	270220
12Y-02-11293	M4100-09A2A	2	270220
600-181-2630	M4100-09A2A	2	270220
01643-31032	M4100-09A2A	3	270220
01010-81025	M4100-09A2A	4	270220
07289-00120	M4100-09A2A	5	270220
418-54-31330	M4100-09A2A	6	270220
416-Z91-2110	M4100-09A2A	7	270220
01010-80816	M4100-09A2A	8	270220
01643-30823	M4100-09A2A	9	270220
20Y-06-15240	M4100-10A0	1	270230
205-03-71532	M4100-10A0	2	270230
205-03-71540	M4100-10A0	2	270230
418-03-31360	M4100-10A0	3	270230

PARTS Nº	FIG. Nº	INDEX	PAGE
01010-81020	M4100-10A0	4	270230
01643-31032	M4100-10A0	5	270230
07287-00812	M4100-10A0	6	270230
07285-00125	M4100-10A0	7	270230
07285-00115	M4100-10A0	8	270230
419-03-31390	M4100-10A0	9	270230
04434-51710	M4100-10A0	10	270230
01010-80816	M4100-10A0	11	270230
01643-30823	M4100-10A0	12	270230
04434-51210	M4100-10A0	13	270230
01010-80816	M4100-10A0	14	270230
01643-30823	M4100-10A0	15	270230
04434-50812	M4100-10A0	16	270230
04434-51210	M4100-10A0	17	270230
01010-81020	M4100-10A0	18	270230
01643-31032	M4100-10A0	19	270230
419-54-32230	M4100-10A0	20	270230
419-54-31740	M4100-10A0	20	270230
419-54-32110	M4100-10A0	21	270230
419-54-31281	M4100-10A0	21	270230
419-54-32120	M4100-10A0	22	270230
01010-80816	M4100-10A0	23	270230
01643-30823	M4100-10A0	24	270230
419-54-31393	M4100-10A0	25	270230
419-54-31392	M4100-10A0	25	270230
01010-81020	M4100-10A0	26	270230
01643-31032	M4100-10A0	27	270230
419-54-31840	M4100-10A0	28	270230
419-54-31750	M4100-10A0	29	270230
419-54-31721	M4100-10A0	30	270230
419-54-31731	M4100-10A0	31	270230
01010-80816	M4100-10A0	32	270230
01643-30823	M4100-10A0	33	270230
419-54-31353	M4100-10A0	34	270230
419-54-31351	M4100-10A0	34	270230
23S-61-51730	M4100-10A0	35	270230
419-54-31490	M4100-10A0	35	270230
01010-81020	M4100-10A0	36	270230
01643-31032	M4100-10A0	37	270230
419-54-31760	M4100-10A0	38	270230
418-54-35180	M4100-10A0	39	270230
419-54-32140	M4100-10A0	40	270230
419-54-32130	M4100-10A0	41	270230
419-54-32190	M4100-10A0	42	270230
419-54-32170	M4100-10A0	43	270230
419-54-32180	M4100-10A0	44	270230
419-54-32240	M4100-10A0	45	270230
20Y-06-15240	M4100-10A1	1	270240
205-03-71532	M4100-10A1	2	270240
205-03-71540	M4100-10A1	2	270240
418-03-31360	M4100-10A1	3	270240
01010-81020	M4100-10A1	4	270240
01643-31032	M4100-10A1	5	270240
07287-00812	M4100-10A1	6	270240
07285-00125	M4100-10A1	7	270240
07285-00115	M4100-10A1	8	270240
419-03-31390	M4100-10A1	9	270240
04434-51710	M4100-10A1	10	270240
01010-80816	M4100-10A1	11	270240
01643-30823	M4100-10A1	12	270240
04434-51210	M4100-10A1	13	270240
01010-80816	M4100-10A1	14	270240
01643-30823	M4100-10A1	15	270240
04434-50812	M4100-10A1	16	270240
04434-51210	M4100-10A1	17	270240
01010-81020	M4100-10A1	18	270240
01643-31032	M4100-10A1	19	270240
419-54-B5330	M4100-10A1	20	270240
419-54-32110	M4100-10A1	21	270240
419-54-32120	M4100-10A1	22	270240
01010-80816	M4100-10A1	23	270240
01643-30823	M4100-10A1	24	270240
419-54-31393	M4100-10A1	25	270240
419-54-31392	M4100-10A1	25	270240
01010-81020	M4100-10A1	26	270240
01643-31032	M4100-10A1	27	270240
419-54-31840	M4100-10A1	28	270240
419-54-B5340	M4100-10A1	29	270240
419-54-31721	M4100-10A1	30	270240
419-54-31731	M4100-10A1	31	270240
01010-80816	M4100-10A1	32	270240
01643-30823	M4100-10A1	33	270240
419-54-31353	M4100-10A1	34	270240
23S-61-51730	M4100-10A1	35	270240
01010-81020	M4100-10A1	36	270240
01643-31032	M4100-10A1	37	270240
419-54-31760	M4100-10A1	38	270240
418-54-35180	M4100-10A1	39	270240
419-54-32140	M4100-10A1	40	270240
419-54-32130	M4100-10A1	41	270240
419-54-32190	M4100-10A1	42	270240
419-54-32170	M4100-10A1	43	270240
419-54-32180	M4100-10A1	44	270240
419-54-32240	M4100-10A1	45	270240
419-54-31771	M4100-11A2	1	270250
419-54-31890	M4100-11A2	2	270250
01010-80820	M4100-11A2	3	270250
01643-30823	M4100-11A2	4	270250
01643-30823	M4100-11A2	5	270250
203-54-56970	M4100-11A2	6	270250
01010-81020	M4100-11A2	7	270250
419-54-31580	M4100-11A2	8	270250
419-54-31590	M4100-11A2	9	270250
01010-81025	M4100-11A2	10	270250
01643-31032	M4100-11A2	11	270250
419-54-31481	M4100-11A2	12	270250
417-43-16210	M4100-11A2	13	270250
01643-31032	M4100-11A2	14	270250
04050-12015	M4100-11A2	15	270250
419-54-31771	M4100-11A3	1	270260
419-54-31890	M4100-11A3	2	270260
01010-80820	M4100-11A3	3	270260
01643-30823	M4100-11A3	4	270260
01643-30823	M4100-11A3	5	270260
203-54-56970	M4100-11A3	6	270260
01010-81020	M4100-11A3	7	270260
419-54-31580	M4100-11A3	8	270260
419-54-31590	M4100-11A3	9	270260
01010-81025	M4100-11A3	10	270260
01643-31032	M4100-11A3	11	270260
419-54-31481	M4100-11A3	12	270260
417-43-16210	M4100-11A3	13	270260
01643-31032	M4100-11A3	14	270260
04050-12015	M4100-11A3	15	270260
416-Z91-2110	M4100-13A2	1	270270
01010-80816	M4100-13A2	2	270270
01643-30823	M4100-13A2	3	270270
419-54-31212	M4200-01A0	1	270280
01010-81230	M4200-01A0	2	270280
01643-31232	M4200-01A0	3	270280
01010-81225	M4200-01A0	2	270280
01643-31232	M4200-01A0	3	270280
22B-00-11210	M4200-01A0	4	270280
154-54-23260	M4200-01A0	5	270280
421-54-22990	M4200-01A0	6	270280
419-54-31222	M4200-01A0	7	270280
01010-81230	M4200-01A0	8	270280
01010-81225	M4200-01A0	8	270280
01643-31232	M4200-01A0	9	270280
01643-31232	M4200-01A0	9	270280
22B-00-11210	M4200-01A0	10	270280
154-54-23260	M4200-01A0	11	270280
421-54-22990	M4200-01A0	12	270280
419-54-31230	M4200-01A0	13	270280
01010-81225	M4200-01A0	14	270280
01643-31232	M4200-01A0	15	270280
419-54-31240	M4200-01A0	18	270280
01010-81225	M4200-01A0	19	270280
01643-31232	M4200-01A0	20	270280
01010-81230	M4200-01A0	21	270280
01643-31232	M4200-01A0	22	270280
419-54-B4110	M4200-01A0	23	270280
419-54-34221	M4210-01A0	1	270290
01010-81225	M4210-01A0	2	270290
01643-31232	M4210-01A0	3	270290
419-54-34231	M4210-01A0	4	270290
01010-81225	M4210-01A0	5	270290
01643-31232	M4210-01A0	6	270290
419-54-34170	M4210-01A0	7	270290
419-54-34151	M4210-01A0	8	270290
419-54-34161	M4210-01A0	9	270290
418-54-24570	M4210-01A0	10	270290
01010-81230	M4210-01A0	11	270290
01643-31232	M4210-01A0	12	270290
01643-31232	M4210-01A0	13	270290
01580-11210	M4210-01A0	14	270290
203-54-55660	M4210-01A0	15	270290
01010-81025	M4210-01A0	16	270290
419-54-34312	M4230-01A0	1	270300
01010-81030	M4230-01A0	2	270300
01643-31032	M4230-01A0	3	270300
419-54-34322	M4230-01A0	4	270300
01010-81030	M4230-01A0	5	270300
01643-31032	M4230-01A0	6	270300
419-54-34343	M4230-01A0	7	270300
01010-81030	M4230-01A0	8	270300
01643-31032	M4230-01A0	9	270300
419-54-34411	M4230-01A0	10	270300
01010-81030	M4230-01A0	11	270300
01643-31032	M4230-01A0	12	270300
419-54-34332	M4230-01A0	13	270300
01010-81030	M4230-01A0	14	270300
01643-31032	M4230-01A0	15	270300
419-54-34353	M4230-01A0	16	270300
01010-81030	M4230-01A0	17	270300
01643-31032	M4230-01A0	18	270300
419-54-34421	M4230-01A0	19	270300
01010-81030	M4230-01A0	20	270300
01643-31032	M4230-01A0	21	270300
419-54-34380	M4230-01A0	22	270300
01010-81020	M4230-01A0	23	270300
01643-31032	M4230-01A0	24	270300
417-06-11321	M4230-01A0	25	270300
418-54-35510	M4310-01A0	1	270310
01010-81225	M4310-01A0	2	270310
01643-31232	M4310-01A0	3	270310
419-54-34122	M4310-01A0	4	270310
01010-81225	M4310-01A0	5	270310
01643-31232	M4310-01A0	6	270310
01010-81230	M4310-01A1	1	270320
01643-31232	M4310-01A1	2	270320
418-54-34851	M4410-01A1	1	270320
418-54-34862	M4410-01A1	2	270320
22M-54-26180	M4410-01A1	2A	270320
01435-01025	M4410-01A1	3	270320
363-54-31450	M4410-01A1	4	270320
01643-31032	M4410-01A1	5	270320
421-54-25610	M4410-01A1	6	270320
421-54-25620	M4410-01A1	6	270320
421-54-25630	M4410-01A1	6	270320
421-54-25640	M4410-01A1	6	270320
421-54-25650	M4410-01A1	6	270320
421-54-25660	M4410-01A1	6	270320
04025-00632	M4410-01A1	7	270320
08034-40521	M4410-01A1	8	270320
01640-21016	M4410-01A1	9	270320
01023-70416	M4410-01A1	10	270320
01023-20416	M4410-01A1	10	270320
01643-30623	M4410-01A1	11	270320
07049-01012	M4410-01A1	12	270320
419-46-35210	M4510-01A3	1	270330
01011-62480	M4510-01A3	2	270330
01643-32060	M4510-01A3	3	270330
418-46-35140	M4510-01A3	4	270330
418-04-31181	M4510-01A3	5	270330
01010-81235	M4510-01A3	6	270330
01643-31232	M4510-01A3	7	270330
419-975-3112	M4510-01A3	8	270330
419-975-3112	M4510-01A3	8	270330
419-975-B110	M4510-01A3	8A	270330
01010-82090	M4510-01A3	9	270330
01643-32060	M4510-01A3	10	270330
07049-01012	M4510-01A3	11	270330
419-46-35210	M4510-01A4	1	270340
01011-62480	M4510-01A4	2	270340
01643-32060	M4510-01A4	3	270340
418-46-35140	M4510-01A4	4	270340
418-04-31181	M4510-01A4	5	270340
01010-81235	M4510-01A4	6	270340
01643-31232	M4510-01A4	7	270340
419-975-3112	M4510-01A4	8	270340
419-975-3112	M4510-01A4	8	270340
419-975-B110	M4510-01A4	8A	270340
01010-82090	M4510-01A4	9	270340
01643-32060	M4510-01A4	10	270340
07049-01012	M4510-01A4	11	270340
419-54-B5550	M4510-01A4	12	270340
01010-81020	M4510-01A4	13	270340
01643-31032	M4510-01A4	14	270340
417-46-35210	M4510-01A5	1	270341
01011-62480	M4510-01A5	2	270341
01643-32460	M4510-01A5	3	270341
418-46-35140	M4510-01A5	4	270341
418-975-3114	M4510-01A5	5	270341
418-975-B150	M4510-01A5	6	270341
01010-82065	M4510-01A5	7	270341
01643-32060	M4510-01A5	8	270341
418-04-31181	M4510-01A5	9	270341
01010-81235	M4510-01A5	10	270341
01643-31232	M4510-01A5	11	270341
07049-01012	M4510-01A5	12	270341
417-54-B5410	M4510-01A5	13	270341
417-54-B5420	M4510-01A5	13	270341
12Y-03-11840	M4510-01A5	13	270341
417-54-B5540	M4510-01A5	13	270341
01010-81020	M4510-01A5	14	270341
01643-31032	M4510-01A5	15	270341
419-30-B1401	S0110-01A0	1	300010
419-30-B1400	S0110-01A0	1	300010
419-30-B1411	S0110-01A0	1	300010
419-30-B1410	S0110-01A0	1	300010
418-30-31240	S0110-01A0	2	300010
418-30-31250	S0110-01A0	3	300010
09280-00040	S0110-01A0	4	300010
419-30-11630	S0110-01A0	5	300010
419-X17-1110	S0120-01A0	1	300020
423-X19-1130	S0120-01A1	1	300030
419-X51-1110	S0120-01A1A	1	300040
423-X86-2110	S0120-01A2	1	300050
09280-10040	S0120-01A2	2	300050
09280-10130	S0120-01A2	2	300050
09281-00041	S0120-01A2	3	300050
09283-00000	S0120-01A2	4	300050
09285-00000	S0120-01A2	5	300050
09282-00017	S0120-01A2	6	300050
419-30-11630	S0120-01A2	7	300050
419-70-31501	T4110-01A0	1	330010
419-70-21810	T4110-01A0	2	330010
419-70-31810	T4110-01A0	3	330010
419-70-11890	T4110-01A0	4	330010
419-09-11110	T4110-01A0	5	330010
424-09-12320	T4110-01A0	6	330010
419-70-31203	T4110-01A0	7	330010
419-70-31202	T4110-01A0	7	330010
419-70-31201	T4110-01A0	7	330010
419-70-31870	T4110-01A0	8	330010
421-09-11320	T4110-01A0	9	330010
07020-00900	T4110-01A0	10	330010
419-70-31301	T4110-01A0	11	330010
419-70-11820	T4110-01A0	12	330010

PARTS Nº	FIG. Nº	INDEX	PAGE
419-09-11110	T4110-01A0	13	330010
419-70-31220	T4110-01A0	14	330010
07020-00675	T4110-01A0	15	330010
419-70-11460	T4110-01A0	16	330010
419-70-11470	T4110-01A0	16	330010
419-70-B4210	T4110-01A0	16A	330010
01010-81625	T4110-01A0	17	330010
421-70-11280	T4110-01A0	18	330010
419-70-31921	T4110-01A0	19	330010
419-70-31920	T4110-01A0	19	330010
419-70-11420	T4110-01A0	20	330010
419-70-11430	T4110-01A0	20	330010
419-70-11410	T4110-01A0	22	330010
419-70-11490	T4110-01A0	23	330010
01596-00606	T4110-01A0	24	330010
01641-20608	T4110-01A0	25	330010
01010-81625	T4110-01A0	26	330010
421-70-11280	T4110-01A0	27	330010
07020-00000	T4110-01A0	28	330010
419-70-31960	T4110-01A0	29	330010
01010-81630	T4110-01A0	30	330010
421-70-11280	T4110-01A0	31	330010
07049-01012	T4110-01A0	32	330010
419-877-3370	T4110-01A1	1	330020
419-877-3361	T4110-01A1	1	330020
419-70-21810	T4110-01A1	2	330020
419-70-31810	T4110-01A1	3	330020
419-70-11890	T4110-01A1	4	330020
419-09-11110	T4110-01A1	5	330020
424-09-12320	T4110-01A1	6	330020
419-70-31203	T4110-01A1	7	330020
419-70-31202	T4110-01A1	7	330020
419-70-31201	T4110-01A1	7	330020
419-70-31870	T4110-01A1	8	330020
421-09-11320	T4110-01A1	9	330020
07020-00900	T4110-01A1	10	330020
419-70-31301	T4110-01A1	11	330020
419-70-11820	T4110-01A1	12	330020
419-09-11110	T4110-01A1	13	330020
419-70-31220	T4110-01A1	14	330020
07020-00675	T4110-01A1	15	330020
419-70-11460	T4110-01A1	16	330020
419-70-11470	T4110-01A1	16	330020
419-70-B4210	T4110-01A1	16A	330020
01010-81625	T4110-01A1	17	330020
421-70-11280	T4110-01A1	18	330020
419-70-31921	T4110-01A1	19	330020
419-70-31920	T4110-01A1	19	330020
419-70-11420	T4110-01A1	20	330020
419-70-11430	T4110-01A1	20	330020
419-70-11480	T4110-01A1	21	330020
419-70-11410	T4110-01A1	22	330020
419-70-11490	T4110-01A1	23	330020
01596-00606	T4110-01A1	24	330020
01641-20608	T4110-01A1	25	330020
01010-81625	T4110-01A1	26	330020
421-70-11280	T4110-01A1	27	330020
07020-00000	T4110-01A1	28	330020
419-70-31960	T4110-01A1	29	330020
01010-81630	T4110-01A1	30	330020
421-70-11280	T4110-01A1	31	330020
419-70-31912	T4110-02A0	1	330030
419-70-31911	T4110-02A0	1	330030
419-70-31912	T4110-02A0	2	330030
419-70-31911	T4110-02A0	2	330030
419-70-11420	T4110-02A0	3	330030
419-70-11430	T4110-02A0	3	330030
419-70-11410	T4110-02A0	5	330030
419-70-11490	T4110-02A0	6	330030
01596-00606	T4110-02A0	7	330030
01641-20608	T4110-02A0	8	330030
01010-81625	T4110-02A0	9	330030
421-70-11280	T4110-02A0	10	330030
07020-00000	T4110-02A0	11	330030
419-43-39111	T4110-03A0	1	330040
01010-81225	T4110-03A0	2	330040
01643-31232	T4110-03A0	3	330040
419-43-39122	T4110-03A0	4	330040
01010-81225	T4110-03A0	5	330040
01643-31232	T4110-03A0	6	330040
56B-06-15610	T4110-03A0	7	330040
419-70-B4101	T4120-01A5	1	330050
419-70-B4100	T4120-01A5	1	330050
416-70-22190	T4120-01A5	1	330050
04418-13060	T4120-01A5	1A	330050
419-70-B4111	T4120-01A5	2	330050
419-70-B4110	T4120-01A5	2	330050
419-T65-2120	T4120-01A5	3	330050
419-70-12221	T4120-01A5	3	330050
419-70-B4140	T4120-01A5	4	330050
419-70-B3270	T4120-01A5	5	330050
419-838-1110	T4125-01A0	1	330070
421-838-1110	T4125-01A0	2	330070
02090-11685	T4125-01A0	3	330070
01643-22460	T4125-01A0	4	330070
02290-11625	T4125-01A0	5	330070
202-70-12130	T4130-01A1	1	330080
09244-02496	T4130-01A1	2	330080
419-847-1111	T4130-01A1	3	330080
02090-11695	T4130-01A1	4	330080
09218-12523	T4130-01A1	5	330080
419-70-13120	T4130-01A1	6	330080
419-70-13130	T4130-01A1	6	330080
202-70-12130	T4130-01A1	7	330080
09244-02496	T4130-01A1	8	330080
419-847-1121	T4130-01A1	9	330080
419-847-1131	T4130-01A1	9	330080
02090-11695	T4130-01A1	10	330080
419-70-13150	T4130-01A1	11	330080
09218-12523	T4130-01A1	12	330080
02290-11625	T4130-01A1	13	330080
01643-32780	T4130-01A1	14	330080
419-70-13180	T4130-01A1	15	330080
419-70-13190	T4130-01A1	15	330080
707-01-XU360	T4140-01A0	1	330090
707-01-XU370	T4140-01A0	2	330090
419-70-31220	T4140-01A0	3	330090
07020-00000	T4140-01A0	4	330090
419-70-11460	T4140-01A0	5	330090
419-70-11470	T4140-01A0	5	330090
01010-81625	T4140-01A0	6	330090
421-70-11280	T4140-01A0	7	330090
419-70-31232	T4140-01A0	8	330090
423-70-11711	T4140-01A0	9	330090
07020-00900	T4140-01A0	10	330090
207-62-51450	T4140-01A0	11	330090
01010-81635	T4140-01A0	12	330090
01643-31645	T4140-01A0	13	330090
707-01-XU380	T4150-01A0	1	330100
423-70-11781	T4150-01A0	2	330100
423-70-11881	T4150-01A0	2	330100
423-70-41960	T4150-01A0	2	330100
01010-81625	T4150-01A0	3	330100
421-70-11280	T4150-01A0	4	330100
419-70-11950	T4150-01A0	5	330100
419-70-11941	T4150-01A0	6	330100
01010-81625	T4150-01A0	7	330100
421-70-11280	T4150-01A0	8	330100
423-70-11781	T4150-01A0	9	330100
423-70-11881	T4150-01A0	9	330100
423-70-41960	T4150-01A0	9	330100
419-93-B4140	U0100-01A0	1	360010
419-93-B4150	U0100-01A0	2	360010
419-93-22160	U0100-01A0	3	360010
09669-0000E	U0100-01A0	12	360010
09161-27100	U0100-01A0	13	360010

PARTS Nº	FIG. Nº	INDEX	PAGE
09161-C0641	U0100-01A0	13	360010
09653-07101	U0100-01A0	14	360010
09653-A0641	U0100-01A0	14	360010
09162-27000	U0100-01A0	15	360010
09162-C0641	U0100-01A0	15	360010
09807-C0883	U0100-01A0	16	360010
09667-07101	U0100-01A0	17	360010
09667-A0880	U0100-01A0	17	360010
09812-17000	U0100-01A0	18	360010
09806-C0883	U0100-01A0	18	360010
09808-07100	U0100-01A0	19	360010
09808-A1201	U0100-01A0	19	360010
09668-07101	U0100-01A0	20	360010
09668-07101	U0100-01A0	20	360010
09653-A0641	U0100-01A0	20	360010
09659-57100	U0100-01A0	21	360010
09659-A057B	U0100-01A0	21	360010
09963-07001	U0100-01A0	22	360010
09963-A1640	U0100-01A0	22	360010
419-93-B4170	U0100-01A1	1	360020
419-93-B4180	U0100-01A1	2	360020
417-93-32230	U0100-01A1	3	360020
09690-P0800	U0100-01A1	4	360020
419-93-B2110	U0100-01A1	5	360020
09960-01601	U0100-01A1	6	360020
419-93-B2120	U0100-01A1	7	360020
09669-0000E	U0100-01A1	12	360020
09161-27100	U0100-01A1	13	360020
09161-C0641	U0100-01A1	13	360020
09653-07101	U0100-01A1	14	360020
09653-A0641	U0100-01A1	14	360020
09162-27000	U0100-01A1	15	360020
09162-C0641	U0100-01A1	15	360020
09807-C0883	U0100-01A1	16	360020
09667-07101	U0100-01A1	17	360020
09667-A0880	U0100-01A1	17	360020
09812-17000	U0100-01A1	18	360020
09806-C0883	U0100-01A1	18	360020
09808-07100	U0100-01A1	19	360020
09808-A1201	U0100-01A1	19	360020
09668-07101	U0100-01A1	20	360020
09653-A0641	U0100-01A1	20	360020
09659-57100	U0100-01A1	21	360020
09659-57100	U0100-01A1	21	360020
09659-A057B	U0100-01A1	21	360020
09963-07001	U0100-01A1	22	360020
09963-A1640	U0100-01A1	22	360020
419-93-B4140	U0100-01A2	1	360030
419-93-B4150	U0100-01A2	2	360030
419-93-22160	U0100-01A2	3	360030
09690-P0800	U0100-01A2	4	360030
419-V00-3120	U0100-01A2	5	360030
09960-01601	U0100-01A2	6	360030
417-V00-3110	U0100-01A2	7	360030
09669-0000E	U0100-01A2	12	360030
09161-21000	U0100-01A2	13	360030
09653-01001	U0100-01A2	14	360030
09162-21000	U0100-01A2	15	360030
09807-C0883	U0100-01A2	16	360030
09667-01001	U0100-01A2	17	360030
09812-11000	U0100-01A2	18	360030
09808-01000	U0100-01A2	19	360030
09668-01001	U0100-01A2	20	360030
09659-51000	U0100-01A2	21	360030
09963-01001	U0100-01A2	22	360030
418-93-B1151	U0100-02A0	1	360040
418-93-B1150	U0100-02A0	1	360040
418-93-B1120	U0100-02A0	13	360040
418-93-B1160	U0100-02A0	14	360040
418-93-B1140	U0100-02A0	15	360040
421-93-B1010	U0100-02A0	16	360040
418-V00-3210	U0100-02A0A	1	360050
09651-01001	U0100-02A0A	10	360050
09654-01001	U0100-02A0A	11	360050
09801-11001	U0100-02A0A	12	360050
418-93-B1180	U0100-02A0A	13	360050
418-V00-3220	U0100-02A0A	14	360050
418-93-B1190	U0100-02A0A	15	360050
09845-00480	U0205-01A0	1	360060
418-18-34160	V0100-01A1	1	390010
419-60-35152	V0100-01A1	2	390010
6732-81-6170	V0100-01A1	3	390010
07020-00000	V0100-01A1	4	390010
07020-00675	V0100-01A1	5	390010
07020-00900	V0100-01A1	6	390010
07952-70004	V0300-01A1	1	390020
07950-10450	V0300-01A1	1	390020
07951-41017	V0300-01A1	2	390020
07950-90403	V0300-01A1	3	390020
09289-00000	V0300-01A1	4	390020
417-98-B1120	V0300-01A1	5	390020
09001-03600	V0300-01A1	6	390020
09019-08035	V0300-01A1	7	390020
09056-04613	V0300-01A1	8	390020
09002-01417	V0300-01A1	9	390020
09002-01922	V0300-01A1	10	390020
09002-03032	V0300-01A1	11	390020
07000-15090	V0300-01A1	12	390020
09963-03001	V0300-01A1	13	390020
418-98-31110	V0300-01A1	14	390020
09460-00004	V0300-01A5	1	390030
419-18-31103	Y1610-01A0	1	420010
419-18-31102	Y1610-01A0	1	420010
UC40960793991	Y1610-01A0	1	420010
UC40202776061	Y1610-01A0	2	420010
UC40204828081	Y1610-01A0	3	420010
419-18-31440	Y1610-01A0	4	420010
UC47044656081	Y1610-01A0	4	420010
UC17043501691	Y1610-01A0	5	420010
UC10260229371	Y1610-01A0	6	420010
UC10260197021	Y1610-01A0	7	420010
UC10260229281	Y1610-01A0	8	420010
UC17015442791	Y1610-01A0	9	420010
UC10260185071	Y1610-01A0	10	420010
UC10260197111	Y1610-01A0	11	420010
UC17015336461	Y1610-01A0	12	420010
UC17015657081	Y1610-01A0	13	420010
UC10203561691	Y1610-01A0	14	420010
UC17008740561	Y1610-01A0	15	420010
UC17042670391	Y1610-01A0	16	420010
UC10207787351	Y1610-01A0	17	420010
UC10908305771	Y1610-01A0	18	420010
UC10907991371	Y1610-01A0	19	420010
UC10260239031	Y1610-01A0	20	420010
419-18-31103	Y1610-02A0	1	420020
419-18-31102	Y1610-02A0	1	420020
UC40960793991	Y1610-02A0	1	420020
UC10204055651	Y1610-02A0	1	420020
UC40207682941	Y1610-02A0	2	420020
UC10992172031	Y1610-02A0	3	420020
UC17044512261	Y1610-02A0	4	420020
UC17044903491	Y1610-02A0	5	420020
UC17092170761	Y1610-02A0	6	420020
UC17042141821	Y1610-02A0	7	420020
UC17043250531	Y1610-02A0	8	420020
UC17043250621	Y1610-02A0	8	420020
UC17043250711	Y1610-02A0	8	420020
UC17043250891	Y1610-02A0	8	420020
UC10992171931	Y1610-02A0	9	420020
UC10943226491	Y1610-02A0	10	420020
UC10206659411	Y1610-02A0	11	420020
UC10992171751	Y1610-02A0	12	420020
UC17043546571	Y1610-02A0	13	420020
UC17015626991	Y1610-02A0	14	420020
UC17083057871	Y1610-02A0	15	420020
UC17008441651	Y1610-02A0	16	420020
UC10260000291	Y1610-02A0	17	420020
UC17083098081	Y1610-02A0	18	420020
UC17008340581	Y1610-02A0	19	420020
419-18-31103	Y1610-03A0	1	420030

PARTS Nº	FIG. Nº	INDEX	PAGE
419-18-31102	Y1610-03A0	1	420030
UC40202559541	Y1610-03A0	1	420030
UC10201074541	Y1610-03A0	2	420030
UC10201074631	Y1610-03A0	3	420030
UC17015747751	Y1610-03A0	4	420030
UC17008303861	Y1610-03A0	5	420030
UC10908536081	Y1610-03A0	6	420030
UC10943279011	Y1610-03A0	7	420030
UC17015245961	Y1610-03A0	8	420030
UC10260083991	Y1610-03A0	9	420030
UC10260027221	Y1610-03A0	10	420030
419-18-31103	Y1610-04A0	1	420040
419-18-31102	Y1610-04A0	1	420040
UC40202559541	Y1610-04A0	1	420040
UC17008633311	Y1610-04A0	2	420040
419-18-31103	Y1610-05A0	1	420050
419-18-31102	Y1610-05A0	1	420050
UC47260187961	Y1610-05A0	1	420050
UC10915789591	Y1610-05A0	1	420050
UC47043485671	Y1610-05A0	2	420050
UC47043383491	Y1610-05A0	3	420050
UC17044906341	Y1610-05A0	4	420050
UC10908314511	Y1610-05A0	5	420050
UC10983021711	Y1610-05A0	6	420050
UC10983132091	Y1610-05A0	7	420050
UC17015169261	Y1610-05A0	8	420050
UC10983131991	Y1610-05A0	9	420050
UC17008633311	Y1610-05A0	10	420050
UC10260185071	Y1610-05A0	11	420050
UC10943277451	Y1610-05A0	12	420050
UC17043277381	Y1610-05A0	13	420050
UC10908349821	Y1610-05A0	14	420050
UC40207115821	Y1610-05A0	15	420050
419-18-31103	Y1610-06A0	1	420060
419-18-31102	Y1610-06A0	1	420060
UC47043485671	Y1610-06A0	1	420060
UC17008376171	Y1610-06A0	2	420060
UC17015327171	Y1610-06A0	3	420060
419-18-31103	Y1610-08A0	1	420080
419-18-31102	Y1610-08A0	1	420080
UC47043383491	Y1610-08A0	1	420080
UC17008375791	Y1610-08A0	2	420080
UC17015270721	Y1610-08A0	3	420080
UC10908638071	Y1610-08A0	4	420080
419-18-31103	Y1610-08A0	1	420080
419-18-31102	Y1610-08A0	1	420080
UC40207115821	Y1610-08A0	1	420080
UC17008375251	Y1610-08A0	2	420080
UC17008570971	Y1610-08A0	3	420080
419-18-31103	Y1610-09A0	1	420090
419-18-31102	Y1610-09A0	1	420090
UC10915788121	Y1610-09A0	1	420090
UC17008536461	Y1610-09A0	2	420090
419-18-31103	Y1610-10A0	1	420100
419-18-31102	Y1610-10A0	1	420100
UC10915788121	Y1610-10A0	1	420100
419-18-31103	Y1610-11A0	1	420110
419-18-31102	Y1610-11A0	1	420110
UC10260064121	Y1610-11A0	1	420110
UC10908633291	Y1610-11A0	2	420110
UC17008570971	Y1610-11A0	3	420110
419-18-31103	Y1610-12A0	1	420120
419-18-31102	Y1610-12A0	1	420120
UC17008554591	Y1610-12A0	1	420120
UC17015270721	Y1610-12A0	2	420120
419-18-31450	Y1610-12A0	3	420120
705-56-36051	Y1610-31A0	1	420130
705-56-36050	Y1610-31A0	1	420130
705-38-39000	Y1610-31A0	1	420130
705-18-03620	Y1610-31A0	1	420130
705-17-03350	Y1610-31A0	1	420130
705-17-39010	Y1610-31A0	2	420130
705-18-03240	Y1610-31A0	3	420130
705-17-03350	Y1610-31A0	3	420130
04020-01228	Y1610-31A0	4	420130
705-17-03381	Y1610-31A0	5	420130
705-19-39130	Y1610-31A0	6	420130
705-17-39810	Y1610-31A0	7	420130
705-17-03610	Y1610-31A0	8	420130
705-17-03443	Y1610-31A0	9	420130
705-17-03473	Y1610-31A0	10	420130
01253-61635	Y1610-31A0	11	420130
01643-51645	Y1610-31A0	12	420130
705-17-03870	Y1610-31A0	13	420130
705-17-03811	Y1610-31A0	14	420130
04065-05220	Y1610-31A0	15	420130
705-56-36051	Y1610-32A0	1	420140
705-56-36050	Y1610-32A0	1	420140
705-38-30060	Y1610-32A0	1	420140
705-19-02551	Y1610-32A0	1	420140
705-17-02353	Y1610-32A0	1	420140
705-17-30012	Y1610-32A0	2	420140
705-17-02221	Y1610-32A0	3	420140
705-17-02353	Y1610-32A0	3	420140
04020-01024	Y1610-32A0	4	420140
04020-01228	Y1610-32A0	5	420140
705-17-02360	Y1610-32A0	6	420140
705-19-30760	Y1610-32A0	7	420140
705-17-30512	Y1610-32A0	8	420140
705-17-02612	Y1610-32A0	9	420140
705-17-02430	Y1610-32A0	10	420140
705-17-02460	Y1610-32A0	11	420140
01253-61200	Y1610-32A0	12	420140
01643-51232	Y1610-32A0	13	420140
705-17-02330	Y1610-32A0	14	420140
705-17-03381	Y1610-32A0	15	420140
01252-61450	Y1610-32A0	16	420140
705-17-04980	Y1610-32A0	17	420140
705-56-36051	Y1610-33A0	1	420150
705-56-36050	Y1610-33A0	1	420150
705-41-04460	Y1610-33A0	1	420150
705-41-83030	Y1610-33A0	1	420150
705-40-80610	Y1610-33A0	1	420150
705-40-80620	Y1610-33A0	1	420150
705-40-30011	Y1610-33A0	2	420150
705-40-80331	Y1610-33A0	3	420150
705-40-80610	Y1610-33A0	3	420150
705-40-80620	Y1610-33A0	3	420150
705-40-30640	Y1610-33A0	4	420150
705-40-30510	Y1610-33A0	5	420150
705-40-83720	Y1610-33A0	6	420150
705-40-80770	Y1610-33A0	7	420150
04020-00820	Y1610-33A0	8	420150
04020-01024	Y1610-33A0	9	420150
705-67-01230	Y1610-33A0	10	420150
01252-61280	Y1610-33A0	11	420150
01643-51232	Y1610-33A0	12	420150
705-67-01330	Y1610-33A0	13	420150
705-17-02360	Y1610-33A0	14	420150
01252-61035	Y1610-33A0	15	420150
01643-51032	Y1610-33A0	16	420150
705-17-01880	Y1610-33A0	17	420150
07000-E3032	Y1610-33A0	18	420150
01010-81025	Y1610-33A0	19	420150
01643-51032	Y1610-33A0	20	420150
705-56-36051	Y1610-34A0	1	420160
705-56-36050	Y1610-34A0	1	420160
705-41-05690	Y1610-34A0	1	420160
705-41-83510	Y1610-34A0	1	420160
705-40-83630	Y1610-34A0	1	420160
705-40-83640	Y1610-34A0	1	420160
705-40-24E70	Y1610-34A0	2	420160
705-40-83640	Y1610-34A0	2	420160
705-40-83630	Y1610-34A0	2	420160
705-40-24L50	Y1610-34A0	3	420160
705-40-24H10	Y1610-34A0	4	420160
705-40-83720	Y1610-34A0	5	420160
705-40-80770	Y1610-34A0	6	420160
705-40-80880	Y1610-34A0	7	420160
705-40-83760	Y1610-34A0	8	420160

PARTS Nº	FIG. Nº	INDEX	PAGE
705-40-81820	Y1610-34A0	9	420160
705-40-81870	Y1610-34A0	10	420160
04065-03012	Y1610-34A0	11	420160
01252-71055	Y1610-34A0	12	420160
01643-51032	Y1610-34A0	13	420160
04020-00514	Y1610-34A0	14	420160
705-67-01330	Y1610-34A0	15	420160
705-40-80670	Y1610-34A0	16	420160
01252-60830	Y1610-34A0	17	420160
01643-50823	Y1610-34A0	18	420160
707-01-XF060	Y1620-01A0	G1	420170
707-01-XU360	Y1620-01A0	G1	420170
707-01-XF070	Y1620-01A0	G1	420170
707-01-XU370	Y1620-01A0	G1	420170
707-01-0F060	Y1620-01A0	1	420170
707-13-14690	Y1620-01A0	1	420170
707-76-85010	Y1620-01A0	2	420170
424-09-12320	Y1620-01A0	3	420170
707-27-14860	Y1620-01A0	4	420170
707-52-90520	Y1620-01A0	5	420170
707-51-75030	Y1620-01A0	6	420170
707-51-75640	Y1620-01A0	7	420170
144-63-94170	Y1620-01A0	8	420170
07179-13089	Y1620-01A0	9	420170
07000-12135	Y1620-01A0	10	420170
07146-02136	Y1620-01A0	11	420170
01010-81455	Y1620-01A0	12	420170
01643-31445	Y1620-01A0	13	420170
707-59-75050	Y1620-01A0	14	420170
07000-15075	Y1620-01A0	15	420170
707-35-90810	Y1620-01A0	16	420170
707-36-14040	Y1620-01A0	17	420170
707-44-14180	Y1620-01A0	18	420170
07156-01417	Y1620-01A0	19	420170
01310-01216	Y1620-01A0	20	420170
707-86-66840	Y1620-01A0	21	420170
707-86-66860	Y1620-01A0	21	420170
707-86-66850	Y1620-01A0	22	420170
707-86-66870	Y1620-01A0	22	420170
07000-13030	Y1620-01A0	23	420170
01435-01040	Y1620-01A0	24	420170
01435-01055	Y1620-01A0	25	420170
707-88-02750	Y1620-01A0	26	420170
07283-32738	Y1620-01A0	27	420170
01597-01009	Y1620-01A0	28	420170
01643-31032	Y1620-01A0	29	420170
02896-11018	Y1620-01A0	30	420170
707-99-53170	Y1620-01A0	K	420170
707-01-XU380	Y1620-11A0	G1	420180
707-01-0F080	Y1620-11A0	1	420180
707-13-16830	Y1620-11A0	1	420180
707-76-95040	Y1620-11A0	2	420180
421-09-11310	Y1620-11A0	3	420180
707-27-16860	Y1620-11A0	4	420180
707-52-90560	Y1620-11A0	5	420180
707-51-80030	Y1620-11A0	6	420180
707-51-80640	Y1620-11A0	7	420180
195-63-92190	Y1620-11A0	8	420180
07179-13094	Y1620-11A0	9	420180
07000-15150	Y1620-11A0	10	420180
07146-05152	Y1620-11A0	11	420180
707-88-02770	Y1620-11A0	12	420180
707-88-02760	Y1620-11A0	13	420180
01010-81665	Y1620-11A0	14	420180
01010-81660	Y1620-11A0	15	420180
01643-31645	Y1620-11A0	16	420180
707-58-80690	Y1620-11A0	17	420180
707-76-95050	Y1620-11A0	18	420180
421-09-11310	Y1620-11A0	19	420180
419-09-11250	Y1620-11A0	20	420180
07000-15080	Y1620-11A0	21	420180
707-35-90820	Y1620-11A0	22	420180
707-36-16640	Y1620-11A0	23	420180
707-44-16180	Y1620-11A0	24	420180
07156-01620	Y1620-11A0	25	420180
01310-01216	Y1620-11A0	26	420180
707-86-12310	Y1620-11A0	27	420180
07040-11007	Y1620-11A0	28	420180
07002-11023	Y1620-11A0	29	420180
07000-13035	Y1620-11A0	30	420180
01435-01055	Y1620-11A0	31	420180
07283-33442	Y1620-11A0	32	420180
01597-01009	Y1620-11A0	33	420180
01643-31032	Y1620-11A0	34	420180
707-99-62120	Y1620-11A0	K	420180
707-00-0Z680	Y1622-01A0	1	420190
707-11-70100	Y1622-01A0	1	420190
707-76-40020	Y1622-01A0	2	420190
419-09-11120	Y1622-01A0	3	420190
07020-00000	Y1622-01A0	4	420190
707-29-70620	Y1622-01A0	5	420190
707-52-90150	Y1622-01A0	6	420190
707-51-40030	Y1622-01A0	7	420190
707-51-40640	Y1622-01A0	8	420190
198-63-75190	Y1622-01A0	9	420190
07179-12052	Y1622-01A0	10	420190
07000-12065	Y1622-01A0	11	420190
07146-02066	Y1622-01A0	12	420190
07000-12070	Y1622-01A0	13	420190
707-58-40A60	Y1622-01A0	14	420190
707-76-40020	Y1622-01A0	15	420190
419-09-11120	Y1622-01A0	16	420190
07020-00675	Y1622-01A0	17	420190
707-36-70270	Y1622-01A0	18	420190
707-44-70110	Y1622-01A0	19	420190
07156-00710	Y1622-01A0	20	420190
707-67-30030	Y1622-01A0	21	420190
07040-11007	Y1622-01A0	22	420190
07002-11023	Y1622-01A0	23	420190
02896-11012	Y1622-01A0	24	420190
707-99-14770	Y1622-01A0	K	420190
419-18-31201	Y1651-01A0	1	420200
UC4020725866	Y1651-01A0	1	420200
UC4020725967	Y1651-01A0	2	420200
UC1100701488	Y1651-01A0	3	420200
UC4100105483	Y1651-01A0	4	420200
UC1700834159	Y1651-01A0	5	420200
UC1708316622	Y1651-01A0	6	420200
UC1700870191	Y1651-01A0	7	420200
UC1090877815	Y1651-01A0	8	420200
UC4100105483	Y1651-01A0	9	420200
UC4704468625	Y1651-01A0	10	420200
UC1701524596	Y1651-01A0	11	420200
419-18-41200	Y1651-01A0A	1	420210
UC4020725866	Y1651-01A0A	1	420210
UC4020725967	Y1651-01A0A	2	420210
UC1100701488	Y1651-01A0A	3	420210
UC4100105483	Y1651-01A0A	4	420210
UC1303026124	Y1651-01A0A	4	420210
UC1700834159	Y1651-01A0A	5	420210
UC1708316622	Y1651-01A0A	6	420210
UC1700870191	Y1651-01A0A	7	420210
UC1090877815	Y1651-01A0A	8	420210
UC4704468625	Y1651-01A0A	9	420210
UC1701524596	Y1651-01A0A	10	420210
419-18-31301	Y1651-01A1	1	420220
UC4020725866	Y1651-01A1	1	420220
UC4020753421	Y1651-01A1	2	420220
UC1100701488	Y1651-01A1	3	420220
UC4100105483	Y1651-01A1	4	420220
UC1700834159	Y1651-01A1	5	420220
UC1708316622	Y1651-01A1	6	420220
UC1700870191	Y1651-01A1	7	420220
UC1090877815	Y1651-01A1	8	420220
UC4100105483	Y1651-01A1	9	420220
UC4704468625	Y1651-01A1	10	420220
UC1701524596	Y1651-01A1	11	420220
419-18-41300	Y1651-01A1A	1	420230
UC4020725866	Y1651-01A1A	1	420230
UCR902121764	Y1651-01A1A	2	420230

PARTS Nº	FIG. Nº	INDEX	PAGE
UC1100701488	Y1651-01A1A	3	420230
UC4100105483	Y1651-01A1A	4	420230
UC1303026124	Y1651-01A1A	4	420230
UC1700834159	Y1651-01A1A	5	420230
UC1708316622	Y1651-01A1A	6	420230
UC1700870191	Y1651-01A1A	7	420230
UC1090877815	Y1651-01A1A	8	420230
UC4704468625	Y1651-01A1A	9	420230
UC1701524596	Y1651-01A1A	10	420230
419-18-31201	Y1651-02A0	1	420240
419-18-31301	Y1651-02A0	1	420240
UC4020725866	Y1651-02A0	1	420240
UC4096038857	Y1651-02A0	1	420240
419-18-41200	Y1651-02A0A	1	420250
419-18-41300	Y1651-02A0A	1	420250
UC4020725866	Y1651-02A0A	1	420250
UC4096038857	Y1651-02A0A	1	420250
419-18-31201	Y1651-03A0	1	420260
419-18-31301	Y1651-03A0	1	420260
UC4096038857	Y1651-03A0	1	420260
UC1096506894	Y1651-03A0	1	420260
UC1099217899	Y1651-03A0	2	420260
UC1099216044	Y1651-03A0	3	420260
UC4020366779	Y1651-03A0	4	420260
UC1099215775	Y1651-03A0	5	420260
UC1099215784	Y1651-03A0	5	420260
UC1099215793	Y1651-03A0	5	420260
UC1099215803	Y1651-03A0	5	420260
UC1099215812	Y1651-03A0	5	420260
UC1099215821	Y1651-03A0	5	420260
UC1099215839	Y1651-03A0	6	420260
UC1020366442	Y1651-03A0	7	420260
UC1708311094	Y1651-03A0	8	420260
419-18-41200	Y1651-03A0A	1	420270
419-18-41300	Y1651-03A0A	1	420270
UC4096038857	Y1651-03A0A	1	420270
UC1096506894	Y1651-03A0A	1	420270
UC1099217899	Y1651-03A0A	2	420270
UC1099216044	Y1651-03A0A	3	420270
UC4020366779	Y1651-03A0A	4	420270
UC1099215775	Y1651-03A0A	5	420270
UC1099215784	Y1651-03A0A	5	420270
UC1099215793	Y1651-03A0A	5	420270
UC1099215803	Y1651-03A0A	5	420270
UC1099215812	Y1651-03A0A	5	420270
UC1099215821	Y1651-03A0A	5	420270
UC1099215839	Y1651-03A0A	6	420270
UC1020366442	Y1651-03A0A	7	420270
UC1708311094	Y1651-03A0A	8	420270
419-18-31201	Y1651-04A0	1	420280
UC4020725967	Y1651-04A0	1	420280
UC4020572277	Y1651-04A0	1	420280
UC4096037689	Y1651-04A0	2	420280
UC1099214644	Y1651-04A0	3	420280
UC1099214369	Y1651-04A0	4	420280
UC1094220213	Y1651-04A0	5	420280
UC1096522034	Y1651-04A0	6	420280
UC1704450168	Y1651-04A0	7	420280
UC1020753442	Y1651-04A0	8	420280
UC1704266624	Y1651-04A0	9	420280
UC1704127565	Y1651-04A0	10	420280
UC1301632002	Y1651-04A0	11	420280
UC1300020004	Y1651-04A0	12	420280
UC1300028008	Y1651-04A0	13	420280
UC1300032007	Y1651-04A0	14	420280
UC1026023224	Y1651-04A0	15	420280
UC1098310576	Y1651-04A0	16	420280
UC1708321459	Y1651-04A0	17	420280
UC1700845425	Y1651-04A0	18	420280
UC1098313189	Y1651-04A0	19	420280
UC1701570407	Y1651-04A0	20	420280
419-18-41200	Y1651-04A0A	1	420290
UC4020725967	Y1651-04A0A	1	420290
UC4020572277	Y1651-04A0A	1	420290
UC4096037689	Y1651-04A0A	2	420290
UC1099214644	Y1651-04A0A	3	420290
UC1099214369	Y1651-04A0A	4	420290
UC1094220213	Y1651-04A0A	5	420290
UC1096522034	Y1651-04A0A	6	420290
UC1704450168	Y1651-04A0A	7	420290
UC1020753442	Y1651-04A0A	8	420290
UC1704266624	Y1651-04A0A	9	420290
UC1704127565	Y1651-04A0A	10	420290
UC1301632002	Y1651-04A0A	11	420290
UC1300020004	Y1651-04A0A	12	420290
UC1300028008	Y1651-04A0A	13	420290
UC1300032007	Y1651-04A0A	14	420290
UC1026023224	Y1651-04A0A	15	420290
UC1098310576	Y1651-04A0A	16	420290
UC1708321459	Y1651-04A0A	17	420290
UC1700845425	Y1651-04A0A	18	420290
UC1098313189	Y1651-04A0A	19	420290
UCR902121738	Y1651-04A0A	20	420290
UCR902115772	Y1651-04A0A	20	420290
UCR902602296	Y1651-04A0A	20	420290
419-18-31301	Y1651-04A1	1	420300
UC4020753421	Y1651-04A1	1	420300
UC4020753403	Y1651-04A1	1	420300
UC4096037634	Y1651-04A1	2	420300
UC1099214644	Y1651-04A1	3	420300
UC1099214369	Y1651-04A1	4	420300
UC1094220213	Y1651-04A1	5	420300
UC1096522034	Y1651-04A1	6	420300
UC1704127565	Y1651-04A1	10	420300
UC1704266624	Y1651-04A1	9	420300
UC1704450168	Y1651-04A1	11	420300
UC1020753442	Y1651-04A1	8	420300
UC1300020004	Y1651-04A1	12	420300
UC1300028008	Y1651-04A1	13	420300
UC1300032007	Y1651-04A1	14	420300
UC1026023224	Y1651-04A1	15	420300
UC1098310576	Y1651-04A1	16	420300
UC1708321459	Y1651-04A1	17	420300
UC1700845425	Y1651-04A1	18	420300
UC1098313189	Y1651-04A1	19	420300
UC1701570407	Y1651-04A1	20	420300
419-18-41300	Y1651-04A1A	1	420310
UC4020753421	Y1651-04A1A	1	420310
UC4020753403	Y1651-04A1A	1	420310
UC4096037634	Y1651-04A1A	2	420310
UC1099214644	Y1651-04A1A	3	420310
UC1099214369	Y1651-04A1A	4	420310
UC1094220213	Y1651-04A1A	5	420310
UC1096522034	Y1651-04A1A	6	420310
UC1704127565	Y1651-04A1A	10	420310
UC1704266624	Y1651-04A1A	9	420310
UC1704450168	Y1651-04A1A	7	420310
UC1020753442	Y1651-04A1A	8	420310
UC1300020004	Y1651-04A1A	12	420310
UC1300028008	Y1651-04A1A	13	420310
UC1300032007	Y1651-04A1A	14	420310
UC1026023224	Y1651-04A1A	15	420310
UC1098310576	Y1651-04A1A	16	420310
UC1708321459	Y1651-04A1A	17	420310
UC1700845425	Y1651-04A1A	18	420310
UC1098313189	Y1651-04A1A	19	420310
UCR902121738	Y1651-04A1A	20	420310
UCR902115772	Y1651-04A1A	20	420310
UCR902602296	Y1651-04A1A	20	420310
419-18-31201	Y1651-05A0	1	420320
UC4020572277	Y1651-05A0	1	420320
UC1020389463	Y1651-05A0	1	420320
UC1704122469	Y1651-05A0	2	420320
UC1720367765	Y1651-05A0	3	420320
UC1706511191	Y1651-05A0	4	420320
UC1709213515	Y1651-05A0	5	420320
UC1094129889	Y1651-05A0	6	420320
UC1709214215	Y1651-05A0	7	420320

PARTS Nº	FIG. Nº	INDEX	PAGE
UC1094324452	Y1651-05A0	8	420320
UC1706511173	Y1651-05A0	9	420320
UC1300211008	Y1651-05A0	10	420320
UC1301571008	Y1651-05A0	11	420320
UC1701539305	Y1651-05A0	12	420320
UC1700833817	Y1651-05A0	13	420320
UC1302086116	Y1651-05A0	14	420320
UC1700871653	Y1651-05A0	15	420320
UC1701524257	Y1651-05A0	16	420320
UC1701538687	Y1651-05A0	17	420320
UC1701538807	Y1651-05A0	18	420320
UC1026017421	Y1651-05A0	19	420320
419-18-41200	Y1651-05A0A	1	420330
UC4020572277	Y1651-05A0A	1	420330
UC1020389463	Y1651-05A0A	1	420330
UC1704122469	Y1651-05A0A	2	420330
UC1720367765	Y1651-05A0A	3	420330
UC1706511191	Y1651-05A0A	4	420330
UC1709213515	Y1651-05A0A	5	420330
UC1094129889	Y1651-05A0A	6	420330
UC1709214215	Y1651-05A0A	7	420330
UC1094324452	Y1651-05A0A	8	420330
UC1706511173	Y1651-05A0A	9	420330
UC1026026416	Y1651-05A0A	10	420330
UC1301571008	Y1651-05A0A	11	420330
UC1701539305	Y1651-05A0A	12	420330
UC1700833817	Y1651-05A0A	13	420330
UC1302086116	Y1651-05A0A	14	420330
UC1700871653	Y1651-05A0A	15	420330
UC1701524257	Y1651-05A0A	16	420330
UC1701538687	Y1651-05A0A	17	420330
UC1701538807	Y1651-05A0A	18	420330
UC1026026416	Y1651-05A0A	19	420330
419-18-31301	Y1651-05A1	1	420340
UC4020753403	Y1651-05A1	1	420340
UC1020772287	Y1651-05A1	1	420340
UC1094326623	Y1651-05A1	2	420340
UC1020069563	Y1651-05A1	3	420340
UC1706511191	Y1651-05A1	4	420340
UC1709213395	Y1651-05A1	5	420340
UC1709214196	Y1651-05A1	6	420340
UC1706511173	Y1651-05A1	7	420340
UC1020451292	Y1651-05A1	8	420340
UC1096501963	Y1651-05A1	9	420340
UC1020450648	Y1651-05A1	10	420340
UC1301571008	Y1651-05A1	11	420340
UC1700833817	Y1651-05A1	12	420340
UC1302086116	Y1651-05A1	13	420340
UC1700877569	Y1651-05A1	14	420340
UC1701524257	Y1651-05A1	15	420340
UC1701538687	Y1651-05A1	16	420340
UC1300211008	Y1651-05A1	17	420340
UC4020757708	Y1651-05A1	18	420340
419-18-41300	Y1651-05A1A	1	420350
UC4020753403	Y1651-05A1A	1	420350
UC1020772287	Y1651-05A1A	1	420350
UC1094326623	Y1651-05A1A	2	420350
UC1020069563	Y1651-05A1A	3	420350
UC1706511191	Y1651-05A1A	4	420350
UC1709213395	Y1651-05A1A	5	420350
UC1709214196	Y1651-05A1A	6	420350
UC1706511173	Y1651-05A1A	7	420350
UC1020451292	Y1651-05A1A	8	420350
UC1020450648	Y1651-05A1A	10	420350
UC1301571008	Y1651-05A1A	11	420350
UC1700833817	Y1651-05A1A	12	420350
UC1302086116	Y1651-05A1A	13	420350
UC1700877569	Y1651-05A1A	14	420350
UC1701524257	Y1651-05A1A	15	420350
UC1701538687	Y1651-05A1A	16	420340
UC1300211008	Y1651-05A1	17	420340
UC4020757708	Y1651-05A1	18	420340
419-18-41300	Y1651-06A0	1	420360
UC4096037689	Y1651-06A0	1	420360
UC1094459907	Y1651-06A0	1	420360
UC1700832061	Y1651-06A0	2	420360
UC1300384005	Y1651-06A0	3	420360
UC1701539305	Y1651-06A0	4	420360
419-18-41200	Y1651-06A0A	1	420370
UC4096037689	Y1651-06A0A	1	420370
UC1094459907	Y1651-06A0A	1	420370
UC1098315929	Y1651-06A0A	2	420370
UC1300384005	Y1651-06A0A	3	420370
UC1701539305	Y1651-06A0A	4	420370
419-18-31301	Y1651-06A1	1	420380
UC4096037634	Y1651-06A1	1	420380
UC4020028468	Y1651-06A1	1	420380
UC4704466252	Y1651-06A1	2	420380
UC4704475917	Y1651-06A1	3	420380
419-18-41300	Y1651-06A1A	1	420390
UCR902115809	Y1651-06A1A	1	420390
UCR902115773	Y1651-06A1A	1	420390
UC1704258687	Y1651-06A1A	2	420390
UC1704196974	Y1651-06A1A	3	420390
UC1704002631	Y1651-06A1A	4	420390
UC1704002649	Y1651-06A1A	5	420390
419-18-31301	Y1651-07A1	1	420400
UC4020028468	Y1651-07A1	1	420400
UC1704497579	Y1651-07A1	1	420400
UC1720001575	Y1651-07A1	2	420400
UC1704302344	Y1651-07A1	3	420400
UC1704171113	Y1651-07A1	4	420400
UC1704178462	Y1651-07A1	5	420400
UC1704171122	Y1651-07A1	6	420400
UC1720119218	Y1651-07A1	7	420400
UC1704178489	Y1651-07A1	8	420400
UC1704002631	Y1651-07A1	9	420400
UC1704002649	Y1651-07A1	10	420400
UC1301616009	Y1651-07A1	11	420400
UC1300156002	Y1651-07A1	12	420400
UC1300152009	Y1651-07A1	13	420400
UC1300384005	Y1651-07A1	14	420400
UC1701530124	Y1651-07A1	15	420400
UC1701539305	Y1651-07A1	16	420400
UC1701570791	Y1651-07A1	17	420400
UC1701579651	Y1651-07A1	17	420400
UC1701579669	Y1651-07A1	17	420400
419-18-41300	Y1651-07A1A	1	420410
UCR902115773	Y1651-07A1A	1	420410
UCR902115700	Y1651-07A1A	1	420410
UC1720001575	Y1651-07A1A	2	420410
UC1704302344	Y1651-07A1A	3	420410
UCR902115717	Y1651-07A1A	4	420410
UCR902115716	Y1651-07A1A	5	420410
UC1704171122	Y1651-07A1A	6	420410
UC1720119218	Y1651-07A1A	7	420410
UC1704178489	Y1651-07A1A	8	420410
UC1301616009	Y1651-07A1A	9	420410
UC1098308629	Y1651-07A1A	10	420410
UC1098308601	Y1651-07A1A	11	420410
UC1300384005	Y1651-07A1A	12	420410
UC1701530124	Y1651-07A1A	13	420410
UC1701539305	Y1651-07A1A	14	420410
UC1701570791	Y1651-07A1A	15	420410
UC1701579651	Y1651-07A1A	17	420410
UC1701579669	Y1651-07A1A	17	420410
700-92-39000	Y1662-01A0	1	420420
700-92-00110	Y1662-01A0	1	420420
700-22-11370	Y1662-01A0	2	420420
07002-12434	Y1662-01A0	3	420420
709-94-91130	Y1662-01A0	6	420420
709-94-92530	Y1662-01A0	7	420420
709-94-92540	Y1662-01A0	8	420420
709-94-91170	Y1662-01A0	9	420420
709-94-91120	Y1662-01A0	10	420420
01252-60820	Y1662-01A0	11	420420
709-94-91210	Y1662-01A0	12	420420
700-92-11750	Y1662-01A0	13	420420
07430-71380	Y1662-01A0	14	420420

PARTS Nº	FIG. Nº	INDEX	PAGE
700-22-11910	Y1662-01A0	15	420420
01643-30623	Y1662-01A0	16	420420
700-92-11730	Y1662-01A0	17	420420
700-92-11910	Y1662-01A0	18	420420
700-92-11740	Y1662-01A0	19	420420
700-92-11880	Y1662-01A0	20	420420
700-92-11890	Y1662-01A0	21	420420
709-94-92560	Y1662-01A0	22	420420
700-92-11760	Y1662-01A0	23	420420
709-94-92510	Y1662-01A0	24	420420
07000-13038	Y1662-01A0	25	420420
700-93-11461	Y1662-01A0	26	420420
700-93-11471	Y1662-01A0	27	420420
700-93-11481	Y1662-01A0	28	420420
07002-13634	Y1662-01A0	29	420420
07041-13612	Y1662-01A0	30	420420
07002-13634	Y1662-01A0	31	420420
700-93-12111	Y1662-01A0	32	420420
07000-13035	Y1662-01A0	33	420420
01010-81025	Y1662-01A0	34	420420
700-92-11870	Y1662-01A0	35	420420
723-26-15230	Y1662-01A0	36	420420
07002-12434	Y1662-01A0	37	420420
01011-81235	Y1662-01A0	38	420420
01643-51232	Y1662-01A0	39	420420
700-92-39000	Y1662-02A0	1	420430
709-90-54501	Y1662-02A0	1	420430
700-93-11320	Y1662-02A0	2	420430
700-93-11330	Y1662-02A0	3	420430
07002-13634	Y1662-02A0	4	420430
709-10-62101	Y1662-02A0	5	420430
07002-03634	Y1662-02A0	6	420430
723-60-23800	Y1662-02A0	7	420430
07002-13634	Y1662-02A0	8	420430
700-82-84001	Y1662-11A0	1	420440
709-82-00161	Y1662-11A0	1	420440
709-82-10900	Y1662-11A0	1	420440
07000-03030	Y1662-11A0	3	420440
07000-13050	Y1662-11A0	4	420440
700-82-11212	Y1662-11A0	5	420440
700-82-11470	Y1662-11A0	6	420440
700-22-11370	Y1662-11A0	7	420440
07002-12434	Y1662-11A0	8	420440
700-42-31460	Y1662-11A0	9	420440
700-90-51320	Y1662-11A0	10	420440
700-84-11320	Y1662-11A0	11	420440
07002-13034	Y1662-11A0	12	420440
700-84-13781	Y1662-11A0	15	420440
700-84-15740	Y1662-11A0	16	420440
01252-30616	Y1662-11A0	17	420440
07040-13316	Y1662-11A0	18	420440
07002-03334	Y1662-11A0	19	420440
700-84-12131	Y1662-11A0	20	420440
07002-03334	Y1662-11A0	21	420440
07000-13022	Y1662-11A0	22	420440
700-84-12510	Y1662-11A0	23	420440
700-84-11240	Y1662-11A0	24	420440
700-82-84001	Y1662-12A0	1	420450
700-89-51000	Y1662-12A0	1	420450
700-13-31161	Y1662-12A0	2	420450
700-80-51190	Y1662-12A0	3	420450
07002-03334	Y1662-12A0	4	420450
700-82-62001	Y1662-12A0	5	420450
07002-03034	Y1662-12A0	6	420450
709-93-12700	Y1663-01A0	1	420460
700-92-00110	Y1663-01A0	1	420460
700-22-11370	Y1663-01A0	2	420460
07002-12434	Y1663-01A0	3	420460
709-94-91130	Y1663-01A0	6	420460
709-94-92530	Y1663-01A0	7	420460
709-94-92540	Y1663-01A0	8	420460
709-94-91170	Y1663-01A0	9	420460
709-94-91120	Y1663-01A0	10	420460
01252-60820	Y1663-01A0	11	420460
709-94-91210	Y1663-01A0	12	420460
700-92-11750	Y1663-01A0	13	420460
07430-71380	Y1663-01A0	14	420460
700-22-11910	Y1663-01A0	15	420460
01643-30623	Y1663-01A0	16	420460
700-92-11730	Y1663-01A0	17	420460
700-92-11910	Y1663-01A0	18	420460
700-92-11740	Y1663-01A0	19	420460
700-92-11880	Y1663-01A0	20	420460
700-92-11890	Y1663-01A0	21	420460
709-94-92560	Y1663-01A0	22	420460
700-92-11760	Y1663-01A0	23	420460
709-94-92510	Y1663-01A0	24	420460
07000-13038	Y1663-01A0	25	420460
700-93-11461	Y1663-01A0	26	420460
700-93-11471	Y1663-01A0	27	420460
700-93-11481	Y1663-01A0	28	420460
07002-13634	Y1663-01A0	29	420460
07041-13612	Y1663-01A0	30	420460
07002-13634	Y1663-01A0	31	420460
700-93-12111	Y1663-01A0	32	420460
07000-13035	Y1663-01A0	33	420460
01010-81025	Y1663-01A0	34	420460
700-92-11870	Y1663-01A0	35	420460
723-26-15230	Y1663-01A0	36	420460
07002-12434	Y1663-01A0	37	420460
01011-81235	Y1663-01A0	38	420460
01643-51232	Y1663-01A0	39	420460
709-93-12700	Y1663-02A0	1	420470
709-91-00110	Y1663-02A0	1	420470
709-91-00040	Y1663-02A0	1	420470
07000-13038	Y1663-02A0	2	420470
700-93-11461	Y1663-02A0	3	420470
700-93-11471	Y1663-02A0	4	420470
700-93-11481	Y1663-02A0	5	420470
07002-13634	Y1663-02A0	6	420470
07430-71380	Y1663-02A0	8	420470
01252-30820	Y1663-02A0	9	420470
709-94-91210	Y1663-02A0	10	420470
709-94-91130	Y1663-02A0	11	420470
709-94-91120	Y1663-02A0	12	420470
709-10-62101	Y1663-02A0	13	420470
07002-03634	Y1663-02A0	14	420470
709-93-12700	Y1663-03A0	1	420480
709-90-54501	Y1663-03A0	1	420480
700-93-11320	Y1663-03A0	2	420480
700-93-11330	Y1663-03A0	3	420480
07002-13634	Y1663-03A0	4	420480
709-10-62101	Y1663-03A0	5	420480
07002-03634	Y1663-03A0	6	420480
723-60-23800	Y1663-03A0	7	420480
07002-13634	Y1663-03A0	8	420480
702-16-03812	Y1670-01A1	1	420490
702-16-54641	Y1670-01A1	2	420490
01252-60625	Y1670-01A1	3	420490
702-16-54650	Y1670-01A1	4	420490
702-16-54920	Y1670-01A1	5	420490
08034-00310	Y1670-01A1	6	420490
08034-20310	Y1670-01A1	7	420490
08192-12810	Y1670-01A1	8	420490
702-16-03851	Y1670-01A1A	1	420500
702-16-58820	Y1670-01A1A	2	420500
07000-02070	Y1670-01A1A	3	420500
08034-00310	Y1670-01A1A	4	420500
08034-20310	Y1670-01A1A	5	420500
08192-12810	Y1670-01A1A	6	420500
702-16-03370	Y1670-01A2	1	420510
702-16-51140	Y1670-01A2	3	420510
702-16-54670	Y1670-01A2	3	420510
702-16-54550	Y1670-01A2	4	420510
702-16-54571	Y1670-01A2	5	420510
702-16-58560	Y1670-01A2	6	420510
702-16-53170	Y1670-01A2	7	420510
702-16-57430	Y1670-01A2	8	420510
702-16-54580	Y1670-01A2	9	420510
702-16-54590	Y1670-01A2	10	420510
702-16-54641	Y1670-01A2	14	420510
01252-30625	Y1670-01A2	15	420510
702-16-54660	Y1670-01A2	16	420510
702-16-54650	Y1670-01A2	17	420510
702-16-54880	Y1670-01A2	18	420510
702-21-04370	Y1679-01A0	1	420520
702-21-37220	Y1679-01A0	3	420520
702-21-37260	Y1679-01A0	5	420520
07000-B3032	Y1679-01A0	6	420520
01252-61025	Y1679-01A0	7	420520
702-21-37251	Y1679-01A0	8	420520
07002-61423	Y1679-01A0	9	420520
07000-B1007	Y1679-01A0	10	420520
706-73-72420	Y1679-01A0	11	420520
706-73-72440	Y1679-01A0	12	420520
01252-60550	Y1679-01A0	13	420520
702-21-04390	Y1679-01A0	14	420520
07000-B2020	Y1679-01A0	15	420520
07001-02020	Y1679-01A0	16	420520
07000-B2022	Y1679-01A0	17	420520
07002-63034	Y1679-01A0	18	420520
702-21-04380	Y1679-01A0	19	420520
07000-B1009	Y1679-01A0	20	420520
419-62-31911	Y1682-01A0	1	420530
UC4100699566	Y1682-01A0	1	420530
UC4100698141	Y1682-01A0	2	420530
UC1301526008	Y1682-01A0	3	420530
419-62-31911	Y1682-02A0	1	420540
UC4100699566	Y1682-02A0	1	420540
UC4803445499	Y1682-02A0	2	420540
UC1180790006	Y1682-02A0	3	420540
UC1198273603	Y1682-02A0	4	420540
UC1301011001	Y1682-02A0	7	420540
UC1301190003	Y1682-02A0	8	420540
UC1301169009	Y1682-02A0	9	420540
UC1100081115	Y1682-02A0	10	420540
UC1303024274	Y1682-02A0	11	420540
419-62-31911	Y1682-03A0	1	420550
UC4100698141	Y1682-03A0	1	420550
UC1100693534	Y1682-03A0	3	420550
UC1100393552	Y1682-03A0	4	420550
UC1100693561	Y1682-03A0	5	420550
UC1701532717	Y1682-03A0	6	420550
UC1801721079	Y1682-03A0	7	420550
UC1100693589	Y1682-03A0	8	420550
UC1198253902	Y1682-03A0	9	420550
UC1100693579	Y1682-03A0	11	420550
UC1808107819	Y1682-03A0	12	420550
UC1100693617	Y1682-03A0	13	420550
UC1100693608	Y1682-03A0	14	420550
UC1198273603	Y1682-03A0	15	420550
UC1301891009	Y1682-03A0	16	420550
UC1300022009	Y1682-03A0	20	420550
UC1300026002	Y1682-03A0	21	420550
UC1301169009	Y1682-03A0	22	420550
UC1301220003	Y1682-03A0	23	420550
UC1800011702	Y1682-03A0	24	420550
419-62-31911	Y1682-04A0	1	420560
UC4803445499	Y1682-04A0	1	420560
UC1006973554	Y1682-04A0	1	420560
UC1001811891	Y1682-04A0	2	420560
UC1001919353	Y1682-04A0	3	420560
UC1000131671	Y1682-04A0	4	420560
UC1000090992	Y1682-04A0	5	420560
UC1800131659	Y1682-04A0	6	420560
425-07-21111	Y1979-01A0	1	420570
ND445800-9182	Y1979-01A0	1	420570
ND116300-4631	Y1979-01A0	2	420570
ND90930-06141	Y1979-01A0	3	420570
425-07-21111	Y1979-02A0	1	420580
ND445800-9182	Y1979-02A0	1	420580
ND245420-4202	Y1979-02A0	1	420580
ND447600-2340	Y1979-02A0	2	420580
ND077500-3620	Y1979-02A0	3	420580
ND246690-2840	Y1979-02A0	4	420580
ND447500-1390	Y1979-02A0	5	420580
ND446870-2320	Y1979-02A0	6	420580
ND949142-0030	Y1979-02A0	6	420580
ND949142-0010	Y1979-02A0	6	420580
ND949046-2150	Y1979-02A0	7	420580
ND116730-0520	Y1979-02A0	8	420580
ND116730-0530	Y1979-02A0	9	420580
ND245420-5992	Y1979-02A0	10	420580
ND116452-0562	Y1979-02A0	11	420580
ND949001-1730	Y1979-02A0	12	420580
ND116410-9680	Y1979-02A0	13	420580
ND116427-5540	Y1979-02A0	14	420580
ND7052-200600	Y1979-02A0	15	420580
ND949351-0860	Y1979-02A0	16	420580
ND113600-9260	Y1979-02A0	17	420580
ND116427-2320	Y1979-02A0	18	420580
ND017231-1400	Y1979-02A0	19	420580
ND246440-5200	Y1979-02A0	20	420580
ND7009-040050	Y1979-02A0	21	420580
ND017732-3051	Y1979-02A0	22	420580
ND91370-03081	Y1979-02A0	23	420580
ND017732-3041	Y1979-02A0	24	420580
ND017732-3060	Y1979-02A0	25	420580
17M-911-3330	Y1979-02A0	26	420580
ND116662-3780	Y1979-02A0	27	420580
17M-911-3290	Y1979-02A0	28	420580
ND116662-0590	Y1979-02A0	29	420580
ND063700-6580	Y1979-02A0	30	420580
195-Z11-6280	Y1979-02A0	31	420580
ND90930-06141	Y1979-02A0	32	420580
ND146668-6710	Y1979-02A0	33	420580
ND146984-4750	Y1979-02A0	34	420580
ND146642-7930	Y1979-02A0	35	420580
ND7009-010050	Y1979-02A0	36	420580
ND246690-6740	Y1979-02A0	37	420580
ND017773-0140	Y1979-02A0	38	420580
ND017773-0180	Y1979-02A0	39	420580
ND949008-0780	Y1979-02A0	40	420580
ND017660-3490	Y1979-02A0	41	420580
ND90930-05121	Y1979-02A0	42	420580
ND90930-05161	Y1979-02A0	43	420580
425-07-21111	Y1979-03A0	1	420590
ND116300-4631	Y1979-03A0	1	420590
ND116251-9193	Y1979-03A0	1	420590
ND146638-9460	Y1979-03A0	2	420590
ND116290-0790	Y1979-03A0	3	420590
ND949001-2690	Y1979-03A0	4	420590
ND146622-6880	Y1979-03A0	5	420590
ND116340-2360	Y1979-03A0	6	420590
ND116221-0960	Y1979-03A0	6	420590
ND017231-2370	Y1979-03A0	6	420590
ND116471-7271	Y1979-03A0	7	420590
ND949047-2370	Y1979-03A0	8	420590
ND90930-06141	Y1979-03A0	9	420590
ND146810-9062	Y1979-03A0	10	420590
ND90930-04121	Y1979-03A0	11	420590
ND146651-1840	Y1979-03A0	12	420590
195-Z11-6150	Y1979-03A0	13	420590
421-07-31260	Y1979-04A0	1	420600
ND017321-2132	Y1979-04A0	1	420600
ND116471-7180	Y1979-04A0	2	420600
ND90930-06161	Y1979-04A0	3	420600
ND116471-7190	Y1979-04A0	4	420600
ND017321-3071	Y1979-04A0	5	420600
ND90900-04161	Y1979-04A0	6	420600
ND116730-0710	Y1979-04A0	7	420600
ND017732-4880	Y1979-04A0	8	420600
ND91370-03081	Y1979-04A0	9	420600
ND063700-5731	Y1979-04A0	10	420600
ND116471-6662	Y1979-04A0	11	420600
ND017773-0190	Y1979-04A0	12	420600
ND90940-05101	Y1979-04A0	13	420600
ND116471-6662	Y1979-04A0	14	420600
ND145530-0620	Y1979-04A0	15	420600
ND014520-0990	Y1979-04A0	16	420600

PARTS Nº	FIG. Nº	INDEX	PAGE
ND145530-0630	Y1979-04A0	17	420600
ND91370-06161	Y1979-04A0	18	420600
ND146648-1171	Y1979-04A0	19	420600
ND146637-0480	Y1979-04A0	20	420600
ND017231-0670	Y1979-04A0	21	420600
ND146648-6791	Y1979-04A0	22	420600
ND246634-8580	Y1979-04A0	23	420600
ND246451-0200	Y1979-04A0	24	420600
ND146522-6190	Y1979-04A0	25	420600
ND146984-4030	Y1979-04A0	26	420600
ND90940-05161	Y1979-04A0	27	420600
195-Z11-6280	Y1979-04A0	28	420600
425-07-21152	Y1979-05A0	1	420610
ND145820-9610	Y1979-05A0	1	420610
ND145820-8330	Y1979-05A0	2	420610
ND116530-8560	Y1979-05A0	3	420610
ND116530-8570	Y1979-05A0	4	420610
ND017732-3080	Y1979-05A0	5	420610
ND017732-3090	Y1979-05A0	6	420610
ND017732-3100	Y1979-05A0	7	420610
ND017732-5020	Y1979-05A0	8	420610
ND116662-0640	Y1979-05A0	9	420610
ND949008-0420	Y1979-05A0	10	420610
ND913100-3081	Y1979-05A0	11	420610
ND116632-0171	Y1979-05A0	12	420610
ND063700-7010	Y1979-05A0	13	420610
ND949008-0780	Y1979-05A0	14	420610
ND146625-2630	Y1979-05A0	15	420610
ND246690-2930	Y1979-05A0	16	420610
ND017773-0140	Y1979-05A0	17	420610
ND146522-6181	Y1979-05A0	18	420610
ND909400-5161	Y1979-05A0	19	420610

WA320-5 Wheel Loader
Form No. KEPB001408

©2013 KOMATSU
All Rights Reserved
Printed in Brazil 02-13