RUTHZIL TRATOR COMERCIAL DE PEÇAS LTDA 11 97083-6812 ROLANDO CITRANGULO

FEN02985-00

PARTS BOOK

KOMATSU

WA470-6
Serial No. 91202 and up

SAA6D125E-5D
Serial No. 573024 and up

FOREWORD

When ordering replacement parts, specify the part number, part name, and quantity required, and also specify your machine model code, machine serial number, engine serial number and the service meter reading of which the parts are needed. This Parts Book contains not only standard replacement parts but also optional equipment, tools and field repair service parts.

To order these items, please contact your nearest Komatsu distributor.

NOTE
The illustrations, parts configuration, parts number or parts name in this publication may differ from your machine unit, and these are subject to change without notice for continuous product improvement.
Whenever concerns and questions arise regarding items in this publication and your machine unit or when you order there replacement parts, please consult your nearest Komatsu distributor for the latest information.

This Parts Book contains the information and special codes as follows:

ILLUSTRATION AND PARTS LIST

When you open this Parts Book, you will find an illustration following its figure number (FIG.) Each individual
part in the illustration is given an index number. Following the illustration, the component parts of the unit are listed in the order of the index numbers shown in the illustration. The part number, part name, quantity and applicable serial number are given for each part as a parts list.

FIGURE NUMBER (FIG.)

The figure number (FIG.) is the number which shows the figure of the page. It is not the spare part number.
The numbers are not always continuous.

PARTS LIST

Spare parts information are listed in the parts list page as follows:

Index:

This is the same as the index number in the illustration. The parts are listed in index number order.

Code:

Codes are used in this column and represent as follows:

A1 This part and the part specified in the line immediately above are interchangeable.
A2 The part specified in the line above can be used instead of this part.
A3 This part can be used instead of the part specified in the line immediately above.
A4 The part specified in the description column can be used instead of this part if it is used as a set.
B1 This shows discontinued part. The part specified in the above line is supplied instead.
B2 This shows a discontinued part. The part specified in the description column is supplied instead as a set.

C1 This part cannot be supplied as an individual part. It is supplied as an assembly.
C2 This part is supplied for authorized Komatsu distributors only. It cannot be supplied as an individual part. It is supplied as an assembly.
C3 This indicates a part supplied as semi-finished. It requires additional work before installation.

Part Number:

The number given in the part number column is the part number for the part shown. It is the identification
code used when ordering that part. It is important that there be no mistake in this code number when ordering.

Description:

This gives the name of part that has the part number listed. The mark "･" is put in front of the component part name of an assembly part and the item is entered following the assembly. If a part marked with "･" is a sub assembly, its components are marked with "･･".

Example: Tank Assembly
･Tank
･Cap
･･Packing

Furthermore, the following marks and abbreviations are used in this column.

Kit This indicates kit parts. For kit parts, refer to the section FIELD REPAIR SERVICE PARTS in this Parts Book.
D Diameter
L Length
L.H. Left-hand side
R.H. Right-hand side
T Thickness
W Width

Quantity (Qty):

This specifies the number of pieces used for one machine. However, if a part is included in the assembly and/or component, the quantity per such assembly and/or component is specified.
Code AR (as required) shall be used in the Quantity column if the part cannot be specified numbers requires per machine and/or component. In such case, any number of quantities may be ordered depend on the field service requirement.

Serial Numbers:

Applicable engine serial number is indicated for the engine volume. In the chassis volume, this indicates the machine serial number in which the part is used.
If the serial number is enclosed in parenthesis, it shows that it is the applicable serial number for exclusive use of the equipment of figure number (FIG.)

AVANT-PROPOS

Lorsque vous passez une commande d'une pièce de rechange, vous êtes prié de spécifier le numéro de la pièce, la désignation de la pièce et la quantité requise et d'indiquer également le code du modèle de la machine, le numéro de série de la machine, le numéro de série du moteur et la lecture du compteur de service du véhicule.

Sur le présent catalogue des pièces figurent non seulement les équipements standard, mais également les équipements et accessoires en option. Si vous désirez un équipement ou une pièce quelconque, vous êtes prié de prendre contact avec le concessionnaire Komatsu le plus proche.

Ce catalogue des pièces comprend les informations et codes spéciaux de la manière suivante:

FIGURES ET LISTES DES PIÈCES

Lorsque vous ouvrez le présent catalogue, vous pouvez rechercher les figures en fonction du numéro de figure (FIG.). Chaque pièce individuelle dans la figure est fournie d'un numéro de référence. D'après la figure, les éléments de l'unité sont énumérés dans l'ordre des numéros de référence montrés sur la figure. Le numéro de la pièce, la désignation de la pièce, la quantité et le numéro de série utilisés sont indiqués pour chaque pièce comme liste des pièces.

NUMÉRO DE FIGURE (FIG.)

Le numéro de figure (FIG.) est un numéro qui permet d'identifier une figure sur une page. Il ne représente pas le numéro de la pièce de rechange. Les numéros ne sont pas toujours séquentiels.

LISTE DES PIÈCES DE RECHANGE

Les informations des pièces de rechange sont données dans la page de la liste des pièces comme ci-après:

Numéro de référence (Index):

Les numéros de référence correspondent aux numéros de référence notés sur la figure et sont énumérés dans l'ordre des numéros de référence.

Codification (Code):

Les codes sont utilisés dans cette colonne et représentent comme ci-après:

A1 Cette pièce et la pièce qui figure sur la ligne juste au-dessus sont interchangeables.

A2 La pièce indiquée sur la ligne au-dessus peut être utilisée au lieu de cette pièce.

A3 Cette pièce peut être utilisée au lieu de la pièce indiquée sur la ligne juste au-dessus.

A4 La pièce indiquée dans la colonne de description peut être utilisée au lieu de cette pièce si elle est utilisée comme ensemble.

B1 Ceci montre la pièce dont la production est interrompue. La pièce indiquée dans la ligne au-dessus est fournie à sa place.

B2 Ceci montre la pièce dont la production est interrompue. La pièce indiquée dans la colonne de description est fournie à sa place comme ensemble.

C1 Cette pièce ne peut pas être fournie comme pièce individuelle. Elle est fournie en tant qu'ensemble.

C2 Cette pièce est fournie pour les distributeurs autorisés de Komatsu seulement. Elle ne peut pas être fournie comme pièce individuelle. Elle est fournie en tant qu'ensemble.

C3 Ceci indique une pièce fournie à l'état semi-fini. Ceci exige un travail additionnel avant l'installation.

Numéros de pièce (Part Number):

Les numéros indiqués dans cette colonne correspondent aux numéros des pièces représentées et constituent les codes à spécifier pour toute commande de pièce. Il est important de ne pas faire d'erreur avec ce code au moment de la commande.

Description (Description):

Ceci indique le nom de la pièce qui montre le numéro de la pièce énumérée. La marque "·" est placée devant le nom de la pièce du composant d'une pièce d'ensemble et l'item est introduit suivant l'ensemble. Si une pièce marquée avec "·" est un sous-ensemble, ses composants sont marqués avec "· ·".
Exemple: Tank Assembly (Ensemble de réservoir)
· Tank
· Cap
· · Packing

En outre, les marques et abréviations suivantes sont utilisées dans cette colonne.

Kit Ceci indique les pièces de kit. Pour les pièces de kit, se référer à la Section FIELD REPAIR SERVICE PARTS de ce Catalogue des Pièces.
D Diamètre
L Longueur
L.H. Côté gauche
R.H. Côté droit
T Épaisseur
W Largeur

Quantité (Qty):

Ceci spécifie le nombre de pièces nécessaires pour l'équipement en question. S'il s'agit de pièces comprises dans un ensemble et/ou composant, et la quantité indiquée est le nombre de pièces nécessaires pour l'ensemble et/ou le composant en question.
Le code AR (comme requis) sera utilisé dans la colonne de Quantité si la pièce ne peut pas se présenter en nombres indiqués comme requis par machine et/ou composant. Dans ce cas, tout nombre de quantités peut être commandé selon la condition de service de champ.

Numéros de série (Serial Numbers):

Le numéro de série du moteur applicable est indiqué pour le volume du moteur. Dans le volume de la carrosserie, ceci indique le numéro de série de l'équipement sur lequel la pièce est utilisée.

Si le numéro de série est placé entre parenthèses, cela signifie qu'il s'agit d'un numéro de série destiné exclusivement à l'utilisation de l'équipement mentionné dans le numéro de figure (FIG.).

PREFAZIONE

Quando fate un ordinazione di una parte di ricambio, siete pregati di precisare il numero della parte, la designazione della parte e la quantità necessaria ed indicare anche il codice del modello della macchina, il numero di serie della macchina, il numero di serie del motore e la lettura dell'indicatore di servizio del veicolo.

Sul presente catalogo delle parti appaiono non solo le attrezzature standard, ma anche le attrezzature ed accessori in opzione. Se desiderate un'attrezzatura o una parte qualunque, siete pregati di prendere contatto con il concessionario Komatsu più vicino.

Questo catalogo delle parti comprende le informazioni ed i codici speciali nel modo seguente:

ILLUSTRAZIONI ED ELENCO DELLE PARTI

Quando aprite il presente catalogo, troverete una figura secondo il suo numero di figura (FIG.). Ogni parte individuale nella figura è fornita di un numero di riferimento. Secondo la figura, gli elementi dell'unità sono enumerati nell'ordine dei numeri di riferimento mostrati sulla figura. Il numero della parte, la designazione della parte, la quantità ed il numero di serie utilizzati sono indicati per ogni parte come elenco delle parti.

NUMERO DI FIGURA (FIG.)

Il numero di figura (FIG.) è il numero che indica la figura della pagina. Non rappresenta il numero della parte di ricambio. I numeri non sono sempre continui.

ELENCO DELLE PARTI DI RICAMBIO

Le informazioni dei pezzi di ricambio sono elencate nella pagina dell'elenco dei pezzi come segue:

Numero di riferimento (Index):

I numeri di riferimento corrispondono ai numeri di riferimento notati sulla figura e sono enumerati nell'ordine dei numeri di riferimento.

Codice (Code):

I codici sono usati in questa colonna e rappresentano come segue:

A1 Questa parte ed la parte specificata nella linea immediatamente sopra sono intercambiabili.

A2 La parte specificata nella linea sopra può essere usata anziché questa parte.

A3 Questa parte può essere usata anziché la parte specificata nella linea immediatamente sopra.

A4 La parte specificata nella colonna di descrizione può essere usata anziché questa parte se è usata come insieme.

B1 Ciò mostra la parte non più in produzione. La parte specificata nella suddetta linea è invece fornita.

B2 Ciò mostra una parte non più in produzione. La parte specificata nella colonna di descrizione è fornita invece come insieme.

C1 Questa parte non può essere fornita come pezzo individuale. È fornita come insieme.

C2 Questa parte è destinata solo ai distributori autorizzati Komatsu. Non può essere fornita come parte individuale. È fornita come insieme.

C3 Ciò indica una parte fornita come semifinito. Richiede un lavoro supplementare prima dell'installazione.

Numeri di parte (Part Number):

I numeri indicati in questa colonna corrispondono ai numeri delle parti rappresentate e costituiscono i codici da precisare per qualsiasi ordinazione di parte. È importante non fare un errore con questo codice al momento dell'ordinazione.

Descrizione (Description):

Ciò dà il nome della parte che presenta il numero di parte elencato. Il contrassegno "·" è messo davanti al nome della parte componente di una parte di gruppo e l'articolo è inserito dopo il gruppo. Se un pezzo segnato con "·" è un sotto-gruppo, i suoi componenti sono segnati con "· ·".

Esempio: Tank Assembly
· Tank
· Cap
· · Packing

Inoltre, i seguenti contrassegni ed abbreviazioni sono usati in questa colonna.

Kit Ciò indica le parti di kit. Per le parti di kit, riferirsi alla sezione PARTI DI RICAMBIO PER SERVIZIO DI RIPARAZIONE IN SEDE in questo Catalogo delle Parti.
D Diametro
L Lunghezza
L.H. Lato a sinistra
R.H. Lato a destra
T Spessore
W Larghezza

Quantità (Qty):

Questo precisa il numero di parti necessarie per l'attrezzatura in questione. Se si tratta di parti comprese in un insieme e/o componente, e la quantità indicata è il numero di parti necessarie per l'insieme e/o il componente in questione.
Il codice AR (come richiesto) sarà utilizzato nella colonna di Quantità se la parte non può presentarsi in numeri indicati come richiesto per macchina e/o componente. In questo caso, qualsiasi numero di quantità può essere ordinato secondo la condizione di servizio di campo.

Numeri di serie (Serial Numbers):

Il numero di serie del motore applicabile è indicato per il volume del motore. Nel volume della carrozzeria, questo indica il numero di serie dell'attrezzatura sulla quale la parte è utilizzata.

Se il numero seriale è racchiuso tra parentesi, indica che è il numero di serie applicabile per uso esclusivo dell'attrezzatura del numero di figura (FIG.)

VORWORT

Bei der Bestellung von Teilen bitte die Teilenummer, die Teilebezeichnung und die Menge des jeweiligen Teils sowie die Modellnummer, die Seriennummer der Maschine, die Seriennummer des Motors und den Stand des Betriebsstundenzählers angeben.

In dieser Ersatzteilliste ist nicht nur das Standardzubehör aufgeführt, sondern auch als Sonderausstattung erhältliche Teile und Einrichtungen. Bestellungen nimmt Ihr zuständiger Komatsu-Händler entgegen.

Die folgenden Informationen und Kodes sind in der Ersatzteilliste enthalten:

Bilder und Ersatzteilliste

Beim Aufschlagen des Ersatzteilkatalogs finden Sie nach der Bildnummer (BILD) geordnete Bilder. Jedes Einzelteil einer Baugruppe ist mit einer Kennzahl versehen. Ausgehend von den Bildern sind die Bauteile der Baugruppe aufgeführt, und zwar geordnet nach den in den Bildern angegebenen Kennzahlen. Jedes Einzelteil wird mit Teilenummer, Teilebezeichnung und entsprechender Seriennummer angegeben.

Bildnummer (BILD)

Mit der Bildnummer (BILD) können Bilder auf einer Seite identifiziert werden. Es handelt sich dabei nicht um die Nummer des Lieferteils. Auch sind die Bilder nicht fortlaufend nummeriert.

Ersatzteilliste

Angaben zu den Ersatzteilen sind auf der Auflistungsseite wie folgt dargestellt::

Kennzahl (Index):

Hierbei handelt es sich um die Kennzahlen aus den Bildern. Die Bauteile sind nach diesen Kennzahlen geordnet aufgeführt.

Kode (Code):

In dieser Spalte werden Kodes mit den folgenden Bedeutungen benutzt:

A1 Dieses Teil ist mit dem in der vorangegangenen Zeile aufgeführten Teil austauschbar.

A2 Das in der vorangegangen Zeile aufgeführte Teil kann anstelle dieses Teils verwendet werden.

A3 Dieses Teil kann anstelle des in der vorangegangenen Zeile aufgeführten Teils verwendet werden.

A4 Anstelle dieses Teils kann das in der Spalte „Beschreibung“ aufgeführte Teil verwendet werden, wenn das Teil zusammen mit anderen Teilen als ein Bauteilsatz verwendet wird.

B1 Dieses Teil kann nicht mehr geliefert werden. Stattdessen wird das in der vorangegangenen Zeile aufgeführte Teil geliefert.

B2 Dieses Teil kann nicht mehr geliefert werden. Stattdessen wird das in der Spalte „Beschreibung“ aufgeführte Teil als ein Bauteilsatz geliefert.

C1 Dieses Teil kann nicht als Einzelteil, sondern nur als Baugruppe geliefert werden.

C2 Dieses Teil wird nur an autorisierte Komatsu-Händler geliefert. Es kann nicht als Einzelteil, sondern nur als Baugruppe geliefert werden.

C3 Hiermit werden Teile gekennzeichnet, die in vorbearbeitetem Zustand geliefert werden und für den Einbau nachbearbeitet werden müssen.

Teilenummer (Part Number):

Die in der Spalte „Teilenummer“ aufgeführte Nummer entspricht der Teilenummer für das betreffende Teil. Diese Nummer dient zur Identifizierung des Teils bei einer Bestellung. Deshalb sollte bei der Bestellung stets auf die genaue Angabe der Teilenummer geachtet werden.

Beschreibung (Description):

Hierunter wird die Bezeichnung des Teils mit der aufgeführten Teilenummer angegeben. Jedes Baugruppen-Bauteil ist mit dem vorangestellten Symbol „·“ gekennzeichnet und wird hinter der entsprechenden Baugruppe aufgeführt. Handelt es sich bei dem mit „·“ gekennzeichneten Bauteil um eine Baugruppe, sind die Bauteile dieser Baugruppe mit „· ·“ gekennzeichnet.
Beispiel: Tank Assembly
· Tank
· Cap
· · Packing

Zusätzlich werden die folgenden Zeichen und Abkürzungen in dieser Spalte verwendet:

Kit Hiermit werden Teile gekennzeichnet, die nur als Satz erhältlich sind. Siehe dazu den Abschnitt „FIELD REPAIR SERVICE PARTS“ dieses Ersatzteilkatalogs.
D Durchmesser
L Länge
L.H. linke Seite
R.H. Rechte Seite
T Dicke
W Breite

Menge (Qty):

Hierunter wird die Anzahl der Bauteile für eine Maschine angegeben. Im Falle einer Baugruppe oder eines Aggregats wird allerdings die Anzahl der Teile pro Baugruppe angegeben.
Der Kode AR (nach Bedarf) wird in dieser Spalte dann benutzt, wenn keine genaue Angabe darüber möglich ist, wie groß der Mengenbedarf pro Maschine und/oder Baugruppe ist. In diesem Fall kann eine beliebige Menge je nach Bedarf bestellt werden.

Serial Numbers (Seriennummern):

Im Ersatzteilkatalog für den Motor versteht man hierunter die Seriennummer des Motors, in den das betreffende Teil eingebaut ist. Im Ersatzteilkatalog für die Maschine versteht man hierunter die Seriennummer der Maschine, in die das entsprechende Teil eingebaut ist.
Wenn die Seriennummer in Klammern angegeben ist, ist diese Seriennummer ausschließlich für das in der Bildnummer (BILD) angegebene Zubehör bestimmt.

INTRODUÇÃO

Ao solicitar uma peça, informe o número, nome e quantidade da peça necessária, bem como o código de modelo da máquina e seu número de série, o número do motor e a leitura do medidor de serviço.

Este catálogo de peças não somente especifica os acessórios padrões mas também as peças opcionais e aditamentos. Para pedir uma peça, entre em contato com o revendedor Komatsu mais próximo.

Este catálogo de peças contém as seguintes informações e códigos especiais:

LISTA DE PEÇAS E ILUSTRAÇÕES

Ao abrir este catálogo de peças, encontrar-se-á uma ilustração seguida do número da figura (FIG.). A cada peça individual na ilustração corresponde um número de índice. Seguindo a ilustração, as peças componentes da unidade são listadas na ordem dos números de índice nela indicados. O número, nome, quantidade e número de série aplicável da peça são aprsentados como uma lista de peças.

NÚMERO DA FIGURA (FIG.)

O número da figura (FIG.) é o número que mostra a ilustração da página. Não é um número para fornecimento de peças sobressalentes. Os números nem sempre são contínuos.ebene Zubehör bestimmt.

LISTA DE PEÇAS

As informações das peças sobressalentes são relacionadas na página com a lista de peças de acordo com o seguinte:

Índice (Index):

Este é o mesmo que o número de índice na ilustração. As peças são relacionadas na ordem dos números de índice.

Código (Code):

Códigos são utilizados nesta coluna e significam o seguinte:

A1 Esta peça e a peça especificada na linha imediatamente acima são intercambiáveis.

A2 A peça especificada na linha acima pode ser utilizada no lugar desta peça.

A3 Esta peça pode ser utilizada no lugar da peça especificada na linha imediatamente acima.

A4 A peça especificada na coluna “Descrição” pode ser utilizada no lugar desta peça se usada como um conjunto.

B1 Indica peça descontinuada. A peça especificada na linha acima é fornecida em seu lugar.

B2 Indica peça descontinuada. A peça especificada na coluna “Descrição” é fornecida em seu lugar como um conjunto.

C1 Esta peça não pode ser fornecida como peça individual. Ela é fornecida como um conjunto.

C2 Esta peça é fornecida somente para revendedores Komatsu autorizados. Não pode ser fornecida como peça individual. Ela é fornecida como um conjunto.

C3 Indica peça fornecida em condição semiacabada. Requer trabalho adicional antes da instalação.

Número da peça (Part Number):

O número indicado na coluna de números de peça corresponde ao número da peça exibida. É o código de identificação usado para o pedido da peça. É importante não enganar-se de número de código ao pedir a peça.

Descrição (Description):

Indica o nome da peça que tem o seu número de peça relacionado. O símbolo "·" é colocado na frente do nome peça do componente de uma peça de conjunto, e o item é lançado seguindo o conjunto. Se uma peça indicada com "·" é um subconjunto, os seus componentes são indicados por "· ·".

Exemplo: Tank Assembly
· Tank
· Cap
· · Packing

Além disso, os seguintes símbolos e abreviações são usados nesta coluna.

Kit Indica peças de um jogo. Para peças de jogo, referir-se à seção "FIELD REPAIR SERVICE PARTS" neste catálogo de peças.

D Diâmetro
L Comprimento
L.H. Lado esquerdo
R.H. Lado direito
T Espessura
W Largura

Quantidade (Qty):

Indica o número de peças utilizadas em uma máquina. Contudo, se uma peça é incluída no conjunto e/ou componente, a quantidade por conjunto e/ou componente é especificada.
O código AR (como requerido) usar-se-á na coluna "Quantitade" caso o número de peças por máquina e/ou componente não possa ser especificado. Em tal caso, qualquer número de peças pode ser pedido dependendo dos requisitos de serviço em campo.

Números de série (Serial Numbers):

O número de série do motor aplicável é indicado para o volume do motor. No volume da carroceria, indica o número de série da máquina na qual a peça é utilizada.

Se o número de série está entre parêntesis, mostra que é o número de série aplicável para uso exclusivo do equipamento do número da figura (FIG.)

订购零件时，请注明需要零件的货号、品名、数量以及使用机器的车辆编号、发动机型号和系列号、工作时数。

此零件明细表上不仅记载了标准装备零件，还记载了选购零件、附件零件。如果您需要订货，请与最近的小松代理店联系。

为了清楚明了，零件手册中有如下规定：

图表

打开此零件清单后，可以看到附带图号（FIG.）的零件明细表图示。在图示上标有各种零件的索引号码。除图之外，还按索引号码的顺序列表表示货号、品名、数量、适用机型。

图号（FIG.）

图号表示该页图的号码。它不是补充零件用的货号。此号码不一定是连续号码。

零件表

从左栏开始按以下顺序显示零件的明细。

索引 (Index):

与图的索引号码一致，按索引号码顺序编制为表格形式。

代号 (Code):

此栏使用的代号如下所示：

A1　此行零件可与紧挨着的上一行零件互换使用。

A2　上一行的零件可取代此行零件来使用。

A3　此行零件可代替紧挨着的上一行零件使用。

A4　品名栏内的零件配套后，可取代此行零件来使用。

B1　该行零件已停止供应，用上一行的零件代替使用。

B2　该行零件已停止供应，品名栏内的零件配套后代替此行零件供应。

C1　此行零件拟成套供应，不以单一零件供应。

C2　此行零件主要面向特定的代理。不以单一零件供应，只拟成套供应。

C3　此行零件以半成品的形式供应，使用前必需再加工。

货号 (Part Number):

此栏所示的编号是图示零件的货号。它是在订货时需要标明的特定代号，是非常重要的。

品名 (Description):

表示相当于货号的零件名称。构成组装品的零件，在品名的前面有 “·” 标记，记载在组装品之后。另外，如果标记 “·” 的零件是组装品，则该构成零件的品名前标有 “· ·” 标记。

例： TANK ASSEMBLY
· TANK
· CAP
· · PACKING

另外，说明栏可能显示以下代号。

Kit 表示修理包。关于修理包构件详情，请参考此零件清单中 “现场修理服务零件” 部分的内容。
D 直径
L 全长
L.H. 左侧
R.H. 右侧
T 厚度
W 全宽

数量 (Qty):

表示一台机器中需要使用的该零件数量。但是，如果是组装零件的构成零件时，表示其组装件的件数。如果不能指定每个机器以及（或者）组装零件中必须的零件数量时，可以在零件数量栏中使用代码 AR。此时，数量由现场的服务要件决定，然后进行定购。

适用机型 (Serial Numbers):

发动机篇中表示该使用零件的发动机型号，在机体篇中表示该使用零件的车辆号码。

如果适用机型位于括号中，表明该适用机型专门用于图号 (FIG.) 中所指的设备。

ПРЕДИСЛОВИЕ

При заказе запчасти укажите номер части, наименование части и нужное количество; кроме того, укажите код модели вашей машины, серийный номер машины, серийный номер двигателя и показания счетчика мото-часов.

В Каталоге приведены не только стандартные изделия, но и дополнительное оборудование и принадлежности. Для заказа запчасти пожалуйста обратитесь к ближайшему дилеру "Комацу".

Содержащаяся в Каталоге информация и специальные коды разъясняются ниже:

РИСУНОК И ПЕРЕЧЕНЬ ЧАСТЕЙ

Раскрыв Каталог, вы увидите рисунок после номера рисунка (ПОЗ). Каждой отдельной части на рисунке присвоен позиционный номер. За рисунком следует перечень составных частей устройства в порядке номеров позиций рисунка. Перечень частей указывает для каждой части ее номер, наименование, количество и применимый серийный номер.

НОМЕР РИСУНКА (ПОЗ)

Номер рисунка (ПОЗ) – это номер, который указывает рисунок на странице. Он не является номером запчасти. Последовательность номеров не обязательно непрерывна.

ПЕРЕЧЕНЬ ЧАСТЕЙ

Данные запасных частей приведены на странице перечня частей следующим образом:

Индекс (Index):

То же, что номер позиции на рисунке. Части перечислены в порядке их позиционных номеров.

Код: (Code):

В этой колонке находятся коды, обозначающие следующее:

A1 Данная часть и часть, указанная в предыдущей строке, взаимозаменяемы.

A2 Вместо данной части можно использовать часть, указанную в предыдущей строке.

A3 Данную часть можно использовать вместо части, указанной в предыдущей строке.

A4 В комплекте, вместо данной части можно использовать указанную в колонке описания.

B1 Поставки этой части прекращены. Взамен поставляется часть, указанная в предыдущей строке.

B2 Поставки этой части прекращены. Взамен комплектом поставляется часть, указанная в колонке описания.

C1 Данная часть отдельно не поставляется. Она поставляется с узлом.

C2 Данная часть поставляется лишь уполномоченным дилерам "Комацу". Отдельно не поставляется. Поставляется с узлом.

C3 Обозначает часть, поставляемую без доводки. Требует предустановочной подготовки.

Номер части (Part Number):

Приведенный в колонке номеров частей номер является номером изображенной части. Это код-идентификатор для заказа данной части. Важно, чтобы при заказе этот кодовый номер был указан без ошибок.

Описание (Description):

Здесь приводится наименование части, обозначенной номером в перечне. Значок "·" ставится перед наименованием детали компонента, причем деталь записана после узла. Если помеченная "·" часть является подсборкой узла, то ее составные части обозначаются значком "··".

Пример: Tank Assembly
·Tank
·Cap
··Packing

Далее, в этой колонке используются следующие обозначения и сокращения.

Kit	Указывает на элементы комплекта. Элементы комплекта смотри в разделе ЗАПАСНЫЕ ЧАСТИ ДЛЯ РЕМОНТА В УСЛОВИЯХ ЭКСПЛУАТАЦИИ данного Каталога.
D	Диаметр
L	Длина
L.H.	Левая сторона
R.H.	Правая сторона
T	Толщина
W	Ширина

Количество (Qty):

Указывает общее число изделий в одной машине. Если же изделие является частью узла и/или устройства, то указывается количество в таком узле и/или устройстве.
При невозможности указать количество частей на машину и/или устройство, в колонке Количество проставляется код AR (по потребности). В таком случае можно заказывать любые количества в зависимости от потребностей обслуживания на месте.

Серийные номера (Serial Numbers):

В книге по двигателю приводится соответствующий серийный номер двигателя. В книге по шасси указывает на серийный номер машины, где используется данная часть.

Серийный номер, заключенный в круглые скобки означает, что он применяется только для оборудования с номером рисунка (ПОЗ.)

. رقم القطعة (Part Number)

الرقم الوارد في عمود رقم القطعة هو رقم القطعة الخاص بالقطعة المبينة. وهو الرمز المستخدم لطلب تلك القطعة. ومن الضروري عدم ارتكاب اي خطأ في تحديد هذا الرقم عند طلب القطع.

. الوصف (Description)

يعطي اسم القطعة المدرج رقمها في القائمة. توضع العلامة "٠" امام اسم المكون لمجموعة ما ويدرج البند بعد المجموعة. اذا كانت القطعة المشار اليها بالعلامة "٠" هي نفسها عبارة عن مجموعة مكونات, فان كلا من مكوناتها يشار اليها بالعلامة "٠٠".
مثال

Tank Assembly
٠Tank
٠Cap
٠٠Packing

بالاضافة الى ذلك, العلامات والمختصرات التالية تستخدم في هذا العمود.

Kit	هذا يشير الى قطع الطقم. حول قطع الطقم, راجع قسم "قطع غيار خدمة الإصلاح الميداني" في كتاب القطع هذا.
D	قطر
L	طول
L.H.	جانب اليد اليسارى
R.H.	جانب اليد اليمنى
T	السمك
W	العرض

. الكمية (Qty)

هذا هو عدد القطع المستخدمة لآلية واحدة. اما بالنسبة لمجموعات المكونات ومجموعات القطع فانه يتم تحديد عدد القطع لكل مجموعة.
الرمز AR (حسب الطلب) سوف يستخدم في عمود الكمية اذا لم يتم تحديد عدد القطع المطلوبة لكل مانكة و/او للمجموعة. في مثل هذه الحالة, فان اي عدد من الكميات ربما يتم طلبه بشكل يعتمد على متطلبات مجال الخدمة.

. الرقم التسلسلي (Serial Numbers)

في كتاب قطع المحرك يشير هذا الرقم الى الرقم التسلسلي للمحرك الذي تستخدم فيه القطعة. قي كتاب قطع الآلية, يشير هذا الرقم الى الرقم التسلسلي للآلية التي تستخدم فيها القطع.

في حالة وضع الرقم التسلسلي بين الأقواس، فهذا يعني أن هذا هو الرقم التسلسلي الساري للاستخدام الحصري للقطعة الموضحة بالشكل.

عند طلب القطع, يرجى تحديد رقم القطعة واسم القطعة والكمية المطلوبة من القطعة, مع تحديد رقم الموديل والرقم التسلسلي وقراءة عداد الخدمة.

قائمة القطع هذه لا تقتصر على الكميات القياسية فقط بل تشمل ايضاً القطع والملحقات الاختيارية. لطلب القطع, يرجى الاتصال باقرب موزع لمنتجات كوماتسو.

كتاب القطع هذا يحتوي على المعلومات ورموز التخصيص وكما مبين ادناه:

الشكل والقائمة

عندما تفتح كتاب القطع هذا, سوف تجد رسومًا توضيحية تتضمن رقم الشكل (الشكل). كل قطعة مفردة في الرسم يعطى لها رقم فهرس. في الرسم التالي, قطع المجموعة للوحدة تم ادراجها حسب ترتيب ارقام الفهرس المبينة في الرسم.. رقم القطعة, اسم القطعة, الكمية والرقم التسلسلي المطابق يعطى لكل قطعة حسب تسلسل القطع في القائمة.

رقم الشكل (الشكل)

رقم الشكل (الشكل) هو الرقم الذي يميز شكل ما داخل الصفحة. إنه ليس رقم القطعة. وليست الأرقام متتابعة دائمًا.

قائمة القطع

معلومات قطع الغيار مثبتة في صفحة قائمة القطع وكلاتي:

. الفهرست (Index)

هذا الرقم هو نفس رقم الفهرس الوارد في الشكل التوضيحي. تدرج القطع في القائمة مرتبة تبعاً لارقام الفهرس.

. الرمز (Code)

الرموز تستخدم في هذا العمود وتوصف كلاتي:

A1 هذه القطعة والقطعة المذكورة في السطر السابق مباشرة يمكن لكل منهما ان تحل محل الاخرى.

A2 القطعة المذكورة في السطر السابق يمكن استعمالها بدلاً من هذه القطعة.

A3 هذه القطعة يمكن استعمالها بدلاً من القطعة المذكورة في السطر السابق مباشرة.

A4 القطعة المذكورة في عمود الوصف يمكن استعمالها بدلاً من هذه القطعة اذا استخدمت كطقم.

B1 هذه القطعة توقف توريدها. يتم توريد القطعة المذكورة في السطر السابق بدلاً منها.

B2 هذه القطعة توقف توريدها. يتم توريد القطعة المذكورة في عمود "الوصف" بدلاً منها كطقم.

C1 هذه القطعة لا يمكن توريدها كقطعة منفردة. يتم توريدها كمجموعة.

C2 هذه القطعة يتم تجهيزها من قبل موزعين كوماتسو المرخصين فقط. لا يمكن تجهيزها كقطعة مفردة. يتم تجهيزها كمجموعة.

C3 هذا يشير الى قطعة موردة شبه مكتملة التصنيع. تتطلب استكمال تصنيعها قبل الاستعمال.

CONTENTS

	FIG No.	PAGE
FOREWORD		2
ENGINE CYLINDER HEAD AND ITS RELATED PARTS		
Air Intake Manifold and Connection	(X16-0385650)	
	A1310-001001	50
Cylinder Head	(X16-0382070)	
	A1010-001001	51
Exhaust Manifold	(X16-0380130)	
	A1510-001001	53
Turbocharger	(X16-0383960)	
Inner Parts	A1530-001001	54
Mounting	A1530-001002	55
Exhaust Muffler	(X16-0392650)	
	A1610-002001	56
Water Temperature Sensor	(X16-0380360)	
	A1790-001001	57
Heat Shield	(X16-0392630)	
	A1570-002001	58
Exhaust Gas Re-circulation (EGR) Valve (For Cold Area Specification A (-30 deg C))	(X16-0392720)	
Inner Parts, EGR Valve	A1550-002001	59
EGR Valve and Cooler Mounting (1/2)	A1550-002002	61
Inner Parts, Pump	A1550-002003	62
EGR Valve and Cooler Mounting (2/2)	A1550-002004	63
EGR Cooler Piping and Air Vent	A1550-002005	64
EGR Valve Lubricating Oil Piping	A1550-002006	65
Exhaust Gas Re-circulation (EGR) Valve	(X16-0392930)	
Inner Parts, EGR Valve	A1550-003001	66
EGR Valve and Cooler Mounting (1/2)	A1550-003002	68
Inner Parts, Pump	A1550-003003	69
EGR Valve and Cooler Mounting (2/2)	A1550-003004	70
EGR Cooler Piping and Air Vent	A1550-003005	71
EGR Valve Lubricating Oil Piping	A1550-003006	72
Rocker Arm Housing Cover	(X16-0380020)	
	A1110-001001	73
Rocker Arm Housing Cover Accessory	(X16-0386270)	
Breather and Hose	A1111-001001	74
ENGINE CYLINDER BLOCK AND ITS RELATED PARTS		
Oil Pan and Suction Tube	(X16-0383920)	
	A2110-001001	76
Camshaft	(X16-0381860)	
Camshaft and Cam Follower	A2410-001001	77
Rocker Arm and Housing	A2410-001002A	78
Front Cover Accessory	(X16-0392690)	
Mounting Bolt and Pointer	A2041-002001	79
Front Cover	(X16-0383890)	
	A2040-001001	80
Idle Gears	(X16-0370480)	
	A2050-001001	81
Flywheel Housing	(X16-0380500)	
	A2210-001001A	82
Flywheel	(X16-0380530)	
	A2230-001001	83
Crank Pulley (For Hardened Pulley)	(X16-0382850)	
	A2370-001001	84

Crank Pulley .....(X16-0392620)
Non Hardening Spec. A2370-004001 85
Cylinder Block .....(X16-0380370)
A2010-001001 86
Cylinder Block Accessory .....(X16-0387290)
Oil Pressure Sensor and Blind Cover A2011-001001 87
Cylinder Block Accessory (For Cold Area Specification A (-30 deg C)) .....(X16-0392730)
A2011-002001 88
Crankshaft .....(X16-2301130)
A2310-001001 89
Vibration Damper .....(X16-0382840)
A2330-001001 90
Piston and Connecting Rod .....(X16-0383200)
A2350-001001 91
Cam Follower Cover and Oil Filler .....(X16-0385720)
A2060-001001 92
Engine Front Support .....(X16-0385751)
A2250-002001 93
Fan Sub Assembly and Air Cleaner .....(X16-0389020)
Fan B9999-501001 94
Air Cleaner Assembly B9999-501002 95
ENGINE LUBRICATION SYSTEM
Engine Oil Filter and Piping .....(X16-0387750)
A3110-001001 98
Fuel Filter and Piping .....(X16-0387771)
A4110-002001 99
Fuel Filter and Piping (For Bad Fuel and Poor Fuel Specification, Water+Dust, Turkey) .....(X16-0393410)
A4110-003001 100
Engine Oil Pump .....(X16-0380570)
A3010-001001 101
Engine Oil Cooler .....(X16-0386360)
A3310-001001 102
Engine Oil Cooler Related Parts .....(X16-0395820)
A3311-002001 103
ENGINE FUEL SYSTEM
Fuel Prefilter .....(X16-0385780)
Fuel Prefilter (1-1/4) A4150-001001 106
Priming Pump and Piping A4150-001002 108
Fuel Prefilter .....(X16-0459030)
Service Only A4159-001001 109
Fuel Supply Pump .....(X16-0385460)
Inner Parts, Pump A4010-001001 110
Inner Parts, Feed Pump A4010-001002 112
Pump Mounting A4010-001003 113
Inner Parts, Common Rail A4010-001004 114
Mounting A4010-001005 115
Return Piping A4010-001006 116
Fuel Supply Pump Drive .....(X16-0380710)
A4080-001001 117
Fuel Injector .....(X16-0386370)
A4210-001001 118
Fuel Injection Controller Related Parts .....(X16-0381950)
Fuel Piping (1/2) A4030-001001 119
Fuel Piping (2/2) A4030-001002 120
Fuel Return .....(X16-0385920)
A4230-001001 121

Fuel Filter Cartridge ..... (X16-0394140)
Service Only A4119-001001 122
ENGINE COOLING SYSTEM
Thermostat and Thermostat Housing ..... (X16-0392950)
A1730-002001 124
Cooling Fan Drive ..... (X16-0385860)
A5060-001001 125
Water Pump Mounting and Air Vent ..... (X16-0380770)
A5010-001001A 126
Corrosion Resistor ..... (X16-0388110)
Without Corrosion Resister A5210-001001 128
ENGINE ELECTRICAL SYSTEM
Alternator (50Amp, For Hardened Pulley) ..... (X16-0387810)
Inner Parts A6010-001001 130
Mounting A6010-001002 131
Alternator (50Amp) ..... (X16-0389520)
Inner Parts A6010-003001 132
Mounting A6010-001002 131
Starting Motor (7.5KW) ..... (X16-0387330)
Inner Parts A6210-001001 133
Mounting A6210-001002 135
Starting Motor (11KW) ..... (X16-0391720)
Inner Parts A6210-002001 136
Mounting A6210-002002 138
Wiring Harness ..... (X16-0389550)
Engine Wiring Harness A6810-002001 139
Wiring Harness Support A6810-002002 141
ENGINE ACCESSORIES AND OTHERS
Water Drain Valve ..... (X16-0381910)
A3330-001001 144
Engine Controller ..... (X16-0387780)
A4710-001001 145
ENGINE MARKS AND PLATES
Name Plate and Caution Plate (For EPA Regulations TPEM) ..... (X16-0394690)
A9810-009001 148
Name Plate and Caution Plate (For Canada Exhaust Gas TPEM) ..... (X16-0395040)
A9810-011001 149
Name Plate and Caution Plate (For North America EPA 3rd Regulations) ..... (X16-0395510)
A9810-013001 150
Name Plate and Warning Decal ..... (X16-0388930)
A9810-001001 151
Name Plate and Warning Decal (For EU Safety Regulation) ..... (X16-0394230)
A9810-004001 152
Name Plate and Warning Decal (For Except Japan) ..... (X16-0394520)
A9810-006001 153
Name Plate and Warning Decal (For EU Safety Regulation) ..... (X16-0394550)
A9810-007001 154
Name Plate and Warning Decal ..... (X16-0394640)
A9810-014001 155
Name Plate and Warning Decal (For EU Safety Regulation, Turkey Exhaust Emissions 3rd Regulations) ..... (X16-0394850)
A9810-010001 156
ENGINE RELATED PARTS
Engine Mounting ..... (X25-0774201)
B0100-001001 158
Engine Wiring Harness (Without KOMTRAX) ..... (X25-1251650)
Wiring Harness Mounting, Engine (1/2) B0110-006001 159

Wiring Harness Mounting, Engine (2/2) B0110-006002 160
Air Cleaner Assembly B0110-006003 161
Mounting B0110-006004 162
Engine Wiring Harness (With 50Amp. Alternator, KOMTRAX) ..... (X25-1251640)
Wiring Harness Mounting, Engine (1/2) B0110-006001 159
Wiring Harness Mounting, Engine (2/2) B0110-006002 160
Air Cleaner Assembly B0110-006003 161
Dust Indicator B0110-005004 163
Mounting B0110-006004 162
Engine Wiring Harness (With 75Amp. Alternator, KOMTRAX) ..... (X25-1251910)
Wiring Harness Mounting, Engine (1/2) B0110-007001 164
Wiring Harness Mounting, Engine (2/2) B0110-007002 165
Air Cleaner Assembly B0110-006003 161
Dust Indicator B0110-005004 163
Mounting B0110-006004 162
Exhaust Pipe ..... (X25-0184333)
B0300-002001 166
COOLING SYSTEM
Radiator ..... (X25-1226370)
Radiator Core, Aftercooler and Oil Cooler C0110-004001A 168
Mounting (1/3) C0110-004002 170
Inner Parts, Fan Motor C0110-004003 171
Fan Motor C0110-004004 173
Mounting (2/3) C0110-004005 174
Fan Guard C0110-004006 176
Backup Alarm C0110-004007 177
Grille C0110-004008 178
Working Lamp C0110-004009 179
Fan Motor Piping C0110-004010 180
Oil Cooler Piping C0110-004011 181
Rear Support C0110-004012 182
Condenser C0110-004013 183
Breather, Fuel Tank C0110-004014 184
Mounting (3/3) C0110-004015 185
Piping C0110-004016 186
Torque Converter Cooler Piping C0110-004017 187
Sheet C0110-004018 188
Sub-tank C0110-004019 189
Spill Hose Piping C0110-004020 190
Radiator (For Europe Specification) ..... (X25-1268251)
Radiator Core, Aftercooler and Oil Cooler C0110-005001A 191
Mounting (1/3) C0110-005002 193
Inner Parts, Fan Motor C0110-005003 194
Fan Motor C0110-005004 196
Mounting (2/3) C0110-005005 197
Fan Guard C0110-005006 199
Backup Alarm C0110-005007 200
Grille C0110-005008 201
Working Lamp C0110-005009 202
Fan Motor Piping C0110-005010 203
Oil Cooler Piping C0110-005011 204
Rear Support C0110-005012 205
Condenser C0110-005013 206
Breather, Fuel Tank C0110-005014 207
Mounting (3/3) C0110-005015 208
Piping C0110-005016 209
Torque Converter Cooler Piping C0110-005017 210

Sheet C0110-005018 211
Sub-tank C0110-005019 212
Spill Hose Piping C0110-005020 213
Supply Parts C0110-005021 214
Cooling Piping ..... (X25-1226380)
C0120-002001 215
FUEL SYSTEM
Fuel Tank ..... (X25-0774262)
Fuel Tank Related Parts D0100-002001 218
Mounting D0100-002002 220
Breather D0100-002003 221
Clamp D0100-002004 222
Fuel Tank (For Europe Specification) ..... (X25-1268121)
Fuel Tank Related Parts D0100-003001 223
Mounting D0100-003002 225
Breather D0100-003003 226
Clamp D0100-003004 227
ELECTRICAL SYSTEM
Battery ..... (X25-0448680)
E0110-002001 230
Battery (Large Capacity) ..... (X25-0203850)
E0110-001001 231
Battery Box (Without Oil Filler Cap Lock and Cover Lock) ..... (X25-1237690)
Cover, L.H. E0120-008001 232
Cover, R.H. E0120-008002 233
Holder E0120-008003 234
Rear Combination Lamp E0120-008004 235
Battery Box Wiring Harness E0120-008005 236
Cover E0120-008006 237
Battery Box (With Oil Filler Cap Lock and Cover Lock) ..... (X25-1237710)
Cover, L.H. E0120-008001 232
Cover, R.H. E0120-008002 233
Holder E0120-008003 234
Rear Combination Lamp E0120-008004 235
Padlock E0120-010005 238
Battery Box Wiring Harness E0120-008005 236
Cover E0120-008006 237
Battery Box (With Oil Filler Cap Lock and Cover Lock, For North America) ..... (X25-1237700)
Cover, L.H. E0120-008001 232
Cover, R.H. E0120-008002 233
Holder E0120-008003 234
Rear Combination Lamp E0120-009004 239
Padlock E0120-010005 238
Battery Box Wiring Harness E0120-008005 236
Cover E0120-008006 237
Battery Box (With Oil Filler Cap Lock and Cover Lock, Battery Disconnect Switch) ..... (X25-1237730)
Cover, L.H. E0120-008001 232
Cover, R.H. E0120-013002 240
Holder E0120-008003 234
Rear Combination Lamp E0120-008004 235
Padlock E0120-010005 238
Battery Box Wiring Harness E0120-013006 241
Cover E0120-008006 237
Disconnect Switch E0120-013008 242
Front Wiring Harness (Without Load Meter) ..... (X25-0774292)
Wiring Harness (1/2) E0200-001001 243
Wiring Harness (2/2) E0200-001002 244

Front Wiring Harness (With Brake Oil Cooling System, Without Load Meter) ....(X25-1760110)
Wiring Harness (1/2) E0200-001001 243
Wiring Harness (2/2) E0200-003002 245
Rear Wiring Harness (Without Emergency Steering, Automatic Control Type) ....(X25-1226710)
Mounting (1/2) E0202-004001 246
Mounting (2/2) E0202-004002 248
Battery Cable E0202-004003 250
Wiring Harness and Relay E0202-004004 251
Fuse E0202-004005 252
Wiring Harness E0202-004006 253
Ground Cable E0202-004007A 254
Rear Wiring Harness (With Emergency Steering, Automatic Control Type) ....(X25-1226390)
Mounting (1/2) E0202-004001 246
Mounting (2/2) E0202-004002 248
Battery Cable E0202-004003 250
Wiring Harness and Relay E0202-003004 255
Fuse E0202-004005 252
Wiring Harness E0202-003006 256
Ground Cable E0202-003007A 257
Front Lamp ....(X25-0774312)
L.H. E0300-006001 258
R.H. E0300-006002 259
Bolt E0300-006003 260
Front Working Lamp (Without Amber Color Warning Beacon, Japan Crushed Stone Association Arrangement) ....(X25-0691211)
E0340-001001 261
Working Lamp (With Amber Color Warning Beacon Guard) ....(X25-1225380)
Working Lamp, Front E0340-010001 262
Beacon Lamp Guard E0340-010002 263
Horn ....(X25-1226400)
E0410-002001 264
POWER TRANSMITTING SYSTEM
Propeller Shaft ....(X25-1226410)
Shaft and Bolt F4200-003001A 266
Front F4200-003002 267
Rear F4200-003003 268
Torque Converter and Transmission (With Lockup Type) ....(X25-1236650)
Pump and Turbine F4300-004001 269
Forward and 1st Housing F4300-004002 270
Reverse and 2nd Housing F4300-004003 272
3rd and 4th Housing F4300-004004 274
Transmission Case F4300-004005 276
Relief Valve F4300-004006 278
Control Valve (1/7) F4300-004007 279
Control Valve (2/7) F4300-004008 281
Control Valve (3/7) F4300-004009 283
Control Valve (4/7) F4300-004010 284
Control Valve (5/7) F4300-004011 285
Control Valve (6/7) F4300-004012 287
Control Valve (7/7) F4300-004013 289
Piping F4300-004014 290
Accessory (1/2) F4300-004015A 292
Accessory (2/2) F4300-004016 294
Input Shaft F4300-004017 295
Output Shaft F4300-004018 296
Coupling F4300-004019 298
Mounting (1/3) F4300-004020 300

Mounting (2/3) F4300-004021 301
Torque Converter Cooler Piping F4300-004022 302
Torque Converter Cooler Piping Mounting F4300-004023A 303
Mounting (3/3) F4300-004024 304
Filler Tube F4300-004025 305
Parking Brake Piping F4300-004026 306
Torque Converter and Transmission (Without Lockup Type) ..... (X25-1226420)
Pump and Turbine F4300-003001 307
Forward and 1st Housing F4300-004002 270
Reverse and 2nd Housing F4300-004003 272
3rd and 4th Housing F4300-004004 274
Transmission Case F4300-004005 276
Relief Valve F4300-004006 278
Control Valve (1/7) F4300-004007 279
Control Valve (2/7) F4300-004008 281
Control Valve (3/7) F4300-004009 283
Control Valve (4/7) F4300-004010 284
Control Valve (5/7) F4300-004011 285
Control Valve (6/7) F4300-004012 287
Control Valve (7/7) F4300-003013 308
Piping F4300-004014 290
Accessory (1/2) F4300-004015A 292
Accessory (2/2) F4300-003016 309
Input Shaft F4300-003017 310
Output Shaft F4300-004018 296
Coupling F4300-004019 298
Mounting (1/3) F4300-004020 300
Mounting (2/3) F4300-004021 301
Torque Converter Cooler Piping F4300-004022 302
Torque Converter Cooler Piping Mounting F4300-004023A 303
Mounting (3/3) F4300-004024 304
Filler Tube F4300-004025 305
Parking Brake Piping F4300-004026 306
Front Axle (With Limited Slip Differential) ..... (X25-1226430)
Final Drive L.H. F4400-003001 311
Final Drive R.H. F4400-003002 313
Differential (1/3) F4400-003003A 315
Differential (2/3) F4400-003004 317
Differential (3/3) F4400-003005 318
Brake F4400-003006 320
Mounting (1/2) F4400-003007 321
Mounting (2/2) F4400-003008 322
Front Axle (With Limited Slip Differential, Brake Oil Cooling System) ..... (X25-1929240)
Final Drive L.H. F4400-003001 311
Final Drive R.H. F4400-003002 313
Differential (1/3) F4400-003003A 315
Differential (2/3) F4400-003004 317
Differential (3/3) F4400-003005 318
Brake F4400-003006 320
Mounting (1/2) F4400-003007 321
Mounting (2/2) F4400-003008 322
Piping F4400-006009 323
Front Axle (Without Limited Slip Differential) ..... (X25-1226720)
Final Drive L.H. F4400-003001 311
Final Drive R.H. F4400-003002 313
Differential (1/3) F4400-003003A 315
Differential (2/3) F4400-004004 324

Differential (3/3) F4400-003005 318
Brake F4400-003006 320
Mounting (1/2) F4400-003007 321
Mounting (2/2) F4400-003008 322
Front Axle (With Brake Oil Cooling System, Without Limited Slip Differential) ..... (X25-1760070)
Final Drive L.H. F4400-003001 311
Final Drive R.H. F4400-003002 313
Differential (1/3) F4400-003003A 315
Differential (2/3) F4400-004004 324
Differential (3/3) F4400-003005 318
Brake F4400-003006 320
Mounting (1/2) F4400-003007 321
Mounting (2/2) F4400-003008 322
Piping F4400-006009 323
Rear Axle (With Limited Slip Differential) ..... (X25-1226440)
Final Drive L.H. F4500-004001 336
Final Drive R.H. F4500-003002 325
Differential (1/3) F4500-003003A 327
Differential (2/3) F4500-003004 329
Differential (3/3) F4500-003005 330
Brake F4500-003006 332
Mounting (1/2) F4500-003007 333
Mounting (2/2) F4500-003008 334
Rear Axle (With Limited Slip Differential, Brake Oil Cooling System) ..... (X25-1929260)
Final Drive L.H. F4500-004001 336
Final Drive R.H. F4500-003002 325
Differential (1/3) F4500-003003A 327
Differential (2/3) F4500-003004 329
Differential (3/3) F4500-003005 330
Brake F4500-003006 332
Mounting (1/2) F4500-003007 333
Mounting (2/2) F4500-003008 334
Piping F4500-006009 335
Rear Axle (Without Limited Slip Differential) ..... (X25-1226730)
Final Drive L.H. F4500-004001 336
Final Drive R.H. F4500-003002 325
Differential (1/3) F4500-003003A 327
Differential (2/3) F4500-004004A 338
Differential (3/3) F4500-003005 330
Brake F4500-003006 332
Mounting (1/2) F4500-003007 333
Mounting (2/2) F4500-003008 334
Rear Axle (With Brake Oil Cooling System, Without Limited Slip Differential) ..... (X25-1760090)
Final Drive L.H. F4500-004001 336
Final Drive R.H. F4500-003002 325
Differential (1/3) F4500-003003A 327
Differential (2/3) F4500-004004A 338
Differential (3/3) F4500-003005 330
Brake F4500-003006 332
Mounting (1/2) F4500-003007 333
Mounting (2/2) F4500-003008 334
Piping F4500-006009 335
Transmission Mounting ..... (X25-0774371)
F4810-001001 339
HYDRAULIC SYSTEM
Hydraulic Tank (Without Emergency Steering, Automatic Control Type) ..... (X25-1226740)
Hydraulic Tank Elbow H0110-006001 342

Element and Strainer H0110-006002 343
Bracket H0110-006003 344
Cover and Dust Indicator H0110-006004 345
Mounting H0110-006005 347
Hydraulic Tank (With Emergency Steering, Automatic Control Type) ..... (X25-1226450)
Hydraulic Tank Elbow H0110-005001 348
Element and Strainer H0110-006002 343
Bracket H0110-006003 344
Cover and Dust Indicator H0110-006004 345
Mounting H0110-005005 349
Hydraulic Oil Control Valve (With 2-Spool Control Valve) ..... (X25-1226970)
3-valve (1/8) H0120-008001A 350
3-valve (2/8) H0120-008002 352
3-valve (3/8) H0120-008003 353
3-valve (4/8) H0120-008004 354
3-valve (5/8) H0120-008005 356
3-valve (6/8) H0120-008006 357
3-valve (7/8) H0120-008007 359
3-valve (8/8) H0120-008008 361
Bracket H0120-008009 362
Elbow H0120-008010 363
Hydraulic Oil Control Valve (With 2-Spool Control Valve, ECSS) ..... (X25-1226460)
3-valve (1/9) H0120-008001A 350
3-valve (2/9) H0120-008002 352
3-valve (3/9) H0120-008003 353
3-valve (4/9) H0120-008004 354
3-valve (5/9) H0120-008005 356
3-valve (6/9) H0120-008006 357
3-valve (7/9) H0120-007007 365
3-valve (8/9) H0120-007008 367
3-valve (9/9) H0120-008008 361
Bracket H0120-007010 368
Elbow H0120-007011 369
Hydraulic Oil Control Valve (With 2-Spool Control Valve, Brake Oil Cooling System) ..... (X25-1929270)
3-valve (1/8) H0120-008001A 350
3-valve (2/8) H0120-008002 352
3-valve (3/8) H0120-008003 353
3-valve (4/8) H0120-008004 354
3-valve (5/8) H0120-008005 356
3-valve (6/8) H0120-008006 357
3-valve (7/8) H0120-008007 359
3-valve (8/8) H0120-008008 361
Bracket H0120-012009 371
Elbow H0120-008010 363
Hydraulic Oil Control Valve (With 2-Spool Control Valve, ECSS, Brake Oil Cooling System) ..... (X25-1760120)
3-valve (1/9) H0120-008001A 350
3-valve (2/9) H0120-008002 352
3-valve (3/9) H0120-008003 353
3-valve (4/9) H0120-008004 354
3-valve (5/9) H0120-008005 356
3-valve (6/9) H0120-008006 357
3-valve (7/9) H0120-007007 365
3-valve (8/9) H0120-007008 367
3-valve (9/9) H0120-008008 361
Bracket H0120-011010 372
Elbow H0120-007011 369

Hydraulic Oil Control Valve (With 3-Spool Control Valve) .....(X25-1241580)
4-valve (1/10) H0120-010001A 373
4-valve (2/10) H0120-010002 375
4-valve (3/10) H0120-010003 376
4-valve (4/10) H0120-010004 377
4-valve (5/10) H0120-010005 379
4-valve (6/10) H0120-010006 380
4-valve (7/10) H0120-010007 382
4-valve (8/10) H0120-010008 384
4-valve (9/10) H0120-010009 385
4-valve (10/10) H0120-010010 386
Bracket H0120-010011 387
Elbow (1/2) H0120-008010 363
Elbow (2/2) H0120-010013 388
Hydraulic Oil Control Valve (With 3-Spool Control Valve, ECSS) .....(X25-1241570)
4-valve (1/11) H0120-010001A 373
4-valve (2/11) H0120-010002 375
4-valve (3/11) H0120-010003 376
4-valve (4/11) H0120-010004 377
4-valve (5/11) H0120-010005 379
4-valve (6/11) H0120-010006 380
4-valve (7/11) H0120-009007 389
4-valve (8/11) H0120-009008 390
4-valve (9/11) H0120-010008 384
4-valve (10/11) H0120-010009 385
4-valve (11/11) H0120-010010 386
Bracket H0120-009012 391
Elbow (1/2) H0120-007011 369
Elbow (2/2) H0120-010013 388
Steering Demand Valve .....(X25-0774401)
Inner Parts, Demand Valve H0122-003001 392
Bracket H0122-003002 393
Steering Piping H0122-003003 394
Steering Drain Piping H0122-003004 395
Hydraulic Pump (Without Emergency Steering, Automatic Control Type) .....(X25-1226760)
Loader Pump (1/6) H0210-006001 396
Loader Pump (2/6) H0210-006002 397
Loader Pump (3/6) H0210-006003 398
Loader Pump (4/6) H0210-006004 399
Loader Pump (5/6) H0210-006005 400
Loader Pump (6/6) H0210-006006 401
Fan Pump (1/8) H0210-006007A 402
Fan Pump (2/8) H0210-006008A 404
Fan Pump (3/8) H0210-006009 405
Fan Pump (4/8) H0210-006010 406
Fan Pump (5/8) H0210-006011 407
Fan Pump (6/8) H0210-006012 408
Fan Pump (7/8) H0210-006013 409
Fan Pump (8/8) H0210-006014 410
Steering Pump (1/4) H0210-006015 411
Steering Pump (2/4) H0210-006016 413
Steering Pump (3/4) H0210-006017 414
Steering Pump (4/4) H0210-006018A 416
Inner Parts, Torque Converter Pump (1/2) H0210-006019 417
Inner Parts, Torque Converter Pump (2/2) H0210-006020 418
Mounting H0210-006021 419
Pump Suction H0210-006022 420

Steering Piping H0210-006023 421
Hydraulic Piping H0210-006024 423
Transmission Piping H0210-006025 424
Bracket H0210-006026 426
LS Piping H0210-006027 427
Drain Piping H0210-006028 428
Fan Pump Piping H0210-006029 430
Hydraulic Pump (With Emergency Steering, Automatic Control Type) ..... (X25-1226480)
Loader Pump (1/6) H0210-006001 396
Loader Pump (2/6) H0210-006002 397
Loader Pump (3/6) H0210-006003 398
Loader Pump (4/6) H0210-006004 399
Loader Pump (5/6) H0210-006005 400
Loader Pump (6/6) H0210-006006 401
Fan Pump (1/8) H0210-006007A 402
Fan Pump (2/8) H0210-006008A 404
Fan Pump (3/8) H0210-006009 405
Fan Pump (4/8) H0210-006010 406
Fan Pump (5/8) H0210-006011 407
Fan Pump (6/8) H0210-006012 408
Fan Pump (7/8) H0210-006013 409
Fan Pump (8/8) H0210-006014 410
Steering Pump (1/4) H0210-006015 411
Steering Pump (2/4) H0210-006016 413
Steering Pump (3/4) H0210-006017 414
Steering Pump (4/4) H0210-006018A 416
Inner Parts, Torque Converter Pump (1/2) H0210-006019 417
Inner Parts, Torque Converter Pump (2/2) H0210-006020 418
Mounting (1/2) H0210-006021 419
Pump Suction H0210-006022 420
Steering Piping H0210-006023 421
Hydraulic Piping H0210-006024 423
Transmission Piping H0210-006025 424
Emergency Steering Motor H0210-005026 431
Mounting (2/2) H0210-005027 432
Emergency Steering Pump H0210-005028 433
Bracket H0210-005029 434
Tank to Emergency Steering Pump H0210-005030 435
Emergency Steering Pump Piping H0210-005031 436
Emergency Valve Piping H0210-005032 437
LS Piping H0210-006027 427
Drain Piping H0210-006028 428
Fan Pump Piping H0210-006029 430
Cooling Fan Drive Piping (Without Brake Oil Cooling System) ..... (X25-1226490)
H2260-002001 439
Cooling Fan Drive Piping (With Brake Oil Cooling System) ..... (X25-1760130)
H2260-003001 440
Hydraulic Piping (With 2-Spool Control Valve) ..... (X25-1226980)
Steering Piping H4200-012001 441
Control Valve to Hydraulic Tank H4200-012002 442
Delivery Piping H4200-012003 443
PPC Piping H4200-012004 444
Bucket Cylinder Piping H4200-012005 446
Lift Cylinder Piping H4200-012006 447
Cap H4200-012007 449
PPC Accumulator to Control Valve H4200-012008 450
Return Piping H4200-012009 451

T Block Drain Piping H4200-012010 452
LS Piping H4200-012011 453
Steering Drain Piping H4200-012012 454
Hydraulic Piping (With 2-Spool Control Valve, ECSS) ..... (X25-1226770)
Steering Piping H4200-012001 441
Control Valve to Hydraulic Tank H4200-012002 442
Delivery Piping H4200-012003 443
PPC Piping H4200-012004 444
Bucket Cylinder Piping H4200-012005 446
Lift Cylinder Piping H4200-012006 447
Accumulator to ECSS Valve Piping H4200-011007 455
PPC Accumulator to Control Valve H4200-012008 450
Return Piping H4200-012009 451
T Block Drain Piping H4200-012010 452
LS Piping H4200-012011 453
Steering Drain Piping H4200-012012 454
Hydraulic Piping (With 2-Spool Control Valve, Brake Oil Cooling System) ..... (X25-1929310)
Steering Piping H4200-012001 441
Control Valve to Hydraulic Tank H4200-012002 442
Delivery Piping H4200-012003 443
PPC Piping H4200-012004 444
Bucket Cylinder Piping H4200-012005 446
Lift Cylinder Piping H4200-012006 447
Cap H4200-012007 449
PPC Accumulator to Control Valve H4200-012008 450
Return Piping H4200-017009 456
T Block Drain Piping H4200-012010 452
LS Piping H4200-012011 453
Steering Drain Piping H4200-012012 454
Hydraulic Piping (With 2-Spool Control Valve, ECSS, Brake Oil Cooling System) ..... (X25-1926450)
Steering Piping H4200-012001 441
Control Valve to Hydraulic Tank H4200-012002 442
Delivery Piping H4200-012003 443
PPC Piping H4200-012004 444
Bucket Cylinder Piping H4200-012005 446
Lift Cylinder Piping H4200-012006 447
Accumulator to ECSS Valve Piping H4200-011007 455
PPC Accumulator to Control Valve H4200-012008 450
Return Piping H4200-017009 456
T Block Drain Piping H4200-012010 452
LS Piping H4200-012011 453
Steering Drain Piping H4200-012012 454
Hydraulic Piping (With 3-Spool Control Valve) ..... (X25-1241610)
Steering Piping H4200-012001 441
Control Valve to Hydraulic Tank H4200-012002 442
Delivery Piping H4200-012003 443
PPC Piping H4200-015004 457
Bucket Cylinder Piping H4200-015005 458
Lift Cylinder Piping H4200-012006 447
Cap H4200-015007 459
PPC Accumulator to Control Valve H4200-012008 450
Return Piping H4200-012009 451
T Block Drain Piping H4200-012010 452
LS Piping H4200-012011 453
Steering Drain Piping H4200-012012 454
Attachment Piping (1/2) H4200-015013 460
Attachment Piping (2/2) H4200-015014 461

Mounting H4200-015015 462
Hydraulic Piping (With 3-Spool Control Valve, ECSS) ..... (X25-1241600)
Steering Piping H4200-012001 441
Control Valve to Hydraulic Tank H4200-012002 442
Delivery Piping H4200-012003 443
PPC Piping H4200-015004 457
Bucket Cylinder Piping H4200-015005 458
Lift Cylinder Piping H4200-012006 447
Accumulator to ECSS Valve Piping H4200-011007 455
PPC Accumulator to Control Valve H4200-012008 450
Return Piping H4200-012009 451
T Block Drain Piping H4200-012010 452
LS Piping H4200-012011 453
Steering Drain Piping H4200-012012 454
Attachment Piping (1/2) H4200-015013 460
Attachment Piping (2/2) H4200-015014 461
Mounting H4200-015015 462
Steering Hydraulic Piping (With Joystick Steering System) ..... (X25-1241550)
Steering Cylinder Piping H4410-008001 463
Steering Demand Valve Piping H4410-008002 464
Mounting (1/3) H4410-008003 465
Inner Parts, Stop Valve H4410-008004 466
Mounting (2/3) H4410-008005 467
Mounting (3/3) H4410-008006 468
Stop Valve Piping H4410-008007 469
Steering Drain Piping H4410-008008 470
Steering Hydraulic Piping (With Orbitrol Steering System) ..... (X25-1226780)
Steering Cylinder Piping H4410-008001 463
Steering Demand Valve Piping H4410-008002 464
Mounting (1/3) H4410-008003 465
Inner Parts, Stop Valve H4410-008004 466
Mounting (2/3) H4410-008005 467
Mounting (3/3) H4410-008006 468
Stop Valve Piping H4410-007007 471
Steering Drain Piping H4410-007008 472
FRAME AND ITS RELATED PARTS
Front Frame ..... (X25-1226520)
J4110-009001 474
Front Frame (With High Lift Arm) ..... (X25-1241710)
J4110-011001 475
Front Frame (With Auto-greasing System) ..... (X25-1270380)
J4110-013001 476
Front Frame (With 3-Spool Control Valve) ..... (X25-1241650)
J4110-010001 477
Front Frame (With Brake Oil Cooling System) ..... (X25-1760020)
J4110-014001 478
Rear Frame ..... (X25-1226910)
J4120-007001 479
Rear Frame (Without Power Train Guard) ..... (X25-1226530)
J4120-006001 480
Rear Frame (With Auto-greasing System) ..... (X25-1270400)
J4120-008001 481
Rear Frame (With Brake Oil Cooling System) ..... (X25-2129800)
J4120-012001 482
Rear Frame (With Brake Oil Cooling System, Without Power Train Guard) ..... (X25-1760030)
J4120-010001 483

Hinge Pin .....(X25-1226540)
J4130-002001 484
Steering Cylinder .....(X25-0774481)
L.H. J4140-003001 485
R.H. J4140-003002 486
Steering Cylinder Piping J4140-003003 487
Pin J4140-003004 488
Articulate Lock Bar and Frame Cover (With 2-Spool Control Valve) .....(X25-1226790)
Front Cover J4190-016001 489
Side Cover J4190-016002 490
Bolt J4190-016003 491
Tool Box J4190-016004 492
Articulate Lock Bar and Frame Cover (With 2-Spool Control Valve, Auto-greasing System) .....(X25-1270410)
Front Cover J4190-016001 489
Side Cover J4190-022002 493
Bolt J4190-016003 491
Tool Box J4190-016004 492
Transmission Under Cover J4190-022005A 494
Sheet J4190-022006 495
Articulate Lock Bar and Frame Cover (With 2-Spool Control Valve, Brake Oil Cooling System) .....(X25-2129740)
Front Cover J4190-016001 489
Side Cover J4190-016002 490
Bolt J4190-016003 491
Tool Box J4190-016004 492
Transmission Under Cover J4190-022005A 494
Sheet J4190-028006 496
Articulate Lock Bar and Frame Cover (With 2-Spool Control Valve, Power Train Guard) .....(X25-1241880)
Front Cover J4190-016001 489
Side Cover J4190-016002 490
Bolt J4190-016003 491
Tool Box J4190-016004 492
Transmission Under Cover J4190-021005 497
Articulate Lock Bar and Frame Cover (With 2-Spool Control Valve, For EU New Noise Arrangement 2) (X25-1226920)
Front Cover J4190-016001 489
Side Cover J4190-016002 490
Bolt J4190-016003 491
Tool Box J4190-016004 492
Transmission Under Cover J4190-022005A 494
Sheet J4190-017006 498
Articulate Lock Bar and Frame Cover (With 3-Spool Control Valve) .....(X25-1241680)
Front Cover J4190-019001 499
Side Cover J4190-016002 490
Bolt J4190-016003 491
Tool Box J4190-016004 492
Articulate Lock Bar and Frame Cover (With 3-Spool Control Valve, Power Train Guard) .....(X25-1393340)
Front Cover J4190-019001 499
Side Cover J4190-016002 490
Bolt J4190-016003 491
Tool Box J4190-016004 492
Transmission Under Cover J4190-021005 497
Articulate Lock Bar and Frame Cover (With 3-Spool Control Valve, Auto-greasing System) .....(X25-1270420)
Front Cover J4190-019001 499
Side Cover J4190-022002 493
Bolt J4190-016003 491
Tool Box J4190-016004 492
Transmission Under Cover J4190-022005A 494
Sheet J4190-023006 500

Articulate Lock Bar and Frame Cover (With 3-Spool Control Valve, For EU New Noise Arrangement 2) (X25-1241690)
Front Cover J4190-019001 499
Side Cover J4190-016002 490
Bolt J4190-016003 491
Tool Box J4190-016004 492
Transmission Under Cover J4190-022005A 494
Sheet J4190-020006 501
Rear Axle Support ..... (X25-0184772)
J4210-001001 502
Remote Greasing System (With Brake Oil Cooling System) ..... (X25-1760050)
Axle Support J4710-009001 503
Steering Cylinder J4710-005002 507
Bucket Cylinder J4710-009003 504
Grease Fitting J4710-009004 505
Remote Greasing System (Rear Axle, Steering Cylinder, Bucket) ..... (X25-1226560)
Axle Support J4710-005001 506
Steering Cylinder J4710-005002 507
Bucket Cylinder J4710-009003 504
Grease Fitting J4710-009004 505
Auto-greasing System ..... (X25-1270430)
Pump and Feeder J4710-007001 508
Rear Frame Side (1/2) J4710-007002 509
Rear Frame Side (2/2) J4710-007003 510
Front Frame Side (1/2) J4710-007004 511
Front Frame Side (2/2) J4710-007005 512
Boom, Bell Crank and Link J4710-007006 513
OPERATOR'S COMPARTMENT AND CONTROL SYSTEM
Operator's Seat (Suspension Type, Reclining) ..... (X25-0990311)
Inner Parts K0110-003001 516
Mounting K0110-003002 517
Operator's Seat (Grammer, With Joystick Steering System) ..... (X25-0973970)
Inner Parts (1/2) K0110-002001 518
Inner Parts (2/2) K0110-002002 519
Mounting K0110-002003 520
Protector K0110-002004 521
Console (1/2) K0110-002005 522
Console (2/2) K0110-002006 523
Cover K0110-002007 525
Armrest K0110-002008 526
Operator's Seat (Air Suspension Type, Deluxe Type, Lumbar Support) ..... (X25-0879570)
Inner Parts K0110-001001 527
Mounting K0110-001002 528
Seat Belt (50mm, 2-point Type, Suspension Type Grammer Operator's Seat) ..... (X25-0555860)
K0160-005001 529
Seat Belt (50mm, 2-point Type, Suspension Type Operator's Seat, With Operator's Seat, Suspension Type, Reclining) ..... (X25-0083380)
K0160-001001 530
Seat Belt (50mm, 2-point Type, Suspension Type Operator's Seat, With Operator's Seat, Air Suspension Type, Deluxe Type, Lumbar Support) ..... (X25-0378840)
K0160-003001 531
Seat Belt (78mm, 2-point Type, Suspension Type Operator's Seat) ..... (X25-0275740)
K0160-002001 532
Seat Belt (78mm, 2-point Type, Suspension Type Grammer Operator's Seat) ..... (X25-0841461)
K0160-006001 533
Seat Belt (78mm, 2-point, Retractable Type, Suspension Type Operator's Seat) ..... (X25-0407310)
K0160-004001 534

ROPS Cab (L.H. Door Sash Window) ..... (X25-1226931)
Body K0210-024001 535
Door, L.H. K0210-024002 536
Door Lock, L.H. K0210-024003 538
Door Knob, L.H. K0210-024004 540
Door, R.H. K0210-024005 542
Glass Window K0210-024006 543
Wiper K0210-024007 544
Interior K0210-024008 545
Sunvisor K0210-024009 546
Antenna K0210-024010 547
Rubber Antenna Mounting and Speaker K0210-024011 548
Mark and Plate K0210-024012 549
Front Cover, Switch and Monitor K0210-024013 550
Cup Holder, Cigarette Lighter and Ashtray K0210-024014 551
Wiring Harness K0210-024015 552
Cap K0210-024016 554
Air Conditioner Duct K0210-024017 555
Air Conditioner Unit K0210-024018 556
Air Conditioner Related Parts K0210-024019 558
Blower K0210-024020 559
Blower Mounting and Control Panel K0210-024021 561
Air Conditioner Filter K0210-024022 562
Air Conditioner Cover K0210-024023 563
Brake Pedal K0210-024024 564
Accelerator Pedal Mounting (1/2) K0210-024025 565
Accelerator Pedal K0210-024026 566
Accelerator Pedal Mounting (2/2) K0210-024027 567
Transmission Control Switch K0210-024028 568
Steering Column Mounting K0210-024029 569
Wiper Switch K0210-024030 570
Steering Column K0210-024031 571
Mounting (1/2) K0210-024032 572
Steering Column Cover K0210-024033 573
Orbitrol Valve K0210-024034 574
Tee and Union K0210-024035 575
Electric Parts K0210-024036 576
Floor Wiring Harness (1/2) K0210-024037 578
Floor Wiring Harness (2/2) K0210-024038 580
Brake Valve K0210-024039 582
Main Monitor K0210-024040 583
Washer Hose K0210-024041 584
Air Conditioner Piping K0210-024042 585
Heater Piping K0210-024043 586
Mounting (2/2) K0210-024044 587
Rearview Mirror K0210-024045 588
ROPS Cab (L.H. Door Sash Window, With Auto Air Conditioner) ..... (X25-1263051)
Body K0210-024001 535
Door, L.H. K0210-024002 536
Door Lock, L.H. K0210-024003 538
Door Knob, L.H. K0210-024004 540
Door, R.H. K0210-024005 542
Glass Window K0210-024006 543
Wiper K0210-024007 544
Interior K0210-024008 545
Sunvisor K0210-024009 546
Antenna K0210-024010 547

Rubber Antenna Mounting and Speaker K0210-024011 548
Mark and Plate K0210-024012 549
Front Cover, Switch and Monitor K0210-024013 550
Cup Holder, Cigarette Lighter and Ashtray K0210-024014 551
Wiring Harness K0210-024015 552
Cap K0210-026016 589
Air Conditioner Duct K0210-026017 590
Inner Parts, Air Conditioner Unit K0210-026018 591
Air Conditioner Unit Mounting K0210-026019 593
Blower K0210-026020 594
Blower Mounting and Control Panel K0210-026021 596
Air Conditioner Filter K0210-024022 562
Air Conditioner Cover K0210-024023 563
Sensor K0210-026024 597
Brake Pedal K0210-024024 564
Accelerator Pedal Mounting (1/2) K0210-024025 565
Accelerator Pedal K0210-024026 566
Accelerator Pedal Mounting (2/2) K0210-024027 567
Transmission Control Switch K0210-024028 568
Steering Column Mounting K0210-024029 569
Wiper Switch K0210-024030 570
Steering Column K0210-024031 571
Mounting (1/2) K0210-024032 572
Steering Column Cover K0210-024033 573
Orbitrol Valve K0210-024034 574
Tee and Union K0210-024035 575
Electric Parts K0210-024036 576
Floor Wiring Harness (1/2) K0210-024037 578
Floor Wiring Harness (2/2) K0210-024038 580
Brake Valve K0210-024039 582
Main Monitor K0210-024040 583
Washer Hose K0210-024041 584
Air Conditioner Piping K0210-024042 585
Heater Piping K0210-024043 586
Mounting (2/2) K0210-024044 587
Rearview Mirror K0210-024045 588
ROPS Cab (Both Sash Window) ..... (X25-1241251)
Body K0210-024001 535
Door, L.H. K0210-024002 536
Door Lock, L.H. K0210-024003 538
Door Knob, L.H. K0210-024004 540
Door, R.H. K0210-025005 598
Door Lock, R.H. K0210-025006 600
Glass Window K0210-024006 543
Wiper K0210-024007 544
Interior K0210-024008 545
Sunvisor K0210-024009 546
Antenna K0210-024010 547
Rubber Antenna Mounting and Speaker K0210-024011 548
Mark and Plate K0210-025013 601
Front Cover, Switch and Monitor K0210-024013 550
Cup Holder, Cigarette Lighter and Ashtray K0210-024014 551
Wiring Harness K0210-024015 552
Cap K0210-026016 589
Air Conditioner Duct K0210-024017 555
Air Conditioner Unit K0210-024018 556
Air Conditioner Related Parts K0210-024019 558

Blower K0210-024020 559
Blower Mounting and Control Panel K0210-024021 561
Air Conditioner Filter K0210-024022 562
Air Conditioner Cover K0210-024023 563
Brake Pedal K0210-024024 564
Accelerator Pedal Mounting (1/2) K0210-024025 565
Accelerator Pedal K0210-024026 566
Accelerator Pedal Mounting (2/2) K0210-024027 567
Transmission Control Switch K0210-024028 568
Steering Column Mounting K0210-024029 569
Wiper Switch K0210-024030 570
Steering Column K0210-024031 571
Mounting (1/2) K0210-024032 572
Steering Column Cover K0210-024033 573
Orbitrol Valve K0210-024034 574
Tee and Union K0210-024035 575
Electric Parts K0210-024036 576
Floor Wiring Harness (1/2) K0210-024037 578
Floor Wiring Harness (2/2) K0210-024038 580
Brake Valve K0210-024039 582
Main Monitor K0210-024040 583
Washer Hose K0210-024041 584
Air Conditioner Piping K0210-024042 585
Heater Piping K0210-024043 586
Mounting (2/2) K0210-024044 587
Rearview Mirror K0210-024045 588
ROPS Cab (Both Sash Window, For EU Safety Regulation) ..... (X25-1830591)
Body K0210-024001 535
Door, L.H. K0210-024002 536
Door Lock, L.H. K0210-024003 538
Door Knob, L.H. K0210-024004 540
Door, R.H. K0210-025005 598
Door Lock, R.H. K0210-025006 600
Glass Window K0210-024006 543
Wiper K0210-024007 544
Interior K0210-024008 545
Sunvisor K0210-024009 546
Antenna K0210-024010 547
Rubber Antenna Mounting and Speaker K0210-024011 548
Mark and Plate K0210-024012 549
Front Cover, Switch and Monitor K0210-024013 550
Cup Holder, Cigarette Lighter and Ashtray K0210-024014 551
Wiring Harness K0210-024015 552
Cap K0210-026016 589
Air Conditioner Duct K0210-024017 555
Air Conditioner Unit K0210-024018 556
Air Conditioner Related Parts K0210-024019 558
Blower K0210-024020 559
Blower Mounting and Control Panel K0210-024021 561
Air Conditioner Filter K0210-024022 562
Air Conditioner Cover K0210-024023 563
Brake Pedal K0210-024024 564
Accelerator Pedal Mounting (1/2) K0210-024025 565
Accelerator Pedal K0210-024026 566
Accelerator Pedal Mounting (2/2) K0210-024027 567
Transmission Control Switch K0210-024028 568
Steering Column Mounting K0210-024029 569

Wiper Switch K0210-024030 570
Steering Column K0210-024031 571
Mounting (1/2) K0210-024032 572
Steering Column Cover K0210-024033 573
Orbitrol Valve K0210-024034 574
Tee and Union K0210-024035 575
Electric Parts K0210-024036 576
Floor Wiring Harness (1/2) K0210-024037 578
Floor Wiring Harness (2/2) K0210-024038 580
Brake Valve K0210-024039 582
Main Monitor K0210-024040 583
Washer Hose K0210-024041 584
Air Conditioner Piping K0210-024042 585
Heater Piping K0210-024043 586
Mounting (2/2) K0210-024044 587
Rearview Mirror K0210-024045 588
ROPS Cab (Both Sash Window, With Auto Air Conditioner) ..... (X25-1226801)
Body K0210-024001 535
Door, L.H. K0210-024002 536
Door Lock, L.H. K0210-024003 538
Door Knob, L.H. K0210-024004 540
Door, R.H. K0210-025005 598
Door Lock, R.H. K0210-025006 600
Glass Window K0210-024006 543
Wiper K0210-024007 544
Interior K0210-024008 545
Sunvisor K0210-024009 546
Antenna K0210-024010 547
Rubber Antenna Mounting and Speaker K0210-024011 548
Mark and Plate K0210-025013 601
Front Cover, Switch and Monitor K0210-024013 550
Cup Holder, Cigarette Lighter and Ashtray K0210-024014 551
Wiring Harness K0210-024015 552
Cap K0210-026016 589
Air Conditioner Duct K0210-026017 590
Inner Parts, Air Conditioner Unit K0210-026018 591
Air Conditioner Unit Mounting K0210-026019 593
Blower K0210-026020 594
Blower Mounting and Control Panel K0210-026021 596
Air Conditioner Filter K0210-024022 562
Air Conditioner Cover K0210-024023 563
Sensor K0210-026024 597
Brake Pedal K0210-024024 564
Accelerator Pedal Mounting (1/2) K0210-024025 565
Accelerator Pedal K0210-024026 566
Accelerator Pedal Mounting (2/2) K0210-024027 567
Transmission Control Switch K0210-024028 568
Steering Column Mounting K0210-024029 569
Wiper Switch K0210-024030 570
Steering Column K0210-024031 571
Mounting (1/2) K0210-024032 572
Steering Column Cover K0210-024033 573
Orbitrol Valve K0210-024034 574
Tee and Union K0210-024035 575
Electric Parts K0210-024036 576
Floor Wiring Harness (1/2) K0210-024037 578
Floor Wiring Harness (2/2) K0210-024038 580

Brake Valve K0210-024039 582
Main Monitor K0210-024040 583
Washer Hose K0210-024041 584
Air Conditioner Piping K0210-024042 585
Heater Piping K0210-024043 586
Mounting (2/2) K0210-024044 587
Rearview Mirror K0210-024045 588
Floor Mat (Without Joystick Steering System) ..... (X25-0879660)
K0310-001001 602
Floor Mat (With Joystick Steering System) ..... (X25-0966470)
K0310-002001 603
Window Washer Tank ..... (X25-0184813)
K0350-001001 604
Air Conditioner Related Parts (With Monocoque Type ROPS Cab, Monocoque Type ROPS Cab, Both Sash Window) ..... (X25-1226810)
Compressor K0711-004001 605
Piping (1/2) K0711-004002 606
Piping (2/2) K0711-004003 607
Heater Piping ..... (X25-1226590)
Front K0713-002001 608
Rear K0713-002002 609
Cooler and Heater Box (With Cooler and Heater Box) ..... (X25-0702053)
K0714-001001 610
Cooler and Heater Without Box (Without Cooler and Heater Box) ..... (X25-0879610)
K0714-002001 611
Radio (AM-FM Radio, North America) ..... (X25-0851850)
K0810-005001 612
Radio (AM-FM Radio, Europe and Asia) ..... (X25-0536390)
K0810-002001 613
Radio (AM-FM Stereo Radio, Cassette, North America) ..... (X25-0536400)
K0810-003001 614
Radio (AM-FM Stereo Radio, Cassette, Europe and Asia) ..... (X25-0888730)
K0810-006001 615
Parts For Less Radio (Without AM-FM Radio) ..... (X25-0595340)
K0810-004001 616
Floor Support ..... (X25-0879710)
K4100-001001 617
Loader Control Unit (With Multi-function Mono Lever) ..... (X25-1242310)
Console Slider K4202-022001 618
Inner Parts, PPC Valve K4202-022002 619
Lever K4202-022003A 620
Wiring Harness K4202-022004 621
Cover K4202-022005 622
Armrest K4202-022006 623
PPC Piping (1/3) K4202-022007 624
PPC Piping (2/3) K4202-022008 626
PPC Piping (3/3) K4202-022009 627
Switch Box K4202-022010 629
Loader Control Unit (With Multi-function Mono Lever and 1-lever Attachment Control) ..... (X25-1242300)
Console Slider K4202-022001 618
Inner Parts, PPC Valve (1/2) K4202-022002 619
Lever K4202-025003A 630
Inner Parts, PPC Valve (2/2) K4202-025004 631
PPC Valve Mounting K4202-025005 632
Wiring Harness K4202-025006 633
Cover K4202-025007 634
Armrest K4202-022006 623

PPC Piping (1/3) K4202-025009 635
PPC Piping (2/3) K4202-025010 637
PPC Piping (3/3) K4202-025011 638
Switch Box K4202-022010 629
Loader Control Unit (With 2-lever Loader Control) ..... (X25-1226820)
Console Slider K4202-015001 640
Inner Parts, PPC Valve K4202-015002 641
Lever K4202-015003 642
Cover K4202-015004 644
Armrest K4202-015005 645
PPC Piping (1/2) K4202-015006 646
PPC Piping (2/2) K4202-015007 648
Switch Box K4202-022010 629
Loader Control Unit (With 2-lever Loader Control, Forward Reverse Switch) ..... (X25-1226940)
Console Slider K4202-015001 640
Inner Parts, PPC Valve K4202-015002 641
Lever K4202-016003 649
Cover K4202-015004 644
Armrest K4202-015005 645
PPC Piping (1/2) K4202-015006 646
PPC Piping (2/2) K4202-015007 648
FNR Selector Switch K4202-016008 651
Switch Box K4202-022010 629
Loader Control Unit (With 2-lever Loader Control, Joystick Steering System) ..... (X25-1238850)
Console Slider K4202-015001 640
Inner Parts, PPC Valve K4202-015002 641
Lever K4202-015003 642
Cover K4202-015004 644
Armrest K4202-015005 645
PPC Piping (1/2) K4202-017006 652
PPC Piping (2/2) K4202-015007 648
Switch Box K4202-022010 629
Solenoid Valve and Wiring Harness K4202-017009 654
Additional Wiring Harness K4202-017010 655
Loader Control Unit (With 2-lever Loader Control and 1-lever Attachment Control) ..... (X25-1238870)
Console Slider K4202-018001 656
Inner Parts, PPC Valve (1/2) K4202-015002 641
Lever (1/2) K4202-018003 657
Inner Parts, PPC Valve (2/2) K4202-018004 659
Lever (2/2) K4202-018005 660
Cover K4202-015004 644
Armrest K4202-015005 645
PPC Piping (1/2) K4202-018008 661
PPC Piping (2/2) K4202-018009 663
Switch Box K4202-022010 629
Loader Control Unit (With 2-lever Loader Control and 1-lever Attachment Control, Forward Reverse Switch) ..... (X25-1238880)
Console Slider K4202-018001 656
Inner Parts, PPC Valve (1/2) K4202-015002 641
Lever (1/2) K4202-019003 665
Inner Parts, PPC Valve (2/2) K4202-018004 659
Lever (2/2) K4202-019005 667
Cover K4202-015004 644
Armrest K4202-015005 645
PPC Piping (1/2) K4202-018008 661
PPC Piping (2/2) K4202-018009 663
FNR Selector Switch K4202-019010 668

Switch Box K4202-022010 629
Loader Control Unit (With 2-lever Loader Control and 1-lever Attachment Control, Joystick Steering System) ..... (X25-1238900)
Console Slider K4202-018001 656
Inner Parts, PPC Valve (1/2) K4202-015002 641
Lever (1/2) K4202-018003 657
Inner Parts, PPC Valve (2/2) K4202-018004 659
Lever (2/2) K4202-018005 660
Cover K4202-015004 644
Armrest K4202-015005 645
PPC Piping (1/2) K4202-021008 669
PPC Piping (2/2) K4202-021009 670
Switch Box K4202-022010 629
Solenoid Valve and Wiring Harness K4202-017009 654
Additional Wiring Harness K4202-017010 655
Steering Controller (With Joystick Steering System) ..... (X25-0975830)
K4204-001001 672
Switch (With Low Idle Up Switch) ..... (X25-1934810)
K4205-019001 673
Switch (With Torque Converter, Lockup Type) ..... (X25-1310900)
K4205-018001 674
Switch (With Automatic Reversible Cooling Fan) ..... (X25-1444190)
K4205-017001 675
Switch (With ECSS) ..... (X25-0880020)
K4205-001001 676
Switch (With ECSS, Torque Converter, Lockup Type) ..... (X25-0889240)
K4205-002001 677
Switch (With ECSS, Torque Converter, Lockup Type, Automatic Reversible Cooling Fan) ..... (X25-1031040)
K4205-011001 678
Switch (With ECSS, Automatic Reversible Cooling Fan) ..... (X25-0964700)
K4205-008001 679
Switch (With ECSS, Automatic Reversible Cooling Fan, Without Multi-function Mono Lever, Forward Reverse Switch) ..... (X25-0907640)
K4205-003001 680
Switch (With ECSS, Emergency Steering, Automatic Control Type) ..... (X25-0933980)
K4205-006001 681
Switch (With ECSS, Emergency Steering, Automatic Control Type, Without Multi-function Mono Lever, Forward Reverse Switch) ..... (X25-0927000)
K4205-004001 682
Switch (With ECSS, Emergency Steering, Automatic Control Type, Torque Converter, Lockup Type) ... (X25-0927070)
K4205-005001 683
Switch (With ECSS, Emergency Steering, Automatic Control Type, Torque Converter, Lockup Type, Automatic Reversible Cooling Fan) ..... (X25-1260700)
K4205-016001 684
Switch (With ECSS, Emergency Steering, Automatic Control Type, Torque Converter, Lockup Type, Automatic Reversible Cooling Fan, Without Multi-function Mono Lever, Forward Reverse Switch) ..... (X25-0967390)
K4205-009001 685
Switch (With ECSS, Emergency Steering, Automatic Control Type, Automatic Reversible Cooling Fan) (X25-1014470)
K4205-010001 686
Switch (With ECSS, Emergency Steering, Automatic Control Type, Automatic Reversible Cooling Fan, Without Multi-function Mono Lever, Forward Reverse Switch) ..... (X25-0947020)
K4205-007001 687
KOMTRAX Less ..... (X25-2247980)
K4208-004001 688
KOMTRAX Controller ..... (X25-2247930)
K4208-002001 689

KOMTRAX Controller (GPRS) ..... (X25-2279570)
K4208-005001 690
Steering Wheel ..... (X25-0879730)
K4211-001001 691
Rear Console Cover (Without Printer Type Payload Meter) ..... (X25-0804643)
Cover K4212-001001 692
Electric Converter For 12volt Power Source ..... (X25-0702072)
K4409-001001 693
Brake Control (With Orbitrol Steering System) ..... (X25-1226830)
Bracket K4460-007001 694
Accumulator K4460-007002A 695
Mounting and Piping K4460-007003 696
PPC Piping K4460-007004 697
Accumulator Charge Valve K4460-007005 698
Accumulator Charge Valve Mounting K4460-007006 699
Cover K4460-007007 701
Mounting K4460-007008 702
Brake Valve Piping, Front K4460-007009 703
Brake Valve Piping, Drain (1/2) K4460-007010 705
Brake Valve Piping, Drain (2/2) K4460-007011 706
Brake Control (With Joystick Steering System) ..... (X25-1241560)
Bracket K4460-007001 694
Accumulator K4460-007002A 695
Mounting and Piping K4460-007003 696
PPC Piping K4460-007004 697
Accumulator Charge Valve K4460-007005 698
Accumulator Charge Valve Mounting K4460-007006 699
Cover K4460-007007 701
Mounting K4460-008008 707
Brake Valve Piping, Front K4460-007009 703
Brake Valve Piping, Drain (1/2) K4460-007010 705
Brake Valve Piping, Drain (2/2) K4460-007011 706
Brake Control (With Orbitrol Steering System, Brake Oil Cooling System) ..... (X25-1760100)
Bracket K4460-007001 694
Accumulator K4460-009002A 708
Mounting and Piping K4460-007003 696
PPC Piping K4460-007004 697
Accumulator Charge Valve K4460-007005 698
Accumulator Charge Valve Mounting K4460-007006 699
Cover K4460-007007 701
Mounting K4460-007008 702
Brake Valve Piping, Front K4460-009009 709
Brake Valve Piping, Drain (1/2) K4460-007010 705
Brake Valve Piping, Drain (2/2) K4460-007011 706
Inner Parts, Gear Pump (1/2) K4460-009012 711
Inner Parts, Gear Pump (2/2) K4460-009013 712
Motor Related Parts K4460-009014 713
Priority Valve K4460-009015 715
Hose and Bracket K4460-009016 716
Strainer K4460-009017 717
Hose K4460-009018 718
Suction Piping K4460-009019 720
Oil Cooler K4460-009020 721
Cooling Piping, Rear K4460-009021 722
Cooling Piping, Front (1/2) K4460-009022 723
Cooling Piping, Front (2/2) K4460-009023 724

Brake Piping (Without Brake Oil Cooling System) ..... (X25-1393290)
Front Axle Piping K4470-003001 726
Rear Axle Piping K4470-003002 727
Brake Piping (With Brake Oil Cooling System) ..... (X25-1760440)
Front Axle Piping K4470-003001 726
Rear Axle Piping K4470-004002 728
Bucket Positioner (Without Log Grapple) ..... (X25-0292051)
K4504-001001 729
Bucket Positioner (With Log Grapple) ..... (X25-0444070)
K4504-002001 730
GUARDS AND COVERS
Hood (Air Intake Extension, Cap Type) ..... (X25-1226840)
Hood and Frame M4100-020001 732
Lower Cover M4100-020002 733
Air Cleaner Cover M4100-020003 735
Baffle (1/2) M4100-020004 736
Door and Gas Spring M4100-020005 737
Sheet (1/4) M4100-020006 739
Baffle (2/2) M4100-020007 740
Mounting M4100-020008 742
Air Cleaner Cap M4100-020009 743
Sheet (2/4) M4100-020010 744
Rear Grille M4100-020011 745
Sheet (3/4) M4100-020012 747
Sheet (4/4) M4100-020013 748
Cap M4100-020014 749
Hood (Air Intake Extension, Cap Type, With Rear Full Fender) ..... (X25-1227260)
Hood and Frame M4100-022001 750
Lower Cover M4100-020002 733
Air Cleaner Cover M4100-020003 735
Baffle (1/2) M4100-020004 736
Door and Gas Spring M4100-022005 751
Sheet (1/4) M4100-020006 739
Baffle (2/2) M4100-020007 740
Mounting M4100-020008 742
Air Cleaner Cap M4100-020009 743
Sheet (2/4) M4100-020010 744
Rear Grille M4100-020011 745
Sheet (3/4) M4100-020012 747
Sheet (4/4) M4100-020013 748
Hood (Air Intake Extension, Cap Type, For EU Safety Regulation) ..... (X25-1652870)
Hood and Frame M4100-020001 732
Lower Cover M4100-020002 733
Air Cleaner Cover M4100-020003 735
Baffle (1/2) M4100-033004 753
Door and Gas Spring M4100-020005 737
Sheet (1/4) M4100-020006 739
Baffle (2/2) M4100-033007 754
Mounting M4100-020008 742
Air Cleaner Cap M4100-020009 743
Sheet (2/4) M4100-020010 744
Rear Grille M4100-020011 745
Sheet (3/4) M4100-020012 747
Sheet (4/4) M4100-020013 748
Cap M4100-020014 749
Hood (Air Intake Extension, Cap Type, With Rear Full Fender, For EU Safety Regulation) ..... (X25-1653750)
Hood and Frame M4100-022001 750

Lower Cover M4100-020002 733
Air Cleaner Cover M4100-020003 735
Baffle (1/2) M4100-033004 753
Door and Gas Spring M4100-022005 751
Sheet (1/4) M4100-020006 739
Baffle (2/2) M4100-033007 754
Mounting M4100-020008 742
Air Cleaner Cap M4100-020009 743
Sheet (2/4) M4100-020010 744
Rear Grille M4100-020011 745
Sheet (3/4) M4100-020012 747
Sheet (4/4) M4100-020013 748
Hood (Air Intake Extension, Pre-cleaner Type) ..... (X25-1241860)
Hood and Frame M4100-020001 732
Lower Cover M4100-020002 733
Air Cleaner Cover M4100-025003 756
Baffle (1/2) M4100-020004 736
Door and Gas Spring M4100-020005 737
Sheet (1/4) M4100-020006 739
Baffle (2/2) M4100-020007 740
Mounting M4100-020008 742
Pre-Cleaner M4100-025009A 757
Sheet (2/4) M4100-020010 744
Rear Grille M4100-020011 745
Sheet (3/4) M4100-020012 747
Sheet (4/4) M4100-020013 748
Cap M4100-020014 749
Hood (Air Intake Extension, Pre-cleaner Type, With Rear Full Fender) ..... (X25-1304430)
Hood and Frame M4100-022001 750
Lower Cover M4100-020002 733
Air Cleaner Cover M4100-025003 756
Baffle (1/2) M4100-020004 736
Door and Gas Spring M4100-022005 751
Sheet (1/4) M4100-020006 739
Baffle (2/2) M4100-020007 740
Mounting M4100-020008 742
Pre-Cleaner M4100-025009A 757
Sheet (2/4) M4100-020010 744
Rear Grille M4100-020011 745
Sheet (3/4) M4100-020012 747
Sheet (4/4) M4100-020013 748
Hood (Air Intake Extension, Pre-cleaner Type, For EU Safety Regulation) ..... (X25-1653840)
Hood and Frame M4100-020001 732
Lower Cover M4100-020002 733
Air Cleaner Cover M4100-025003 756
Baffle (1/2) M4100-033004 753
Door and Gas Spring M4100-020005 737
Sheet (1/4) M4100-020006 739
Baffle (2/2) M4100-033007 754
Mounting M4100-020008 742
Pre-Cleaner M4100-025009A 757
Sheet (2/4) M4100-020010 744
Rear Grille M4100-020011 745
Sheet (3/4) M4100-020012 747
Sheet (4/4) M4100-020013 748
Cap M4100-020014 749

Hood (Air Intake Extension, Pre-cleaner Type, With Rear Full Fender, For EU Safety Regulation) .....(X25-1654090)
Hood and Frame M4100-022001 750
Lower Cover M4100-020002 733
Air Cleaner Cover M4100-025003 756
Baffle (1/2) M4100-033004 753
Door and Gas Spring M4100-022005 751
Sheet (1/4) M4100-020006 739
Baffle (2/2) M4100-033007 754
Mounting M4100-020008 742
Pre-Cleaner M4100-025009A 757
Sheet (2/4) M4100-020010 744
Rear Grille M4100-020011 745
Sheet (3/4) M4100-020012 747
Sheet (4/4) M4100-020013 748
Hood (Air Intake Extension, Pre-cleaner Turbo 2 Type) .....(X25-1269760)
Hood and Frame M4100-020001 732
Lower Cover M4100-020002 733
Air Cleaner Cover M4100-020003 735
Baffle (1/2) M4100-020004 736
Door and Gas Spring M4100-020005 737
Sheet (1/4) M4100-020006 739
Baffle (2/2) M4100-020007 740
Mounting M4100-020008 742
Pre-Cleaner M4100-027009 758
Sheet (2/4) M4100-020010 744
Rear Grille M4100-020011 745
Sheet (3/4) M4100-020012 747
Sheet (4/4) M4100-020013 748
Cap M4100-020014 749
Hood (Air Intake Extension, Pre-cleaner Turbo 2 Type, With Rear Full Fender) .....(X25-1269770)
Hood and Frame M4100-022001 750
Lower Cover M4100-020002 733
Air Cleaner Cover M4100-020003 735
Baffle (1/2) M4100-020004 736
Door and Gas Spring M4100-022005 751
Sheet (1/4) M4100-020006 739
Baffle (2/2) M4100-020007 740
Mounting M4100-020008 742
Pre-Cleaner M4100-027009 758
Sheet (2/4) M4100-020010 744
Rear Grille M4100-020011 745
Sheet (3/4) M4100-020012 747
Sheet (4/4) M4100-020013 748
Hood (Air Intake Extension, Pre-cleaner Turbo 2 Type, For EU Safety Regulation) .....(X25-1654070)
Hood and Frame M4100-020001 732
Lower Cover M4100-020002 733
Air Cleaner Cover M4100-020003 735
Baffle (1/2) M4100-033004 753
Door and Gas Spring M4100-020005 737
Sheet (1/4) M4100-020006 739
Baffle (2/2) M4100-033007 754
Mounting M4100-020008 742
Pre-Cleaner M4100-027009 758
Sheet (2/4) M4100-020010 744
Rear Grille M4100-020011 745
Sheet (3/4) M4100-020012 747
Sheet (4/4) M4100-020013 748

Cap M4100-020014 749
Hood (Air Intake Extension, Pre-cleaner Turbo 2 Type, With Rear Full Fender, For EU Safety Regulation) ..... (X25-1654080)
Hood and Frame M4100-022001 750
Lower Cover M4100-020002 733
Air Cleaner Cover M4100-020003 735
Baffle (1/2) M4100-033004 753
Door and Gas Spring M4100-022005 751
Sheet (1/4) M4100-020006 739
Baffle (2/2) M4100-033007 754
Mounting M4100-020008 742
Pre-Cleaner M4100-027009 758
Sheet (2/4) M4100-020010 744
Rear Grille M4100-020011 745
Sheet (3/4) M4100-020012 747
Sheet (4/4) M4100-020013 748
Fire Proof Net ..... (X25-1121430)
M4103-001001 759
Rear Fender ..... (X25-0799551)
Fender and Bracket M4200-001001 760
Rubber and Cover M4200-001002 761
Front Fender (With Wide Fender, Tire Stopper) ..... (X25-1280650)
M4210-007001 762
Front Fender (With Wide Fender) ..... (X25-1142830)
M4210-006001 763
Front Fender (Without Wide Fender) ..... (X25-0774621)
M4210-005001 764
Floor Cover (With Orbitrol Steering System, Joystick Steering System) ..... (X25-1226850)
M4230-005001 765
Ladder (With Auto-greasing System) ..... (X25-1270450)
Floor and Ladder L.H. M4310-005001 766
Floor and Ladder R.H. M4310-005002 767
Mounting M4310-005003 769
Ladder (Without Auto-greasing System) ..... (X25-1226650)
Floor and Ladder L.H. M4310-004001 770
Floor and Ladder R.H. M4310-005002 767
Mounting M4310-005003 769
Handrail (With Rear Full Fender) ..... (X25-0774651)
M4320-001001 771
Handrail (Without Rear Full Fender) ..... (X25-0923520)
M4320-002001 772
Mirror (Without Number Plate) ..... (X25-1226660)
Side Mirror M4410-004001 773
Under Mirror M4410-004002 774
Counterweight (1925kg, Additional Weight 380kg) ..... (X25-1227270)
M4510-016001 775
Counterweight (3025kg) ..... (X25-1227140)
M4510-014001 776
Counterweight (1925kg) ..... (X25-1226860)
M4510-012001 777
SUSPENSION, WHEEL AND THEIR RELATED PARTS
Rim (23.5-25 Tubeless Tires) ..... (X25-1040730)
S0110-002001 780
Rim (26.5-25 Tubeless Tires) ..... (X25-0804901)
S0110-001001 781
Rim (26.5-25 Tubed Tires) ..... (X25-1250850)
S0110-004001 782

Tire (23.5-25-20PR-L2 Tubeless Tires, Toyo) .....(X25-8039750)
S0120-016001 783
Tire (23.5-25-20PR-L2 Tubeless Tires, Yokohama) .....(X25-8039760)
S0120-017001 784
Tire (23.5-25-20PR-L2 Tubeless Tires, Bridgestone) .....(X25-8039740)
S0120-015001 785
Tire (23.5-25-20PR-L3 Tubeless Tires, Toyo) .....(X25-8039670)
S0120-011001 786
Tire (23.5-25-20PR-L3 Tubeless Tires, Yokohama) .....(X25-8039680)
S0120-012001 787
Tire (23.5-25-20PR-L3 Tubeless Tires, Bridgestone) .....(X25-8014720)
S0120-009001 788
Tire (23.5-R25-One Star-L3, Tubeless Tires) .....(X25-1142560)
S0120-008001 789
Tire (26.5-25-16PR-L3 Tubed Tires) .....(X25-8040140)
S0120-028001 790
Tire (26.5-25-16PR-L3 Tubeless Tires, Toyo) .....(X25-8039690)
S0120-013001 791
Tire (26.5-25-16PR-L3 Tubeless Tires, Yokohama) .....(X25-8039700)
S0120-014001 792
Tire (26.5-25-16PR-L3 Tubeless Tires, Bridgestone) .....(X25-8014730)
S0120-010001 793
Tire (26.5-25-20PR-L3 Tubeless Tires, Toyo) .....(X25-8039810)
S0120-018001 794
Tire (26.5-25-20PR-L3 Tubeless Tires, Bridgestone) .....(X25-8041590)
S0120-029001 795
Tire (26.5-25-20PR-L4 Tubeless Tires, Toyo) .....(X25-8039860)
S0120-022001 796
Tire (26.5-25-20PR-L4 Tubeless Tires, Yokohama) .....(X25-8039870)
S0120-023001 797
Tire (26.5-25-20PR-L4 Tubeless Tires, Bridgestone) .....(X25-8039850)
S0120-021001 798
Tire (26.5-25-20PR-L5 Tubeless Tires) .....(X25-8039920)
S0120-027001 799
Tire (23.5-25-24PR-L3 Tubeless Tires) .....(X25-8039840)
S0120-020001 800
Tire (26.5-25-24PR-L3 Tubeless Tires, Toyo) .....(X25-0071640)
S0120-002001 801
Tire (26.5-25-24PR-L3 Tubeless Tires, Bridgestone) .....(X25-0032410)
S0120-001001 802
Tire (26.5-R25-One Star-L3, Tubeless Tires) .....(X25-1073380)
S0120-006001 803
Tire (26.5-R25-One Star-L3, Tubeless Tires, XHA) .....(X25-0142150)
S0120-003001 804
Tire (26.5-R25-One Star-L3, Tubeless Tires, VMT) .....(X25-1142370)
S0120-007001 805
Tire (26.5-R25-Multi Star-L4 Tubeless Tires VSNTZ) .....(X25-1011680)
S0120-005001 806
WORK EQUIPMENT
Lift Arm and Bell Crank (With 2-Spool Control Valve) .....(X25-0774702)
Boom, Bell Crank and Link T4110-004001 808
Pin T4110-004002 809
Boom Kick-out T4110-004003 810
Lift Arm and Bell Crank (With 2-Spool Control Valve, Auto-greasing System) .....(X22-1687731)
Boom, Bell Crank and Link T4110-001001 811
Pin T4110-004002 809
Boom Kick-out T4110-004003 810

Lift Arm and Bell Crank (With 2-Spool Control Valve, Load Meter) .....(X25-0943101)
Boom, Bell Crank and Link T4110-005001 812
Pin T4110-004002 809
Boom Kick-out T4110-004003 810
Lift Arm and Bell Crank (With 3-Spool Control Valve) .....(X25-0952001)
Boom, Bell Crank and Link T4110-005001 812
Pin T4110-004002 809
Boom Kick-out T4110-004003 810
Boom Piping T4110-006004 813
Lift Arm and Bell Crank (With 3-Spool Control Valve, Auto-greasing System) .....(X25-1250591)
Boom, Bell Crank and Link T4110-001001 811
Pin T4110-004002 809
Boom Kick-out T4110-004003 810
Boom Piping T4110-006004 813
Lift Arm and Bell Crank (With Remote Greasing, Rear Axle, Steering Cylinder, Work Equipment) .....(X25-1137761)
Boom, Bell Crank and Link T4110-015001 814
Pin T4110-004002 809
Boom Kick-out T4110-004003 810
Bucket (Bolt On Cutting Edge 4.65m3, 3170mm Width, Loose Material) .....(X22-1685470)
T4120-001001 815
Bucket (4.2m3, Bolt On Cutting Edge 4.4m3, 3170mm Width, Loose Material) .....(X25-1242060)
T4120-021001 816
Bucket (3.9m3, Bolt On Cutting Edge 4.2m3, 3170mm Width) .....(X25-1226680)
T4120-017001 817
Bolt On Cutting Edge (Segment Edge) .....(X25-0204220)
T4122-005001 818
Bolt On Cutting Edge (Straight Edge) .....(X25-0301560)
T4122-006001 819
Bolt On Cutting Edge (Straight Edge, Long Life) .....(X25-0415320)
T4122-007001 820
Bolt On Cutting Edge (Straight Edge, Loose Material Bucket) .....(X25-0204200)
T4122-003001 821
Bucket Side Guard (For Side Edge) .....(X25-0182040)
T4125-001001 822
Bucket Side Guard (For Excavating) .....(X25-0367760)
T4125-002001 823
Bucket Tooth (Bolt-on Adapter and Tip Type, 9 Tooth) .....(X25-0204260)
T4130-005001 824
Bucket Tooth (Bolt-on Mono Cast Type, Limestone) .....(X25-0204250)
T4130-004001 825
Bucket Tooth (Bolt-on Mono Cast Type, 9 Tooth) .....(X25-0204240)
T4130-003001 826
Bucket Tooth (Bolt-on Mono Cast Type, Long Life) .....(X25-0204230)
T4130-002001 827
Lift Cylinder (With Tire Stopper, Without BMRC Bushing) .....(X25-1291140)
L.H. T4140-008001 828
R.H. T4140-008002 830
Piping T4140-008003 832
Pin T4140-008004 833
Lift Cylinder (Without BMRC Bushing) .....(X25-0774731)
L.H. T4140-008001 828
R.H. T4140-008002 830
Piping T4140-008003 832
Pin T4140-004004 834
Bucket Cylinder (Large Diameter Type) .....(X25-0774741)
Inner Parts T4150-004001 835
Mounting T4150-004002A 837

Bucket Cylinder (Large Diameter Type, Fork) ..... (X25-1147480)
Inner Parts T4150-009001 838
Mounting T4150-004002A 837
MARKS AND PLATES
Marks and Plates (English) ..... (X25-1226990)
Exterior U0100-017001 842
Interior U0100-017002 844
Marks and Plates (English, For EU Specification) ..... (X25-1226952)
Exterior U0100-030001 845
Interior U0100-030002 846
Marks and Plates (English, With Large Capacity Battery, For EU Specification) ..... (X25-2130950)
Exterior U0100-034001 847
Interior U0100-030002 846
Marks and Plates (English, For India CMVR Regulation Arrangement) ..... (X25-1621980)
Exterior U0100-033001 849
Interior U0100-017002 844
Marks and Plates (English, Text Type) ..... (X25-1251930)
Exterior U0100-021001 850
Interior U0100-021002 852
Marks and Plates (English, USA and Puerto Rico) ..... (X25-1226870)
Exterior U0100-015001 853
Interior U0100-021002 852
Marks and Plates (English, USA and Puerto Rico, For EPA Regulations TPEM) ..... (X25-1618340)
Exterior U0100-029001 855
Interior U0100-029002 857
Marks and Plates (Turkish-English) ..... (X25-1274852)
Exterior U0100-031001 858
Interior U0100-031002 860
Marks and Plates (Turkish-English, With Large Capacity Battery) ..... (X25-2130960)
Exterior U0100-035001 861
Interior U0100-031002 860
Marks and Plates (Spanish, Text Type) ..... (X25-1248340)
Exterior U0100-020001 863
Interior U0100-020002 864
KOMTRAX Plate ..... (X25-1675910)
U0205-001001 865
Hazard Level Plates (Australia Regulation) ..... (X25-2209220)
U0208-002001 866
ROPS Plate (English) ..... (X25-0879930)
U0605-001001 867
ROPS Plate (Spanish, Text Type) ..... (X25-0960430)
U0605-003001 868
ROPS Plate (For EU Safety Regulation) ..... (X25-1604321)
U0605-004001 869
AUXILIARY PARTS AND TOOL
Spare Parts ..... (X25-0976680)
V0100-001001 872
General Tool Set ..... (X25-0887180)
V0300-002001 873
General Tool Set (With Hammer) ..... (X25-0926560)
V0300-004001 874
General Tool Set (With Tire Stopper) ..... (X25-1292570)
V0300-011001 875
General Tool Set (With Tire Stopper, Without Tool Kit) ..... (X25-1290750)
V0300-009001 876
General Tool Set (With Tire Stopper, For Europe Specification) ..... (X25-1292560)
V0300-010001 877

General Tool Set (With Tire Stopper, Large Sized Cap and Overall) .....(X25-1324500)
V0300-013001 878
General Tool Set (With Tire Stopper, Large Sized Cap and Overall, Without Tool Kit) .....(X25-1324490)
V0300-012001 879
General Tool Set, Cap and Overall .....(X25-0926170)
V0300-003001 880
FIELD REPAIR SERVICE PARTS
Service Kit Parts .....(Y99-0000002)
KIT 882

ENGINE CYLINDER HEAD AND ITS RELATED PARTS

FIG. A1310-001001 Air Intake Manifold and Connection

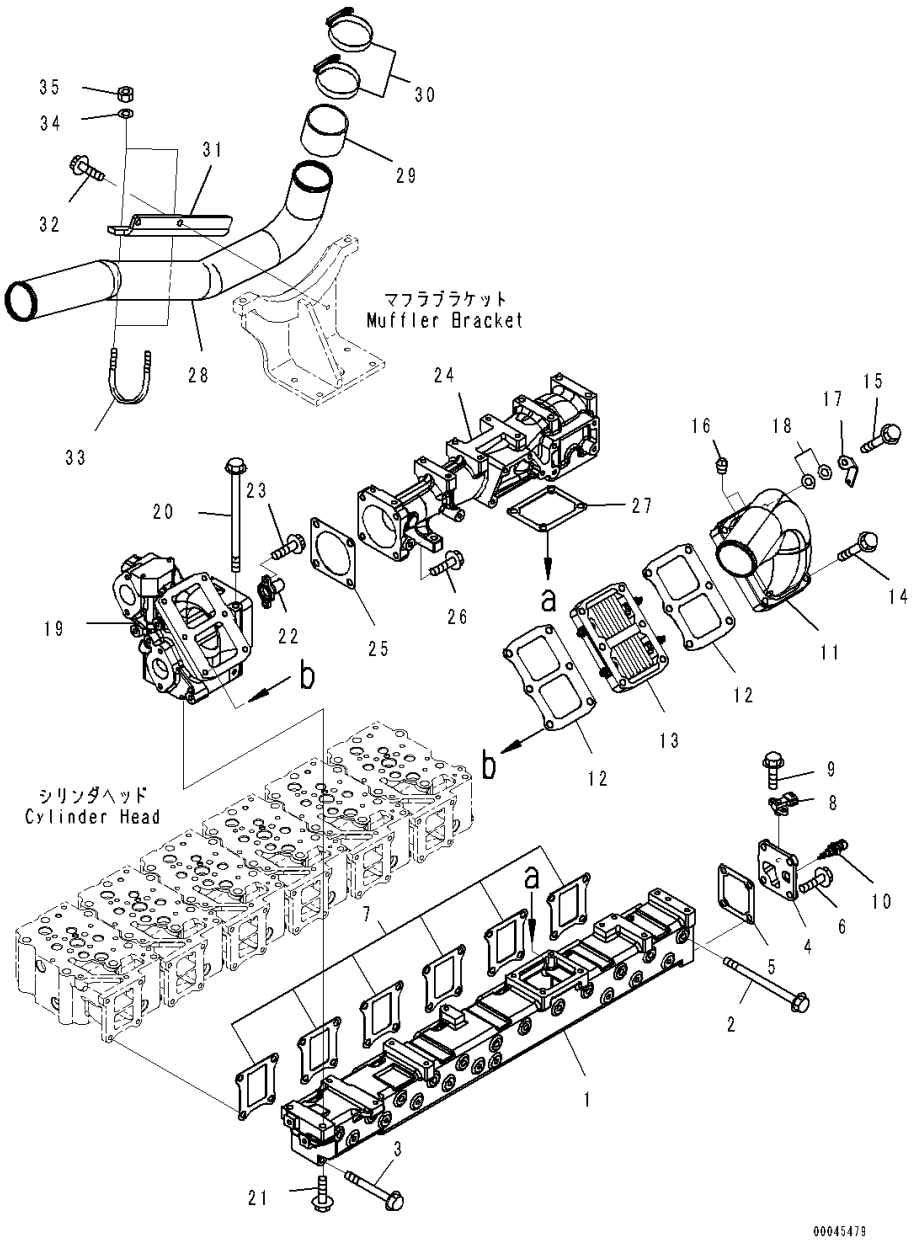

Index	Code	Part Number	Description	Qty	Serial Number
1		6251-11-4110	Manifold	1	567555-
2		01436-01030	Bolt	12	567555-
3		01435-01080	Bolt	12	567555-
4		6251-11-4250	Cover	1	567555-
5		6251-11-4260	Gasket	1	567555-
6		01435-01025	Bolt	2	567555-
7		6150-13-4810	Gasket	6	567555-
8		6261-81-2700	Sensor Assembly	1	567555-
		6261-81-2710	• Sensor, Boost Pressure	1	567555-
		6261-81-2720	• O-ring	1	567555-
9		01435-00616	Bolt	2	567555-
10		6560-61-7300	Sensor Assembly	1	567555-
		6560-61-7310	• Sensor, Intake Air Temperature	1	567555-
		6735-21-1930	• O-ring	1	567555-
11		6251-11-4340	Connector	1	567555-
12		6251-11-4830	Gasket	2	567555-
13		600-815-3812	Heater, Ribbon	1	567555-
14		01435-01070	Bolt	5	567555-
15		01435-01080	Bolt	1	567555-
16		07042-A0108	Plug	2	567555-
17		6251-81-4520	Plate	1	567555-
18		01643-31032	Washer	2	567555-
19		6251-11-7210	Housing, Air Junction	1	567555-
20		01436-01060	Bolt	2	567555-
21		01435-01040	Bolt	2	567555-
22		6251-11-9720	Nozzle, Venturi	1	567555-
23		01437-10816	Bolt	2	567555-
24		6251-11-7410	Connector	1	567555-
25		6251-11-7450	Gasket	1	567555-
26		01435-01035	Bolt	4	567555-
27		6251-11-4820	Gasket	1	567555-
28		6251-11-4140	Pipe	1	567555-
29		6151-11-4410	Hose	1	567555-
30		6152-12-4490	Clamp	2	567555-
31		6251-11-4150	Bracket	1	567555-
32		01435-01025	Bolt	2	567555-
33		07283-37663	Clip	2	567555-
34		01643-31032	Washer	4	567555-
35		01597-01009	Nut	4	567555-

FIG. A1010-001001 Cylinder Head

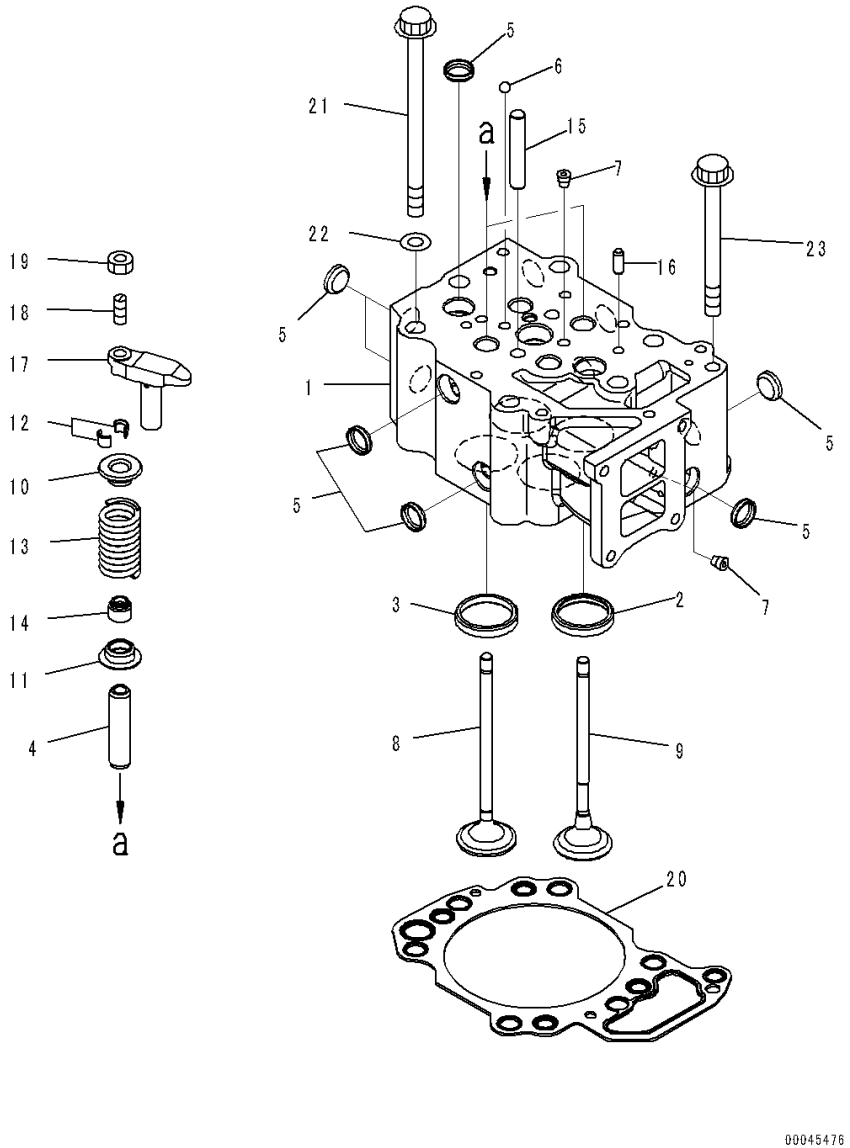

Index	Code	Part Number	Description	Qty	Serial Number
		6251-11-1200	Cylinder Head Assembly	6	572286-
1	C1		• Head, Cylinder	1	567555-
2		6150-11-1320	• Insert	2	567555-
		6150-19-1320	• Insert, Exhaust Valve, Oversize 0.25mm	2	567555-
		6150-18-1320	• Insert, Exhaust Valve, Oversize 0.50mm	2	567555-
		6150-17-1320	• Insert, Exhaust Valve, Oversize 0.75mm	2	567555-
		6150-16-1320	• Insert, Exhaust Valve, Oversize 1.00mm	2	567555-
3		6251-11-1380	• Insert	2	567555-
		6251-19-1380	• Insert	2	567555-
		6251-18-1380	• Insert	2	567555-
		6251-17-1380	• Insert	2	567555-
		6251-16-1380	• Insert	2	567555-
4		6150-12-1370	• Guide, Valve	4	567555-
5		6162-13-1150	• Plug, Expansion	11	567555-
6		04260-00793	• Ball	1	567555-
7		07043-70108	• Plug	3	567555-
8		6150-42-4110	Valve, Intake	12	567555-
9		6150-42-4210	Valve, Exhaust	12	567555-
10		6150-41-4510	Seat, Upper	24	567555-
11		6150-41-4430	Seat, Lower	24	567555-
12		6136-42-4520	Cotter, Valve	48	567555-
13		6251-41-4450	Spring, Valve	24	567555-
14		6150-41-4570	Seal, Valve Stem	24	567555-
15		6210-11-1140	Guide, Crosshead	12	567555-
16		04020-00820	Pin, Dowel	12	567555-
		6150-42-5600	Crosshead Assembly	12	567555-
17		6150-42-5610	• Crosshead	1	567555-
18		6150-41-5621	• Screw	1	567555-
19		6150-41-5630	• Nut	1	567555-
20		6251-11-1810	Gasket, Cylinder Head	6	567555-
		6251-19-1810	Gasket, Cylinder Head, Oversize 0.4mm .	6	567555-
	C1		• Grommet, Oil	4	567555-
	C1		• Grommet, Oil, Oversize 0.4mm	4	567555-
	C1		• Grommet, Oil	1	567555-
	C1		• Grommet, Oil, Oversize 0.4mm	1	567555-
	C1		• Grommet, Water	1	567555-
	C1		• Grommet, Water, Oversize 0.4mm	1	567555-
	C1		• Grommet, Water	5	567555-
	C1		• Grommet, Water, Oversize 0.4mm	5	567555-
	C1		• Grommet, Water	1	567555-

FIG. A1010-001001 Cylinder Head

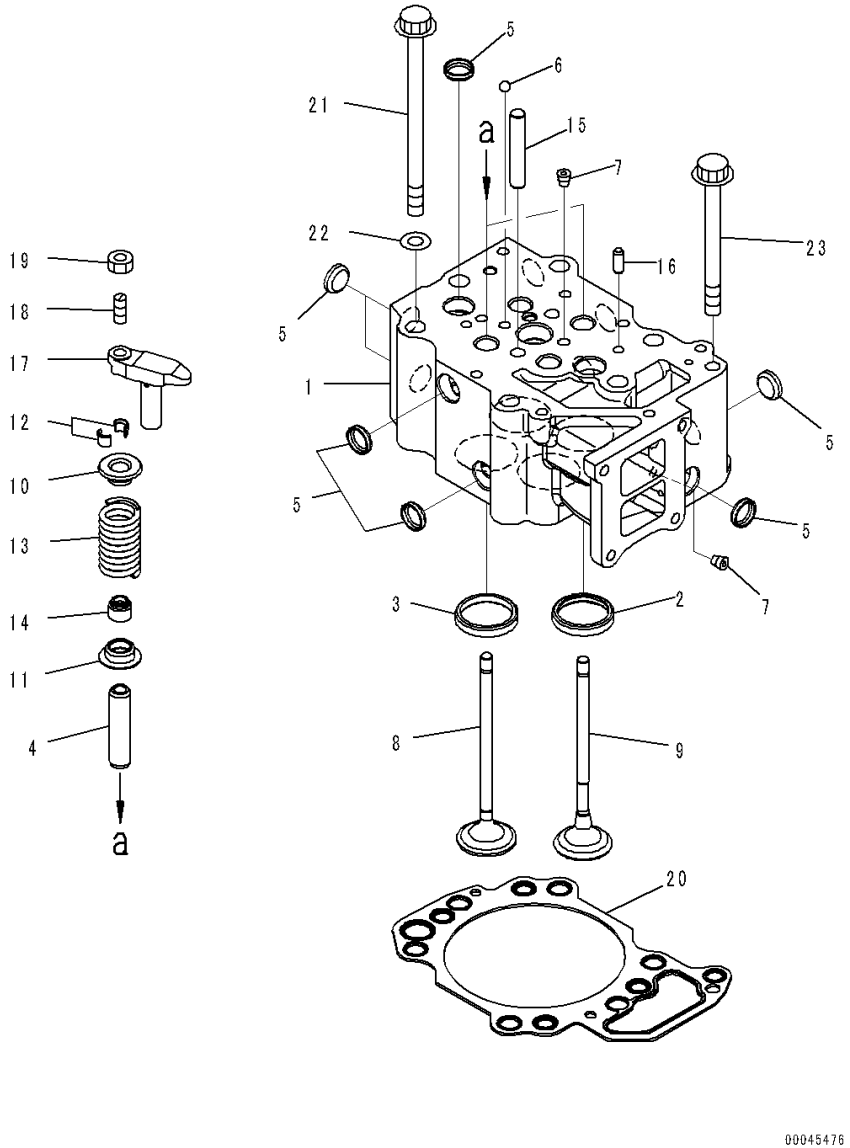

Index	Code	Part Number	Description	Qty	Serial Number
	C1		• Grommet, Water, Oversize 0.4mm	1	567555-
21		6150-11-1620	Bolt	36	567555-
22		6164-31-3330	Washer	36	567555-
23		01438-01020	Bolt	6	567555-

FIG. A1510-001001 Exhaust Manifold

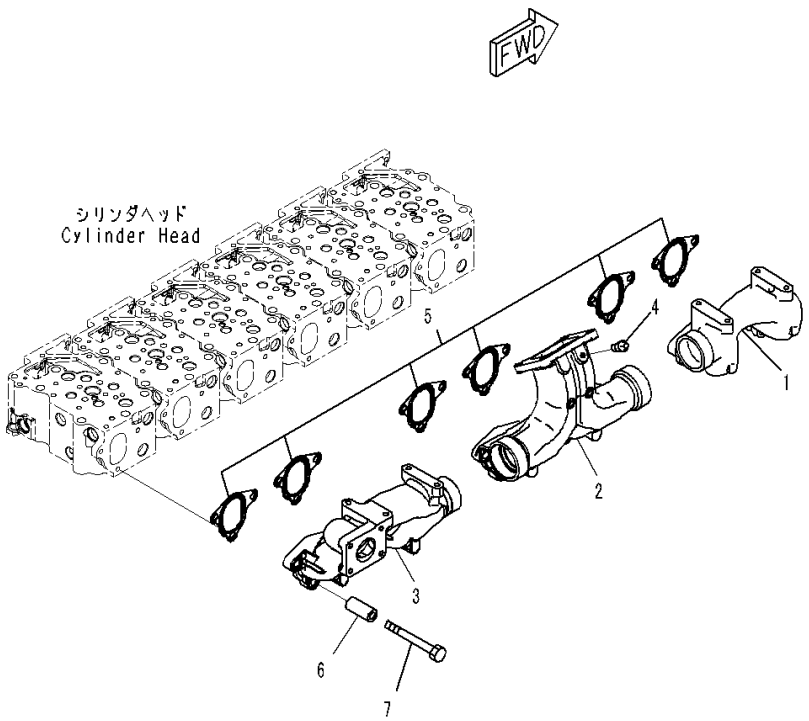

Index	Code	Part Number	Description	Qty	Serial Number
1		6151-11-5110	Manifold, Front	1	567555-
2		6251-11-5140	Manifold, Center	1	567555-
3		6251-11-5130	Manifold, Rear	1	567555-
4		6215-11-5920	Plug	1	567555-
5		6152-15-5830	Gasket	6	567555-
6		6134-11-5120	Spacer	18	567555-
7		01010-E1080	Bolt	18	567555-

FIG. A1530-001001 Turbocharger (Inner Parts)

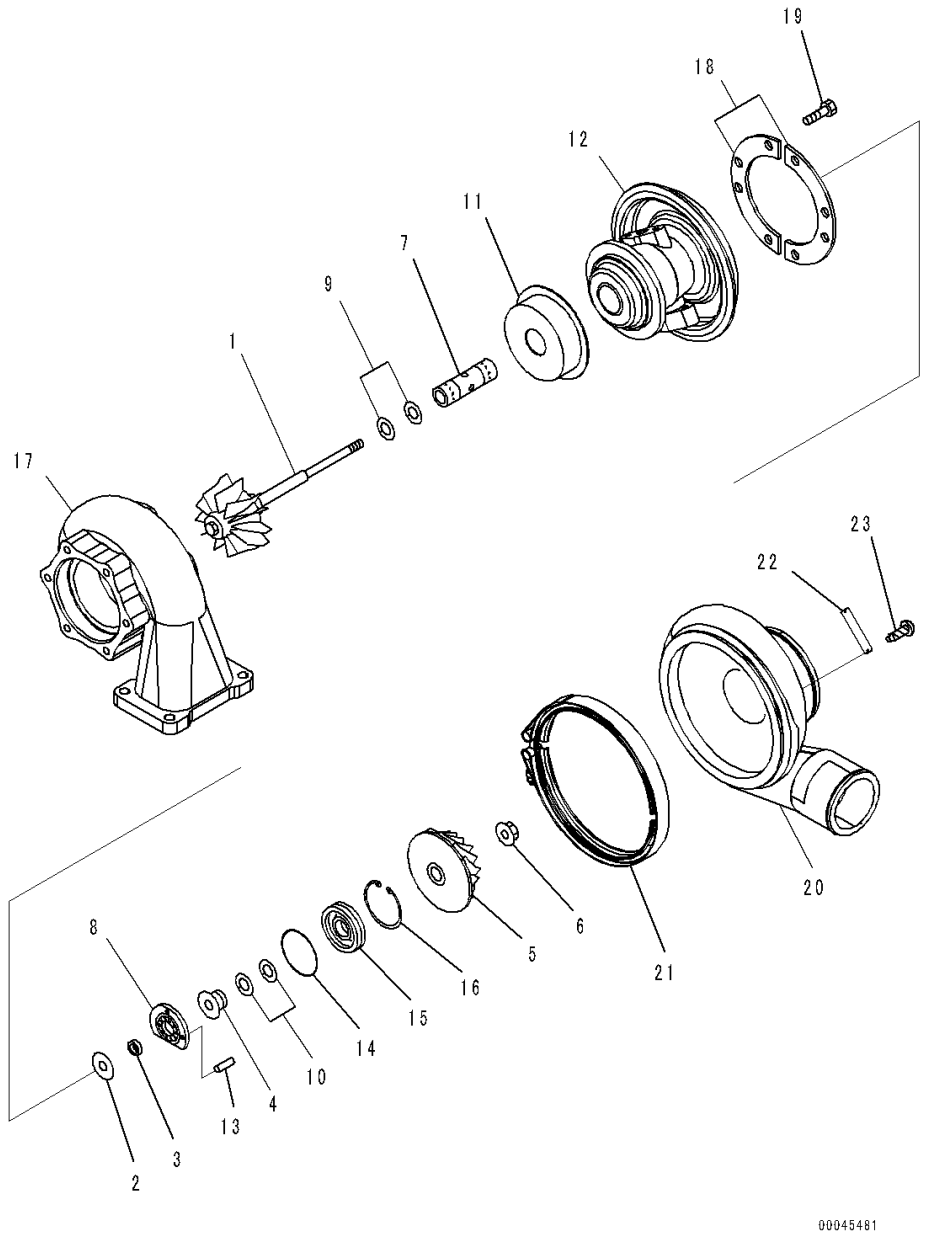

Index	Code	Part Number	Description	Qty	Serial Number
		6506-21-5010	Turbocharger Assembly	1	567555-
		6506-21-5920	• Core Assembly	1	567555-
1	C1		• • Rotor, Turbine	1	567555-
2	C1		• • Plate	1	567555-
3	C1		• • Spacer	1	567555-
4	C1		• • Flinger	1	567555-
5	C1		• • Impeller, Blower	1	567555-
6	C1		• • Nut	1	567555-
7	C1		• • Bearing, Journal	1	567555-
8	C1		• • Bearing, Thrust	1	567555-
9	C1		• • Seal Ring, Turbine	2	567555-
10	C1		• • Seal Ring, Blower	2	567555-
11	C1		• • Shield, Heat	1	567555-
12	C1		• • Housing, Center	1	567555-
13	C1		• • Pin, Dowel	1	567555-
14	C1		• • O-ring	1	567555-
15	C1		• • Insert	1	567555-
16	C1		• • Ring, Snap	1	567555-
17		6506-21-4230	• Housing, Turbine	1	567555-
18		6505-11-0520	• Plate	2	567555-
19		01020-01016	• Bolt	8	567555-
20		6506-21-2040	• Housing, Blower	1	567555-
21		6501-11-1721	• V-band	1	567555-
22		6505-99-9011	• Plate, Name	1	567555-
23		04418-02550	• Screw	2	567555-

FIG. A1530-001002 Turbocharger (Mounting)

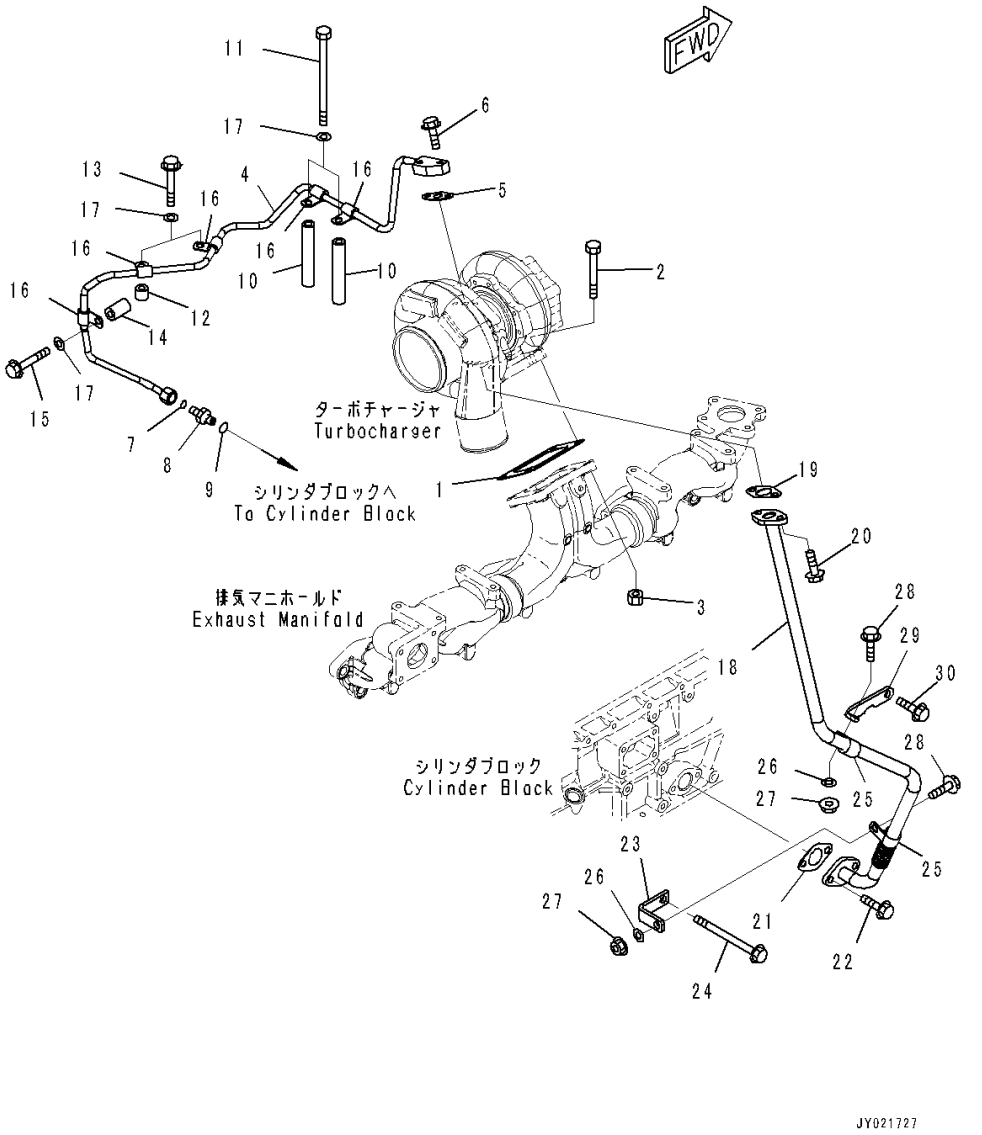

Index	Code	Part Number	Description	Qty	Serial Number
1		6251-11-5830	Gasket	1	567555-
2		01050-61045	Bolt	4	567555-
3		6114-11-5590	Nut	4	567555-
4		6251-51-8250	Tube, Supply	1	567555-
5		6221-51-8160	Gasket	1	567555-
6		01435-00830	Bolt	2	567555-
7		6251-51-9880	O-ring	1	567555-
8		6251-51-9850	Union	1	567555-
9		6251-51-9890	O-ring	1	567555-
10		6151-51-5490	Spacer	2	567555-
11		01011-81095	Bolt	2	567555-
12		6631-11-5630	Spacer	1	567555-
13		01435-01085	Bolt	2	567555-
14		6150-81-6920	Spacer	1	567555-
15		01435-01065	Bolt	1	567555-
16		600-051-6100	Clip	5	567555-
17		01643-31032	Washer	5	567555-
18		6251-51-8570	Tube	1	567555-
19		6151-51-8151	Gasket	1	567555-
20		01435-01025	Bolt	2	567555-
21		6154-51-8310	Gasket	1	567555-
22		01435-01025	Bolt	1	567555-
23		6251-21-5480	Bracket	1	567555-
24		01435-01095	Bolt	1	567555-
25		600-051-6190	Clip	2	567555-
26		01643-31032	Washer	2	567555-
27		01584-01008	Nut	2	567555-
28		01435-01025	Bolt	2	567555-
29		6251-21-5470	Bracket	1	567555-
30		01435-01045	Bolt	1	567555-

FIG. A1610-002001 Exhaust Muffler

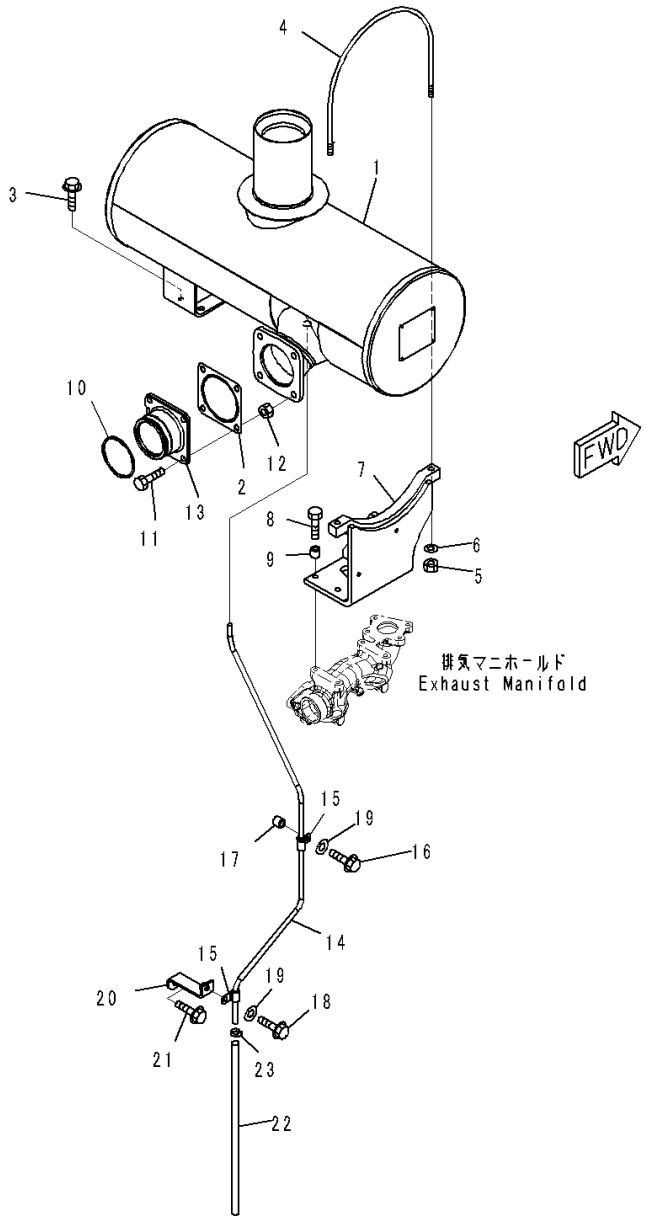

Index	Code	Part Number	Description	Qty	Serial Number
1		6251-11-5950	Muffler	1	567555-
2		6150-11-5751	Gasket	1	567555-
3		01435-01030	Bolt	4	567555-
4		6221-11-5910	U-bolt	1	567555-
5		6215-11-5740	Nut	2	567555-
6		01643-31032	Washer	2	567555-
7		6251-11-5780	Bracket	1	567555-
8		01010-E1045	Bolt	4	567555-
9		6631-11-5630	Spacer	4	567555-
10		6151-11-5280	Seal Ring	1	567555-
11		01050-61240	Bolt	4	567555-
12		6685-11-5550	Nut	4	567555-
13		6251-11-5380	Joint	1	567555-
14		6251-11-5750	Tube, Drain	1	567555-
15		600-051-6100	Clip	2	567555-
16		01435-01035	Bolt	1	567555-
17		6631-11-5630	Spacer	1	567555-
18		01435-01020	Bolt	1	567555-
19		01643-31032	Washer	2	567555-
20		6251-11-5760	Bracket	1	567555-
21		01435-01030	Bolt	1	567555-
22		07260-20960	Hose	1	567555-
23		07281-00197	Clamp	1	567555-

FIG. A1790-001001 Water Temperature Sensor

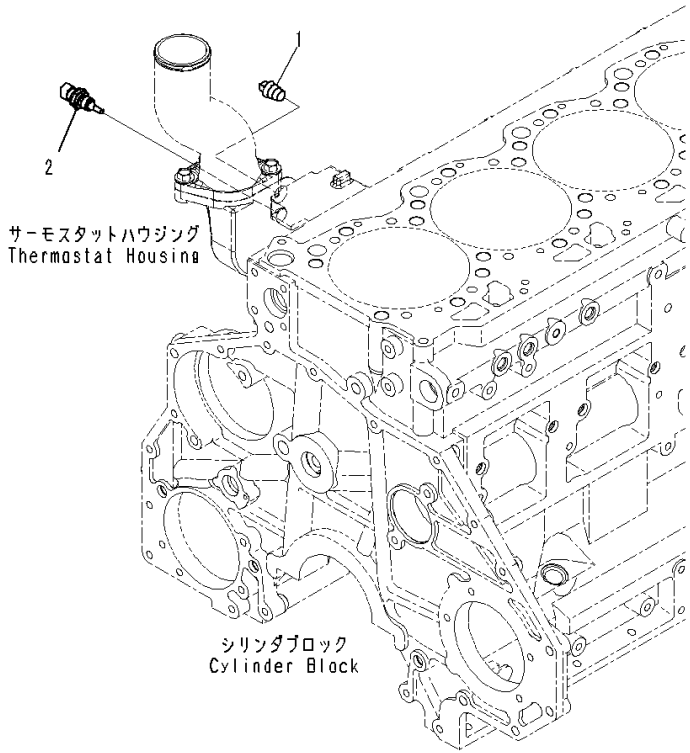

Index	Code	Part Number	Description	Qty	Serial Number
1		07042-A0415	Plug	1	567555-
2		6261-81-6901	Sensor Assembly, Water Temperature	1	567555-
		6216-84-9740	• Seal	1	567555-

FIG. A1570-002001 Heat Shield

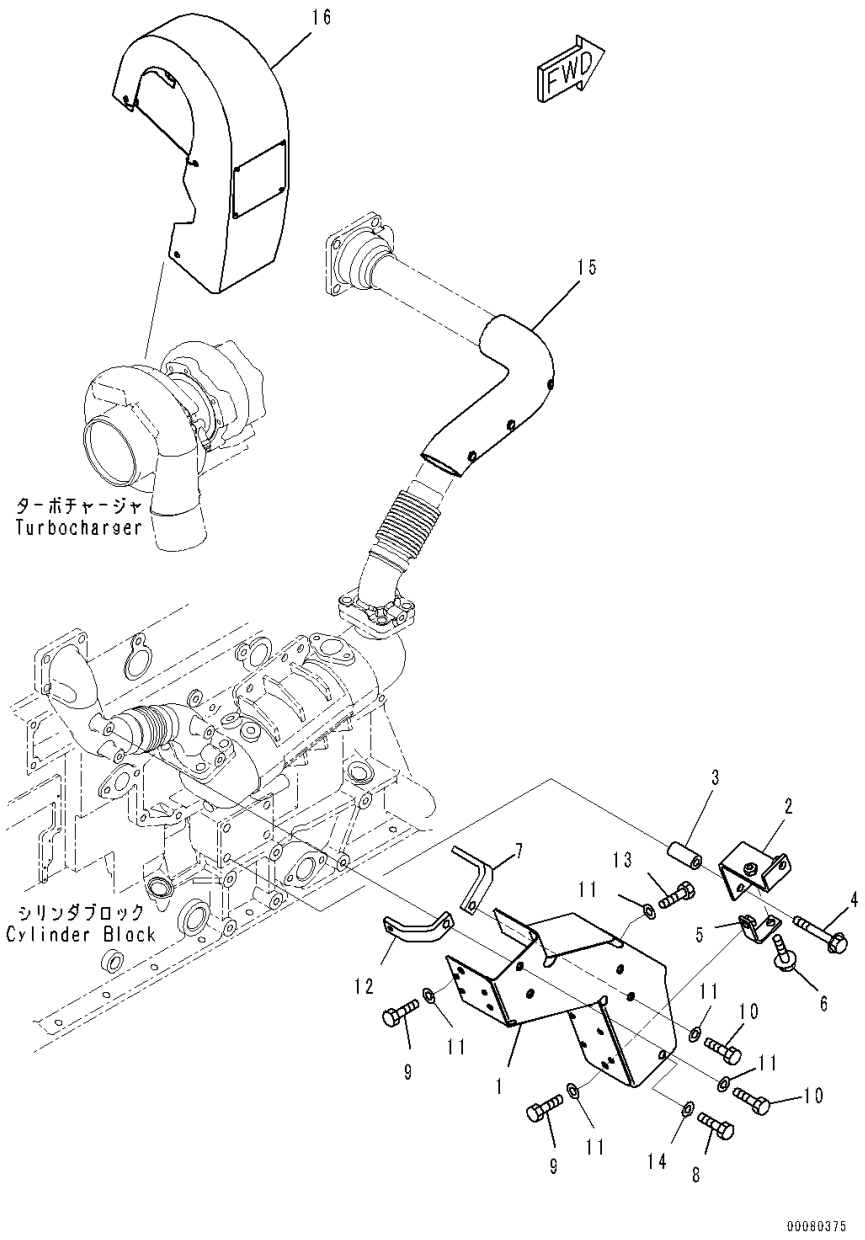

Index	Code	Part Number	Description	Qty	Serial Number
1		6251-11-6120	Cover, Heat Shield	1	567555-
2		6251-11-6380	Bracket	1	567555-
3		6152-51-5520	Spacer	2	567555-
4		01435-01075	Bolt	2	567555-
5		6934-71-5860	Bracket	1	567555-
6		01435-01025	Bolt	1	567555-
7		6251-11-6480	Bracket	1	567555-
8		01010-E1025	Bolt	1	567555-
9		01010-E1025	Bolt	2	567555-
10		01010-E1030	Bolt	4	567555-
11		01643-31032	Washer	7	567555-
12		6251-11-6570	Bracket	1	567555-
13		01010-E1025	Bolt	1	567555-
14		01643-31032	Washer	1	567555-
15		6251-11-6660	Cover, Heat Shield	1	567555-
16		6251-11-5460	Cover, Turbocharger	1	567555-

FIG. A1550-002001 Exhaust Gas Re-circulation (EGR) Valve (For Cold Area Specification A (-30 deg C)) (Inner Parts, EGR Valve)

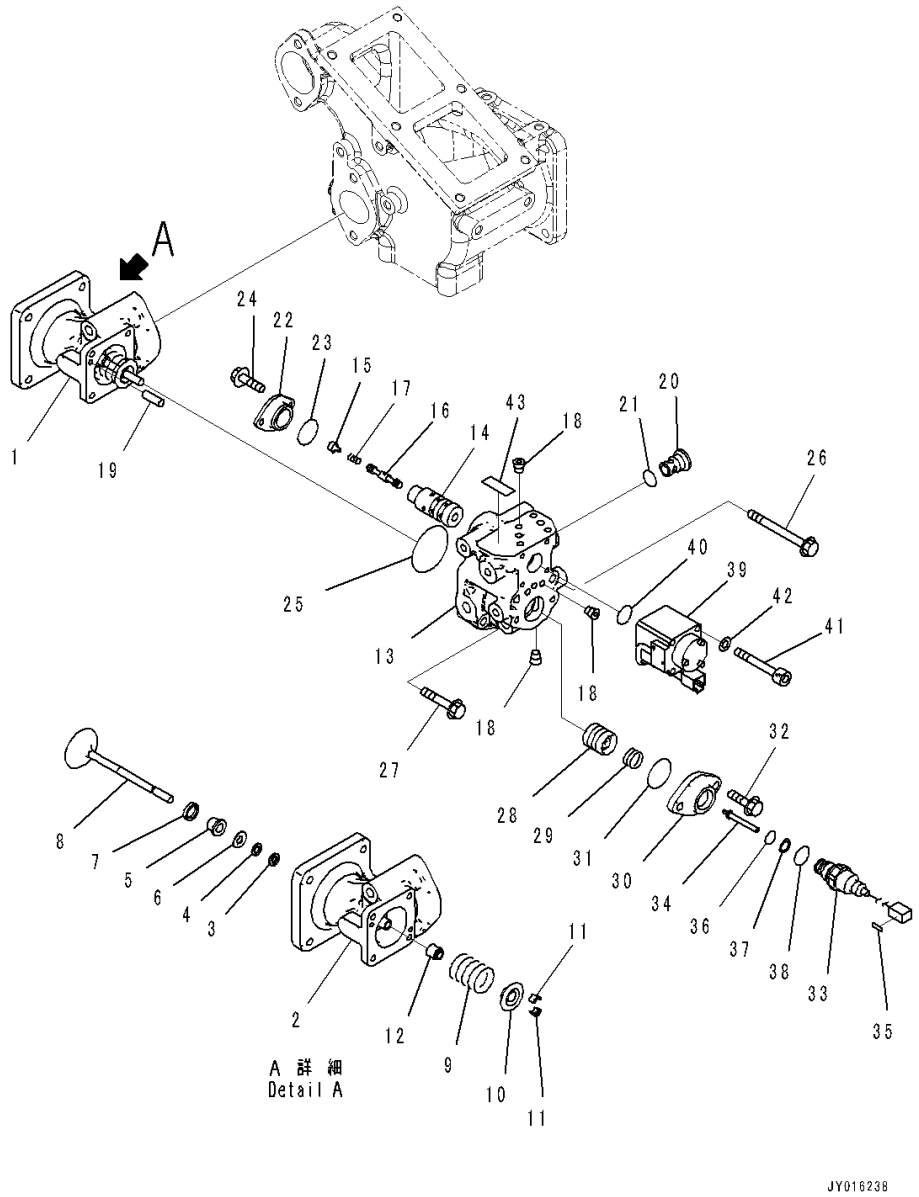

Index	Code	Part Number	Description	Qty	Serial Number
		6261-41-4900	Valve Assembly, (EGR)	1	567555-
1		6261-41-4910	• Valve Assembly	1	567555-
2		6261-41-4920	• • Case	1	567555-
3		6261-41-4810	• • Seal	1	567555-
4		6261-41-4820	• • Insulator	1	567555-
5		6261-41-4830	• • Cover	1	567555-
6		6261-41-4840	• • Plate	1	567555-
7		6261-41-4851	• • Ring	1	567555-
8		6261-41-9650	• • Valve	1	567555-
9		6261-41-9610	• • Spring	1	567555-
10		6204-41-4510	• • Seat	1	567555-
11		6204-41-4520	• • Cotter	2	567555-
12		6204-41-4541	• • Seal	1	567555-
		6261-41-9530	• Case Assembly	1	567555-
13		6261-41-9540	• • Case	1	567555-
14		6553-51-2110	• • Bushing	1	567555-
15		6553-51-2820	• • Seat, T=50mm	1	567555-
16		6553-51-3110	• • Spool	1	567555-
17		6553-51-3511	• • Spring	1	567555-
18		708-21-12541	• • Plug	7	567555-
19		04020-00514	• • Pin, Dowel	2	567555-
20		6261-41-9640	• • Filter	1	567555-
21		07002-61823	• • O-ring	1	567555-
22		6261-41-4960	• Cover	1	567555-
23		07000-E2025	• O-ring	1	567555-
24		01435-00612	• Bolt	2	567555-
25		07000-E2055	• O-ring	1	567555-
26		01435-00895	• Bolt	2	567555-
27		01435-00845	• Bolt	2	567555-
28		6261-41-9580	• Piston	1	567555-
29		6261-41-9620	• Spring	1	567555-
30		6261-41-9550	• Cover	1	567555-
31		07000-A2035	• O-ring	1	567555-
32		01435-00820	• Bolt	2	567555-
		729-12-11001	• Sensor Assembly	1	567555-
33		729-12-11100	• • Sensor Assembly	1	567555-
34		729-12-11700	• • Core Assembly	1	569452-
35		729-11-11180	• • Plate	1	567555-
36		07000-B2012	• • O-ring	1	567555-

FIG. A1550-002001 Exhaust Gas Re-circulation (EGR) Valve (For Cold Area Specification A (-30 deg C)) (Inner Parts, EGR Valve)

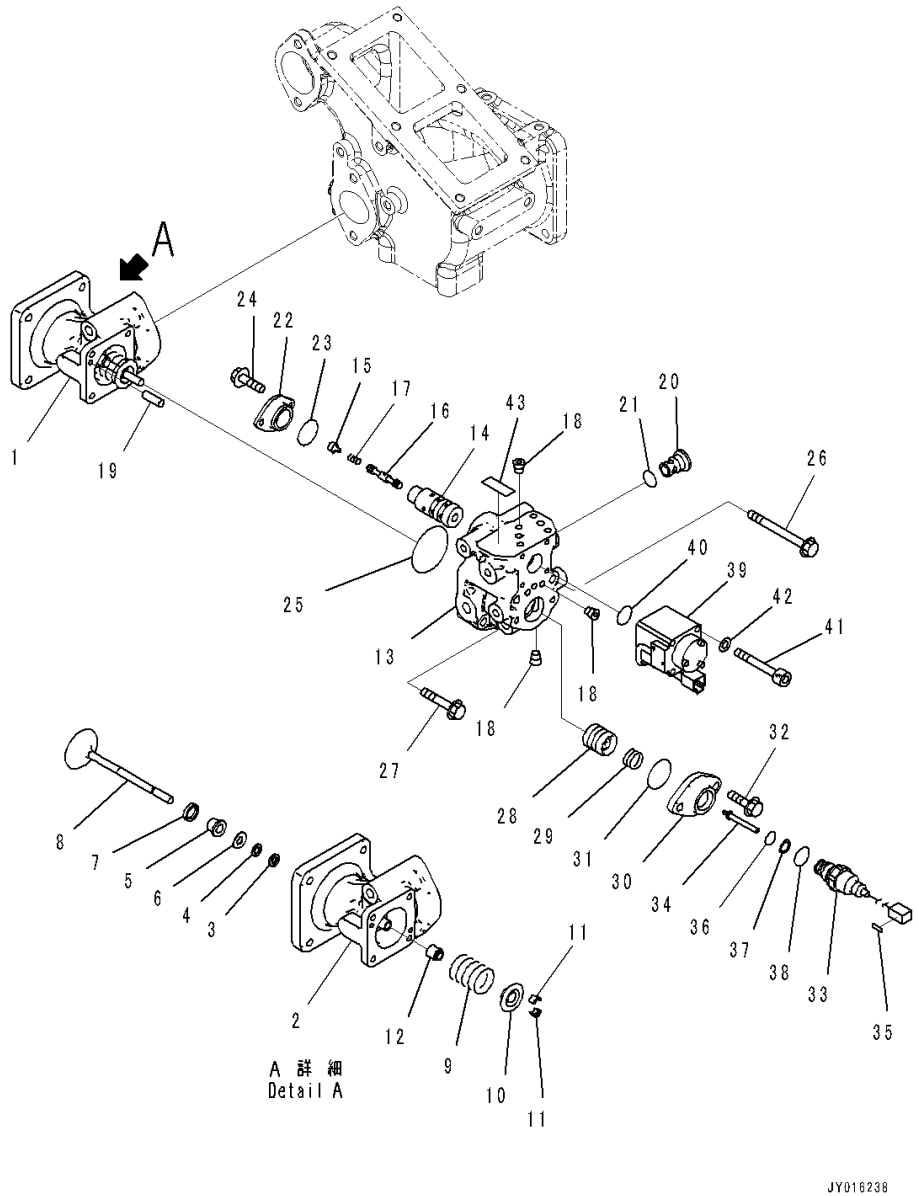

Index	Code	Part Number	Description	Qty	Serial Number
37		07001-02012	• • Ring, Back-up	1	567555-
38		07002-62034	• • O-ring	1	567555-
39		6261-41-9590	• Solenoid Assembly	1	567555-
40		07000-A2016	• O-ring	1	567555-
41		6553-81-7110	• Bolt	4	567555-
42		01643-30623	• Washer	4	567555-
43		6261-41-9690	• Plate	1	567555-

FIG. A1550-002002 Exhaust Gas Re-circulation (EGR) Valve (For Cold Area Specification A (-30 deg C)) (EGR Valve and Cooler Mounting) (1/2)

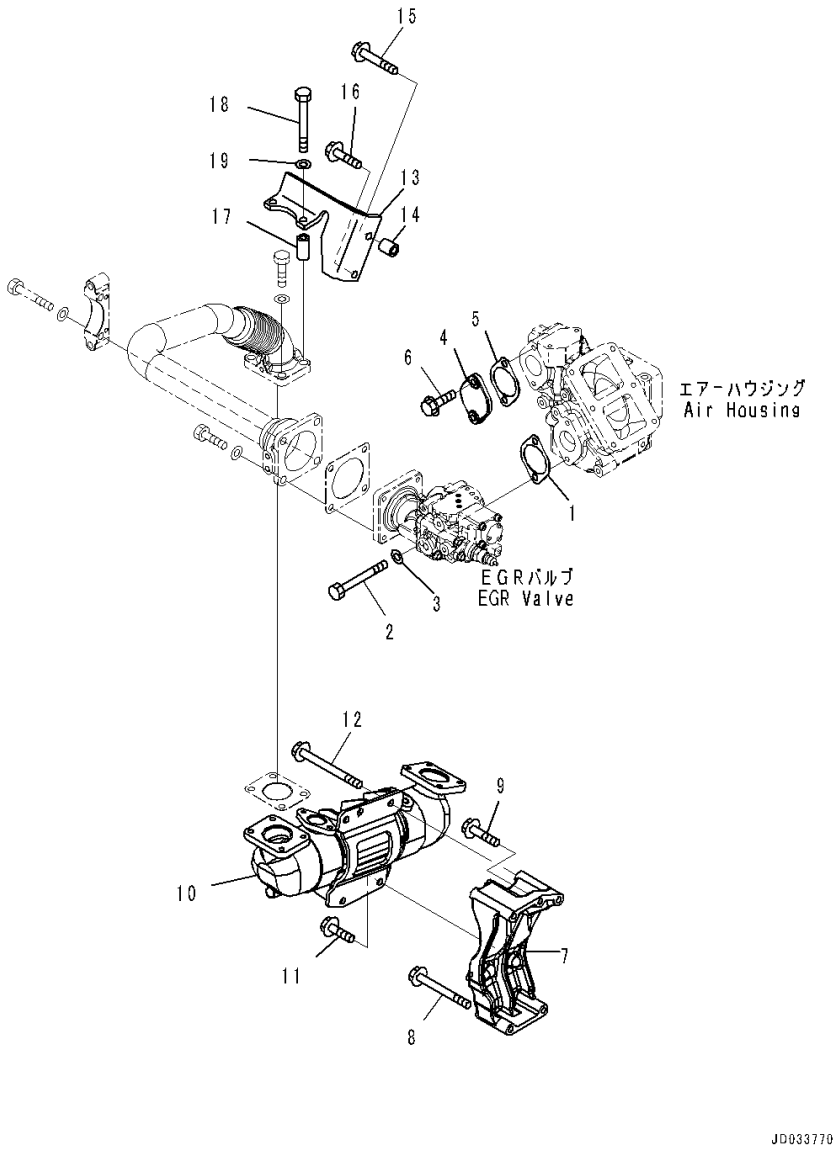

Index	Code	Part Number	Description	Qty	Serial Number
1		6166-61-6341	Gasket	1	567555-
2		01011-E1005	Bolt	2	567555-
3		01643-31032	Washer	2	567555-
4		6251-11-4220	Cover	1	567555-
5		6166-61-6341	Gasket	1	567555-
6		01435-01025	Bolt	2	567555-
7		6251-21-6610	Bracket	1	567555-
8		01435-01090	Bolt	1	567555-
9		01435-01035	Bolt	1	567555-
10		6251-61-7100	Cooler Assembly, (EGR)	1	567555-
11		01435-01020	Bolt	1	567555-
12		01436-01020	Bolt	2	567555-
13		6251-61-7150	Bracket	1	567555-
14		6128-21-6730	Spacer	1	567555-
15		01435-01050	Bolt	1	567555-
16		01435-01025	Bolt	1	567555-
17		6933-21-6330	Spacer	2	567555-
18		01010-E1085	Bolt	2	567555-
19		01643-31032	Washer	2	567555-

FIG. A1550-002003 Exhaust Gas Re-circulation (EGR) Valve (For Cold Area Specification A (-30 deg C)) (Inner Parts, Pump)

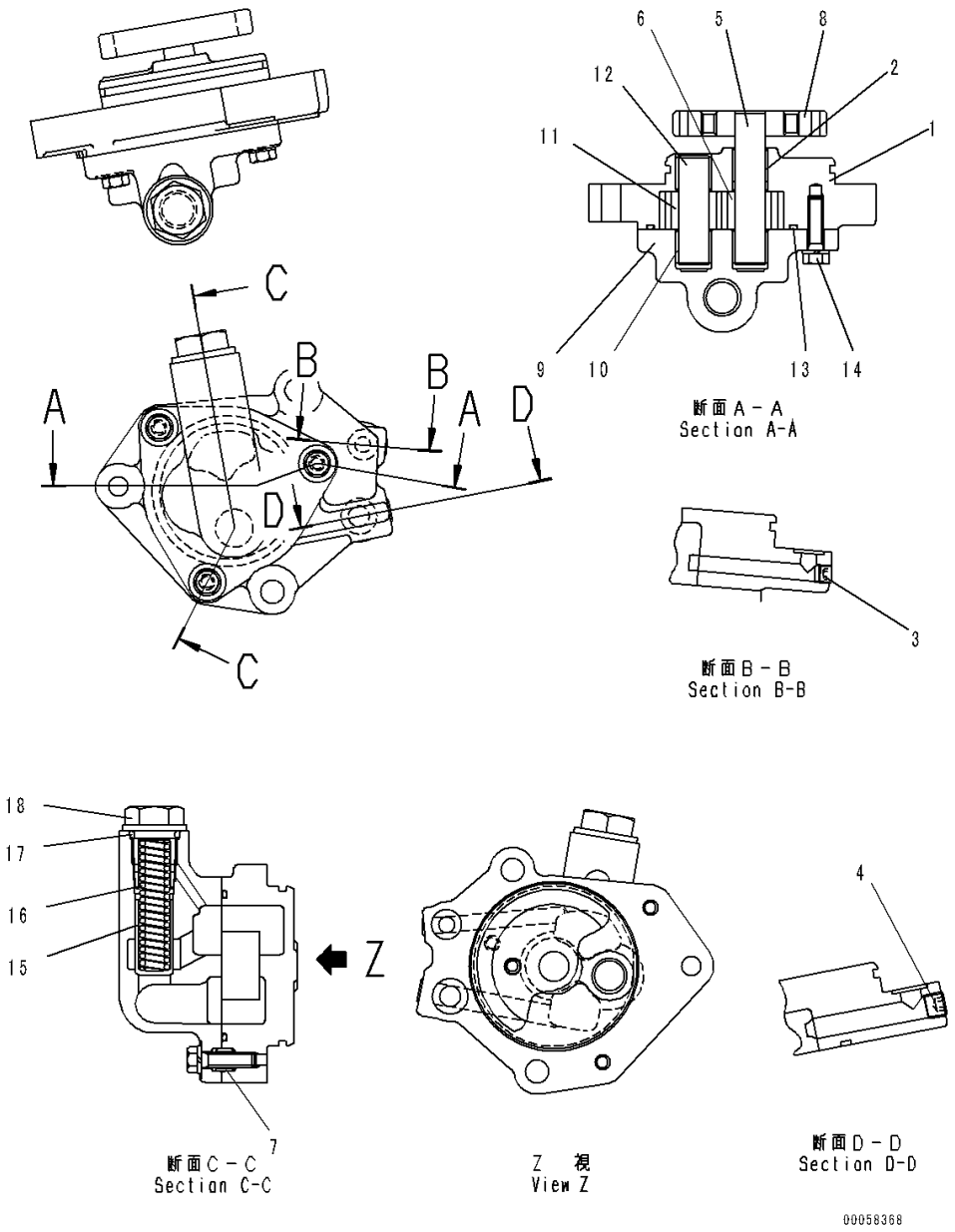

Index	Code	Part Number	Description	Qty	Serial Number
		6251-51-9100	Pump Assembly	1	567555-
		PML160-12400	• Case Assembly	1	567555-
	C1		• • Case Assembly	1	567555-
1	C1		• • • Case	1	567555-
2	C1		• • • Bushing	2	567555-
3	C1		• • • Plug	1	567555-
4	C1		• • • Plug	1	567555-
	C1		• • Gear Assembly	1	567555-
5	C1		• • • Shaft	1	567555-
6	C1		• • • Gear, Driven	1	567555-
7	C1		• • Pin, Dowel	2	567555-
8	C1		• • Gear	1	567555-
		PML152-07801	• Cover Assembly	1	567555-
9	C1		• • Cover	1	567555-
10	C1		• • Bushing	2	567555-
		6261-51-9200	• Gear Assembly	1	567555-
11	C1		• • Gear, Driven	1	567555-
12	C1		• • Shaft	1	567555-
13		6261-51-9230	• O-ring	1	567555-
14		PML199-00210	• Bolt	3	567555-
15		6261-51-2140	• Valve	1	567555-
16		PML137-05901	• Spring	1	567555-
17		07002-22434	• O-ring	1	567555-
18		PML139-01700	• Plug	1	567555-

FIG. A1550-002004 Exhaust Gas Re-circulation (EGR) Valve (For Cold Area Specification A (-30 deg C)) (EGR Valve and Cooler Mounting) (2/2)

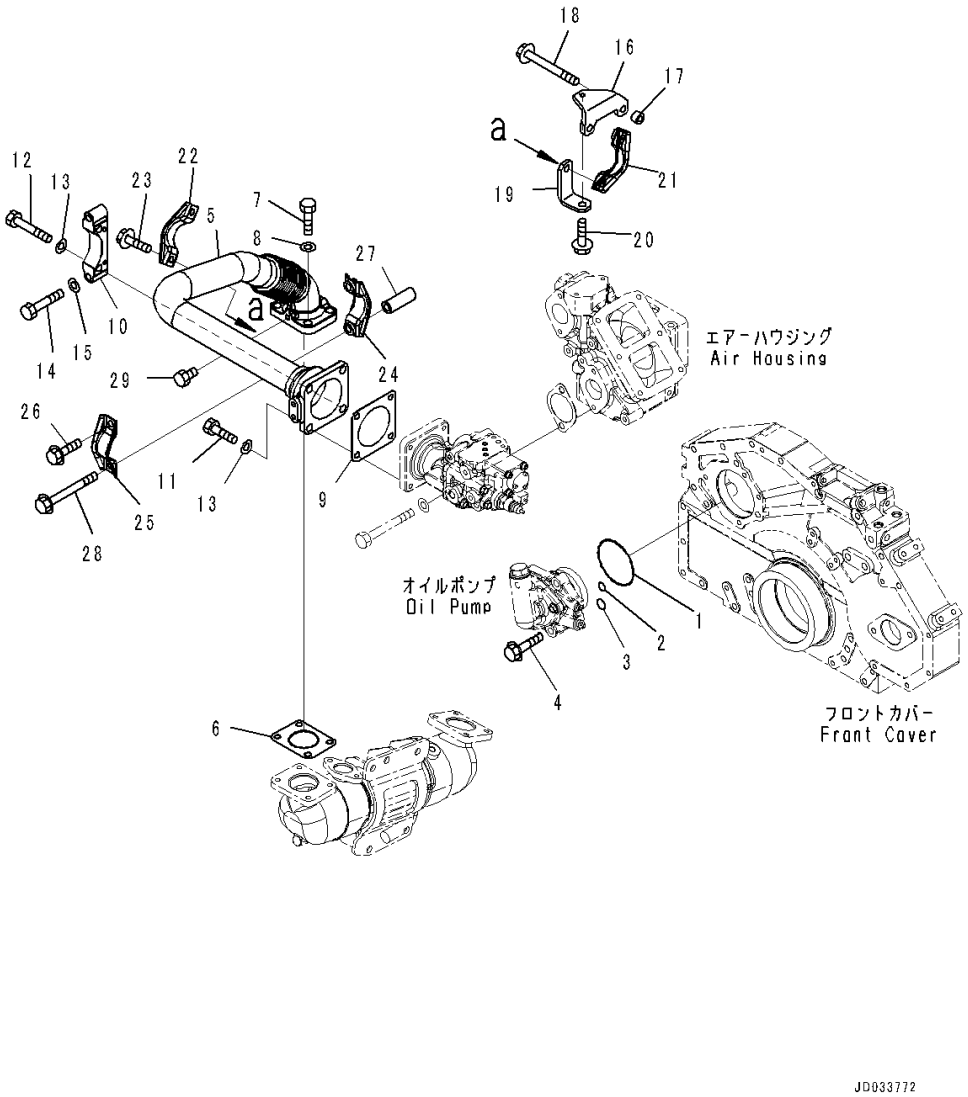

Index	Code	Part Number	Description	Qty	Serial Number
1		07000-72085	O-ring	1	567555-
2		07000-72012	O-ring	1	567555-
3		07000-72015	O-ring	1	567555-
4		01435-01035	Bolt	3	567555-
5		6251-11-9320	Tube	1	567555-
6		6261-11-9520	Gasket	1	567555-
7		01010-E1030	Bolt	2	567555-
8		01643-31032	Washer	2	567555-
9		6207-11-5390	Gasket	1	567555-
10		6251-11-9150	Plate	1	567555-
11		01010-E1030	Bolt	2	567555-
12		01010-E1060	Bolt	2	567555-
13		01643-31032	Washer	4	567555-
14		01010-81050	Bolt	2	567555-
15		01643-31032	Washer	2	567555-
16		6251-11-9210	Bracket	1	567555-
17		6131-12-5920	Spacer	2	567555-
18		01435-01090	Bolt	2	567555-
19		6251-11-9220	Bracket	1	567555-
20		01435-01020	Bolt	1	567555-
21		6251-11-9130	Clamp, Half	1	567555-
22		6251-11-9170	Clamp, Half	1	567555-
23		01435-01025	Bolt	2	567555-
24		6251-11-9180	Clamp, Half	1	567555-
25		6251-11-9170	Clamp, Half	1	567555-
26		01435-01025	Bolt	1	567555-
27		6112-23-6971	Spacer	1	567555-
28		01435-01085	Bolt	1	567555-
29		6215-11-5920	Plug	1	567555-

FIG. A1550-002005 Exhaust Gas Re-circulation (EGR) Valve (For Cold Area Specification A (-30 deg C)) (EGR Cooler Piping and Air Vent)

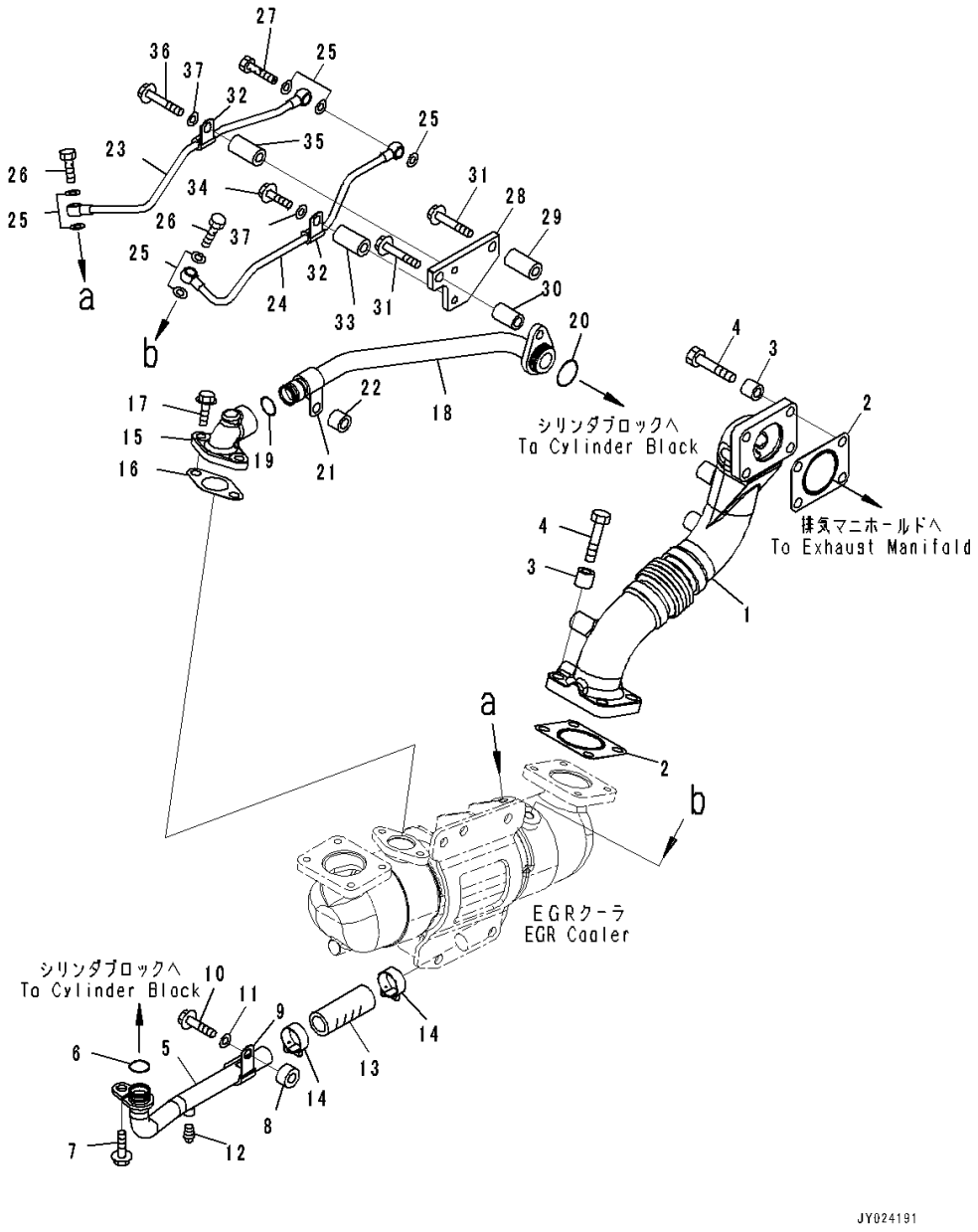

Index	Code	Part Number	Description	Qty	Serial Number
1		6251-11-9110	Tube, Exhaust Gas	1	567555-
2		6261-11-9520	Gasket	2	567555-
3		6631-11-5630	Spacer	8	567555-
4		6251-11-9350	Bolt	6	567555-
5		6251-61-7210	Tube, Water Inlet	1	567555-
6		07000-A2021	O-ring	1	567555-
7		01435-01025	Bolt	1	567555-
8		6162-63-3910	Spacer	1	567555-
9		600-051-6220	Clip	1	567555-
10		01435-01040	Bolt	1	567555-
11		01643-31032	Washer	1	567555-
12		07042-A0108	Plug	1	567555-
13		6251-61-7220	Hose	1	566939-
14		07281-00359	Clamp, Hose	2	567555-
15		6251-61-7250	Connector, Water	1	567555-
16		6210-61-6551	Gasket	1	567555-
17		01435-01025	Bolt	2	567555-
18		6251-61-7410	Tube, Water	1	567555-
19		07000-A2021	O-ring	1	567555-
20		07000-A3029	O-ring	1	567555-
21		600-051-6220	Clip	1	567555-
22		175-79-33240	Collar	1	567555-
23		6251-61-7620	Tube, Air Vent	1	567555-
24		6251-61-7640	Tube	1	567555-
25		07005-01212	Seal, Washer	7	567555-
26		07206-30812	Bolt, Joint	2	567555-
27		6354-71-5560	Bolt, Joint	1	567555-
28		6251-61-7240	Plate	1	567555-
29		6933-21-6330	Spacer	1	567555-
30		6131-21-6770	Collar	1	567555-
31		01435-01065	Bolt	2	567555-
32		600-051-6080	Clip	2	567555-
33		6631-11-5630	Spacer	1	567555-
34		01435-01035	Bolt	1	567555-
35		6933-21-6330	Spacer	1	567555-
36		01435-01060	Bolt	1	567555-
37		01643-31032	Washer	2	567555-

FIG. A1550-002006 Exhaust Gas Re-circulation (EGR) Valve (For Cold Area Specification A (-30 deg C)) (EGR Valve Lubricating Oil Piping)

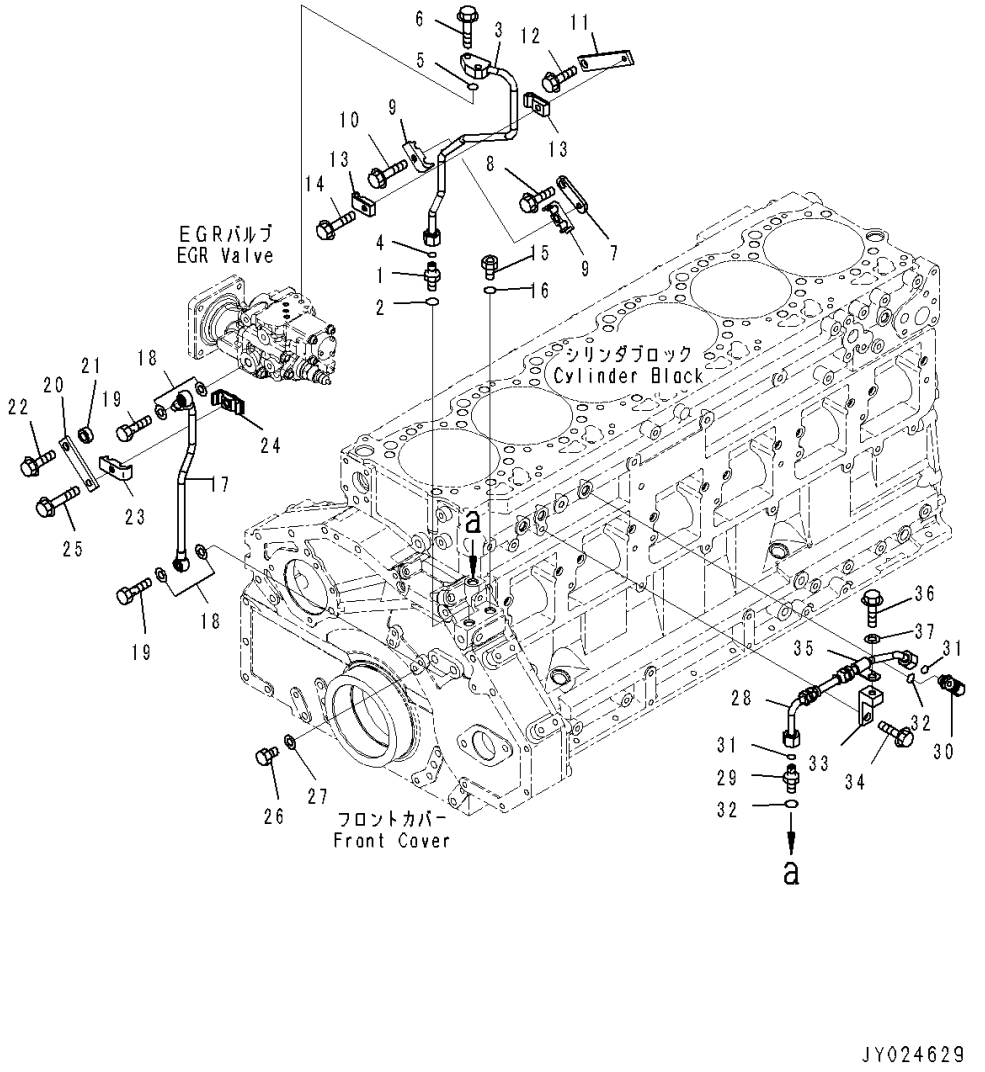

Index	Code	Part Number	Description	Qty	Serial Number
1		6251-51-9850	Union	1	567555-
2		6251-51-9890	O-ring	1	567555-
3		6251-51-9310	Tube, Supply	1	567555-
4		6251-51-9880	O-ring	1	567555-
5		07000-E2012	O-ring	1	567555-
6		01435-00825	Bolt	2	567555-
7		6251-51-9380	Plate	1	567555-
8		01435-01020	Bolt	1	567555-
9		6166-75-6821	Clamp, half	2	567555-
10		01435-00830	Bolt	1	567555-
11		6251-51-9391	Plate	1	567555-
12		01435-01020	Bolt	1	567555-
13		6166-75-6810	Clamp	2	567555-
14		01435-00835	Bolt	1	567555-
15		6215-81-9520	Plug	1	567555-
16		6251-51-9890	O-ring	1	567555-
17		6251-51-9510	Tube	1	567555-
18		07005-01412	Seal, Washer	4	567555-
19		07206-31014	Bolt, Joint	2	567555-
20		6251-51-8410	Plate	1	567555-
21		6132-21-4630	Spacer	1	567555-
22		01435-01035	Bolt	1	567555-
23		6166-75-6821	Clamp, half	1	567555-
24		6261-51-9481	Clamp, half	1	567555-
25		01435-00840	Bolt	1	567555-
26		6110-53-5910	Plug	1	567555-
27		07005-01412	Seal, Washer	1	567555-
28		6251-51-9220	Tube, Oil Supply	1	567555-
29		6251-51-9850	Union	1	567555-
30		6251-51-9810	Elbow	1	567555-
31		6251-51-9880	O-ring	2	567555-
32		6251-51-9890	O-ring	2	567555-
33		6251-51-9230	Bracket	1	567555-
34		01435-01030	Bolt	1	567555-
35		600-051-6100	Clip	1	567555-
36		01435-01020	Bolt	1	567555-
37		01643-31032	Washer	1	567555-

FIG. A1550-003001 Exhaust Gas Re-circulation (EGR) Valve (Inner Parts, EGR Valve)

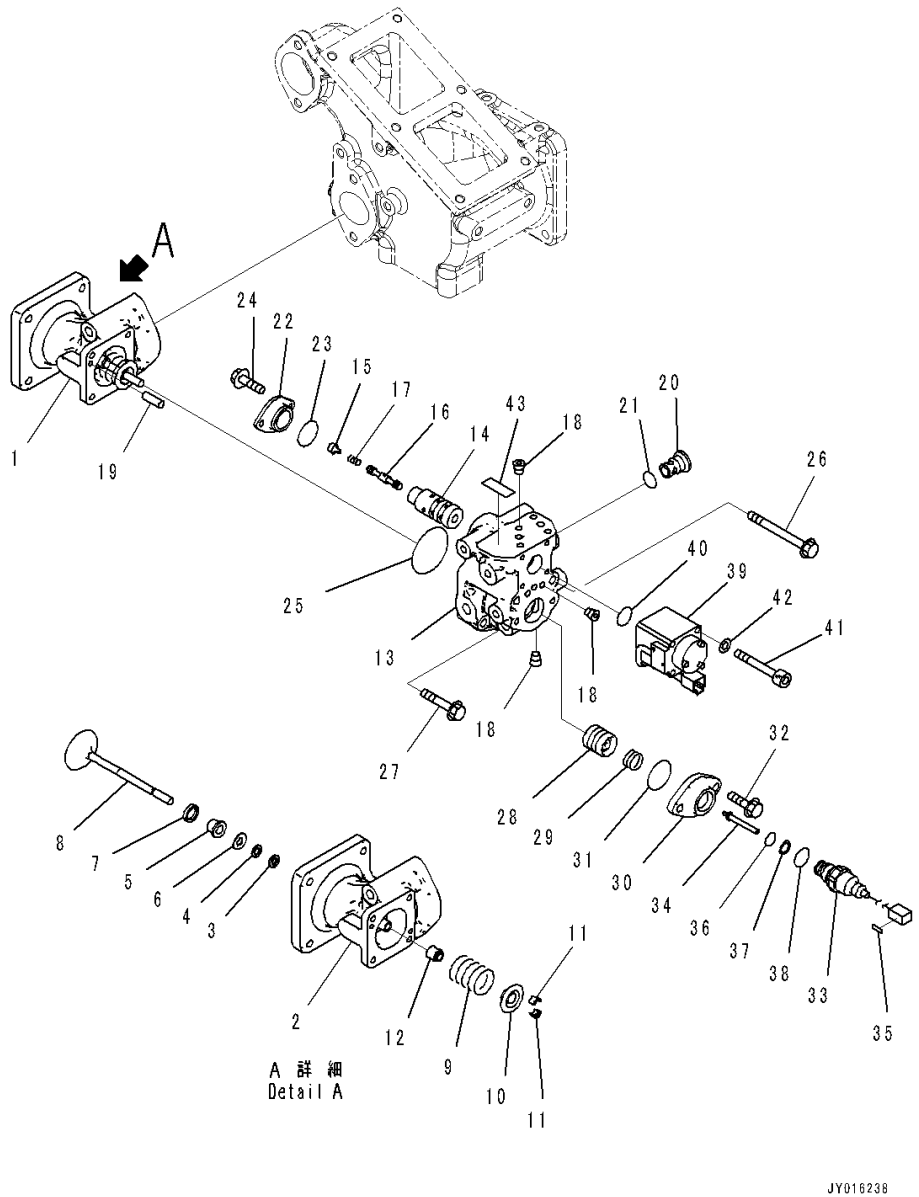

Index	Code	Part Number	Description	Qty	Serial Number
		6261-41-4900	Valve Assembly, (EGR)	1	567555-
1		6261-41-4910	• Valve Assembly	1	567555-
2		6261-41-4920	• • Case	1	567555-
3		6261-41-4810	• • Seal	1	567555-
4		6261-41-4820	• • Insulator	1	567555-
5		6261-41-4830	• • Cover	1	567555-
6		6261-41-4840	• • Plate	1	567555-
7		6261-41-4851	• • Ring	1	567555-
8		6261-41-9650	• • Valve	1	567555-
9		6261-41-9610	• • Spring	1	567555-
10		6204-41-4510	• • Seat	1	567555-
11		6204-41-4520	• • Cotter	2	567555-
12		6204-41-4541	• • Seal	1	567555-
		6261-41-9530	• Case Assembly	1	567555-
13		6261-41-9540	• • Case	1	567555-
14		6553-51-2110	• • Bushing	1	567555-
15		6553-51-2820	• • Seat, T=50mm	1	567555-
16		6553-51-3110	• • Spool	1	567555-
17		6553-51-3511	• • Spring	1	567555-
18		708-21-12541	• • Plug	7	567555-
19		04020-00514	• • Pin, Dowel	2	567555-
20		6261-41-9640	• • Filter	1	567555-
21		07002-61823	• • O-ring	1	567555-
22		6261-41-4960	• Cover	1	567555-
23		07000-E2025	• O-ring	1	567555-
24		01435-00612	• Bolt	2	567555-
25		07000-E2055	• O-ring	1	567555-
26		01435-00895	• Bolt	2	567555-
27		01435-00845	• Bolt	2	567555-
28		6261-41-9580	• Piston	1	567555-
29		6261-41-9620	• Spring	1	567555-
30		6261-41-9550	• Cover	1	567555-
31		07000-A2035	• O-ring	1	567555-
32		01435-00820	• Bolt	2	567555-
		729-12-11001	• Sensor Assembly	1	567555-
33		729-12-11100	• • Sensor Assembly	1	567555-
34		729-12-11700	• • Core Assembly	1	569452-
35		729-11-11180	• • Plate	1	567555-
36		07000-B2012	• • O-ring	1	567555-
37		07001-02012	• • Ring, Back-up	1	567555-

FIG. A1550-003001 Exhaust Gas Re-circulation (EGR) Valve (Inner Parts, EGR Valve)

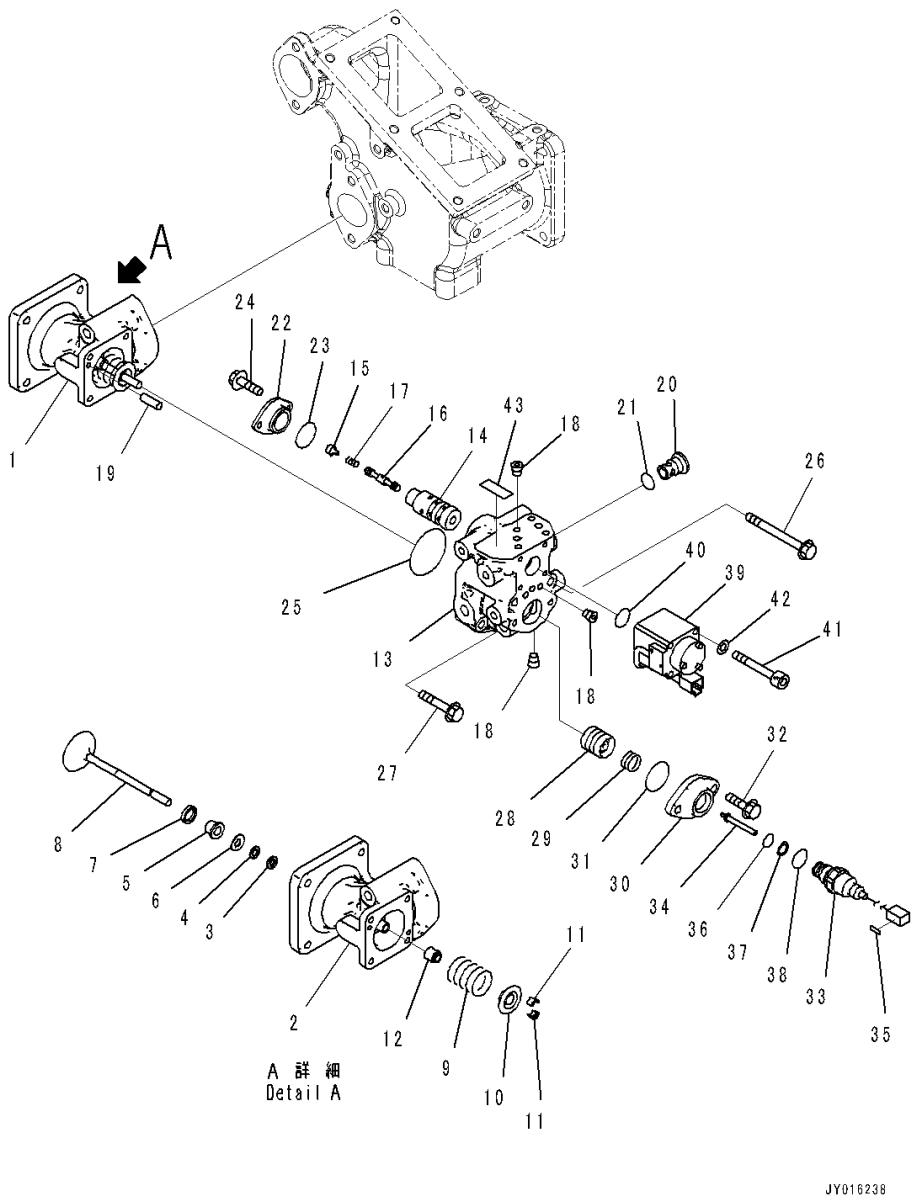

Index	Code	Part Number	Description	Qty	Serial Number
38		07002-62034	• • O-ring	1	567555-
39		6261-41-9590	• Solenoid Assembly	1	567555-
40		07000-A2016	• O-ring	1	567555-
41		6553-81-7110	• Bolt	4	567555-
42		01643-30623	• Washer	4	567555-
43		6261-41-9690	• Plate	1	567555-

FIG. A1550-003002 Exhaust Gas Re-circulation (EGR) Valve (EGR Valve and Cooler Mounting) (1/2)

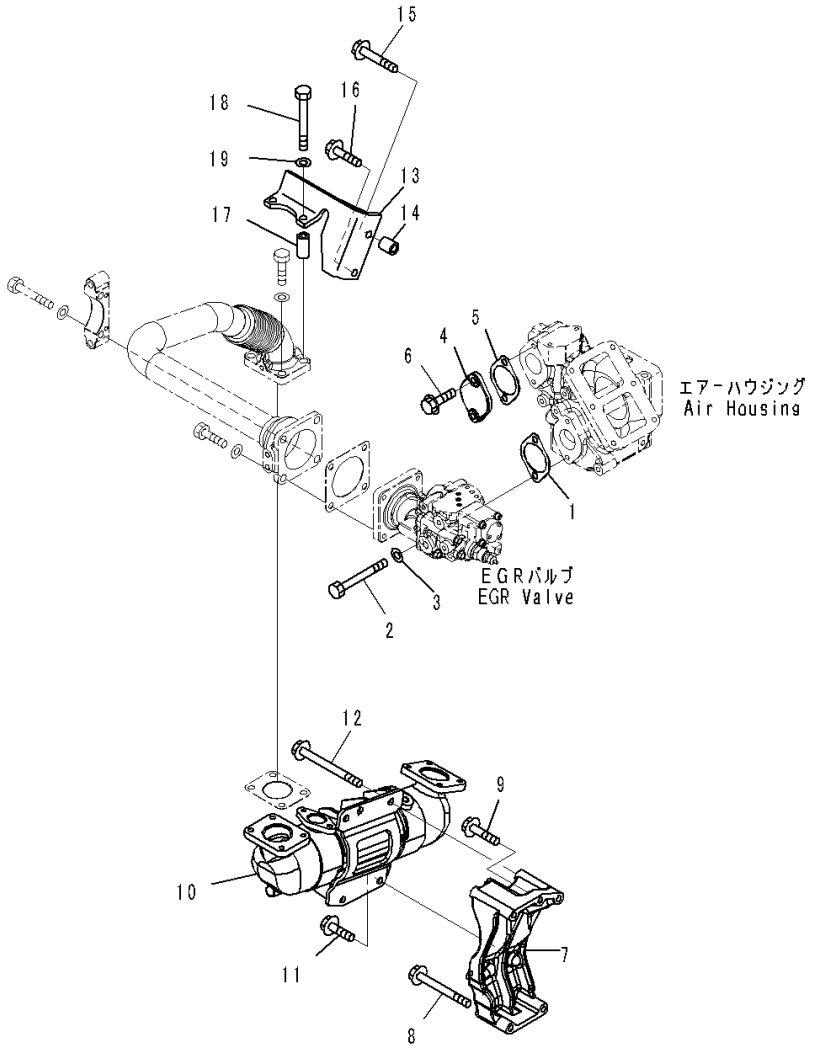

Index	Code	Part Number	Description	Qty	Serial Number
1		6166-61-6341	Gasket	1	567555-
2		01011-E1005	Bolt	2	567555-
3		01643-31032	Washer	2	567555-
4		6251-11-4220	Cover	1	567555-
5		6166-61-6341	Gasket	1	567555-
6		01435-01025	Bolt	2	567555-
7		6251-21-6610	Bracket	1	567555-
8		01435-01090	Bolt	1	567555-
9		01435-01035	Bolt	1	567555-
10		6251-61-7100	Cooler Assembly, (EGR)	1	567555-
11		01435-01020	Bolt	1	567555-
12		01436-01020	Bolt	2	567555-
13		6251-61-7150	Bracket	1	567555-
14		6128-21-6730	Spacer	1	567555-
15		01435-01050	Bolt	1	567555-
16		01435-01025	Bolt	1	567555-
17		6933-21-6330	Spacer	2	567555-
18		01010-E1085	Bolt	2	567555-
19		01643-31032	Washer	2	567555-

FIG. A1550-003003 Exhaust Gas Re-circulation (EGR) Valve (Inner Parts, Pump)

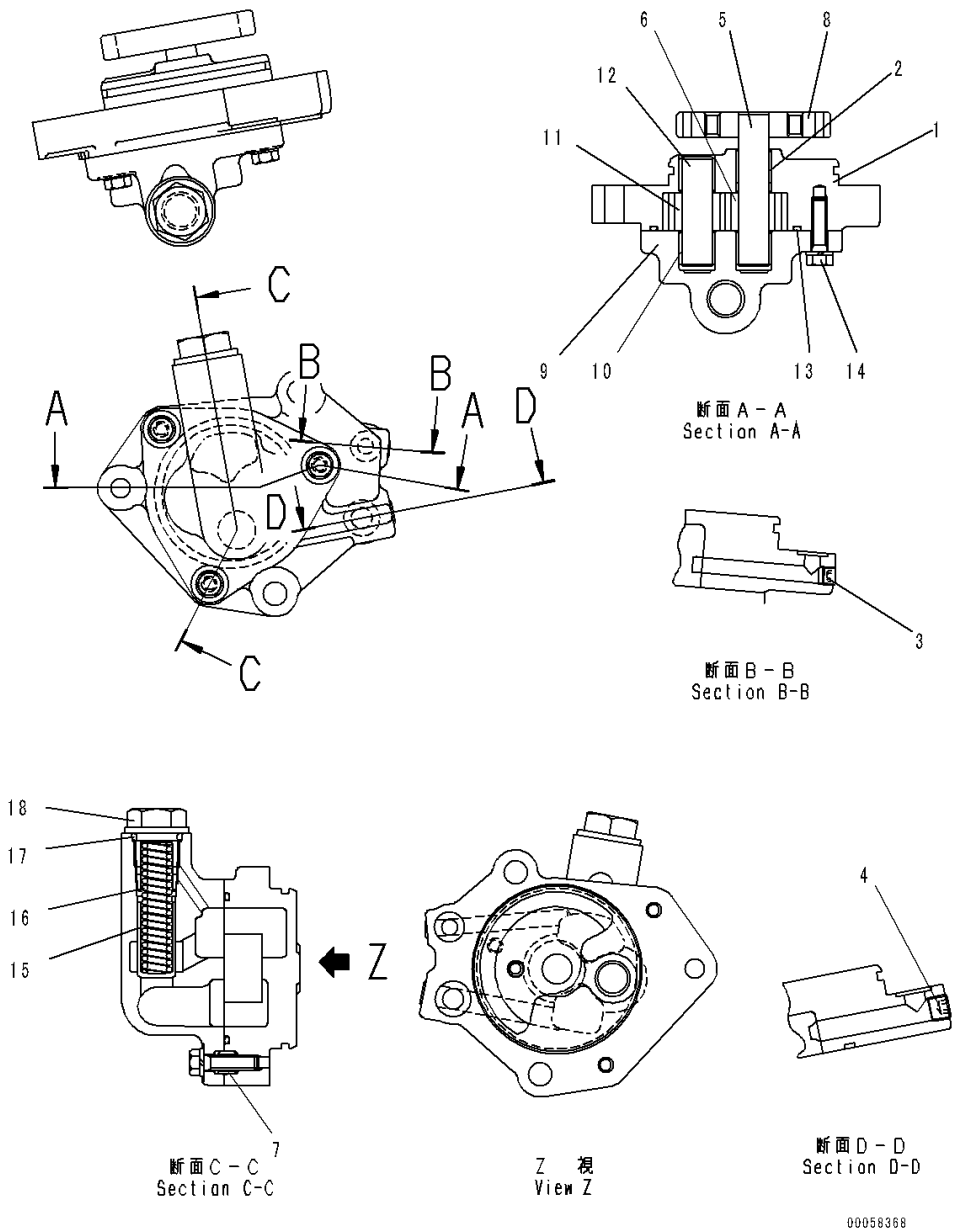

Index	Code	Part Number	Description	Qty	Serial Number
		6251-51-9100	Pump Assembly	1	567555-
		PML160-12400	• Case Assembly, Gear	1	567555-
	C1		• • Case Assembly	1	567555-
1	C1		• • • Case	1	567555-
2	C1		• • • Bushing	2	567555-
3	C1		• • • Plug	1	567555-
4	C1		• • • Plug	1	567555-
	C1		• • Gear Assembly, Drive	1	567555-
5	C1		• • • Shaft, Drive	1	567555-
6	C1		• • • Gear, Driven	1	567555-
7	C1		• • Pin, Dowel	2	567555-
8	C1		• • Gear, Head	1	567555-
		PML152-07801	• Cover Assembly	1	567555-
9	C1		• • Cover	1	567555-
10	C1		• • Bushing	2	567555-
		6261-51-9200	• Gear Assembly	1	567555-
11	C1		• • Gear, Driven	1	567555-
12	C1		• • Shaft, Driven	1	567555-
13		6261-51-9230	• O-ring	1	567555-
14		PML199-00210	• Bolt	3	567555-
15		6261-51-2140	• Valve	1	567555-
16		PML137-05901	• Spring	1	567555-
17		07002-22434	• O-ring	1	567555-
18		PML139-01700	• Plug	1	567555-

FIG. A1550-003004 Exhaust Gas Re-circulation (EGR) Valve (EGR Valve and Cooler Mounting) (2/2)

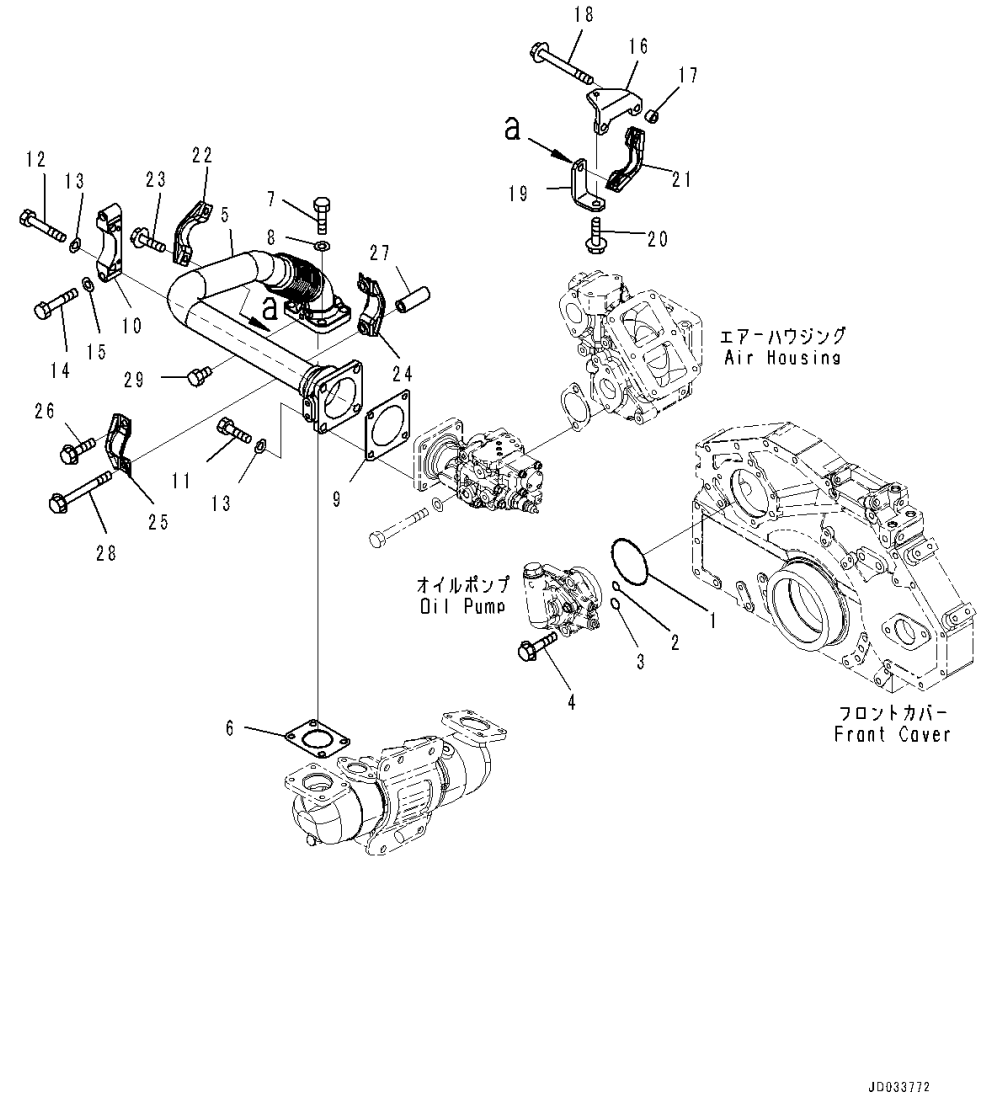

Index	Code	Part Number	Description	Qty	Serial Number
1		07000-72085	O-ring	1	567555-
2		07000-72012	O-ring	1	567555-
3		07000-72015	O-ring	1	567555-
4		01435-01035	Bolt	3	567555-
5		6251-11-9320	Tube	1	567555-
6		6261-11-9520	Gasket	1	567555-
7		01010-E1030	Bolt	2	567555-
8		01643-31032	Washer	2	567555-
9		6207-11-5390	Gasket	1	567555-
10		6251-11-9150	Plate	1	567555-
11		01010-E1030	Bolt	2	567555-
12		01010-E1060	Bolt	2	567555-
13		01643-31032	Washer	4	567555-
14		01010-81050	Bolt	2	567555-
15		01643-31032	Washer	2	567555-
16		6251-11-9210	Bracket	1	567555-
17		6131-12-5920	Spacer	2	567555-
18		01435-01090	Bolt	2	567555-
19		6251-11-9220	Bracket	1	567555-
20		01435-01020	Bolt	1	567555-
21		6251-11-9130	Clamp, Half	1	567555-
22		6251-11-9170	Clamp, Half	1	567555-
23		01435-01025	Bolt	2	567555-
24		6251-11-9180	Clamp, Half	1	567555-
25		6251-11-9170	Clamp, Half	1	567555-
26		01435-01025	Bolt	1	567555-
27		6112-23-6971	Spacer	1	567555-
28		01435-01085	Bolt	1	567555-
29		6215-11-5920	Plug	1	567555-

FIG. A1550-003005 Exhaust Gas Re-circulation (EGR) Valve (EGR Cooler Piping and Air Vent)

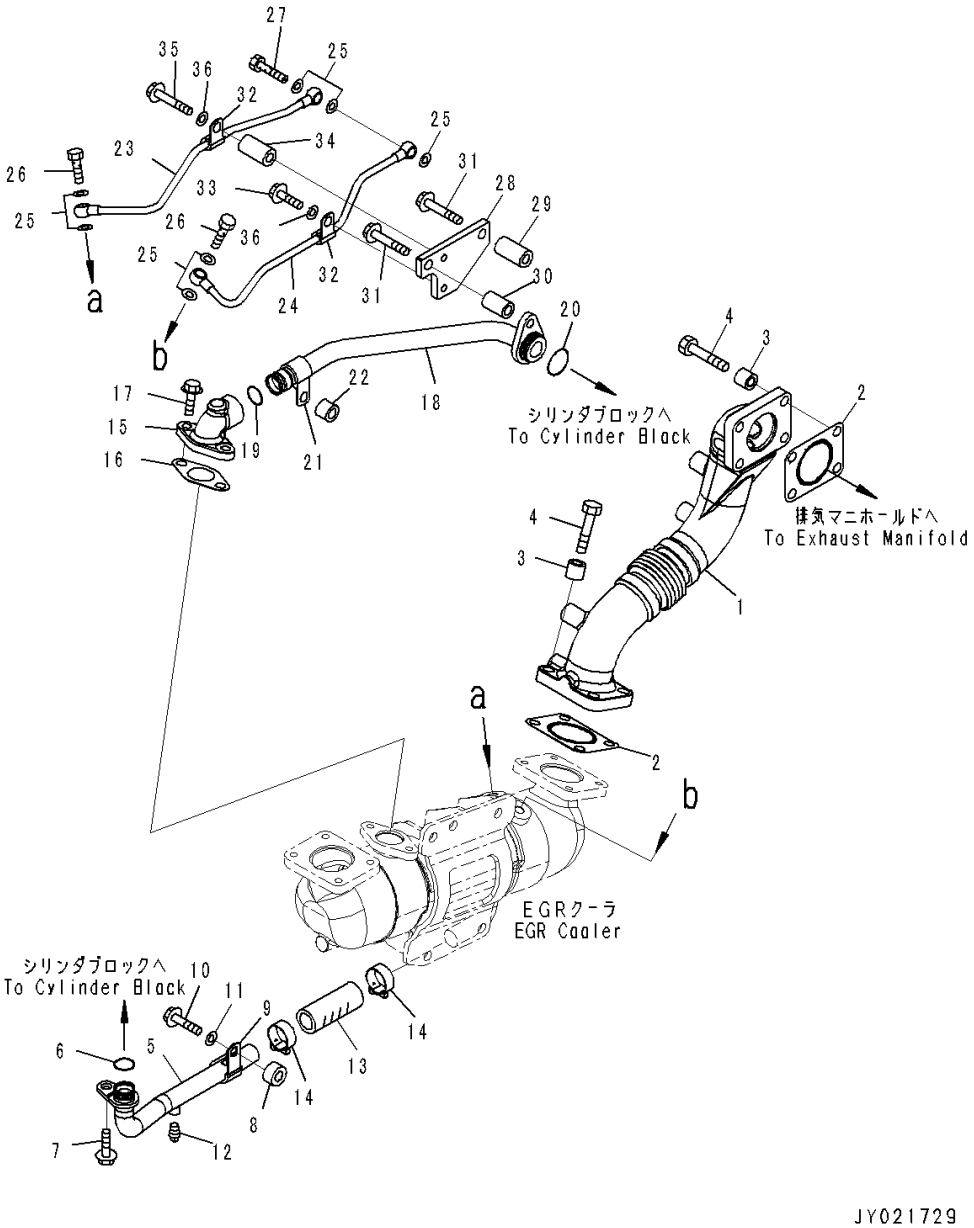

Index	Code	Part Number	Description	Qty	Serial Number
1		6251-11-9110	Tube, Exhaust Gas	1	567555-
2		6261-11-9520	Gasket	2	567555-
3		6631-11-5630	Spacer	8	567555-
4		6251-11-9350	Bolt	8	567555-
5		6251-61-7210	Tube, Water Inlet	1	567555-
6		07000-A2021	O-ring	1	567555-
7		01435-01025	Bolt	1	567555-
8		6162-63-3910	Spacer	1	567555-
9		600-051-6220	Clip	1	567555-
10		01435-01040	Bolt	1	567555-
11		01643-31032	Washer	1	567555-
12		07042-A0108	Plug	1	567555-
13		6251-61-7220	Hose	1	566939-
14		07281-00359	Clamp, Hose	2	567555-
15		6251-61-7250	Connector, Water	1	567555-
16		6210-61-6551	Gasket	1	567555-
17		01435-01025	Bolt	2	567555-
18		6251-61-7410	Tube, Water	1	567555-
19		07000-A2021	O-ring	1	567555-
20		07000-A3029	O-ring	1	567555-
21		600-051-6220	Clip	1	567555-
22		175-79-33240	Collar	1	567555-
23		6251-61-7620	Tube, Air Vent	1	567555-
24		6251-61-7630	Tube, Air Vent	1	567555-
25		07005-01212	Seal, Washer	7	567555-
26		07206-30812	Bolt, Joint	2	567555-
27		6354-71-5560	Bolt, Joint	1	567555-
28		6251-61-7240	Plate	1	567555-
29		6933-21-6330	Spacer	1	567555-
30		6131-21-6770	Collar	1	567555-
31		01435-01065	Bolt	2	567555-
32		600-051-6080	Clip	2	567555-
33		01435-01020	Bolt	1	567555-
34		6933-21-6330	Spacer	1	567555-
35		01435-01060	Bolt	1	567555-
36		01643-31032	Washer	2	567555-

FIG. A1550-003006 Exhaust Gas Re-circulation (EGR) Valve (EGR Valve Lubricating Oil Piping)

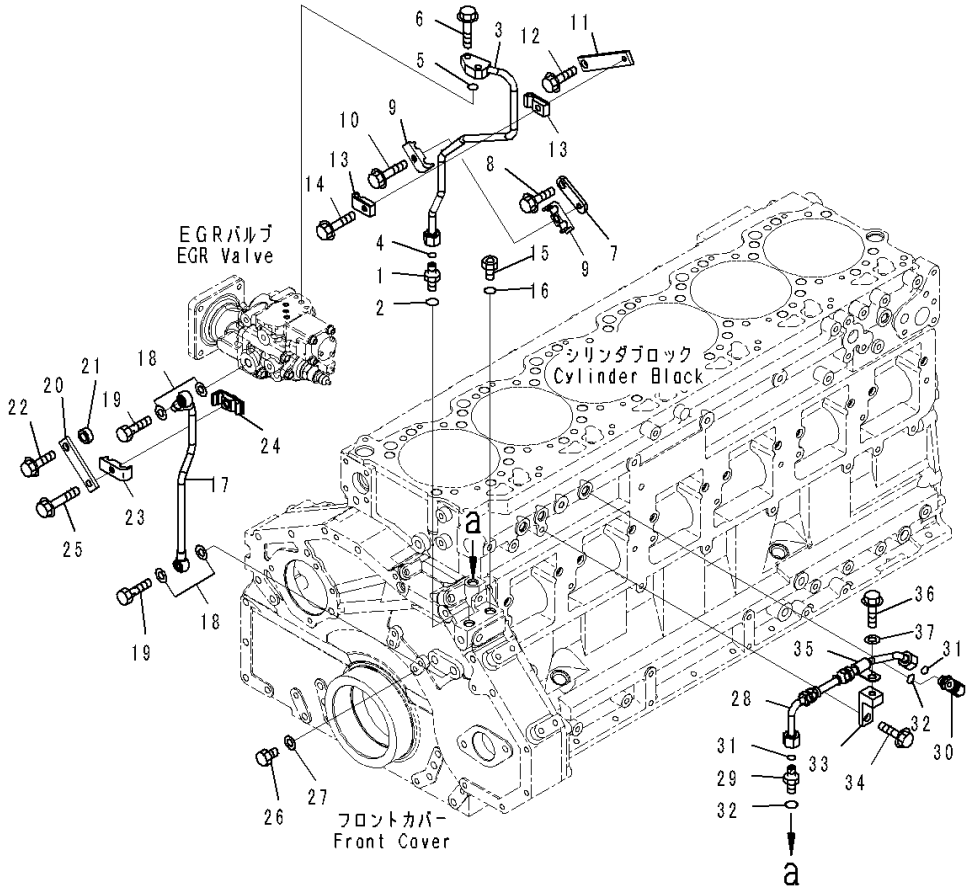

Index	Code	Part Number	Description	Qty	Serial Number
1		6251-51-9850	Union	1	567555-
2		6251-51-9890	O-ring	1	567555-
3		6251-51-9310	Tube, Supply	1	567555-
4		6251-51-9880	O-ring	1	567555-
5		07000-E2012	O-ring	1	567555-
6		01435-00825	Bolt	2	567555-
7		6251-51-9380	Plate	1	567555-
8		01435-01020	Bolt	1	567555-
9		6166-75-6821	Clamp, half	2	567555-
10		01435-00830	Bolt	1	567555-
11		6251-51-9391	Plate	1	567555-
12		01435-01020	Bolt	1	567555-
13		6166-75-6810	Clamp	2	567555-
14		01435-00835	Bolt	1	567555-
15		6215-81-9520	Plug	1	567555-
16		6251-51-9890	O-ring	1	567555-
17		6251-51-9510	Tube	1	567555-
18		07005-01412	Seal, Washer	4	567555-
19		07206-31014	Bolt, Joint	2	567555-
20		6251-51-8410	Plate	1	567555-
21		6132-21-4630	Spacer	1	567555-
22		01435-01035	Bolt	1	567555-
23		6166-75-6821	Clamp, half	1	567555-
24		6261-51-9481	Clamp, half	1	567555-
25		01435-00840	Bolt	1	567555-
26		6110-53-5910	Plug	1	567555-
27		07005-01412	Seal, Washer	1	567555-
28		6251-51-9220	Tube, Oil Supply	1	567555-
29		6251-51-9850	Union	1	567555-
30		6251-51-9810	Elbow	1	567555-
31		6251-51-9880	O-ring	2	567555-
32		6251-51-9890	O-ring	2	567555-
33		6251-51-9230	Bracket	1	567555-
34		01435-01030	Bolt	1	567555-
35		600-051-6100	Clip	1	567555-
36		01435-01020	Bolt	1	567555-
37		01643-31032	Washer	1	567555-

FIG. A1110-001001 Rocker Arm Housing Cover

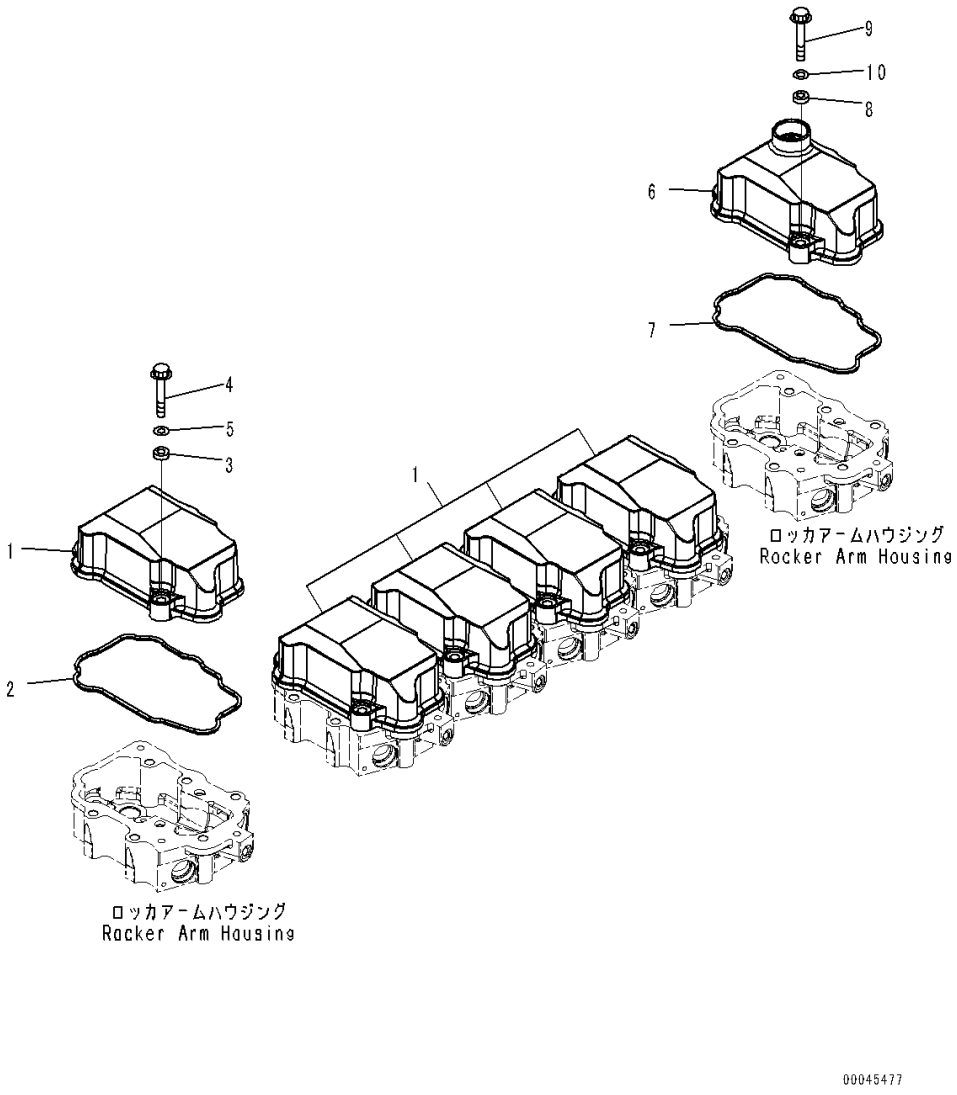

Index	Code	Part Number	Description	Qty	Serial Number
		6251-11-8100	Cover Assembly	5	567555-
1		6251-11-8110	• Cover, Rocker Arm Housing	1	567555-
2		6251-11-8810	• Gasket	1	567555-
3		6150-11-8820	Rubber, Seal	10	567555-
4		6150-81-9370	Bolt	10	567555-
5		01640-21016	Washer	10	567555-
		6251-11-8200	Cover Assembly	1	567555-
6		6251-11-8150	• Cover, Rocker Arm Housing	1	567555-
7		6251-11-8810	• Gasket	1	567555-
8		6150-11-8820	Rubber, Seal	2	567555-
9		6150-81-9370	Bolt	2	567555-
10		01640-21016	Washer	2	567555-

FIG. A1111-001001 Rocker Arm Housing Cover Accessory (Breather and Hose)

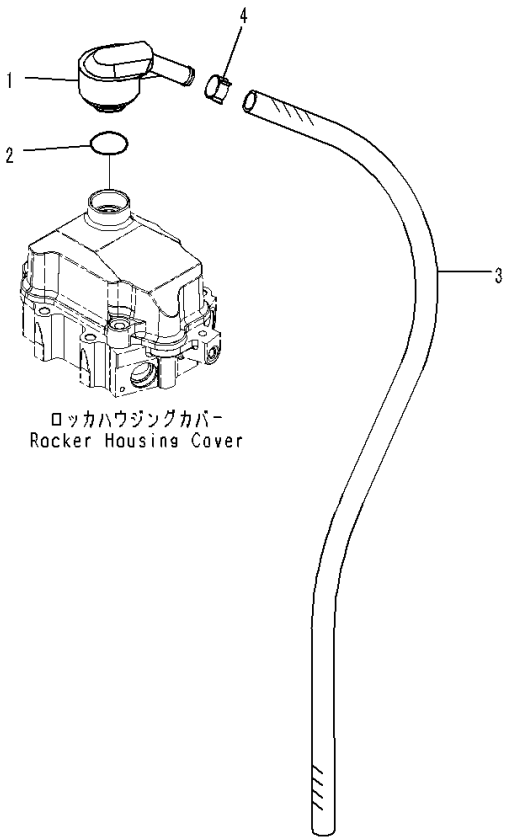

Index	Code	Part Number	Description	Qty	Serial Number
1		6150-21-6710	Breather	1	567555-
2		6114-21-5190	O-ring	1	567555-
3		07287-01913	Hose	1	567555-
4		07285-00220	Clip	1	567555-

ENGINE CYLINDER BLOCK AND ITS RELATED PARTS

FIG. A2110-001001 Oil Pan and Suction Tube

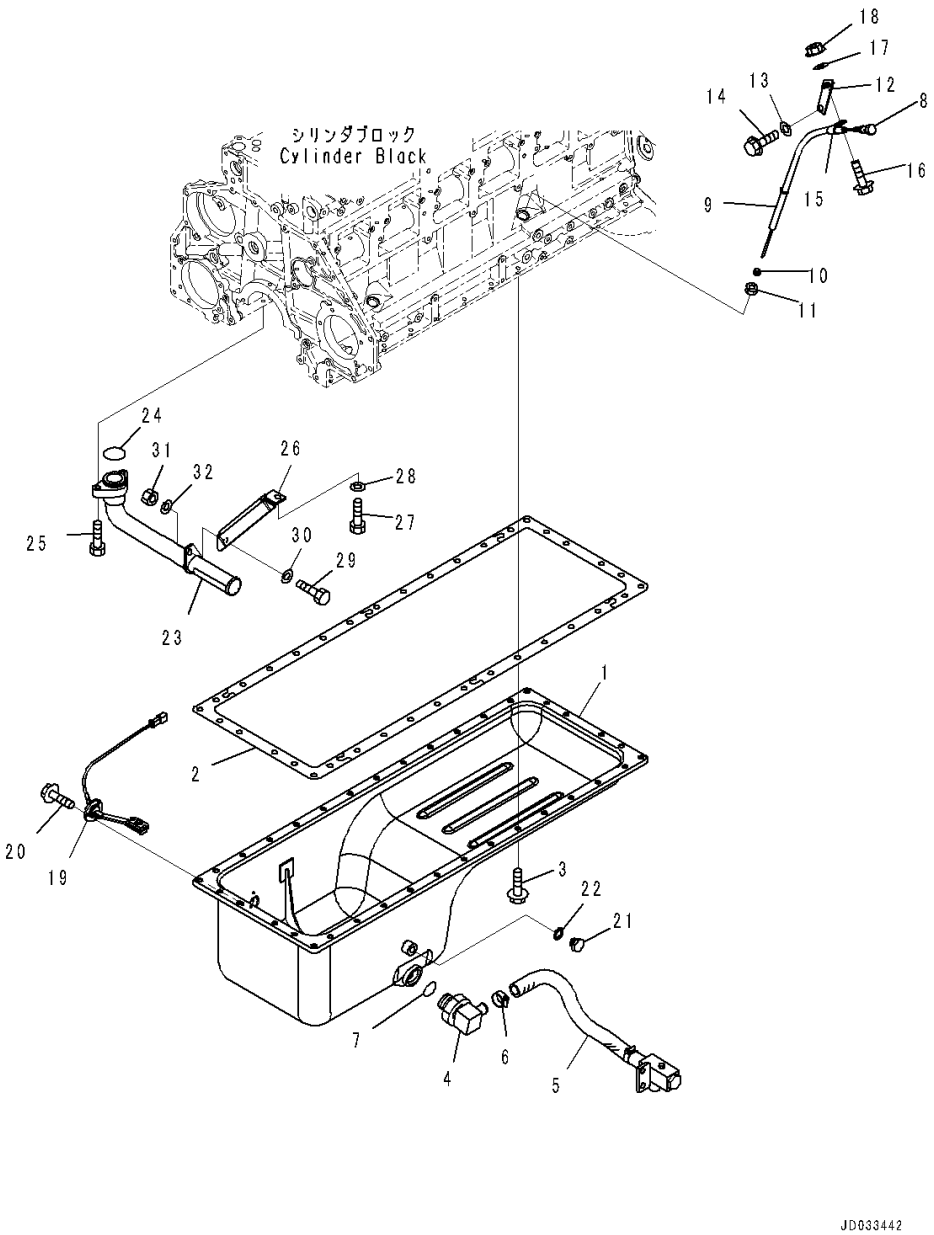

Index	Code	Part Number	Description	Qty	Serial Number
1		6150-21-5550	Pan, Oil	1	567555-
2		6150-21-5813	Gasket	1	567555-
3		01435-01025	Bolt	36	567555-
		6251-51-6620	Hose Assembly, Oil Drain	1	567555-
4		6251-51-6630	• Elbow Assembly	1	567555-
5		6251-51-6640	• Hose Assembly	1	567555-
6		07281-00359	• • Clamp, Hose	1	567555-
7		07002-23634	O-ring	1	567555-
8		6207-21-5340	Gauge	1	567555-
9		6251-21-5410	Guide, Oil Gauge	1	567555-
10		6150-21-5920	Collar	1	567555-
11		6150-21-5930	Nut	1	567555-
12		6251-21-5510	Bracket	1	567555-
13		01643-31032	Washer	1	567555-
14		01435-01025	Bolt	1	567555-
15		04434-51310	Clip	1	567555-
16		01435-01025	Bolt	1	567555-
17		01643-31032	Washer	1	567555-
18		01584-01008	Nut	1	567555-
19		6741-81-9220	Switch, Oil Level	1	567555-
		7861-91-4220	• O-ring	1	567555-
20		01435-00612	Bolt	3	567555-
21		6672-12-6290	Plug	1	567555-
22		07005-01612	Seal, Washer	1	567555-
23		6150-51-6330	Strainer	1	567555-
24		07000-73045	O-ring	1	567555-
25		01010-81035	Bolt	2	567555-
26		6150-51-6340	Bracket	1	567555-
27		01010-81020	Bolt	1	567555-
28		01643-31032	Washer	1	567555-
29		01010-81030	Bolt	1	567555-
30		01643-31032	Washer	1	567555-
31		01580-01008	Nut	1	567555-
32		01643-31032	Washer	1	567555-

FIG. A2410-001001 Camshaft (Camshaft and Cam Follower)

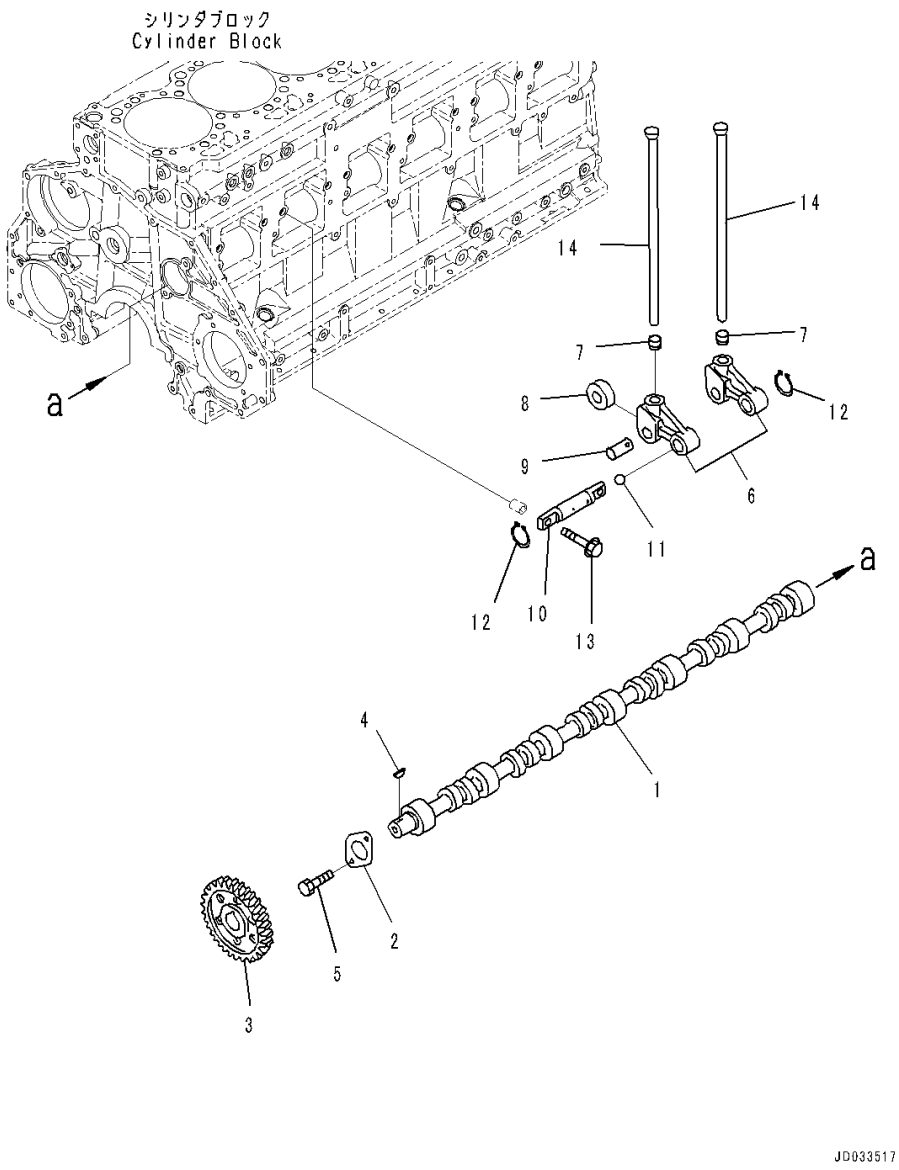

Index	Code	Part Number	Description	Qty	Serial Number
		6150-41-1012	Camshaft Assembly	1	567555-
1	C1		• Camshaft	1	567555-
2		6150-41-1130	• Plate, Thrust	1	567555-
3		6150-41-1120	• Gear, Camshaft	1	567555-
4		04010-00725	• Key, Woodruff	1	567555-
5		01010-81022	Bolt	2	567555-
		6150-41-2302	Lever Assembly	12	567555-
6	C1		• Lever	1	567555-
7	C1		• Socket	1	567555-
8	C1		• Roller	1	567555-
9	C1		• Pin	1	567555-
		6150-41-2401	Shaft Assembly	6	567555-
10	C1		• Shaft	1	567555-
11		6150-81-8420	• Ball	1	567555-
12		04064-02012	Ring, Snap	12	567555-
13		6150-41-2450	Bolt	12	567555-
14		6150-41-3111	Rod, Push	12	567555-

FIG. A2410-001002A Camshaft (Rocker Arm and Housing)

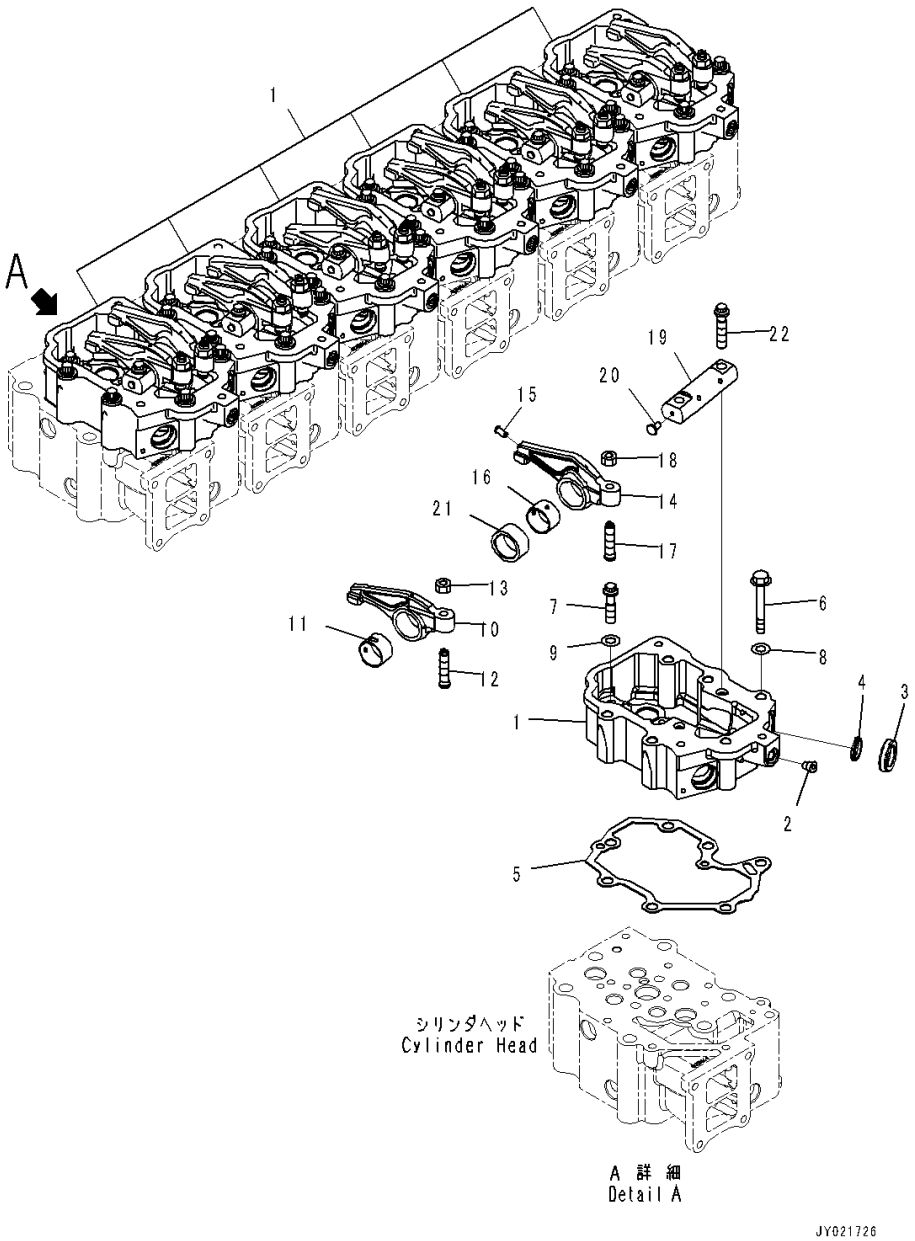

Index	Code	Part Number	Description	Qty	Serial Number
		6251-11-7300	Housing Assembly	6	567555-
		6251-11-7100	• Housing Assembly	1	567555-
1		6251-11-7110	• • Housing, Rocker Arm	1	567555-
2		07043-30108	• • Plug	1	567555-
3		6251-11-8830	• Seal	1	567555-
4		6251-11-8840	• Ring	1	567555-
5		6251-11-7220	Gasket	6	567555-
6		01437-01075	Bolt	36	567555-
7		6251-71-1170	Bolt	6	567555-
8		01643-31032	Washer	36	571435-
9		01643-31032	Washer	6	571435-
		6150-41-5400	Arm Assembly, Intake	6	567555-
10	C1		• Arm, Rocker	1	567555-
11		6150-41-5420	• Bushing	1	567555-
12		6150-41-5541	Screw	6	567555-
13		01582-01008	Nut	6	567555-
		6154-41-5500	Arm Assembly, Exhaust	6	567555-
14	C1		• Arm, Rocker	1	567555-
15		6162-43-5340	• Rivet	1	567555-
16		6150-41-5420	• Bushing	1	567555-
17		6150-41-5541	Screw	6	567555-
18		01582-01008	Nut	6	567555-
		6150-42-5300	Rocker Arm Assembly	6	567555-
19	C1		• Shaft	1	567555-
20		6710-41-5340	• Rivet	1	567555-
21		6154-41-5321	Collar	6	567555-
22		6150-81-9370	Bolt	12	567555-

FIG. A2041-002001 Front Cover Accessory (Mounting Bolt and Pointer)

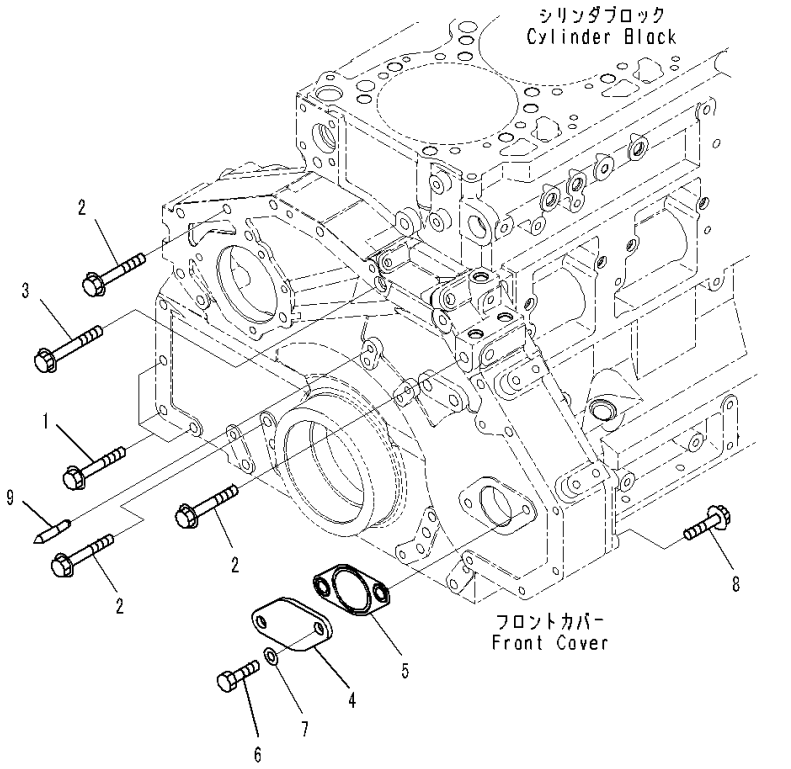

Index	Code	Part Number	Description	Qty	Serial Number
1		01435-01070	Bolt	3	567555-
2		01435-01080	Bolt	7	567555-
3		01437-01075	Bolt	1	567555-
4		6251-21-3211	Plate	1	567555-
5		6251-21-3231	Gasket	1	567555-
6		01050-51225	Bolt	2	567555-
7		6251-21-3250	Gasket	2	567555-
8		6150-81-9130	Bolt	4	567555-
9		6150-22-3360	Pointer	1	567555-

FIG. A2040-001001 Front Cover

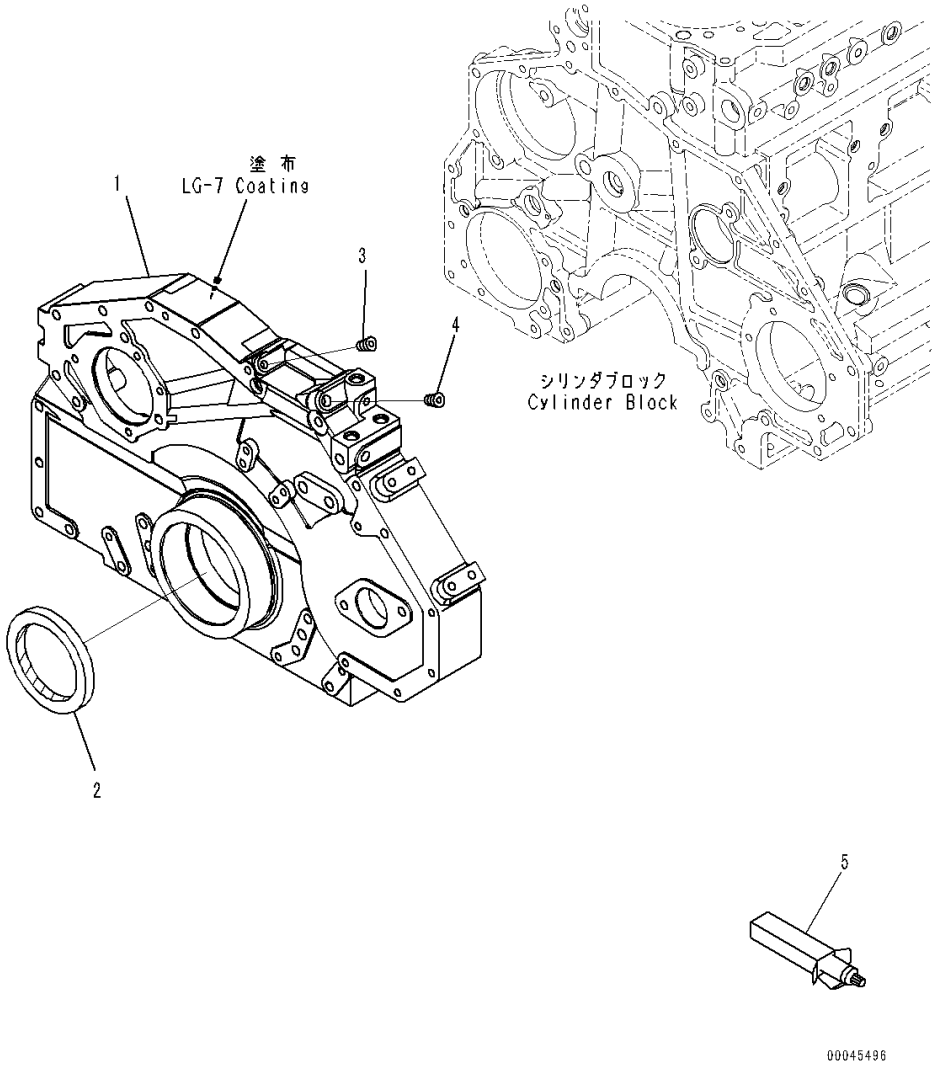

Index	Code	Part Number	Description	Qty	Serial Number
1		6251-21-3120	Cover	1	567555-
2		6150-21-3230	Seal, Front	1	567555-
3		07043-70108	Plug	3	567555-
4		07043-70211	Plug	3	567555-
5		09920-00150	Liquid gasket, LG-7, 150G	AR	567555-

FIG. A2050-001001 Idle Gears

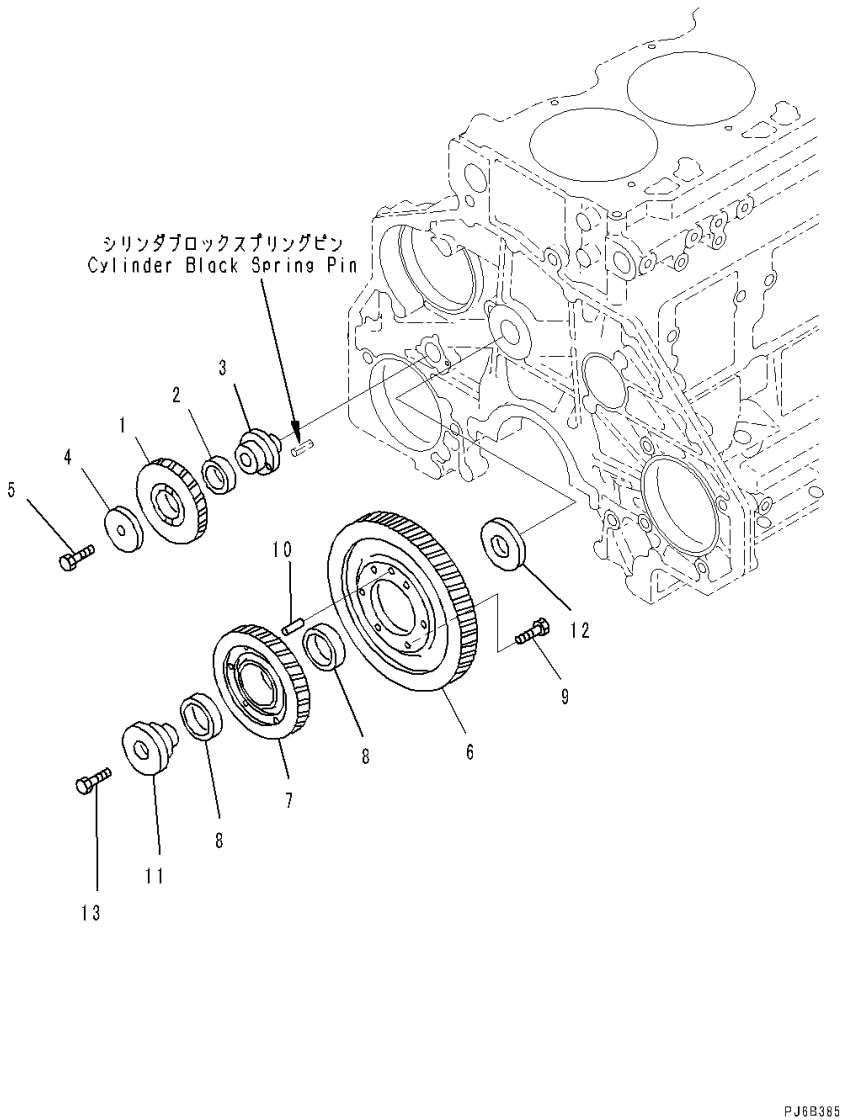

Index	Code	Part Number	Description	Qty	Serial Number
		6150-31-6100	Gear Assembly	1	567555-
1	C1		• Gear, Idler	1	567555-
2		6150-31-6120	• Bushing	1	567555-
3		6150-21-2510	Shaft, Idler Gear	1	567555-
4		6152-32-6110	Plate, Thrust	1	567555-
5		01010-61460	Bolt	1	567555-
6		6154-31-6310	Gear, Idler	1	567555-
		6154-31-6200	Gear Assembly	1	567555-
7	C1		• Gear, Idler	1	567555-
8		6150-31-6220	• Bushing	2	567555-
9		01010-81025	Bolt	6	567555-
10		6127-21-1260	Pin, Dowel	1	567555-
11		6150-21-2411	Shaft, Idler Gear	1	567555-
12		6150-21-2421	Plate, Thrust	1	567555-
13		6150-21-2431	Bolt	1	567555-

FIG. A2210-001001A Flywheel Housing

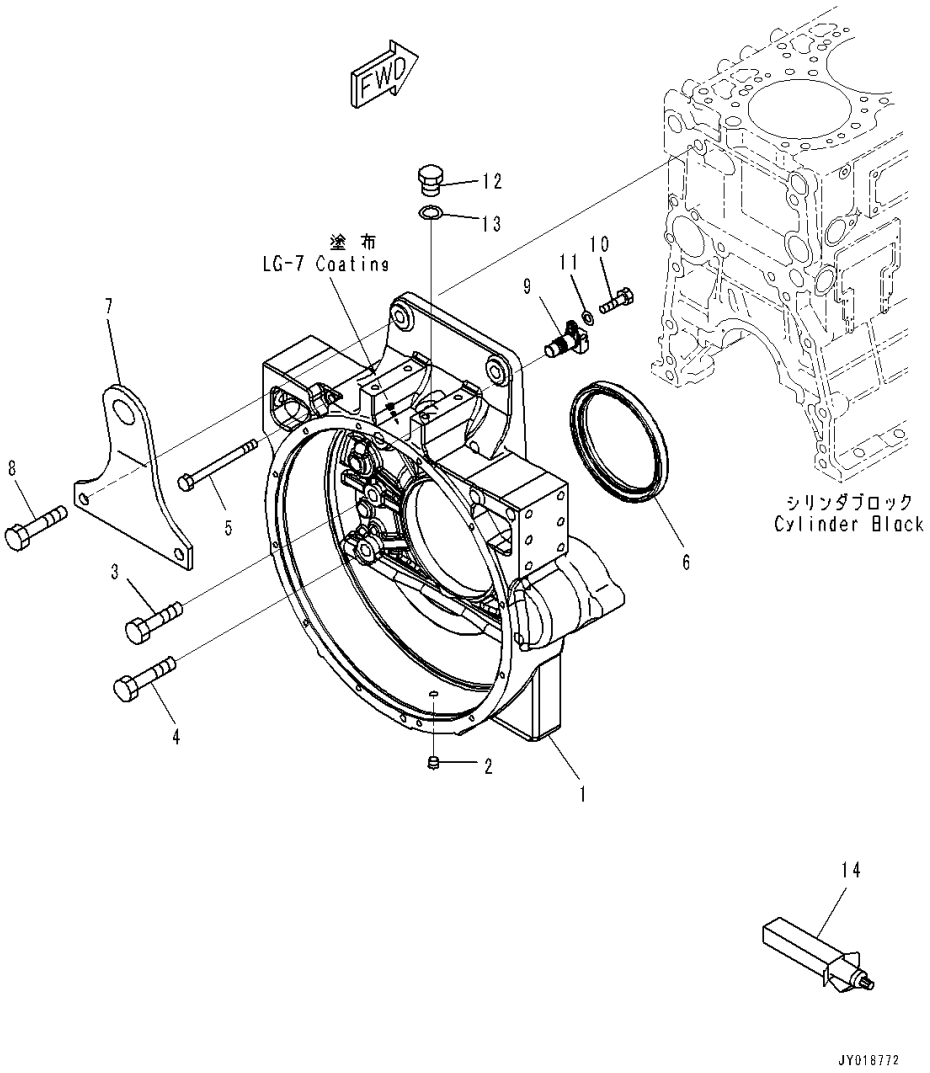

Index	Code	Part Number	Description	Qty	Serial Number
1		6251-21-4141	Housing, Flywheel	1	567555-
2		07043-70211	Plug	1	567555-
3		01010-61650	Bolt	6	567555-
4		01010-61660	Bolt	2	567555-
5		01011-81030	Bolt	1	567555-
6		6151-21-4161	Seal, Rear	1	567555-
7		6150-21-3930	Plate, Hanger	1	567555-
8		01010-61660	Bolt	2	567555-
9		6261-81-2902	Sensor Assembly, Revolution	1	567555-
10		01010-80820	Bolt	1	571306-
11		01643-30823	Washer	1	571306-
12		6114-11-8910	Plug	1	567555-
13		07005-02216	Seal, Washer	1	567555-
14		09920-00150	Liquid gasket, LG-7, 150G	AR	567555-

FIG. A2230-001001 Flywheel

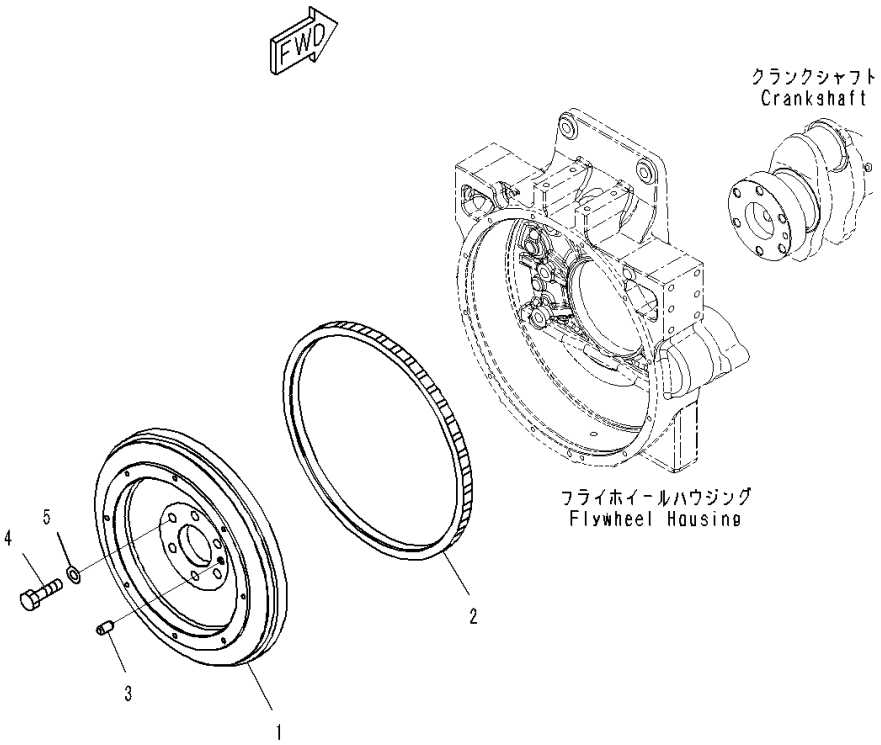

Index	Code	Part Number	Description	Qty	Serial Number
		6251-31-4620	Flywheel Assembly	1	567555-
1	C1		• Flywheel	1	567555-
2		6150-31-1341	• Gear, Ring	1	567555-
3		6156-31-4610	Pin, Dowel	1	567555-
4		01050-31645	Bolt	6	567555-
5		01643-31645	Washer	6	567555-

FIG. A2370-001001 Crank Pulley (For Hardened Pulley)

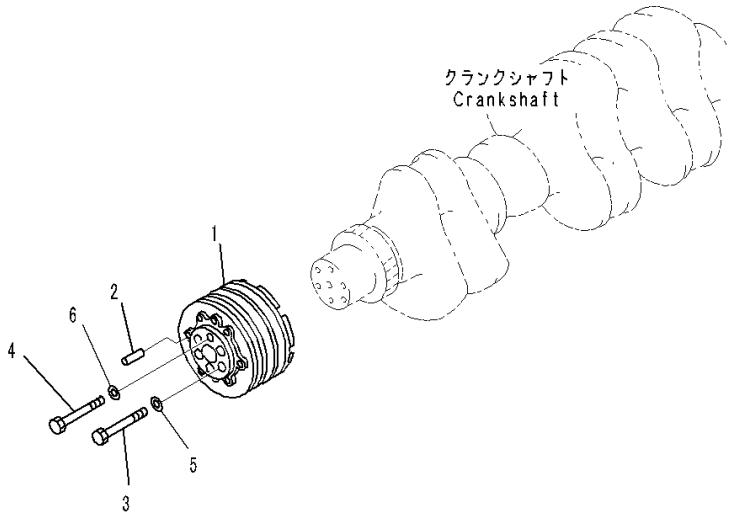

Index	Code	Part Number	Description	Qty	Serial Number
1		6155-31-1560	Pulley, Hardening	1	567555-
2		04020-01228	Pin, Dowel	1	567555-
3		01051-51635	Bolt	5	567555-
4		01051-51430	Bolt	1	567555-
5		6150-31-1810	Washer	5	567555-
6		6130-32-1361	Washer	1	567555-

FIG. A2370-004001 Crank Pulley (Non Hardening Spec.)

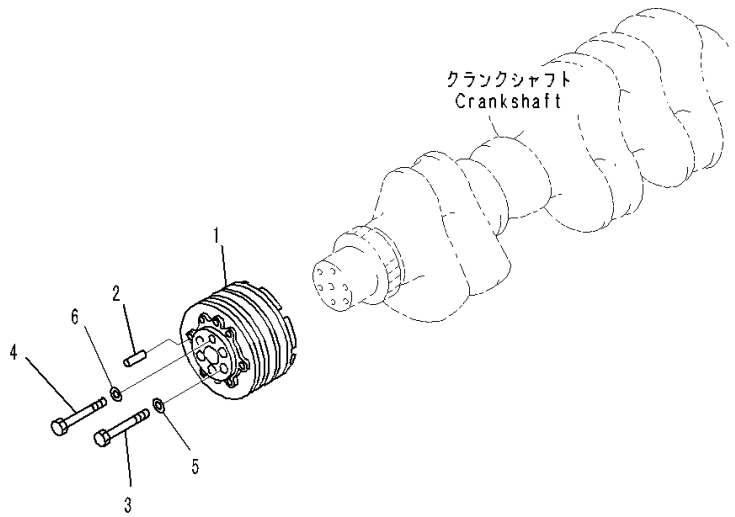

Index	Code	Part Number	Description	Qty	Serial Number
1		6155-31-1520	Pulley, Hardening	1	567555-
2		04020-01228	Pin, Dowel	1	567555-
3		01051-51635	Bolt	5	567555-
4		01051-51430	Bolt	1	567555-
5		6150-31-1810	Washer	5	567555-
6		6130-32-1361	Washer	1	567555-

FIG. A2010-001001 Cylinder Block

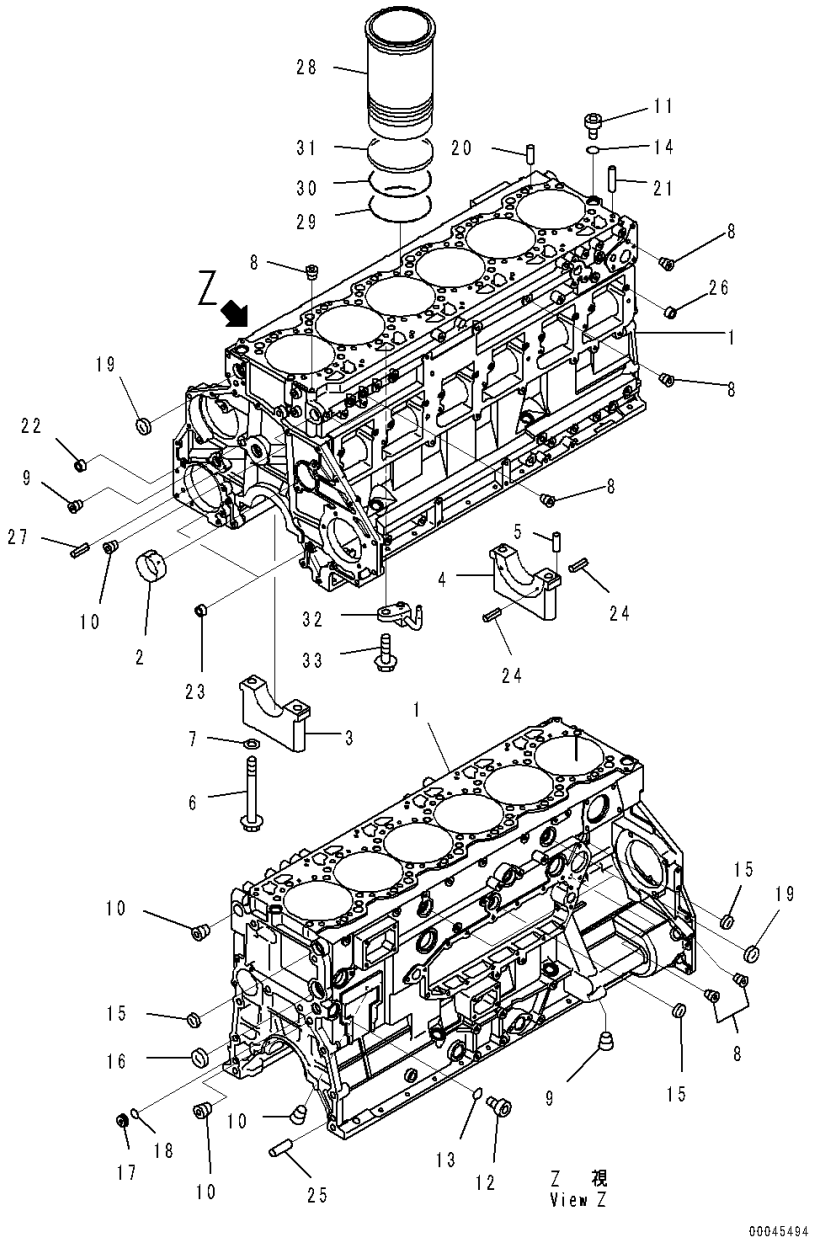

Index	Code	Part Number	Description	Qty	Serial Number
		6251-21-1100	Cylinder Block Assembly	1	567555-
1	C1		• Block, Cylinder	1	567555-
2		6150-21-1490	• Bushing, Camshaft	7	567555-
3		6150-21-1210	• Cap, Main Metal, No.1, 2, 3, 4, 5, 6	6	567555-
4		6150-21-1250	• Cap, Main Metal, No.7	1	567555-
5		04020-00514	• Pin, Dowel	2	567555-
6		6150-21-1710	• Bolt	14	567555-
7		01643-31645	• Washer	14	567555-
8		07043-70108	• Plug	8	567555-
9		07043-70211	• Plug	3	567555-
10		07043-70617	• Plug	3	567555-
11		07040-12414	• Plug	1	567555-
12		07040-13016	• Plug	1	567555-
13		07002-23034	• O-ring	1	567555-
14		07002-22434	• O-ring	1	567555-
15		07046-43016	• Plug	3	567555-
16		07046-44016	• Plug	1	567555-
17		6154-21-1981	• Plug	1	567555-
18		07000-72022	• O-ring	1	567555-
19		07046-43516	• Plug	3	567555-
20		04020-00820	• Pin, Dowel	12	567555-
21		6150-21-1170	• Tube	1	567555-
22		6150-41-2430	• Pin	1	567555-
23		6150-41-2440	• Pin	2	567555-
24		04025-00408	• Pin, Spring	6	567555-
25		6150-21-4770	• Pin, Dowel	2	567555-
26		6150-41-2430	• Pin	12	567555-
27		04025-00512	Pin, Spring	1	567555-
28		6154-21-2220	Liner, Cylinder	6	567555-
29		6150-21-2230	O-ring, Lower	6	567555-
30		6251-21-2240	O-ring, Center	6	567555-
31		6150-21-2250	Seal, Crevice	6	567555-
32		6154-21-1810	Nozzle, Piston Cooling	6	567555-
33		01435-00816	Bolt	6	567555-

FIG. A2011-001001 Cylinder Block Accessory (Oil Pressure Sensor and Blind Cover)

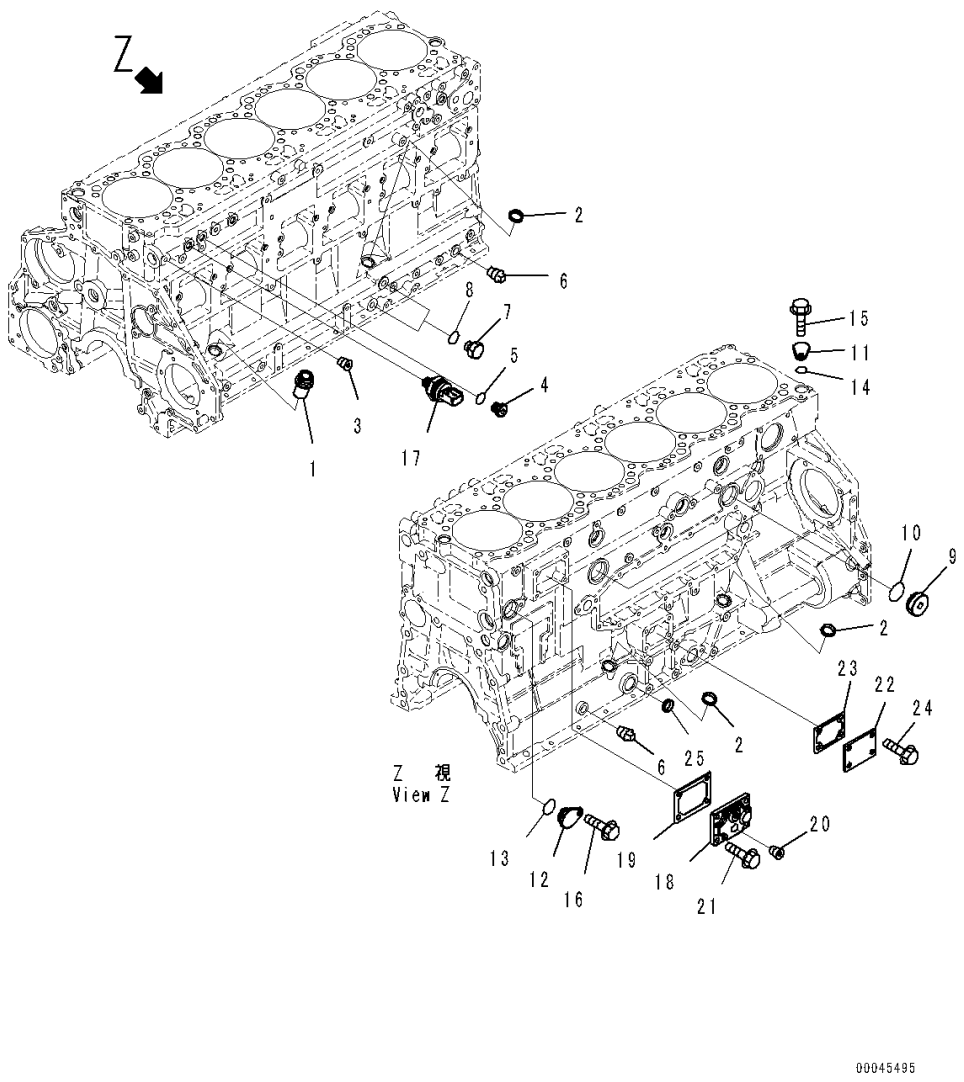

Index	Code	Part Number	Description	Qty	Serial Number
1		6150-21-5910	Bushing, Oil Gauge Guide	1	567555-
2		07046-22010	Plug	3	567555-
3		07042-70108	Plug	1	567555-
4		6215-81-9520	Plug	1	567555-
5		6251-51-9890	O-ring	1	567555-
6		07042-70312	Plug	2	567555-
7		6110-53-5910	Plug	2	567555-
8		07005-01412	Seal, Washer	2	567555-
9		6150-21-1180	Plug	2	567555-
10		6150-21-1190	O-ring	2	567555-
11		6150-22-6110	Cover, Water	1	567555-
12		6150-22-6120	Cover, Water	1	567555-
13		07000-03030	O-ring	1	567555-
14		07000-02021	O-ring	1	567555-
15		01435-01020	Bolt	1	567555-
16		01435-01020	Bolt	1	567555-
17		6219-81-1961	Sensor Assembly, Oil Pressure	1	567555-
		6219-81-1991	• O-ring	1	567555-
18		6251-21-1970	Cover	1	567555-
19		6210-21-1971	Gasket	1	567555-
20		07043-A0415	Plug	1	567555-
21		01435-01025	Bolt	4	567555-
22		6306-21-4710	Plate	1	567555-
23		6206-21-6871	Gasket	1	567555-
24		01435-01020	Bolt	2	567555-
25		07046-42816	Plug	1	567555-

FIG. A2011-002001 Cylinder Block Accessory (For Cold Area Specification A (-30 deg C))

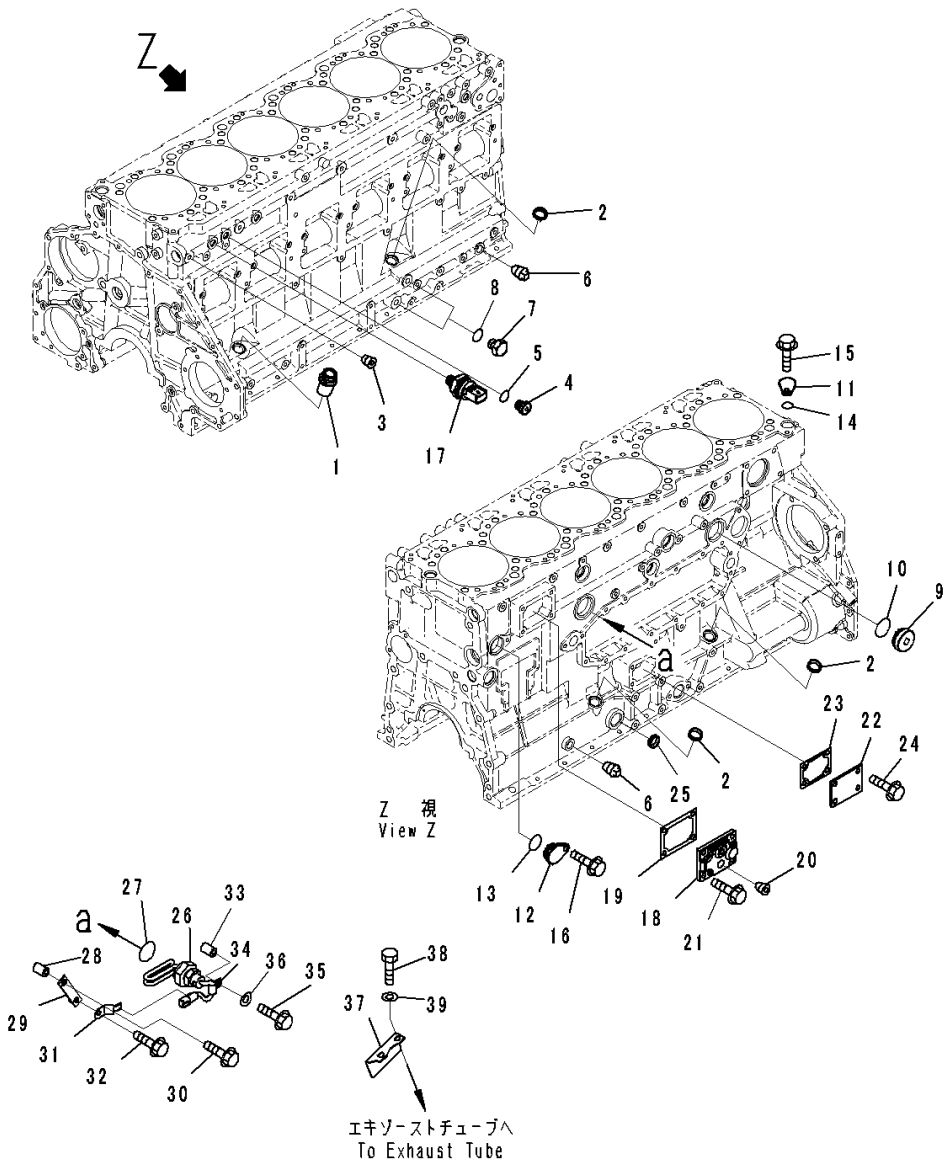

Index	Code	Part Number	Description	Qty	Serial Number
1		6150-21-5910	Bushing	1	567555-
2		07046-22010	Plug	3	567555-
3		07042-70108	Plug	1	567555-
4		6215-81-9520	Plug	1	567555-
5		6251-51-9890	O-ring	1	567555-
6		07042-70312	Plug	2	567555-
7		6110-53-5910	Plug	2	567555-
8		07005-01412	Seal, Washer	2	567555-
9		6150-21-1180	Plug	1	567555-
10		6150-21-1190	O-ring	1	567555-
11		6150-22-6110	Cover	1	567555-
12		6150-22-6120	Cover	1	567555-
13		07000-03030	O-ring	1	567555-
14		07000-02021	O-ring	1	567555-
15		01435-01020	Bolt	1	567555-
16		01435-01020	Bolt	1	567555-
17		6219-81-1961	Sensor Assembly	1	567555-
		6219-81-1991	• O-ring	1	567555-
18		6251-21-1970	Cover	1	567555-
19		6210-21-1971	Gasket	1	567555-
20		07043-A0415	Plug	1	567555-
21		01435-01025	Bolt	4	567555-
22		6306-21-4710	Plate	1	567555-
23		6206-21-6871	Gasket	1	567555-
24		01435-01020	Bolt	2	567555-
25		07046-42816	Plug	1	567555-
26		600-815-9240	Heater, Water	1	567555-
27		6150-21-1190	O-ring	1	567555-
28		6631-11-5630	Spacer	1	567555-
29		421-62-11940	Plate	1	567555-
30		01435-01050	Bolt	1	567555-
31		08193-20010	Clip	1	567555-
32		01435-01016	Bolt	1	567555-
33		6166-11-5391	Spacer	1	567555-
34		600-051-2080	Clip	1	567555-
35		01435-01060	Bolt	1	567555-
36		01643-31032	Washer	1	567555-
37		6251-81-8810	Cover	1	567555-
38		6251-11-9360	Bolt	2	567555-
39		01643-31032	Washer	2	567555-

FIG. A2310-001001 Crankshaft

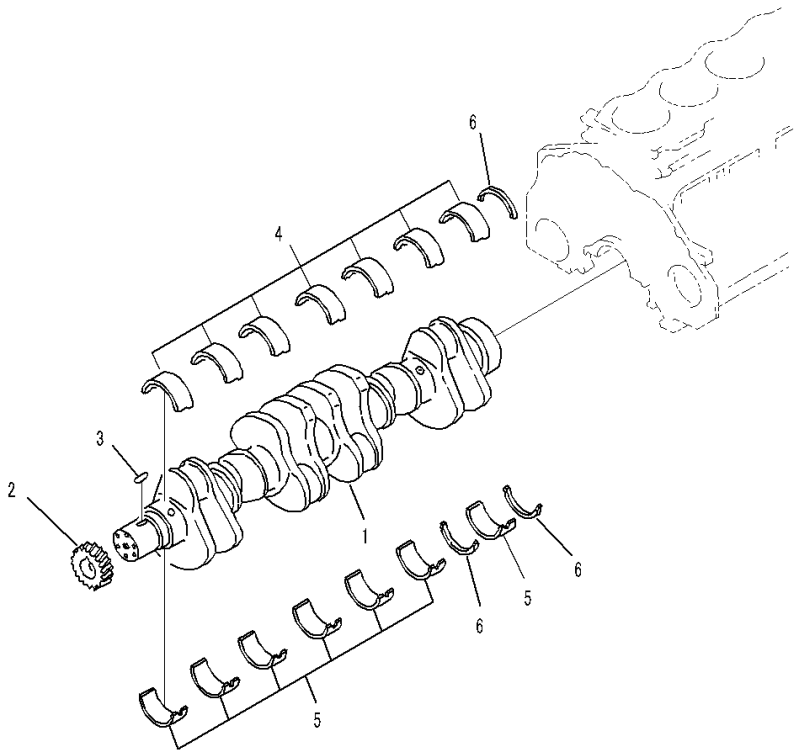

Index	Code	Part Number	Description	Qty	Serial Number
		6252-31-1010	Crankshaft Assembly	1	572136-
1	C1		• Crankshaft	1	567555-
2		6150-35-1120	• Gear, Crankshaft	1	567555-
3		6150-31-1130	• Key	1	567555-
		6150-21-8010	Main Metal Assembly, Standard	7	567555-
		6150-29-8010	Main Metal Assembly, Undersize 0.25mm	7	567555-
		6150-28-8010	Main Metal Assembly, Undersize 0.50mm	7	567555-
		6150-27-8010	Main Metal Assembly, Undersize 0.75mm	7	567555-
		6150-26-8010	Main Metal Assembly, Undersize 1.00mm	7	567555-
4	C1		• Metal, Upper	1	567555-
	C1		• Metal, Upper	1	567555-
	C1		• Metal, Upper	1	567555-
	C1		• Metal, Upper	1	567555-
	C1		• Metal, Upper	1	567555-
5	C1		• Metal, Lower	1	567555-
	C1		• Metal, Lower	1	567555-
	C1		• Metal, Lower	1	567555-
	C1		• Metal, Lower	1	567555-
	C1		• Metal, Lower	1	567555-
6		6150-21-8050	Metal Assembly, Standard	1	567555-
		6150-29-8050	Metal Assembly, Oversize 0.25mm	1	567555-
		6150-28-8050	Metal Assembly, Oversize 0.50mm	1	567555-
		6150-27-8050	Metal Assembly, Oversize 0.75mm	1	567555-
		6150-26-8050	Metal Assembly, Oversize 1.00mm	1	567555-
	C1		• Metal, Thrust Standard	3	567555-
	C1		• Metal, Thrust Oversize 0.25mm	3	567555-
	C1		• Metal, Thrust Oversize 0.50mm	3	567555-
	C1		• Metal, Thrust Oversize 0.75mm	3	567555-
	C1		• Metal, Thrust Oversize 1.00mm	3	567555-

FIG. A2330-001001 Vibration Damper

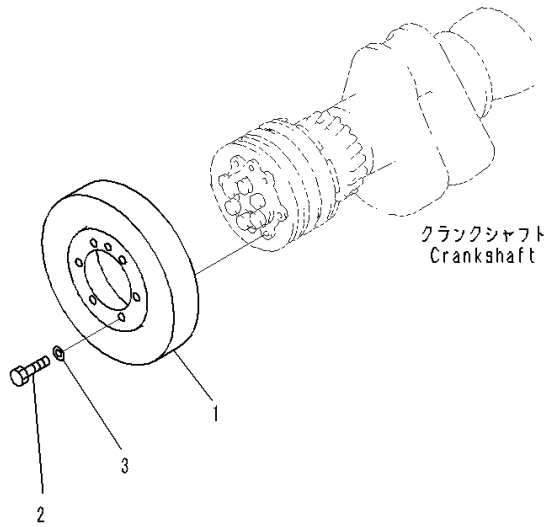

00034935

Index	Code	Part Number	Description	Qty	Serial Number
1		6155-31-8100	Damper	1	567555-
2		01010-81225	Bolt	6	567555-
3		01643-51232	Washer	6	567555-

FIG. A2350-001001 Piston and Connecting Rod

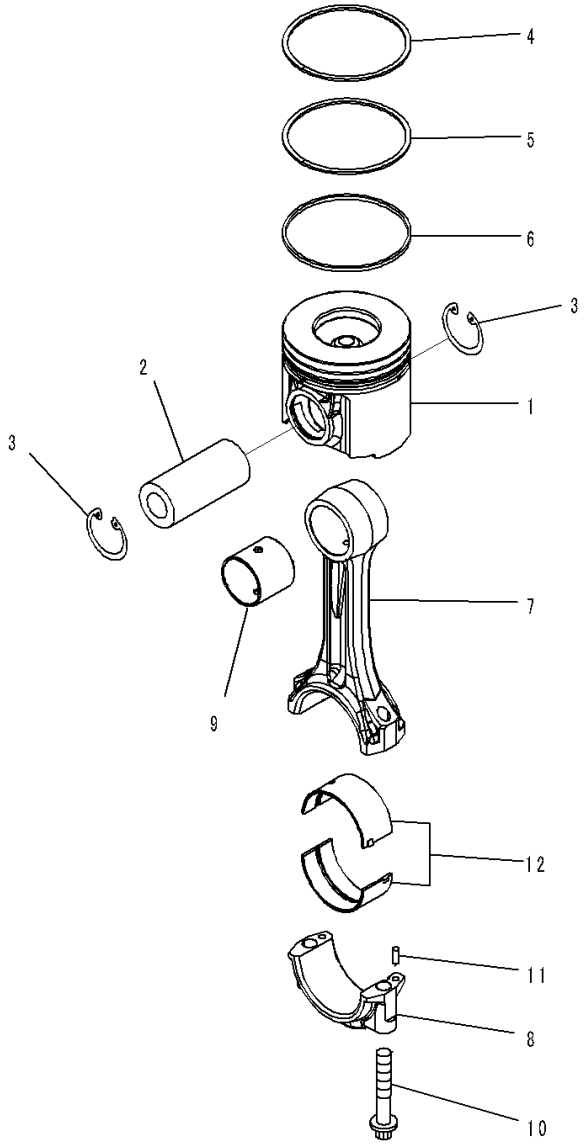

Index	Code	Part Number	Description	Qty	Serial Number
1		6251-31-2510	Piston	6	567555-
2		6151-31-2410	Pin, Piston	6	567555-
3		04065-04818	Ring, Snap	12	567555-
		6251-31-2030	Piston Ring Assembly, Per Cylinder	6	567555-
4	C1		• Ring, Top	1	567555-
5	C1		• Ring, 2nd	1	567555-
6	C1		• Ring, Oil	1	567555-
		6251-31-3100	Connecting Rod Assembly	6	567555-
7	C1		• Rod, Connecting	1	567555-
8	C1		• Cap, Connecting Rod	1	567555-
9		6251-31-3130	• Bushing	1	567555-
10		6150-31-3310	• Bolt	2	567555-
11		02400-10413	• Pin, Dowel	2	567555-
12		6151-31-3050	Metal Assembly, Standard	6	567555-
		6151-39-3050	Metal Assembly, Undersize 0.25mm	6	567555-
		6151-38-3050	Metal Assembly, Undersize 0.50mm	6	567555-
		6151-37-3050	Metal Assembly, Undersize 0.75mm	6	567555-
		6151-36-3050	Metal Assembly, Undersize 1.00mm	6	567555-
	C1		• Metal, Standard, Upper	1	567555-
	C1		• Metal, Undersize 0.25mm, Upper	1	567555-
	C1		• Metal, Undersize 0.50mm, Upper	1	567555-
	C1		• Metal, Undersize 0.75mm, Upper	1	567555-
	C1		• Metal, Undersize 1.00mm, Upper	1	567555-
	C1		• Metal, Standard, Lower	1	567555-
	C1		• Metal, Undersize 0.25mm, Lower	1	567555-
	C1		• Metal, Undersize 0.50mm, Lower	1	567555-
	C1		• Metal, Undersize 0.75mm, Lower	1	567555-
	C1		• Metal, Undersize 1.00mm, Lower	1	567555-

FIG. A2060-001001 Cam Follower Cover and Oil Filler

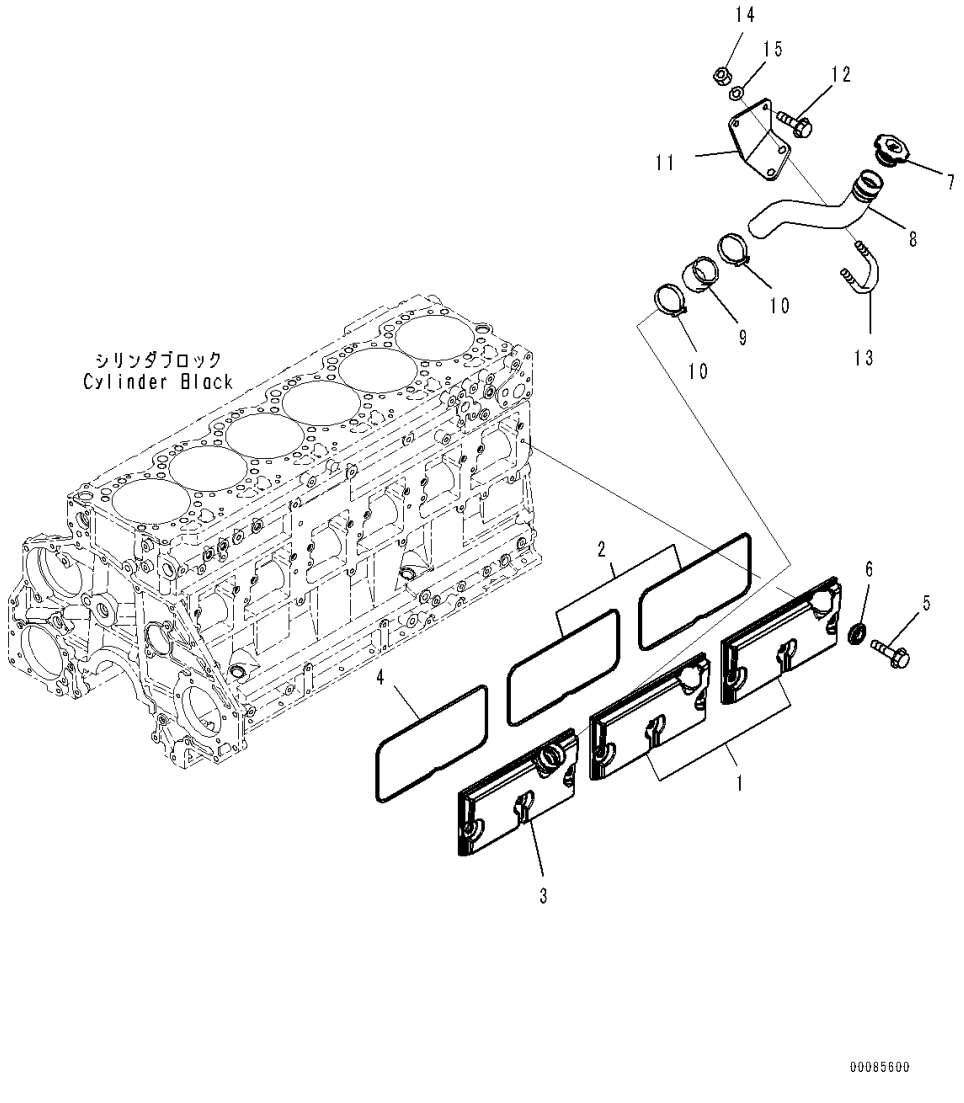

Index	Code	Part Number	Description	Qty	Serial Number
		6251-21-6400	Cover Assembly	2	567555-
1		6150-22-6430	• Cover	1	567555-
2		6251-21-6450	• Gasket	1	567555-
		6251-21-6800	Cover Assembly	1	567555-
3		6251-21-6500	• Cover Assembly	1	567555-
	C1		• • Cover	1	567555-
		6150-21-6510	• • Tube	1	567555-
4		6251-21-6450	• Gasket	1	567555-
5		6210-21-6471	Bolt	9	567555-
6		6150-21-6391	Packing	9	567555-
7		6130-12-8610	Cap	1	567555-
8		6251-21-7110	Filler, Oil	1	567555-
9		6150-21-6530	Hose	1	567555-
10		07281-00609	Clamp	2	567555-
11		6251-21-7130	Bracket	1	567555-
12		01435-01020	Bolt	2	567555-
13		07283-34346	Clip	1	567555-
14		01597-01009	Nut	2	567555-
15		01643-31032	Washer	2	567555-

FIG. A2250-002001 Engine Front Support

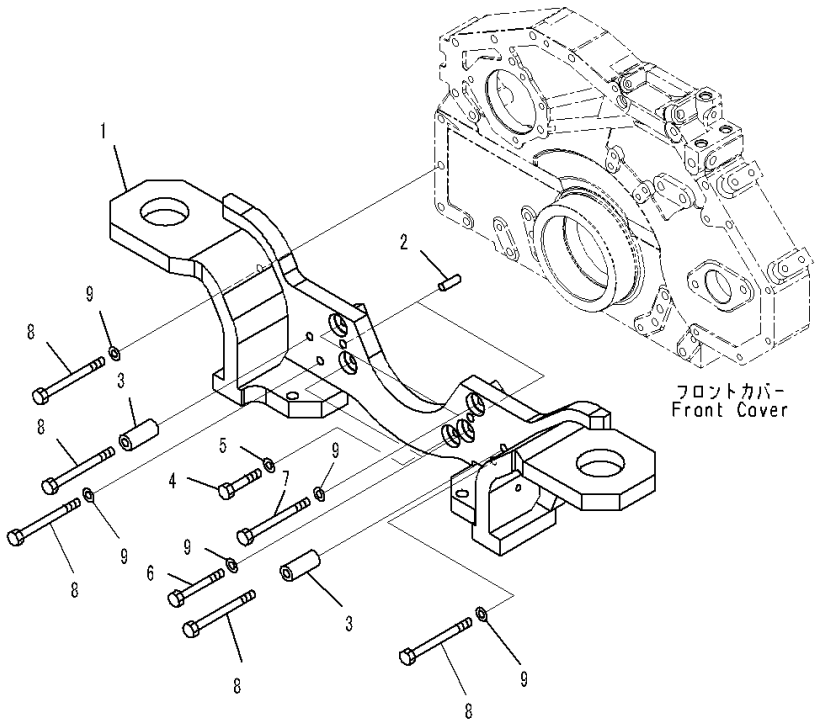

Index	Code	Part Number	Description	Qty	Serial Number
1		421-01-41121	Bracket, Front	1	567555-
2		04020-01228	Pin, Dowel	2	567555-
3		6152-51-5520	Spacer	2	567555-
4		01010-81055	Bolt	1	567555-
5		01643-31032	Washer	1	567555-
6		01011-81000	Bolt	2	567555-
7		01011-81005	Bolt	2	567555-
8		01011-81010	Bolt	5	567555-
9		01643-31032	Washer	7	567555-

FIG. B9999-501001 Fan Sub Assembly and Air Cleaner (Fan)

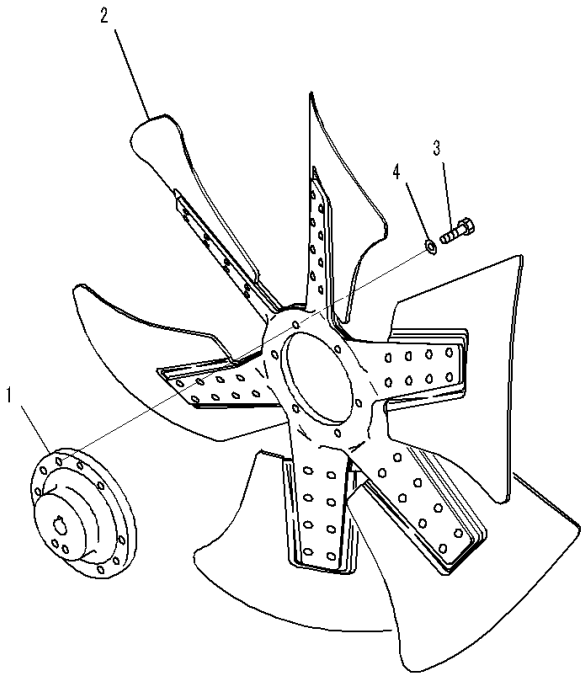

00055907

Index	Code	Part Number	Description	Qty	Serial Number
		600-645-6850	Fan, Sub Ass'y	1	567555-
1		600-645-6110	• Boss	1	567555-
2		600-645-7850	• Fan	1	567555-
3		01010-81030	• Bolt	6	567555-
4		01643-31032	• Washer	6	567555-

FIG. B9999-501002 Fan Sub Assembly and Air Cleaner (Air Cleaner Assembly)

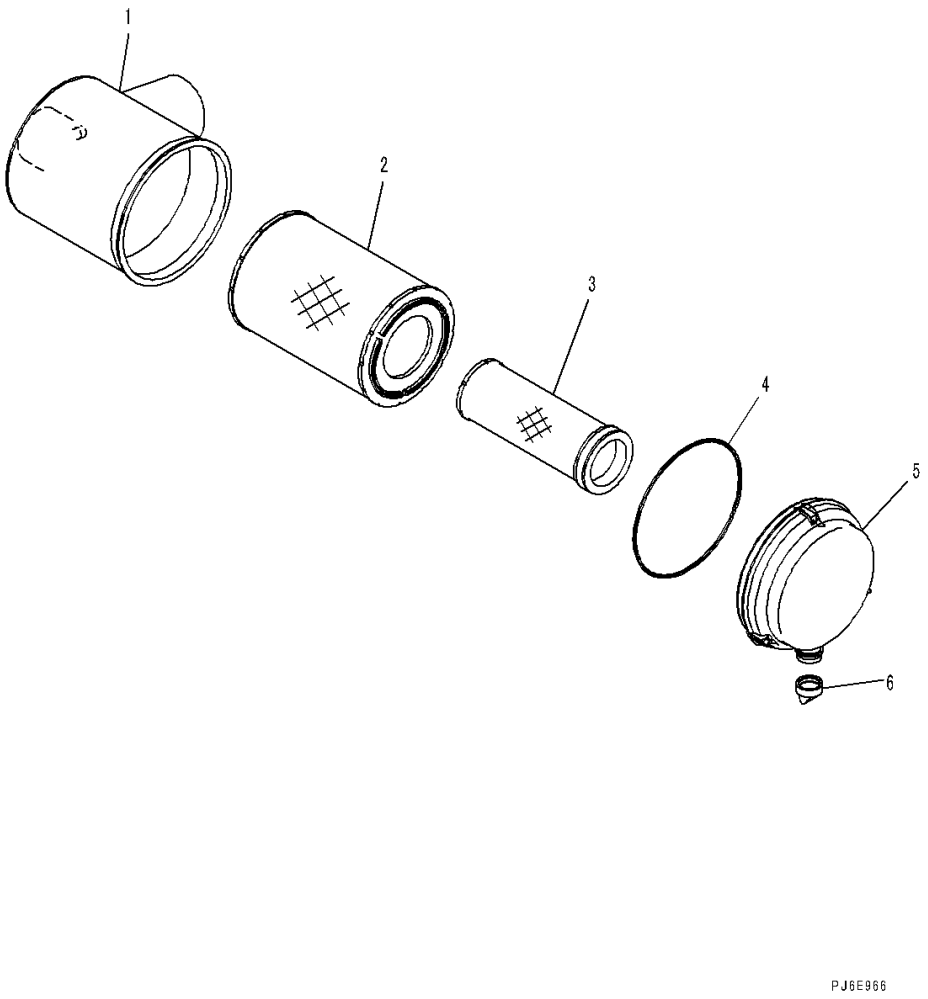

Index	Code	Part Number	Description	Qty	Serial Number
		6156-81-7101	Air Cleaner Assembly	1	567555-
1	C1		• Body	1	567555-
		600-185-5100	• Element Assembly	1	567555-
2		600-185-5110	• • Element, Outer	1	567555-
3	C1		• • Element, Inner	1	567555-
4		600-184-1570	• • O-ring	1	567555-
5		600-184-1510	• Cover Assembly	1	567555-
6		600-184-1350	• Valve, Vaquator	1	567555-

ENGINE LUBRICATION SYSTEM

FIG. A3110-001001 Engine Oil Filter and Piping

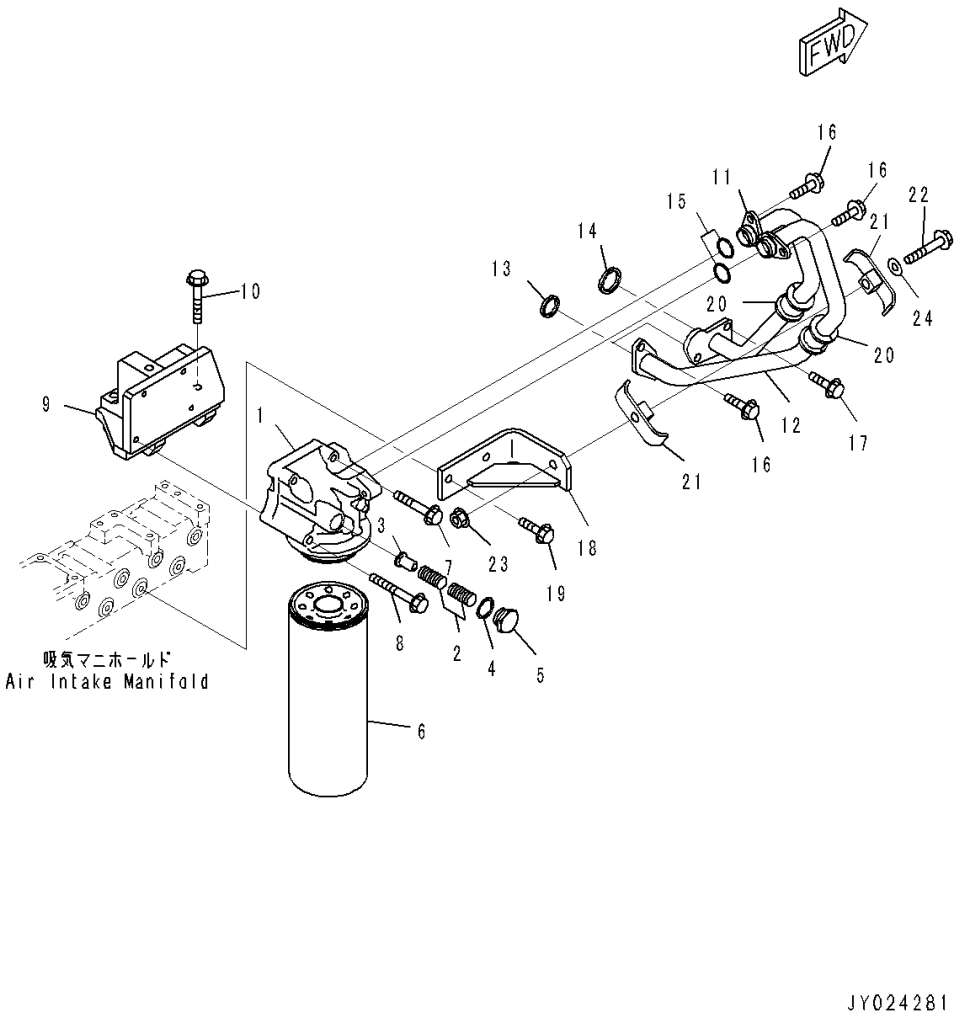

Index	Code	Part Number	Description	Qty	Serial Number
		6217-51-5103	Head Assembly, Oil Filter	1	567555-
1		6217-51-5112	• Head	1	567555-
2		600-211-1890	• Spring	1	567555-
3		6162-55-5230	• Valve	1	567555-
4		6162-53-5430	• Packing	1	567555-
5		6217-51-5660	• Cap	1	567555-
6		600-211-1340	Cartridge	1	567555-
7		01435-01060	Bolt	2	567555-
8		01436-01010	Bolt	2	567555-
9		6251-51-5340	Bracket	1	567555-
10		01435-01060	Bolt	1	567555-
11		6251-51-5771	Tube, Inlet	1	567555-
12		6251-51-5781	Tube, Return	1	567555-
13		6124-61-2181	Grommet	2	567555-
14		6154-51-5810	Grommet	1	567555-
15		07000-73025	O-ring	2	567555-
16		01435-01025	Bolt	4	567555-
17		01435-01025	Bolt	3	567555-
18		6251-51-5291	Bracket	1	567555-
19		01435-01025	Bolt	2	567555-
20		6251-51-5180	Cushion	2	567555-
21		07094-30518	Clamp	2	567555-
22		01435-01270	Bolt	1	567555-
23		01584-01210	Nut	1	567555-
24		01643-31232	Washer	1	567555-

FIG. A4110-002001 Fuel Filter and Piping

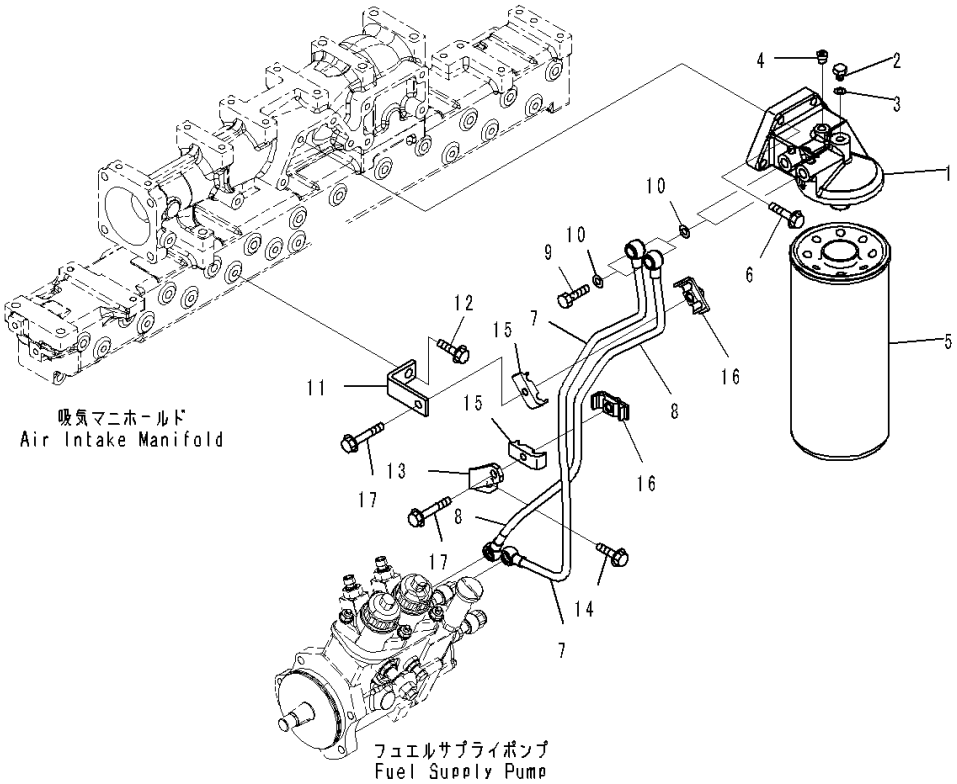

Index	Code	Part Number	Description	Qty	Serial Number
		6251-71-6300	Head Assembly, (1-3/8), Fuel Filter	1	568996-
1		6251-71-6310	• Head	1	568996-
2		6110-73-6231	• Plug	1	568996-
3		07005-00812	• Seal, Washer	1	568996-
4		07043-70108	• Plug	1	568996-
5	C1		Cartridge	1	568996-
6		01435-01035	Bolt	4	568996-
7		6251-71-5520	Tube, Inlet	1	568996-
8		6251-71-5540	Tube, Return	1	568996-
9		07206-31014	Bolt, Joint	2	568996-
10		07005-01412	Seal, Washer	4	568996-
11		6251-71-6230	Bracket	1	568996-
12		01435-01020	Bolt	1	568996-
13		6251-71-6210	Bracket	1	568996-
14		01435-01020	Bolt	1	568996-
15		6166-75-6821	Clamp, half	2	568996-
16		6261-51-9481	Clamp, half	2	568996-
17		01435-00840	Bolt	2	568996-

FIG. A4110-003001 Fuel Filter and Piping (For Bad Fuel and Poor Fuel Specification, Water+Dust, Turkey)

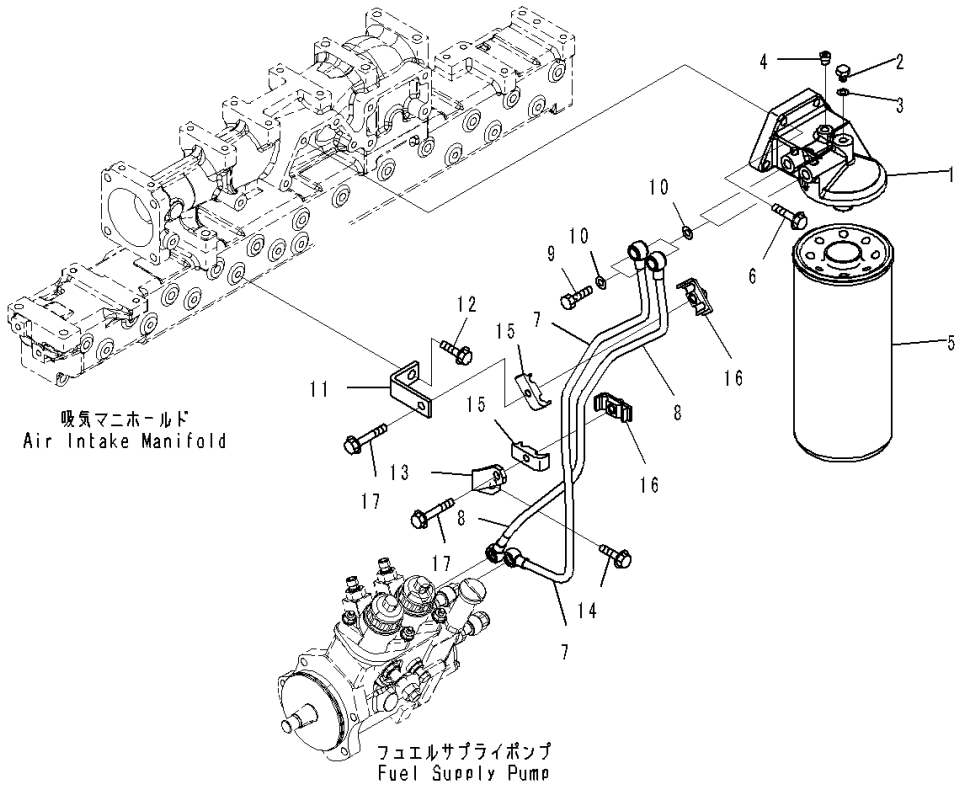

Index	Code	Part Number	Description	Qty	Serial Number
		6251-71-6300	Head Assembly, (1-3/8), Fuel Filter	1	567555-
1		6251-71-6310	• Head	1	567555-
2		6110-73-6231	• Plug	1	567555-
3		07005-00812	• Seal, Washer	1	567555-
4		07043-70108	• Plug	1	567555-
5	C1		Cartridge	1	567555-
6		01435-01035	Bolt	4	567555-
7		6251-71-5520	Tube, Inlet	1	567555-
8		6251-71-5540	Tube, Return	1	567555-
9		07206-31014	Bolt, Joint	2	567555-
10		07005-01412	Seal, Washer	4	567555-
11		6251-71-6230	Bracket	1	567555-
12		01435-01020	Bolt	1	567555-
13		6251-71-6210	Bracket	1	567555-
14		01435-01020	Bolt	1	567555-
15		6166-75-6821	Clamp, half	2	567555-
16		6261-51-9481	Clamp, half	2	567555-
17		01435-00840	Bolt	2	567555-

FIG. A3010-001001 Engine Oil Pump

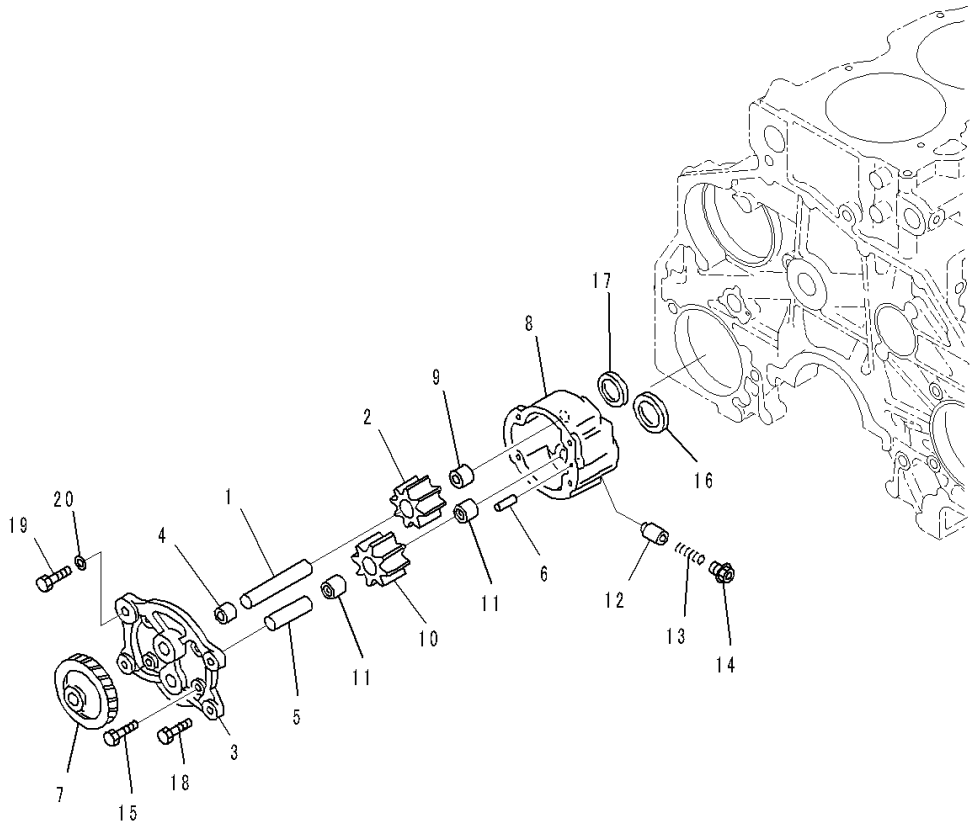

Index	Code	Part Number	Description	Qty	Serial Number
		6251-51-1001	Pump Assembly, Oil	1	567555-
	C1		• Shaft Assembly	1	567555-
1	C1		• • Shaft	1	567555-
2	C1		• • Gear	1	567555-
	C1		• Cover Assembly	1	567555-
	C1		• • Cover Assembly	1	567555-
3	C1		• • • Cover	1	567555-
4	C1		• • • Bushing	1	567555-
5	C1		• • Shaft	1	567555-
6	C1		• • Pin	1	567555-
7	C1		• • Gear	1	567555-
	C1		• Case Assembly	1	567555-
8	C1		• • Case	1	567555-
9	C1		• • Bushing	1	567555-
	C1		• Gear Assembly	1	567555-
10	C1		• • Gear	1	567555-
11	C1		• • Bushing	2	567555-
12		PML136-02800	• Valve	1	567555-
13		PML137-06010	• Spring	1	567555-
14		PML139-01300	• Plug	1	567555-
15	C1		• Bolt	4	567555-
16		6150-51-1710	Ring	1	567555-
17		6150-51-1720	Ring	1	567555-
18		01010-81025	Bolt	3	567555-
19		01010-81035	Bolt	1	567555-
20		01643-31032	Washer	1	567555-

FIG. A3310-001001 Engine Oil Cooler

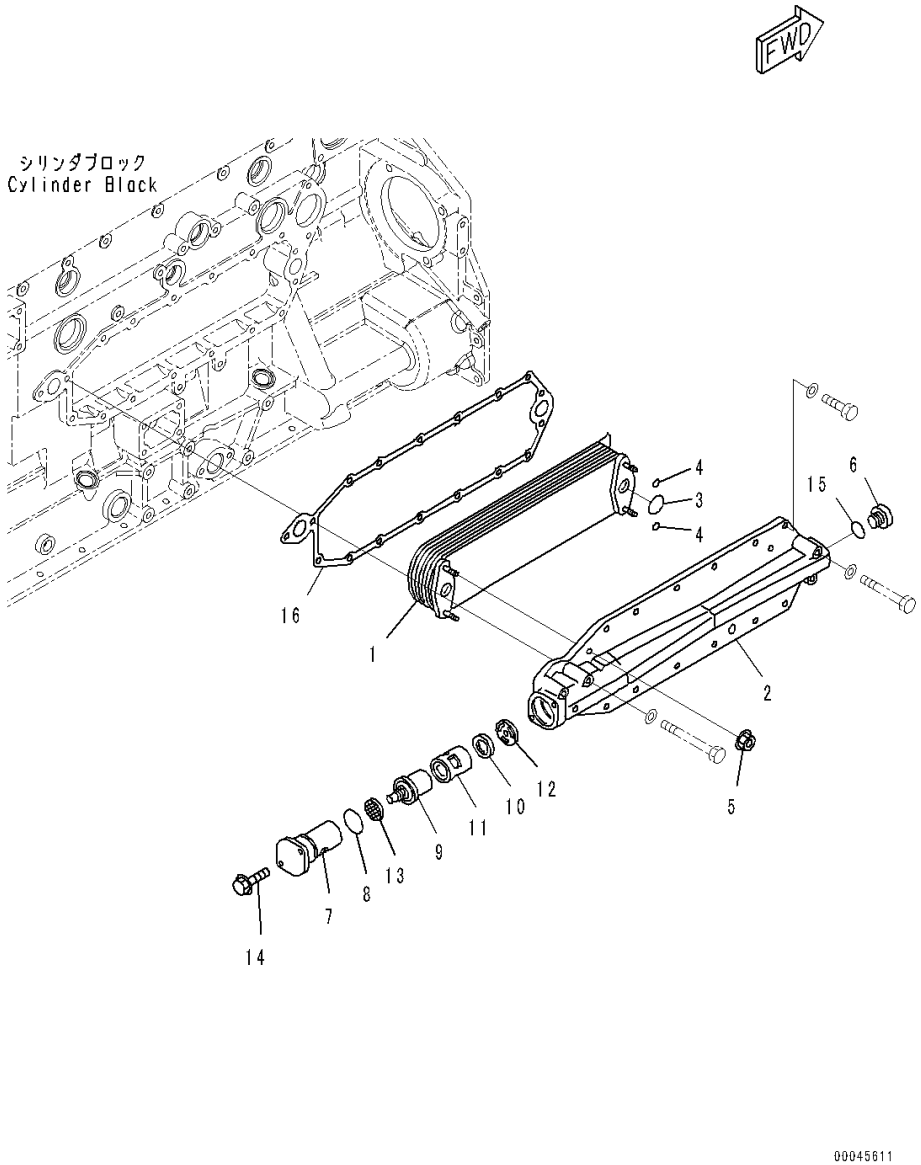

Index	Code	Part Number	Description	Qty	Serial Number
1		6152-62-2210	Element, Oil Cooler	1	567555-
2		6150-61-2125	Cover, Oil Cooler	1	567555-
3		6150-61-2510	O-ring	2	567555-
4		6150-61-2520	O-ring	4	567555-
5		6150-61-2580	Nut	4	567555-
6		6150-61-2530	Plug	1	567555-
7		6151-62-2130	Cover	1	567555-
8		07000-63042	O-ring	1	567555-
9		6251-61-2610	Thermostat	1	567555-
10		6150-61-2540	Seal	1	567555-
11		6150-61-2141	Case	1	567555-
12		6150-61-2151	Plate	1	567555-
13		6151-62-2180	Strainer	1	567555-
14		01435-00825	Bolt	2	567555-
15		6150-61-2550	O-ring	1	567555-
16		6150-61-2815	Gasket	1	567555-

FIG. A3311-002001 Engine Oil Cooler Related Parts

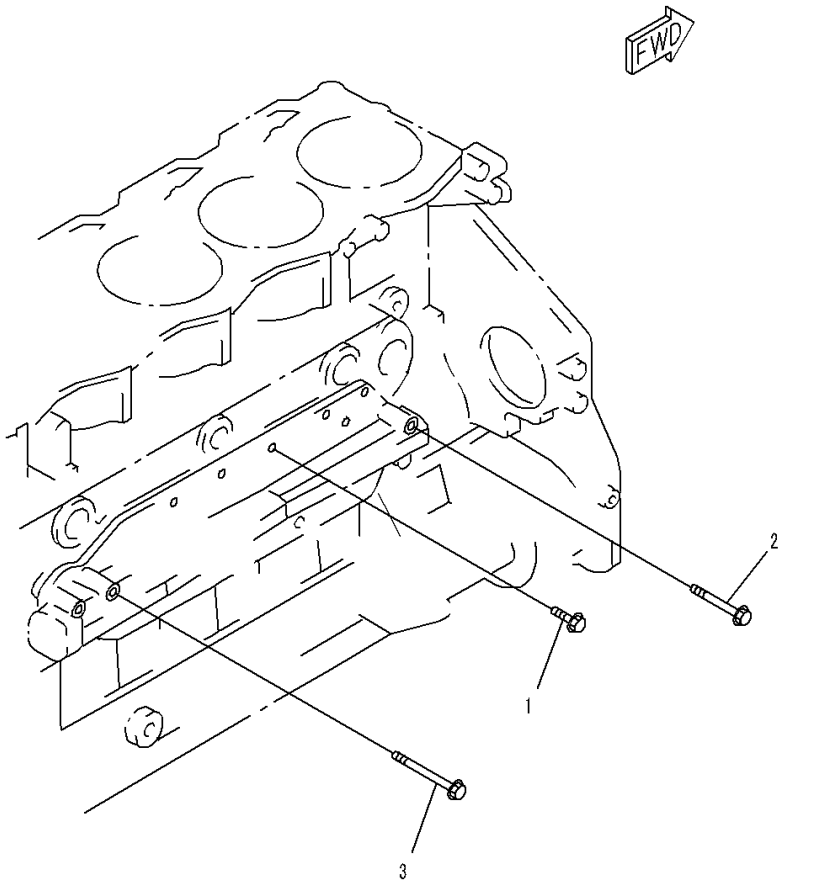

Index	Code	Part Number	Description	Qty	Serial Number
1		01435-01025	Bolt	11	572864-
2		01435-01065	Bolt	2	572864-
3		01435-01080	Bolt	2	572864-

ENGINE FUEL SYSTEM

FIG. A4150-001001 Fuel Prefilter (Fuel Prefilter (1-1/4))

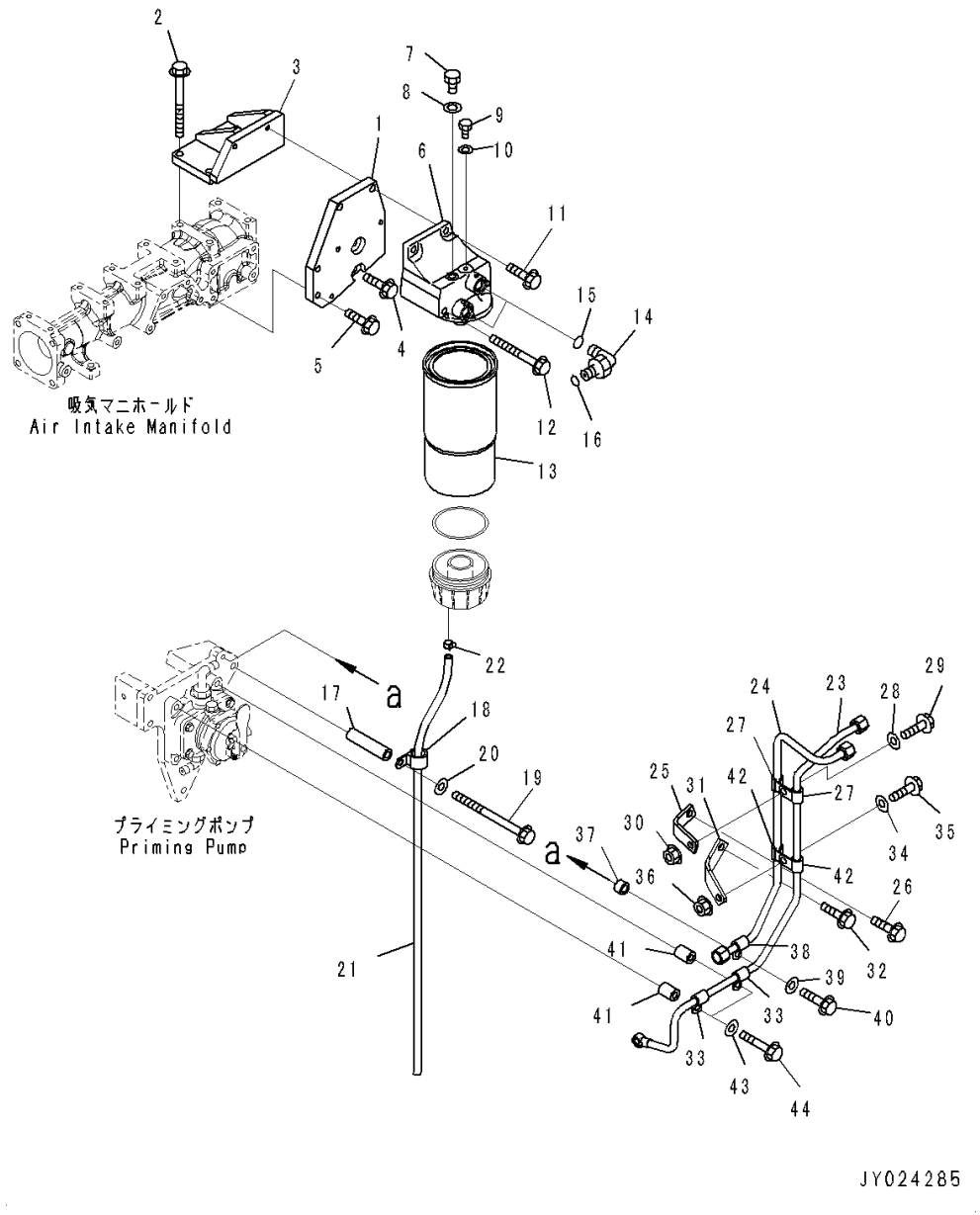

Index	Code	Part Number	Description	Qty	Serial Number
1		6251-71-6730	Bracket	1	567555-
2		01436-01060	Bolt	3	567555-
3		6251-71-6761	Bracket	1	567555-
4		01435-01025	Bolt	2	567555-
5		01435-01035	Bolt	2	567555-
		6251-71-7100	Head Assembly	1	567555-
6		6251-71-7110	• Head, Pre-filter	1	567555-
7		07040-11209	• Plug	1	567555-
8		07005-01212	• Seal, Washer	1	567555-
9		6110-73-6231	• Plug	1	567555-
10		07005-00812	• Seal, Washer	1	567555-
11		01435-01050	Bolt	2	567555-
12		01436-01010	Bolt	2	567555-
		600-311-4500	Filter Assembly, (1-1/4)	1	567555-
13	C1		• Cartridge, (1-1/4)	1	567555-
14		02782-10422	Elbow	2	567555-
15		07002-12034	O-ring	2	567555-
16		02896-11012	O-ring	2	567555-
17		6215-71-6190	Spacer	1	567555-
18		600-051-2240	Clip	1	567555-
19		01436-01085	Bolt	1	567555-
20		01643-31032	Washer	1	567555-
21		07286-00895	Hose	1	567555-
22		07285-00125	Clip	1	567555-
23		6251-71-6710	Tube, Inlet	1	567555-
24		6251-71-6720	Tube	1	567555-
25		6251-71-6750	Bracket	1	567555-
26		01435-01020	Bolt	1	567555-
27		600-051-6120	Clip	2	567555-
28		01643-31032	Washer	1	567555-
29		01435-01025	Bolt	1	567555-
30		01584-01008	Nut	1	567555-
31		6251-71-6770	Bracket	1	567555-
32		01435-01020	Bolt	1	567555-
33		600-051-6120	Clip	2	567555-
34		01643-31032	Washer	1	567555-
35		01435-01025	Bolt	1	567555-
36		01584-01008	Nut	1	567555-
37		6151-51-8490	Spacer	1	567555-
38		600-051-6120	Clip	1	567555-

FIG. A4150-001001 Fuel Prefilter (Fuel Prefilter (1-1/4))

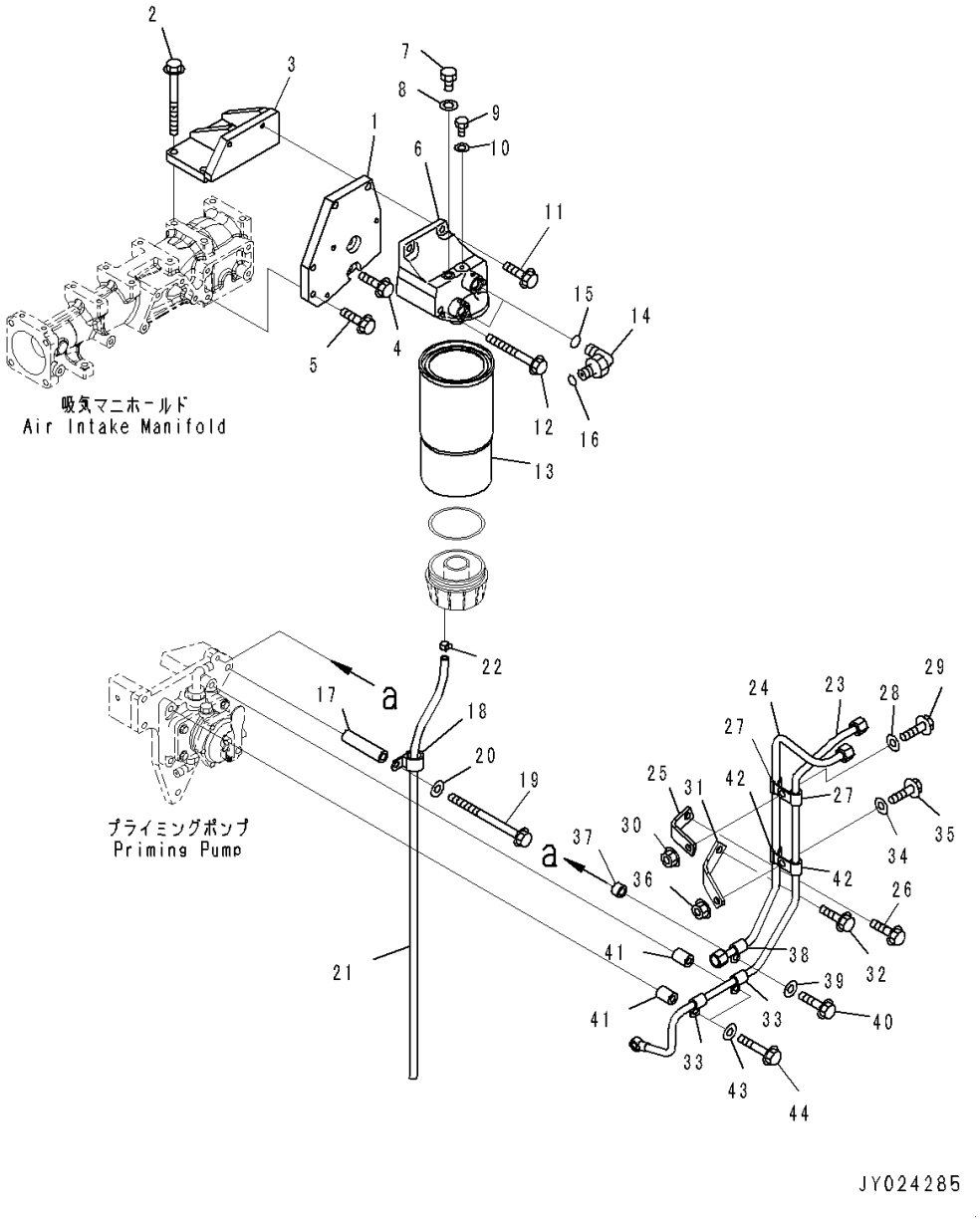

Index	Code	Part Number	Description	Qty	Serial Number
39		01643-31032	Washer	1	567555-
40		01435-01030	Bolt	1	567555-
41		6167-21-5910	Spacer	2	567555-
42		600-051-6120	Clip	2	567555-
43		01643-31032	Washer	2	567555-
44		01435-01065	Bolt	2	567555-

FIG. A4150-001002 Fuel Prefilter (Priming Pump and Piping)

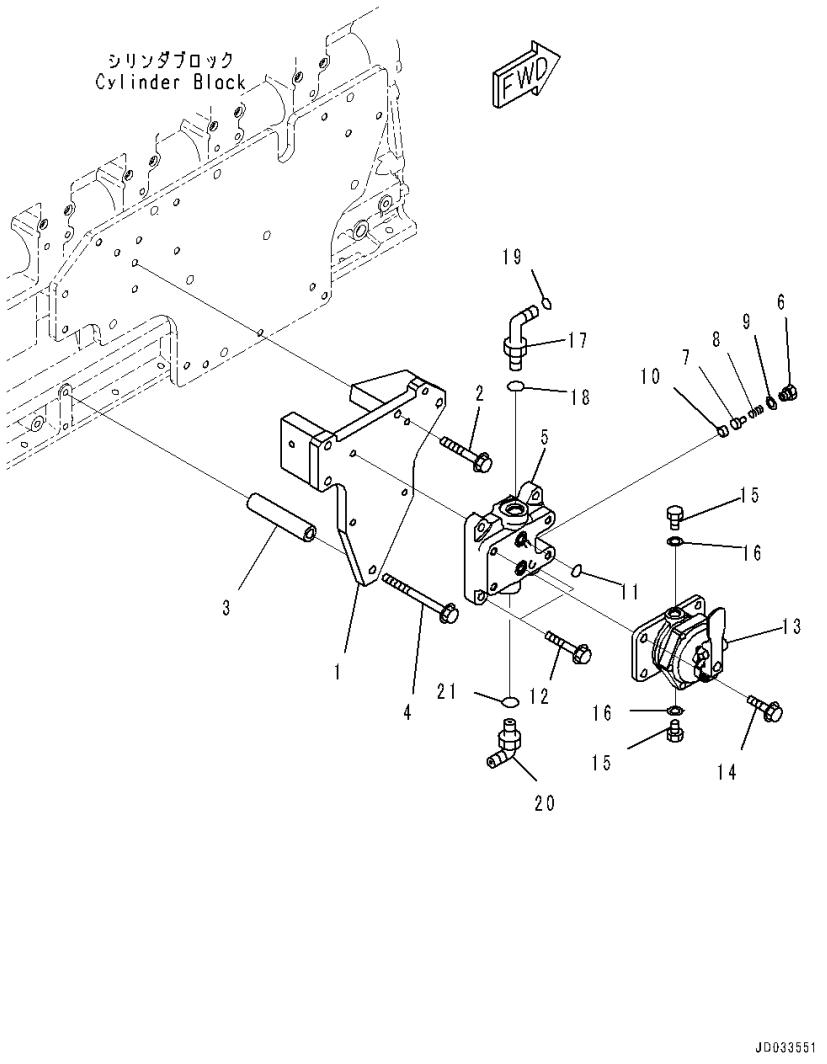

Index	Code	Part Number	Description	Qty	Serial Number
1		6251-71-6740	Bracket	1	567555-
2		01435-01090	Bolt	3	567555-
3		6251-71-6780	Spacer	1	567555-
4		01436-01035	Bolt	1	567555-
		6261-71-8100	Block Assembly	1	567555-
5		6261-71-8110	• Block	1	567555-
6		6217-71-6850	• Plug	1	567555-
7		6217-71-6820	• Valve	1	567555-
8		6217-71-6830	• Spring	1	567555-
9		6217-71-6840	• Washer	1	567555-
10		6217-71-6870	• Pin	1	567555-
11		07000-12014	O-ring	2	567555-
12		01435-01035	Bolt	2	567555-
13		6261-71-8240	Pump Assembly, Priming	1	567555-
14		01435-01025	Bolt	4	567555-
15		6110-53-5910	Plug	2	567555-
16		07005-01412	Seal, Washer	2	567555-
17		02782-10423	Elbow	1	567555-
18		07002-12034	O-ring	1	567555-
19		02896-11012	O-ring	1	567555-
20		02782-10422	Elbow	1	567555-
21		07002-12034	O-ring	1	567555-

FIG. A4159-001001 Fuel Prefilter (Service Only)

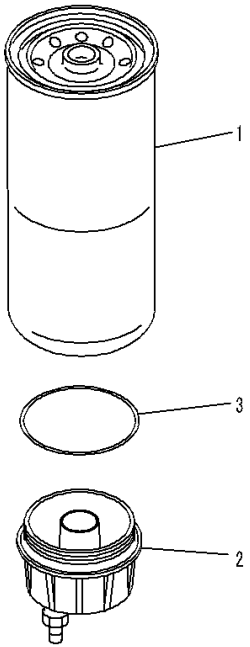

JD033552

Index	Code	Part Number	Description	Qty	Serial Number
		600-319-4500	Cartridge Assembly	1	567555-
		600-311-4500	• Filter Assembly, (1-1/4)	1	567555-
1		600-311-4510	• • Cartridge, (1-1/4)	1	567555-
2		600-311-3220	• • Cap	1	567555-
3		600-311-3230	• • Seal	1	567555-
		600-311-4510	Cartridge, (1-1/4), Not Shown	1	567555-
		600-311-3230	Seal, Not Shown	1	567555-

FIG. A4010-001001 Fuel Supply Pump (Inner Parts, Pump)

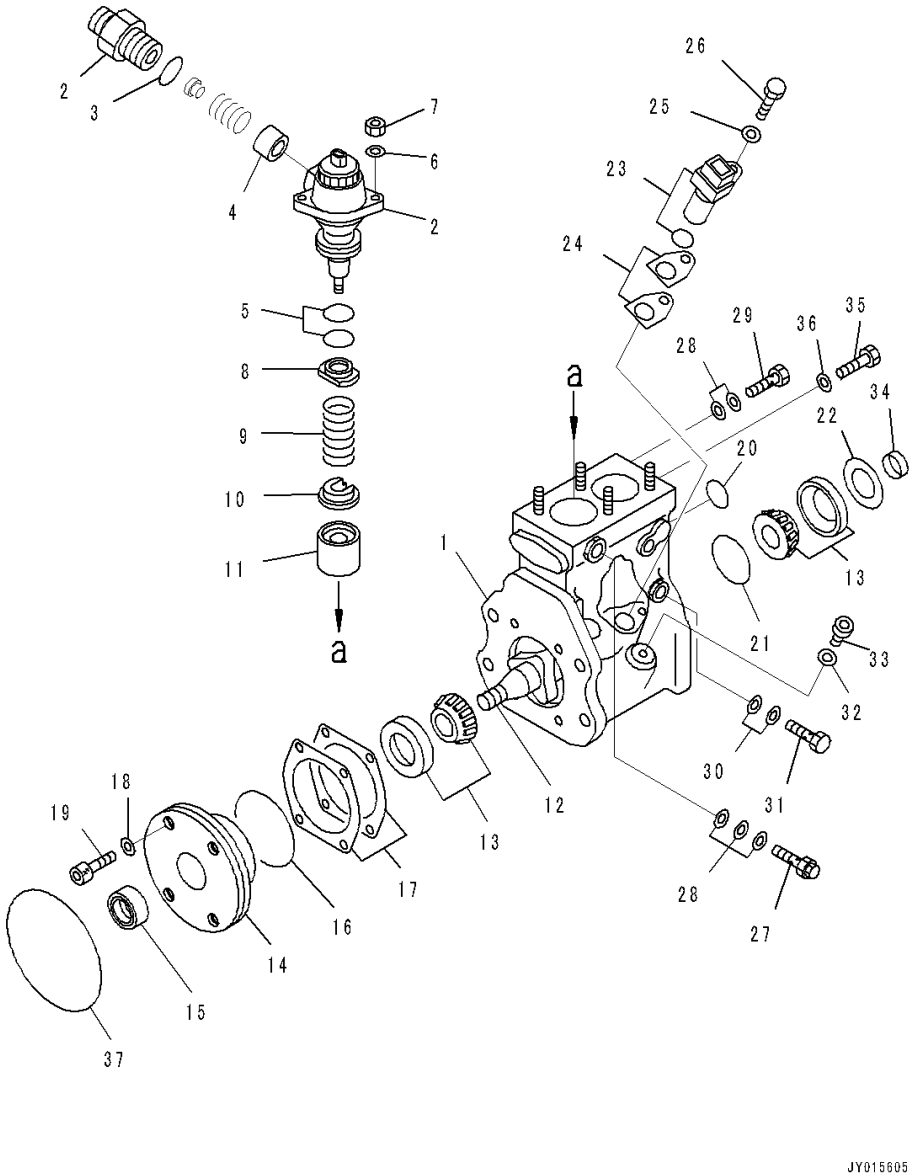

Index	Code	Part Number	Description	Qty	Serial Number
		6251-71-1121	Pump Assembly, Fuel Injection	1	567555-
	C2	ND094100-0460	• Body Assembly	1	567555-
1	C2	ND094110-0210	• • Housing Assembly	1	567555-
2	C2	ND094040-0370	• • Element Assembly	2	567555-
3	C2	ND094086-0090	• • • O-ring	2	567555-
4	C2	ND094140-0040	• • • Valve Assembly	2	567555-
5	C2	ND094086-0100	• • O-ring	4	567555-
6	C2	ND949013-5880	• • Washer	4	567555-
7	C2	ND92156-08081	• • Nut	4	567555-
8	C2	ND094162-0040	• • Seat	2	567555-
9	C2	ND094164-0010	• • Spring	2	567555-
10	C2	ND094165-0021	• • Seat	2	567555-
11	C2	ND094170-0100	• • Tappet Assembly	2	567555-
12	C2	ND094191-0161	• • Camshaft	1	567555-
13	C2	ND949101-0230	• • Bearing, Roller	2	567555-
14	C2	ND094104-0100	• • Cover	1	567555-
15	C2	ND949150-3030	• • Seal, Oil	1	567555-
16	C2	ND094086-0120	• • O-ring	1	567555-
17	C2	ND094095-0100	• • Shim, T=0.05mm	AR	567555-
	C2	ND094095-0130	• • Shim, T=0.10mm	AR	567555-
	C2	ND094095-0140	• • Shim, T=0.20mm	AR	567555-
	C2	ND094095-0150	• • Shim, T=0.30mm	AR	567555-
	C2	ND094095-0160	• • Shim, T=0.50mm	AR	567555-
18	C2	ND094092-0010	• • Washer	4	567555-
19	C2	ND949044-3320	• • Bolt	4	567555-
20	C2	ND094086-0110	• • O-ring	1	567555-
21	C2	ND094086-0130	• • O-ring	1	567555-
22	C2	ND094093-0050	• • Shim, T=0.40mm	AR	567555-
	C2	ND094093-0060	• • Shim, T=0.60mm	AR	567555-
	C2	ND094093-0070	• • Shim, T=0.80mm	AR	567555-
	C2	ND094093-0080	• • Shim, T=1.00mm	AR	567555-
23	C2	ND949979-1300	• • Sensor Assembly	1	567555-
	C2	ND949140-6310	• • • O-ring	1	567555-
24	C2	ND094096-0050	• • Shim, T=0.15mm	AR	567555-
	C2	ND094096-0060	• • Shim, T=0.20mm	AR	567555-
	C2	ND094096-0070	• • Shim, T=0.25mm	AR	567555-
	C2	ND094096-0080	• • Shim, T=0.40mm	AR	567555-
25	C2	ND90200-06081	• • Washer	1	567555-
26	C2	ND90107-06161	• • Bolt	1	567555-
27		ND090310-0500	• • Valve Assembly	1	567555-

FIG. A4010-001001 Fuel Supply Pump (Inner Parts, Pump)

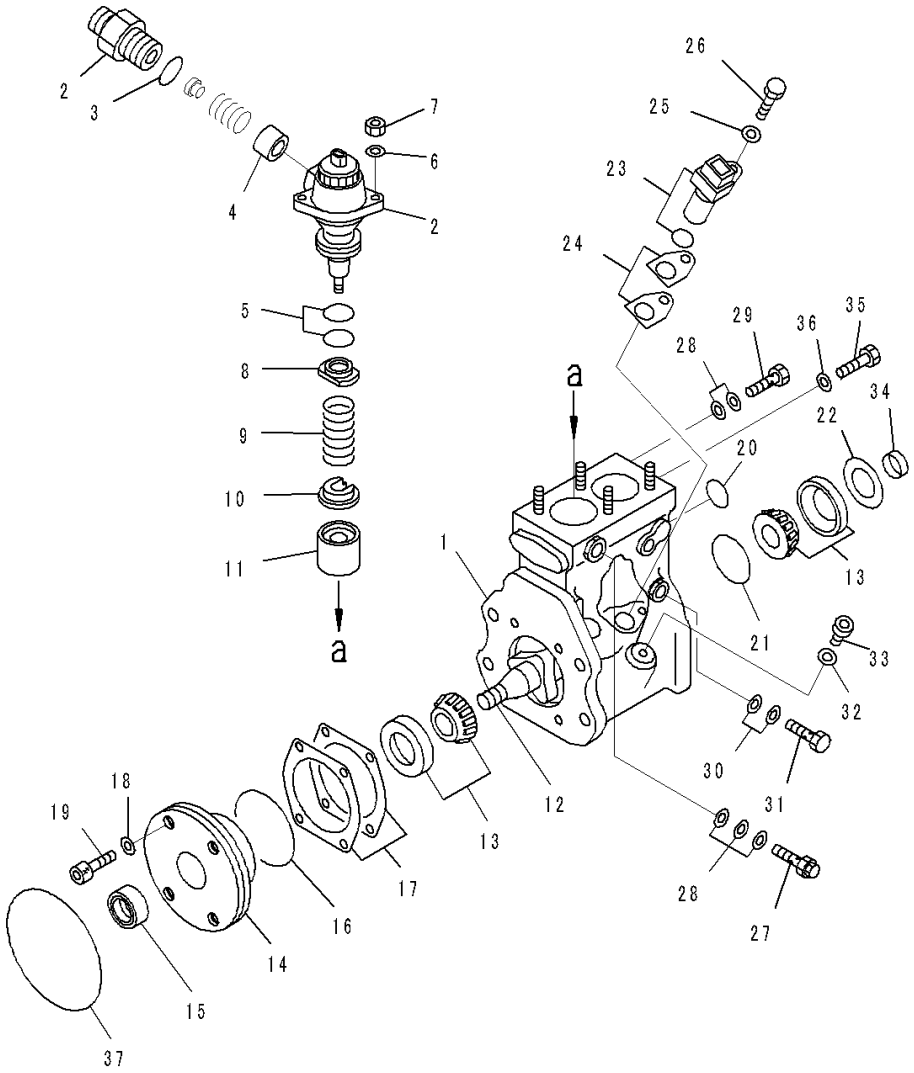

Index	Code	Part Number	Description	Qty	Serial Number
28		ND090222-0070	• • Washer	5	567555-
29		ND949180-0310	• • Screw	1	567555-
30		ND090222-0120	• • Washer	2	567555-
31		ND949180-0060	• • Screw	1	567555-
32	C2	ND949018-0350	• • Washer	1	567555-
33	C2	ND090317-0480	• • Plug	1	567555-
34	C2	ND090207-0100	• • Ring	1	567555-
35		ND090244-0010	• • Screw	1	567555-
36		ND949010-3020	• • Washer	1	567555-
37		ND094086-0210	• O-ring	1	567555-

FIG. A4010-001002 Fuel Supply Pump (Inner Parts, Feed Pump)

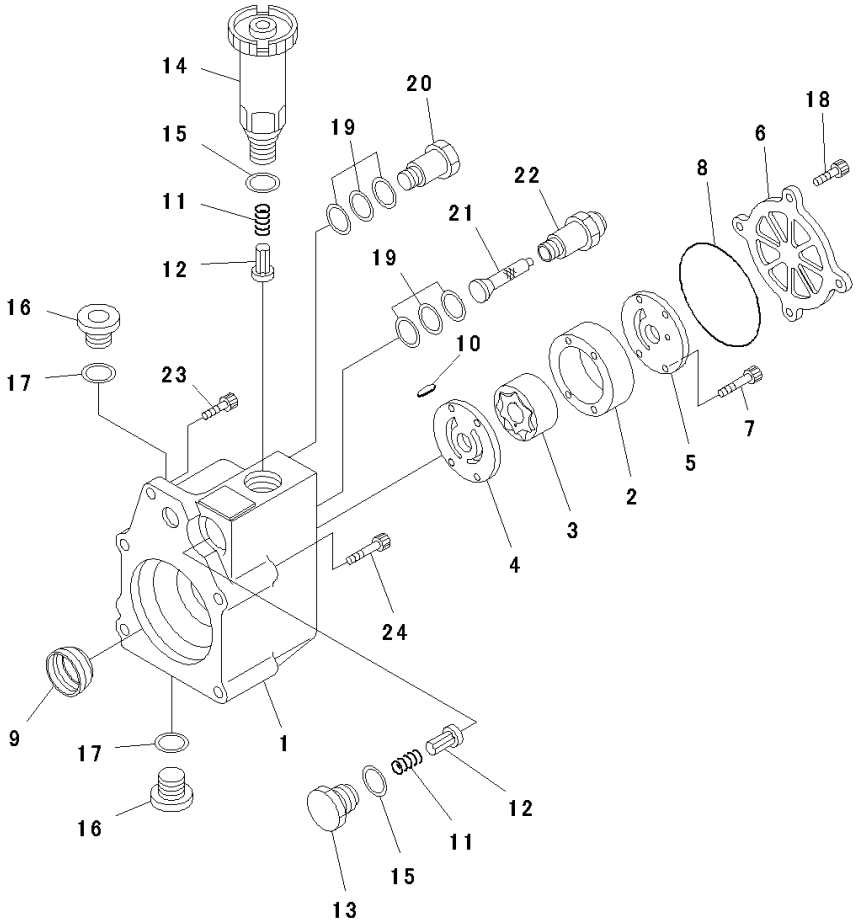

Index	Code	Part Number	Description	Qty	Serial Number
		6251-71-1121	Pump Assembly, Fuel Injection	1	567555-
		6251-71-1121	• Pump Assembly, Fuel Injection	1	567555-
	C2	ND094200-0390	• • Pump Assembly, Feed	1	567555-
1	C2	ND094210-0070	• • • Housing Assembly	1	567555-
2	C2	ND094231-0060	• • • Case	1	567555-
3	C2	ND094230-0080	• • • Pump Subassembly	1	567555-
4	C2	ND094241-0040	• • • Plate	1	567555-
5	C2	ND094244-0040	• • • Plate	1	567555-
6	C2	ND094251-0050	• • • Cover	1	567555-
7	C2	ND094082-0040	• • • Screw	4	567555-
8	C2	ND094086-0200	• • • O-ring	1	567555-
9	C2	ND094087-0050	• • • Seal, Oil	1	567555-
10	C2	ND094205-0060	• • • Key	1	567555-
11		ND092124-0010	• • • Spring, Check Valve	2	567555-
12		ND092121-0011	• • • Valve, Check	2	567555-
13	C2	ND092126-0010	• • • Plug, Chamber	1	567555-
14		ND092130-0360	• • • Pump, Fuel Priming	1	567555-
15		ND092125-0010	• • • Gasket	2	567555-
16	C2	ND090317-0060	• • • Plug, Screw	2	567555-
17	C2	ND949018-1500	• • • Washer, T=1.0mm	2	567555-
18	C2	ND949044-3320	• • • Bolt	4	567555-
19		ND090222-0070	• • • Washer	6	567555-
20		ND090310-0490	• • • Valve, Overflow	1	567555-
21		ND092220-0040	• • • Filter	1	567555-
22		ND092223-0042	• • • Screw	1	567555-
23	C2	ND949044-3320	• • Bolt	1	567555-
24		ND096449-0070	• • Bolt, Socet	4	567555-

FIG. A4010-001003 Fuel Supply Pump (Pump Mounting)

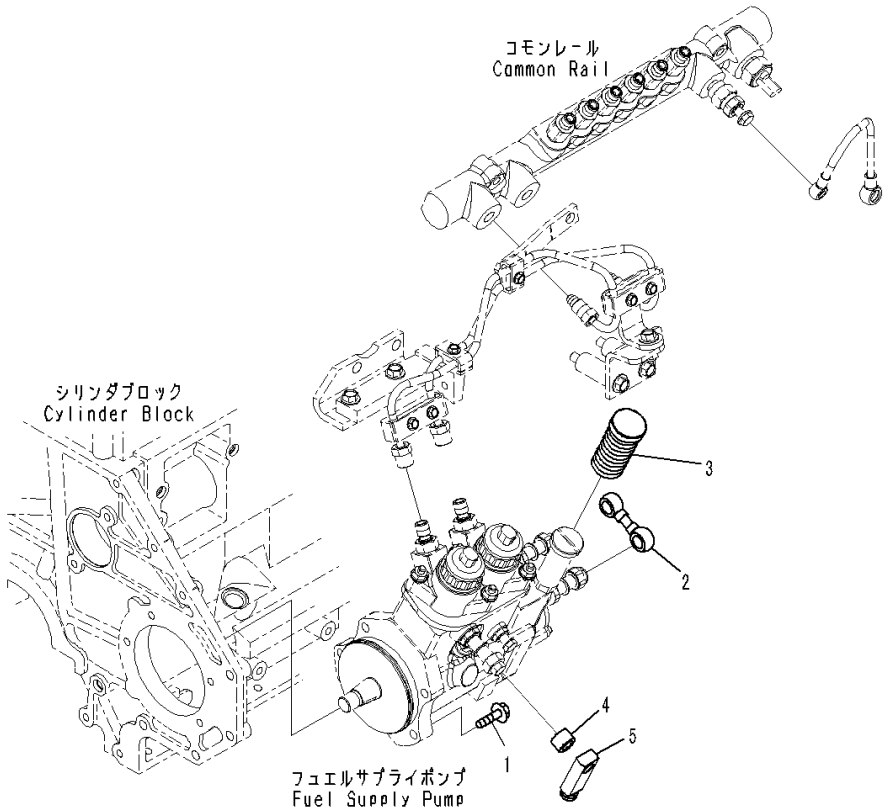

Index	Code	Part Number	Description	Qty	Serial Number
1		01435-01035	Bolt	4	567555-
2		6217-71-5910	Tube, Cross	1	567555-
3		6217-71-1910	Cover	1	567555-
4		6151-51-8490	Spacer	1	567555-
5		6156-71-5370	Joint	1	567555-

FIG. A4010-001004 Fuel Supply Pump (Inner Parts, Common Rail)

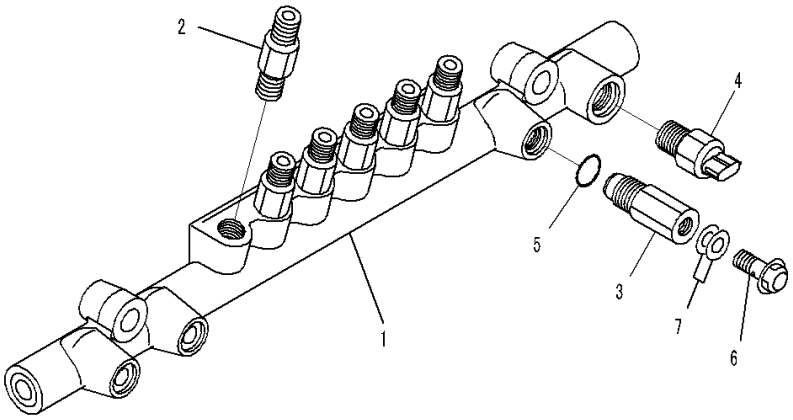

Index	Code	Part Number	Description	Qty	Serial Number
1		6261-71-1220	Common Rail Assembly	1	567555-
2		ND095400-0310	• Limiter Assembly, Fuel Flow	6	567555-
3		ND095420-0440	• Limiter Assembly, Fuel Pressure	1	567555-
4		ND499000-6160	• Sensor Assembly, Fuel Pressure	1	567555-
5		ND095444-0020	• Ring	1	567555-
6		ND095438-0090	• Bolt, Joint	1	567555-
7		ND949010-2530	• Gasket	2	567555-

FIG. A4010-001005 Fuel Supply Pump (Mounting)

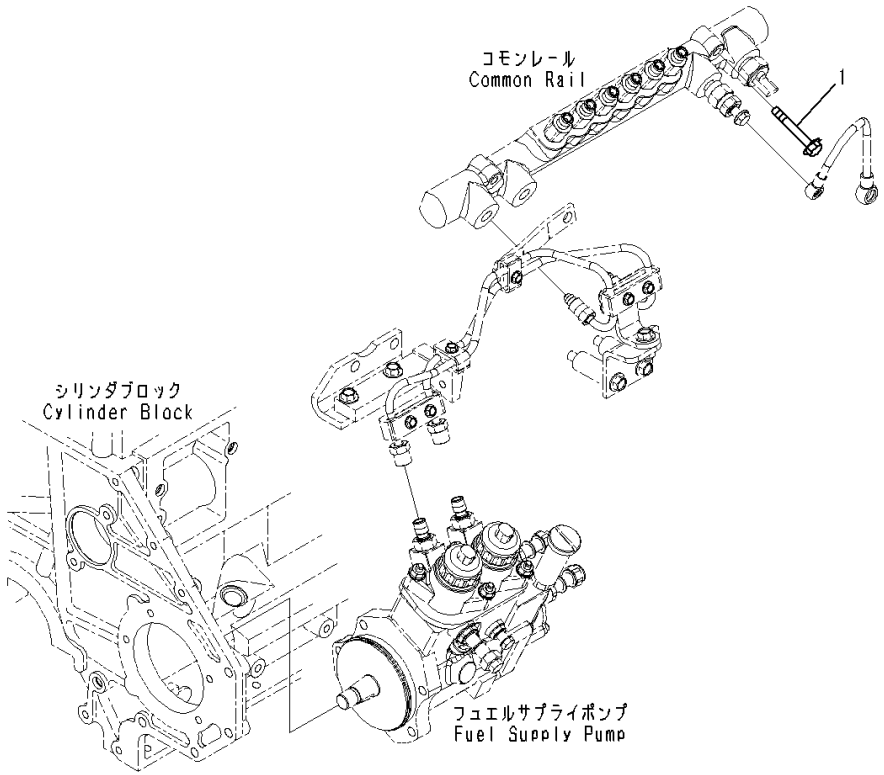

Index	Code	Part Number	Description	Qty	Serial Number
1		01435-01050	Bolt	2	567555-

FIG. A4010-001006 Fuel Supply Pump (Return Piping)

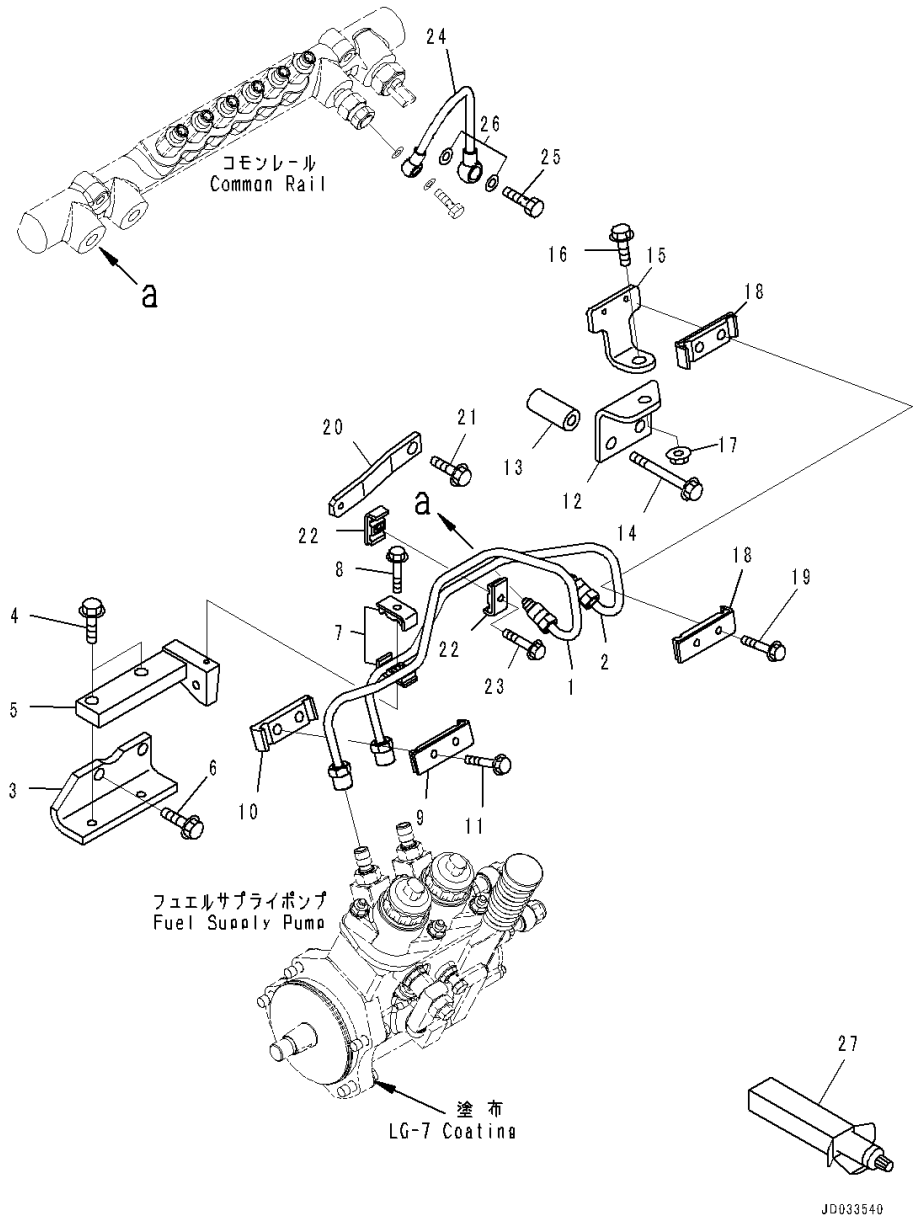

Index	Code	Part Number	Description	Qty	Serial Number
1		6251-71-4112	Tube, Supply	1	567555-
2		6251-71-4122	Tube, Supply	1	567555-
3		6156-71-5281	Bracket	1	567555-
4		01435-01025	Bolt	2	567555-
5		6251-71-5830	Bracket	1	567555-
6		01435-01025	Bolt	1	567555-
7		6162-75-5820	Clamp	2	567555-
8		01435-00630	Bolt	1	567555-
9		6217-71-5211	Clamp	1	567555-
10		6217-71-5171	Clamp	1	567555-
11		01435-00630	Bolt	2	567555-
12		6251-71-5820	Bracket	1	567555-
13		6152-51-5520	Spacer	2	567555-
14		01435-01070	Bolt	2	567555-
15		6217-71-5281	Bracket	1	567555-
16		01435-01025	Bolt	1	567555-
17		01584-01008	Nut	1	567555-
18		6217-71-5211	Clamp	2	567555-
19		01435-00630	Bolt	2	567555-
20		6251-71-5810	Bracket	1	567555-
21		01435-01045	Bolt	1	567555-
22		6162-75-5820	Clamp	2	567555-
23		01435-00630	Bolt	1	567555-
24		6251-71-5450	Tube, Return	1	567555-
25		07206-31014	Bolt, Joint	1	567555-
26		07005-01412	Seal, Washer	2	567555-
27		09920-00150	Liquid gasket, LG-7, 150G	AR	567555-

FIG. A4080-001001 Fuel Supply Pump Drive

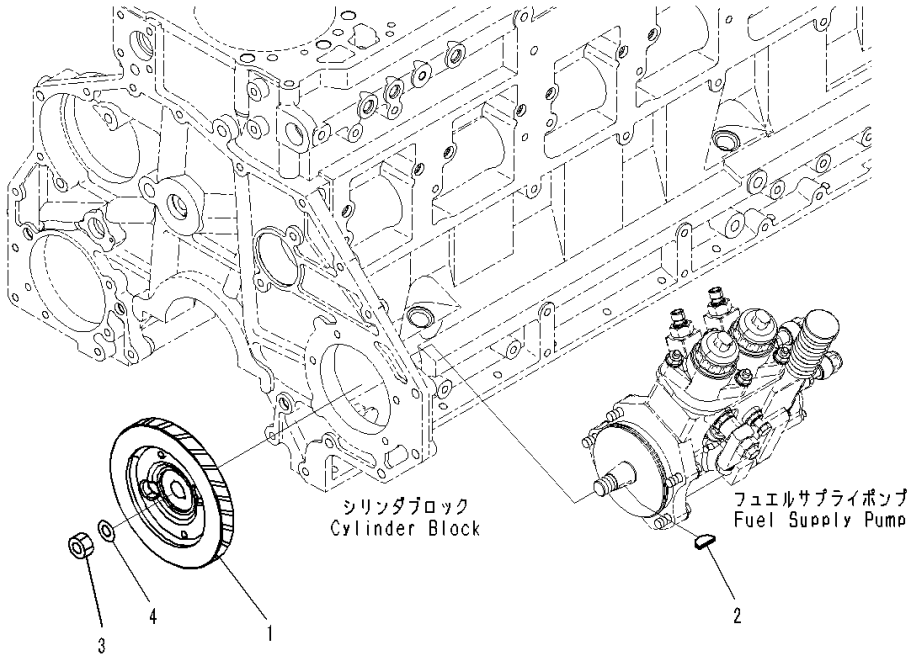

Index	Code	Part Number	Description	Qty	Serial Number
1		6251-71-3230	Gear, Pump Drive	1	567555-
2		04010-00519	Key, Woodruff	1	567555-
3		01583-01811	Nut	1	567555-
4		01643-31845	Washer	1	567555-

FIG. A4210-001001 Fuel Injector

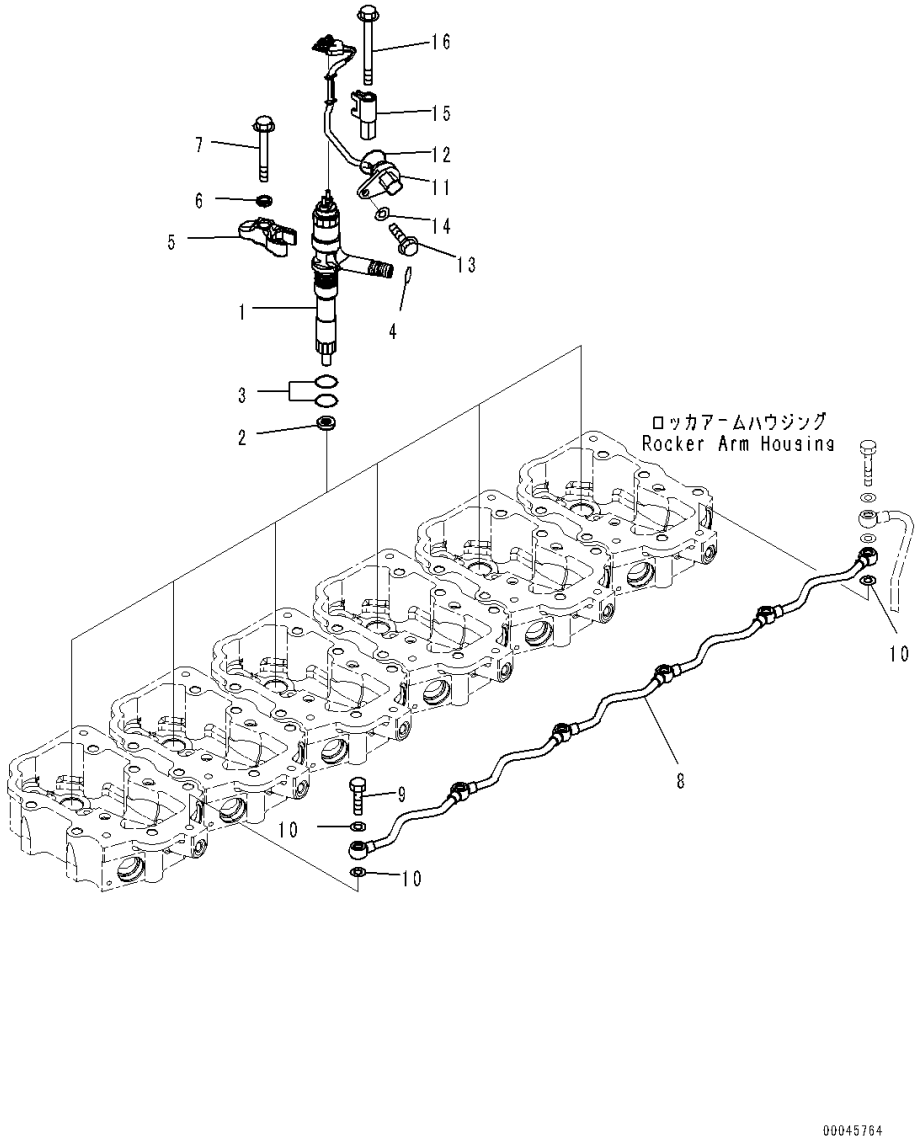

Index	Code	Part Number	Description	Qty	Serial Number
1		6251-11-3200	Injector Assembly	6	567555-
	C1		• Holder	1	567555-
	C1		• Nozzle	1	567555-
2		6217-71-6112	Gasket	6	567555-
3		6219-71-1150	O-ring	12	567555-
4		6219-71-1160	O-ring	6	567555-
5		6156-71-1161	Holder, Injector	6	567555-
6		6217-71-1140	Washer	6	567555-
7		01437-01075	Bolt	6	567555-
8		6251-71-5340	Tube, Spill	1	567555-
9		6934-72-7190	Bolt, Joint	5	567555-
10		07005-01012	Seal, Washer	11	567555-
11		6156-81-9110	Wiring Harness	6	567555-
12		07000-E3024	O-ring	6	567555-
13		6156-81-9130	Bolt	6	567555-
14		01640-20610	Washer	6	567555-
15		6156-81-9150	Holder	6	567555-
16		01435-00870	Bolt	6	567555-

FIG. A4030-001001 Fuel Injection Controller Related Parts (Fuel Piping) (1/2)

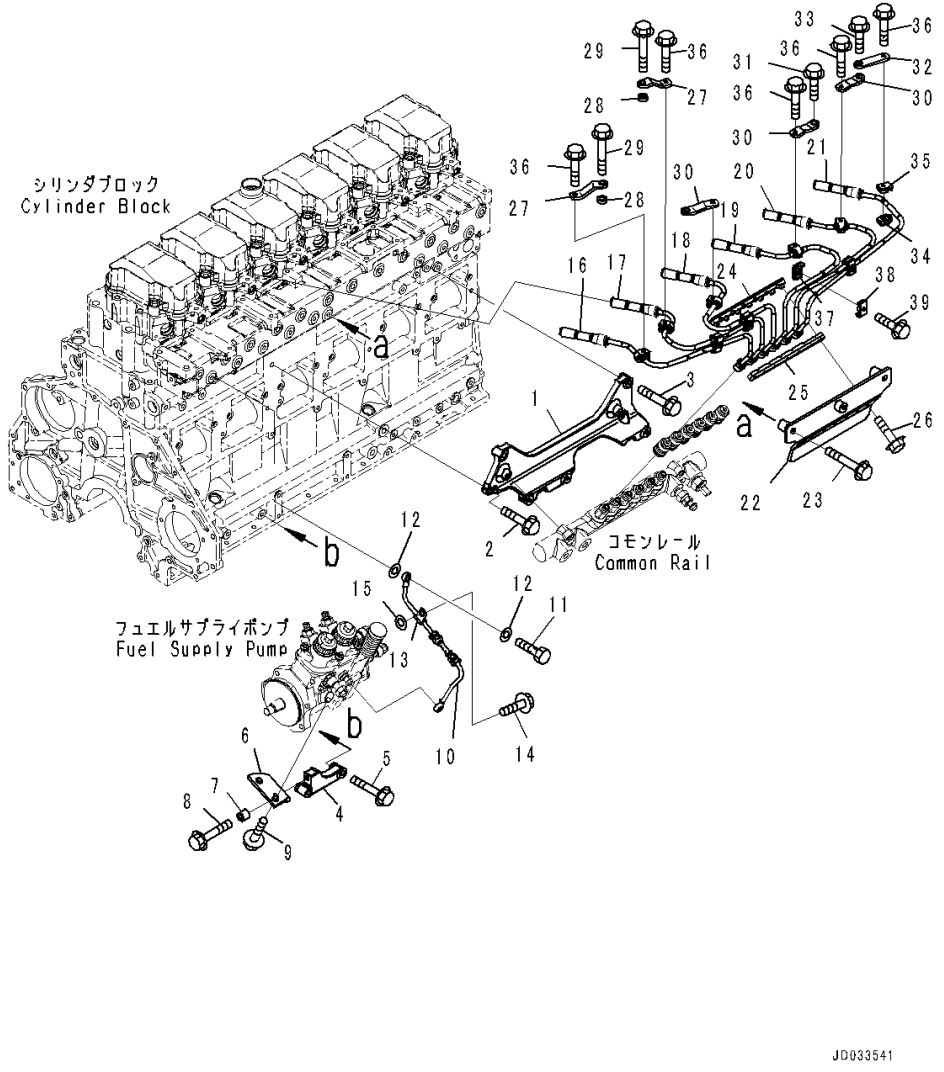

Index	Code	Part Number	Description	Qty	Serial Number
1		6251-21-6110	Bracket, Common Rail	1	567555-
2		01435-01030	Bolt	2	567555-
3		01435-01040	Bolt	1	567555-
4		6156-21-6121	Bracket	1	567555-
5		01435-01045	Bolt	2	567555-
6		6251-21-6130	Bracket, Supply Pump	1	567555-
7		6631-11-5630	Spacer	1	567555-
8		01435-01040	Bolt	1	567555-
9		01435-01220	Bolt	2	567555-
10		6156-71-5611	Hose, Lubricator	1	567555-
11		07206-30710	Bolt, Joint	1	567555-
12		07005-01012	Seal, Washer	2	567555-
13		600-051-6080	Clip	1	567555-
14		01435-01020	Bolt	1	567555-
15		01643-31032	Washer	1	567555-
16		6251-71-5112	Tube, Fuel Supply, No.1	1	567555-
17		6251-71-5122	Tube, Fuel Supply, No.2	1	567555-
18		6251-71-5132	Tube, Fuel Supply, No.3	1	567555-
19		6251-71-5142	Tube, Fuel Supply, No.4	1	567555-
20		6251-71-5152	Tube, Fuel Supply, No.5	1	567555-
21		6251-71-5162	Tube, Fuel Supply, No.6	1	567555-
22		6251-71-5240	Bracket	1	567555-
23		01435-01050	Bolt	2	567555-
24		6217-71-5261	Clamp, Half	1	567555-
25		6217-71-5761	Clamp, Half	1	567555-
26		01435-00635	Bolt	7	567555-
27		6251-71-5210	Bracket	2	567555-
28		6162-73-5940	Spacer	2	567555-
29		01435-01050	Bolt	2	567555-
30		6251-71-5230	Bracket	3	567555-
31		01435-01020	Bolt	2	567555-
32		6251-71-5220	Bracket	1	567555-
33		01435-01025	Bolt	1	567555-
34		6261-71-6660	Clamp, Half	6	567555-
35		6261-71-6670	Clamp, Half	6	567555-
36		01435-00630	Bolt	6	567555-
37		6251-71-5840	Clamp, Half	4	567555-
38		6251-71-5850	Clamp, Half	4	567555-
39		01435-00625	Bolt	4	567555-

FIG. A4030-001002 Fuel Injection Controller Related Parts (Fuel Piping) (2/2)

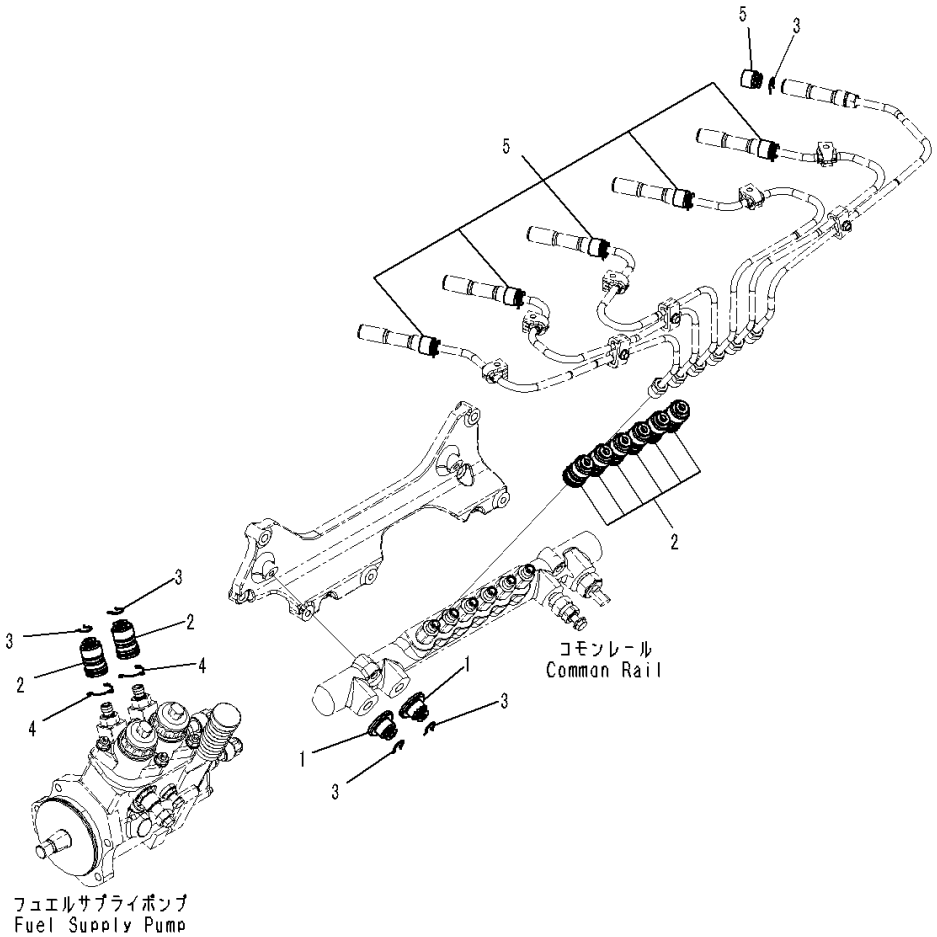

Index	Code	Part Number	Description	Qty	Serial Number
1		6217-71-9780	Cap, Supple Tube	2	567555-
2		6217-71-9791	Cover, Supply Tube	8	567555-
3		6754-71-5750	Clip	10	571824-
		6217-71-5770	Clip	10	567555-581723
4		6156-71-9730	Clip	2	567555-
5		6251-71-9710	Cover, Supply Tube	6	567555-

FIG. A4230-001001 Fuel Return

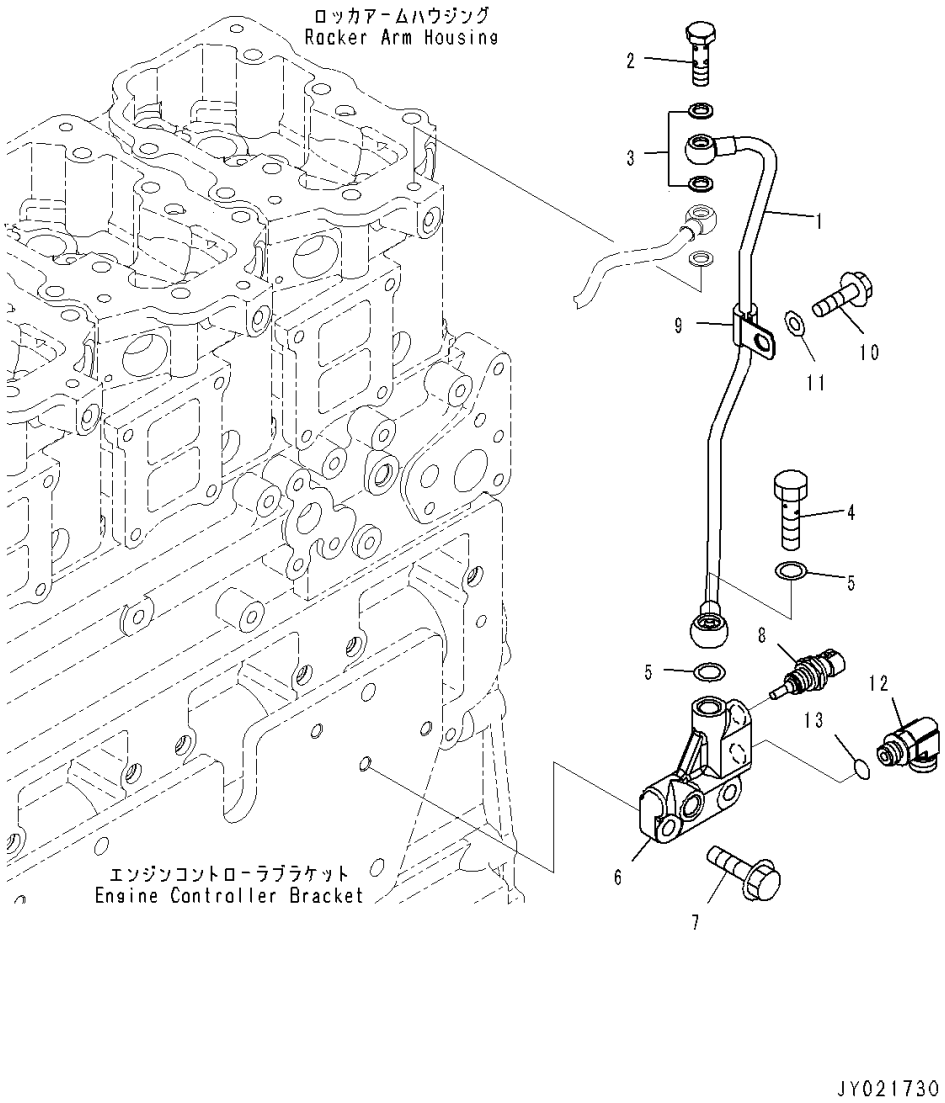

Index	Code	Part Number	Description	Qty	Serial Number
1		6251-71-5490	Tube	1	567555-
2		6215-11-6560	Bolt, Joint	1	567555-
3		07005-01012	Seal, Washer	2	567555-
4		07206-31014	Bolt, Joint	1	567555-
5		07005-01412	Seal, Washer	2	567555-
6		6251-71-5660	Block	1	567555-
7		01435-01030	Bolt	2	567555-
8		6261-81-6901	Sensor Assembly, Temperature	1	567555-
		6216-84-9740	• Seal	1	567555-
9		600-051-6080	Clip	1	567555-
10		01435-01030	Bolt	1	567555-
11		01643-31032	Washer	2	567555-
12		6251-51-9810	Elbow	1	567555-
13		6251-51-9910	O-ring	1	567555-

FIG. A4119-001001 Fuel Filter Cartridge (Service Only)

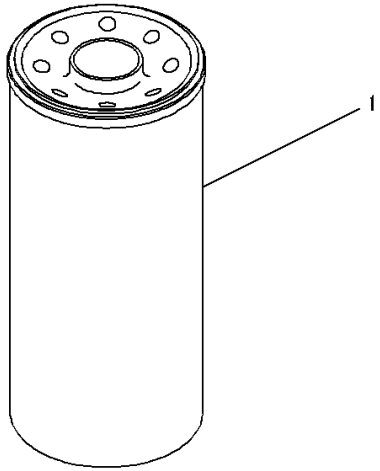

Index	Code	Part Number	Description	Qty	Serial Number
1		600-319-3841	Cartridge	1	568996-

ENGINE COOLING SYSTEM

FIG. A1730-002001 Thermostat and Thermostat Housing

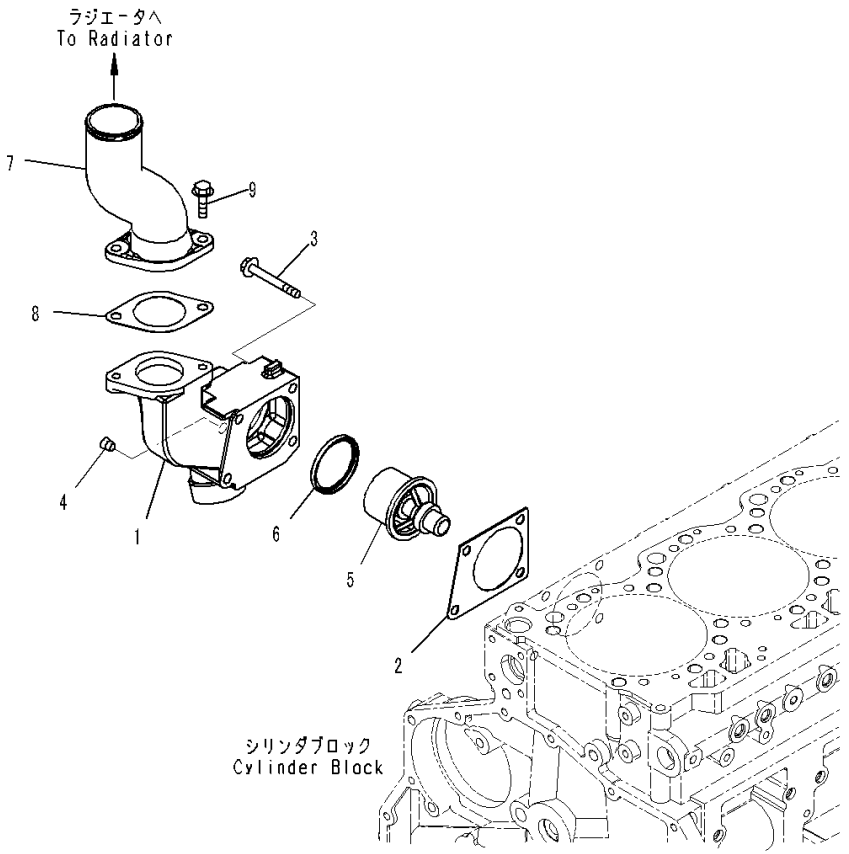

Index	Code	Part Number	Description	Qty	Serial Number
1		6251-21-6410	Housing, Thermostat	1	567555-
2		6150-22-6490	Gasket	1	567555-
3		01437-01065	Bolt	2	567555-
4		02720-20204	Plug	1	567555-
5		600-421-6630	Thermostat	1	567555-
6		6162-13-6440	Seal, Oil, Thermostat	1	567555-
7		6251-61-6270	Connector	1	567555-
8		6210-61-6441	Gasket	1	567555-
9		01435-01025	Bolt	1	567555-

FIG. A5060-001001 Cooling Fan Drive

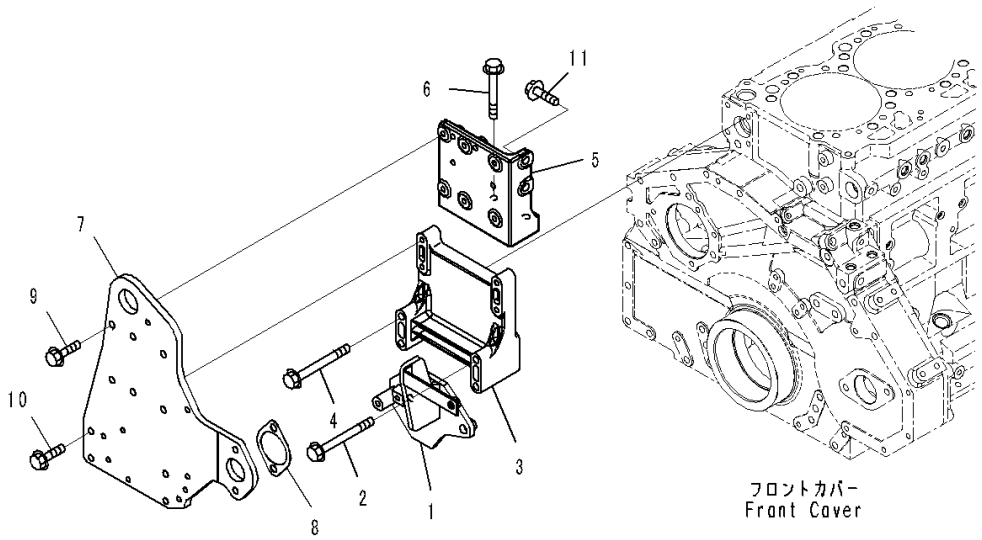

Index	Code	Part Number	Description	Qty	Serial Number
1		421-S62-4220	Bracket	1	567555-
2		01436-01005	Bolt	2	567555-
3		6251-61-3520	Bracket	1	567555-
4		01436-01000	Bolt	2	567555-
5		6251-61-3820	Bracket	1	567555-
6		01435-01095	Bolt	2	567555-
7		6251-21-3950	Plate	1	567555-
8		6166-61-6341	Gasket	1	567555-
9		01435-01025	Bolt	6	567555-
10		01435-01035	Bolt	4	567555-
11		01435-01030	Bolt	2	567555-

FIG. A5010-001001A Water Pump Mounting and Air Vent

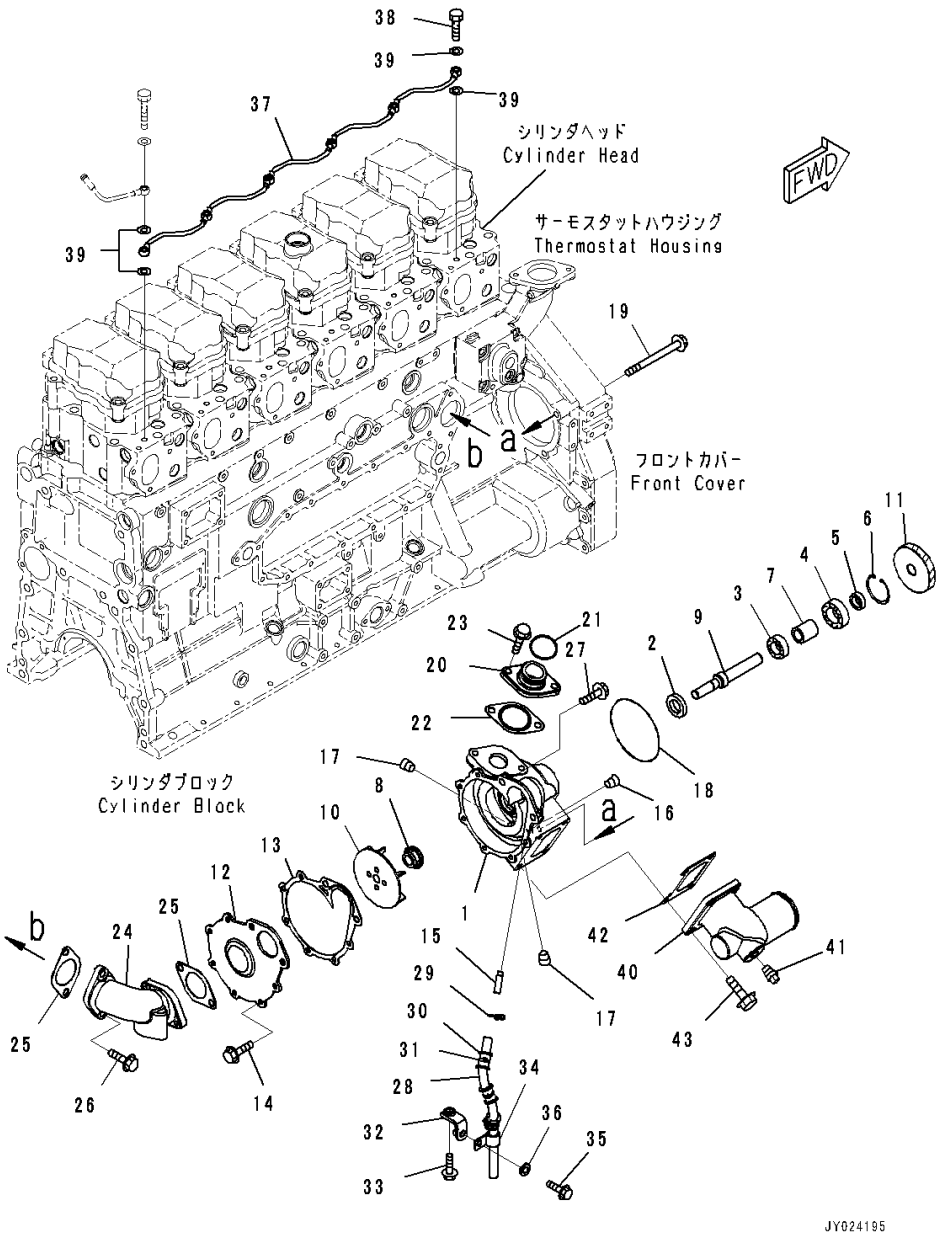

Index	Code	Part Number	Description	Qty	Serial Number
		6251-61-1102	Water Pump Assembly	1	572807-
1		6251-61-1111	• Body	1	572807-
2		6150-61-1510	• Seal, Oil	1	567555-
3		06030-06004	• Bearing, Ball	1	567555-
4		06030-06304	• Bearing, Ball	1	567555-
5		6150-61-1350	• Spacer	1	567555-
6		04065-05220	• Ring, Snap	1	567555-
7		6151-61-1360	• Spacer	1	567555-
8		6211-61-1533	• Seal, Water	1	567555-
9		6151-62-1310	• Shaft	1	567555-
10		6251-61-1210	• Impeller	1	567555-
11		6150-61-1410	• Gear	1	567555-
12		6154-61-1150	• Cover	1	567555-
13		6151-61-1162	• Gasket	1	567555-
14		01435-00816	• Bolt	6	567555-
15		6240-61-1250	• Pipe	1	572807-
16		07046-41610	• Plug	1	572807-
17		6934-62-1360	• Plug	2	572807-
18		07000-72115	O-ring	1	567555-
19		01436-01025	Bolt	3	567555-
20		6150-62-6510	Connector	1	567555-
21		02893-05037	O-ring	1	567555-
22		6150-61-1821	Gasket	1	567555-
23		01435-01020	Bolt	2	567555-
24		6251-61-6310	Connector	1	567555-
25		6150-61-1821	Gasket	2	567555-
26		01435-01030	Bolt	2	567555-
27		01435-01035	Bolt	2	567555-
28		07286-01020	Hose	1	572807-
29		6144-61-6510	Clip	1	572807-
30		07095-20213	Cushion	1	572807-
31		6218-81-8470	Band	1	572807-
32		6251-61-1920	Bracket	1	572807-
33		01435-01060	Bolt	2	572807-
34		04434-51508	Clip	1	572807-
35		01435-00816	Bolt	1	572807-
36		01643-30823	Washer	1	572807-
37		6251-11-6460	Tube, Air Vent	1	567555-
38		07206-30710	Bolt, Joint	6	567555-
39		07005-01012	Seal, Washer	12	567555-

FIG. A5010-001001A Water Pump Mounting and Air Vent

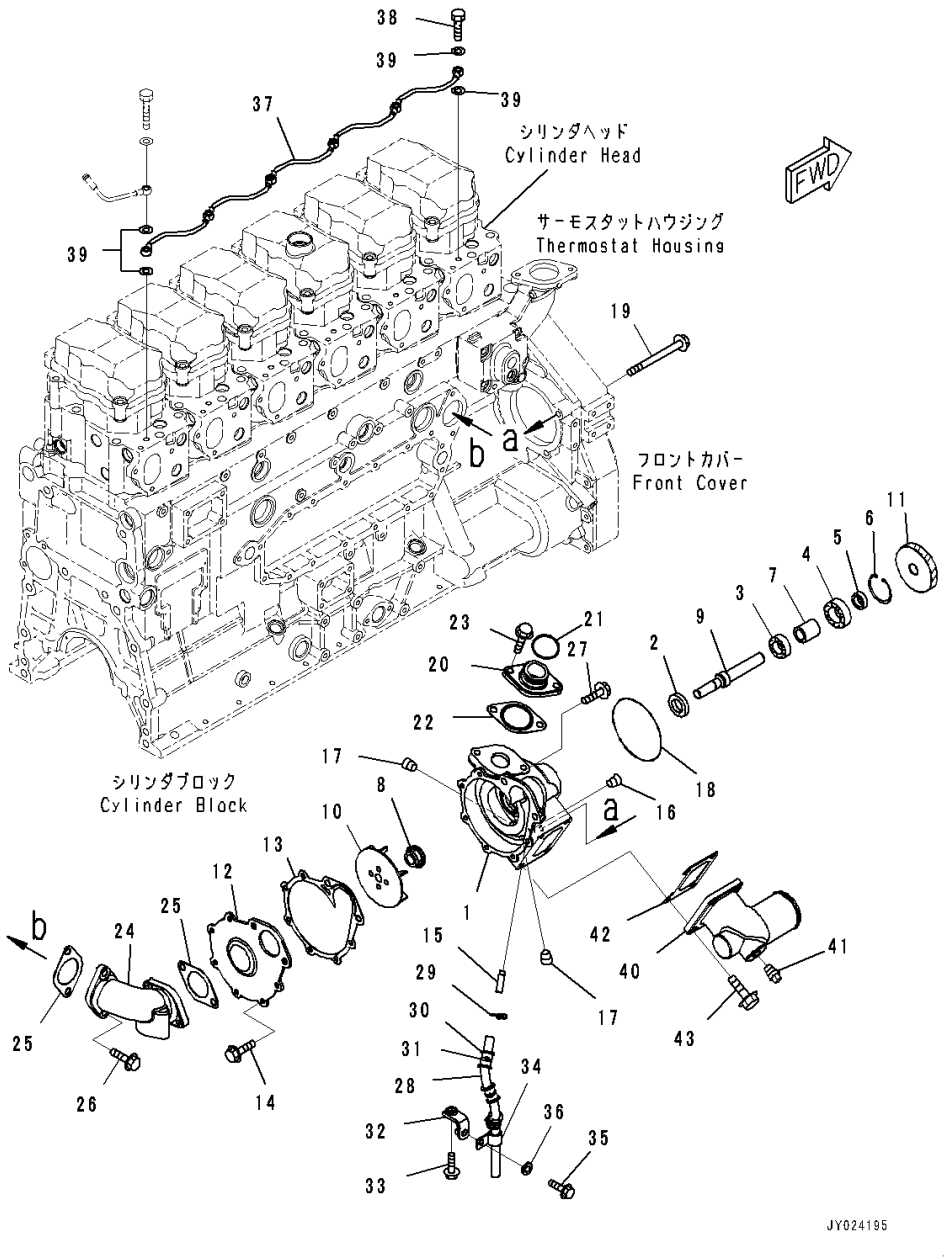

Index	Code	Part Number	Description	Qty	Serial Number
40		6150-61-6920	Connector	1	567555-
41		07042-A0415	Plug	1	567555-
42		6150-61-6911	Gasket	1	567555-
43		01437-01025	Bolt	4	567555-

FIG. A5210-001001 Corrosion Resistor (Without Corrosion Resister)

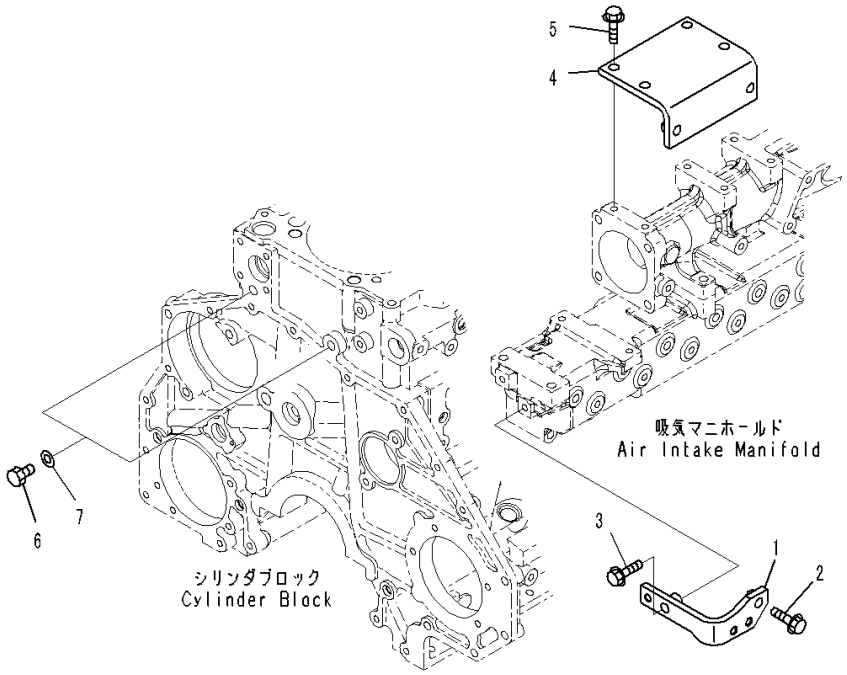

Index	Code	Part Number	Description	Qty	Serial Number
1		6251-61-8280	Bracket	1	567555-
2		01435-01030	Bolt	1	567555-
3		01435-01035	Bolt	1	567555-
4		6251-61-8170	Bracket	1	567555-
5		01435-01025	Bolt	4	567555-
6		6110-53-5910	Plug	2	567555-
7		07005-01412	Seal, Washer	2	567555-

ENGINE ELECTRICAL SYSTEM

FIG. A6010-001001 Alternator (50Amp, For Hardened Pulley) (Inner Parts)

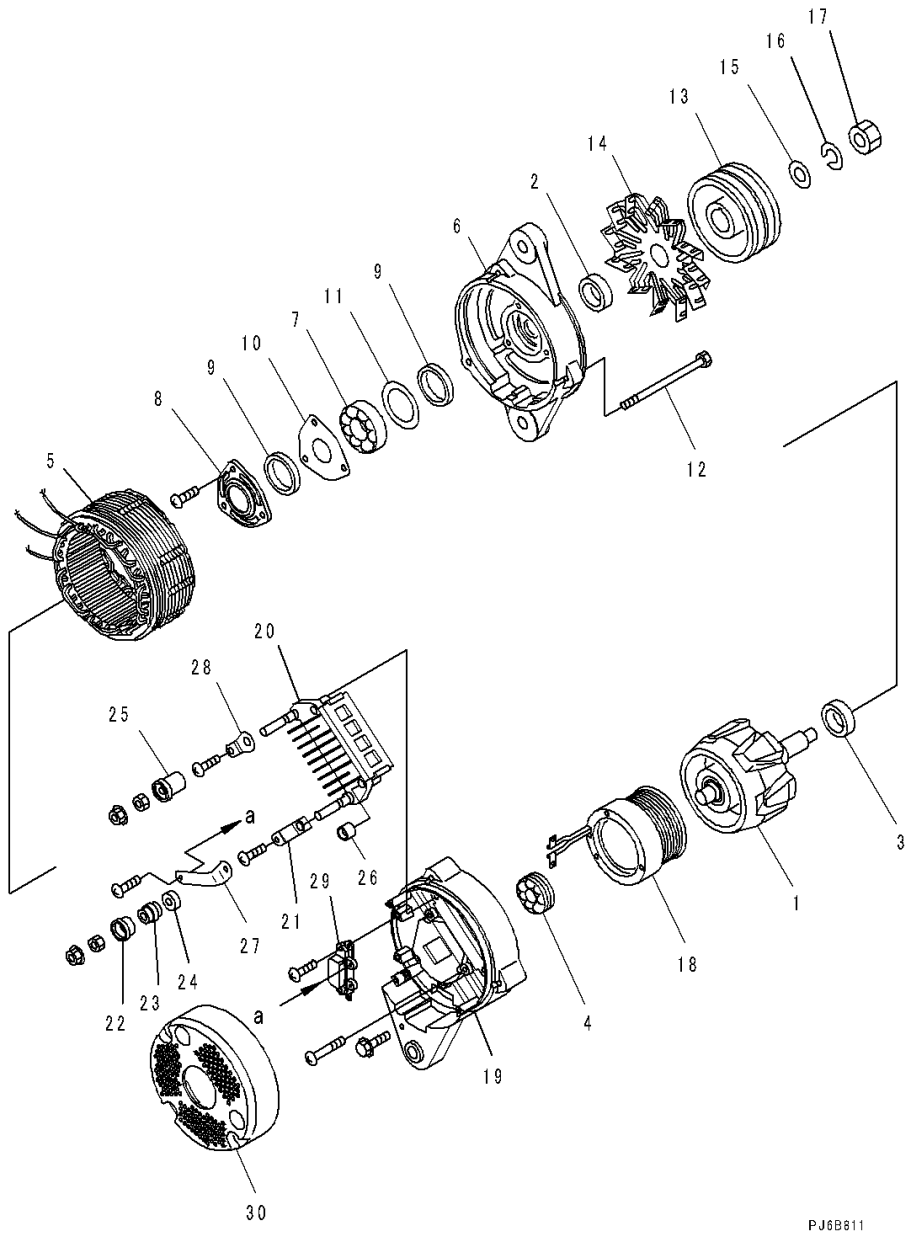

Index	Code	Part Number	Description	Qty	Serial Number
		600-825-5220	Alternator, 50Amp.	1	567555-
1		KD0-35100-0300	• Rotor Assembly	1	567555-
2		KD1-33923-0790	• Collar	1	567555-
3		KD0-35923-0160	• Collar	1	567555-
4		KD0-09201-0980	• Bearing, Ball	1	567555-
5		KD0-35200-0440	• Stator Assembly	1	567555-
6		KD0-35300-0190	• Bracket Assembly	1	567555-
7		KD0-09201-0881	• • Bearing, Ball	1	567555-
8		KD0-35926-0070	• • Retainer	1	567555-
9		KD0-35951-0060	• • Packing	2	567555-
10		KD0-35926-0090	• • Retainer	1	567555-
11		KD1-33926-0730	• • Retainer	1	567555-
12		KD0-0275-06802	• Bolt	3	567555-
13		KD0-35411-0750	• Pulley, Hardening	1	567555-
14		KD0-35421-0170	• Fan	1	567555-
15		KD1-0330-16012	• Washer, Plain	1	567555-
16		KD1-0335-16002	• Washer, Spring	1	567555-
17		KD0-0280-16022	• Nut	1	567555-
18		KD0-35120-0230	• Coil, Field	1	567555-
		KD0-35700-0821	• Bracket Assembly, Rear	1	567555-
19		KD0-35710-1010	• • Bracket, Rear	1	567555-
20		KD0-35730-0510	• • Rectifier Assembly	1	567555-
21		KD0-09170-2501	• • Condenser	1	567555-
22		KD0-35943-0140	• • Bushing	1	567555-
23		KD0-35943-0150	• • Bushing	1	567555-
24		KD0-35943-0160	• • Bushing	1	567555-
25		KD0-35943-0170	• • Bushing	1	567555-
26		KD0-35923-0130	• • Collar	1	567555-
27		KD0-35784-0210	• • Bar, Connect	1	567555-
28		KD0-35784-0290	• • Bar, Plate	1	567555-
29		KD0-35719-0201	• • Regulator Assembly	1	567555-
30		KD0-35761-0250	• Cover	1	567555-

FIG. A6010-001002 Alternator (Mounting)

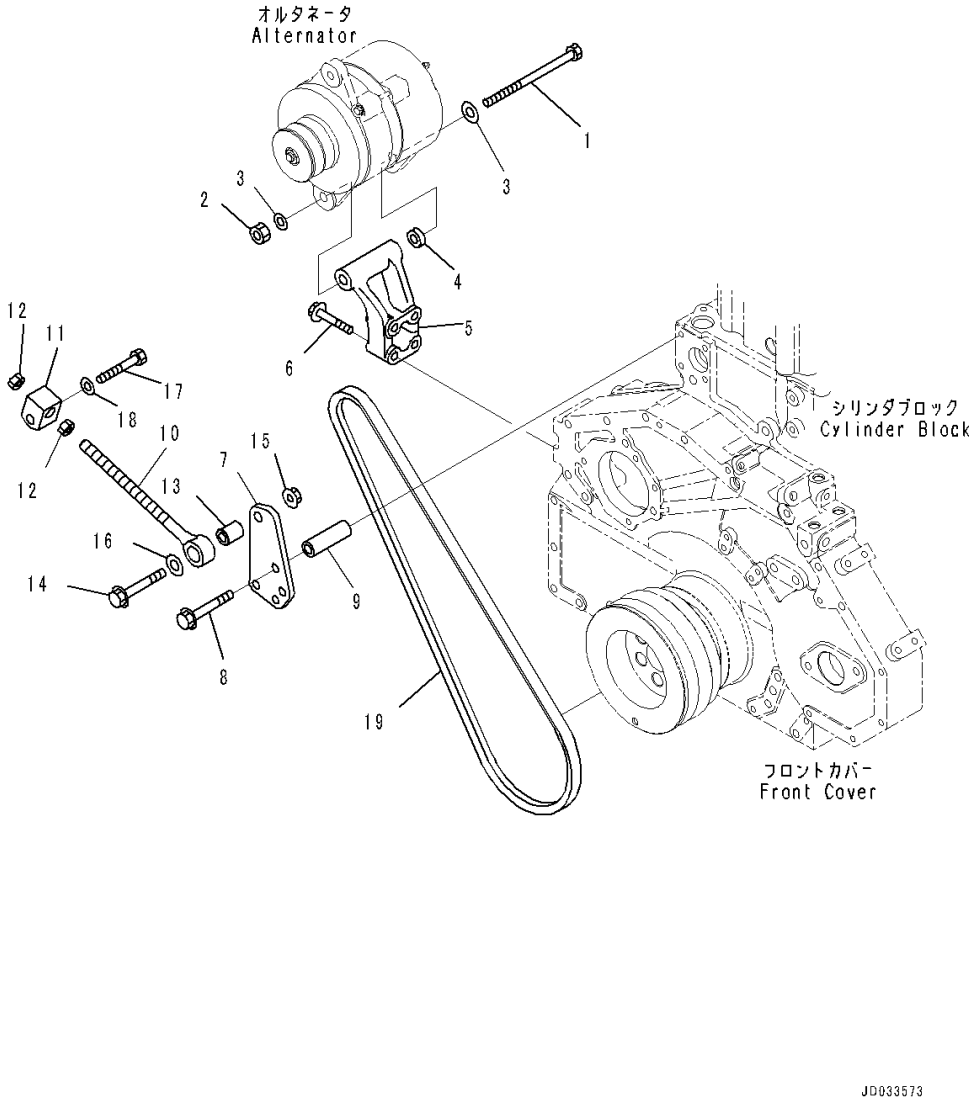

Index	Code	Part Number	Description	Qty	Serial Number
		Note: This list covers following specifications.			
		50Amp, For Hardened Pulley			
		50Amp			
1		6128-21-6780	Bolt	1	567555-
2		02205-10812	Nut	1	567555-
3		01640-21323	Washer	2	567555-
4		205-62-54561	Spacer	1	567555-
5		6154-81-6411	Bracket	1	567555-
6		01435-01055	Bolt	4	567555-
7		6150-82-8650	Plate	1	567555-
8		01435-01090	Bolt	2	567555-
9		6211-11-9790	Spacer	2	567555-
10		6150-82-8610	Rod, Adjusting	1	567555-
11		6150-82-8690	Plate	1	567555-
12		01580-11411	Nut	2	567555-
13		6215-81-6150	Pin	1	567555-
14		01435-01255	Bolt	1	567555-
15		01584-01210	Nut	1	567555-
16		01643-31232	Washer	1	567555-
17		01050-51255	Bolt	1	567555-
18		01643-31232	Washer	1	567555-
19		04120-21754	V-belt	1	567555-

FIG. A6010-003001 Alternator (50Amp) (Inner Parts)

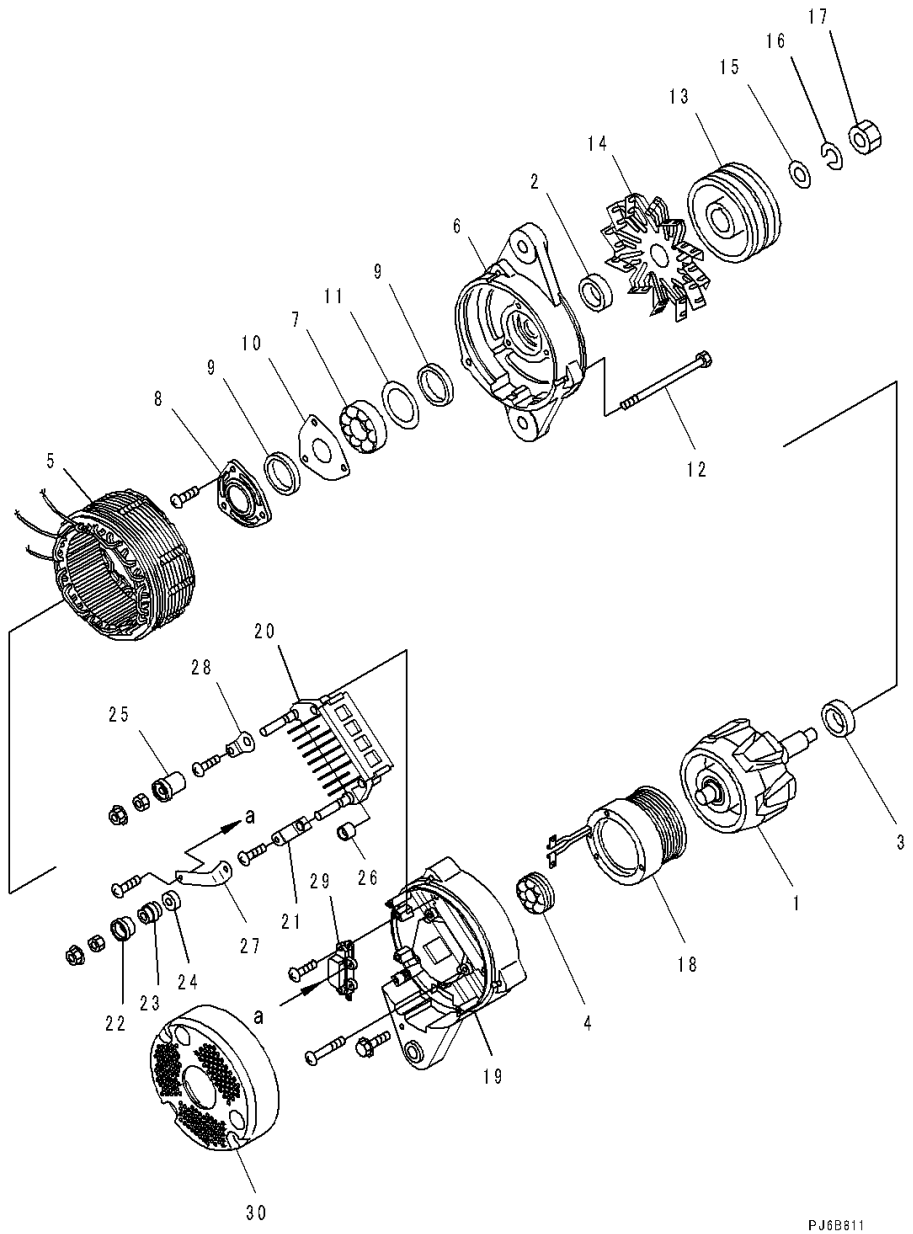

Index	Code	Part Number	Description	Qty	Serial Number
		600-825-5120	Alternator, 50Amp.	1	567555-
1		KD0-35100-0300	• Rotor Assembly	1	567555-
2		KD1-33923-0790	• Collar	1	567555-
3		KD0-35923-0160	• Collar	1	567555-
4		KD0-09201-0980	• Bearing, Ball	1	567555-
5		KD0-35200-0440	• Stator Assembly	1	567555-
6		KD0-35300-0190	• Bracket Assembly	1	567555-
7		KD0-09201-0881	• • Bearing, Ball	1	567555-
8		KD0-35926-0070	• • Retainer	1	567555-
9		KD0-35951-0060	• • Packing	2	567555-
10		KD0-35926-0090	• • Retainer	1	567555-
11		KD1-33926-0730	• • Retainer	1	567555-
12		KD0-0275-06802	• Bolt	3	567555-
13		KD0-35411-0590	• Pulley, Non Hardening	1	567555-
14		KD0-35421-0170	• Fan	1	567555-
15		KD1-0330-16012	• Washer, Plain	1	567555-
16		KD1-0335-16002	• Washer, Spring	1	567555-
17		KD0-0280-16022	• Nut	1	567555-
18		KD0-35120-0230	• Coil, Field	1	567555-
		KD0-35700-0821	• Bracket Assembly, Rear	1	567555-
19		KD0-35710-1010	• • Bracket, Rear	1	567555-
20		KD0-35730-0510	• • Rectifier Assembly	1	567555-
21		KD0-09170-2501	• • Condenser	1	567555-
22		KD0-35943-0140	• • Bushing	1	567555-
23		KD0-35943-0150	• • Bushing	1	567555-
24		KD0-35943-0160	• • Bushing	1	567555-
25		KD0-35943-0170	• • Bushing	1	567555-
26		KD0-35923-0130	• • Collar	1	567555-
27		KD0-35784-0210	• • Bar, Connect	2	567555-
28		KD0-35784-0290	• • Bar, Plate	1	567555-
29		KD0-35719-0201	• • Regulator Assembly	1	567555-
30		KD0-35761-0250	• Cover	1	567555-

FIG. A6210-001001 Starting Motor (7.5KW) (Inner Parts)

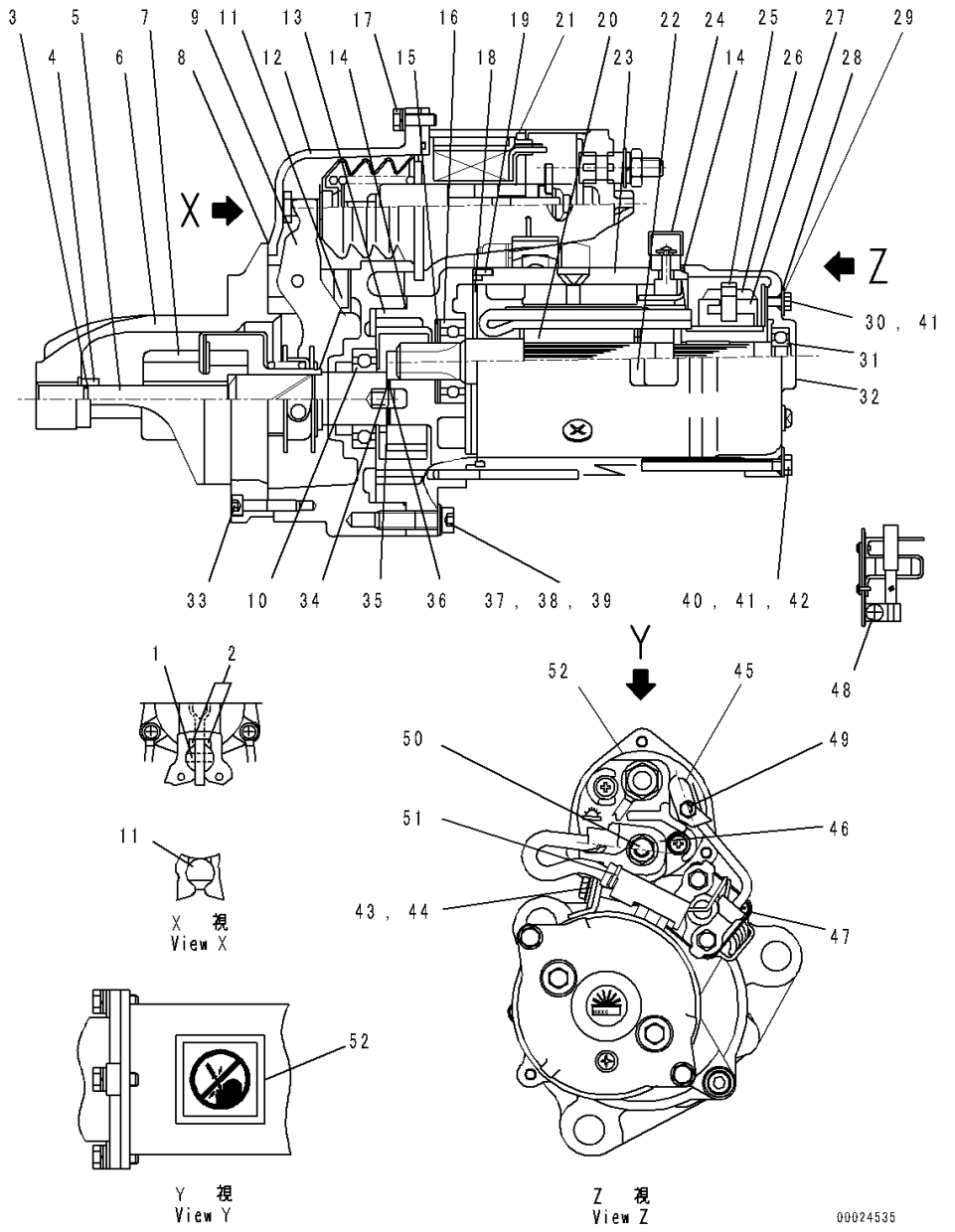

Index	Code	Part Number	Description	Qty	Serial Number
		600-813-6632	Starting Motor Assembly, 7.5Kw	1	567555-
1		KD0-23904-0070	• Pin	1	567555-
2		KD0-23927-0071	• Holder	2	567555-
3		KD1-23914-0020	• Ring, Clip	1	567555-
4		KD1-23181-0020	• Stopper, Pinion	1	567555-
5		KD1-23111-0160	• Shaft	1	567555-
6		KD0-23310-0860	• Bracket	1	567555-
7		KD1-23500-0170	• Clutch Assembly, Over Running	1	567555-
8		KD0-23951-0301	• Packing	1	567555-
9		KD0-23320-0220	• Lever Assembly	1	567555-
10		KD1-0456-60067	• Bearing, Ball	1	567555-
11		KD0-23951-0331	• Packing	1	567555-
12		KD0-23600-0430	• Bracket Assembly, Center	1	567555-
13		KD0-23611-0690	• Bracket, Center	1	567555-
14		KD1-09211-0980	• O-ring	2	567555-
15		KD0-23921-0230	• Washer	1	567555-
16		KD1-0454-62047	• Bearing, Ball	1	567555-
17		KD0-0274-06202	• Bolt	3	567555-
18		KD1-23951-0020	• Packing	1	567555-
19		KD1-0400-20100	• Pin, Straight	1	567555-
20		KD0-23100-0251	• Armature Assembly	1	567555-
21		KD0-47100-4800	• Switch Assembly, Magnetic	1	567555-
22		KD0-09271-3620	• Name Plate	1	567555-
23		KD0-23200-0331	• Yoke Assembly	1	567555-
24		KD0-47761-2691	• Cover	1	567555-
25		KD1-23913-0040	• Spring, Brush	4	567555-
26		KD0-23740-0250	• Brush Assembly	4	567555-
27		KD0-23750-0250	• Holder Assembly, Brush	1	567555-
28		KD1-0505-00601	• O-ring	2	567555-
29		KD1-47921-0790	• Washer	2	567555-
30		KD0-09001-4580	• Bolt	2	567555-
31		KD1-0454-62007	• Bearing, Ball	1	567555-
32		KD0-23700-0130	• Bracket Assembly, Rear	1	567555-
33		KD1-0240-06305	• Bolt	6	567555-
34		KD1-23921-0130	• Washer	1	567555-
35		KD1-23921-0140	• Washer	1	567555-
36		KD1-23941-0040	• Washer, Insulate	1	567555-
37		KD1-0240-08405	• Bolt	3	567555-
38		KD1-0335-08002	• Washer, Spring	3	567555-
39		KD1-0330-08022	• Washer, Plain	3	567555-

FIG. A6210-001001 Starting Motor (7.5KW) (Inner Parts)

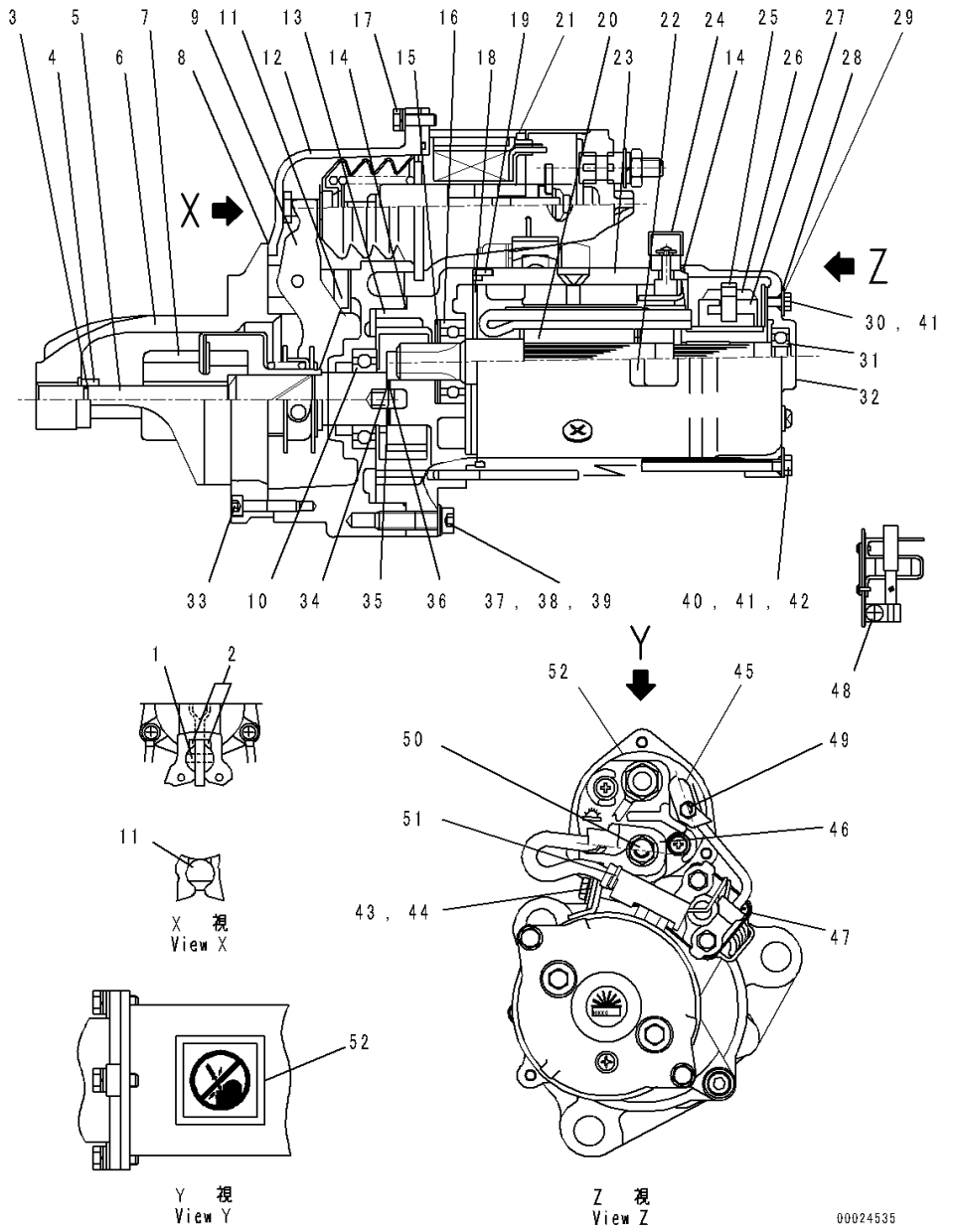

Index	Code	Part Number	Description	Qty	Serial Number
40		KD0-23901-0170	• Bolt	2	567555-
41		KD1-0335-06002	• Washer, Spring	4	567555-
42		KD1-0330-06012	• Washer, Prain, Plain	2	567555-
43		KD0-0270-06402	• Bolt	1	567555-
44		KD1-47927-1250	• Holder	1	567555-
45		KD0-47761-2681	• Cover	1	567555-
46		KD0-47761-2671	• Cover	1	567555-
47		KD0-25000-8332	• Switch Assembly	1	567555-
48		KD0-0055-05082	• Screw	4	567555-
49		KD0-09006-0660	• Nut	1	567555-
50		KD0-09006-0670	• Nut	1	567555-
51		KD1-09257-0050	• Band	1	567555-
52		KD0-09275-1430	• Plate, Caution	1	567555-

FIG. A6210-001002 Starting Motor (7.5KW) (Mounting)

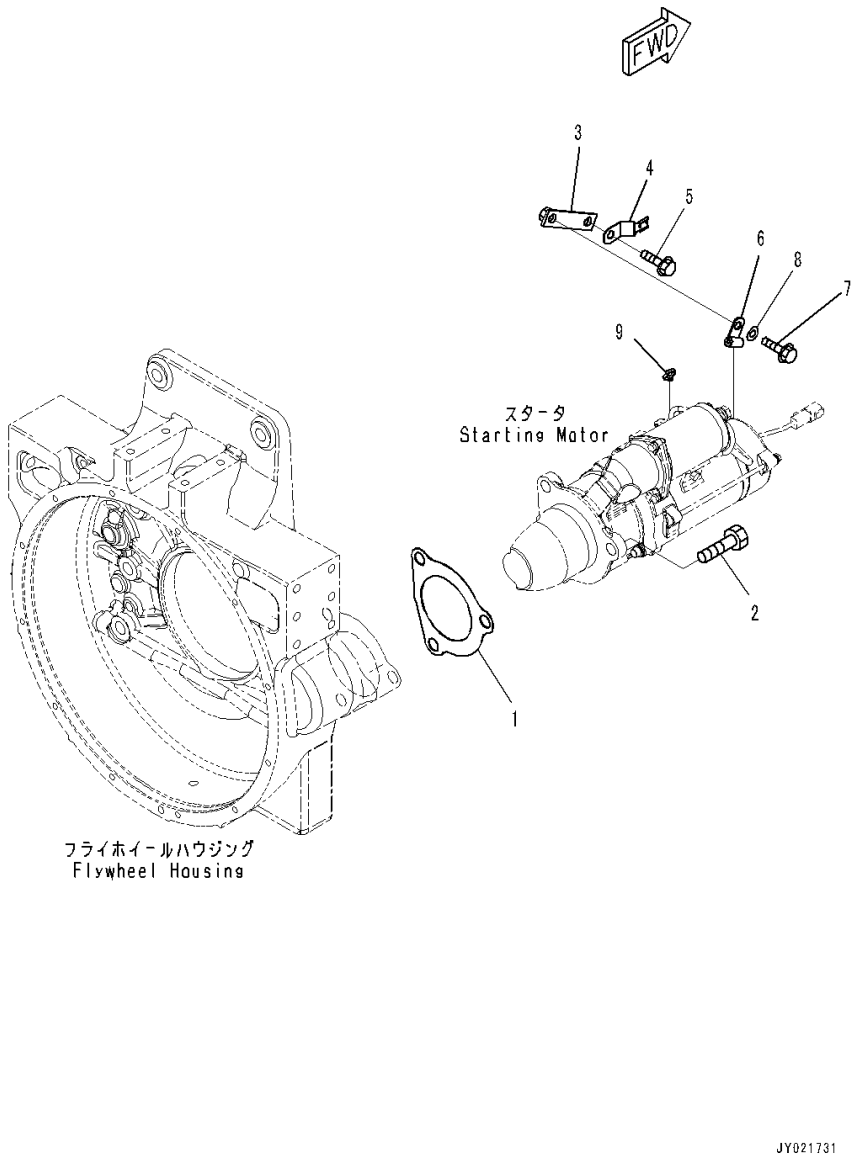

Index	Code	Part Number	Description	Qty	Serial Number
1		6221-81-6810	Gasket	1	567555-
2		01010-81640	Bolt	3	567555-
3		421-62-11940	Plate	1	567555-
4		08193-20010	Clip	1	567555-
5		01435-01020	Bolt	1	567555-
6		600-051-2050	Clip	1	567555-
7		01435-01020	Bolt	1	567555-
8		01643-31032	Washer	1	567555-
9		6218-81-8470	Band	1	567555-

FIG. A6210-002001 Starting Motor (11KW) (Inner Parts)

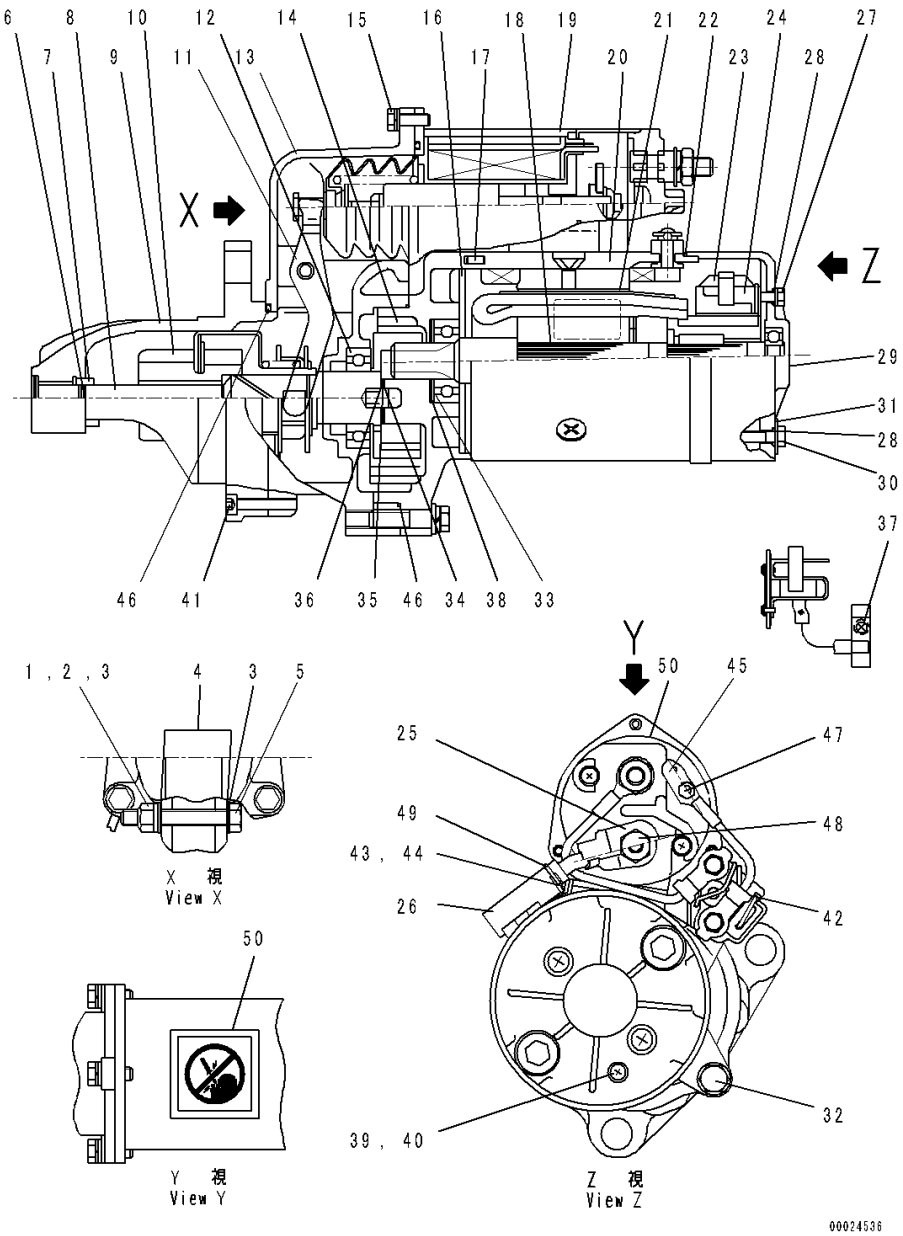

Index	Code	Part Number	Description	Qty	Serial Number
		600-813-9322	Starting Motor Assembly	1	567555-
1		KD1-09279-0090	• Nut	1	567555-
2		KD1-0335-08002	• Washer, Spring	4	567555-
3		KD1-0330-08022	• Washer	5	567555-
4		KD1-0345-08001	• Washer, Seal	2	567555-
5		KD0-23303-0020	• Pin, Lever	1	567555-
6		KD1-23914-0020	• Ring, Clip	1	567555-
7		KD1-23181-0020	• Stopper, Pinion	1	567555-
8		KD0-23120-0180	• Shaft Assembly	1	567555-
9		KD0-23310-1670	• Bracket Assembly, Front	1	567555-
10		KD1-23500-0970	• Clutch Assembly, Over Running	1	567555-
11		KD1-23320-0290	• Lever Assembly	1	567555-
12		KD0-09201-0850	• Bearing, Ball	1	567555-
13		KD0-23500-0410	• Bracket Assembly, Center	1	567555-
14		KD0-23511-1101	• Bracket, Center	1	567555-
15		KD0-0270-06202	• Bolt	3	567555-
16		KD1-23951-0051	• Packing	1	567555-
17		KD1-0400-30100	• Pin, Straight	1	567555-
18		KD0-23100-0430	• Armature Assembly	1	567555-
19		KD0-47100-4651	• Switch Assembly	1	567555-
20		KD0-23200-0671	• Yoke Assembly	1	567555-
21		KD0-09271-3620	• Name Plate	1	567555-
22		KD1-09211-1120	• O-ring	1	567555-
23		KD0-23740-0351	• Brush Assembly	2	567555-
24		KD0-23750-0490	• Holder Assembly	1	567555-
25		KD0-47761-2681	• Cover	1	567555-
26		KD0-47761-2691	• Cover	1	567555-
27		KD0-09011-3140	• Screw	2	567555-
28		KD1-09211-0081	• O-ring	2	567555-
29		KD0-23710-0221	• Bracket, Rear	1	567555-
30		KD0-09001-4380	• Bolt	2	567555-
31		KD1-47921-0790	• Washer	2	567555-
32		KD0-0276-08402	• Bolt	3	567555-
33		KD0-09057-0110	• Washer	1	567555-
34		KD1-23941-0040	• Washer, Insulate	1	567555-
35		KD1-23921-0140	• Washer	1	567555-
36		KD1-23921-0130	• Washer	1	567555-
37		KD0-0055-05082	• Screw, Rear	2	567555-
38		KD0-09057-0190	• Washer	1	567555-
39		KD0-0020-05062	• Screw	1	567555-

FIG. A6210-002001 Starting Motor (11KW) (Inner Parts)

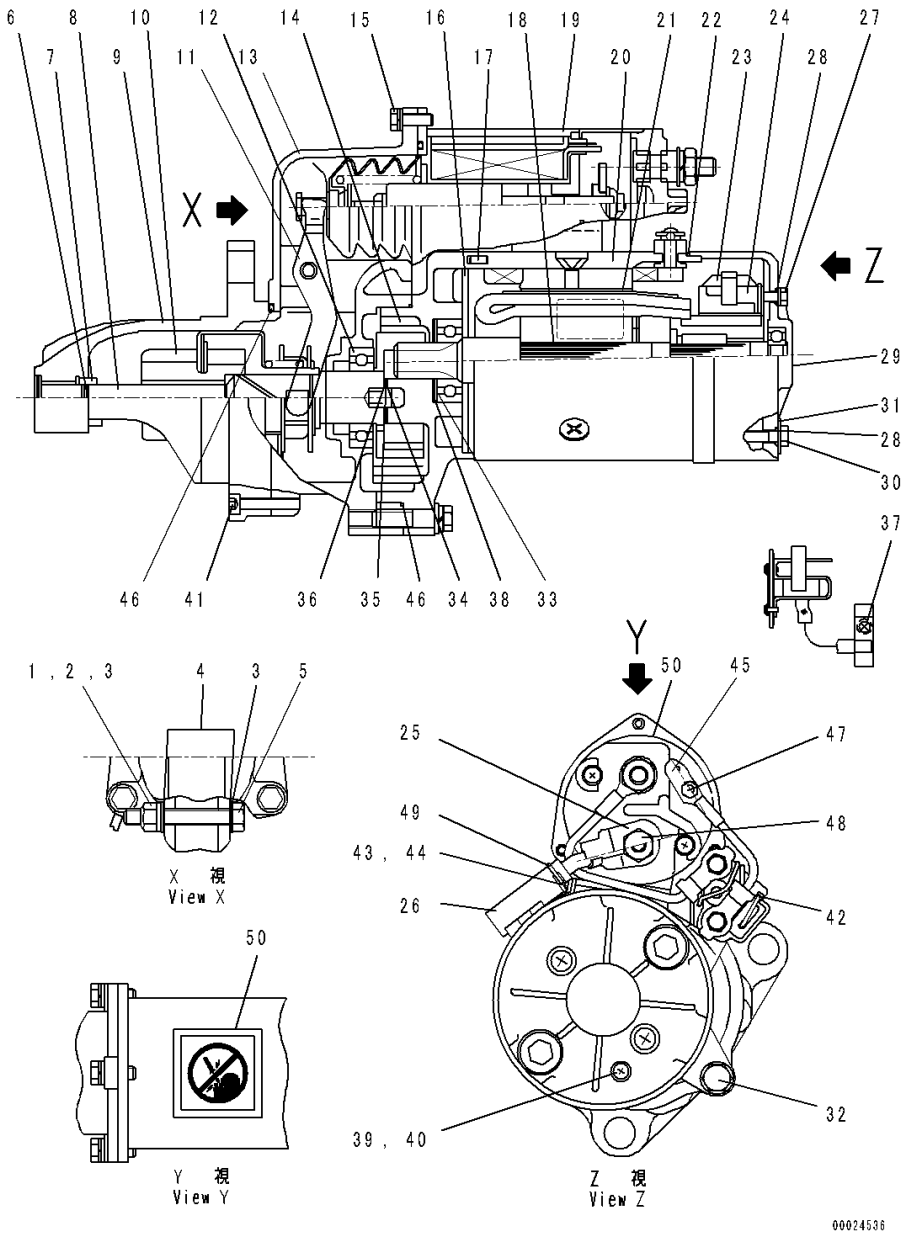

Index	Code	Part Number	Description	Qty	Serial Number
40		KD1-0345-05001	• Washer, Seal	1	567555-
41		KD1-0240-06305	• Bolt	6	567555-
42		KD0-25000-8332	• Switch Assembly	1	567555-
43		KD0-0270-06602	• Bolt	1	567555-
44		KD0-47927-1390	• Holder	1	567555-
45		KD0-47761-2671	• Cover	1	567555-
46		KD1-09211-0981	• O-ring	2	567555-
47		KD0-09006-0660	• Nut	1	567555-
48		KD0-09006-0670	• Nut	1	567555-
49		KD1-09257-0050	• Band	1	567555-
50		KD0-09275-1430	• Plate, Caution	1	567555-

FIG. A6210-002002 Starting Motor (11KW) (Mounting)

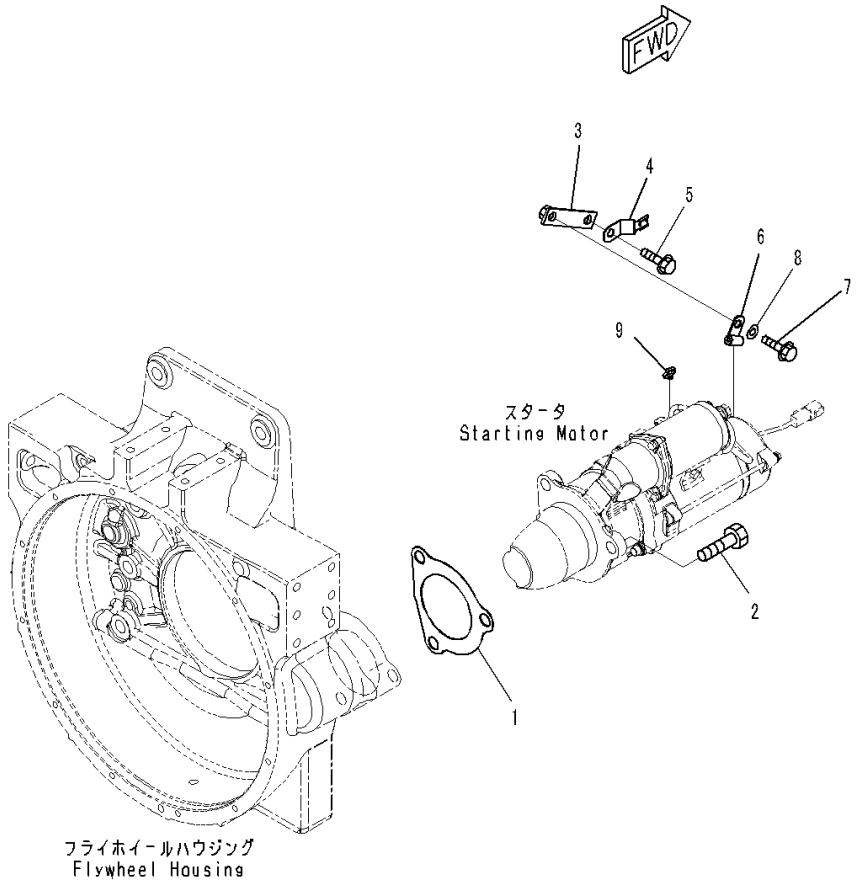

Index	Code	Part Number	Description	Qty	Serial Number
1		6221-81-6810	Gasket	1	567555-
2		01010-81640	Bolt	3	567555-
3		421-62-11940	Plate	1	567555-
4		08193-20010	Clip	1	567555-
5		01435-01020	Bolt	1	567555-
6		600-051-2050	Clip	1	567555-
7		01435-01020	Bolt	1	567555-
8		01643-31032	Washer	1	567555-
9		6218-81-8470	Band	1	567555-

FIG. A6810-002001 Wiring Harness (Engine Wiring Harness)

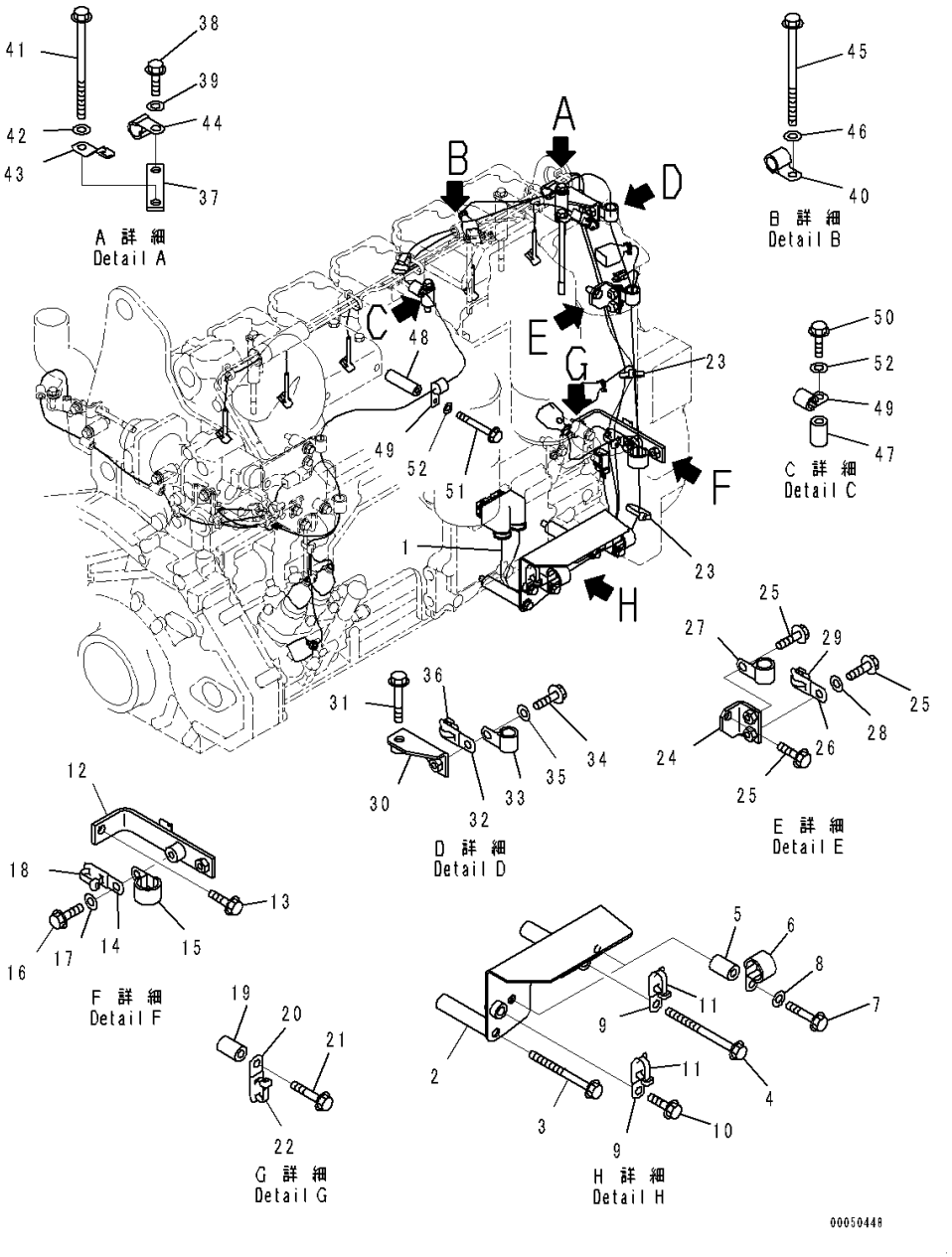

Index	Code	Part Number	Description	Qty	Serial Number
1		6251-81-9810	Wiring Harness	1	567555-
2		6251-81-9730	Bracket	1	567555-
3		01436-01015	Bolt	1	567555-
4		01436-01030	Bolt	1	567555-
5		6144-11-5630	Spacer	2	567555-
6		600-051-2280	Clip	2	567555-
7		01435-01055	Bolt	2	567555-
8		01643-31032	Washer	2	567555-
9		6218-81-8440	Clamp	2	567555-
10		01435-01025	Bolt	1	567555-
11		6218-81-8490	Band	2	567555-
12		421-01-41251	Bracket	1	567555-
13		01435-01020	Bolt	1	567555-
14		6218-81-8440	Clamp	1	567555-
15		600-051-2280	Clip	1	567555-
16		01435-01025	Bolt	1	567555-
17		01643-31032	Washer	1	567555-
18		6218-81-8490	Band	1	567555-
19		6144-11-5630	Spacer	1	567555-
20		6218-81-8440	Clamp	1	567555-
21		01435-01065	Bolt	1	567555-
22		6218-81-8490	Band	1	567555-
23		6218-81-8490	Band	2	567555-
24		6251-81-9270	Bracket	1	567555-
25		01435-01020	Bolt	3	567555-
26		6218-81-8440	Clamp	1	567555-
27		600-051-2200	Clip	1	567555-
28		01643-31032	Washer	1	567555-
29		6218-81-8490	Band	1	567555-
30		6251-81-9660	Bracket	1	567555-
31		01435-01090	Bolt	1	567555-
32		6218-81-8440	Clamp	1	567555-
33		600-051-2180	Clip	1	567555-
34		01435-01020	Bolt	1	567555-
35		01643-31032	Washer	1	567555-
36		6218-81-8490	Band	1	567555-
37		421-62-11940	Plate	1	567555-
38		01435-01020	Bolt	1	567555-
39		01643-31032	Washer	1	567555-
40		600-051-2180	Clip	1	567555-

FIG. A6810-002001 Wiring Harness (Engine Wiring Harness)

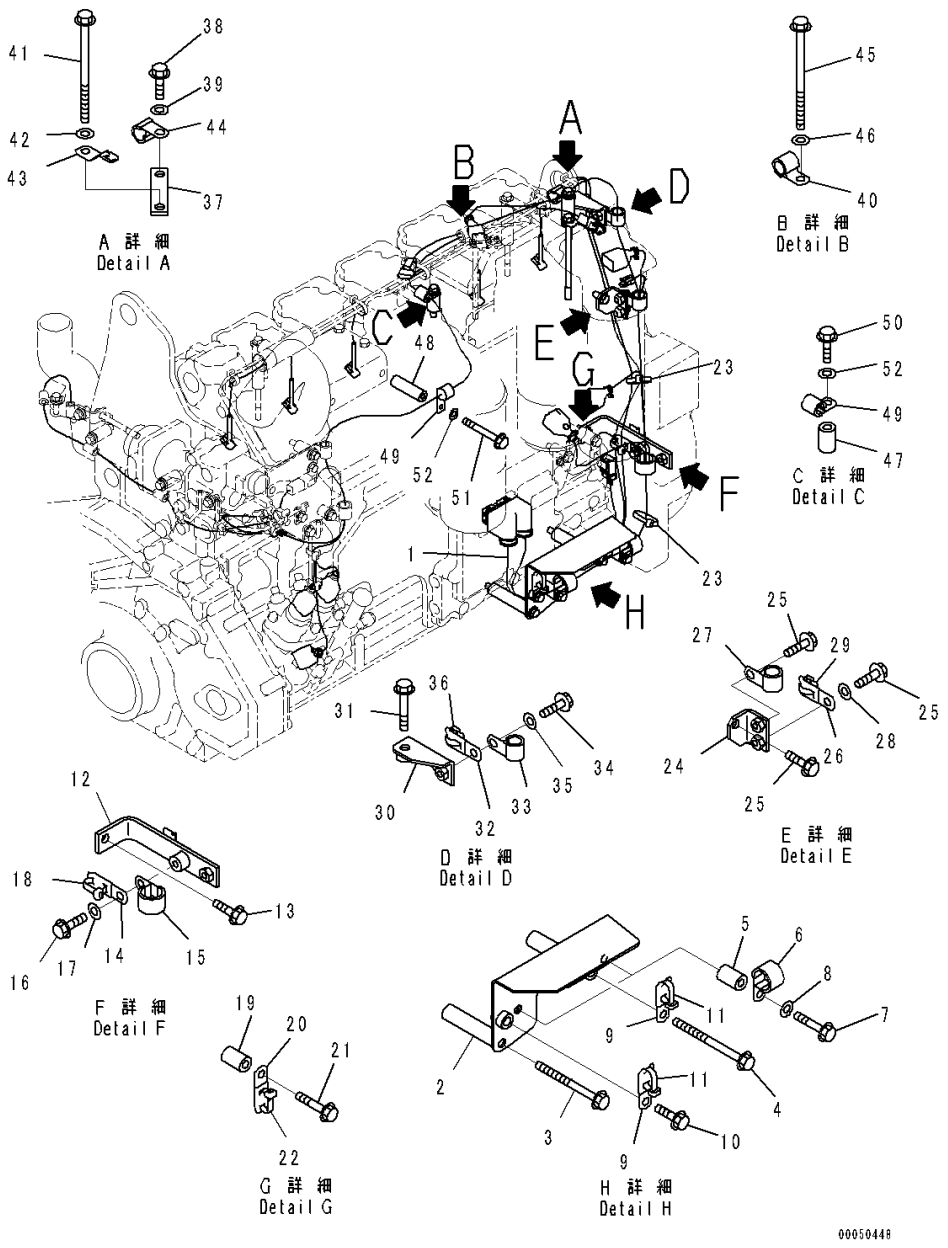

Index	Code	Part Number	Description	Qty	Serial Number
41		01436-01070	Bolt	1	567555-
42		01643-31032	Washer	1	567555-
43		08193-20010	Clip	1	567555-
44		600-051-2140	Clip	1	567555-
45		01436-01065	Bolt	1	567555-
46		01643-31032	Washer	1	567555-
47		6144-11-5630	Spacer	1	567555-
48		6221-81-6940	Spacer	1	567555-
49		600-051-2140	Clip	2	567555-
50		01435-01055	Bolt	1	567555-
51		01435-01095	Bolt	1	567555-
52		01643-31032	Washer	2	567555-

FIG. A6810-002002 Wiring Harness (Wiring Harness Support)

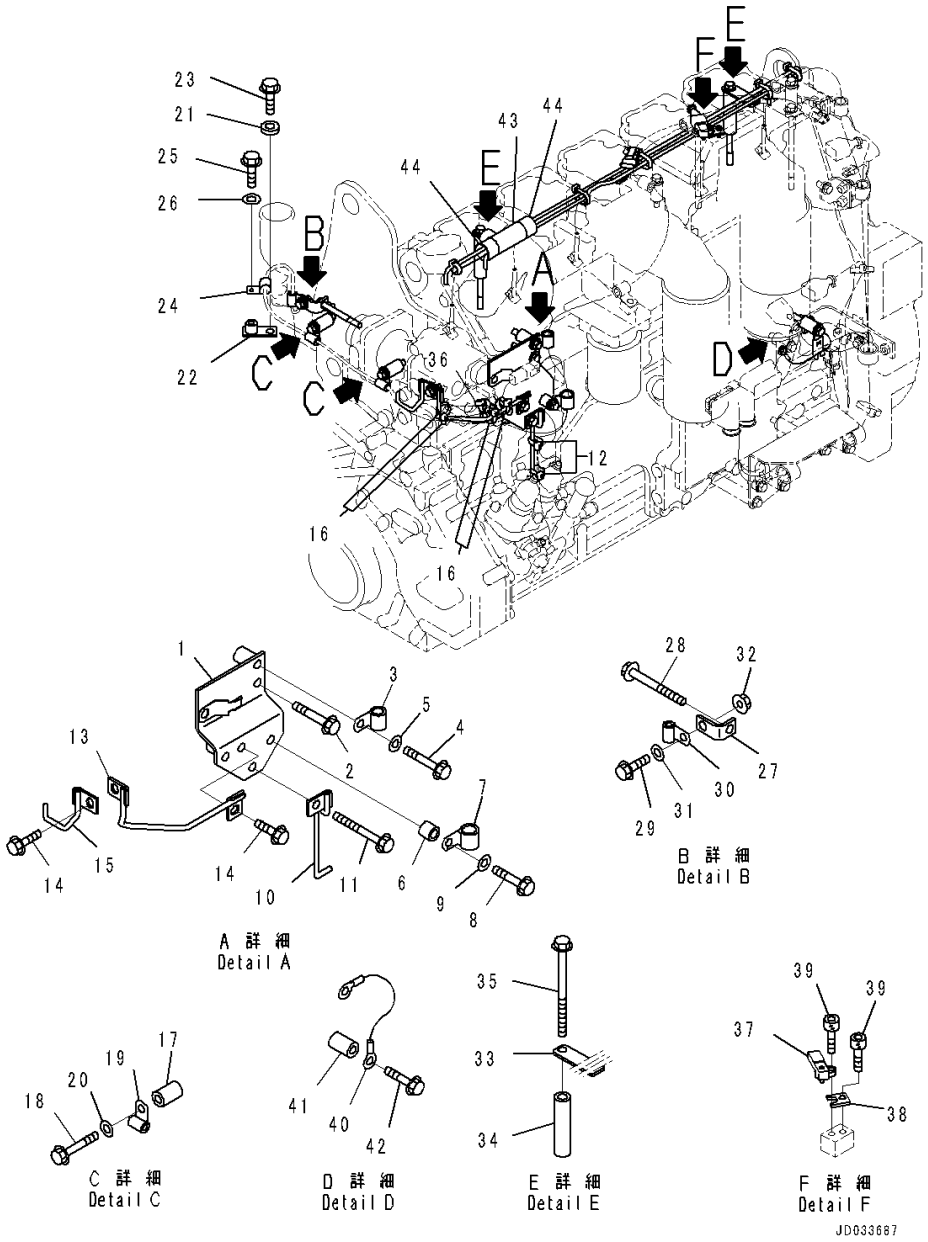

Index	Code	Part Number	Description	Qty	Serial Number
1		6251-81-9890	Bracket	1	567555-
2		01435-01050	Bolt	1	567555-
3		600-051-2140	Clip	1	567555-
4		01435-01055	Bolt	1	567555-
5		01643-31032	Washer	1	567555-
6		6631-11-5630	Spacer	1	567555-
7		600-051-2180	Clip	1	567555-
8		01435-01040	Bolt	1	567555-
9		01643-31032	Washer	1	567555-
10		6251-81-9820	Bracket	1	567555-
11		01435-01090	Bolt	1	567555-
12		6218-81-8490	Band	2	567555-
13		6251-81-9830	Bracket	1	567555-
14		01435-01020	Bolt	2	567555-
15		6251-81-9840	Bracket	1	567555-
16		6218-81-8490	Band	6	567555-
17		6144-11-5630	Spacer	2	567555-
18		01435-01050	Bolt	2	567555-
19		600-051-2080	Clip	2	567555-
20		01643-31032	Washer	2	567555-
21		209-62-11810	Spacer	1	567555-
22		426-06-11570	Bracket	1	567555-
23		01435-01035	Bolt	1	567555-
24		600-051-2080	Clip	1	567555-
25		01435-01016	Bolt	1	567555-
26		01643-31032	Washer	1	567555-
27		6212-65-8920	Stay	1	567555-
28		01435-01095	Bolt	1	567555-
29		01435-01020	Bolt	1	567555-
30		600-051-2080	Clip	1	567555-
31		01643-31032	Washer	1	567555-
32		01584-01008	Nut	1	567555-
33		6251-81-9720	Bracket	1	567555-
34		6215-71-6190	Spacer	2	567555-
35		01436-01065	Bolt	2	567555-
36		6218-81-8490	Band	8	567555-
37		6261-81-2600	Sensor, Ambient Pressure	1	567555-
38		6251-81-9680	Plate	1	567555-
39		01252-60516	Bolt	2	567555-
40		6245-81-5820	Wire	1	567555-

FIG. A6810-002002 Wiring Harness (Wiring Harness Support)

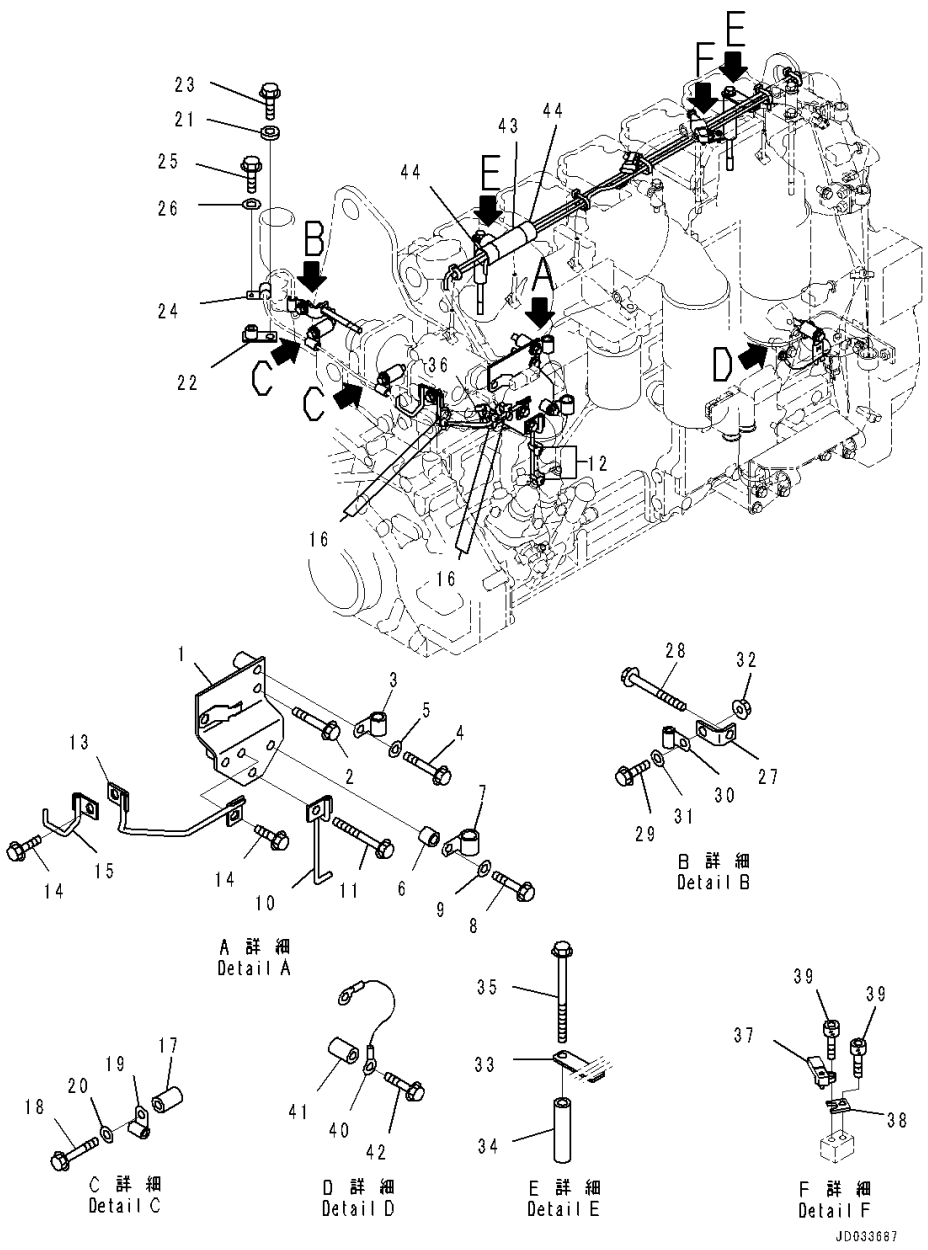

Index	Code	Part Number	Description	Qty	Serial Number
41		6144-11-5630	Spacer	1	567555-
42		01435-01050	Bolt	1	567555-
43		6251-81-9980	Cover	1	567555-
44		6251-81-9880	Tape	2	567555-

ENGINE ACCESSORIES AND OTHERS

FIG. A3330-001001 Water Drain Valve

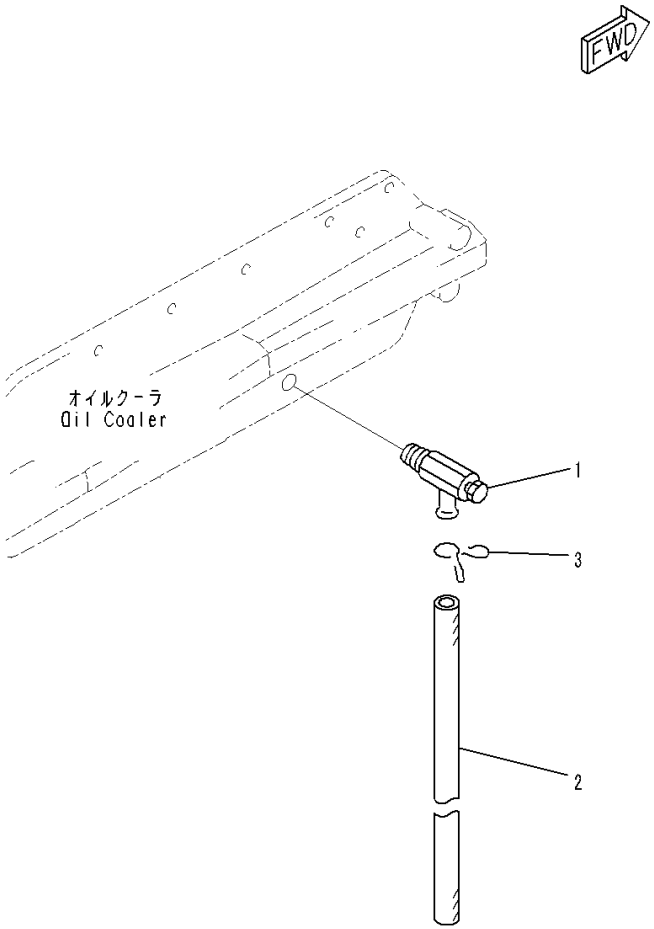

Index	Code	Part Number	Description	Qty	Serial Number
1		6140-61-6512	Valve, Drain	1	567555-
2		07286-00875	Hose	1	567555-
3		6144-61-6510	Clip	1	567555-

FIG. A4710-001001 Engine Controller

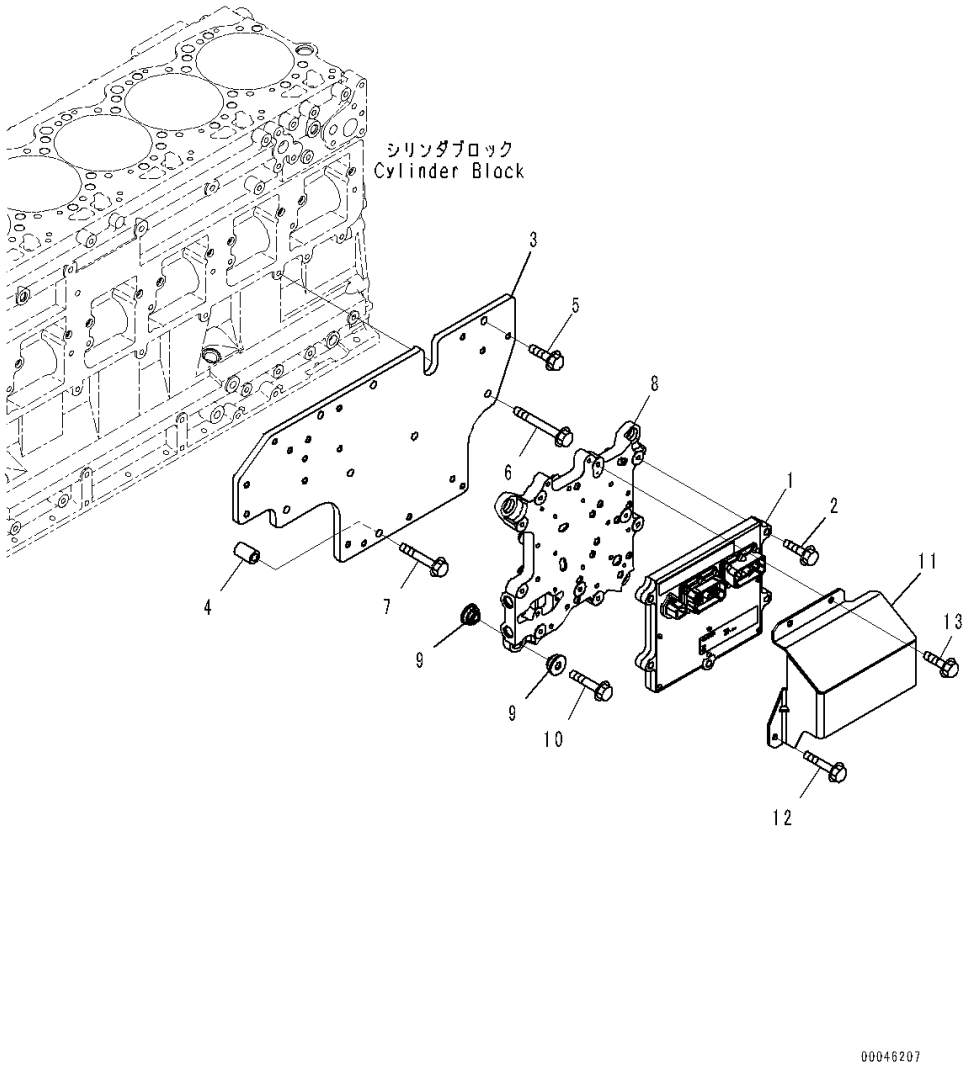

Index	Code	Part Number	Description	Qty	Serial Number
1		600-461-1400	Controller Assembly	1	567555-
2		01435-00840	Bolt	3	567555-
3		6251-21-6210	Bracket	1	567555-
4		6251-21-6220	Spacer	1	567555-
5		01435-01030	Bolt	3	567555-
6		01435-01085	Bolt	4	567555-
7		01435-01060	Bolt	1	567555-
8		6251-81-7110	Case	1	567555-
9		6251-81-7210	Cushion	8	567555-
10		01435-01050	Bolt	4	567555-
11		6261-81-7330	Cover	1	567555-
12		01435-00845	Bolt	2	567555-
13		01435-00820	Bolt	2	567555-

ENGINE MARKS AND PLATES

FIG. A9810-009001 Name Plate and Caution Plate (For EPA Regulations TPEM)

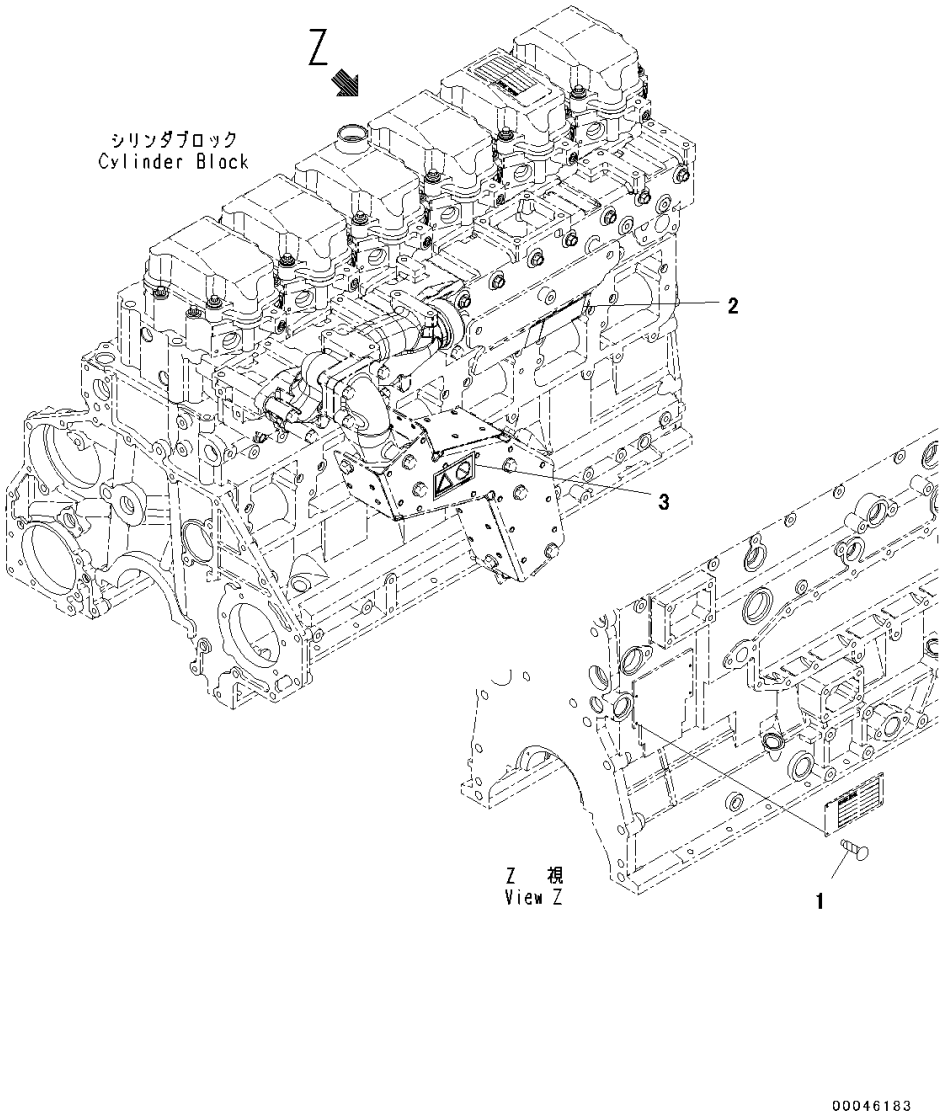

Index	Code	Part Number	Description	Qty	Serial Number
1		04418-02550	Screw	4	566858-
2		6217-71-9331	Plate, Warning	1	566858-
3		09817-K088B	Plate, Warning, High Temperature	1	566858-

FIG. A9810-011001 Name Plate and Caution Plate (For Canada Exhaust Gas TPEM)

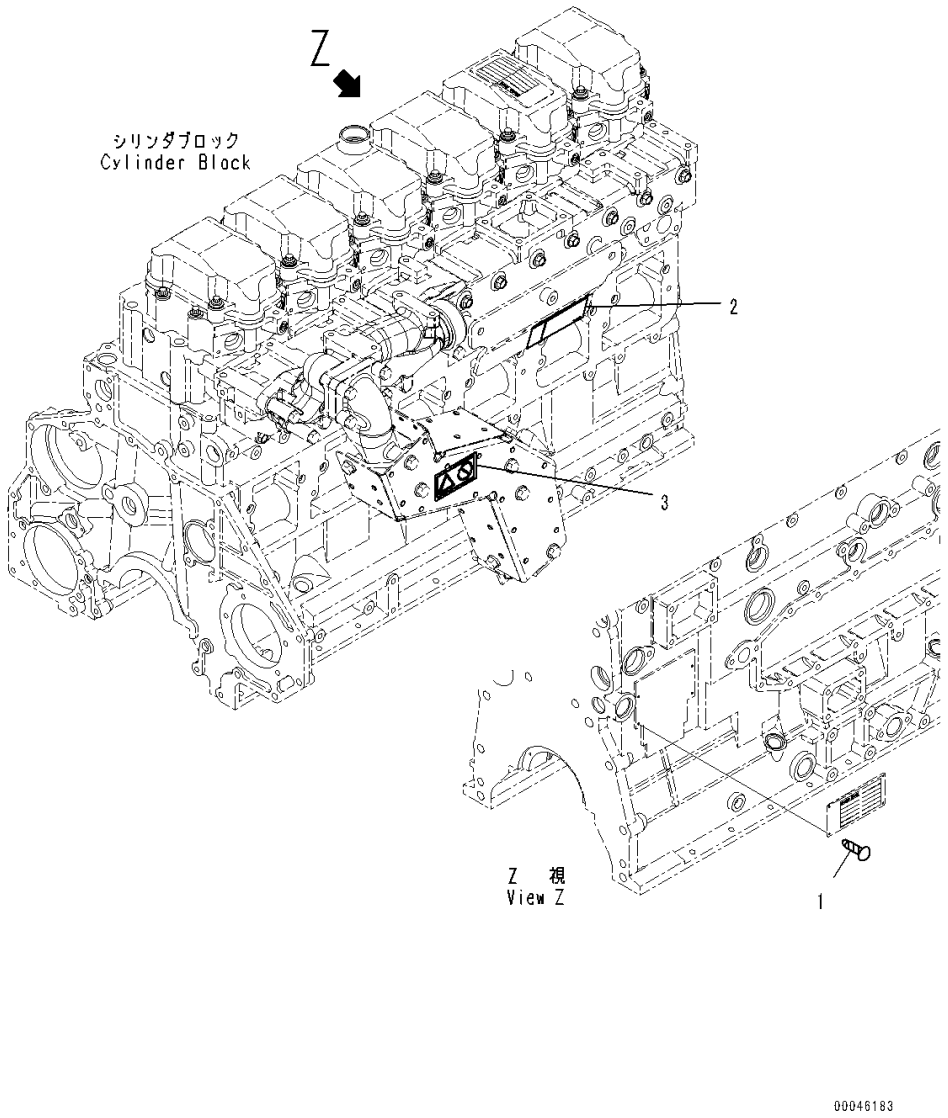

Index	Code	Part Number	Description	Qty	Serial Number
1		04418-02550	Screw	4	570790-
2		6217-71-9331	Plate, Warning	1	570790-
3		09817-K088B	Plate, Warning, High Temperature	1	570790-

FIG. A9810-013001 Name Plate and Caution Plate (For North America EPA 3rd Regulations)

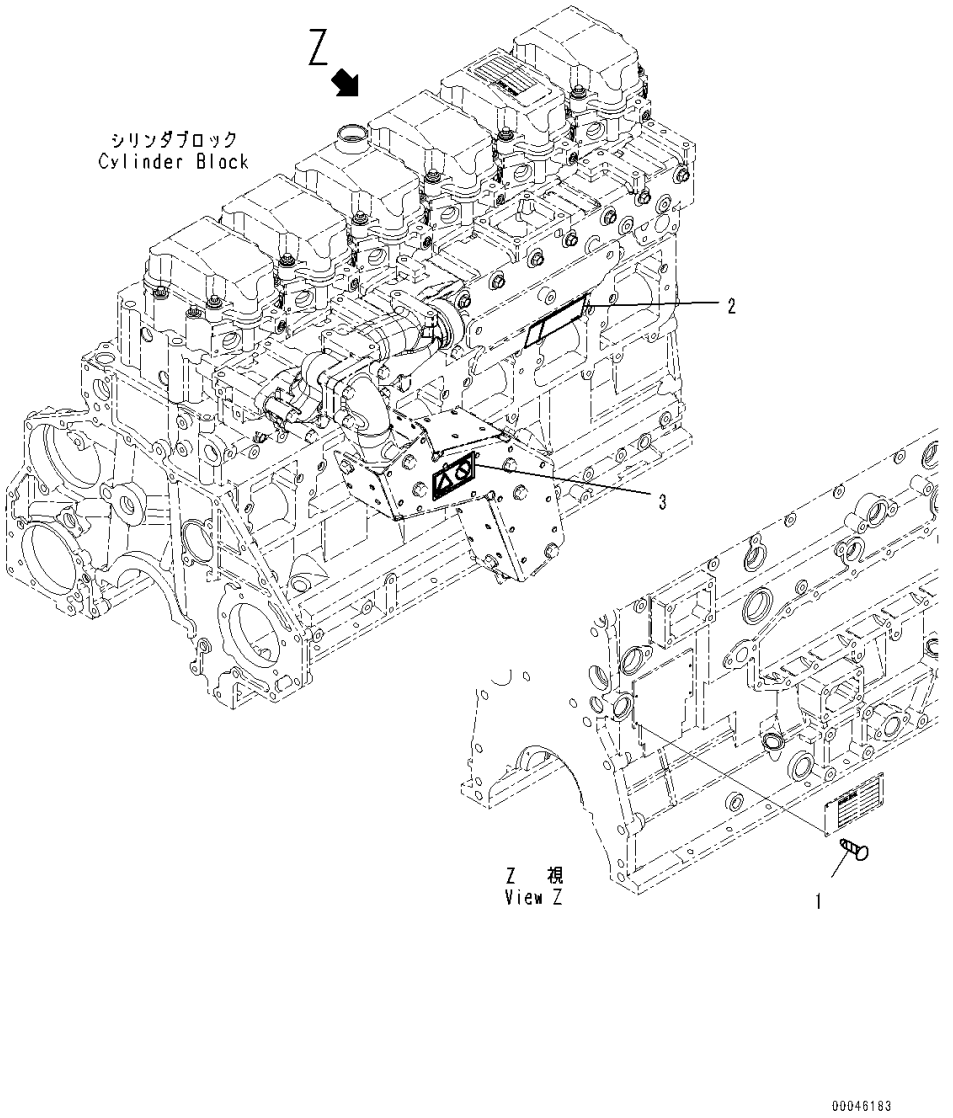

Index	Code	Part Number	Description	Qty	Serial Number
1		04418-02550	Screw	4	571880-
2		6217-71-9331	Plate, Warning	1	571880-
3		09817-K088B	Plate, Warning, High Temperature	1	571880-

FIG. A9810-001001 Name Plate and Warning Decal

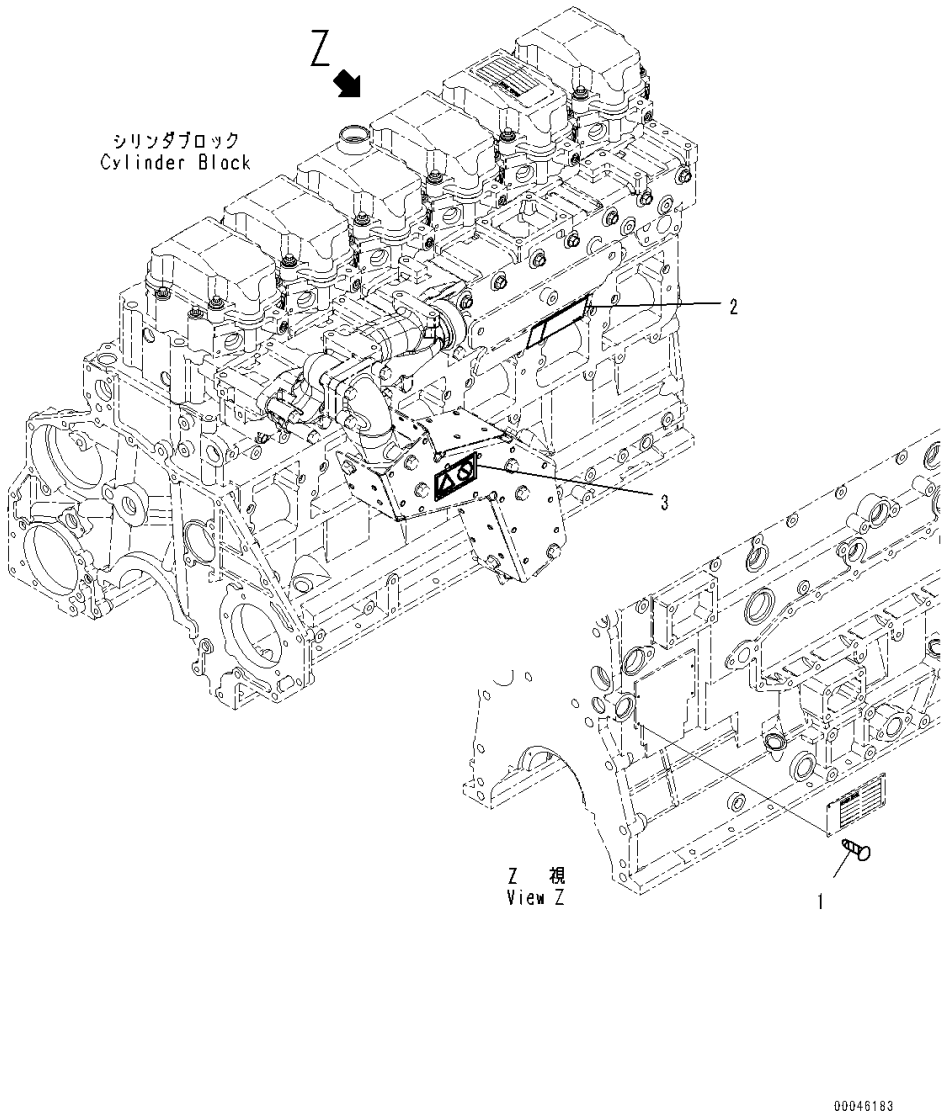

Index	Code	Part Number	Description	Qty	Serial Number
1		04418-02550	Screw	4	567555-
2		6217-71-9331	Plate, Warning	1	567555-
3		09817-K088B	Plate, Warning, High Temperature	1	567555-

FIG. A9810-004001 Name Plate and Warning Decal (For EU Safety Regulation)

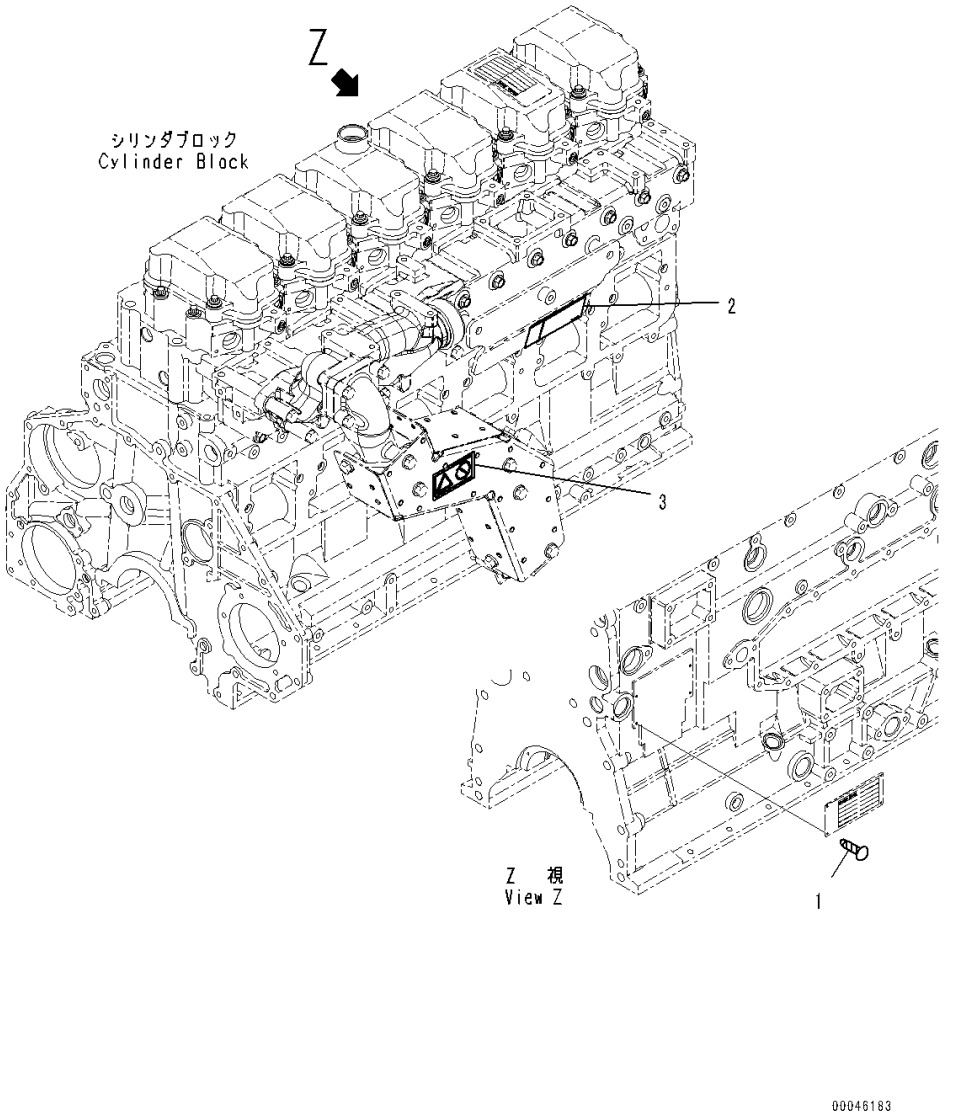

Index	Code	Part Number	Description	Qty	Serial Number
1		04418-02550	Screw	4	567555-
2		6271-81-2980	Plate, Caution	1	567555-
3		09817-K088B	Plate, Warning, High Temperature	1	567555-

FIG. A9810-006001 Name Plate and Warning Decal (For Except Japan)

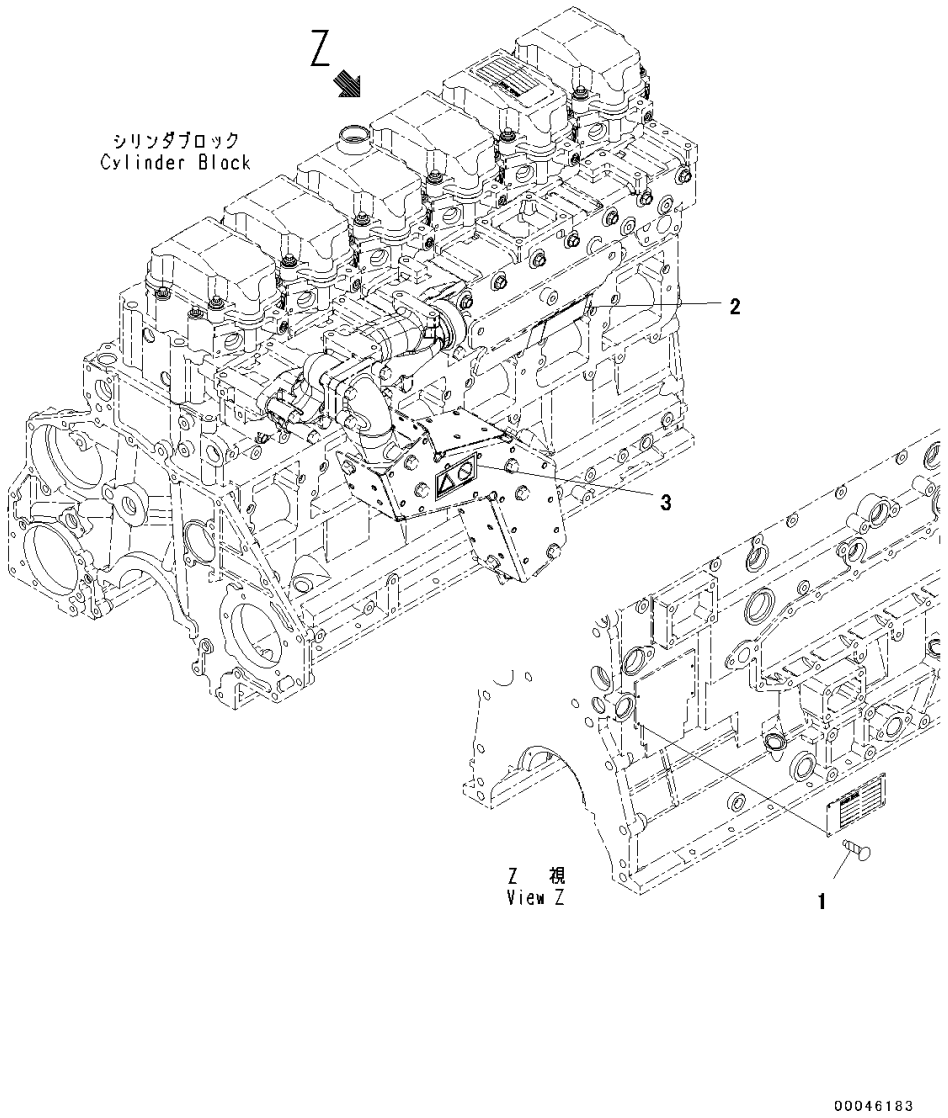

Index	Code	Part Number	Description	Qty	Serial Number
1		04418-02550	Screw	4	568860-
2		6217-71-9331	Plate, Warning	1	568860-
3		09817-K088B	Plate, Warning, High Temperature	1	568860-

FIG. A9810-007001 Name Plate and Warning Decal (For EU Safety Regulation)

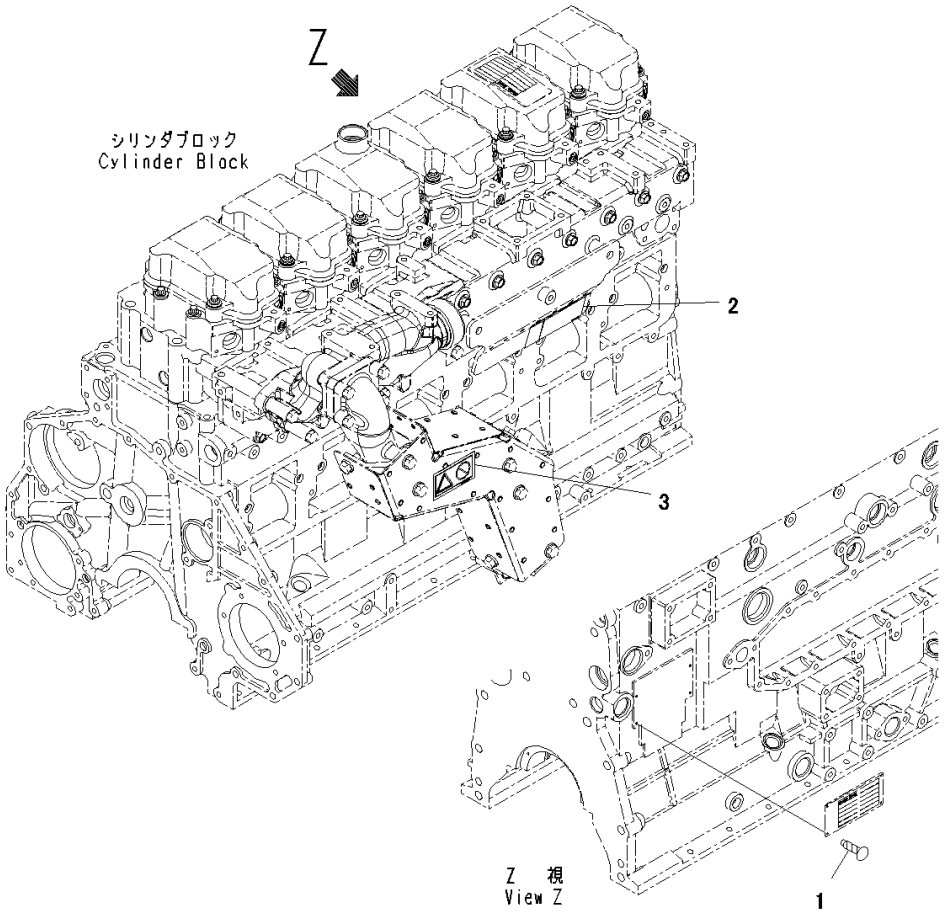

Index	Code	Part Number	Description	Qty	Serial Number
1		04418-02550	Screw	4	568860-
2		6271-81-2980	Plate, Caution	1	568860-
3		09817-K088B	Plate, Warning, High Temperature	1	568860-

FIG. A9810-014001 Name Plate and Warning Decal

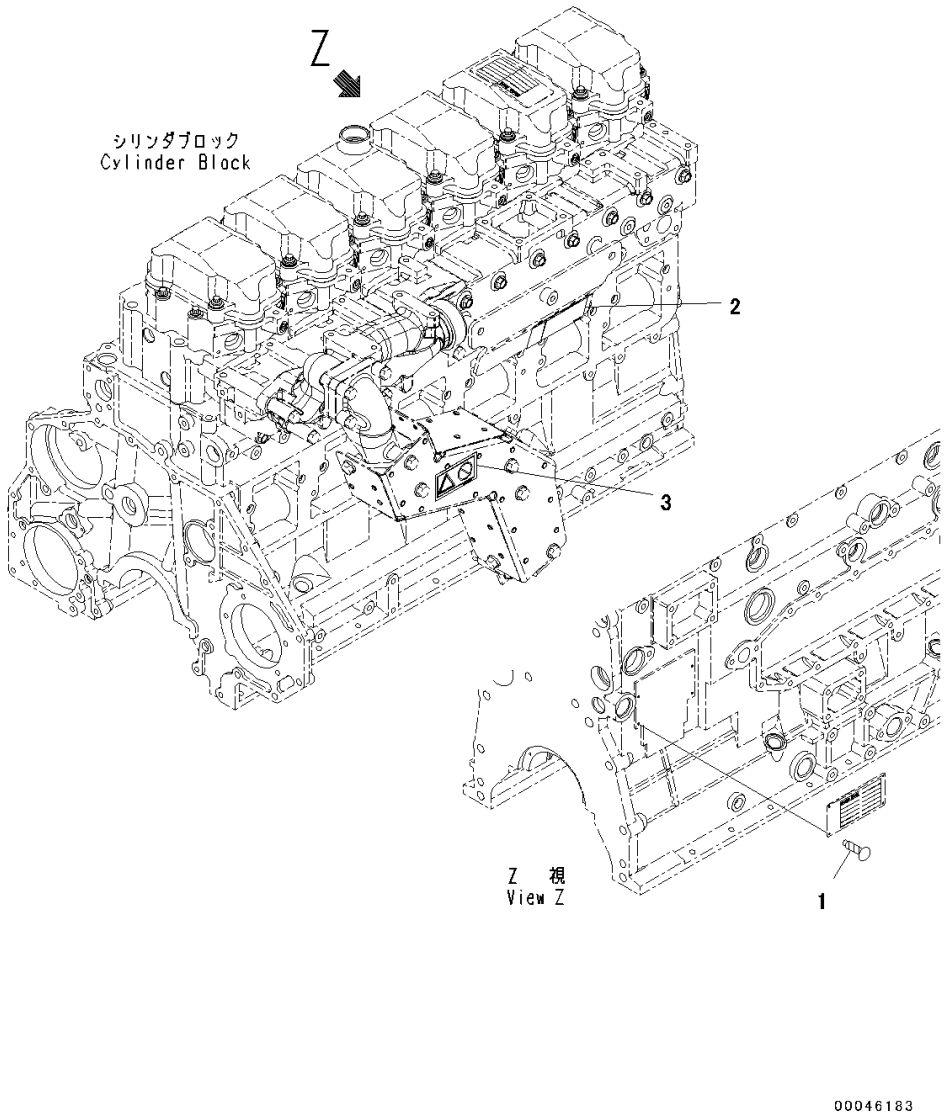

Index	Code	Part Number	Description	Qty	Serial Number
1		04418-02550	Screw	4	573024-
2		6271-81-2980	Plate, Caution	1	573024-
3		09817-K088B	Plate, Warning, High Temperature	1	573024-

FIG. A9810-010001 Name Plate and Warning Decal (For EU Safety Regulation, Turkey Exhaust Emissions 3rd Regulations)

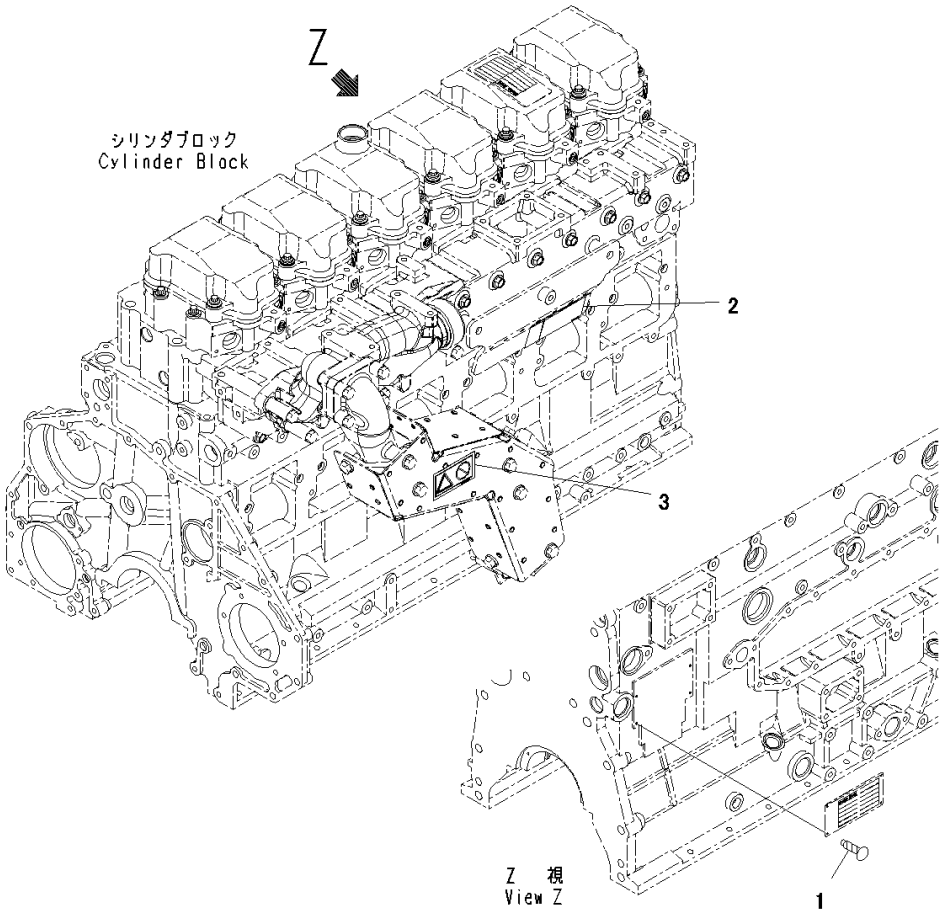

Index	Code	Part Number	Description	Qty	Serial Number
1		04418-02550	Screw	4	569208-
2		6271-81-2980	Plate, Caution	1	569208-
3		09817-K088B	Plate, Warning, High Temperature	1	569208-

ENGINE RELATED PARTS

FIG. B0100-001001 Engine Mounting

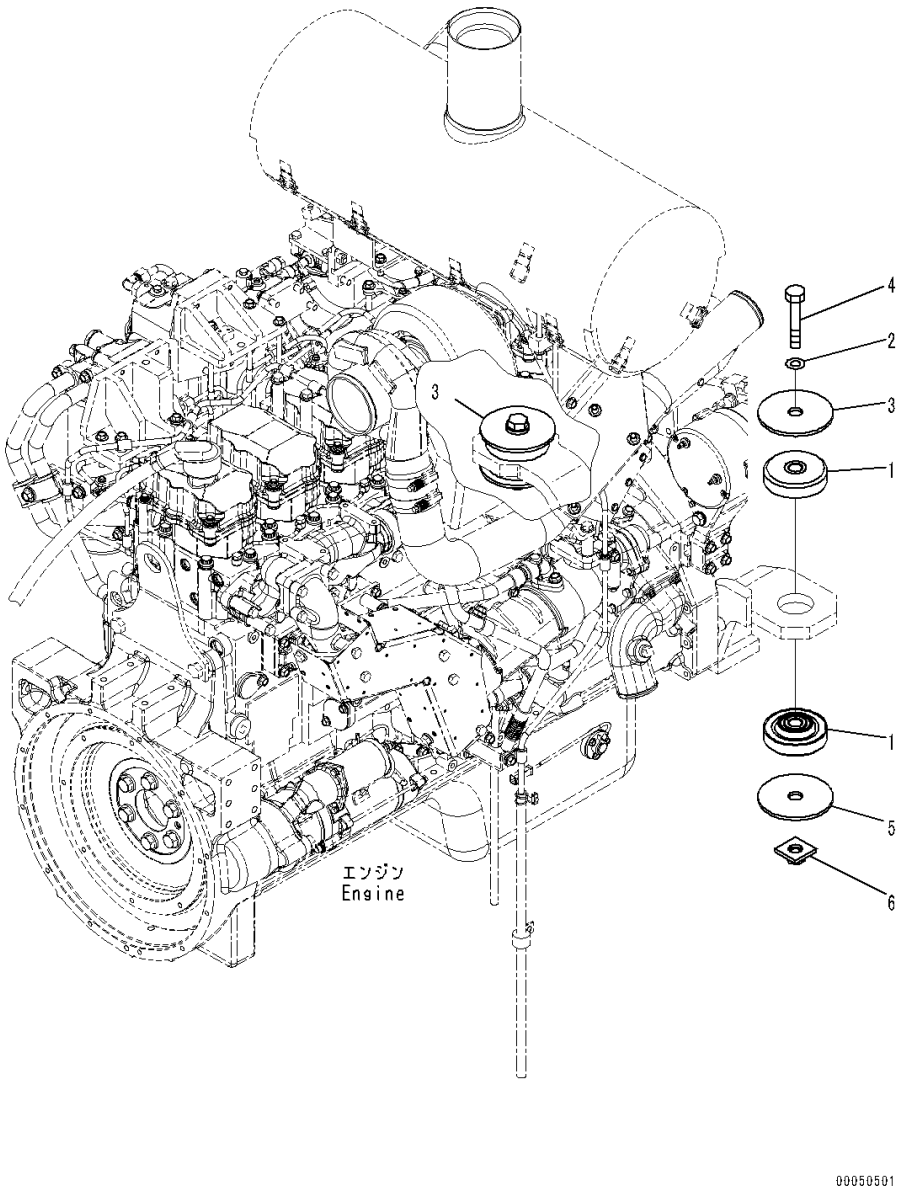

Index	Code	Part Number	Description	Qty	Serial Number
1		421-01-41140	Cushion	4	90216-
2		01643-32060	Washer	2	90216-
3		424-01-11220	Washer	2	90216-
4		01011-62030	Bolt	2	90216-
5		424-01-11220	Washer	2	90216-
6		421-01-41550	Bracket	2	90216-

FIG. B0110-006001 Engine Wiring Harness (Wiring Harness Mounting, Engine) (1/2)

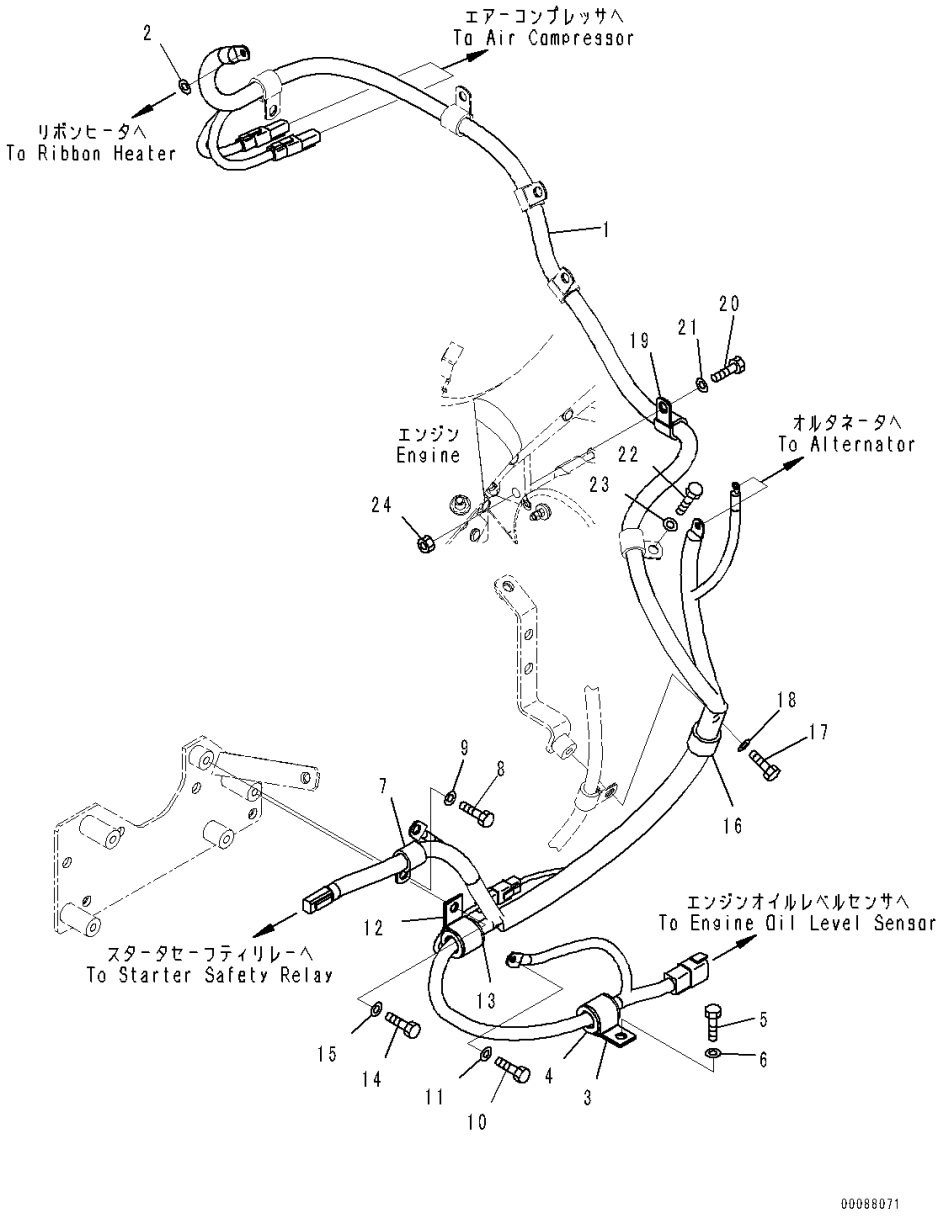

Index	Code	Part Number	Description	Qty	Serial Number
		Note: This list covers following specifications.			
		Without KOMTRAX			
		With 50Amp. Alternator, KOMTRAX			
1		421-06-42172	Wiring Harness	1	90216-
2		01640-20610	Washer	1	90216-
3		04434-52711	Clip	1	90216-
4		07095-20418	Cushion	1	90216-
5		01010-81020	Bolt	1	90216-
6		01643-31032	Washer	1	90216-
7		600-051-2180	Clip	1	90216-
8		01010-81016	Bolt	1	90216-
9		01643-31032	Washer	1	90216-
10		01010-81025	Bolt	1	90216-
11		01643-31032	Washer	1	90216-
12		04434-52711	Clip	1	90216-
13		07095-20418	Cushion	1	90216-
14		01010-81025	Bolt	1	90216-
15		01643-31032	Washer	1	90216-
16		600-051-2240	Clip	1	90216-
17		01010-81025	Bolt	1	90216-
18		01643-31032	Washer	1	90216-
19		600-051-2180	Clip	6	90216-
20		01010-81025	Bolt	4	90216-
21		01643-31032	Washer	4	90216-
22		01010-81020	Bolt	1	90216-
23		01643-31032	Washer	1	90216-
24		01580-11008	Nut	1	90216-

FIG. B0110-006002 Engine Wiring Harness (Wiring Harness Mounting, Engine) (2/2)

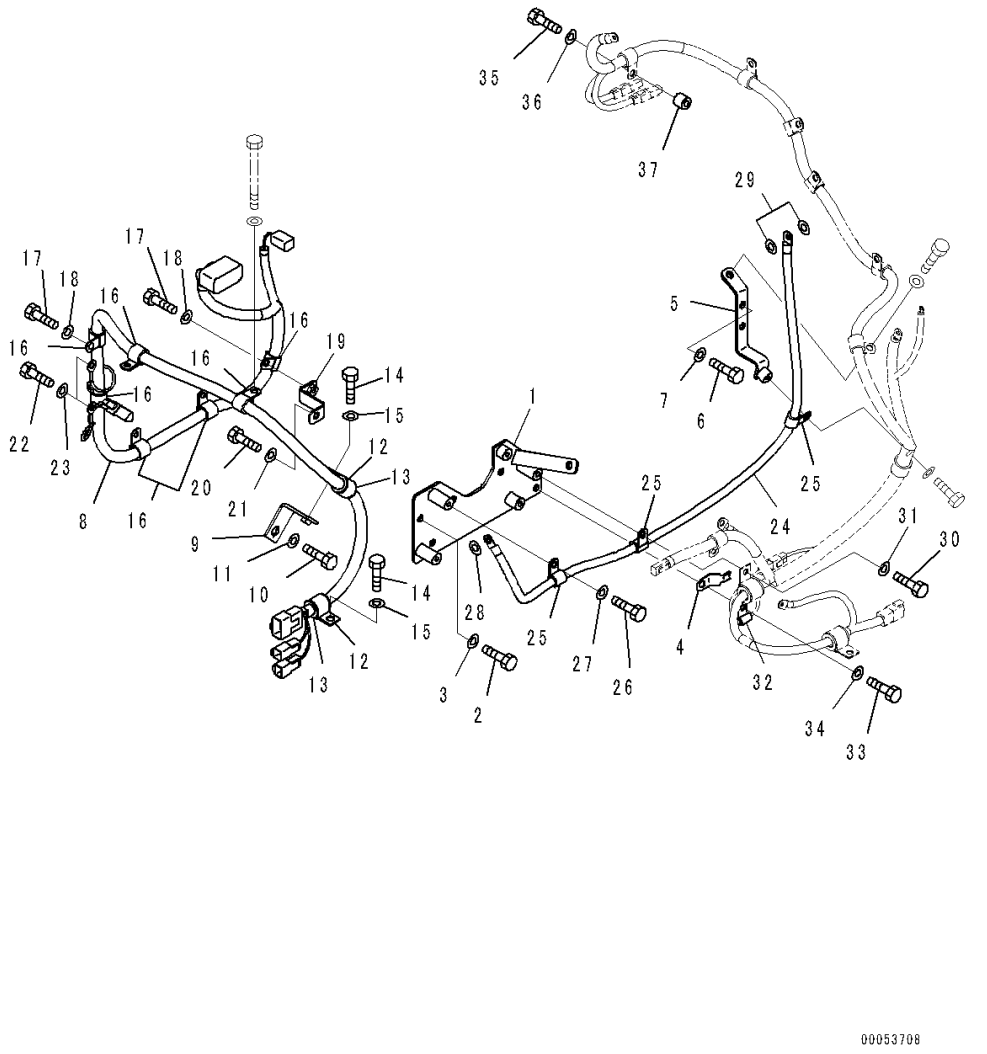

Index	Code	Part Number	Description	Qty	Serial Number
		Note: This list covers following specifications.			
		Without KOMTRAX			
		With 50Amp. Alternator, KOMTRAX			
1		421-06-42211	Bracket	1	90216-
2		01010-81025	Bolt	3	90216-
3		01643-31032	Washer	3	90216-
4		08193-21012	Clip	1	90216-
5		421-06-42221	Bracket	1	90216-
6		01010-81025	Bolt	2	90216-
7		01643-31032	Washer	2	90216-
8		421-06-42281	Wiring Harness	1	90216-
9		421-06-41350	Plate	1	90216-
10		01010-81430	Bolt	1	90216-
11		01643-31445	Washer, Flat	1	90216-
12		04434-52510	Clip	2	90216-
13		07095-20318	Cushion	2	90216-
14		01010-81020	Bolt	2	90216-
15		01643-31032	Washer	2	90216-
16		600-051-2200	Clip	7	90216-
17		01010-81020	Bolt	3	90216-
18		01643-31032	Washer	3	90216-
19		421-06-42240	Plate	1	90216-
20		01010-81020	Bolt	1	90216-
21		01643-31032	Washer	1	90216-
22		01010-81420	Bolt	2	90216-
23		01643-31445	Washer, Flat	2	90216-
24		421-06-42141	Wire	1	90216-
25		600-051-2140	Clip	3	90216-
26		01010-81020	Bolt	1	90216-
27		01643-31032	Washer	1	90216-
28		01643-31032	Washer	1	90216-
29		22W-70-16120	Washer	2	90216-
30		01010-81025	Bolt	1	90216-
31		01643-31032	Washer	1	90216-
32		600-051-2060	Clip	1	90216-
33		01010-81020	Bolt	1	90216-
34		01643-31032	Washer	1	90216-
35		01010-81040	Bolt	1	90216-
36		01643-31032	Washer	1	90216-
37		175-79-83760	Spacer	1	90216-

FIG. B0110-006003 Engine Wiring Harness (Air Cleaner Assembly)

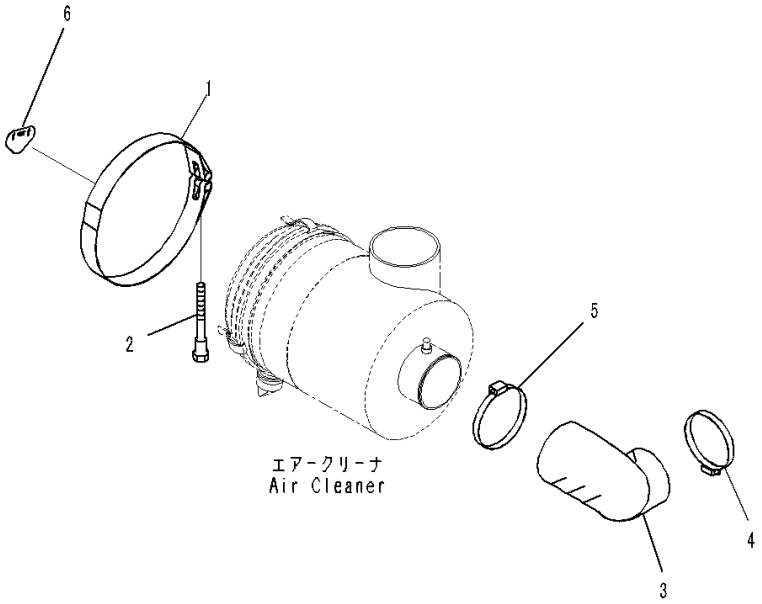

Index	Code	Part Number	Description	Qty	Serial Number
		Note: This list covers following specifications.			
		Without KOMTRAX			
		With 50Amp. Alternator, KOMTRAX			
		With 75Amp. Alternator, KOMTRAX			
1		6151-11-4840	Band	1	90216-
2		6643-11-4641	Bolt	1	90216-
3		421-01-41610	Hose	1	90216-
4		07289-00130	Clamp, Hose	1	90216-
5		07289-00145	Clamp	1	90216-
6		421-93-41020	Plate	1	90216-

FIG. B0110-006004 Engine Wiring Harness (Mounting)

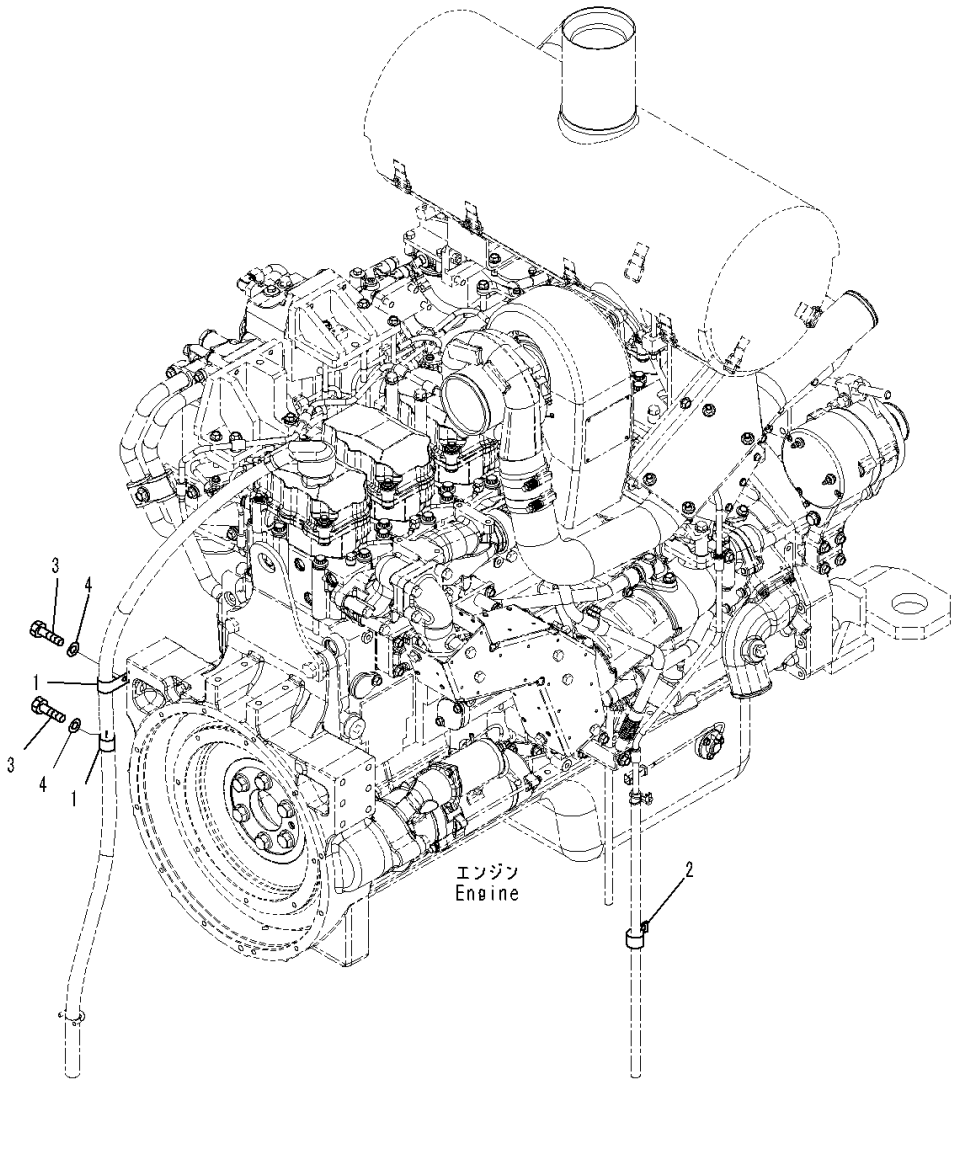

Index	Code	Part Number	Description	Qty	Serial Number
		Note: This list covers following specifications.			
		Without KOMTRAX			
		With 50Amp. Alternator, KOMTRAX			
		With 75Amp. Alternator, KOMTRAX			
1		04434-52310	Clip	2	90216-
2		04434-52511	Clip	1	90216-
3		01010-81016	Bolt	2	90216-
4		01643-31032	Washer	2	90216-

FIG. B0110-005004 Engine Wiring Harness (Dust Indicator)

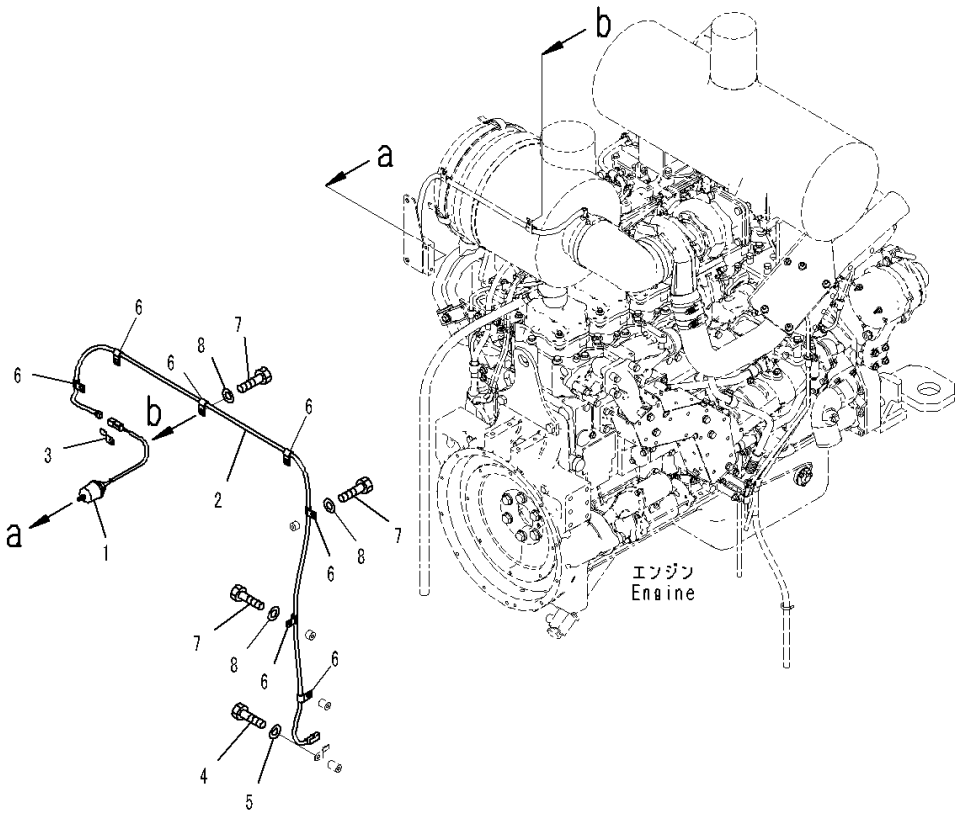

Index	Code	Part Number	Description	Qty	Serial Number
		Note: This list covers following specifications.			
		With 50Amp. Alternator, KOMTRAX			
		With 75Amp. Alternator, KOMTRAX			
1		600-815-8860	Indicator, Dust	1	90216-
2		421-06-41310	Wiring Harness	1	90216-
3		08193-20010	Clip	1	90216-
4		01010-81016	Bolt	1	90216-
5		01643-31032	Washer	1	90216-
6		04434-51010	Clip	7	90216-
7		01010-81016	Bolt	4	90216-
8		01643-31032	Washer	4	90216-

FIG. B0110-007001 Engine Wiring Harness (With 75Amp. Alternator, KOMTRAX) (Wiring Harness Mounting, Engine) (1/2)

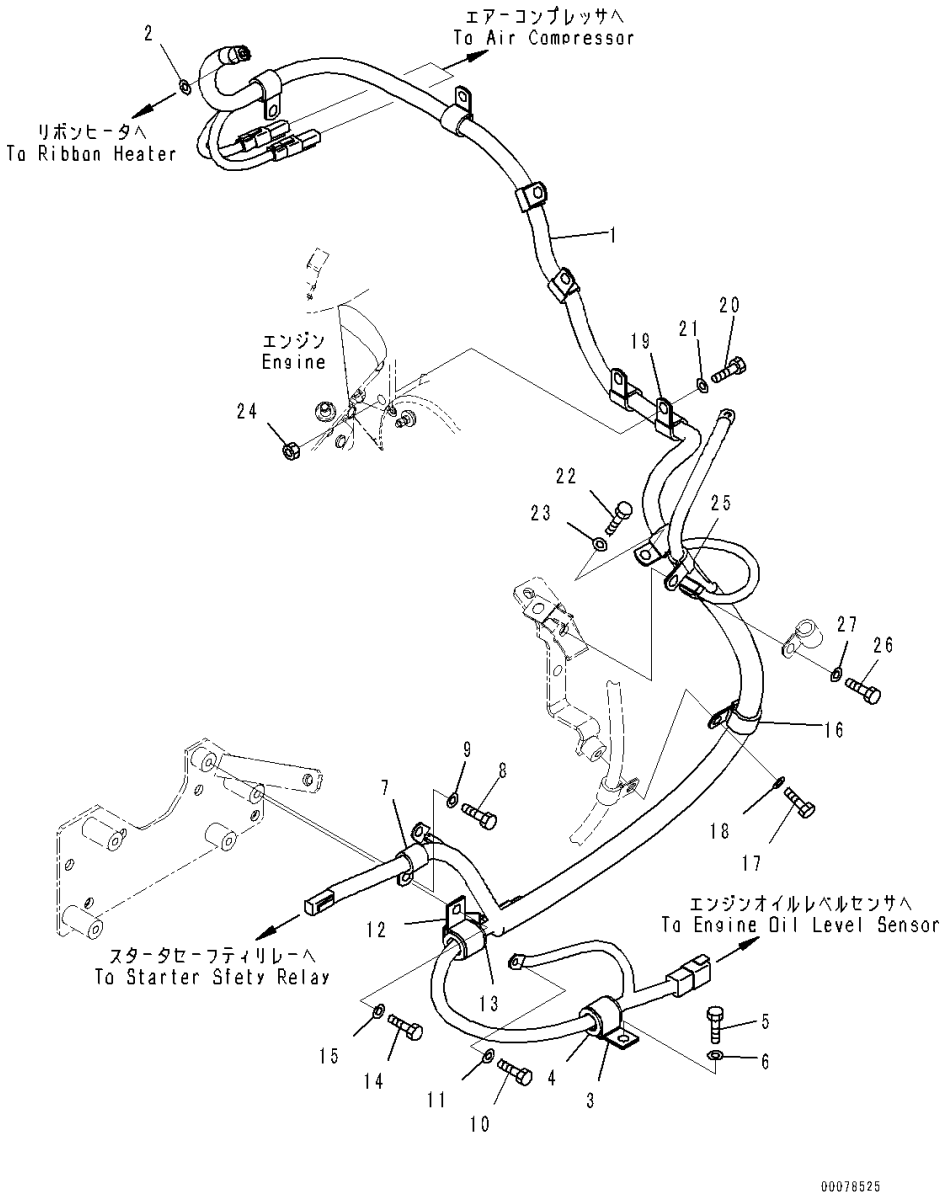

Index	Code	Part Number	Description	Qty	Serial Number
1		421-06-43151	Wiring Harness	1	90216-
2		01640-20610	Washer	1	90216-
3		04434-52711	Clip	1	90216-
4		07095-20418	Cushion	1	90216-
5		01010-81020	Bolt	1	90216-
6		01643-31032	Washer	1	90216-
7		600-051-2180	Clip	1	90216-
8		01010-81016	Bolt	1	90216-
9		01643-31032	Washer	1	90216-
10		01010-81025	Bolt	3	90216-
11		01643-31032	Washer	3	90216-
12		04434-52711	Clip	1	90216-
13		07095-20418	Cushion	1	90216-
14		01010-81025	Bolt	1	90216-
15		01643-31032	Washer	1	90216-
16		600-051-2240	Clip	1	90216-
17		01010-81025	Bolt	1	90216-
18		01643-31032	Washer	1	90216-
19		600-051-2180	Clip	7	90216-
20		01010-81025	Bolt	4	90216-
21		01643-31032	Washer	4	90216-
22		01010-81020	Bolt	1	90216-
23		01643-31032	Washer	1	90216-
24		01580-11008	Nut	1	90216-
25		600-051-2140	Clip	1	90216-
26		01010-81025	Bolt	1	90216-
27		01643-31032	Washer	1	90216-

FIG. B0110-007002 Engine Wiring Harness (With 75Amp. Alternator, KOMTRAX) (Wiring Harness Mounting, Engine) (2/2)

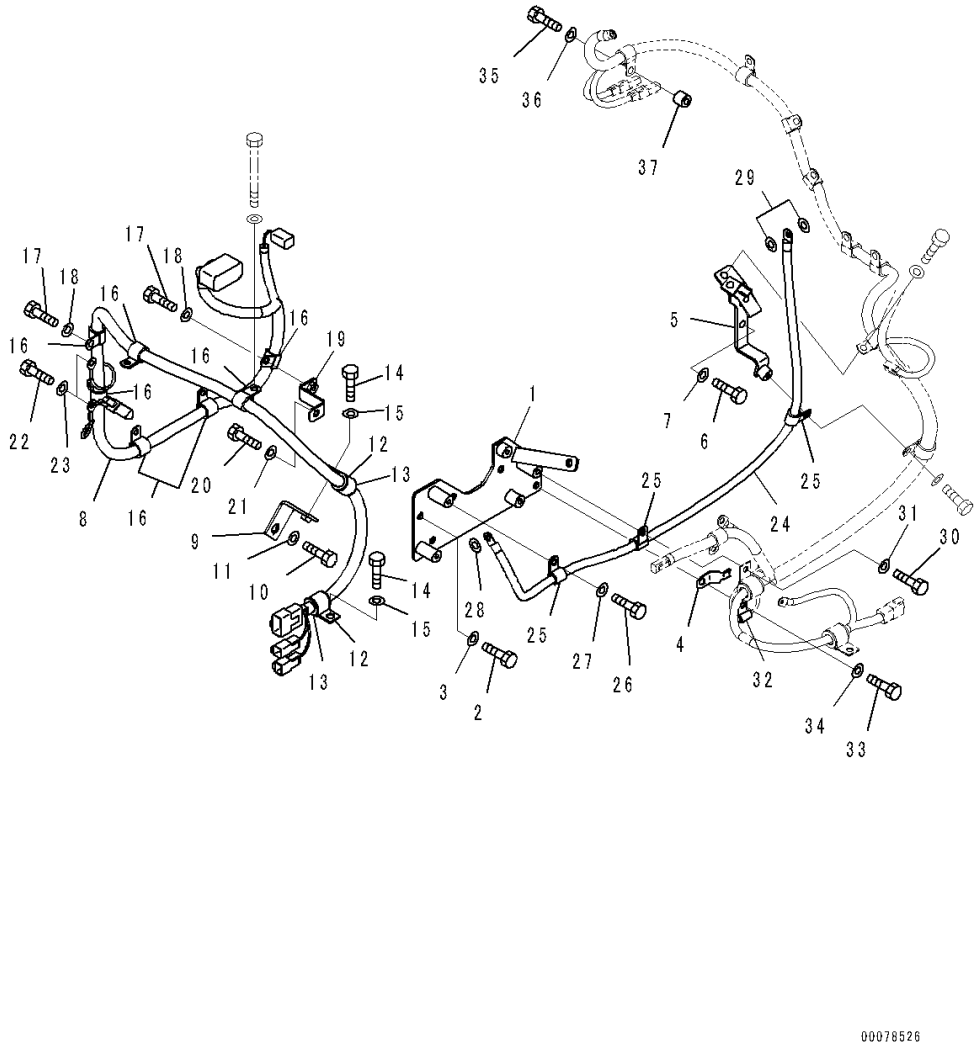

Index	Code	Part Number	Description	Qty	Serial Number
1		421-06-42211	Bracket	1	90216-
2		01010-81025	Bolt	3	90216-
3		01643-31032	Washer	3	90216-
4		08193-21012	Clip	1	90216-
5		421-06-43271	Bracket	1	90216-
6		01010-81025	Bolt	2	90216-
7		01643-31032	Washer	2	90216-
8		421-06-42281	Wiring Harness	1	90216-
9		421-06-41350	Plate	1	90216-
10		01010-81430	Bolt	1	90216-
11		01643-31445	Washer, Flat	1	90216-
12		04434-52510	Clip	2	90216-
13		07095-20318	Cushion	2	90216-
14		01010-81020	Bolt	2	90216-
15		01643-31032	Washer	2	90216-
16		600-051-2200	Clip	7	90216-
17		01010-81020	Bolt	3	90216-
18		01643-31032	Washer	3	90216-
19		421-06-42240	Plate	1	90216-
20		01010-81020	Bolt	1	90216-
21		01643-31032	Washer	1	90216-
22		01010-81420	Bolt	2	90216-
23		01643-31445	Washer, Flat	2	90216-
24		421-06-43141	Wire	1	90216-
25		600-051-2140	Clip	4	90216-
26		01010-81020	Bolt	1	90216-
27		01643-31032	Washer	1	90216-
28		01643-31032	Washer	1	90216-
29		22W-70-16120	Washer	2	90216-
30		01010-81025	Bolt	1	90216-
31		01643-31032	Washer	1	90216-
32		600-051-2060	Clip	1	90216-
33		01010-81020	Bolt	1	90216-
34		01643-31032	Washer	1	90216-
35		01010-81040	Bolt	1	90216-
36		01643-31032	Washer	1	90216-
37		175-79-83760	Spacer	1	90216-

FIG. B0300-002001 Exhaust Pipe

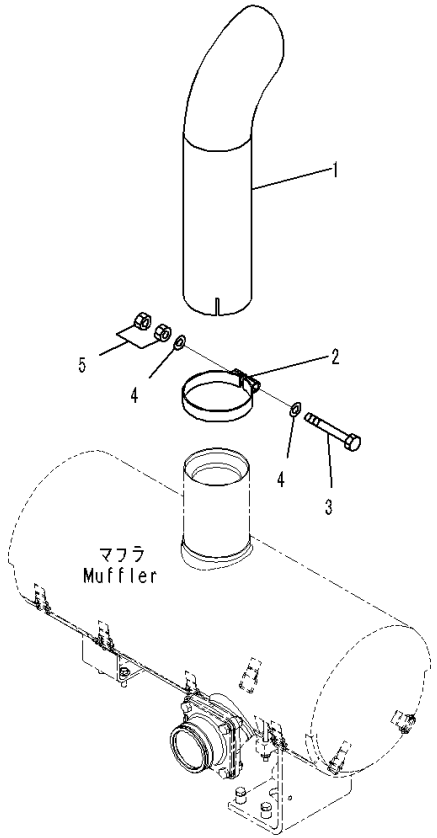

00050507

Index	Code	Part Number	Description	Qty	Serial Number
1		421-02-31114	Pipe	1	90216-
2		421-02-31120	Clamp	1	90216-
3		01010-81285	Bolt	1	90216-
4		01640-21223	Washer, Flat	2	90216-
5		01580-11210	Nut	2	90216-

COOLING SYSTEM

FIG. C0110-004001A Radiator (Radiator Core, Aftercooler and Oil Cooler)

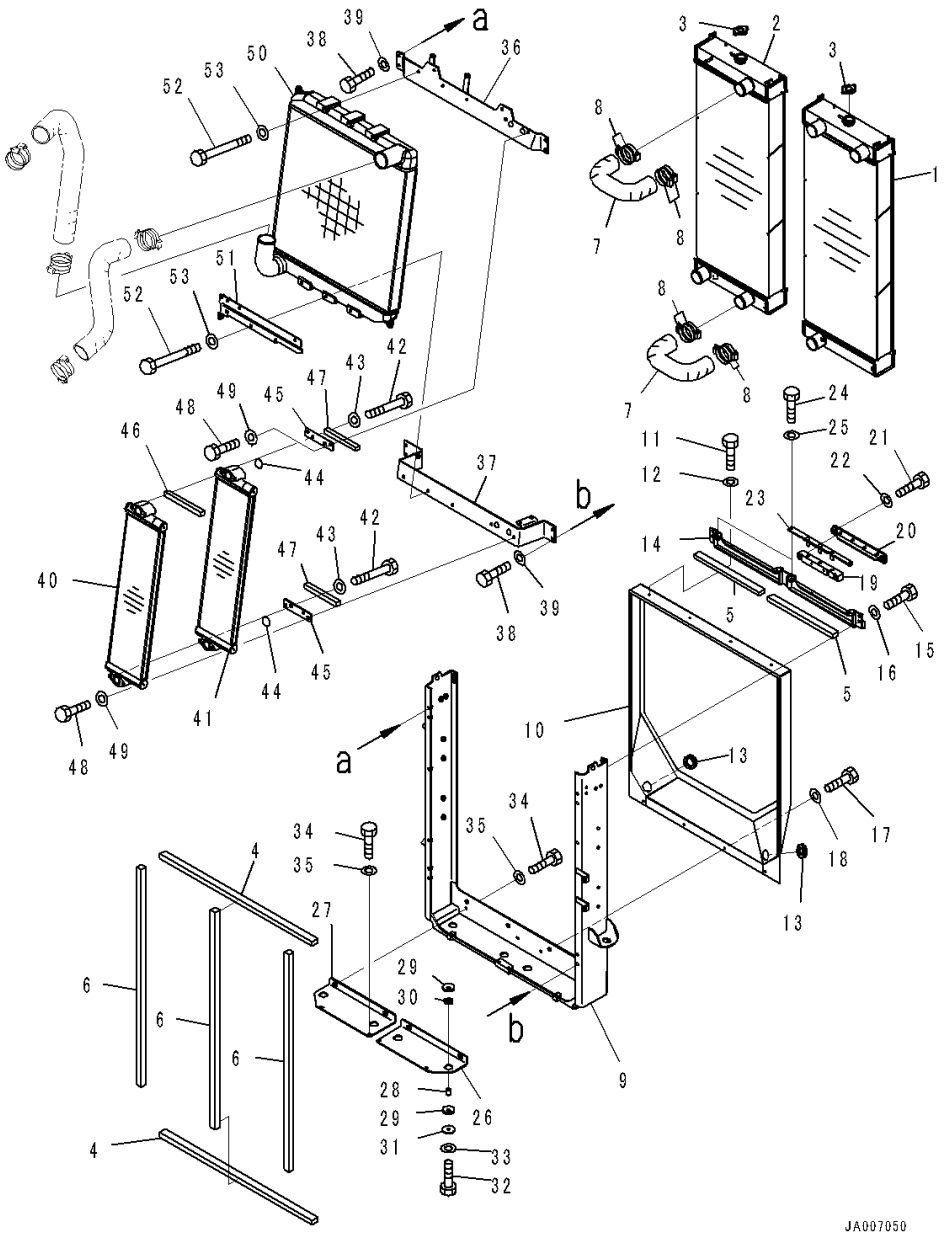

Index	Code	Part Number	Description	Qty	Serial Number
		421-03-41501	Radiator Assembly	1	90461-
1		421-03-44180	• Core	1	90461-
2		421-03-44190	• Core	1	90461-
3		416-03-11170	• Cap	2	90216-
4		421-03-41150	• Packing	2	90216-
5		421-03-41650	• Packing	2	90461-
6		421-03-41160	• Packing	3	90216-
7		421-03-44430	• Hose	2	90216-
8		07289-00070	• Clamp	8	90216-
9		421-03-41490	• Frame	1	90461-
10		421-03-41130	• Shroud	1	90216-
11		01010-80820	• Bolt	4	90216-
12		01643-30823	• Washer	4	90216-
13		09415-03614	• Cap	2	90216-
14		421-03-41560	• Bracket	1	90461-
15		01010-81025	• Bolt	4	90216-
16		01643-31032	• Washer	4	90216-
17		01010-80820	• Bolt	4	90216-
18		01643-30823	• Washer	4	90216-
19		423-03-41340	• Rubber	2	90461-
20		423-03-41350	• Bracket	2	90461-
21		01010-81035	• Bolt	4	90461-
22		01643-31032	• Washer	4	90461-
23		423-03-41390	• Plate	2	90461-
24		01010-81025	• Bolt	4	90461-
25		01643-31032	• Washer	4	90461-
26		421-03-41460	• Bracket	1	90461-
27		421-03-41470	• Bracket	1	90461-
28		22T-56-23290	• Spacer	4	90461-
29		423-03-41370	• Cushion	8	90461-
30		421-64-25130	• Cushion	4	90461-
31		11Y-03-32260	• Washer	4	90461-
32		01010-81050	• Bolt	4	90461-
33		01643-31032	• Washer	4	90461-
34		01010-81025	• Bolt	8	90461-
35		01643-31032	• Washer	8	90461-
36		421-03-41210	• Bracket	1	90216-
37		421-03-41220	• Bracket	1	90216-
38		01010-81025	• Bolt	8	90216-
39		01643-31032	• Washer	8	90216-

FIG. C0110-004001A Radiator (Radiator Core, Aftercooler and Oil Cooler)

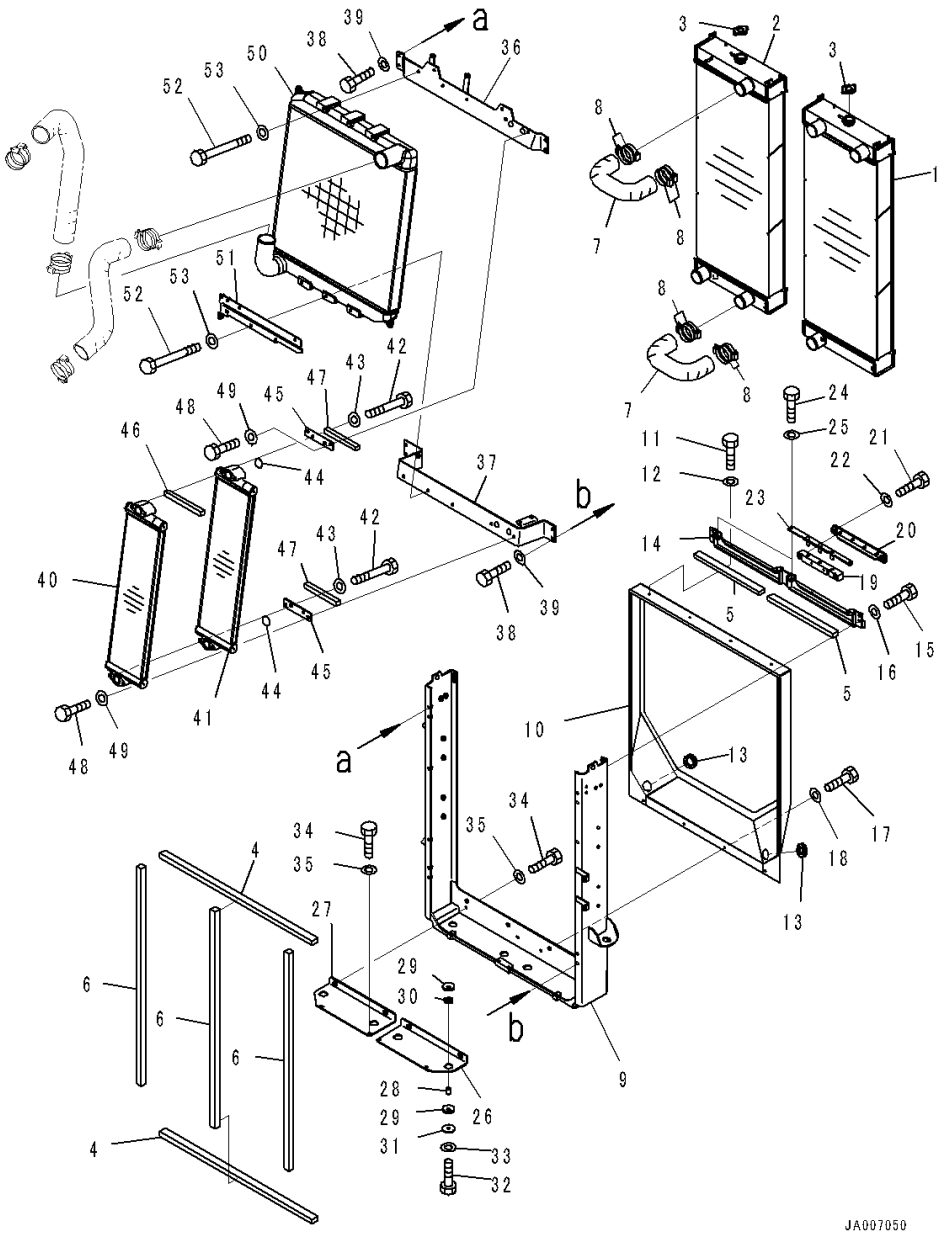

Index	Code	Part Number	Description	Qty	Serial Number
		421-03-44030	• Oil Cooler Assembly	1	90216-
40		421-03-44210	• • Oil Cooler	1	90216-
41		421-03-44220	• • Oil Cooler	1	90216-
42		01010-81080	• • Bolt	4	90216-
43		01643-31032	• • Washer	4	90216-
44		07000-13035	• • O-ring	2	90216-
45		421-03-44280	• • Plate	2	90216-
46		421-03-44230	• • Packing	1	90216-
47		421-03-41360	• • Packing	2	90216-
48		01010-81025	• Bolt	4	90216-
49		01643-31032	• Washer	4	90216-
50		421-03-44150	• Aftercooler	1	90216-
51		421-03-41260	• Bracket	1	90216-
52		01011-81015	• Bolt	6	90216-
53		01643-31032	• Washer	6	90216-

FIG. C0110-004002 Radiator (Mounting) (1/3)

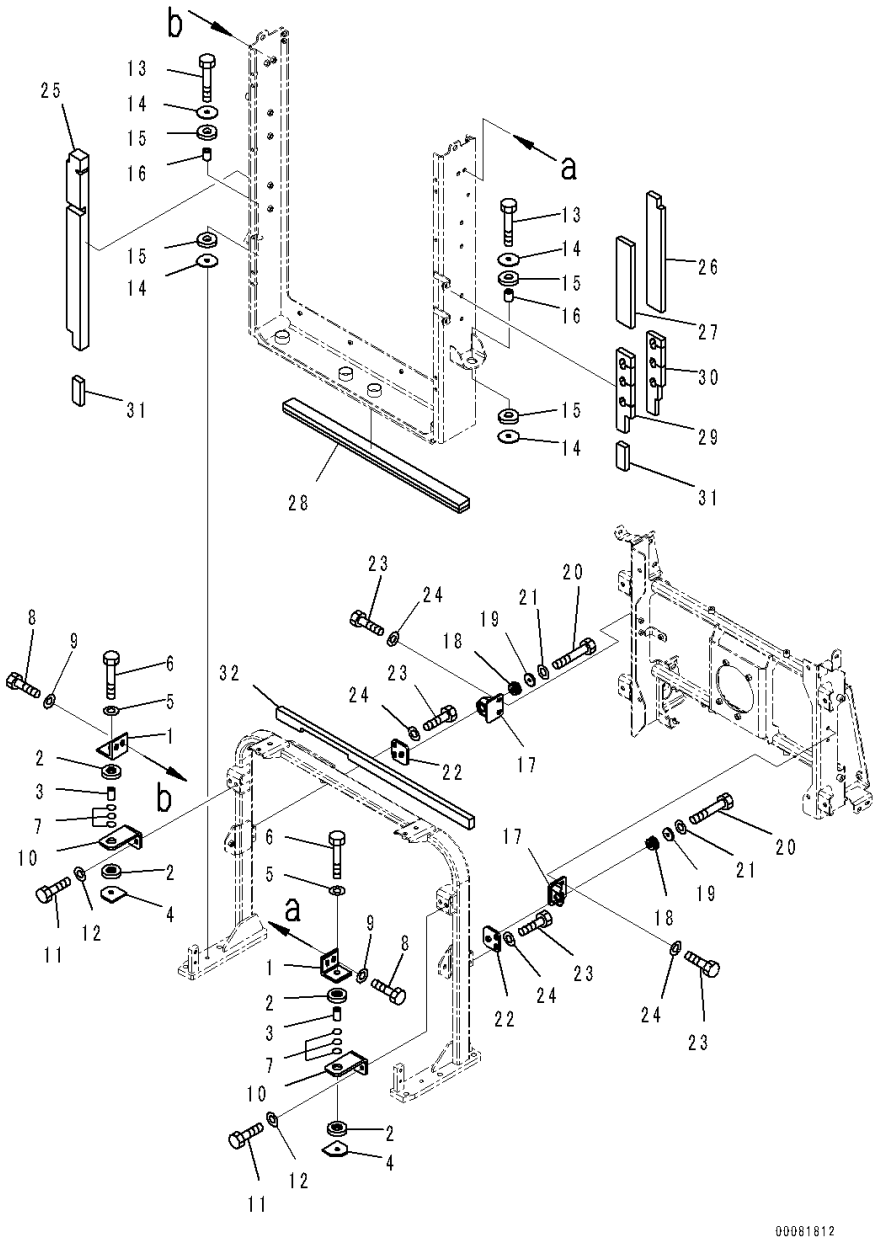

Index	Code	Part Number	Description	Qty	Serial Number
1		207-03-51230	Bracket	2	90216-
2		207-03-51380	Cushion	4	90216-
3		205-03-71330	Collar	2	90216-
4		207-03-51240	Bracket	2	90216-
5		01643-31232	Washer	2	90216-
6		01010-81270	Bolt	2	90216-
7		07000-13022	O-ring	6	90216-
8		01010-81230	Bolt	4	90216-
9		01643-31232	Washer	4	90216-
10		421-03-41230	Plate	2	90216-
11		01010-81230	Bolt	4	90216-
12		01643-31232	Washer	4	90216-
13		01010-81460	Bolt	2	90216-
14		421-03-31271	Washer	4	90216-
15		421-03-31260	Cushion	4	90216-
16		421-03-31281	Spacer	2	90216-
17		421-54-42260	Bracket	2	90216-
18		195-03-41380	Cushion	2	90216-
19		178-60-12250	Collar	2	90216-
20		01010-81050	Bolt	2	90216-
21		01643-31032	Washer	2	90216-
22		421-54-42270	Plate	2	90216-
23		01010-81025	Bolt	8	90216-
24		01643-31032	Washer	8	90216-
25		421-54-42530	Seal	1	90216-
26		421-54-45510	Sheet	1	90216-
27		421-54-45520	Sheet	1	90216-
28		421-54-42570	Sheet	1	90216-
29		421-54-42620	Sheet	1	90216-
30		421-54-42630	Sheet	1	90216-
31		421-54-42640	Sheet	2	90216-
32		421-54-43590	Sheet	1	90216-

FIG. C0110-004003 Radiator (Inner Parts, Fan Motor)

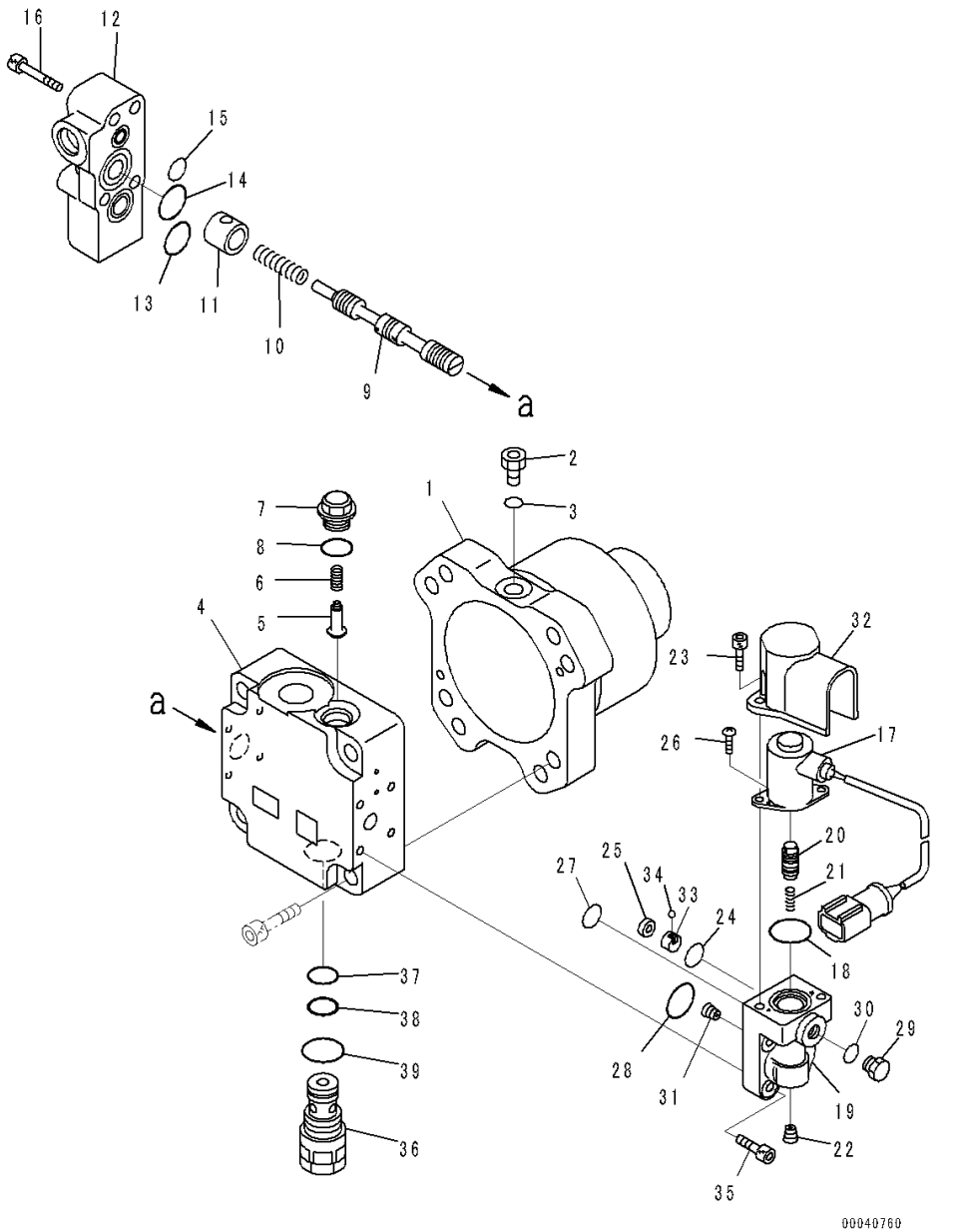

Index	Code	Part Number	Description	Qty	Serial Number
		708-7S-00550	Motor Assembly	1	90216-
1	C2	708-7S-11740	• Case	1	90216-
2		07040-11007	• Plug	1	90216-
3		07002-21023	• O-ring	1	90216-
	C2	708-7S-01430	• Cover Subassembly	1	90216-
4	C1		• • Cover, End	1	90216-
5	C2	708-7R-11210	• • Valve	1	90216-
6	C2	722-10-91130	• • Spring	1	90216-
7	C2	709-32-12861	• • Plug	1	90216-
8		07002-21823	• • O-ring	1	90216-
9	C1		• • Spool	1	90216-
10	C2	708-7S-18120	• • Spring	1	90216-
11	C2	708-7S-18310	• • Spacer	1	90216-
12	C2	708-7S-18320	• • Cover	1	90216-
13		07000-E2020	• • O-ring	1	90216-
14		07000-E2025	• • O-ring	1	90216-
15		07000-E2012	• • O-ring	1	90216-
16		01252-60845	• • Bolt, Hexagon Socket Head	4	90216-
	C2	708-7S-01440	• • Valve Assembly, Pilot	1	90216-
17	C2	702-21-56241	• • • Solenoid	1	90216-
18	C2	702-21-55870	• • • O-ring	1	90216-
19	C1		• • • Case	1	90216-
20	C1		• • • Spool	1	90216-
21	C2	702-21-56220	• • • Spring	1	90216-
22	C2	708-21-12541	• • • Plug	1	90216-
23		01252-60616	• • • Bolt, Hexagon Socket Head	2	90216-
24	C2	708-2L-25490	• • • O-ring	1	90216-
25	C2	708-2L-25480	• • • Filter	1	90216-
26	C2	702-21-54180	• • • Screw	2	90216-
27		07000-F1008	• • • O-ring	1	90216-
28	C2	708-7S-18230	• • • O-ring	1	90216-
29		07040-11007	• • • Plug	1	90216-
30		07002-21023	• • • O-ring	1	90216-
31		708-2L-29460	• • • Orifice	1	90216-
32	C2	708-1S-18180	• • • Cover	1	90216-
33		708-7S-18480	• • • Valve	1	90216-
34	C1		• • • Ball	1	90216-
35		01252-60825	• • Bolt, Hexagon Socket Head	4	90216-
36		708-7T-02281	• • Valve, Relief	1	90216-
37		07000-F2016	• • • O-ring	1	90216-

FIG. C0110-004003 Radiator (Inner Parts, Fan Motor)

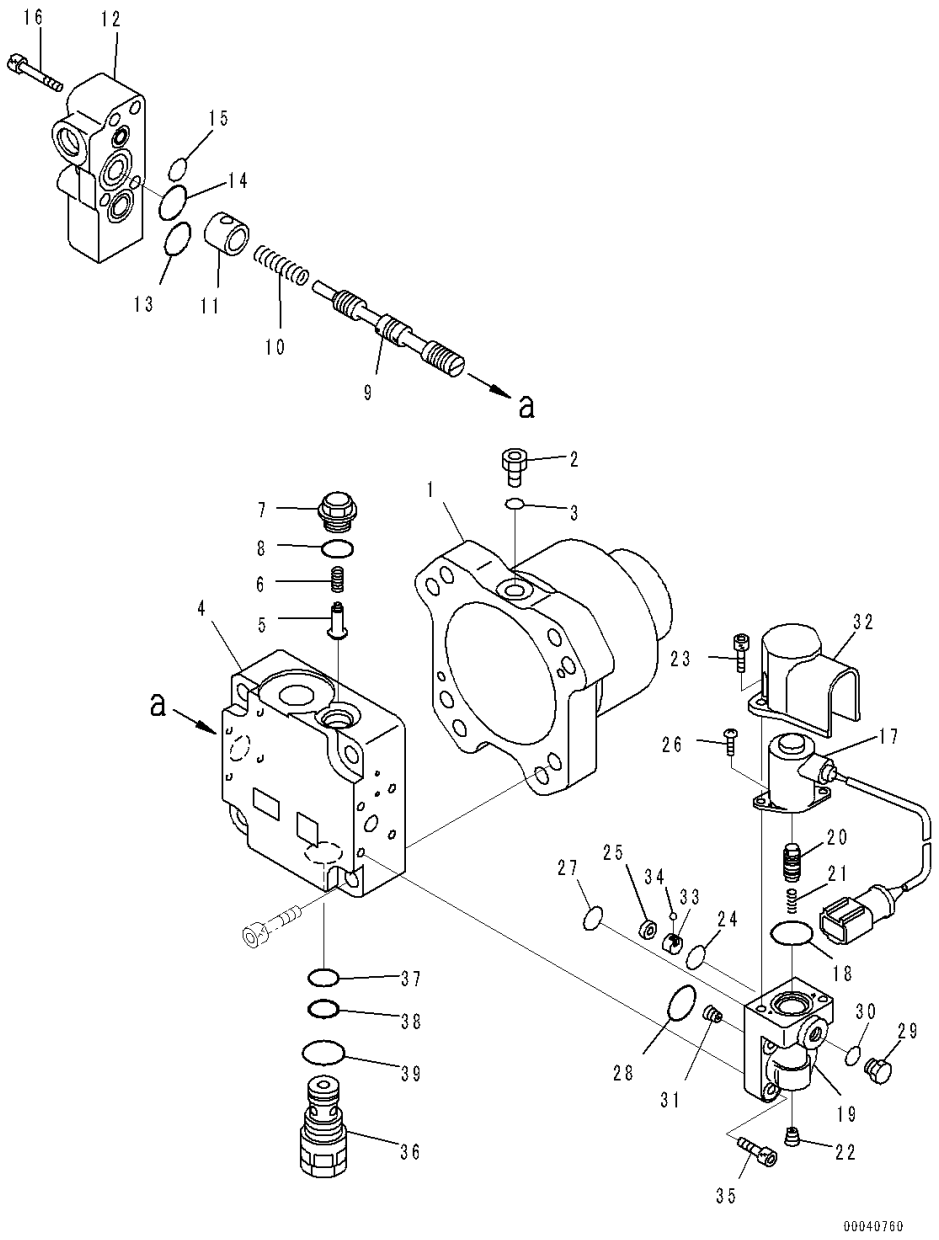

Index	Code	Part Number	Description	Qty	Serial Number
38		07001-02016	• • • Ring, Back-up	1	90216-
39		07002-12434	• • • O-ring	1	90216-

FIG. C0110-004004 Radiator (Fan Motor)

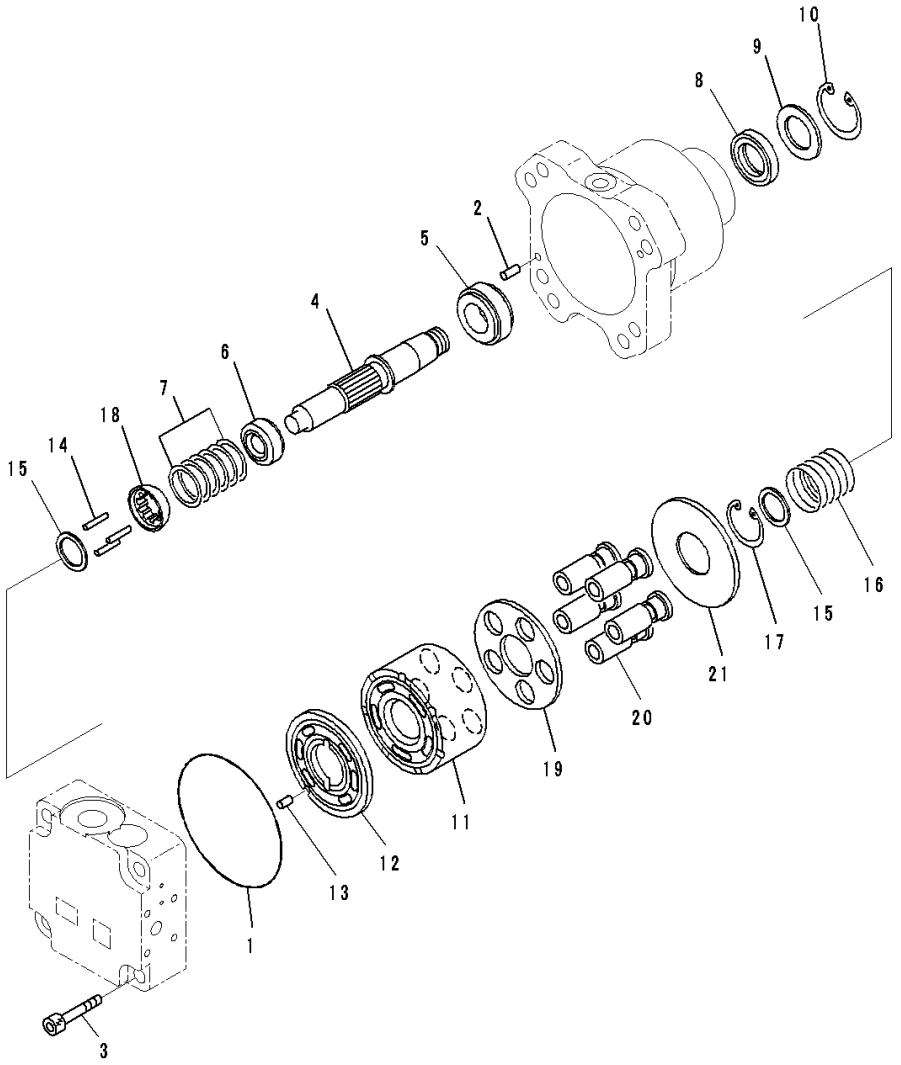

Index	Code	Part Number	Description	Qty	Serial Number
		708-7S-00550	Motor Assembly	1	90216-
1		07000-E2110	• O-ring	1	90216-
2		04020-00616	• Pin, Dowel	2	90216-
3		01252-61255	• Bolt, Hexagon Socket Head	4	90216-
4	C2	708-7S-12330	• Shaft	1	90216-
5	C2	708-7S-12140	• Bearing	1	90216-
6	C2	708-7S-12220	• Bearing	1	90216-
7	C2	708-7S-05110	• Shim Kit	1	90216-
	C1		• • Shim, T=0.85mm	1	90216-
	C1		• • Shim, T=1.05mm	1	90216-
	C1		• • Shim, T=1.25mm	1	90216-
	C1		• • Shim, T=0.75mm	1	90216-
	C1		• • Shim, T=0.95mm	1	90216-
	C1		• • Shim, T=1.15mm	1	90216-
8		708-7T-12330	• Seal, Oil	1	90216-
9		708-1S-11890	• Spacer	1	90216-
10		04065-04518	• Ring, Snap	1	90216-
11	C2	708-7S-13120	• Block	1	90216-
12	C2	708-7S-13260	• Plate, Valve	1	90216-
13	C2	720-68-19610	• Pin	1	90216-
14	C2	708-2L-23360	• Pin	3	90216-
15	C2	708-7S-13530	• Spacer	2	90216-
16	C2	708-7S-13560	• Spring	1	90216-
17		04065-03212	• Ring, Snap	1	90216-
18	C2	708-7S-13550	• Guide, Retainer	1	90216-
19	C2	708-7S-13360	• Retainer, Shoe, Show	1	90216-
20	C2	708-7S-13350	• Piston Subassembly	5	90216-
21	C2	708-7S-13420	• Plate, Thrust	1	90216-

FIG. C0110-004005 Radiator (Mounting) (2/3)

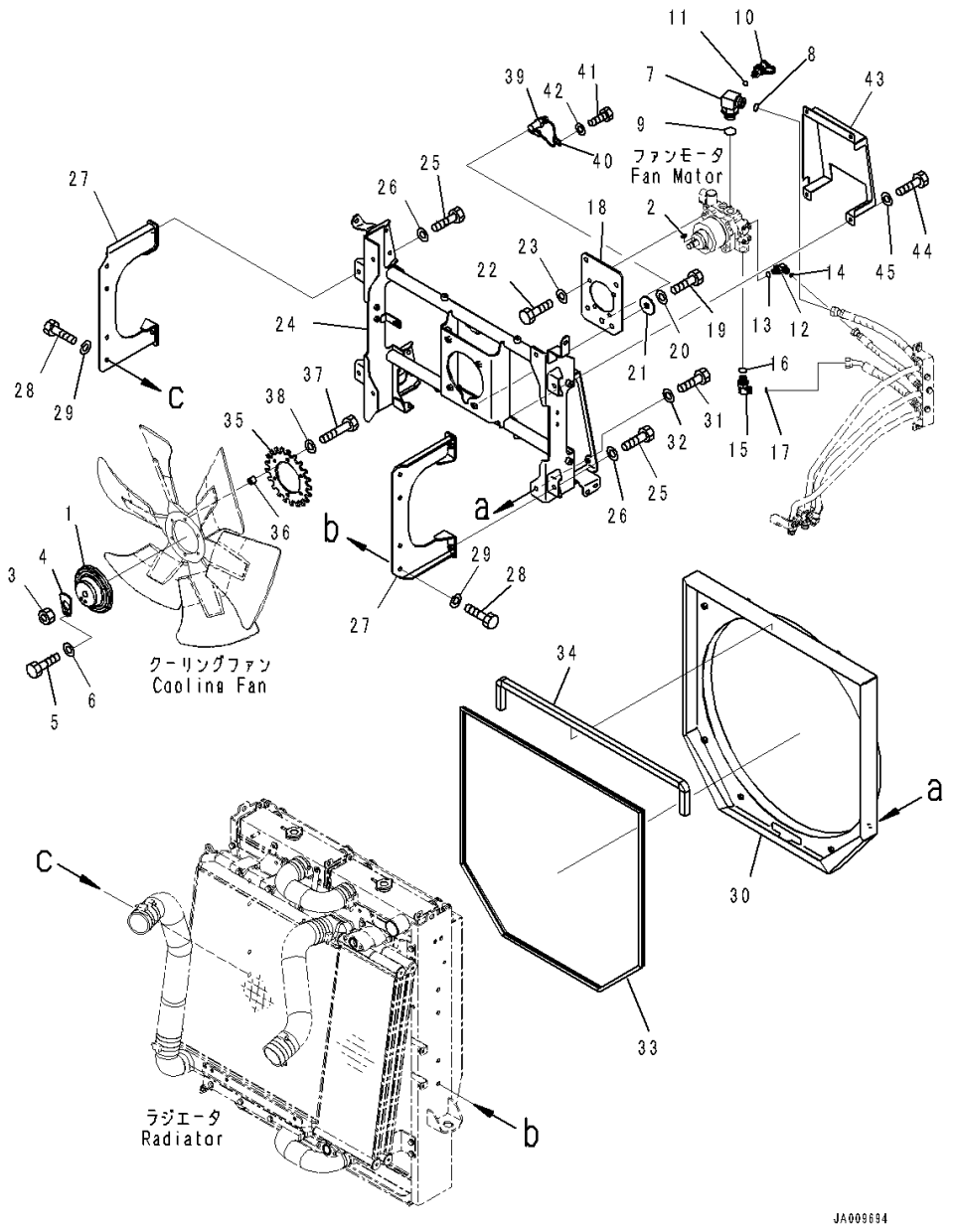

Index	Code	Part Number	Description	Qty	Serial Number
1		423-03-31710	Boss	1	90216-
2		04010-00722	Key	1	90216-
3		01583-12012	Nut	1	90216-
4		154-03-72270	Lock	1	90216-
5		01010-81020	Bolt	1	90216-
6		01643-31032	Washer	1	90216-
7		421-62-41510	Elbow	1	90216-
8		02896-11015	O-ring	1	90216-
9		07002-12434	O-ring	1	90216-
10		799-101-5220	Nipple	1	90216-
11		07002-11023	O-ring	1	90216-
12		02782-10420	Elbow	1	90216-
13		07002-11823	O-ring	1	90216-
14		02896-11012	O-ring	1	90216-
15		02782-10522	Elbow	1	90216-
16		07002-12434	O-ring	1	90216-
17		02896-11015	O-ring	1	90216-
18		421-62-41860	Plate	1	90216-
19		01010-81230	Bolt	4	90216-
20		01643-31232	Washer	4	90216-
21		419-43-17920	Washer	4	90216-
22		01010-81230	Bolt	4	90216-
23		01643-31232	Washer	4	90216-
24		421-62-41810	Bracket	1	90216-
25		01010-D1230	Bolt	4	90216-
26		01643-71232	Washer	4	90216-
27		421-03-41240	Bracket	2	90216-
28		01010-81230	Bolt	8	90216-
29		01643-31232	Washer	8	90216-
30		421-03-41840	Shroud	1	90216-
31		01010-D1245	Bolt	4	90216-
32		01643-71232	Washer	4	90216-
33		421-03-41720	Seal	1	90216-
34		421-03-41510	Seal	1	90216-
35		421-62-41870	Plate	1	90216-
36		175-79-83760	Spacer	6	90216-
37		01010-81060	Bolt	6	90216-
38		01643-31032	Washer	6	90216-
39		7861-93-2330	Sensor, Magnetic Pick-Up, Cooling Fan Speed	1	90216-

FIG. C0110-004005 Radiator (Mounting) (2/3)

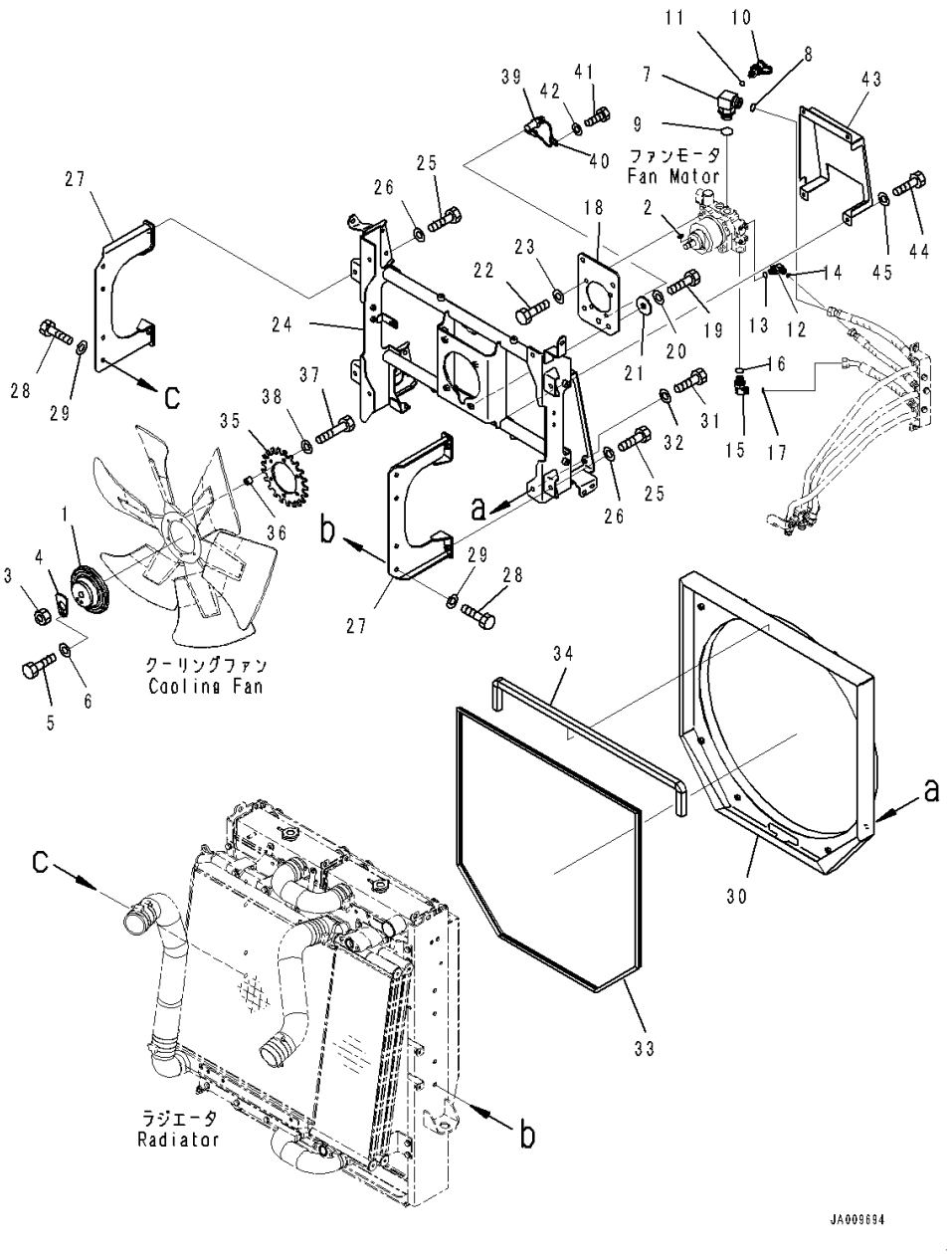

Index	Code	Part Number	Description	Qty	Serial Number
40		04434-50510	Clip	1	90216-
41		01010-81016	Bolt	1	90216-
42		01643-31032	Washer	1	90216-
43		421-62-42510	Cover	1	90216-
44		01010-D1020	Bolt	4	90216-
45		01643-71032	Washer	4	90216-

FIG. C0110-004006 Radiator (Fan Guard)

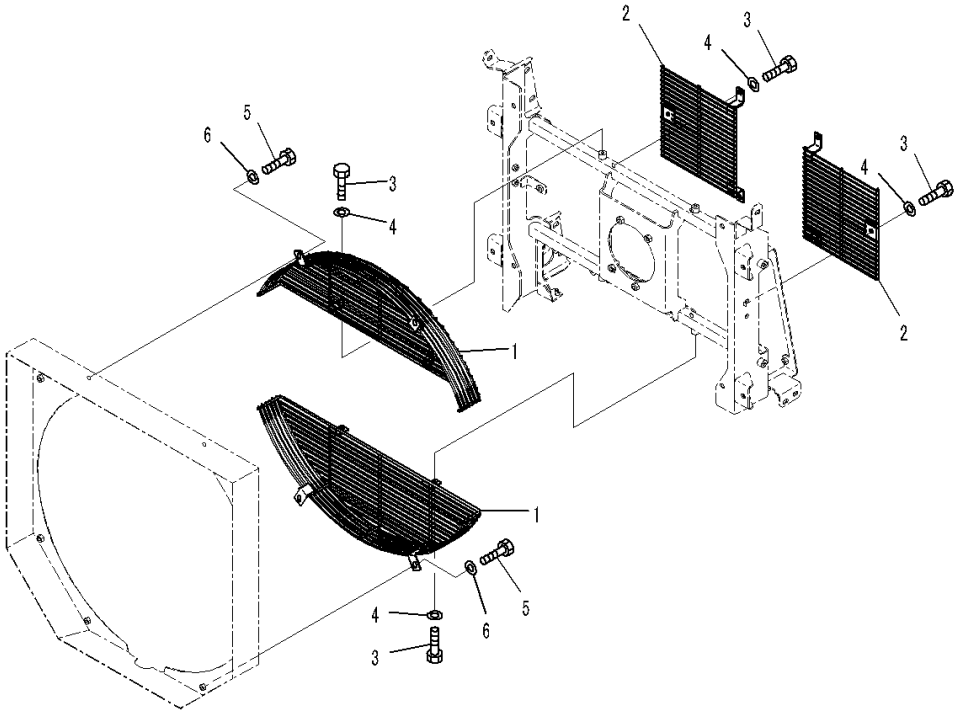

Index	Code	Part Number	Description	Qty	Serial Number
1		421-03-33112	Guard	2	90216-
2		421-03-33122	Guard	2	90216-
3		01010-D1020	Bolt	10	90216-
4		01643-71032	Washer	10	90216-
5		01010-D1050	Bolt	4	90216-
6		01643-71032	Washer	4	90216-

FIG. C0110-004007 Radiator (Backup Alarm)

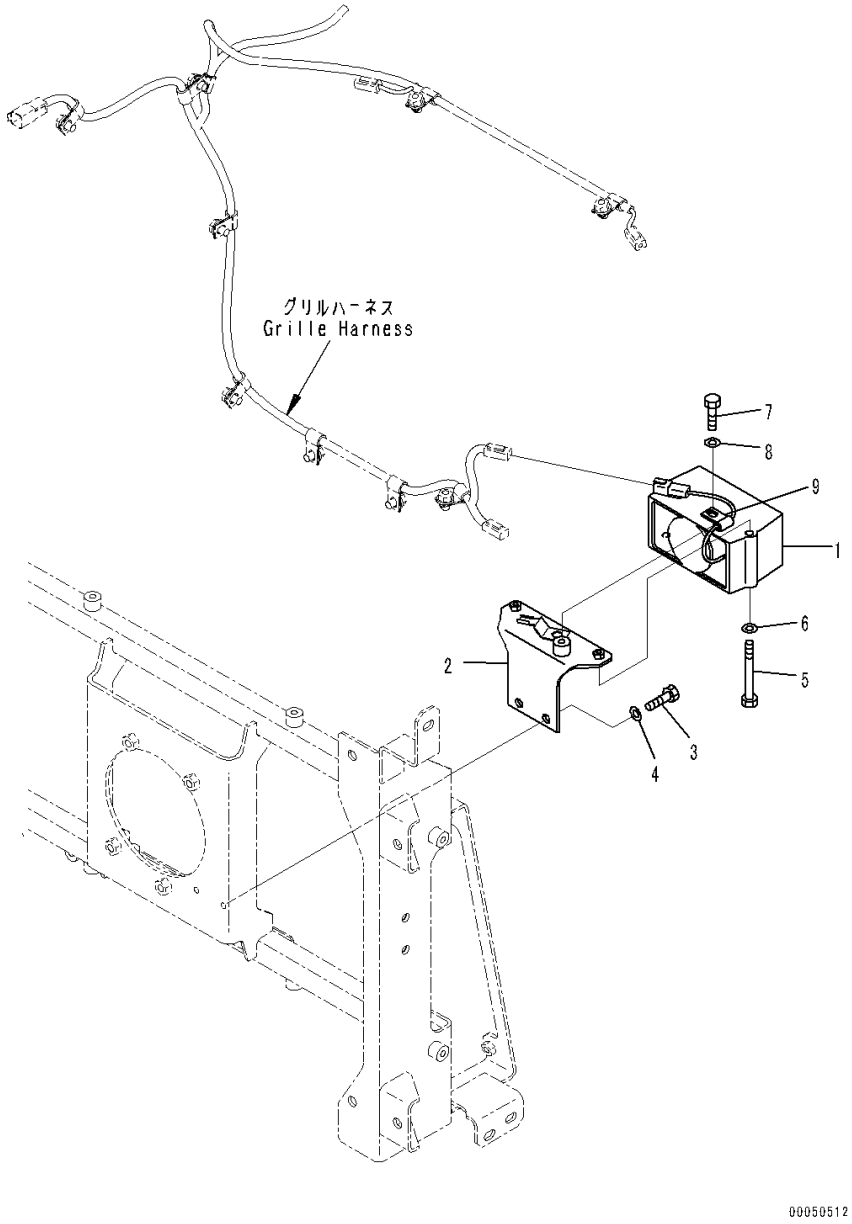

Index	Code	Part Number	Description	Qty	Serial Number
1		08164-B1000	Alarm, Back-up	1	90216-
2		421-06-41110	Bracket	1	90216-
3		01010-D1025	Bolt	2	90216-
4		01643-71032	Washer	2	90216-
5		01010-80895	Bolt	2	90216-
6		01643-70823	Washer	2	90216-
7		01010-81016	Bolt	1	90216-
8		01643-31032	Washer	1	90216-
9		04434-50610	Clip	1	90216-

FIG. C0110-004008 Radiator (Grille)

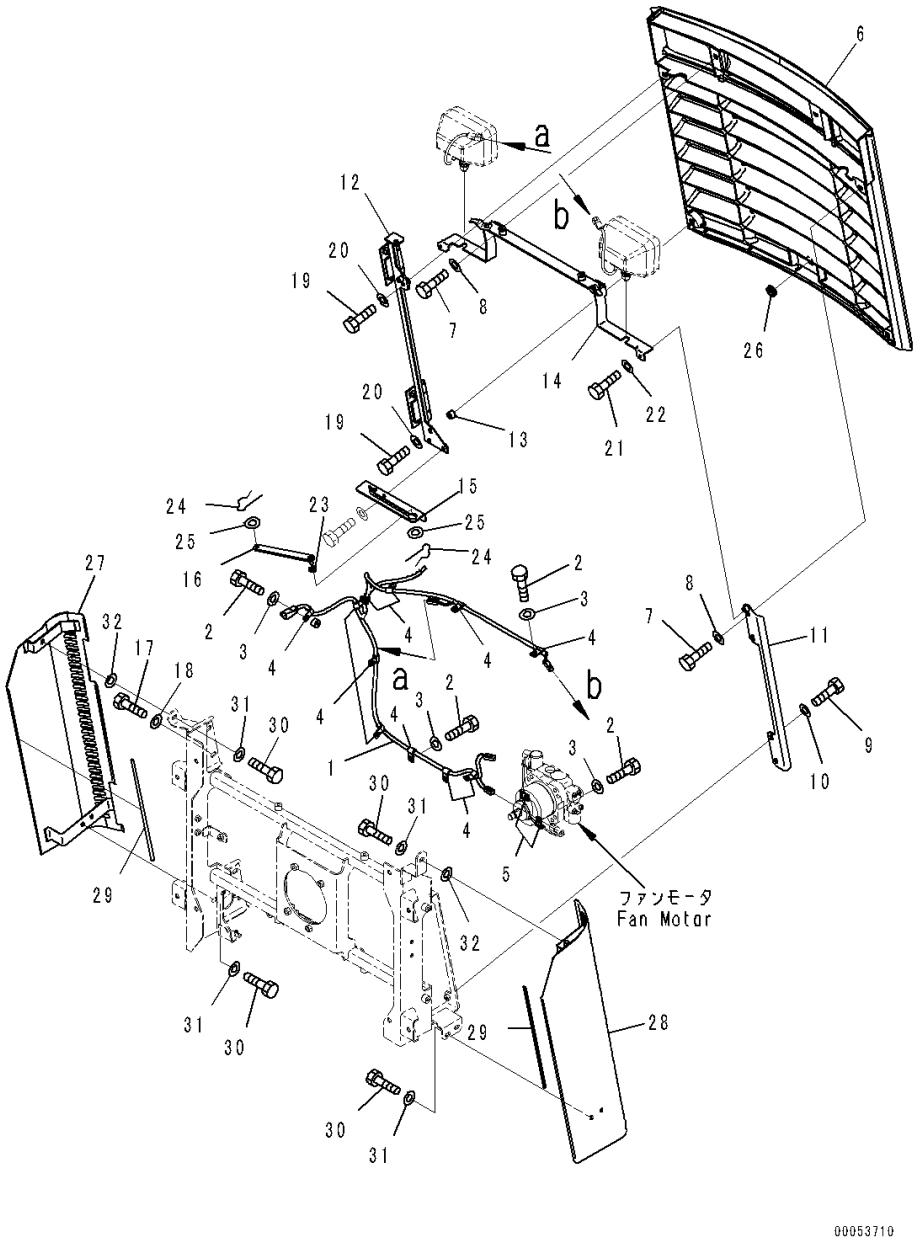

Index	Code	Part Number	Description	Qty	Serial Number
1		421-06-43210	Wiring Harness	1	90216-
2		01010-D1016	Bolt	12	90216-
3		01643-71032	Washer	12	90216-
4		04434-51012	Clip	11	90216-
5		04434-50610	Clip	2	90216-
6		424-54-31823	Grille	1	90216-
7		01010-81020	Bolt	6	90216-
8		01643-31032	Washer	6	90216-
9		01010-D1020	Bolt	2	90216-
10		01643-71032	Washer	2	90216-
11		421-54-42220	Bracket	1	90216-
12		421-54-42230	Bracket	1	90216-
13		195-01-14540	Collar	1	90216-
14		421-06-41130	Bracket	1	90216-
15		421-54-42721	Plate	1	90216-
16		421-54-42711	Stopper	1	90216-
17		01010-81225	Bolt	4	90216-
18		01643-31232	Washer	4	90216-
19		01010-81035	Bolt	2	90216-
20		01643-31032	Washer	2	90216-
21		01010-80820	Bolt	2	90216-
22		01643-30823	Washer	2	90216-
23		08037-01008	Grommet	1	90216-
24		04052-21038	Pin, Snap	2	90216-
25		01640-21016	Washer	2	90216-
26		09415-02110	Cap	1	90216-
27		421-54-42241	Cover	1	90216-
28		421-54-42251	Cover	1	90216-
29		21W-46-47121	Seal	2	90216-
30		01010-D1020	Bolt	6	90216-
31		01643-71032	Washer	6	90216-
32		01643-31032	Washer	2	90216-

FIG. C0110-004009 Radiator (Working Lamp)

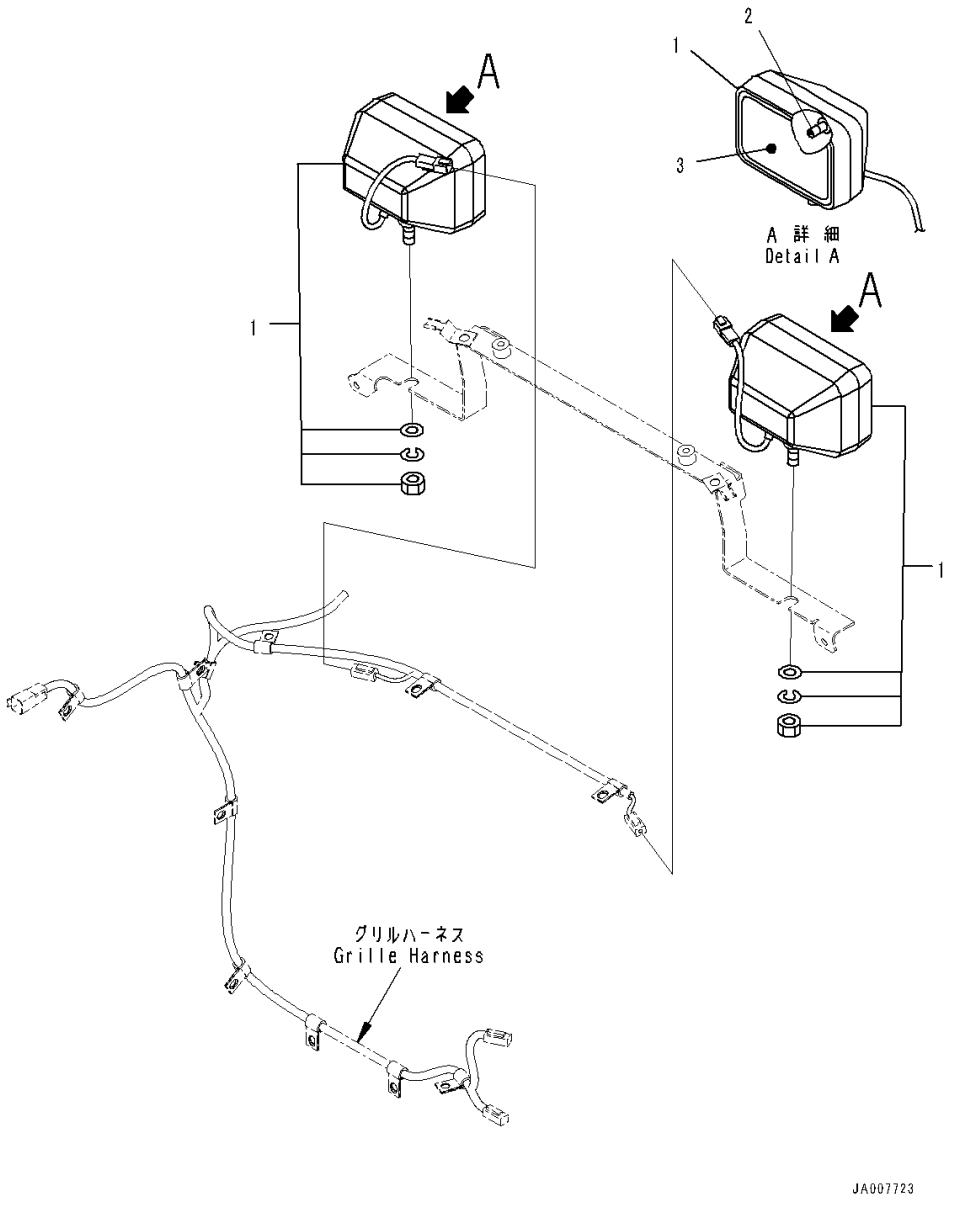

Index	Code	Part Number	Description	Qty	Serial Number
1		22B-06-11690	Lamp Assembly, Working	2	90216-
2		421-06-23330	• Bulb, 70watt	1	90216-
3		22B-06-11990	• Lens	1	90523-

FIG. C0110-004010 Radiator (Fan Motor Piping)

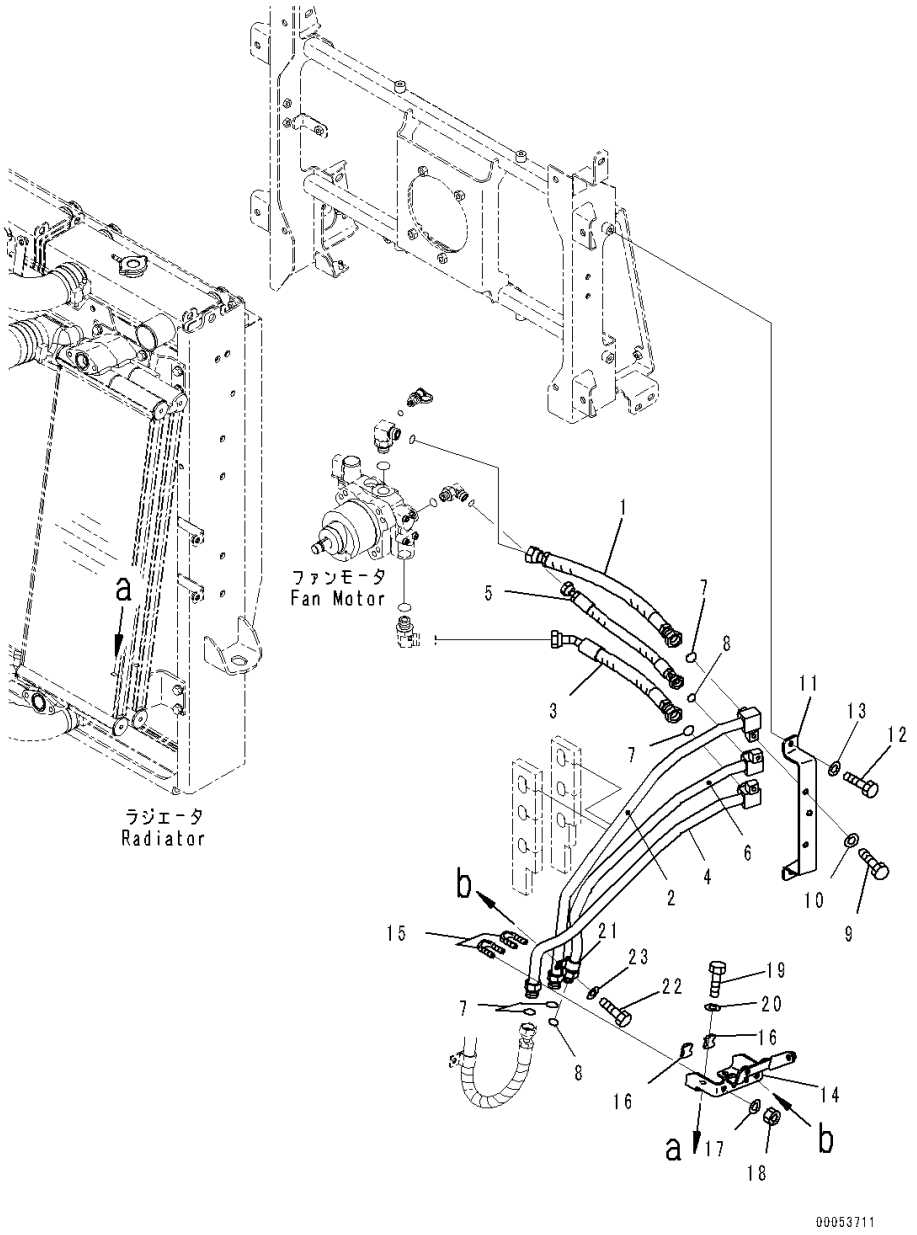

Index	Code	Part Number	Description	Qty	Serial Number
1		421-62-41480	Hose	1	90216-
2		421-62-41120	Tube	1	90216-
3		421-62-41240	Hose	1	90216-
4		421-62-41130	Tube	1	90216-
5		421-62-41490	Hose	1	90216-
6		421-62-41140	Tube	1	90216-
7		02896-11015	O-ring	4	90216-
8		02896-11012	O-ring	2	90216-
9		01010-81020	Bolt	3	90216-
10		01643-31032	Washer	3	90216-
11		421-62-41150	Plate	1	90216-
12		01010-81020	Bolt	2	90216-
13		01643-31032	Washer	2	90216-
14		421-62-41211	Bracket	1	90216-
15		07283-32236	Clip, Pipe	2	90216-
16		07283-52232	Seat	2	90216-
17		01643-31032	Washer	4	90216-
18		01597-01009	Nut	4	90216-
19		01010-81025	Bolt	2	90216-
20		01643-31032	Washer	2	90216-
21		04434-52110	Clip	1	90216-
22		01010-81020	Bolt	1	90216-
23		01643-31032	Washer	1	90216-

FIG. C0110-004011 Radiator (Oil Cooler Piping)

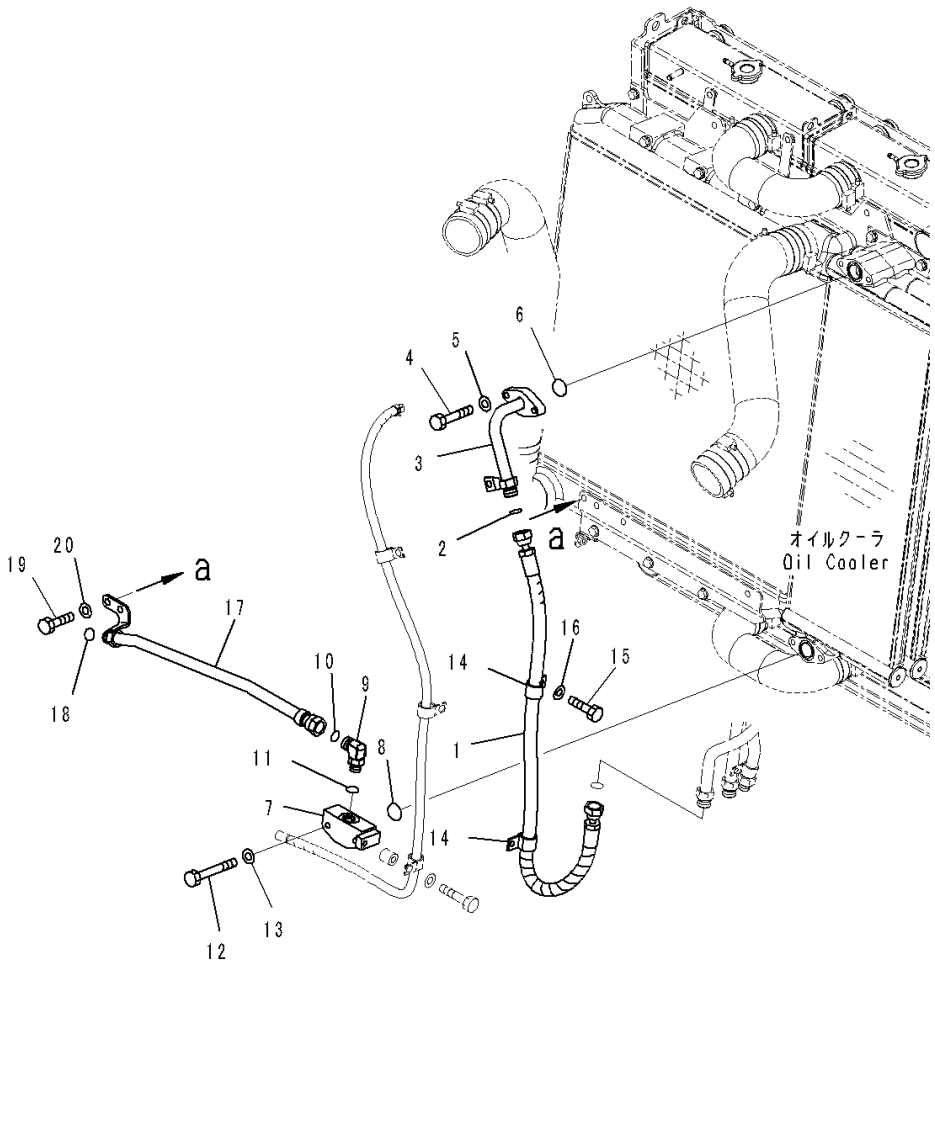

Index	Code	Part Number	Description	Qty	Serial Number
1		421-62-41260	Hose	1	90216-
2		02896-11015	O-ring	1	90216-
3		421-62-44740	Tube	1	90216-
4		01010-81040	Bolt	2	90216-
5		01643-31032	Washer	2	90216-
6		07000-13035	O-ring	1	90216-
7		421-62-41190	Block	1	90216-
8		07000-13035	O-ring	1	90216-
9		02782-10516	Elbow	1	90216-
10		02896-11015	O-ring	1	90216-
11		07002-12034	O-ring	1	90216-
12		01010-81060	Bolt	2	90216-
13		01643-31032	Washer	2	90216-
14		04434-52312	Clip	2	90216-
15		01010-81020	Bolt	1	90216-
16		01643-31032	Washer	1	90216-
17		421-62-41220	Tube	1	90216-
18		02896-11015	O-ring	1	90216-
19		01010-81025	Bolt	2	90216-
20		01643-31032	Washer	2	90216-

FIG. C0110-004012 Radiator (Rear Support)

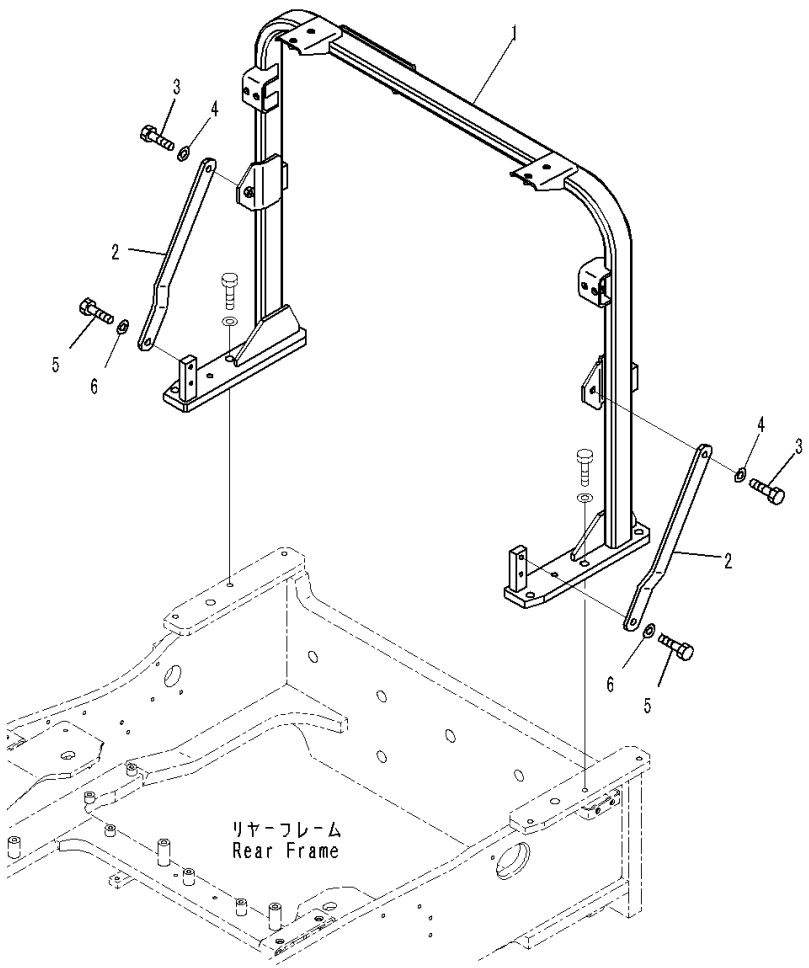

Index	Code	Part Number	Description	Qty	Serial Number
1		421-54-41160	Support	1	90216-
2		421-54-42410	Plate	2	90216-
3		01010-81230	Bolt	2	90216-
4		01643-31232	Washer	2	90216-
5		01010-81225	Bolt	2	90216-
6		01643-31232	Washer	2	90216-

FIG. C0110-004013 Radiator (Condenser)

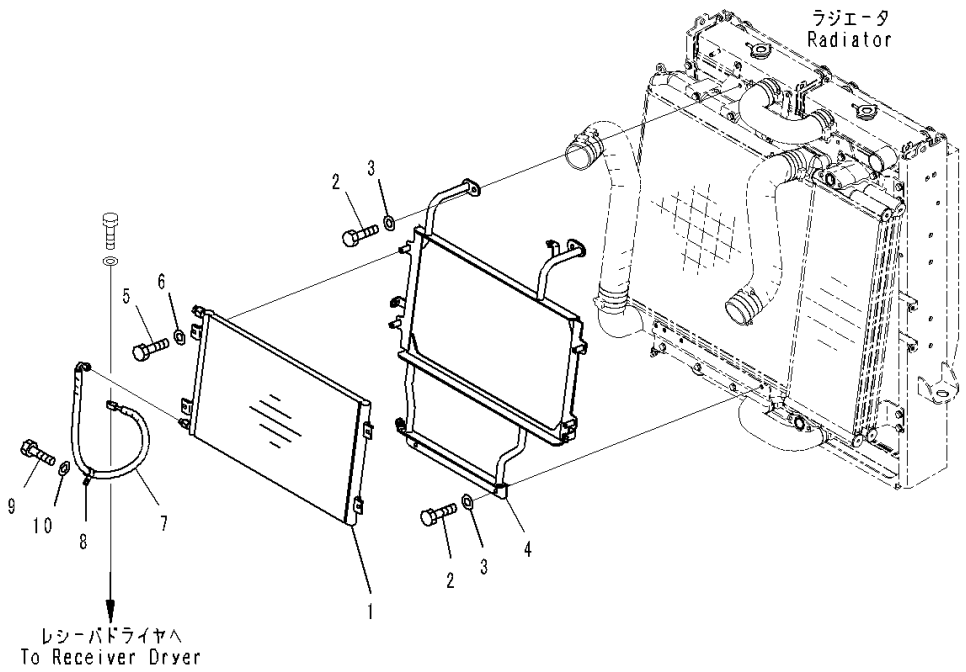

Index	Code	Part Number	Description	Qty	Serial Number
1		421-S62-4120	Condenser	1	90216-
		AN51439-D0031	• O-ring	2	90216-
2		01010-80816	Bolt	4	90216-
3		01643-30823	Washer	4	90216-
4		421-S62-4110	Bracket	1	90216-
5		01010-81025	Bolt	4	90216-
6		01643-31032	Washer	4	90216-
7		421-S62-4160	Hose	1	90216-
8		04434-51910	Clip	1	90216-
9		01010-81020	Bolt	1	90216-
10		01643-31032	Washer	1	90216-

FIG. C0110-004014 Radiator (Breather, Fuel Tank)

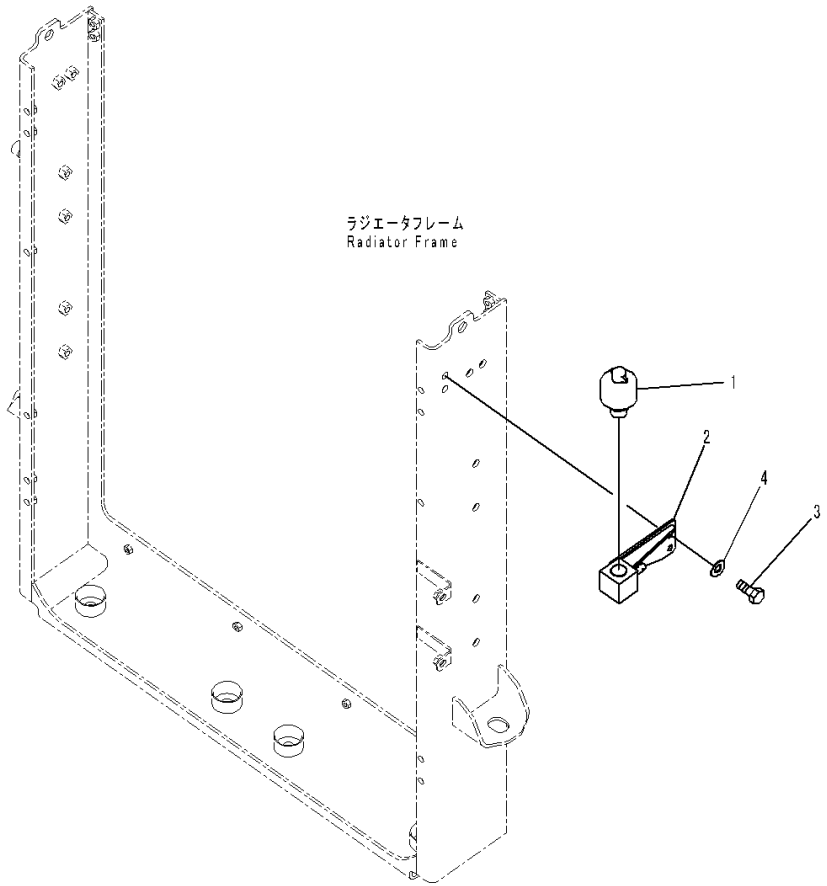

Index	Code	Part Number	Description	Qty	Serial Number
1		208-04-71780	Breather	1	90216-
		421-60-35170	• Element	1	90216-
		421-60-35180	• Cover	1	90216-
		421-60-35190	• Nut	1	90216-
2		421-04-41260	Block	1	90216-
3		01010-81025	Bolt	2	90216-
4		01643-31032	Washer	2	90216-

FIG. C0110-004015 Radiator (Mounting) (3/3)

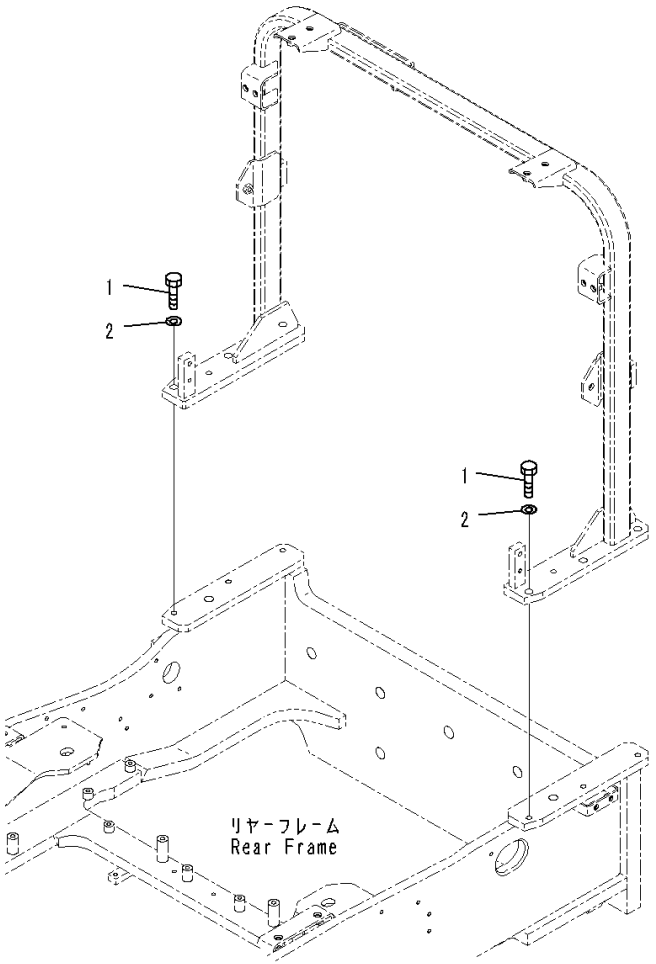

Index	Code	Part Number	Description	Qty	Serial Number
1		01010-81445	Bolt	6	90216-
2		01643-31445	Washer, Flat	6	90216-

FIG. C0110-004016 Radiator (Piping)

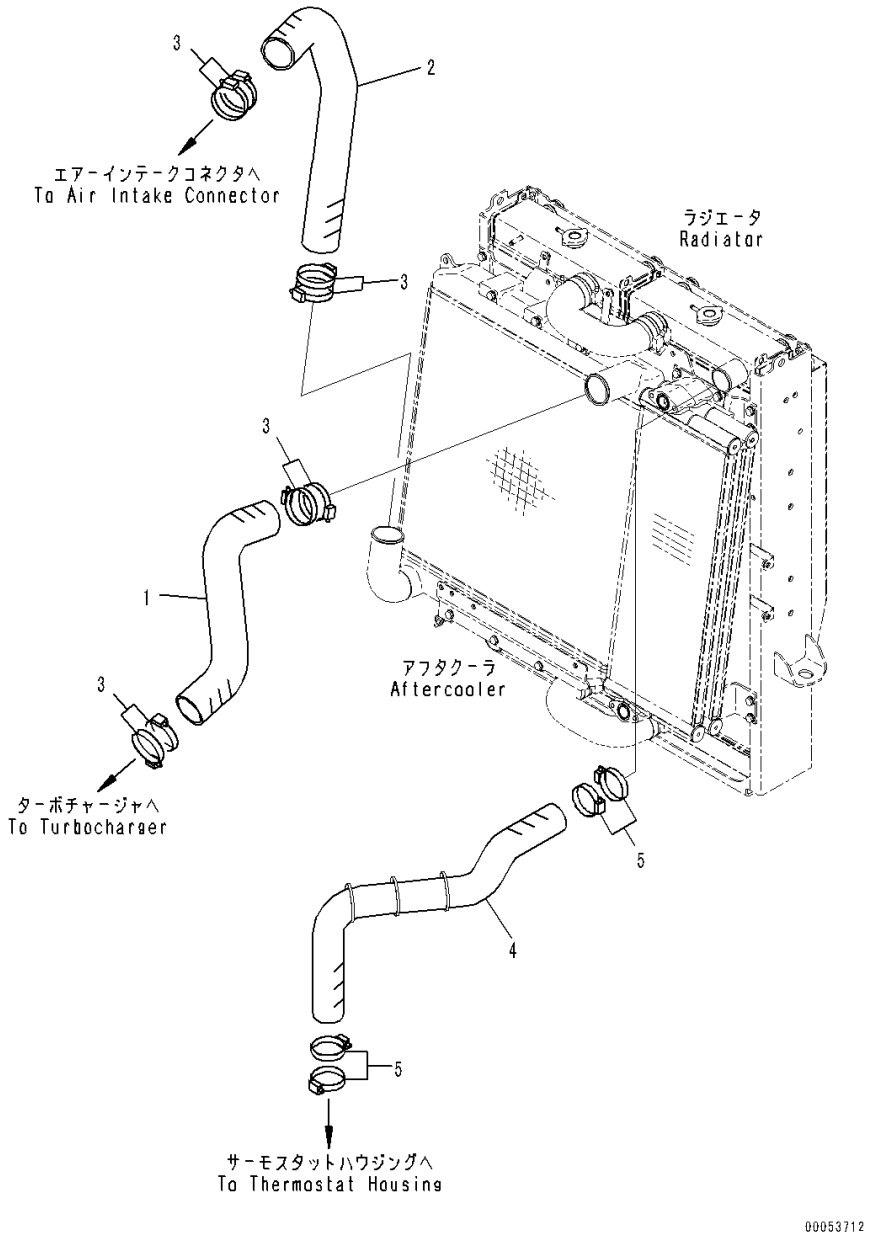

Index	Code	Part Number	Description	Qty	Serial Number
1		421-03-41171	Hose	1	90216-
2		421-03-42180	Hose	1	90216-
3		07299-00080	Clamp, Hose	8	90216-
4		421-03-41191	Hose	1	90216-
5		07289-00070	Clamp	4	90216-

FIG. C0110-004017 Radiator (Torque Converter Cooler Piping)

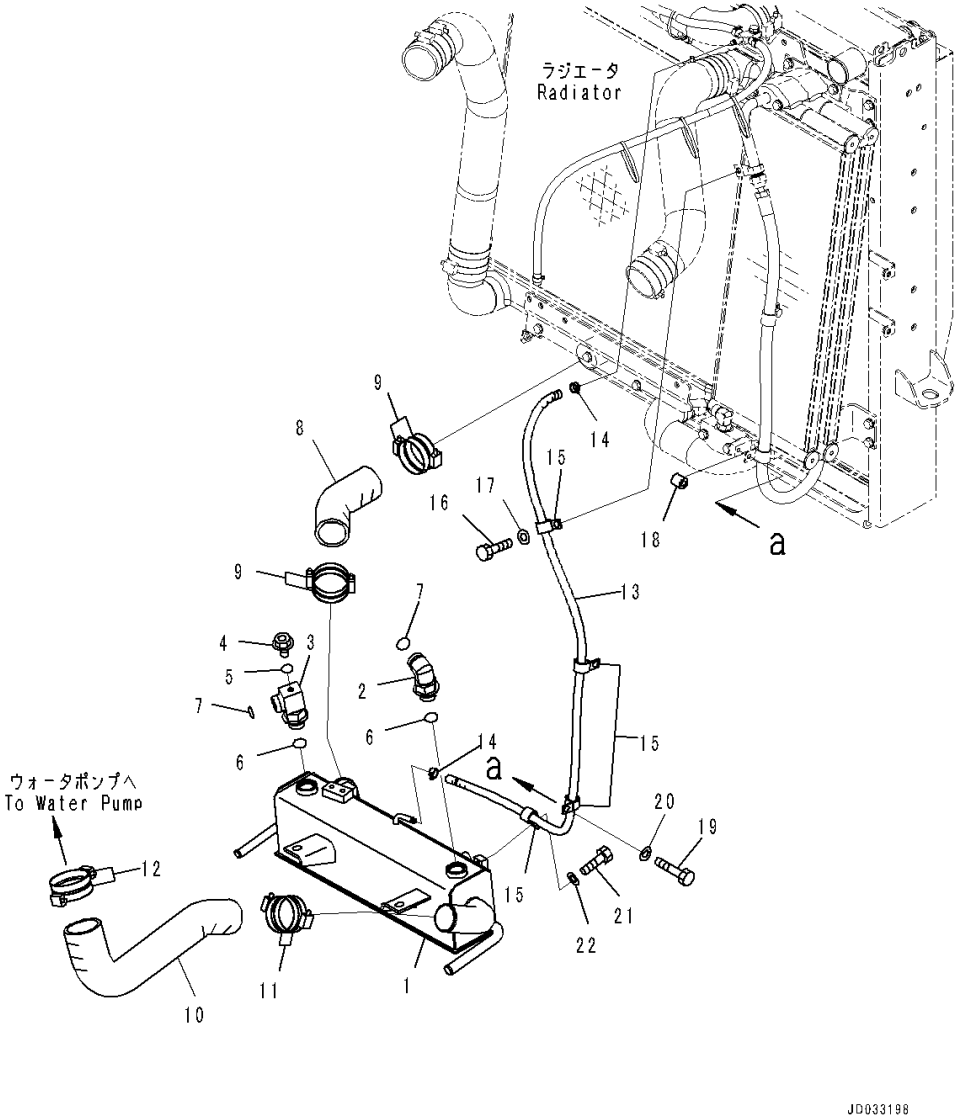

Index	Code	Part Number	Description	Qty	Serial Number
1		421-16-45160	Cooler	1	90216-
2		21W-62-42640	Elbow	1	90216-
3		421-03-42230	Elbow	1	90216-
4		708-8E-16150	Plug	1	90216-
5		07002-11023	O-ring	1	90216-
6		07002-23334	O-ring	2	90216-
7		421-09-31140	O-ring	2	90216-
8		421-03-42250	Hose	1	90216-
9		07289-00070	Clamp	4	90216-
10		421-03-32132	Hose	1	90216-
11		07289-00070	Clamp	2	90216-
12		07289-00080	Clamp	2	90216-
13		421-16-41180	Hose	1	90216-
14		11Y-09-11140	Clip	2	90216-
15		04434-52312	Clip	4	90216-
16		01010-81020	Bolt	1	90216-
17		01643-31032	Washer	1	90216-
18		195-33-11220	Spacer	1	90216-
19		01010-81045	Bolt	1	90216-
20		01643-31032	Washer	1	90216-
21		01010-81016	Bolt	1	90216-
22		01643-31032	Washer	1	90216-

FIG. C0110-004018 Radiator (Sheet)

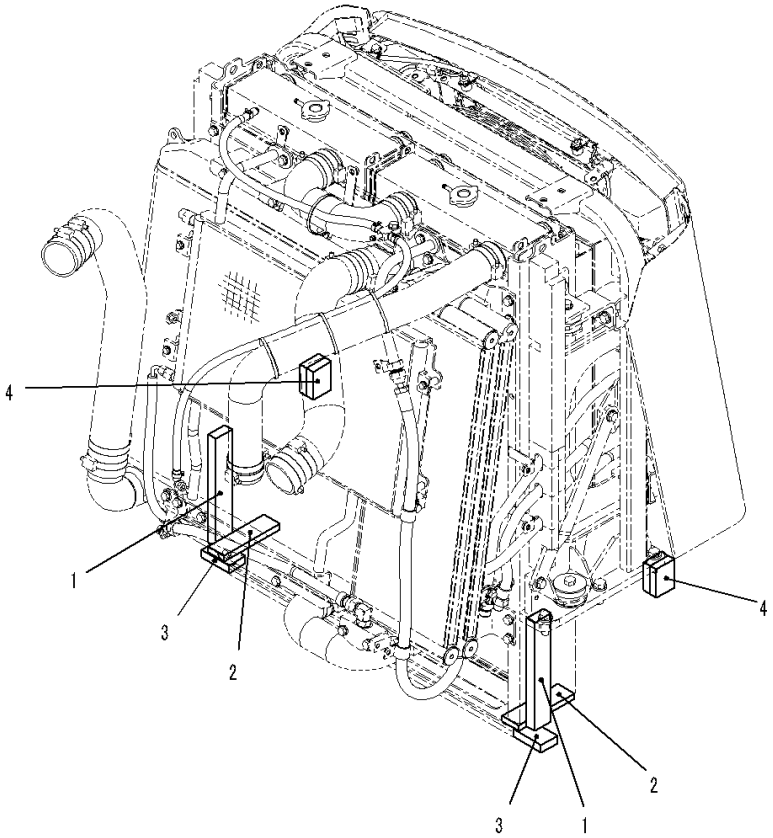

Index	Code	Part Number	Description	Qty	Serial Number
1		421-54-42550	Sheet	2	90216-
2		421-54-42740	Sheet	2	90216-
3		421-54-42750	Sheet	2	90216-
4		421-54-42761	Sheet	2	90216-

FIG. C0110-004019 Radiator (Sub-tank)

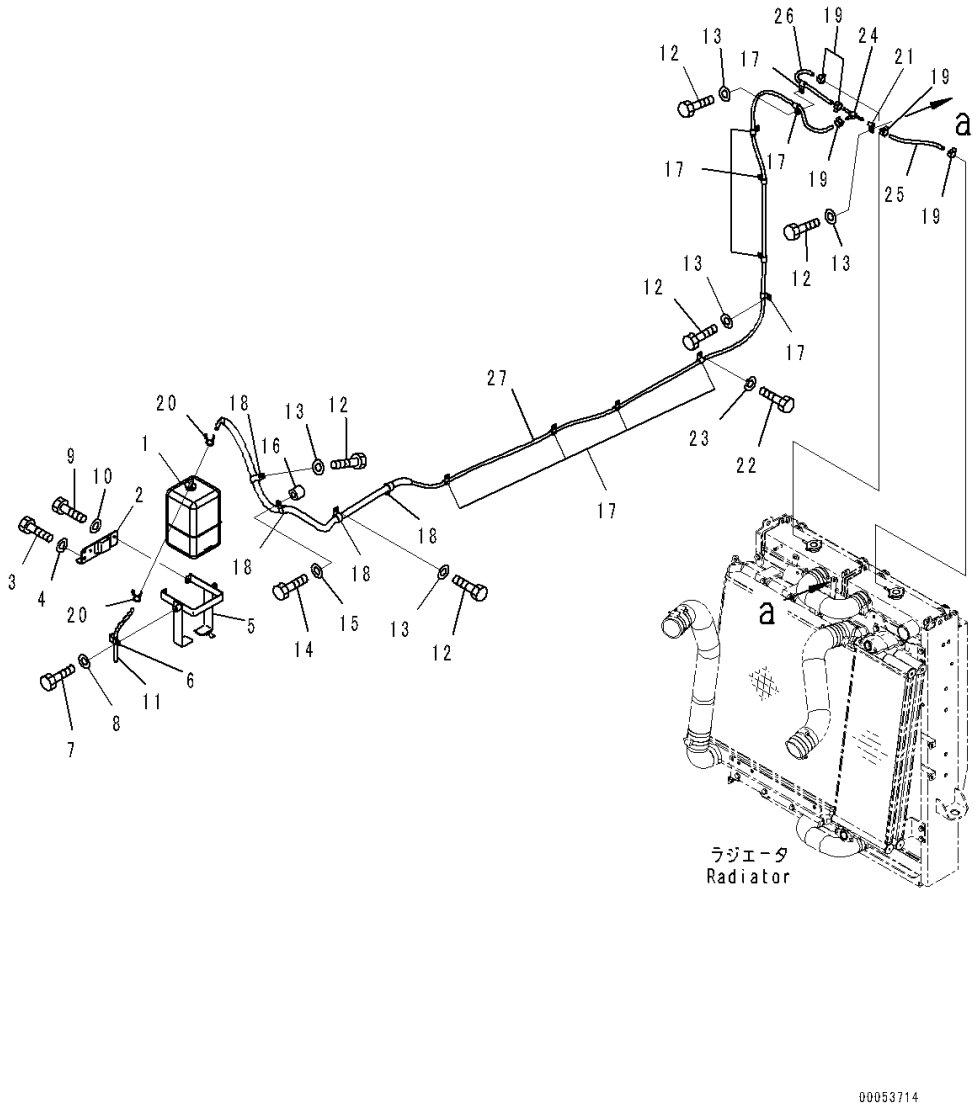

Index	Code	Part Number	Description	Qty	Serial Number
1		421-03-31181	Tank	1	90216-
2		421-03-41610	Bracket	1	90216-
3		01010-81025	Bolt	2	90216-
4		01643-31032	Washer	2	90216-
5		424-03-41440	Bracket	1	90216-
6		04434-51210	Clip	1	90216-
7		01010-81020	Bolt	1	90216-
8		01643-31032	Washer	1	90216-
9		01010-80820	Bolt	2	90216-
10		01643-30823	Washer	2	90216-
11		417-03-21150	Hose	1	90216-
12		01010-81020	Bolt	4	90216-
13		01643-31032	Washer	4	90216-
14		01010-81040	Bolt	1	90216-
15		01643-31032	Washer	1	90216-
16		175-79-83760	Spacer	1	90216-
17		04434-51210	Clip	10	90216-
18		04434-52312	Clip	4	90216-
19		07285-00115	Clip	5	90216-
20		206-03-43340	Clip	2	90216-
21		04434-50810	Clip	1	90216-
22		01010-D1030	Bolt	1	90216-
23		01643-71032	Washer	1	90216-
24		421-03-41340	Joint	1	90216-
25		421-03-41810	Hose	1	90216-
26		421-03-41820	Hose	1	90216-
27		421-03-41831	Hose	1	90216-

FIG. C0110-004020 Radiator (Spill Hose Piping)

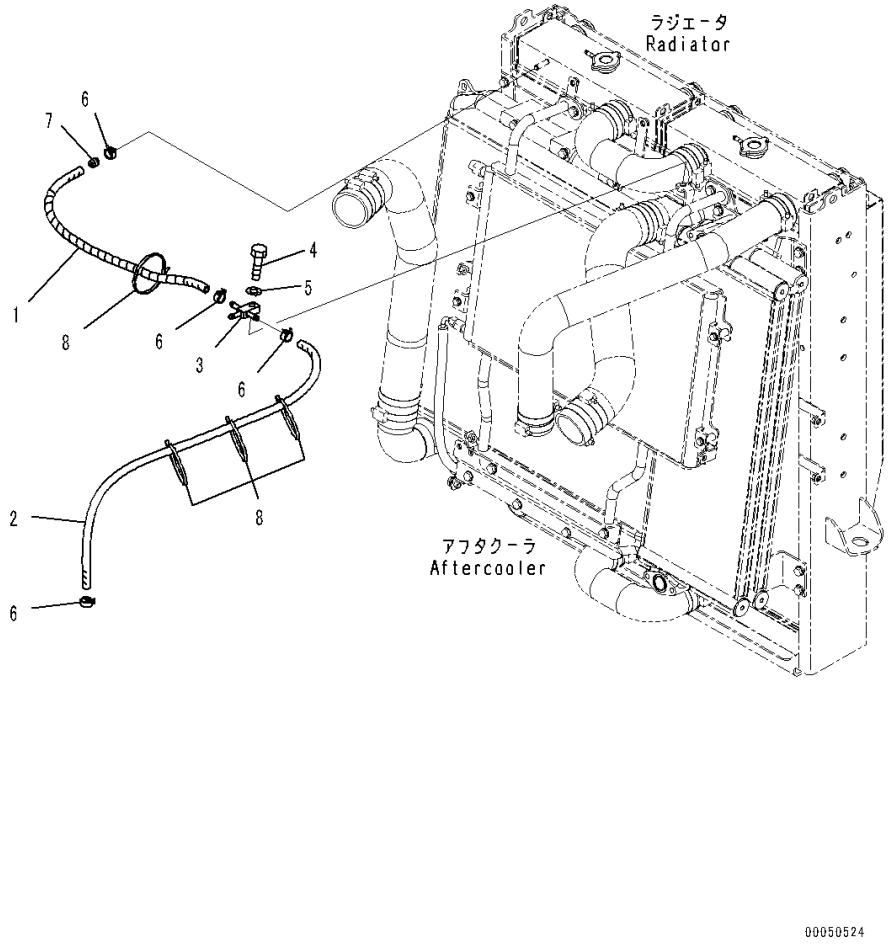

Index	Code	Part Number	Description	Qty	Serial Number
1		421-03-41330	Hose	1	90216-
2		421-03-41521	Hose	1	90216-
3		421-03-41530	Joint	1	90216-
4		01010-81035	Bolt	1	90216-
5		01643-31032	Washer	1	90216-
6		11Y-09-11140	Clip	4	90216-
7		423-03-11531	Tube	1	90216-
8		134-03-61410	Band	4	90216-

FIG. C0110-005001A Radiator (For Europe Specification) (Radiator Core, Aftercooler and Oil Cooler)

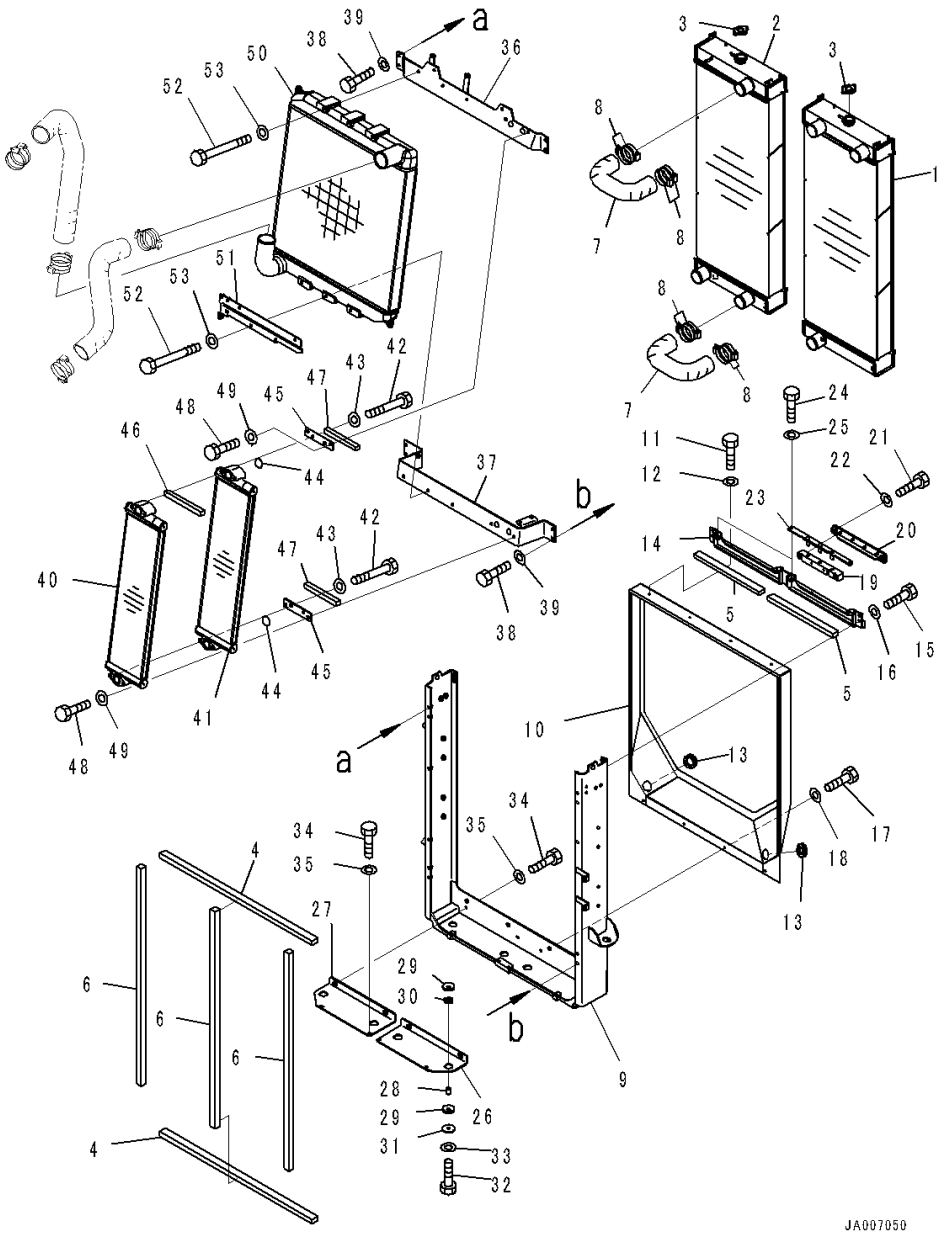

Index	Code	Part Number	Description	Qty	Serial Number
		421-03-41501	Radiator Assembly	1	90461-
1		421-03-44180	• Core	1	90461-
2		421-03-44190	• Core	1	90461-
3		416-03-11170	• Cap	2	90216-
4		421-03-41150	• Packing	2	90216-
5		421-03-41650	• Packing	2	90461-
6		421-03-41160	• Packing	3	90216-
7		421-03-44430	• Hose	2	90216-
8		07289-00070	• Clamp	8	90216-
9		421-03-41490	• Frame	1	90461-
10		421-03-41130	• Shroud	1	90216-
11		01010-80820	• Bolt	4	90216-
12		01643-30823	• Washer	4	90216-
13		09415-03614	• Cap	2	90216-
14		421-03-41560	• Bracket	1	90461-
15		01010-81025	• Bolt	4	90216-
16		01643-31032	• Washer	4	90216-
17		01010-80820	• Bolt	4	90216-
18		01643-30823	• Washer	4	90216-
19		423-03-41340	• Rubber	2	90461-
20		423-03-41350	• Bracket	2	90461-
21		01010-81035	• Bolt	4	90461-
22		01643-31032	• Washer	4	90461-
23		423-03-41390	• Plate	2	90461-
24		01010-81025	• Bolt	4	90461-
25		01643-31032	• Washer	4	90461-
26		421-03-41460	• Bracket	1	90461-
27		421-03-41470	• Bracket	1	90461-
28		22T-56-23290	• Spacer	4	90461-
29		423-03-41370	• Cushion	8	90461-
30		421-64-25130	• Cushion	4	90461-
31		11Y-03-32260	• Washer	4	90461-
32		01010-81050	• Bolt	4	90461-
33		01643-31032	• Washer	4	90461-
34		01010-81025	• Bolt	8	90461-
35		01643-31032	• Washer	8	90461-
36		421-03-41210	• Bracket	1	90216-
37		421-03-41220	• Bracket	1	90216-
38		01010-81025	• Bolt	8	90216-
39		01643-31032	• Washer	8	90216-

FIG. C0110-005001A Radiator (For Europe Specification) (Radiator Core, Aftercooler and Oil Cooler)

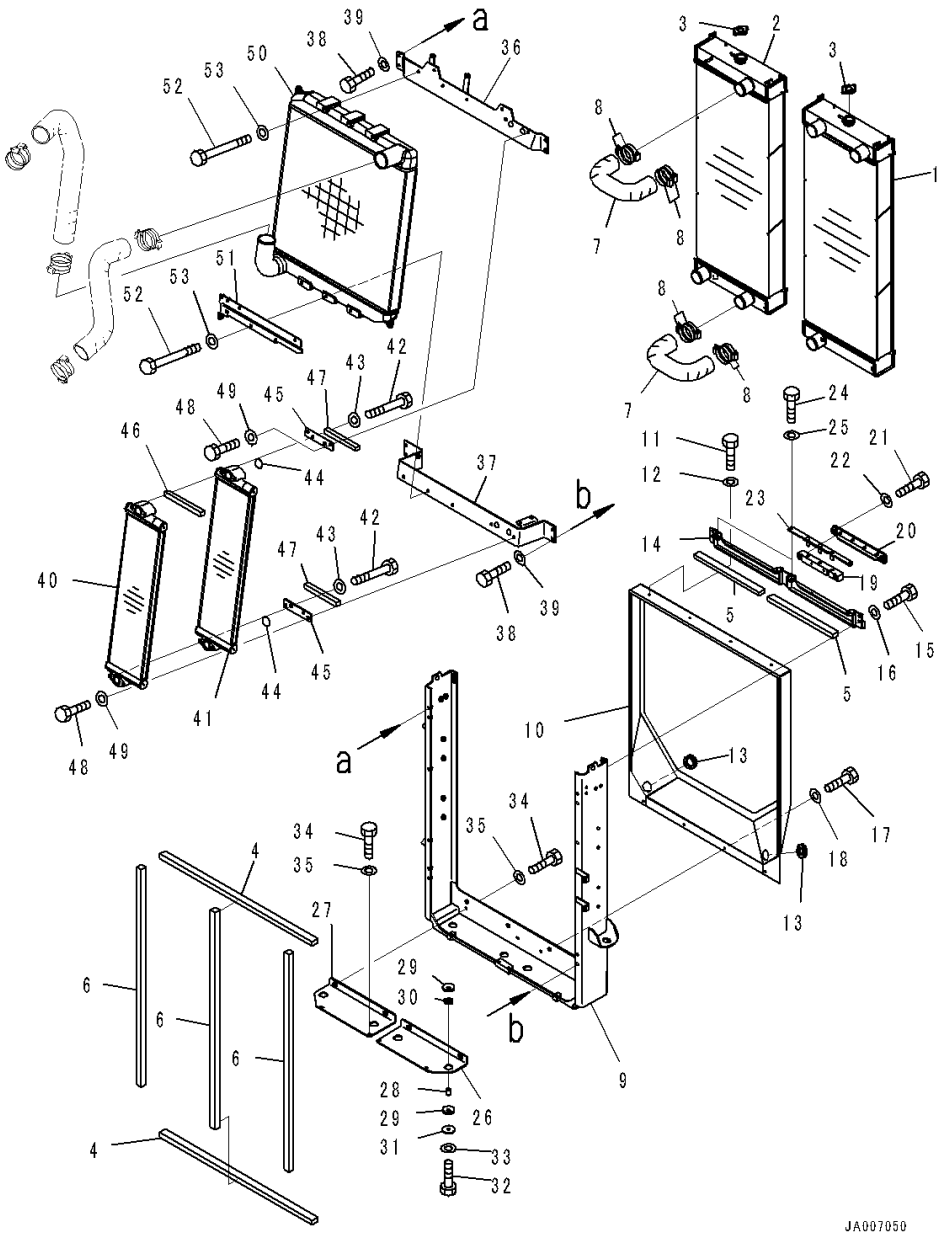

Index	Code	Part Number	Description	Qty	Serial Number
		421-03-44030	• Oil Cooler Assembly	1	90216-
40		421-03-44210	• • Oil Cooler	1	90216-
41		421-03-44220	• • Oil Cooler	1	90216-
42		01010-81080	• • Bolt	4	90216-
43		01643-31032	• • Washer	4	90216-
44		07000-13035	• • O-ring	2	90216-
45		421-03-44280	• • Plate	2	90216-
46		421-03-44230	• • Packing	1	90216-
47		421-03-41360	• • Packing	2	90216-
48		01010-81025	• Bolt	4	90216-
49		01643-31032	• Washer	4	90216-
50		421-03-44150	• Aftercooler	1	90216-
51		421-03-41260	• Bracket	1	90216-
52		01011-81015	• Bolt	6	90216-
53		01643-31032	• Washer	6	90216-

FIG. C0110-005002 Radiator (For Europe Specification) (Mounting) (1/3)

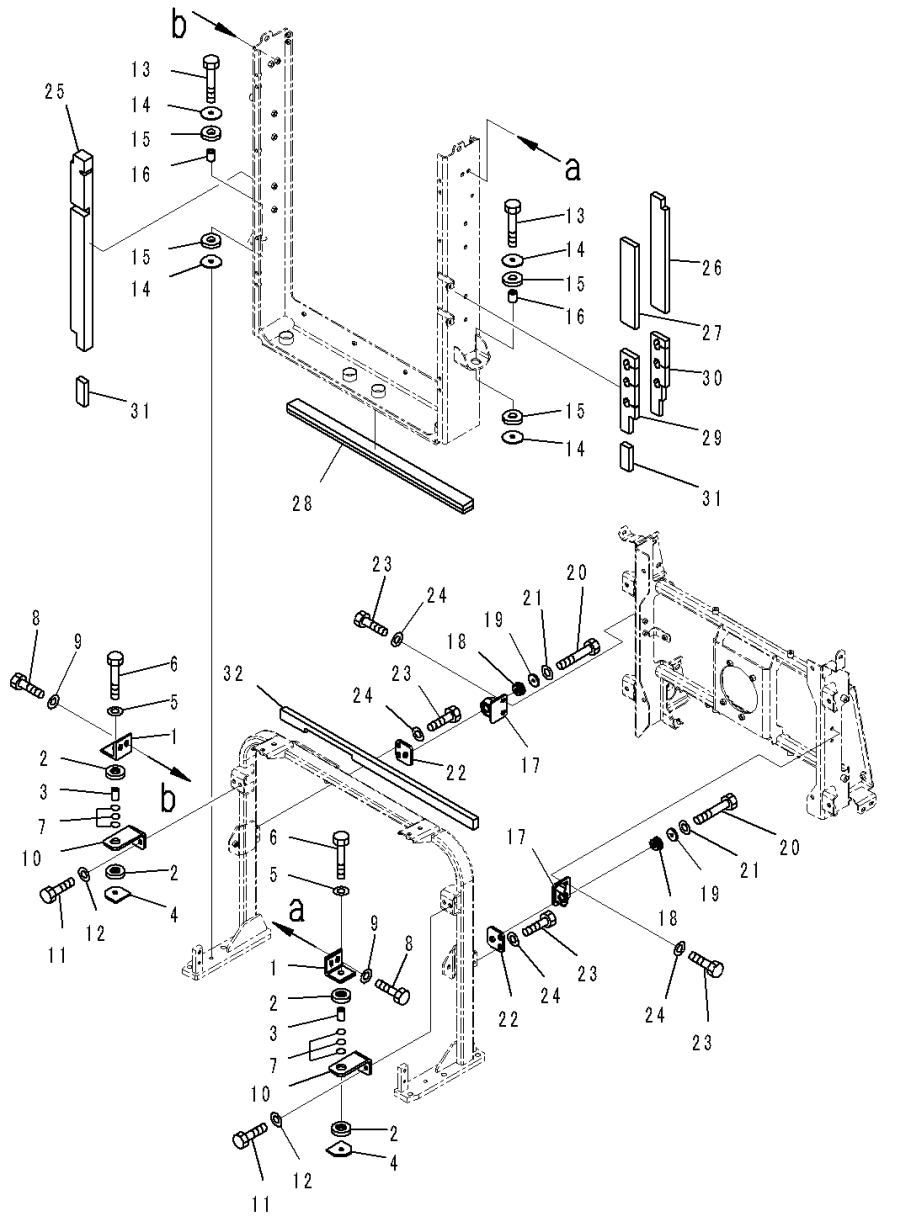

Index	Code	Part Number	Description	Qty	Serial Number
1		207-03-51230	Bracket	2	90216-
2		207-03-51380	Cushion	4	90216-
3		205-03-71330	Collar	2	90216-
4		207-03-51240	Bracket	2	90216-
5		01643-31232	Washer	2	90216-
6		01010-81270	Bolt	2	90216-
7		07000-13022	O-ring	6	90216-
8		01010-81230	Bolt	4	90216-
9		01643-31232	Washer	4	90216-
10		421-03-41230	Plate	2	90216-
11		01010-81230	Bolt	4	90216-
12		01643-31232	Washer	4	90216-
13		01010-81460	Bolt	2	90216-
14		421-03-31271	Washer	4	90216-
15		421-03-31260	Cushion	4	90216-
16		421-03-31281	Spacer	2	90216-
17		421-54-42260	Bracket	2	90216-
18		195-03-41380	Cushion	2	90216-
19		178-60-12250	Collar	2	90216-
20		01010-81050	Bolt	2	90216-
21		01643-31032	Washer	2	90216-
22		421-54-42270	Plate	2	90216-
23		01010-81025	Bolt	8	90216-
24		01643-31032	Washer	8	90216-
25		421-54-42530	Seal	1	90216-
26		421-54-45510	Sheet	1	90216-
27		421-54-45520	Sheet	1	90216-
28		421-54-42570	Sheet	1	90216-
29		421-54-42620	Sheet	1	90216-
30		421-54-42630	Sheet	1	90216-
31		421-54-42640	Sheet	2	90216-
32		421-54-43590	Sheet	1	90216-

FIG. C0110-005003 Radiator (For Europe Specification) (Inner Parts, Fan Motor)

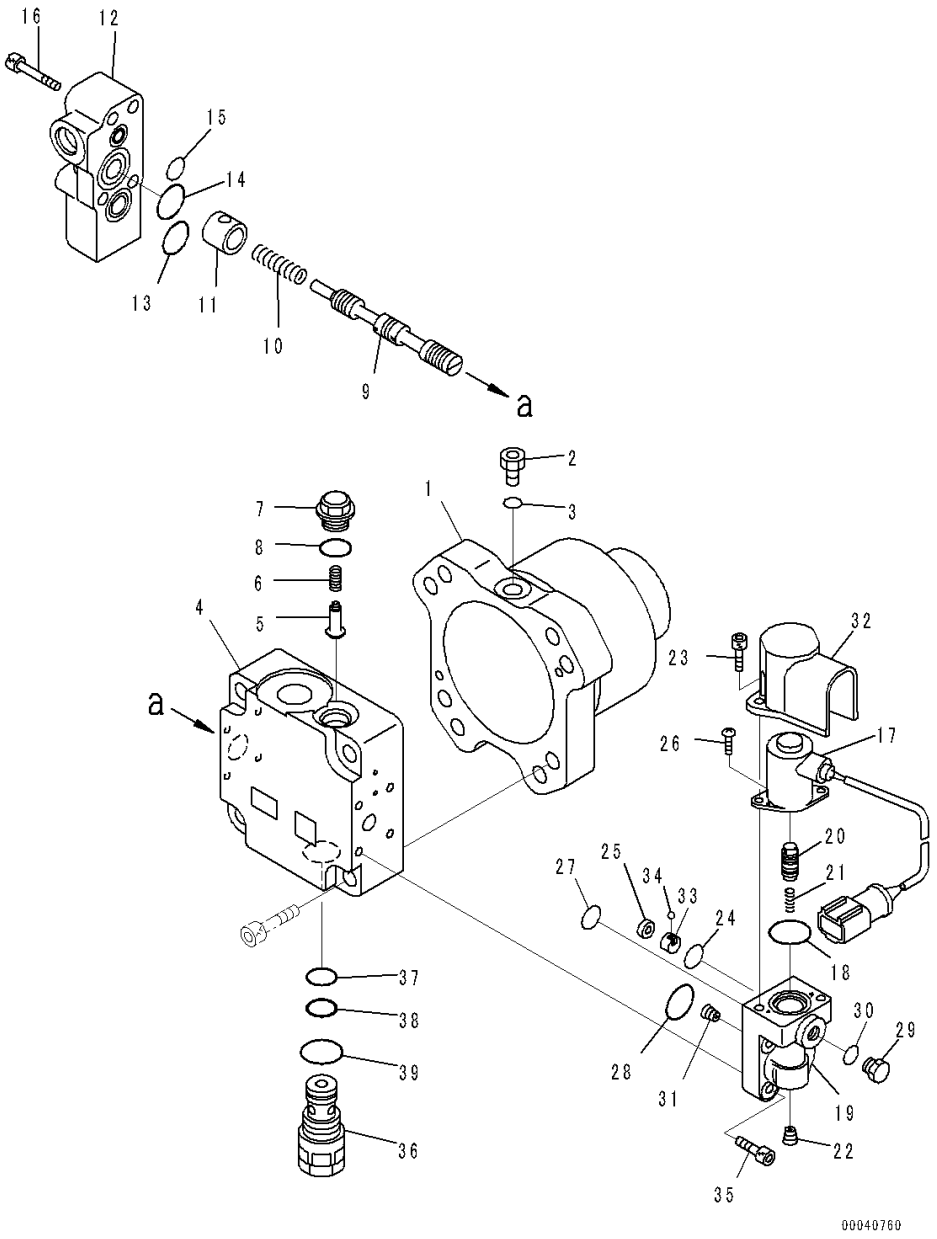

Index	Code	Part Number	Description	Qty	Serial Number
		708-7S-00550	Motor Assembly	1	90216-
1	C2	708-7S-11740	• Case	1	90216-
2		07040-11007	• Plug	1	90216-
3		07002-21023	• O-ring	1	90216-
	C2	708-7S-01430	• Cover Subassembly	1	90216-
4	C1		• • Cover, End	1	90216-
5	C2	708-7R-11210	• • Valve	1	90216-
6	C2	722-10-91130	• • Spring	1	90216-
7	C2	709-32-12861	• • Plug	1	90216-
8		07002-21823	• • O-ring	1	90216-
9	C1		• • Spool	1	90216-
10	C2	708-7S-18120	• • Spring	1	90216-
11	C2	708-7S-18310	• • Spacer	1	90216-
12	C2	708-7S-18320	• • Cover	1	90216-
13		07000-E2020	• • O-ring	1	90216-
14		07000-E2025	• • O-ring	1	90216-
15		07000-E2012	• • O-ring	1	90216-
16		01252-60845	• • Bolt, Hexagon Socket Head	4	90216-
	C2	708-7S-01440	• • Valve Assembly, Pilot	1	90216-
17	C2	702-21-56241	• • • Solenoid	1	90216-
18	C2	702-21-55870	• • • O-ring	1	90216-
19	C1		• • • Case	1	90216-
20	C1		• • • Spool	1	90216-
21	C2	702-21-56220	• • • Spring	1	90216-
22	C2	708-21-12541	• • • Plug	1	90216-
23		01252-60616	• • • Bolt, Hexagon Socket Head	2	90216-
24	C2	708-2L-25490	• • • O-ring	1	90216-
25	C2	708-2L-25480	• • • Filter	1	90216-
26	C2	702-21-54180	• • • Screw	2	90216-
27		07000-F1008	• • • O-ring	1	90216-
28	C2	708-7S-18230	• • • O-ring	1	90216-
29		07040-11007	• • • Plug	1	90216-
30		07002-21023	• • • O-ring	1	90216-
31		708-2L-29460	• • • Orifice	1	90216-
32	C2	708-1S-18180	• • • Cover	1	90216-
33		708-7S-18480	• • • Valve	1	90216-
34	C1		• • • Ball	1	90216-
35		01252-60825	• • Bolt, Hexagon Socket Head	4	90216-
36		708-7T-02281	• • Valve, Relief	1	90216-
37		07000-F2016	• • • O-ring	1	90216-

FIG. C0110-005003 Radiator (For Europe Specification) (Inner Parts, Fan Motor)

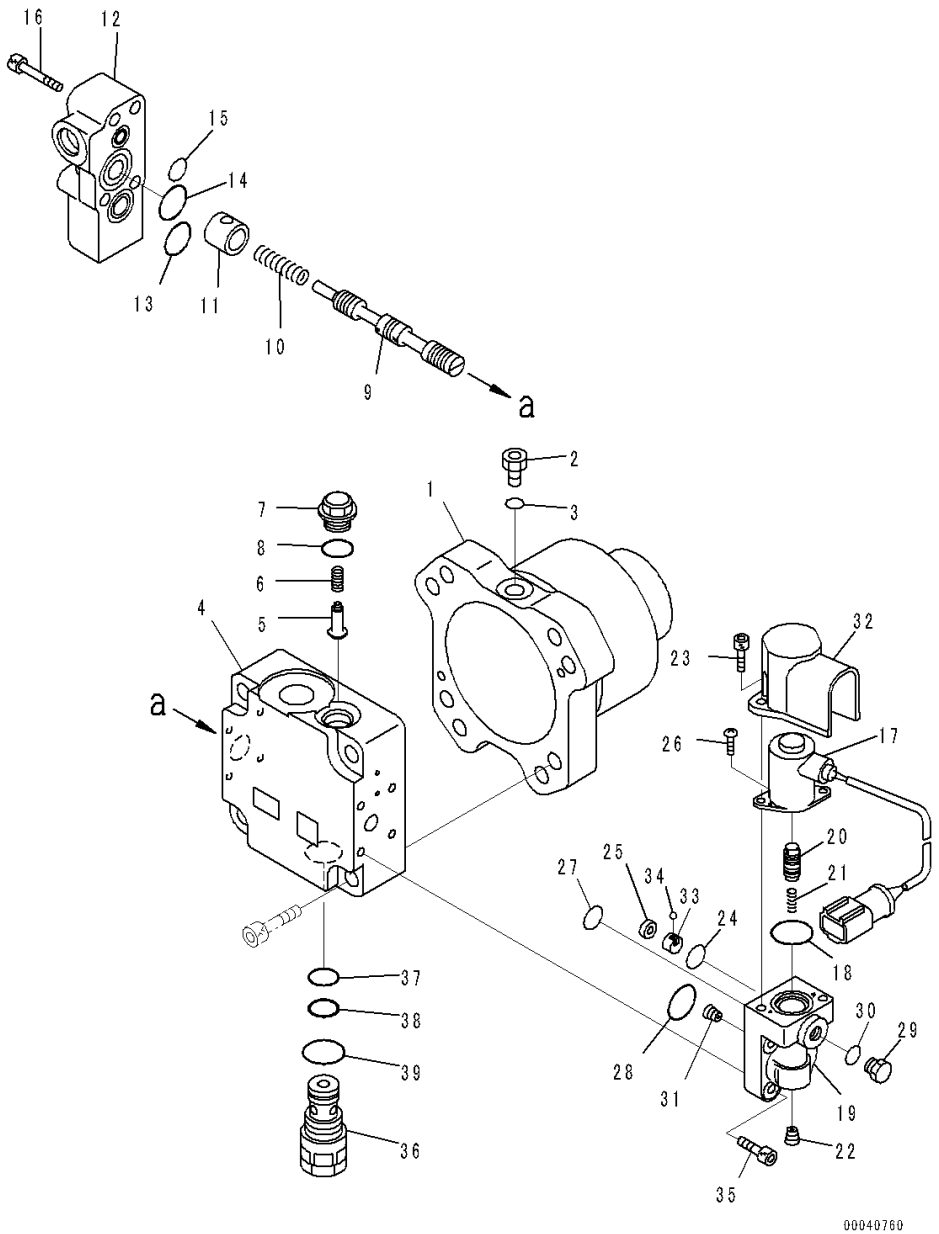

Index	Code	Part Number	Description	Qty	Serial Number
38		07001-02016	• • • Ring, Back-up	1	90216-
39		07002-12434	• • • O-ring	1	90216-

FIG. C0110-005004 Radiator (For Europe Specification) (Fan Motor)

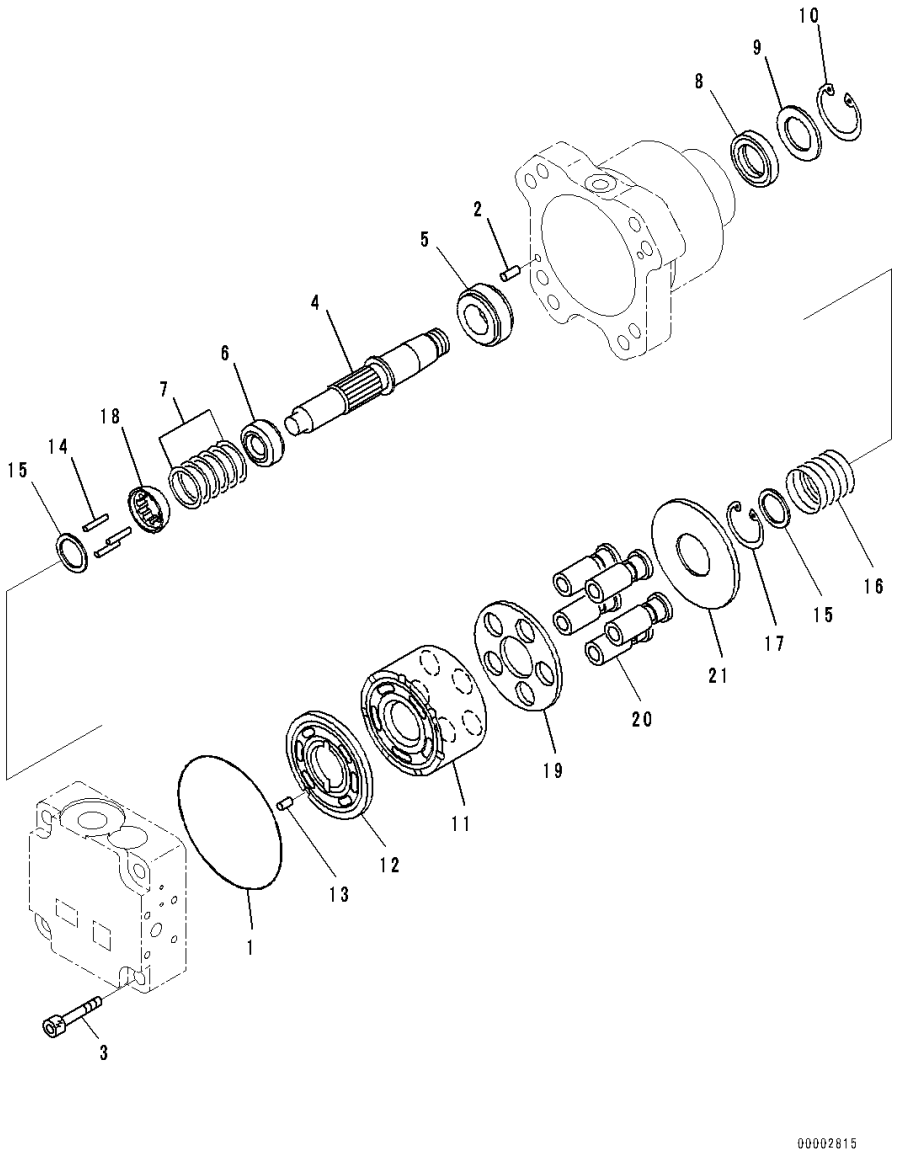

Index	Code	Part Number	Description	Qty	Serial Number
		708-7S-00550	Motor Assembly	1	90216-
1		07000-E2110	• O-ring	1	90216-
2		04020-00616	• Pin, Dowel	2	90216-
3		01252-61255	• Bolt, Hexagon Socket Head	4	90216-
4	C2	708-7S-12330	• Shaft	1	90216-
5	C2	708-7S-12140	• Bearing	1	90216-
6	C2	708-7S-12220	• Bearing	1	90216-
7	C2	708-7S-05110	• Shim Kit	1	90216-
	C1		• • Shim, T=0.85mm	1	90216-
	C1		• • Shim, T=1.05mm	1	90216-
	C1		• • Shim, T=1.25mm	1	90216-
	C1		• • Shim, T=0.75mm	1	90216-
	C1		• • Shim, T=0.95mm	1	90216-
	C1		• • Shim, T=1.15mm	1	90216-
8		708-7T-12330	• Seal, Oil	1	90216-
9		708-1S-11890	• Spacer	1	90216-
10		04065-04518	• Ring, Snap	1	90216-
11	C2	708-7S-13120	• Block	1	90216-
12	C2	708-7S-13260	• Plate, Valve	1	90216-
13	C2	720-68-19610	• Pin	1	90216-
14	C2	708-2L-23360	• Pin	3	90216-
15	C2	708-7S-13530	• Spacer	2	90216-
16	C2	708-7S-13560	• Spring	1	90216-
17		04065-03212	• Ring, Snap	1	90216-
18	C2	708-7S-13550	• Guide, Retainer	1	90216-
19	C2	708-7S-13360	• Retainer, Shoe, Show	1	90216-
20	C2	708-7S-13350	• Piston Subassembly	5	90216-
21	C2	708-7S-13420	• Plate, Thrust	1	90216-

FIG. C0110-005005 Radiator (For Europe Specification) (Mounting) (2/3)

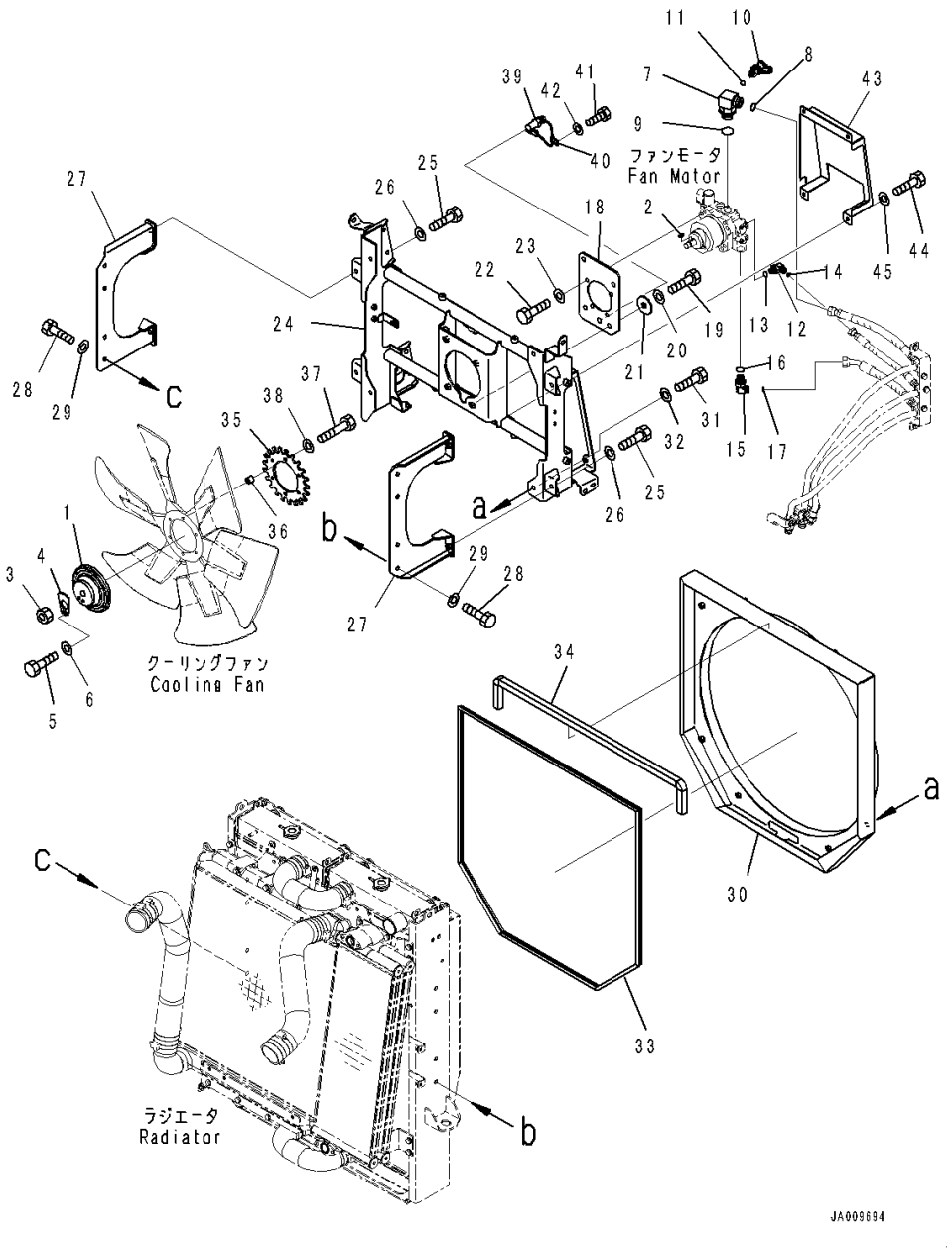

Index	Code	Part Number	Description	Qty	Serial Number
1		423-03-31710	Boss	1	90216-
2		04010-00722	Key	1	90216-
3		01583-12012	Nut	1	90216-
4		154-03-72270	Lock	1	90216-
5		01010-81020	Bolt	1	90216-
6		01643-31032	Washer	1	90216-
7		421-62-41510	Elbow	1	90216-
8		02896-11015	O-ring	1	90216-
9		07002-12434	O-ring	1	90216-
10		799-101-5220	Nipple	1	90216-
11		07002-11023	O-ring	1	90216-
12		02782-10420	Elbow	1	90216-
13		07002-11823	O-ring	1	90216-
14		02896-11012	O-ring	1	90216-
15		02782-10522	Elbow	1	90216-
16		07002-12434	O-ring	1	90216-
17		02896-11015	O-ring	1	90216-
18		421-62-41860	Plate	1	90216-
19		01010-81230	Bolt	4	90216-
20		01643-31232	Washer	4	90216-
21		419-43-17920	Washer	4	90216-
22		01010-81230	Bolt	4	90216-
23		01643-31232	Washer	4	90216-
24		421-62-41810	Bracket	1	90216-
25		01010-D1230	Bolt	4	90216-
26		01643-71232	Washer	4	90216-
27		421-03-41240	Bracket	2	90216-
28		01010-81230	Bolt	8	90216-
29		01643-31232	Washer	8	90216-
30		421-03-41840	Shroud	1	90216-
31		01010-D1245	Bolt	4	90216-
32		01643-71232	Washer	4	90216-
33		421-03-41720	Seal	1	90216-
34		421-03-41510	Seal	1	90216-
35		421-62-41870	Plate	1	90216-
36		175-79-83760	Spacer	6	90216-
37		01010-81060	Bolt	6	90216-
38		01643-31032	Washer	6	90216-
39		7861-93-2330	Sensor, Magnetic Pick-Up, Cooling Fan Speed	1	90216-

FIG. C0110-005005 Radiator (For Europe Specification) (Mounting) (2/3)

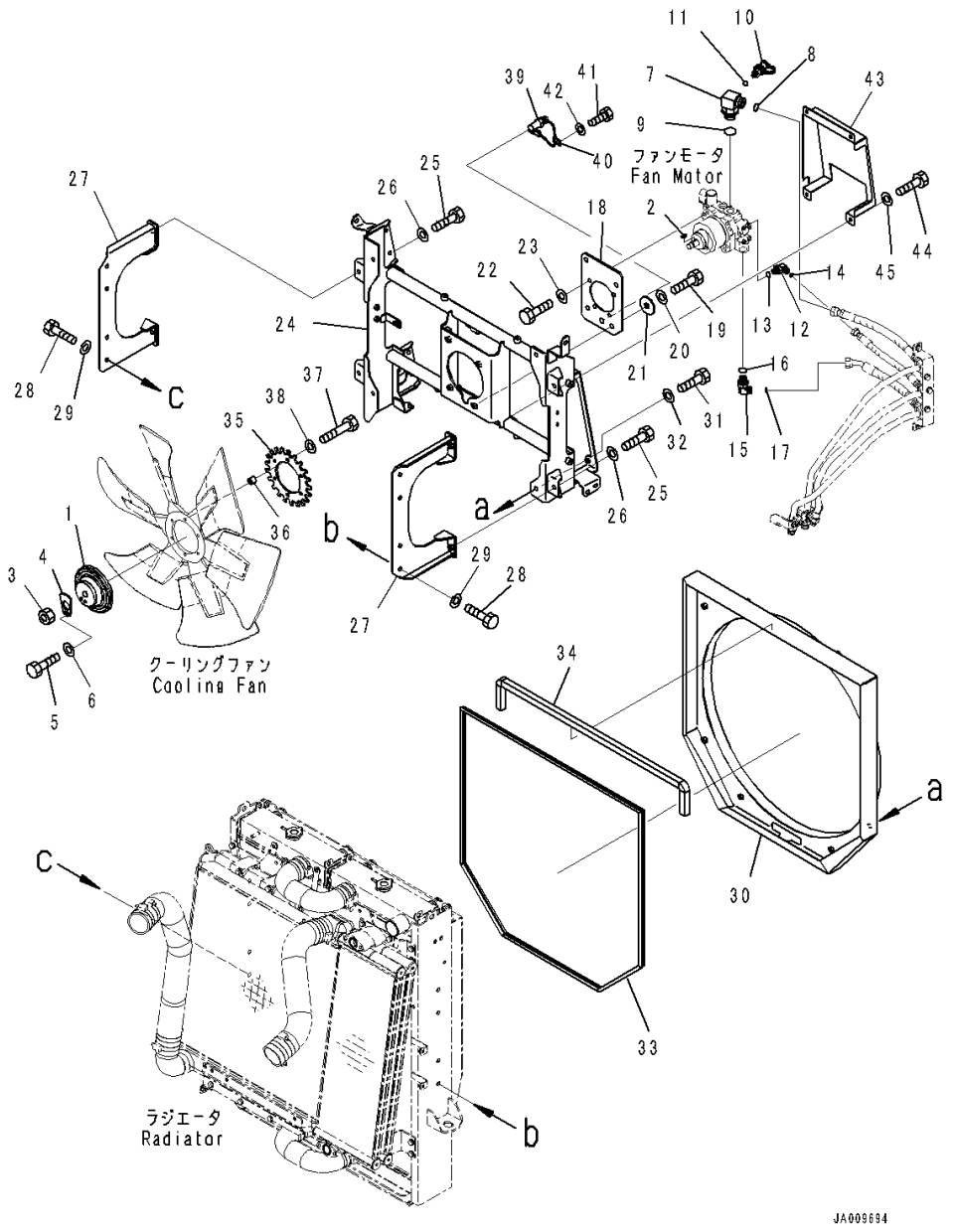

Index	Code	Part Number	Description	Qty	Serial Number
40		04434-50510	Clip	1	90216-
41		01010-81016	Bolt	1	90216-
42		01643-31032	Washer	1	90216-
43		421-62-42510	Cover	1	90216-
44		01010-D1020	Bolt	4	90216-
45		01643-71032	Washer	4	90216-

FIG. C0110-005006 Radiator (For Europe Specification) (Fan Guard)

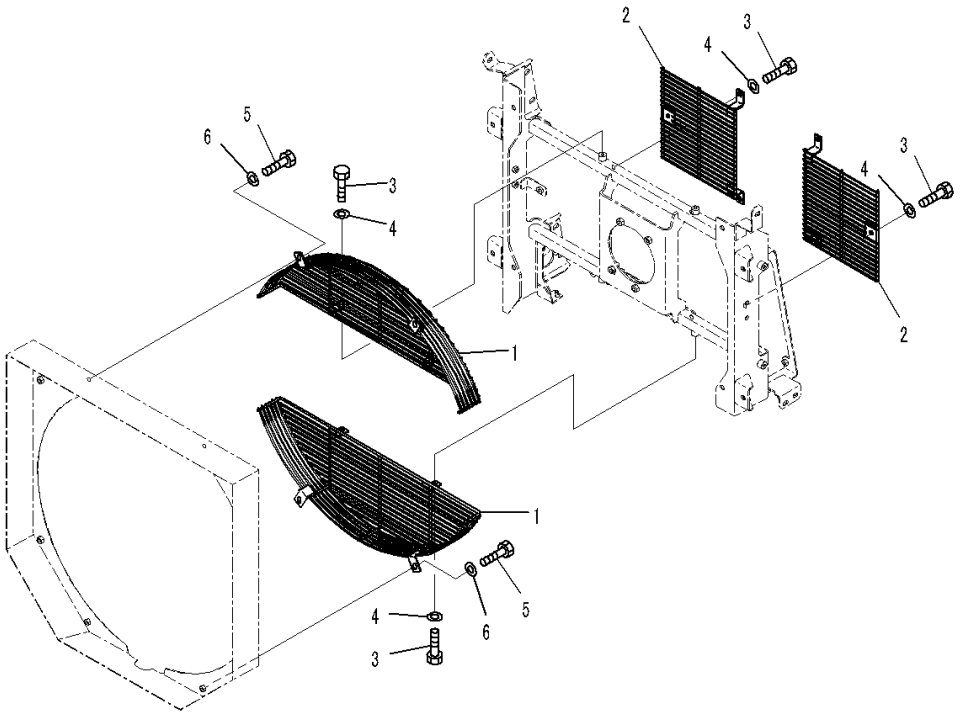

Index	Code	Part Number	Description	Qty	Serial Number
1		421-03-33112	Guard	2	90216-
2		421-03-33122	Guard	2	90216-
3		01010-D1020	Bolt	10	90216-
4		01643-71032	Washer	10	90216-
5		01010-D1050	Bolt	4	90216-
6		01643-71032	Washer	4	90216-

FIG. C0110-005007 Radiator (For Europe Specification) (Backup Alarm)

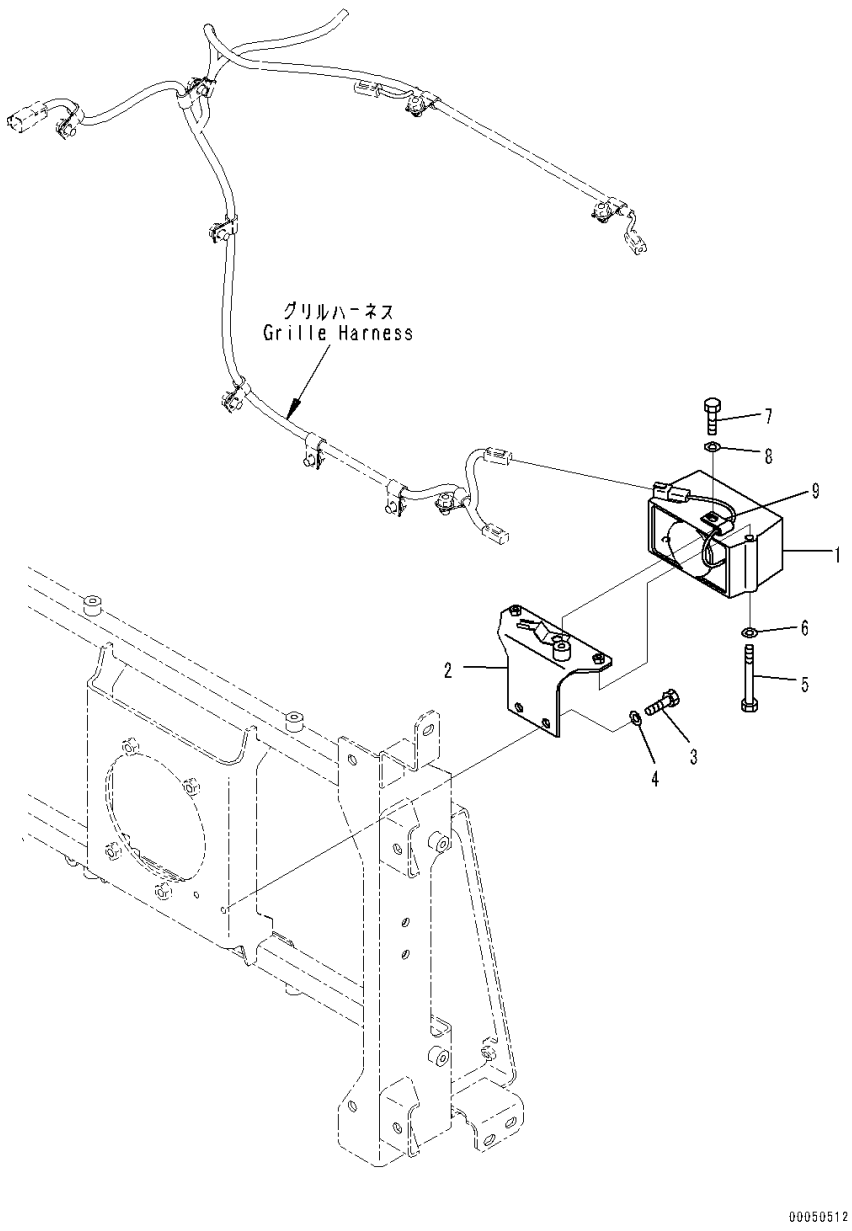

Index	Code	Part Number	Description	Qty	Serial Number
1		08164-B1000	Alarm, Back-up	1	90216-
2		421-06-41110	Bracket	1	90216-
3		01010-D1025	Bolt	2	90216-
4		01643-71032	Washer	2	90216-
5		01010-80895	Bolt	2	90216-
6		01643-70823	Washer	2	90216-
7		01010-81016	Bolt	1	90216-
8		01643-31032	Washer	1	90216-
9		04434-50610	Clip	1	90216-

FIG. C0110-005008 Radiator (For Europe Specification) (Grille)

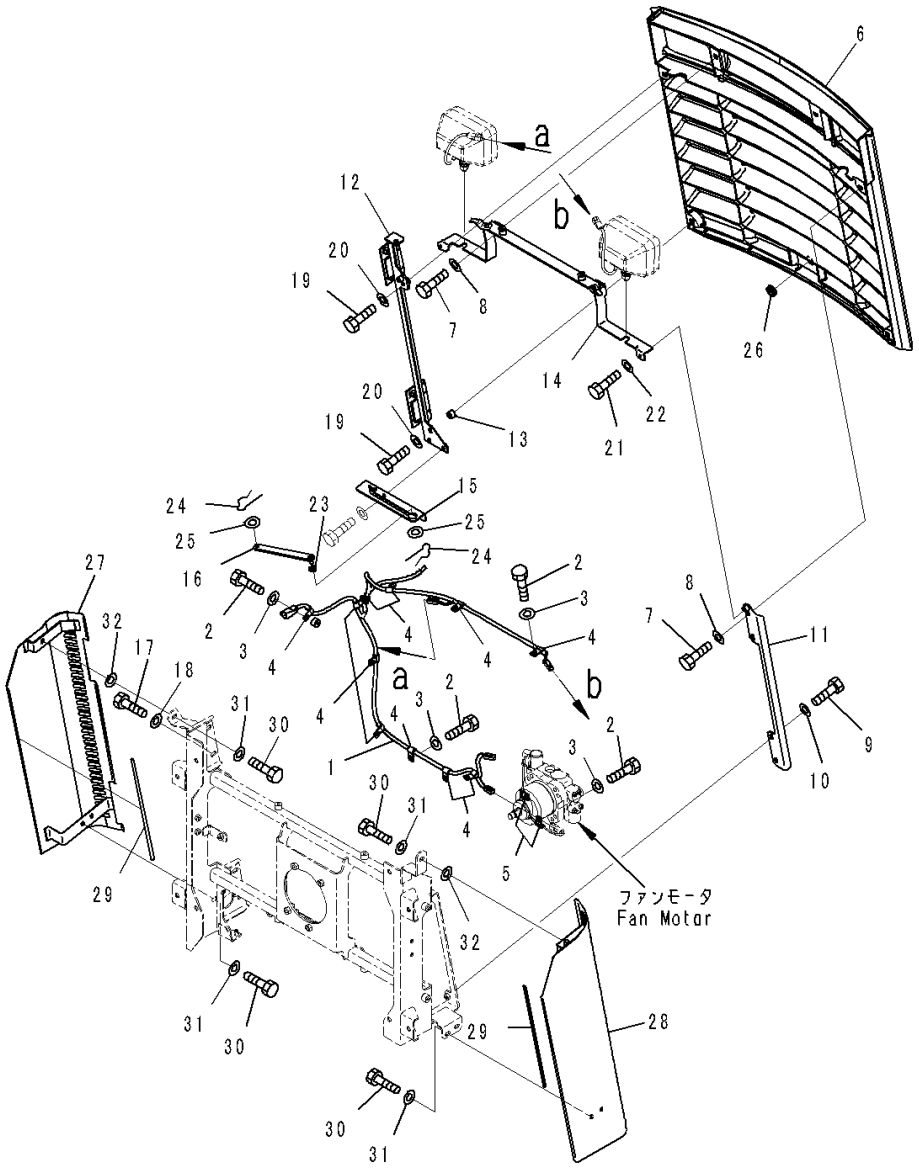

Index	Code	Part Number	Description	Qty	Serial Number
1		421-06-43210	Wiring Harness	1	90216-
2		01010-D1016	Bolt	12	90216-
3		01643-71032	Washer	12	90216-
4		04434-51012	Clip	11	90216-
5		04434-50610	Clip	2	90216-
6		424-54-31823	Grille	1	90216-
7		01010-81020	Bolt	6	90216-
8		01643-31032	Washer	6	90216-
9		01010-D1020	Bolt	2	90216-
10		01643-71032	Washer	2	90216-
11		421-54-42220	Bracket	1	90216-
12		421-54-42230	Bracket	1	90216-
13		195-01-14540	Collar	1	90216-
14		421-06-41130	Bracket	1	90216-
15		421-54-42721	Plate	1	90216-
16		421-54-42711	Stopper	1	90216-
17		01010-81225	Bolt	4	90216-
18		01643-31232	Washer	4	90216-
19		01010-81035	Bolt	2	90216-
20		01643-31032	Washer	2	90216-
21		01010-80820	Bolt	2	90216-
22		01643-30823	Washer	2	90216-
23		08037-01008	Grommet	1	90216-
24		04052-21038	Pin, Snap	2	90216-
25		01640-21016	Washer	2	90216-
26		09415-02110	Cap	1	90216-
27		421-54-42241	Cover	1	90216-
28		421-54-42251	Cover	1	90216-
29		21W-46-47121	Seal	2	90216-
30		01010-D1020	Bolt	6	90216-
31		01643-71032	Washer	6	90216-
32		01643-31032	Washer	2	90216-

FIG. C0110-005009 Radiator (For Europe Specification) (Working Lamp)

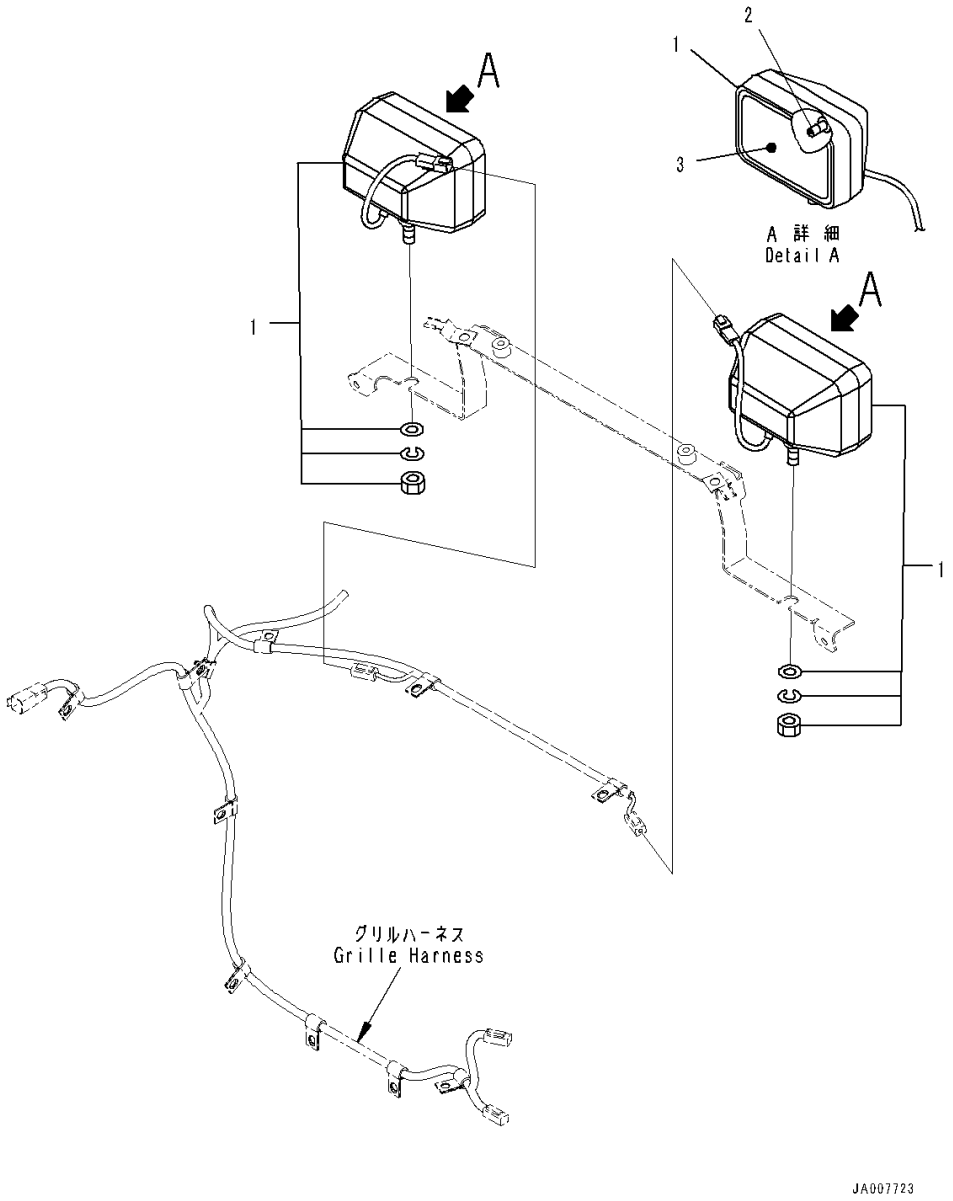

Index	Code	Part Number	Description	Qty	Serial Number
1		22B-06-11690	Lamp Assembly, Working	2	90216-
2		421-06-23330	• Bulb, 70watt	1	90216-
3		22B-06-11990	• Lens	1	90523-

FIG. C0110-005010 Radiator (For Europe Specification) (Fan Motor Piping)

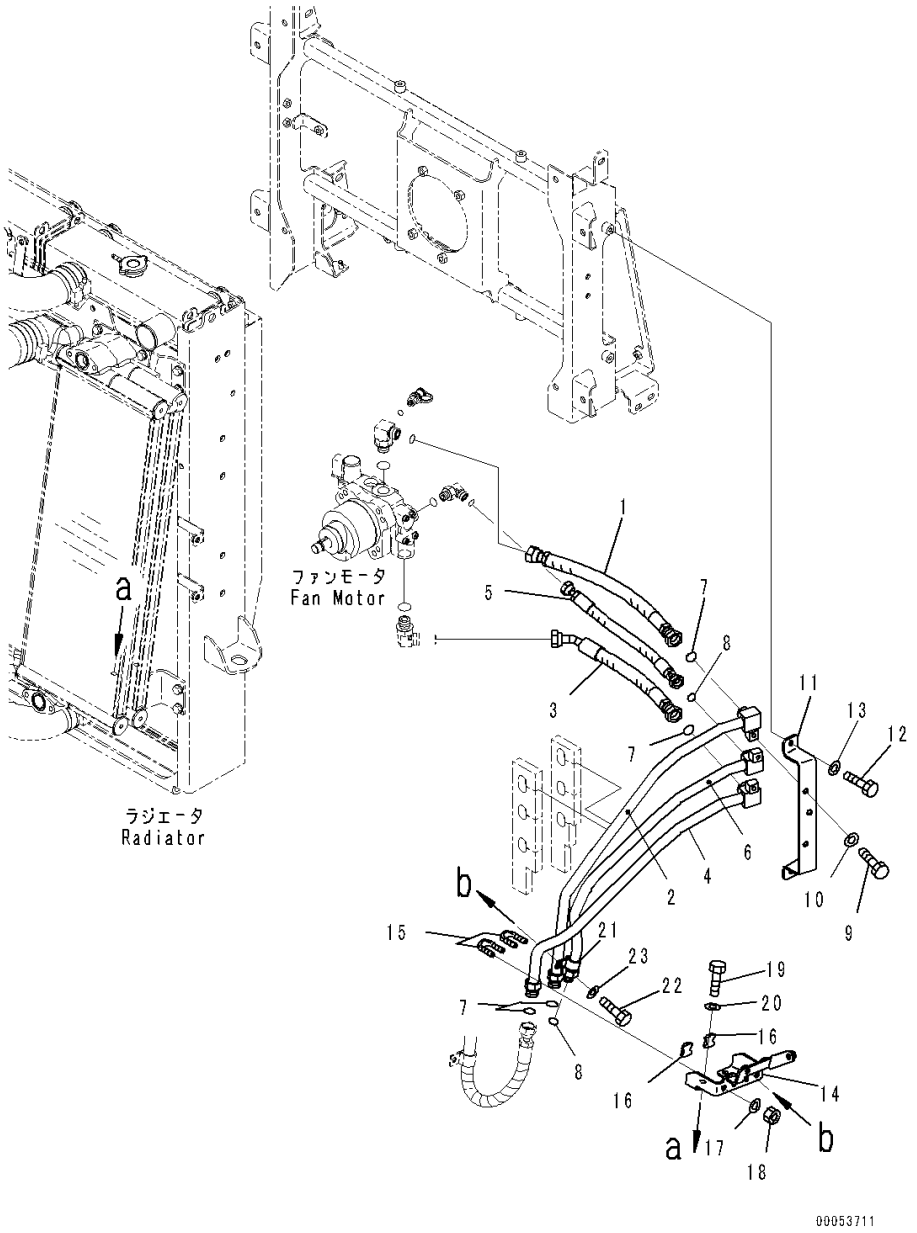

Index	Code	Part Number	Description	Qty	Serial Number
1		421-62-41480	Hose	1	90216-
2		421-62-41120	Tube	1	90216-
3		421-62-41240	Hose	1	90216-
4		421-62-41130	Tube	1	90216-
5		421-62-41490	Hose	1	90216-
6		421-62-41140	Tube	1	90216-
7		02896-11015	O-ring	4	90216-
8		02896-11012	O-ring	2	90216-
9		01010-81020	Bolt	3	90216-
10		01643-31032	Washer	3	90216-
11		421-62-41150	Plate	1	90216-
12		01010-81020	Bolt	2	90216-
13		01643-31032	Washer	2	90216-
14		421-62-41211	Bracket	1	90216-
15		07283-32236	Clip, Pipe	2	90216-
16		07283-52232	Seat	2	90216-
17		01643-31032	Washer	4	90216-
18		01597-01009	Nut	4	90216-
19		01010-81025	Bolt	2	90216-
20		01643-31032	Washer	2	90216-
21		04434-52110	Clip	1	90216-
22		01010-81020	Bolt	1	90216-
23		01643-31032	Washer	1	90216-

FIG. C0110-005011 Radiator (For Europe Specification) (Oil Cooler Piping)

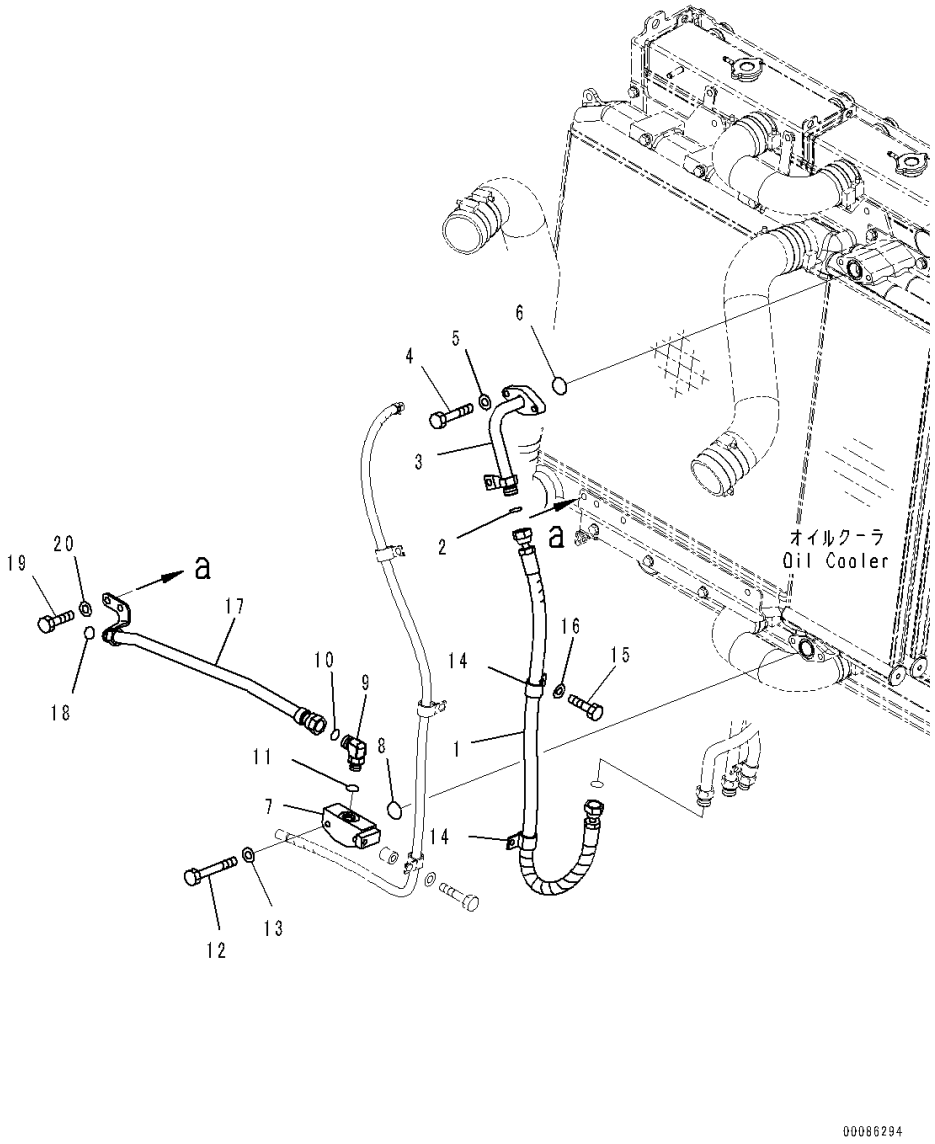

Index	Code	Part Number	Description	Qty	Serial Number
1		421-62-41260	Hose	1	90216-
2		02896-11015	O-ring	1	90216-
3		421-62-44740	Tube	1	90216-
4		01010-81040	Bolt	2	90216-
5		01643-31032	Washer	2	90216-
6		07000-13035	O-ring	1	90216-
7		421-62-41190	Block	1	90216-
8		07000-13035	O-ring	1	90216-
9		02782-10516	Elbow	1	90216-
10		02896-11015	O-ring	1	90216-
11		07002-12034	O-ring	1	90216-
12		01010-81060	Bolt	2	90216-
13		01643-31032	Washer	2	90216-
14		04434-52312	Clip	2	90216-
15		01010-81020	Bolt	1	90216-
16		01643-31032	Washer	1	90216-
17		421-62-41220	Tube	1	90216-
18		02896-11015	O-ring	1	90216-
19		01010-81025	Bolt	2	90216-
20		01643-31032	Washer	2	90216-

FIG. C0110-005012 Radiator (For Europe Specification) (Rear Support)

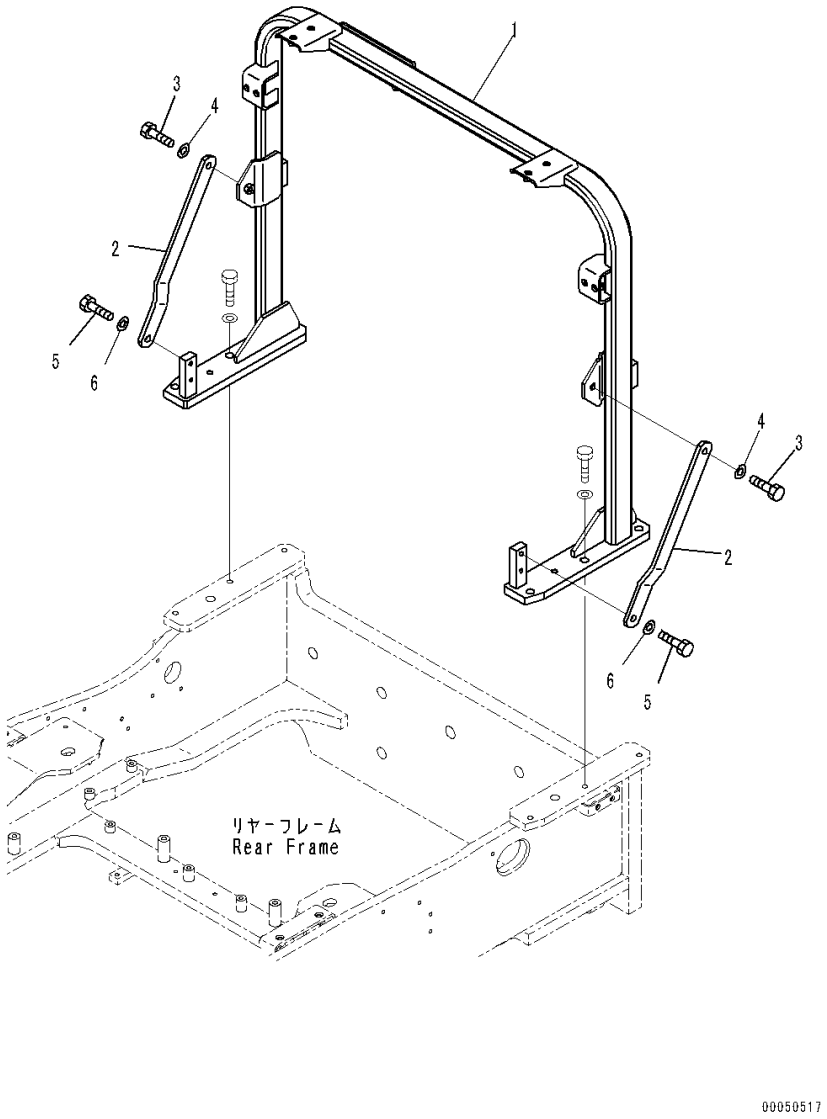

Index	Code	Part Number	Description	Qty	Serial Number
1		421-54-41160	Support	1	90216-
2		421-54-42410	Plate	2	90216-
3		01010-81230	Bolt	2	90216-
4		01643-31232	Washer	2	90216-
5		01010-81225	Bolt	2	90216-
6		01643-31232	Washer	2	90216-

FIG. C0110-005013 Radiator (For Europe Specification) (Condenser)

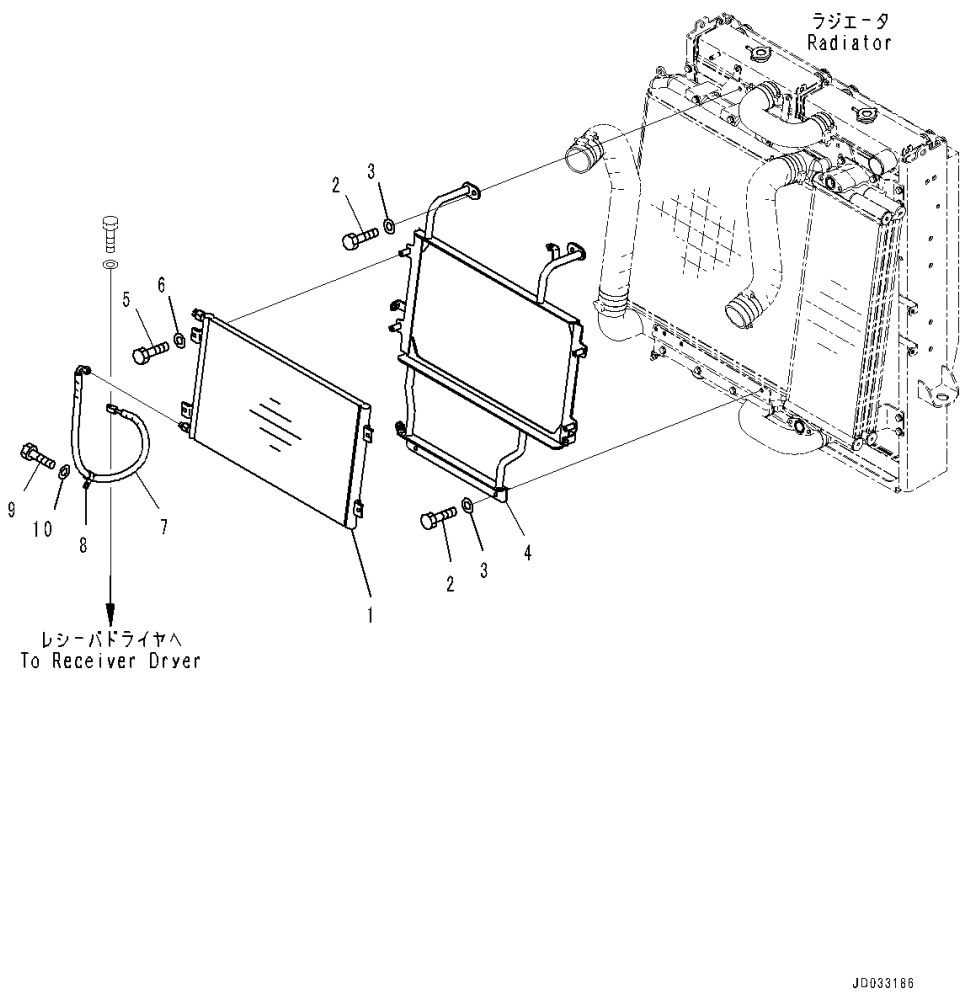

Index	Code	Part Number	Description	Qty	Serial Number
1		421-S62-4120	Condenser	1	90216-
		AN51439-D0031	• O-ring	2	90216-
2		01010-80816	Bolt	4	90216-
3		01643-30823	Washer	4	90216-
4		421-S62-4110	Bracket	1	90216-
5		01010-81025	Bolt	4	90216-
6		01643-31032	Washer	4	90216-
7		421-S62-4160	Hose	1	90216-
8		04434-51910	Clip	1	90216-
9		01010-81020	Bolt	1	90216-
10		01643-31032	Washer	1	90216-

FIG. C0110-005014 Radiator (For Europe Specification) (Breather, Fuel Tank)

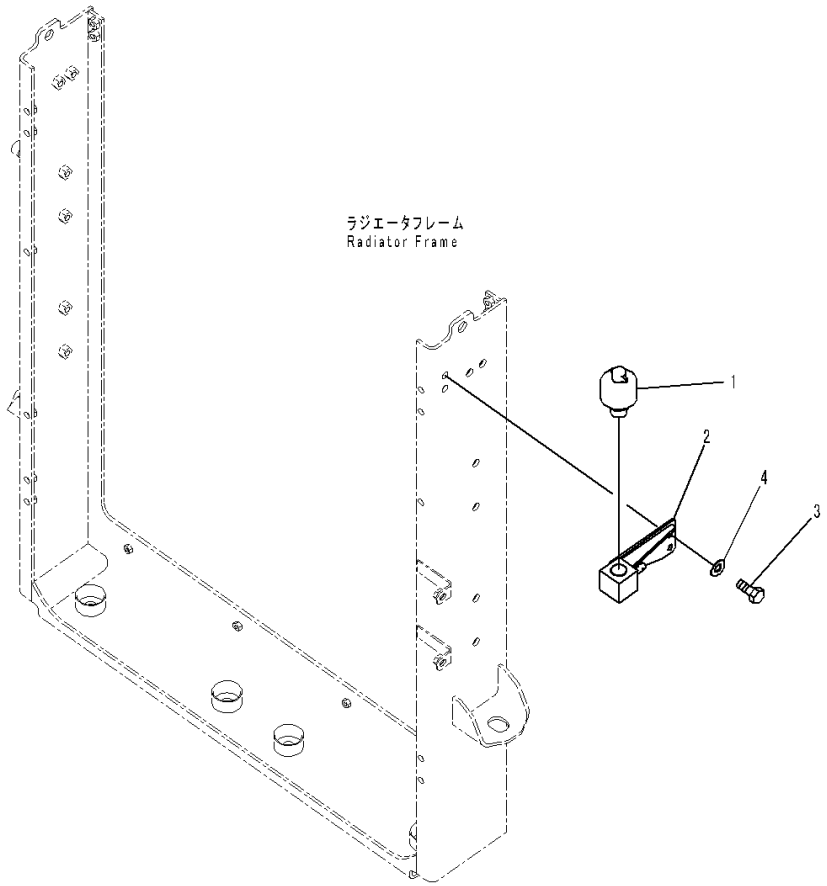

Index	Code	Part Number	Description	Qty	Serial Number
1		195-60-51560	Breather	1	90216-
		421-60-35170	• Element	1	90216-
		421-60-35180	• Cover	1	90216-
		421-60-35190	• Nut	1	90216-
2		421-04-41260	Block	1	90216-
3		01010-81025	Bolt	2	90216-
4		01643-31032	Washer	2	90216-

FIG. C0110-005015 Radiator (For Europe Specification) (Mounting) (3/3)

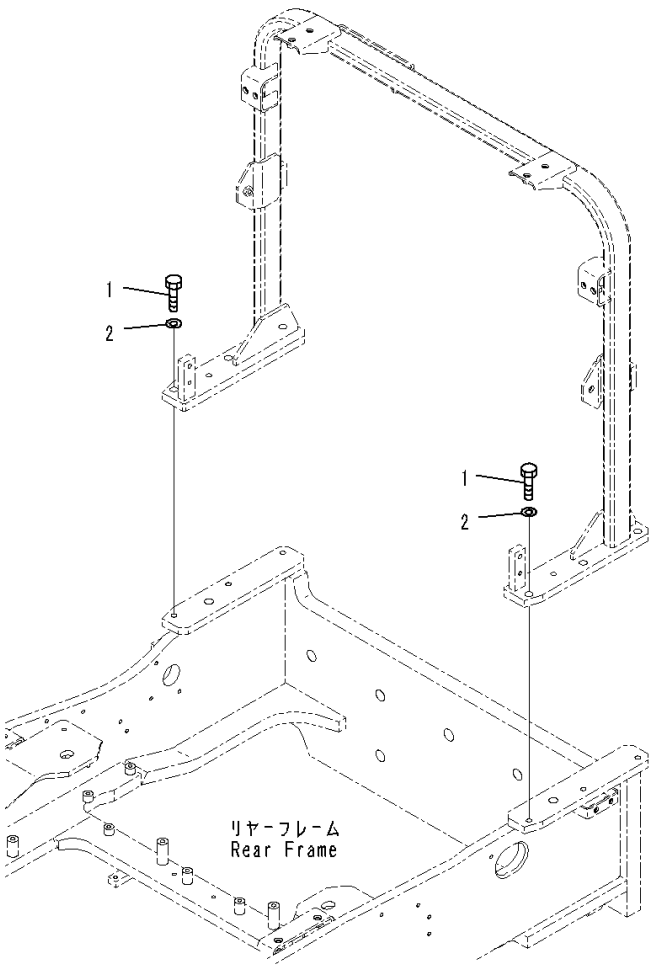

Index	Code	Part Number	Description	Qty	Serial Number
1		01010-81445	Bolt	6	90216-
2		01643-31445	Washer, Flat	6	90216-

FIG. C0110-005016 Radiator (For Europe Specification) (Piping)

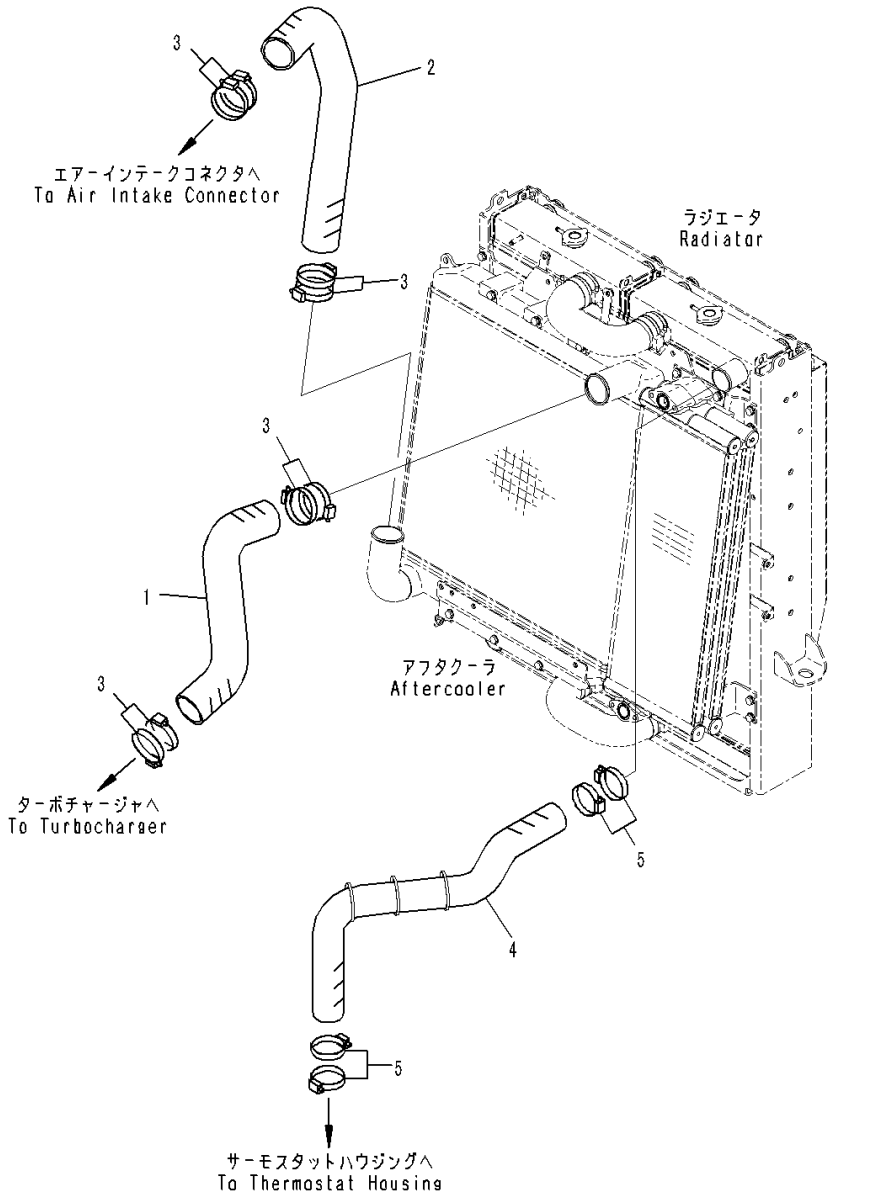

Index	Code	Part Number	Description	Qty	Serial Number
1		421-03-41171	Hose	1	90216-
2		421-03-42180	Hose	1	90216-
3		07299-00080	Clamp, Hose	8	90216-
4		421-03-41191	Hose	1	90216-
5		07289-00070	Clamp	4	90216-

FIG. C0110-005017 Radiator (For Europe Specification) (Torque Converter Cooler Piping)

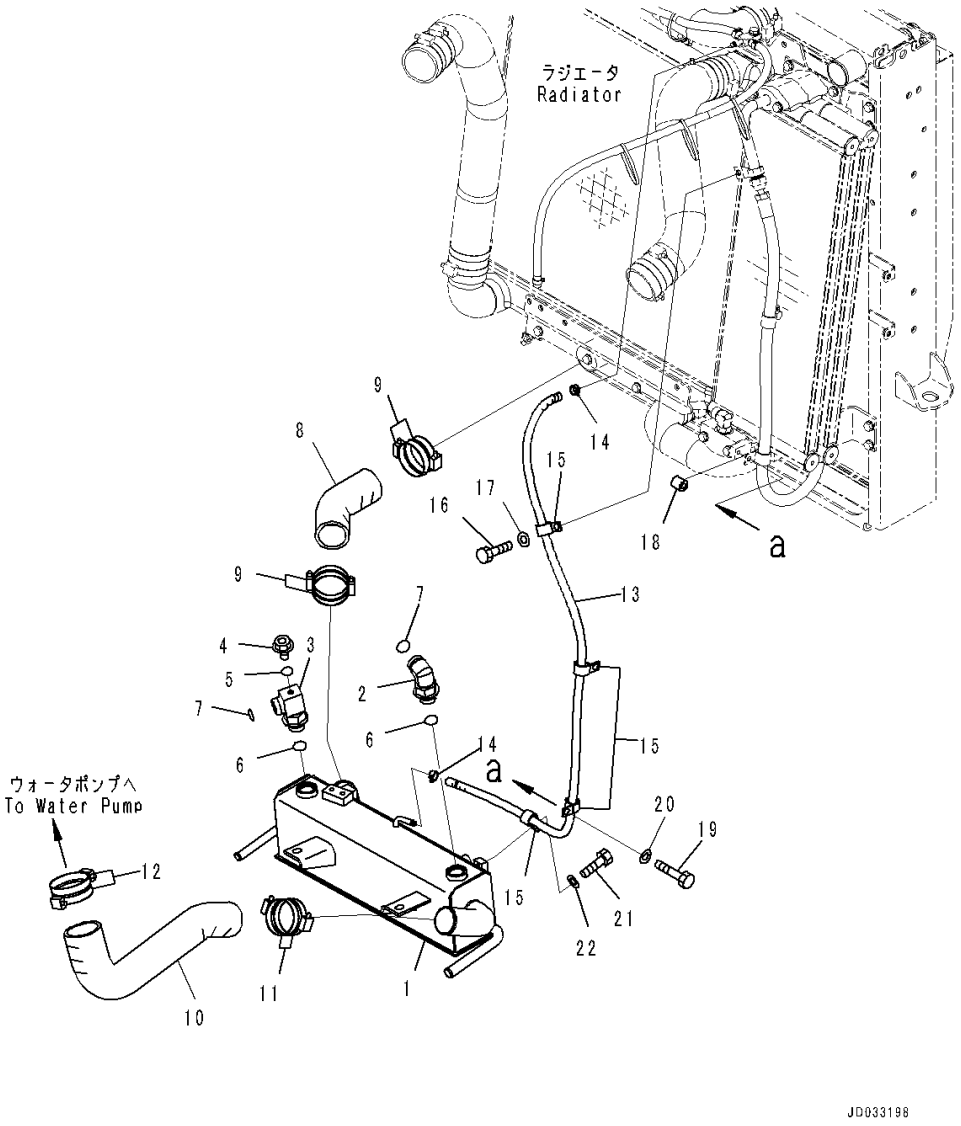

Index	Code	Part Number	Description	Qty	Serial Number
1		421-16-45160	Cooler	1	90216-
2		21W-62-42640	Elbow	1	90216-
3		421-03-42230	Elbow	1	90216-
4		708-8E-16150	Plug	1	90216-
5		07002-11023	O-ring	1	90216-
6		07002-23334	O-ring	2	90216-
7		421-09-31140	O-ring	2	90216-
8		421-03-42250	Hose	1	90216-
9		07289-00070	Clamp	4	90216-
10		421-03-32132	Hose	1	90216-
11		07289-00070	Clamp	2	90216-
12		07289-00080	Clamp	2	90216-
13		421-16-41180	Hose	1	90216-
14		11Y-09-11140	Clip	2	90216-
15		04434-52312	Clip	4	90216-
16		01010-81020	Bolt	1	90216-
17		01643-31032	Washer	1	90216-
18		195-33-11220	Spacer	1	90216-
19		01010-81045	Bolt	1	90216-
20		01643-31032	Washer	1	90216-
21		01010-81016	Bolt	1	90216-
22		01643-31032	Washer	1	90216-

FIG. C0110-005018 Radiator (For Europe Specification) (Sheet)

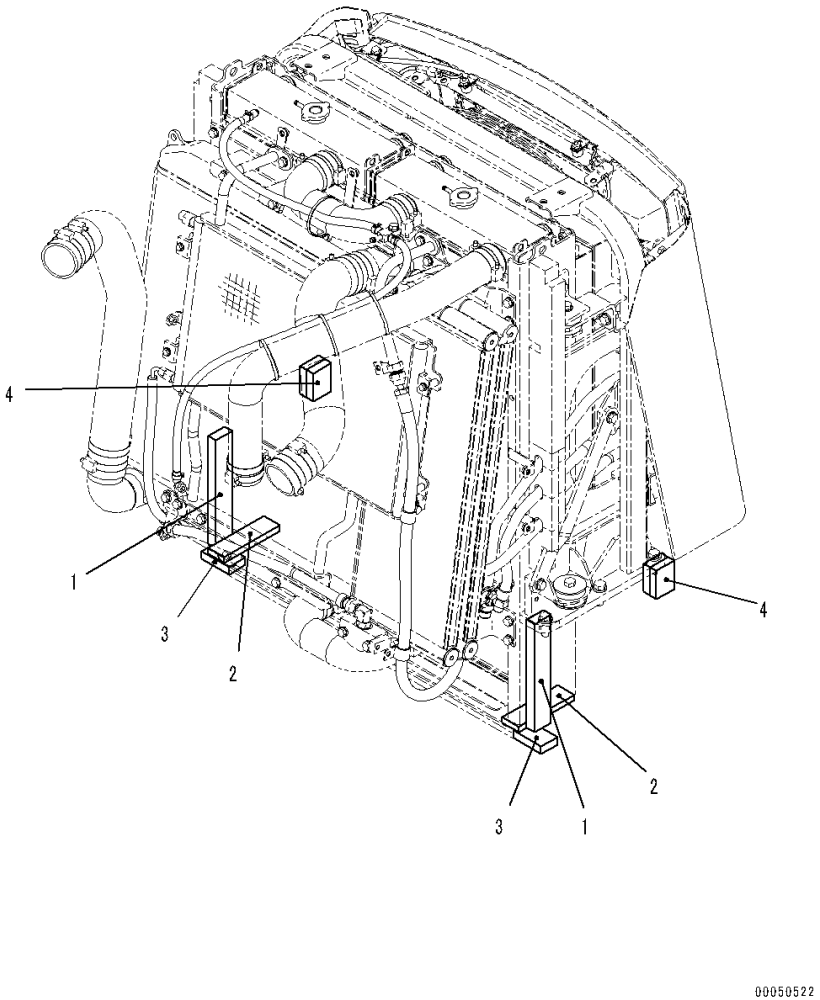

Index	Code	Part Number	Description	Qty	Serial Number
1		421-54-42550	Sheet	2	90216-
2		421-54-42740	Sheet	2	90216-
3		421-54-42750	Sheet	2	90216-
4		421-54-42761	Sheet	2	90216-

FIG. C0110-005019 Radiator (For Europe Specification) (Sub-tank)

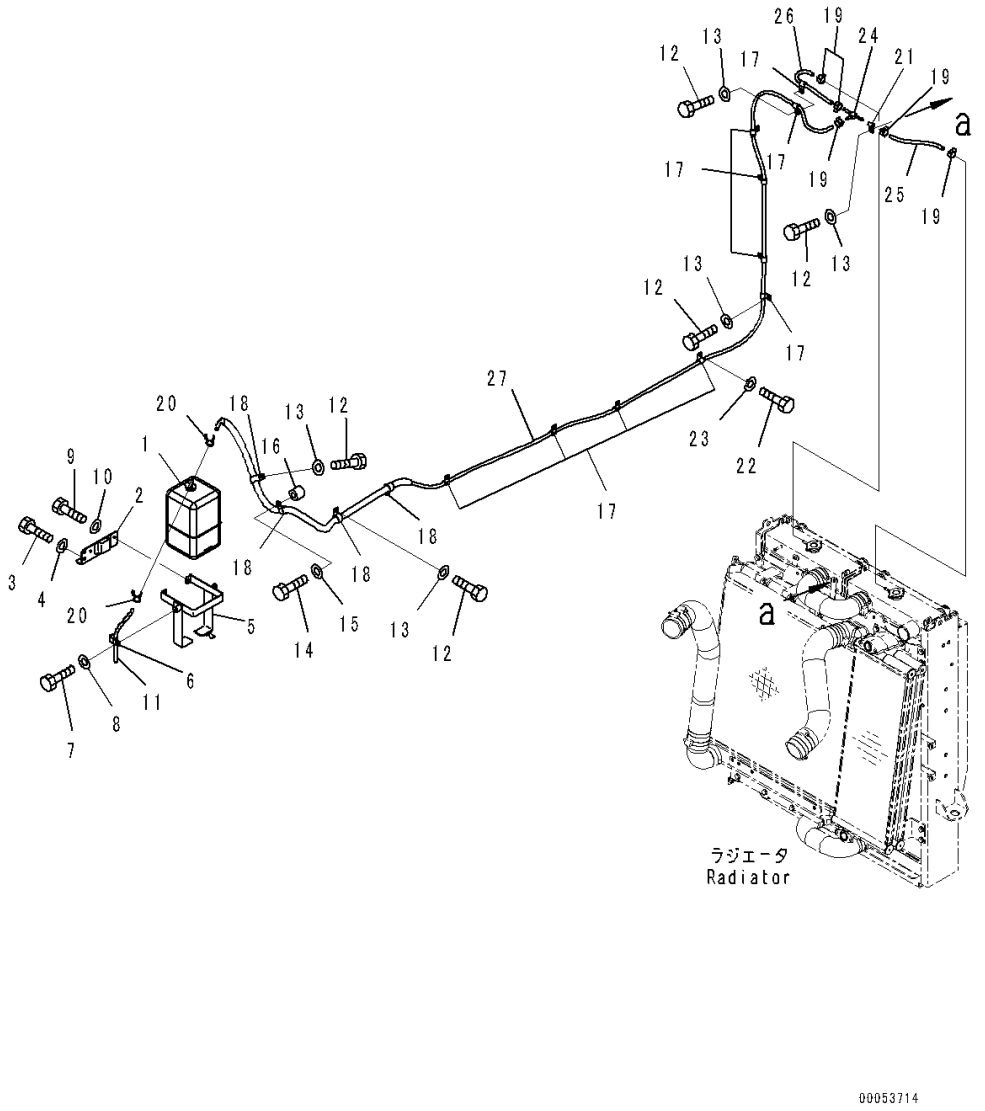

Index	Code	Part Number	Description	Qty	Serial Number
1		421-03-31181	Tank	1	90216-
2		421-03-41610	Bracket	1	90216-
3		01010-81025	Bolt	2	90216-
4		01643-31032	Washer	2	90216-
5		424-03-41440	Bracket	1	90216-
6		04434-51210	Clip	1	90216-
7		01010-81020	Bolt	1	90216-
8		01643-31032	Washer	1	90216-
9		01010-80820	Bolt	2	90216-
10		01643-30823	Washer	2	90216-
11		417-03-21150	Hose	1	90216-
12		01010-81020	Bolt	4	90216-
13		01643-31032	Washer	4	90216-
14		01010-81040	Bolt	1	90216-
15		01643-31032	Washer	1	90216-
16		175-79-83760	Spacer	1	90216-
17		04434-51210	Clip	10	90216-
18		04434-52312	Clip	4	90216-
19		07285-00115	Clip	5	90216-
20		206-03-43340	Clip	2	90216-
21		04434-50810	Clip	1	90216-
22		01010-D1030	Bolt	1	90216-
23		01643-71032	Washer	1	90216-
24		421-03-41340	Joint	1	90216-
25		421-03-41810	Hose	1	90216-
26		421-03-41820	Hose	1	90216-
27		421-03-41831	Hose	1	90216-

FIG. C0110-005020 Radiator (For Europe Specification) (Spill Hose Piping)

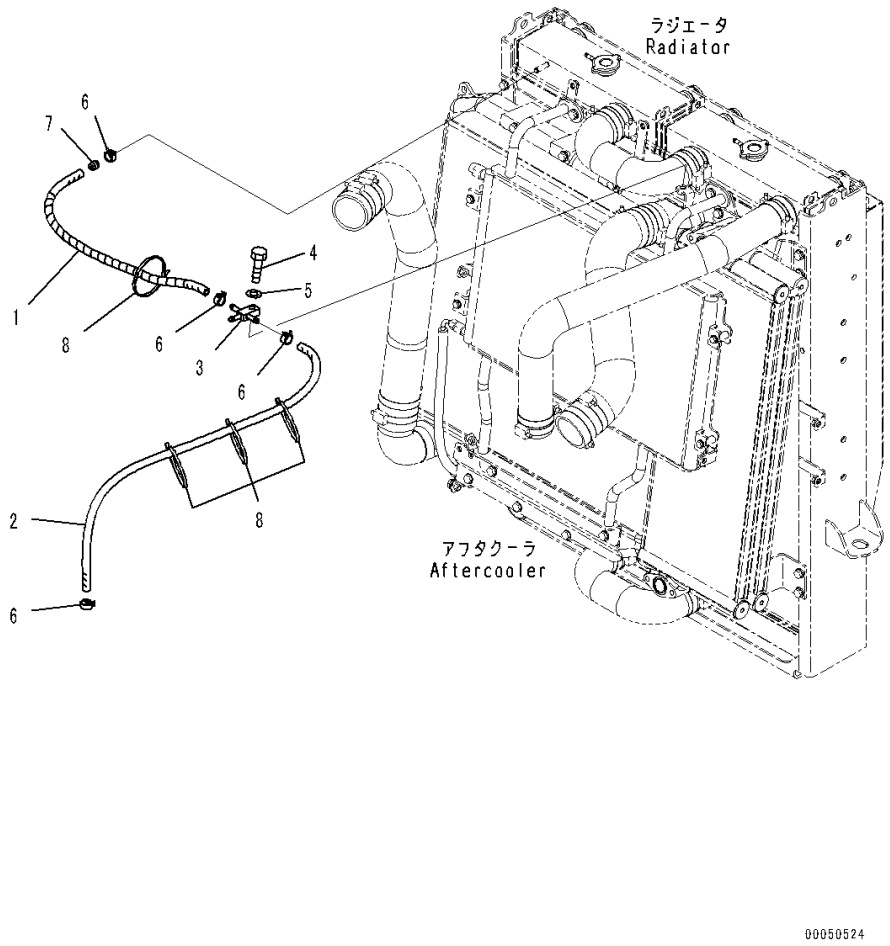

Index	Code	Part Number	Description	Qty	Serial Number
1		421-03-41330	Hose	1	90216-
2		421-03-41521	Hose	1	90216-
3		421-03-41530	Joint	1	90216-
4		01010-81035	Bolt	1	90216-
5		01643-31032	Washer	1	90216-
6		11Y-09-11140	Clip	4	90216-
7		423-03-11531	Tube	1	90216-
8		134-03-61410	Band	4	90216-

FIG. C0110-005021 Radiator (For Europe Specification) (Supply Parts)

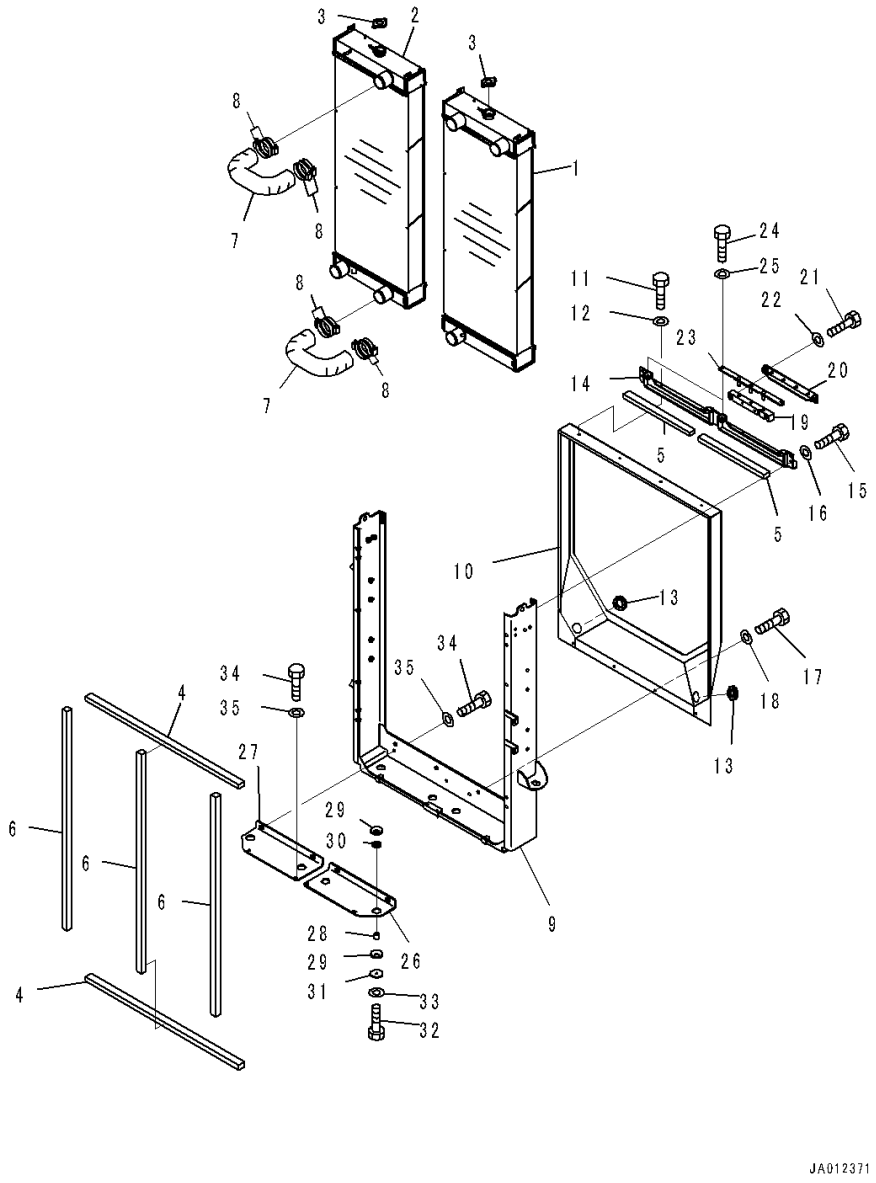

Index	Code	Part Number	Description	Qty	Serial Number
		421-03-05010	Radiator Core Assembly, (Limited Supply)	1	90642-
1		421-03-44180	• Core	1	90642-
2		421-03-44190	• Core	1	90642-
3		416-03-11170	• Cap	2	90642-
4		421-03-41150	• Packing	2	90642-
5		421-03-41650	• Packing	2	90642-
6		421-03-41160	• Packing	3	90642-
7		421-03-44430	• Hose	2	90642-
8		07289-00070	• Clamp	8	90642-
9		421-03-41490	• Frame	1	90642-
10		421-03-41130	• Shroud	1	90642-
11		01010-80820	• Bolt	4	90642-
12		01643-30823	• Washer	4	90642-
13		09415-03614	• Cap	2	90642-
14		421-03-41560	• Bracket	1	90642-
15		01010-81025	• Bolt	4	90642-
16		01643-31032	• Washer	4	90642-
17		01010-80820	• Bolt	4	90642-
18		01643-30823	• Washer	4	90642-
19		423-03-41340	• Rubber	2	90642-
20		423-03-41350	• Bracket	2	90642-
21		01010-81035	• Bolt	4	90642-
22		01643-31032	• Washer	4	90642-
23		423-03-41390	• Plate	2	90642-
24		01010-81025	• Bolt	4	90642-
25		01643-31032	• Washer	4	90642-
26		421-03-41460	• Bracket	1	90642-
27		421-03-41470	• Bracket	1	90642-
28		22T-56-23290	• Spacer	4	90642-
29		423-03-41370	• Cushion	8	90642-
30		421-64-25130	• Cushion	4	90642-
31		11Y-03-32260	• Washer	4	90642-
32		01010-81050	• Bolt	4	90642-
33		01643-31032	• Washer	4	90642-
34		01010-81025	• Bolt	8	90642-
35		01643-31032	• Washer	8	90642-

FIG. C0120-002001 Cooling Piping

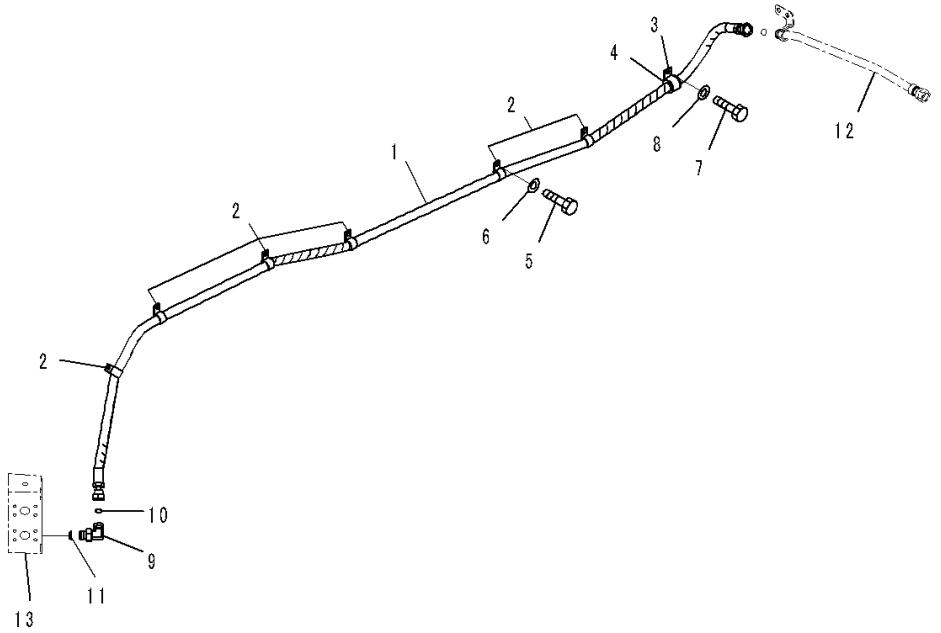

Index	Code	Part Number	Description	Qty	Serial Number
1		421-62-45820	Hose	1	90216-
2		04434-52210	Clip	7	90216-
3		04434-53211	Clip	1	90216-
4		07095-20625	Cushion	1	90216-
5		01010-81020	Bolt	7	90216-
6		01643-31032	Washer	7	90216-
7		01010-D1030	Bolt	1	90216-
8		01643-71032	Washer	1	90216-
9		02782-10522	Elbow	1	90216-
10		02896-11015	O-ring	2	90216-
11		07002-12434	O-ring	1	90216-
12		(421-62-41220)	Tube(Refer to Page 181)		-
		(421-62-41220)	Tube(Refer to Page 204)		-
13		(421-62-45210)	Block(Refer to Page 451)		-
		(421-62-45210)	Block(Refer to Page 456)		-

FUEL SYSTEM

FIG. D0100-002001 Fuel Tank (Fuel Tank Related Parts)

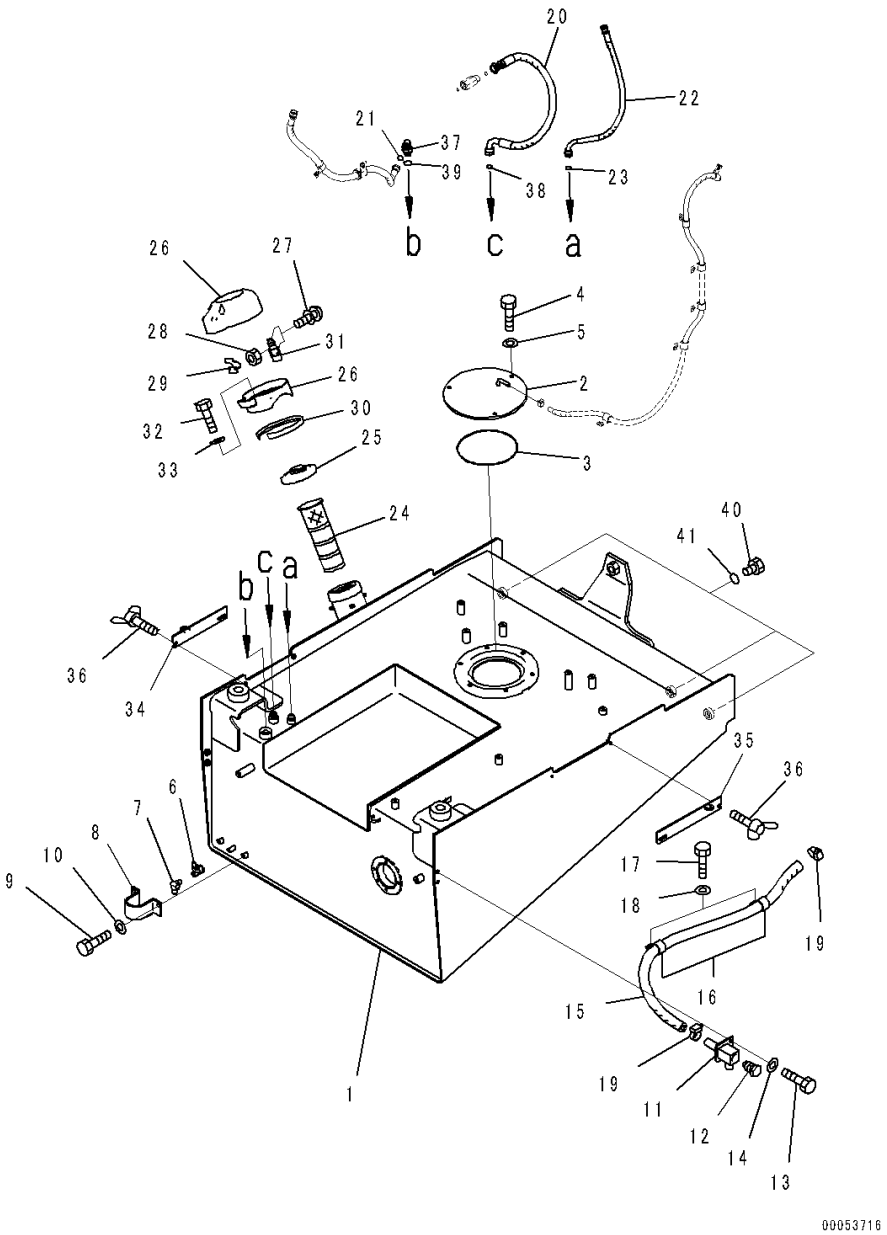

Index	Code	Part Number	Description	Qty	Serial Number
1		421-04-41131	Tank	1	90216-
2		421-04-41150	Cover	1	90216-
3		07000-15200	O-ring	1	90216-
4		01010-81025	Bolt	3	90216-
5		01643-31032	Washer	3	90216-
6		363-04-11130	Valve	1	90216-
7		07217-71013	Elbow	1	90216-
8		423-04-41210	Cover	1	90216-
9		01010-80820	Bolt	2	90216-
10		01643-30823	Washer	2	90216-
11		421-03-32162	Tube	1	90216-
12		424-01-11110	Plug	1	90216-
13		01010-D1025	Bolt	2	90216-
14		01643-71032	Washer	2	90216-
15		07261-22010	Hose	1	90216-
16		04434-53211	Clip	2	90216-
17		01010-81025	Bolt	2	90216-
18		01643-31032	Washer	2	90216-
19		07289-00035	Clamp	2	90216-
20		421-04-41180	Hose	1	90216-
21		02896-11012	O-ring	1	90216-
22		421-04-41160	Hose	1	90216-
23		02896-11009	O-ring	1	90216-
24		17M-04-41190	Strainer	1	90216-
25		423-04-11362	Cap	1	90216-
26		421-04-31161	Cover	1	90216-
27		01023-10308	• Screw	4	90216-
28		01580-10302	• Nut	2	90216-
29		421-04-31280	• Hinge	1	90216-
30		421-04-31210	• Seal	1	90216-
31		421-04-31270	• Hook	1	90216-
32		01010-80616	Bolt	3	90216-
33		01643-30623	Washer	3	90216-
34		421-04-41240	Plate	1	90216-
35		421-04-31240	Plate	1	90216-
36		421-04-31250	Bolt, Wing	4	90216-
37		02782-10315	Elbow	1	90216-
38		02896-11009	O-ring	1	90216-
39		07002-12034	O-ring	1	90216-
40		07040-12412	Plug	3	90216-

FIG. D0100-002001 Fuel Tank (Fuel Tank Related Parts)

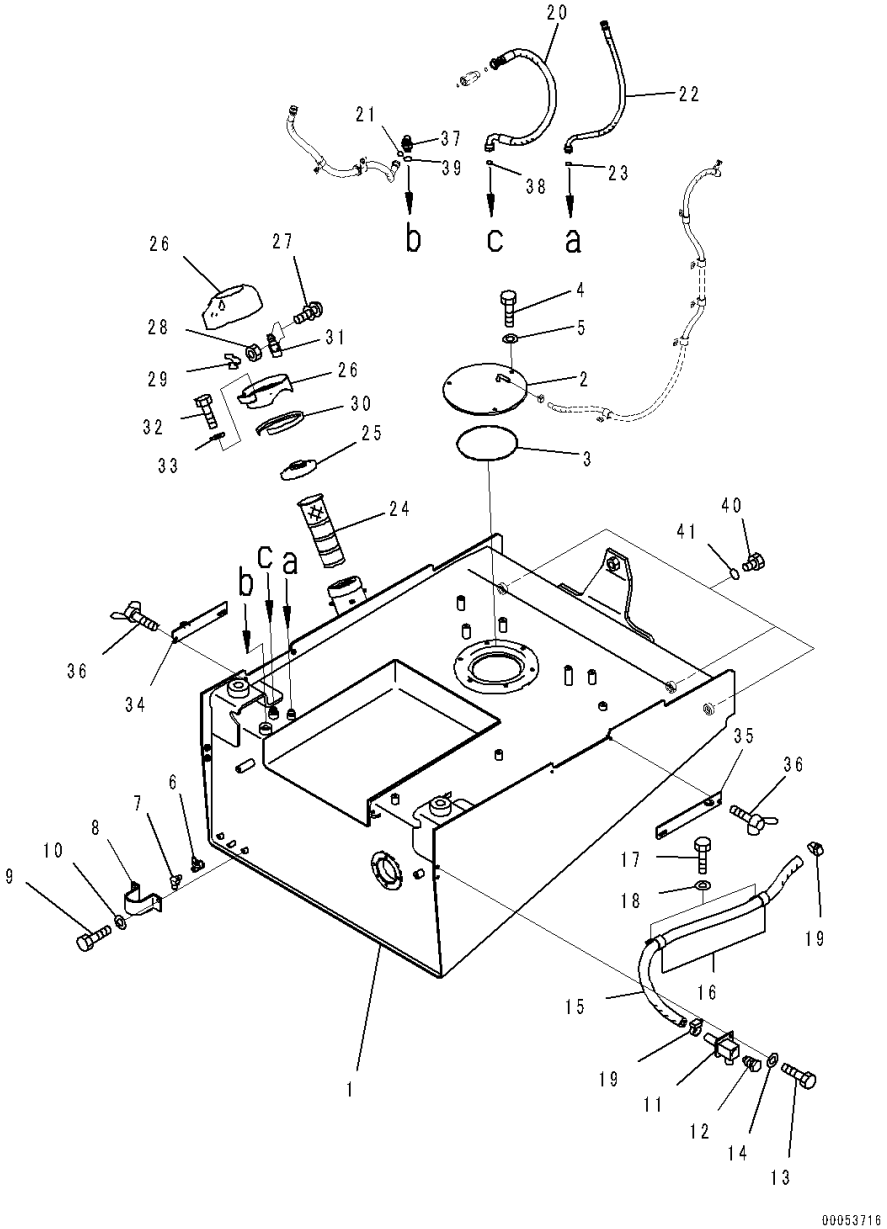

Index	Code	Part Number	Description	Qty	Serial Number
41		07002-12434	O-ring	3	90216-

FIG. D0100-002002 Fuel Tank (Mounting)

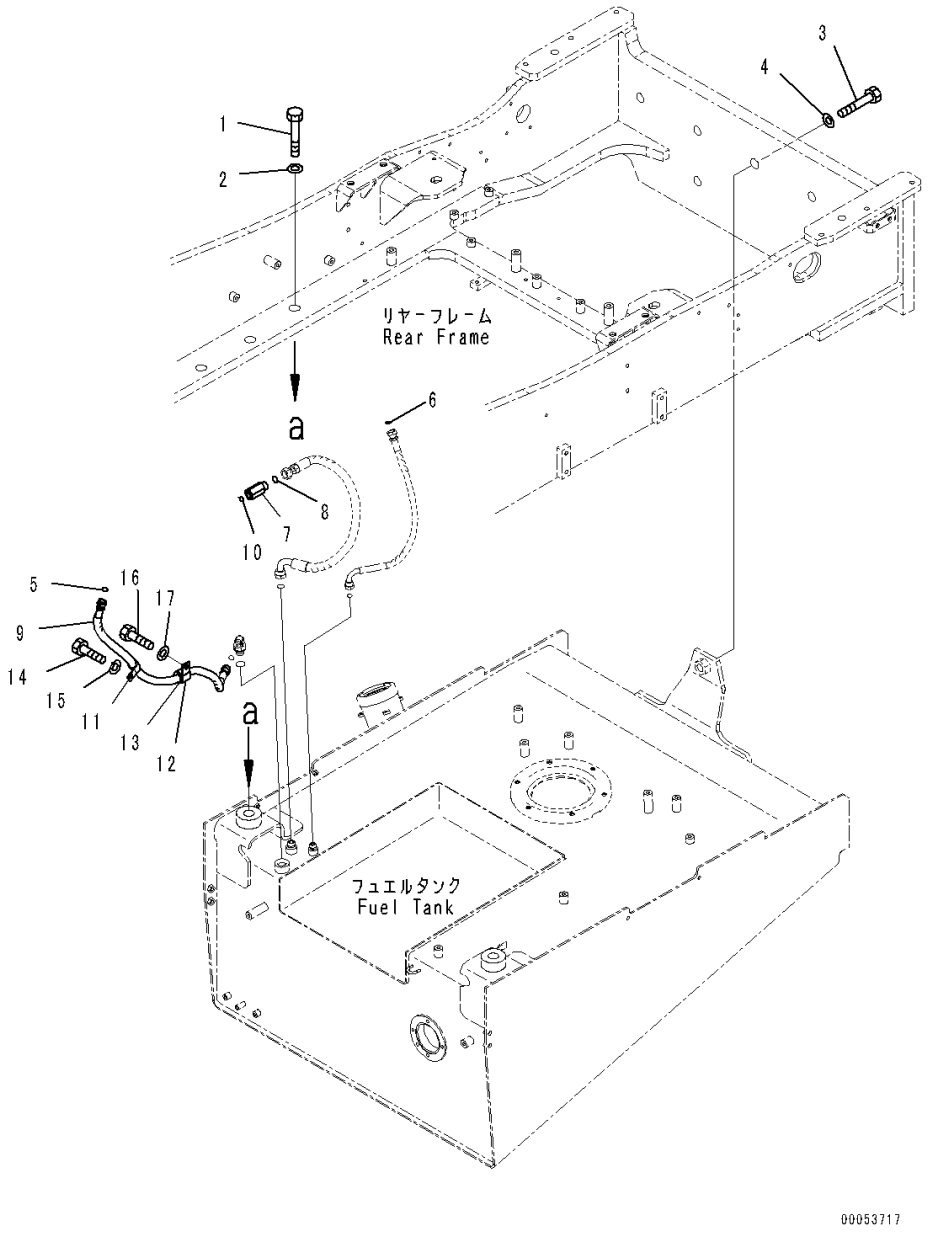

Index	Code	Part Number	Description	Qty	Serial Number
1		01011-82400	Bolt	2	90216-
2		01643-32460	Washer	2	90216-
3		01010-82485	Bolt	1	90216-
4		01643-32460	Washer	1	90216-
5		02896-11012	O-ring	1	90216-
6		02896-11009	O-ring	1	90216-
7		419-18-31430	Union	1	90216-
8		02896-11012	O-ring	1	90216-
9		421-04-41171	Hose	1	90216-
10		02896-11009	O-ring	1	90216-
11		04434-51910	Clip	1	90216-
12		04434-52711	Clip	1	90216-
13		07095-20318	Cushion	1	90216-
14		01010-81020	Bolt	1	90216-
15		01643-31032	Washer	1	90216-
16		01010-81020	Bolt	1	90216-
17		01643-31032	Washer	1	90216-

FIG. D0100-002003 Fuel Tank (Breather)

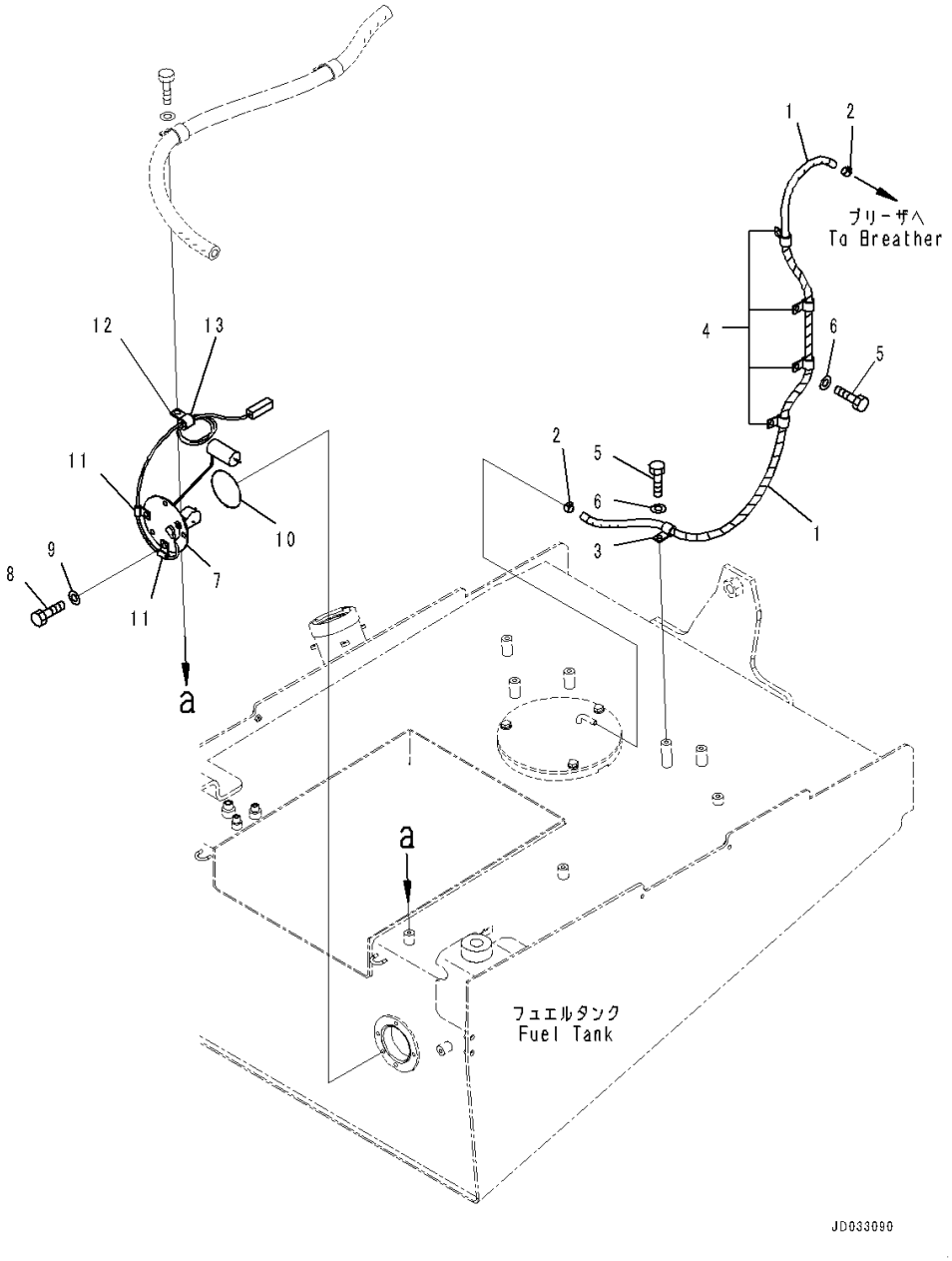

Index	Code	Part Number	Description	Qty	Serial Number
1		421-04-41280	Hose	1	90216-
2		07285-00130	Clip	2	90216-
3		04434-51510	Clip	1	90216-
4		04434-51610	Clip	4	90216-
5		01010-81020	Bolt	5	90216-
6		01643-31032	Washer	5	90216-
7		7861-93-4832	Sensor, Fuel Level	1	90216-
8		01010-81020	Bolt	5	90216-
9		01643-31032	Washer	5	90216-
10		07000-12085	O-ring	1	90216-
11		04434-50610	Clip	2	90216-
12		04434-51710	Clip	1	90216-
13		07095-20211	Cushion	1	90216-

FIG. D0100-002004 Fuel Tank (Clamp)

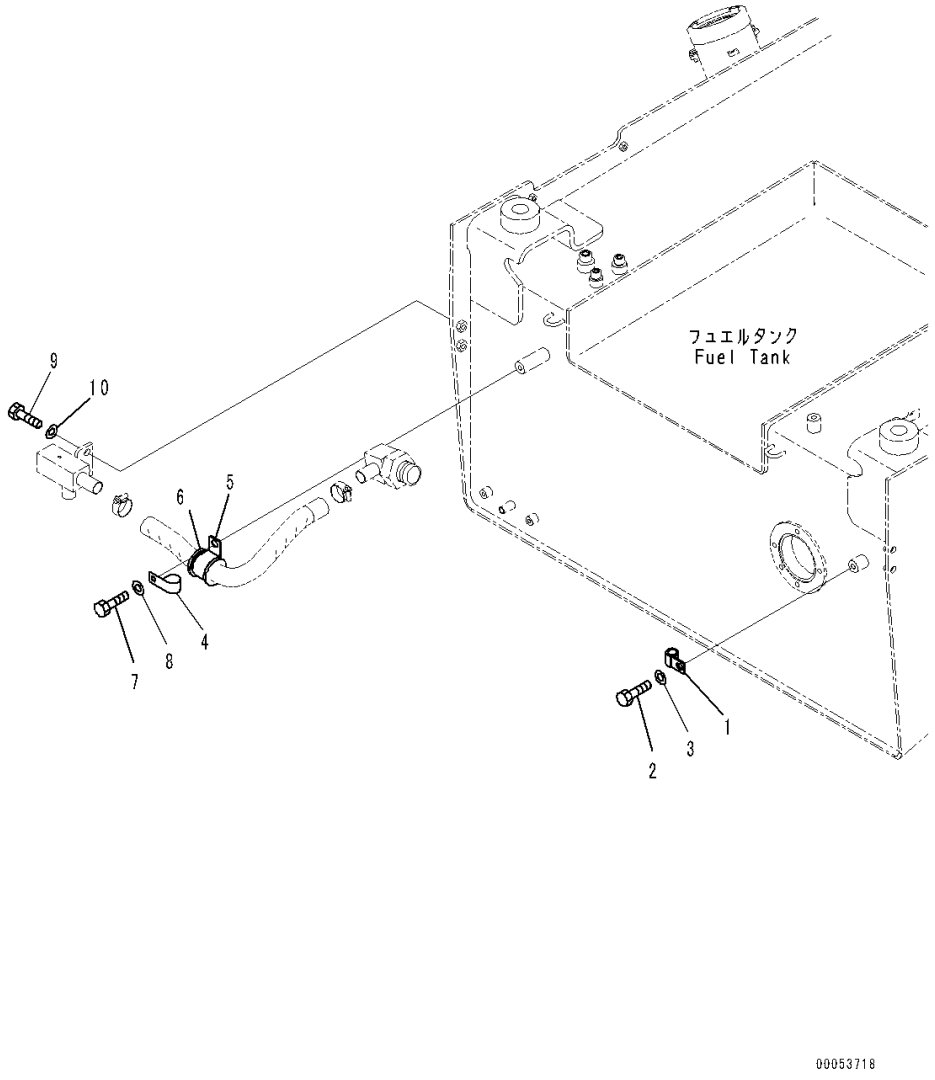

Index	Code	Part Number	Description	Qty	Serial Number
1		04434-51910	Clip	1	90216-
2		01010-81016	Bolt	1	90216-
3		01643-31032	Washer	1	90216-
4		04434-52312	Clip	1	90216-
5		208-06-19170	Clip	1	90216-
6		07095-00630	Cushion	1	90216-
7		01010-81016	Bolt	1	90216-
8		01643-31032	Washer	1	90216-
9		01010-D1025	Bolt	2	90216-
10		01643-71032	Washer	2	90216-

FIG. D0100-003001 Fuel Tank (For Europe Specification) (Fuel Tank Related Parts)

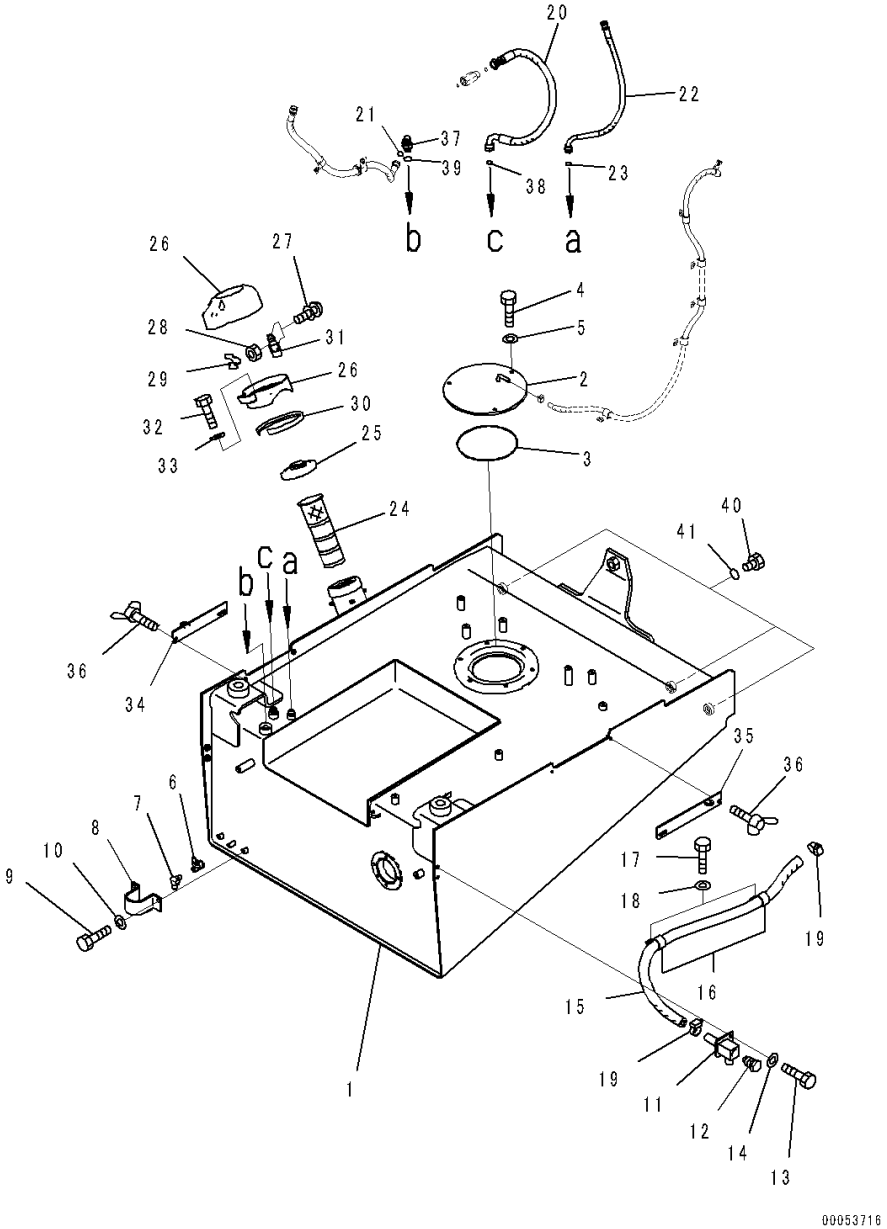

Index	Code	Part Number	Description	Qty	Serial Number
1		421-T80-4110	Tank	1	90216-
2		421-04-41150	Cover	1	90216-
3		07000-15200	O-ring	1	90216-
4		01010-81025	Bolt	3	90216-
5		01643-31032	Washer	3	90216-
6		363-04-11130	Valve	1	90216-
7		07217-71013	Elbow	1	90216-
8		423-04-41210	Cover	1	90216-
9		01010-80820	Bolt	2	90216-
10		01643-30823	Washer	2	90216-
11		421-03-32162	Tube	1	90216-
12		424-01-11110	Plug	1	90216-
13		01010-D1025	Bolt	2	90216-
14		01643-71032	Washer	2	90216-
15		07261-22010	Hose	1	90216-
16		04434-53211	Clip	2	90216-
17		01010-81025	Bolt	2	90216-
18		01643-31032	Washer	2	90216-
19		07289-00035	Clamp	2	90216-
20		421-04-41180	Hose	1	90216-
21		02896-11012	O-ring	1	90216-
22		421-04-41160	Hose	1	90216-
23		02896-11009	O-ring	1	90216-
24		421-04-H1130	Strainer	1	90216-
25		417-04-H1150	Cap	1	90216-
26		421-04-31161	Cover	1	90216-
27		01023-10308	• Screw	4	90216-
28		01580-10302	• Nut	2	90216-
29		421-04-31280	• Hinge	1	90216-
30		421-04-31210	• Seal	1	90216-
31		421-04-31270	• Hook	1	90216-
32		01010-80616	Bolt	3	90216-
33		01643-30623	Washer	3	90216-
34		421-04-41240	Plate	1	90216-
35		421-04-31240	Plate	1	90216-
36		421-04-31250	Bolt, Wing	4	90216-
37		02782-10315	Elbow	1	90216-
38		02896-11009	O-ring	1	90216-
39		07002-12034	O-ring	1	90216-
40		07040-12412	Plug	3	90216-

FIG. D0100-003001 Fuel Tank (For Europe Specification) (Fuel Tank Related Parts)

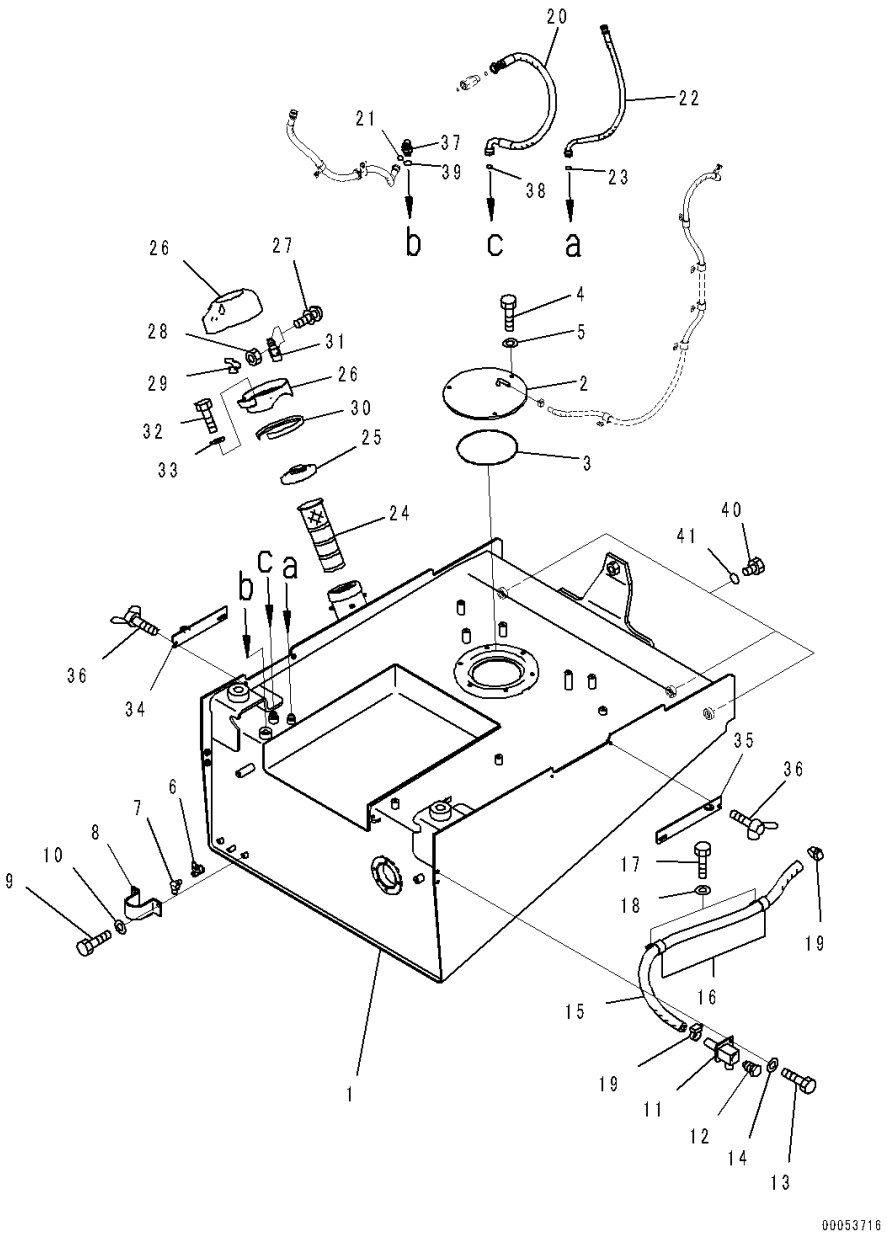

Index	Code	Part Number	Description	Qty	Serial Number
41		07002-12434	O-ring	3	90216-

FIG. D0100-003002 Fuel Tank (For Europe Specification) (Mounting)

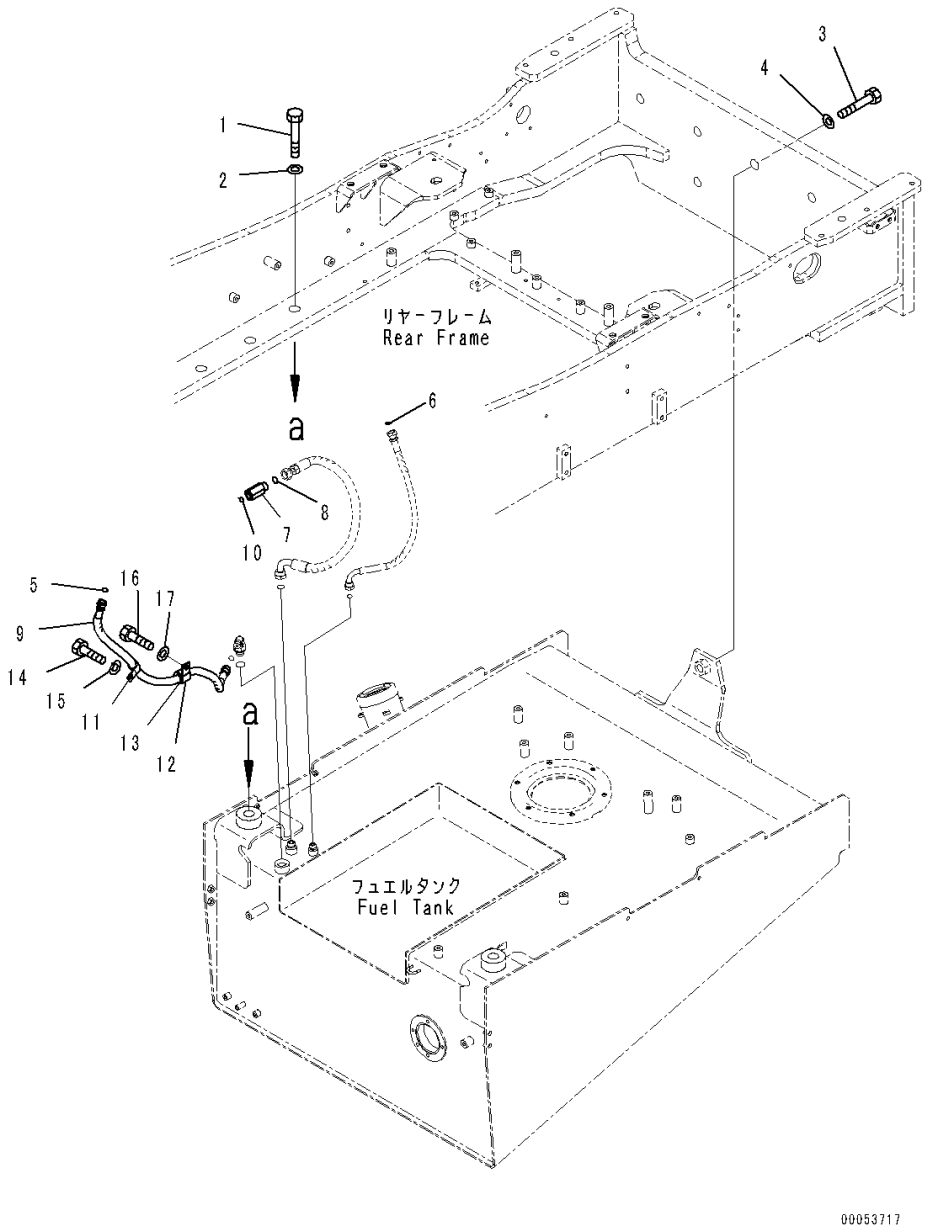

Index	Code	Part Number	Description	Qty	Serial Number
1		01011-82400	Bolt	2	90216-
2		01643-32460	Washer	2	90216-
3		01010-82485	Bolt	1	90216-
4		01643-32460	Washer	1	90216-
5		02896-11012	O-ring	1	90216-
6		02896-11009	O-ring	1	90216-
7		419-18-31430	Union	1	90216-
8		02896-11012	O-ring	1	90216-
9		421-04-41171	Hose	1	90216-
10		02896-11009	O-ring	1	90216-
11		04434-51910	Clip	1	90216-
12		04434-52711	Clip	1	90216-
13		07095-20318	Cushion	1	90216-
14		01010-81020	Bolt	1	90216-
15		01643-31032	Washer	1	90216-
16		01010-81020	Bolt	1	90216-
17		01643-31032	Washer	1	90216-

FIG. D0100-003003 Fuel Tank (For Europe Specification) (Breather)

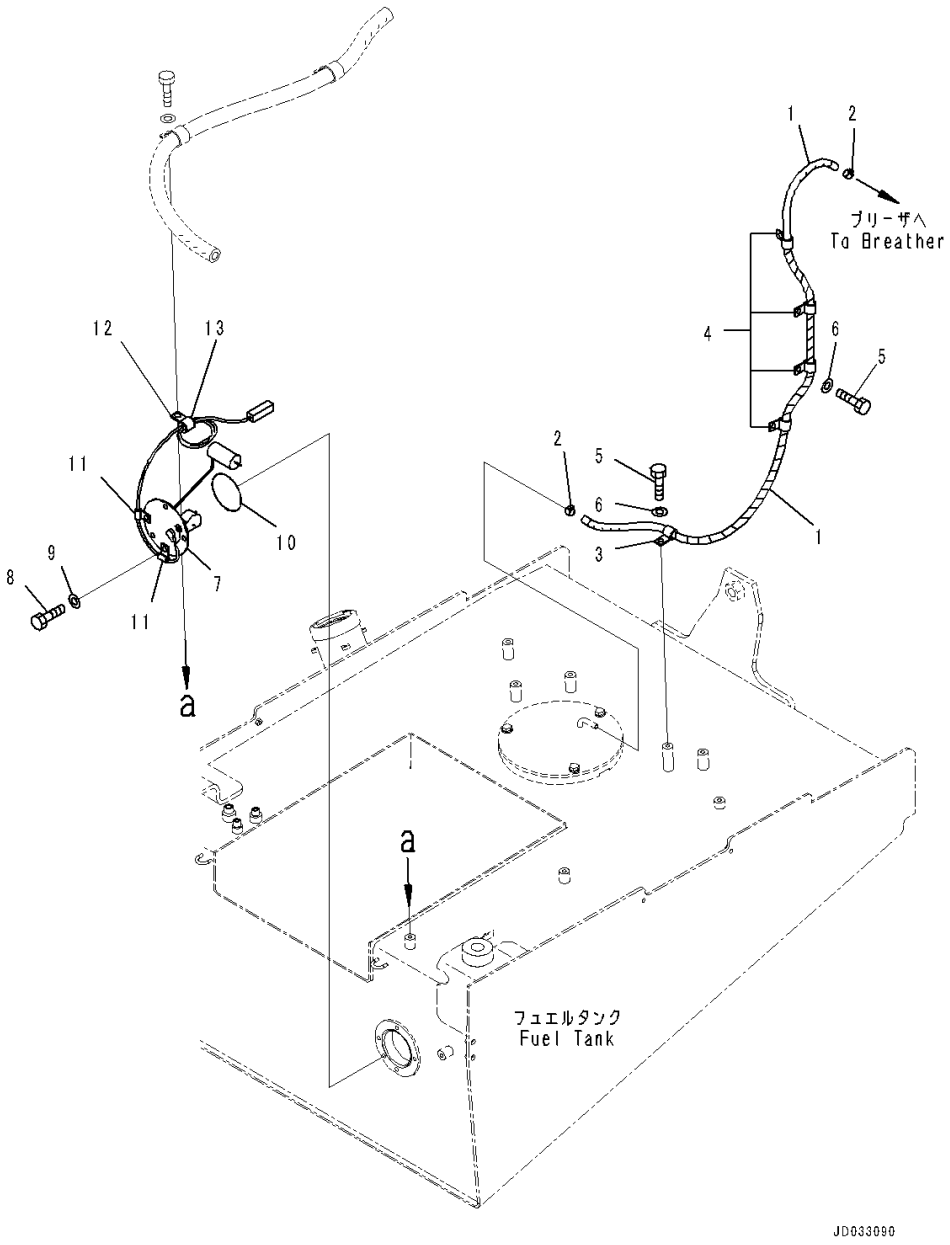

Index	Code	Part Number	Description	Qty	Serial Number
1		421-04-41280	Hose	1	90216-
2		07285-00130	Clip	2	90216-
3		04434-51510	Clip	1	90216-
4		04434-51610	Clip	4	90216-
5		01010-81020	Bolt	5	90216-
6		01643-31032	Washer	5	90216-
7		7861-93-4832	Sensor, Fuel Level	1	90216-
8		01010-81020	Bolt	5	90216-
9		01643-31032	Washer	5	90216-
10		07000-12085	O-ring	1	90216-
11		04434-50610	Clip	2	90216-
12		04434-51710	Clip	1	90216-
13		07095-20211	Cushion	1	90216-

FIG. D0100-003004 Fuel Tank (For Europe Specification) (Clamp)

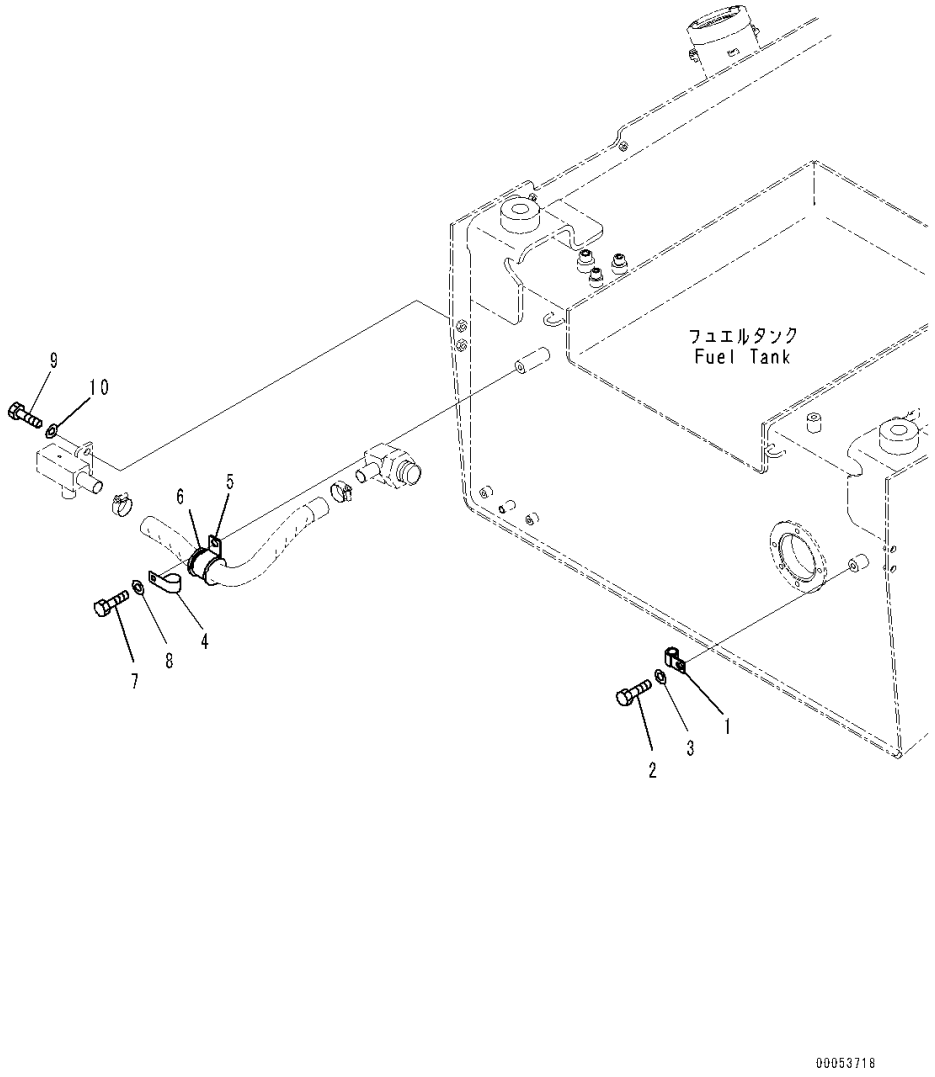

Index	Code	Part Number	Description	Qty	Serial Number
1		04434-51910	Clip	1	90216-
2		01010-81016	Bolt	1	90216-
3		01643-31032	Washer	1	90216-
4		04434-52312	Clip	1	90216-
5		208-06-19170	Clip	1	90216-
6		07095-00630	Cushion	1	90216-
7		01010-81016	Bolt	1	90216-
8		01643-31032	Washer	1	90216-
9		01010-D1025	Bolt	2	90216-
10		01643-71032	Washer	2	90216-

ELECTRICAL SYSTEM

FIG. E0110-002001 Battery

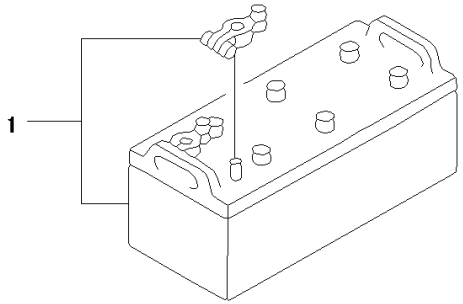

PEE4875

Index	Code	Part Number	Description	Qty	Serial Number
1		08000-32220	Battery, Wet, 165G51	2	90216-
		08000-00000	Terminal, (+)	2	90216-
		08000-00001	Terminal, (-)	2	90216-

FIG. E0110-001001 Battery (Large Capacity)

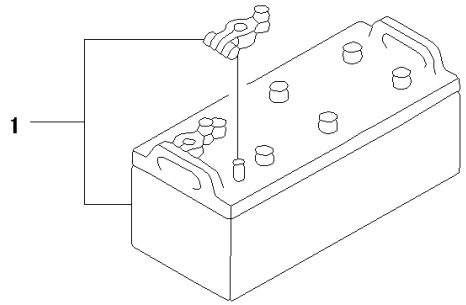

PEE4875

Index	Code	Part Number	Description	Qty	Serial Number
1		6995-81-3260	Battery, Wet, 195G51	2	90216-

FIG. E0120-008001 Battery Box (Cover, L.H.)

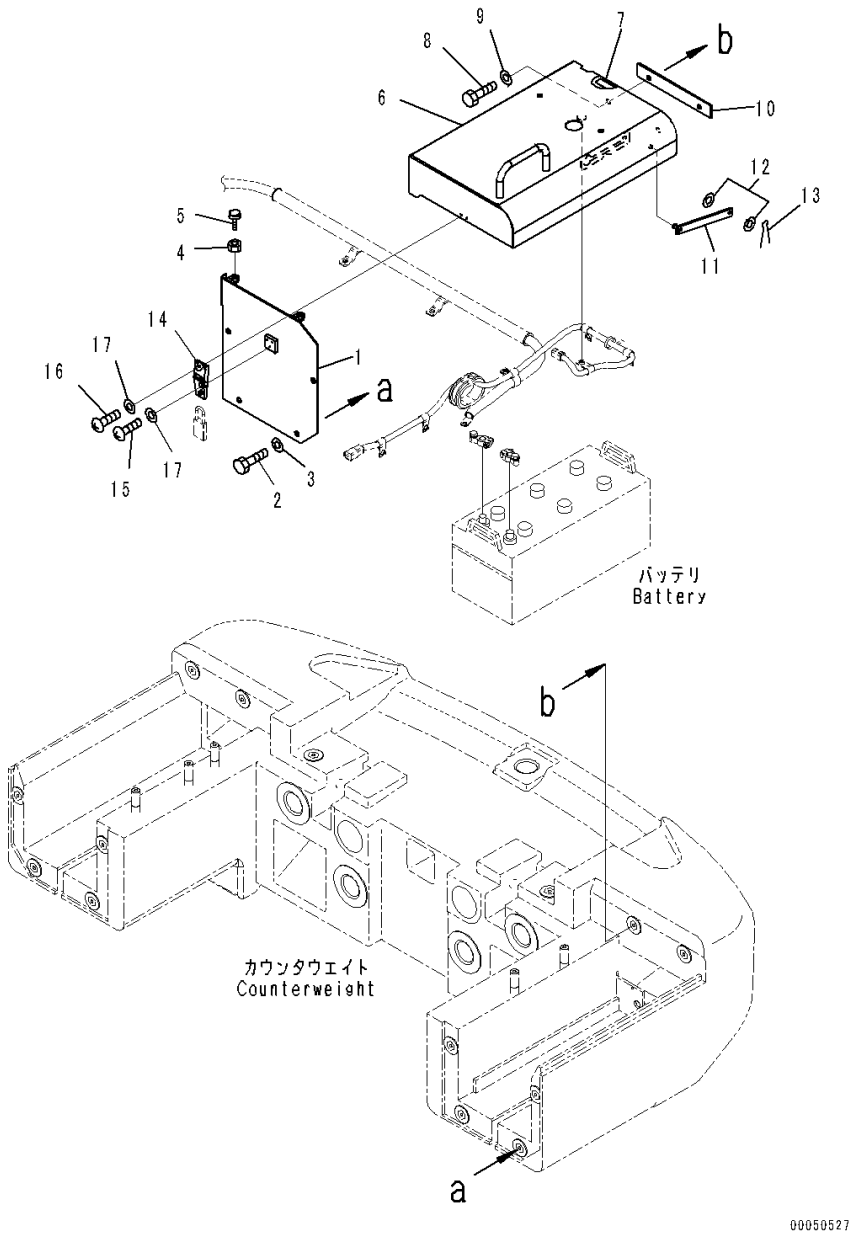

Index	Code	Part Number	Description	Qty	Serial Number
		Note: This list covers following specifications.			
		Without Oil Filler Cap Lock and Cover Lock			
		With Oil Filler Cap Lock and Cover Lock			
		With Oil Filler Cap Lock and Cover Lock, For North America			
		With Oil Filler Cap Lock and Cover Lock, Battery Disconnect Switch			
1		421-06-44230	Cover	1	90216-
2		01010-D1020	Bolt	4	90216-
3		01643-71032	Washer	4	90216-
4		01580-11008	Nut	2	90216-
5		20Y-54-11611	Stopper	2	90216-
6		421-06-44510	Cover	1	90216-
7		416-09-12230	• Hinge, Welded	1	90216-
8		01010-81025	Bolt	2	90216-
9		01643-31032	Washer	2	90216-
10		424-06-44250	Plate	1	90216-
11		421-06-24230	Bar	1	90216-
12		01641-20812	Washer	2	90216-
13		04050-12015	Pin, Cotter	1	90216-
14		421-09-12322	Holder	1	90821-
15		01220-40408	Screw	3	90216-
16		01220-40408	Screw	2	90216-
17		01641-20405	Washer	5	90216-

FIG. E0120-008002 Battery Box (Cover, R.H.)

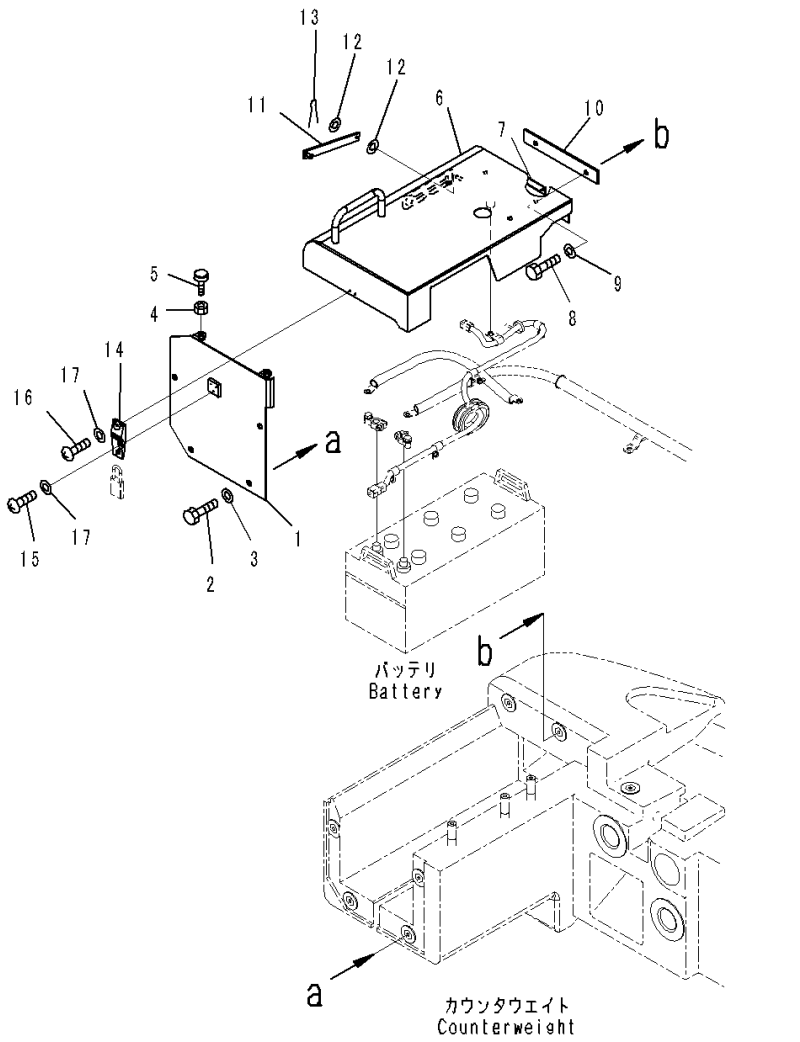

Index	Code	Part Number	Description	Qty	Serial Number
		Note: This list covers following specifications.			
		Without Oil Filler Cap Lock and Cover Lock			
		With Oil Filler Cap Lock and Cover Lock			
		With Oil Filler Cap Lock and Cover Lock, For North America			
1		421-06-44240	Cover	1	90216-
2		01010-D1020	Bolt	4	90216-
3		01643-71032	Washer	4	90216-
4		01580-11008	Nut	2	90216-
5		20Y-54-11611	Stopper	2	90216-
6		421-06-44520	Cover	1	90216-
7		416-09-12230	• Hinge, Welded	1	90216-
8		01010-81025	Bolt	2	90216-
9		01643-31032	Washer	2	90216-
10		424-06-44250	Plate	1	90216-
11		421-06-24230	Bar	1	90216-
12		01641-20812	Washer	2	90216-
13		04050-12015	Pin, Cotter	1	90216-
14		421-09-12322	Holder	1	90821-
15		01220-40408	Screw	3	90216-
16		01220-40408	Screw	2	90216-
17		01641-20405	Washer	5	90216-

FIG. E0120-008003 Battery Box (Holder)

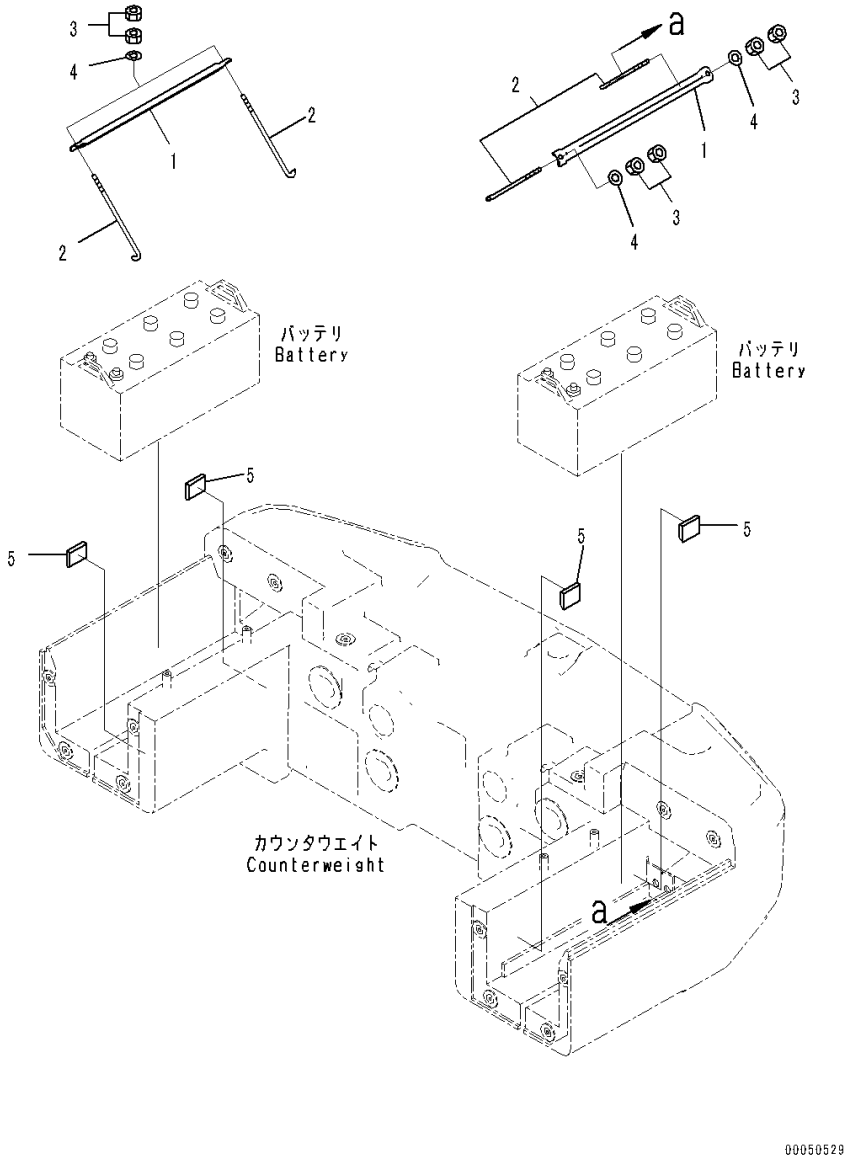

Index	Code	Part Number	Description	Qty	Serial Number
		Note: This list covers following specifications.			
		Without Oil Filler Cap Lock and Cover Lock			
		With Oil Filler Cap Lock and Cover Lock			
		With Oil Filler Cap Lock and Cover Lock, For North America			
		With Oil Filler Cap Lock and Cover Lock, Battery Disconnect Switch			
1		421-06-11221	Holder	2	90216-
2		113-06-31120	Bolt	4	90216-
3		01580-11008	Nut	8	90216-
4		01643-31032	Washer	4	90216-
5		423-06-44680	Cushion	8	90216-

FIG. E0120-008004 Battery Box (Rear Combination Lamp)

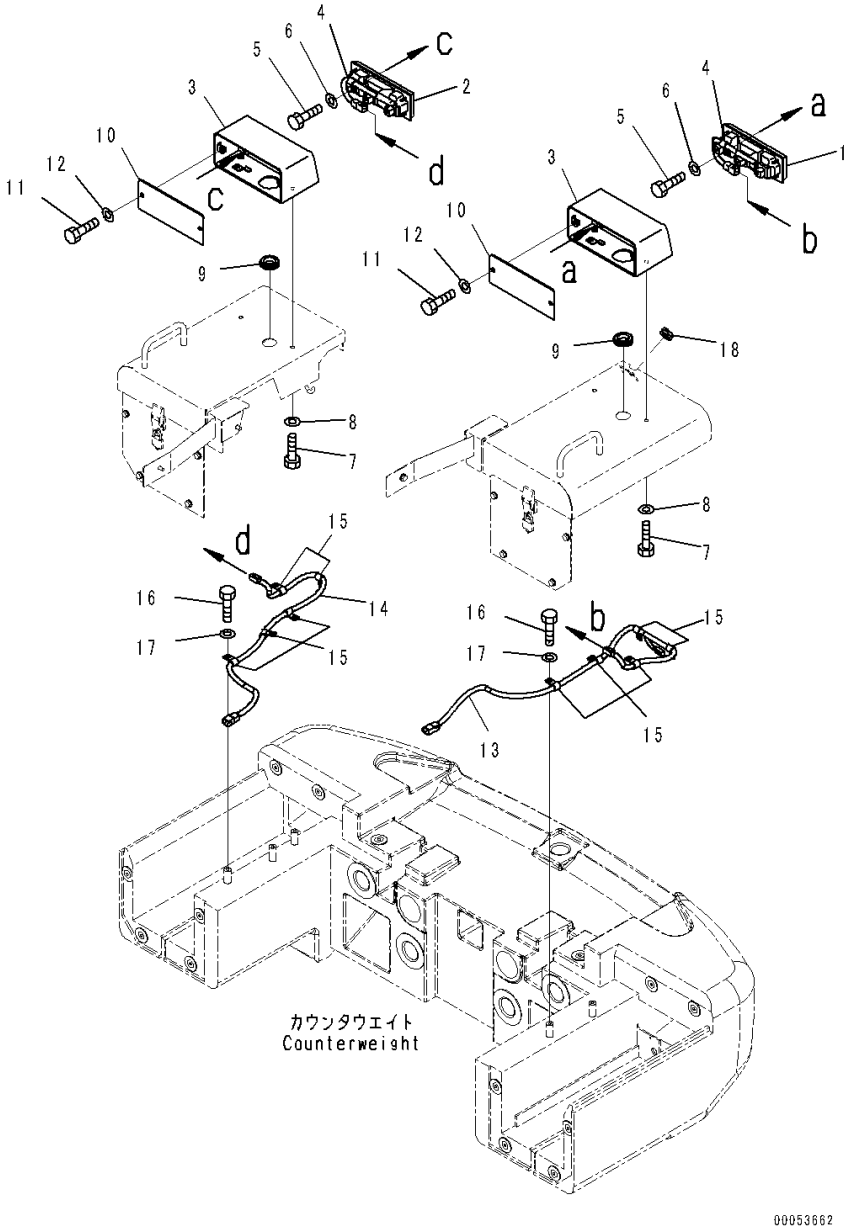

Index	Code	Part Number	Description	Qty	Serial Number
		Note: This list covers following specifications.			
		Without Oil Filler Cap Lock and Cover Lock			
		With Oil Filler Cap Lock and Cover Lock			
		With Oil Filler Cap Lock and Cover Lock, Battery Disconnect Switch			
1		424-06-43231	Lamp	1	90216-
		23A-06-21410	• Lens, Amber, Turn Signal	1	90216-
		424-06-43310	• Lens, Red, Tail And Stop	1	90216-
		23A-06-21430	• Lens, Clear, Back-up	1	90216-
		424-06-43330	• Bulb, 21watt	2	90216-
		424-06-43340	• Bulb, 21/5watt	1	90216-
		23A-06-21440	• Gasket	1	90216-
		01235-40530	• Screw, Philips Head	4	90216-
		01584-00504	• Nut, Flanged	4	90216-
2		424-06-43241	Lamp	1	90216-
		23A-06-21510	• Lens, Amber, Turn Signal	1	90216-
		424-06-43320	• Lens, Red, Tail And Stop	1	90216-
		23A-06-21530	• Lens, Clear, Back-up	1	90216-
		424-06-43330	• Bulb, 21watt	2	90216-
		424-06-43340	• Bulb, 21/5watt	1	90216-
		23A-06-21440	• Gasket	1	90216-
		01235-40530	• Screw, Philips Head	4	90216-
		01584-00504	• Nut, Flanged	4	90216-
3		423-06-44260	Bracket	2	90216-
4		04434-51412	Clip	2	90216-
5		01010-81020	Bolt	2	90216-
6		01643-31032	Washer	2	90216-
7		01010-D1020	Bolt	4	90216-
8		01643-71032	Washer	4	90216-
9		08037-03614	Grommet	2	90216-
10		419-06-23420	Plate	2	90216-
11		01010-D1020	Bolt	4	90216-
12		01643-71032	Washer	4	90216-
13		421-06-41261	Wiring Harness	1	90216-
14		421-06-41270	Wiring Harness	1	90216-
15		04434-51412	Clip	10	90216-
16		01010-81020	Bolt	6	90216-
17		01643-31032	Washer	6	90216-
18		09415-01008	Cap	1	90216-

FIG. E0120-008005 Battery Box (Battery Box Wiring Harness)

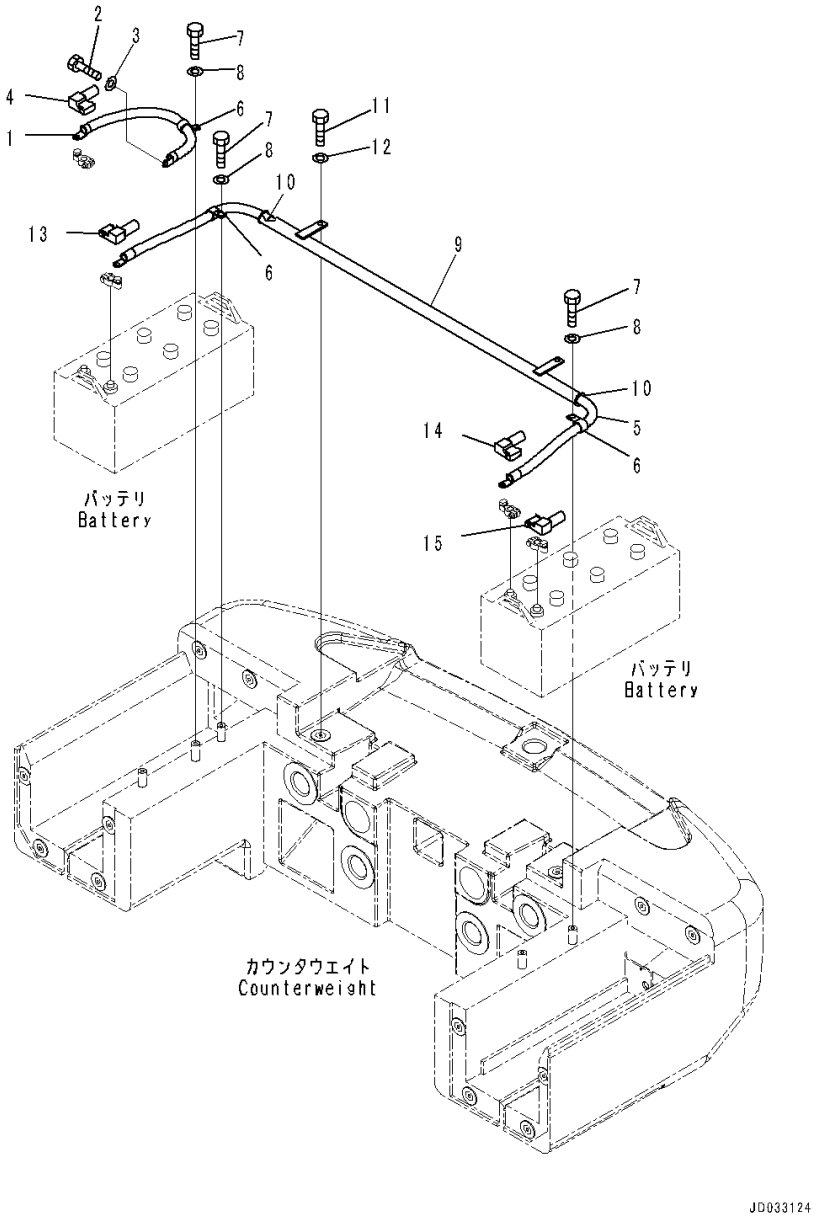

Index	Code	Part Number	Description	Qty	Serial Number
		Note: This list covers following specifications.			
		Without Oil Filler Cap Lock and Cover Lock			
		With Oil Filler Cap Lock and Cover Lock			
		With Oil Filler Cap Lock and Cover Lock, For North America			
1		08028-EE055	Cable, Ground	1	90216-
2		01010-81020	Bolt	1	90216-
3		01643-31032	Washer	1	90216-
4		14X-06-12270	Cover	1	90216-
5		421-06-42340	Cable	1	90216-
6		04434-52312	Clip	4	90216-
7		01010-81020	Bolt	4	90216-
8		01643-31032	Washer	4	90216-
9		421-06-44581	Pipe	1	90216-
10		418-06-31650	• Bushing	2	90216-
11		01010-81020	Bolt	2	90216-
12		01643-31032	Washer	2	90216-
13		14X-06-12280	Cover	1	90216-
14		14X-06-12290	Cover	1	90216-
15		14X-06-12280	Cover	1	90216-

FIG. E0120-008006 Battery Box (Cover)

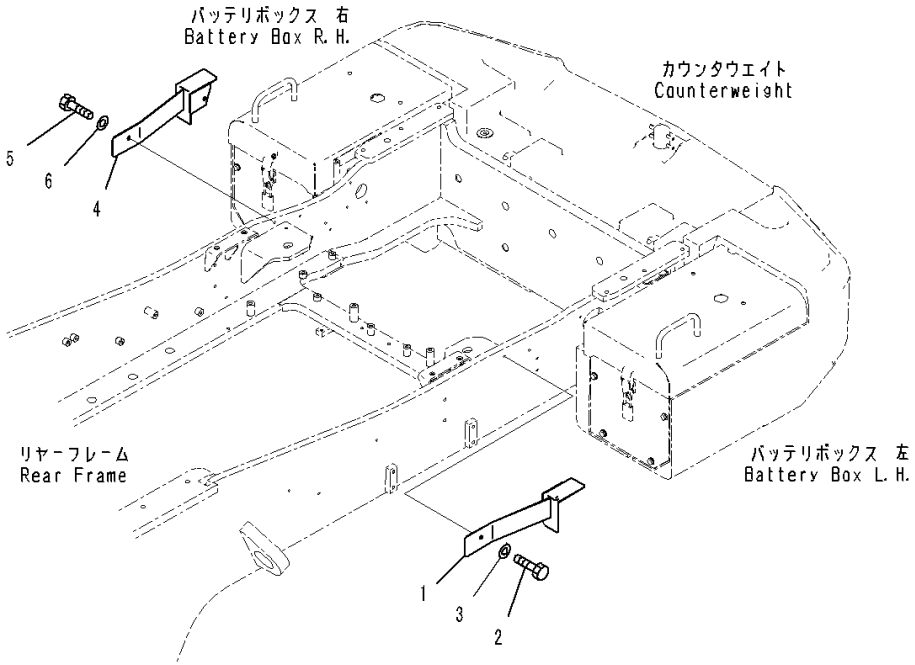

Index	Code	Part Number	Description	Qty	Serial Number
		Note: This list covers following specifications.			
		Without Oil Filler Cap Lock and Cover Lock			
		With Oil Filler Cap Lock and Cover Lock			
		With Oil Filler Cap Lock and Cover Lock, For North America			
		With Oil Filler Cap Lock and Cover Lock, Battery Disconnect Switch			
1		421-06-44250	Cover	1	90216-
2		01010-D1020	Bolt	2	90216-
3		01643-71032	Washer	2	90216-
4		421-06-44260	Cover	1	90216-
5		01010-D1020	Bolt	2	90216-
6		01643-71032	Washer	2	90216-

FIG. E0120-010005 Battery Box (Padlock)

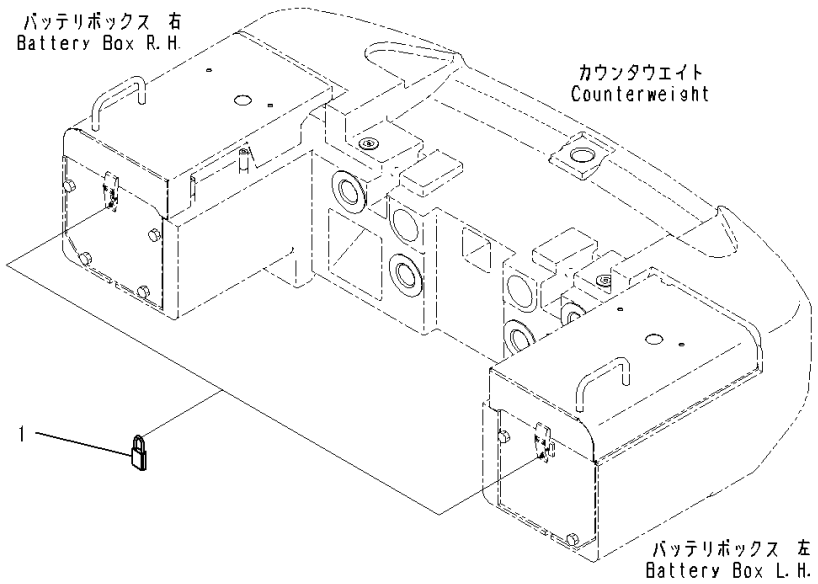

Index	Code	Part Number	Description	Qty	Serial Number
		Note: This list covers following specifications.			
		With Oil Filler Cap Lock and Cover Lock			
		With Oil Filler Cap Lock and Cover Lock, For North America			
		With Oil Filler Cap Lock and Cover Lock, Battery Disconnect Switch			
1		09460-00003	Padlock	1	90216-

FIG. E0120-009004 Battery Box (With Oil Filler Cap Lock and Cover Lock, For North America) (Rear Combination Lamp)

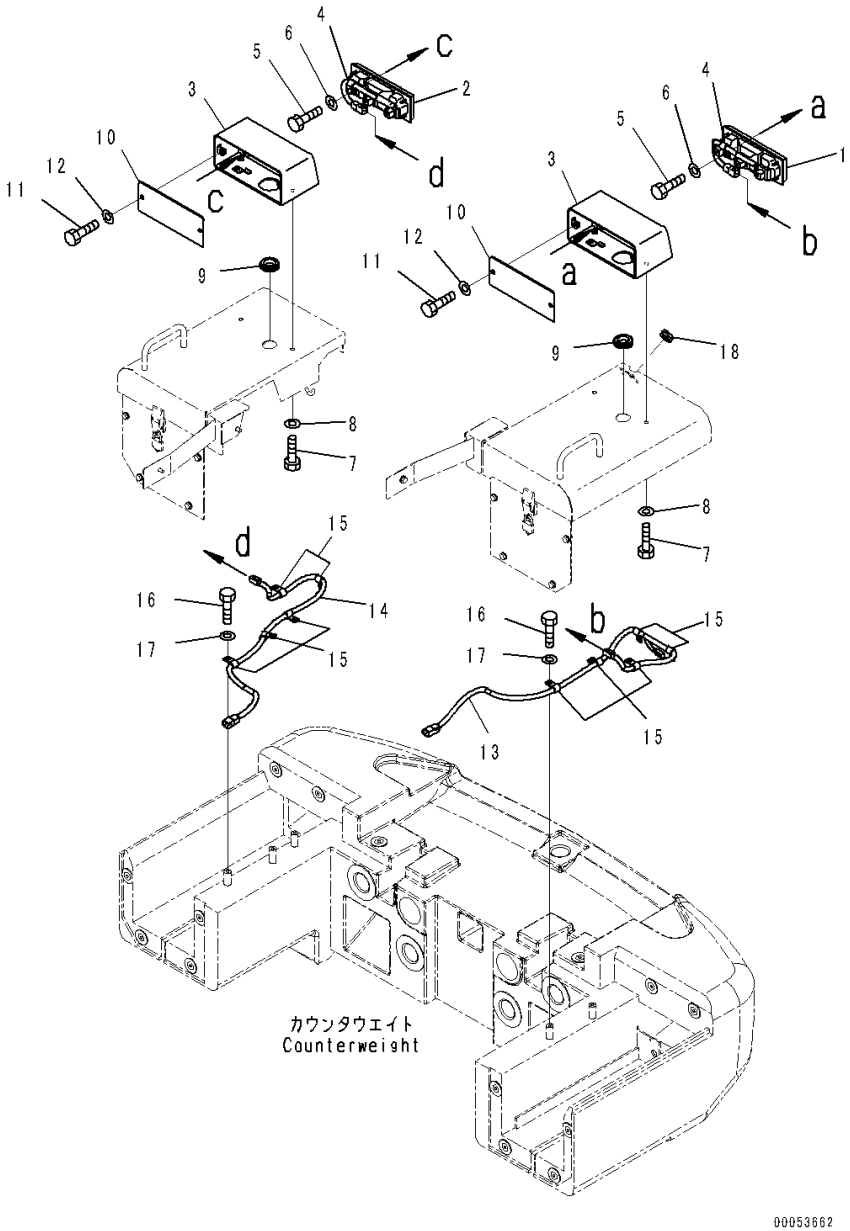

Index	Code	Part Number	Description	Qty	Serial Number
1		424-06-43231	Lamp	1	90216-
		23A-06-21410	• Lens, Amber, Turn Signal	1	90216-
		424-06-43310	• Lens, Red, Tail And Stop	1	90216-
		23A-06-21430	• Lens, Clear, Back-up	1	90216-
		424-06-43330	• Bulb, 21watt	2	90216-
		424-06-43340	• Bulb, 21/5watt	1	90216-
		23A-06-21440	• Gasket	1	90216-
		01235-40530	• Screw, Philips Head	4	90216-
		01584-00504	• Nut, Flanged	4	90216-
2		424-06-43241	Lamp	1	90216-
		23A-06-21510	• Lens, Amber, Turn Signal	1	90216-
		424-06-43320	• Lens, Red, Tail And Stop	1	90216-
		23A-06-21530	• Lens, Clear, Back-up	1	90216-
		424-06-43330	• Bulb, 21watt	2	90216-
		424-06-43340	• Bulb, 21/5watt	1	90216-
		23A-06-21440	• Gasket	1	90216-
		01235-40530	• Screw, Philips Head	4	90216-
		01584-00504	• Nut, Flanged	4	90216-
3		423-06-44270	Bracket	2	90216-
4		04434-51412	Clip	2	90216-
5		01010-81020	Bolt	2	90216-
6		01643-31032	Washer	2	90216-
7		01010-D1020	Bolt	4	90216-
8		01643-71032	Washer	4	90216-
9		08037-03614	Grommet	2	90216-
10		419-06-23420	Plate	2	90216-
11		01010-D1020	Bolt	4	90216-
12		01643-71032	Washer	4	90216-
13		421-06-41261	Wiring Harness	1	90216-
14		421-06-41270	Wiring Harness	1	90216-
15		04434-51412	Clip	10	90216-
16		01010-81020	Bolt	6	90216-
17		01643-31032	Washer	6	90216-
18		09415-01008	Cap	1	90216-

FIG. E0120-013002 Battery Box (With Oil Filler Cap Lock and Cover Lock, Battery Disconnect Switch) (Cover, R.H.)

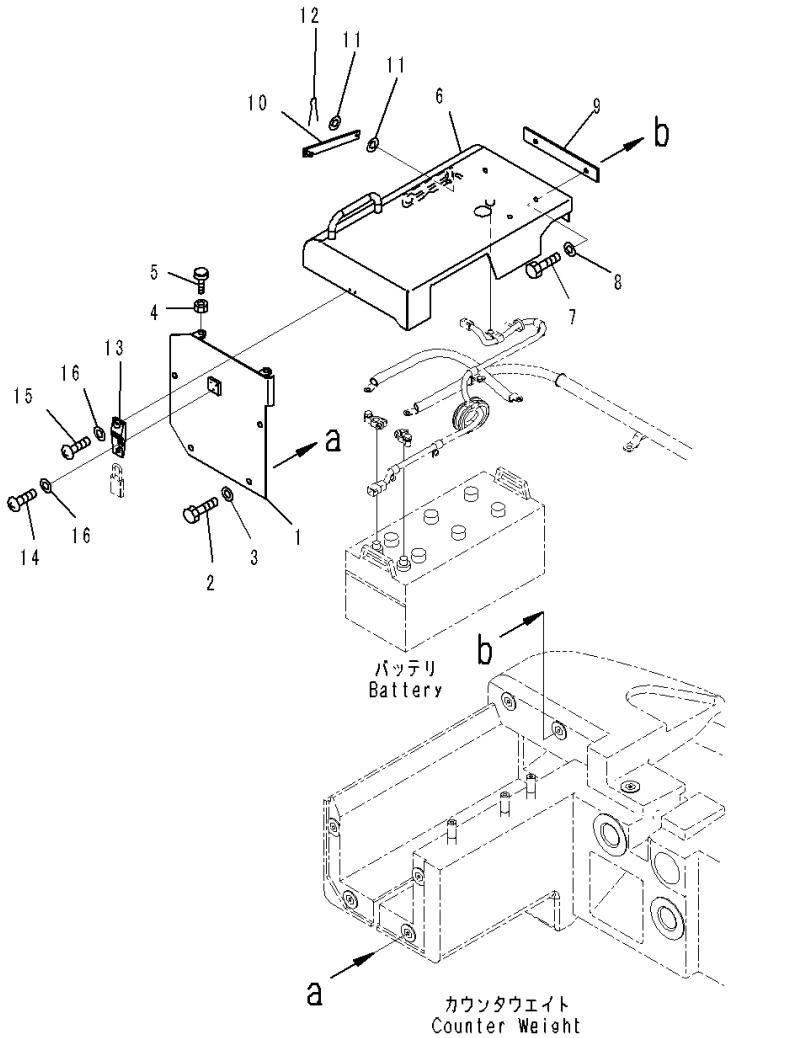

Index	Code	Part Number	Description	Qty	Serial Number
1		421-06-44240	Cover	1	90216-
2		01010-D1020	Bolt	4	90216-
3		01643-71032	Washer	4	90216-
4		01580-11008	Nut	2	90216-
5		20Y-54-11611	Stopper	2	90216-
6		421-06-44530	Cover	1	90216-
7		01010-81025	Bolt	2	90216-
8		01643-31032	Washer	2	90216-
9		424-06-44250	Plate	1	90216-
10		421-06-24230	Bar	1	90216-
11		01641-20812	Washer	2	90216-
12		04050-12015	Pin, Cotter	1	90216-
13		421-09-12322	Holder	1	90821-
14		01220-40408	Screw	3	90216-
15		01220-40408	Screw	2	90216-
16		01641-20405	Washer	5	90216-

FIG. E0120-013006 Battery Box (With Oil Filler Cap Lock and Cover Lock, Battery Disconnect Switch) (Battery Box Wiring Harness)

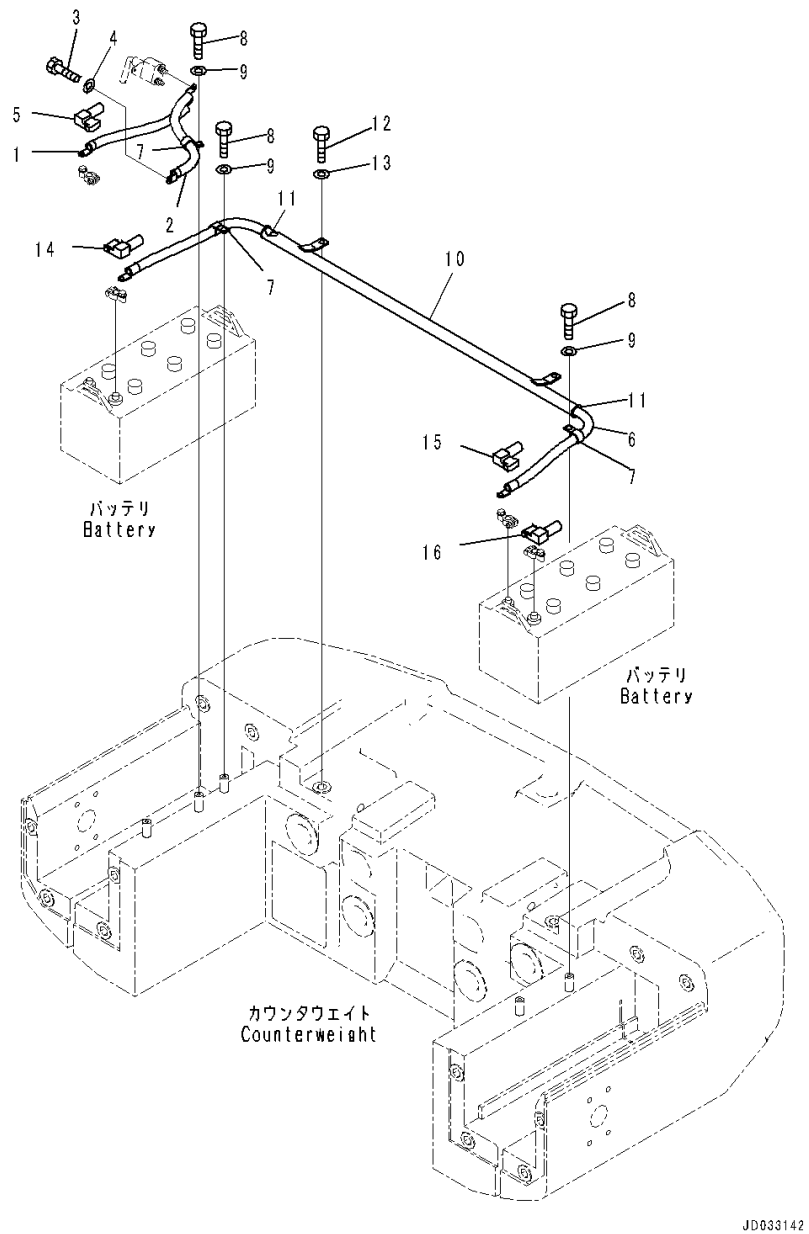

Index	Code	Part Number	Description	Qty	Serial Number
1		08028-EE045	Cable, Ground	1	90216-
2		08028-EE035	Cable, Ground	1	90216-
3		01010-81020	Bolt	1	90216-
4		01643-31032	Washer	1	90216-
5		14X-06-12270	Cover	1	90216-
6		421-06-42340	Cable	1	90216-
7		04434-52312	Clip	4	90216-
8		01010-81020	Bolt	4	90216-
9		01643-31032	Washer	4	90216-
10		421-06-44581	Pipe	1	90216-
11		418-06-31650	• Bushing	2	90216-
12		01010-81020	Bolt	2	90216-
13		01643-31032	Washer	2	90216-
14		14X-06-12280	Cover	1	90216-
15		14X-06-12290	Cover	1	90216-
16		14X-06-12280	Cover	1	90216-

FIG. E0120-013008 Battery Box (With Oil Filler Cap Lock and Cover Lock, Battery Disconnect Switch) (Disconnect Switch)

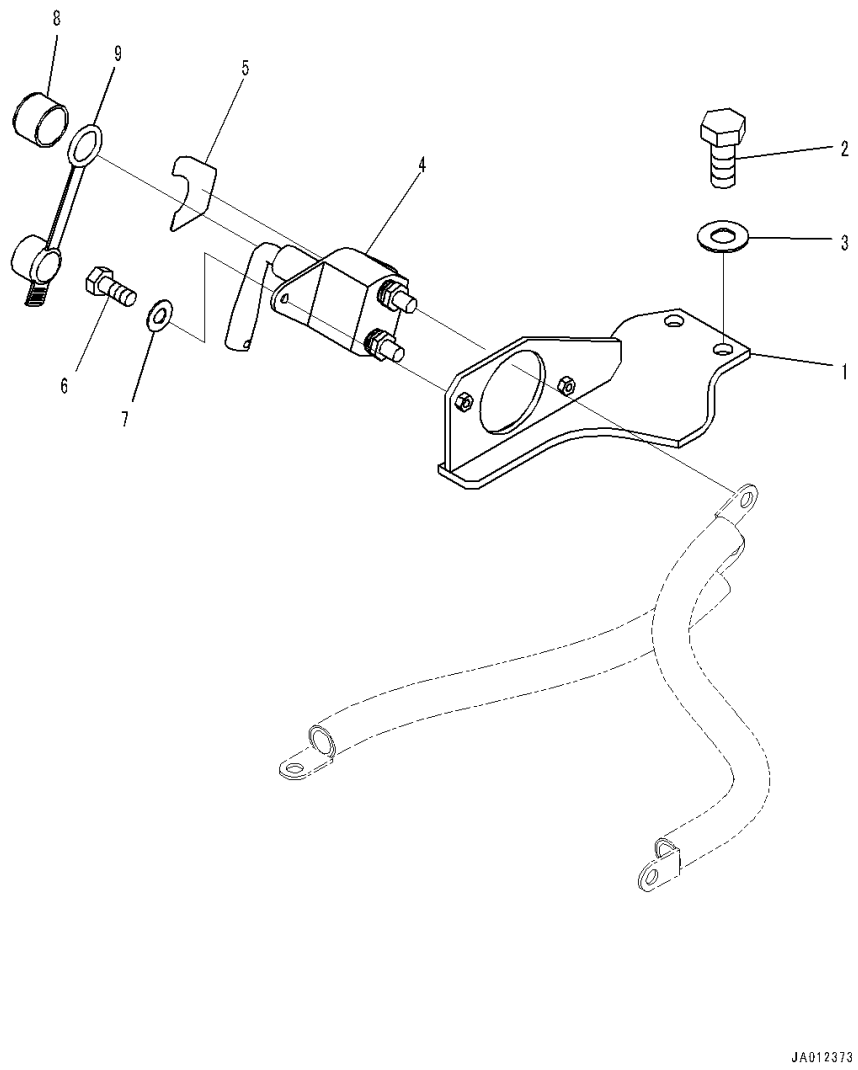

Index	Code	Part Number	Description	Qty	Serial Number
1		421-06-44330	Bracket	1	90216-
2		01010-81025	Bolt	2	90216-
3		01643-31032	Washer	2	90216-
4		561-86-69110	Switch, Battery	1	90216-
5		425-93-41310	Plate, Disconnection Switch	1	90216-
6		01010-80616	Bolt	2	90216-
7		01643-30623	Washer	2	90216-
8		418-06-42610	Cover	1	90796-
9		418-06-42620	Cap	1	90796-

FIG. E0200-001001 Front Wiring Harness (Wiring Harness) (1/2)

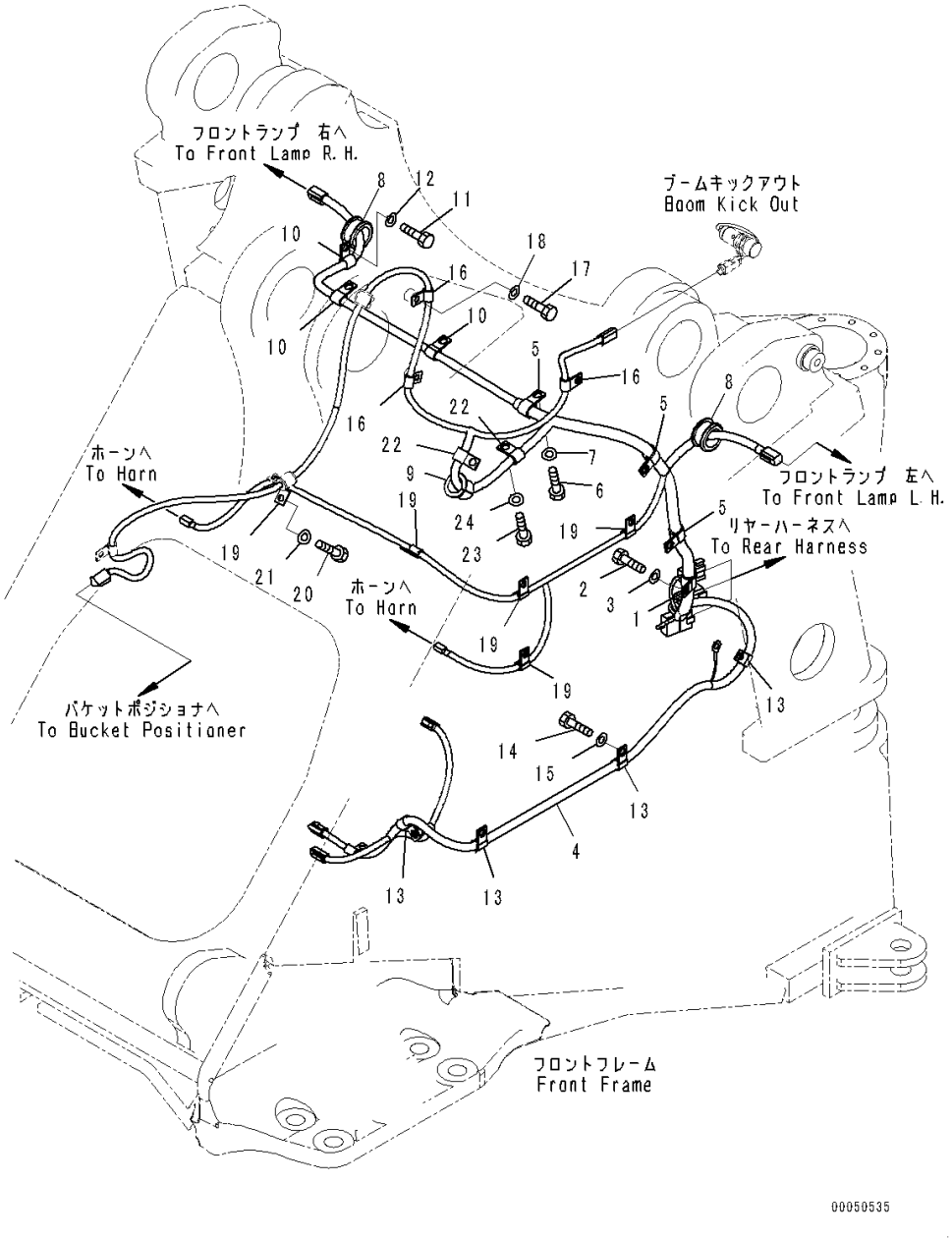

Index	Code	Part Number	Description	Qty	Serial Number
		Note: This list covers following specifications.			
		Without Load Meter			
		With Brake Oil Cooling System, Without Load Meter			
1		04434-51912	Clip	1	90216-
2		01010-81020	Bolt	1	90216-
3		01643-31032	Washer	1	90216-
4		421-06-41240	Wiring Harness	1	90216-
5		04434-51912	Clip	3	90216-
6		01010-81020	Bolt	3	90216-
7		01643-31032	Washer	3	90216-
8		416-06-11310	Grommet	2	90216-
9		426-09-11210	Grommet	1	90216-
10		04434-51412	Clip	3	90216-
11		01010-81020	Bolt	3	90216-
12		01643-31032	Washer	3	90216-
13		04434-51412	Clip	4	90216-
14		01010-81020	Bolt	4	90216-
15		01643-31032	Washer	4	90216-
16		04434-51012	Clip	3	90216-
17		01010-81020	Bolt	3	90216-
18		01643-31032	Washer	3	90216-
19		04434-51012	Clip	5	90216-
20		01010-81020	Bolt	5	90216-
21		01643-31032	Washer	5	90216-
22		04434-51412	Clip	2	90216-
23		01010-81020	Bolt	4	90216-
24		01643-31032	Washer	4	90216-

FIG. E0200-001002 Front Wiring Harness (Without Load Meter) (Wiring Harness) (2/2)

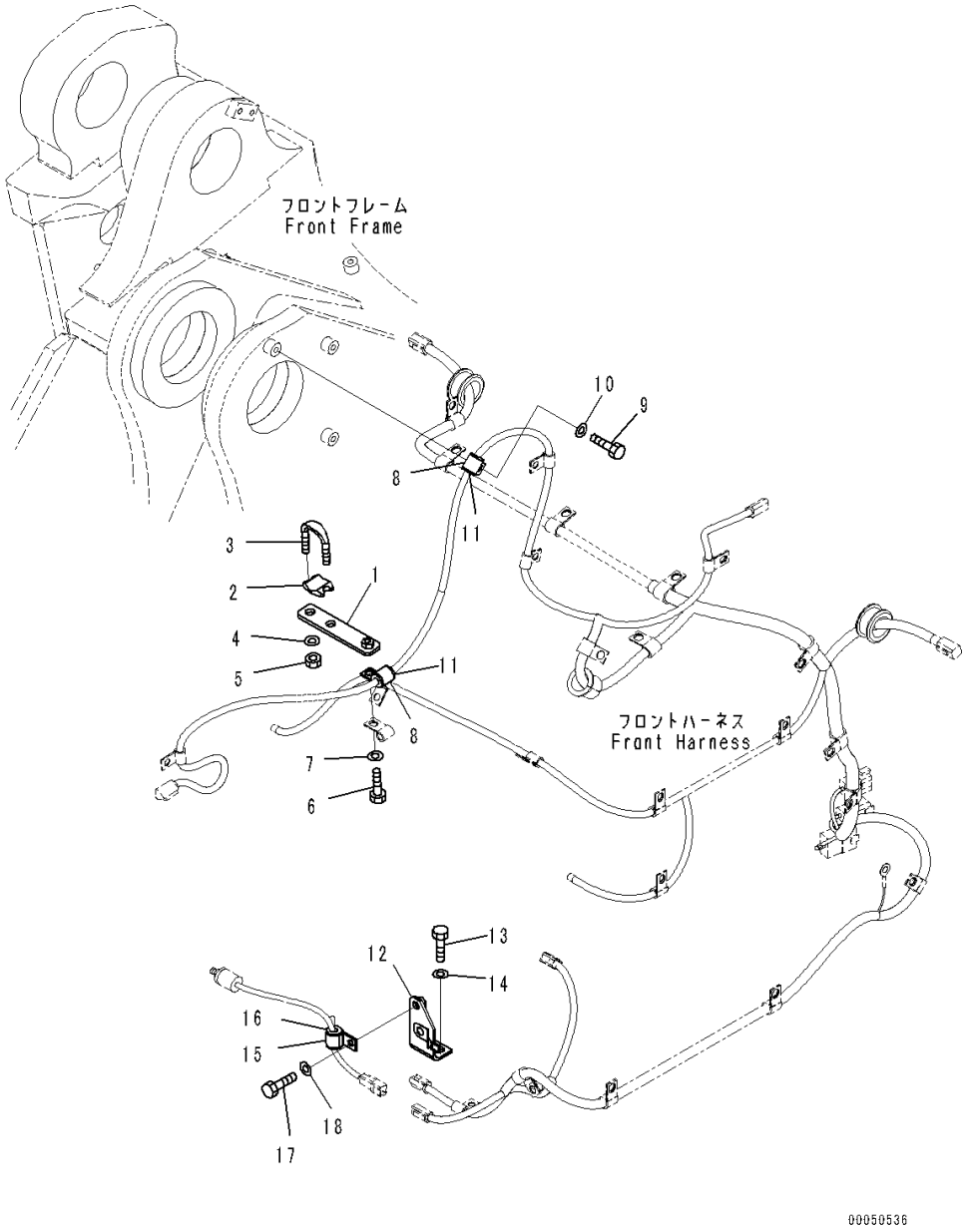

Index	Code	Part Number	Description	Qty	Serial Number
1		421-06-42270	Bracket	1	90216-
2		07283-53444	Seat	1	90216-
3		07283-33442	Clip, Pipe	1	90216-
4		01643-31032	Washer	2	90216-
5		01597-01009	Nut	2	90216-
6		01010-81025	Bolt	1	90216-
7		01643-31032	Washer	1	90216-
8		04434-51712	Clip	2	90216-
9		01010-81020	Bolt	1	90216-
10		01643-31032	Washer	1	90216-
11		07095-20211	Cushion	2	90216-
12		421-06-42440	Bracket	1	90216-
13		01010-81025	Bolt	2	90216-
14		01643-31032	Washer	2	90216-
15		04434-51710	Clip	1	90216-
16		07095-20211	Cushion	1	90216-
17		01010-81020	Bolt	1	90216-
18		01643-31032	Washer	1	90216-

FIG. E0200-003002 Front Wiring Harness (With Brake Oil Cooling System, Without Load Meter) (Wiring Harness) (2/2)

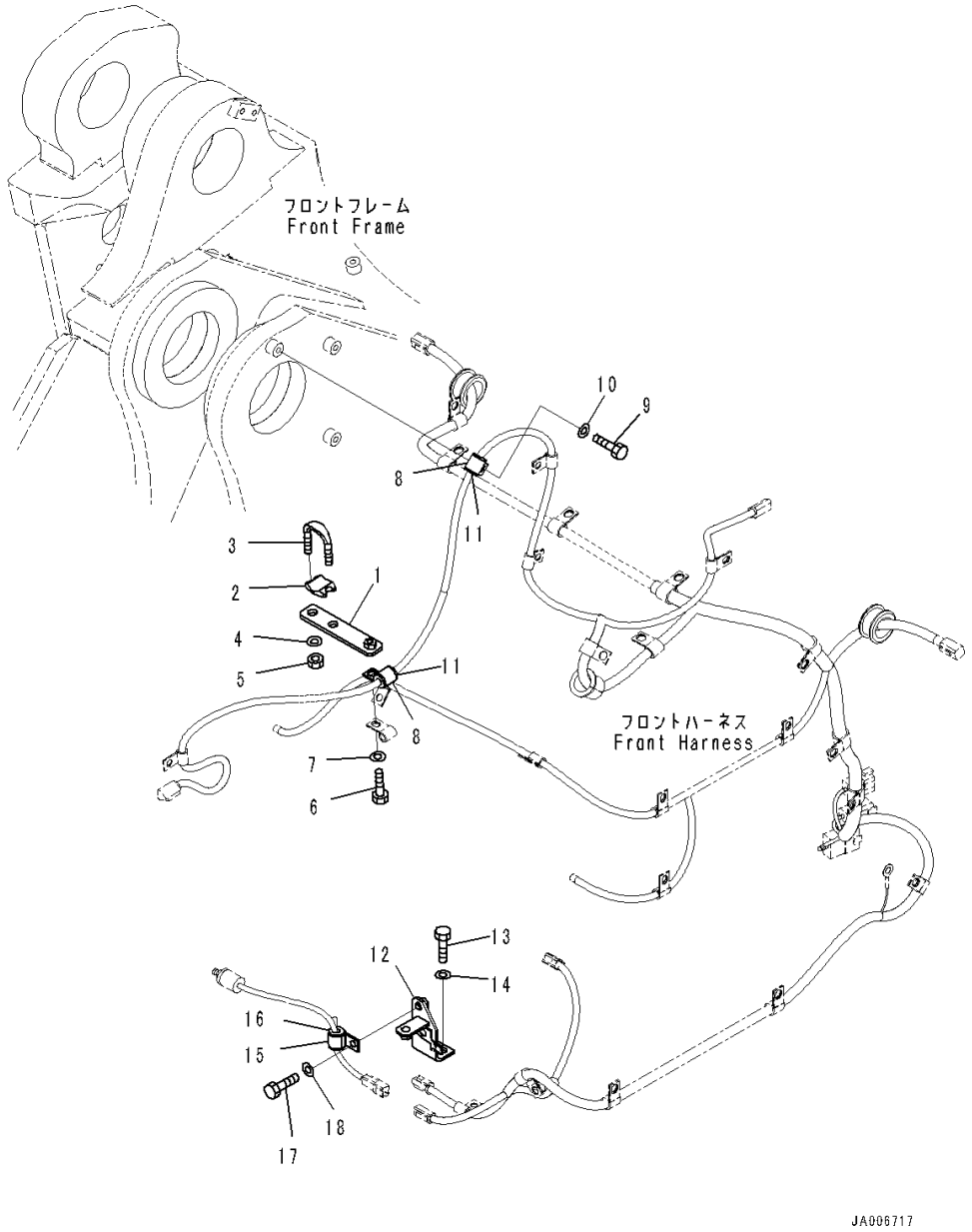

Index	Code	Part Number	Description	Qty	Serial Number
1		421-06-42270	Bracket	1	90216-
2		07283-53444	Seat	1	90216-
3		07283-33442	Clip, Pipe	1	90216-
4		01643-31032	Washer	2	90216-
5		01597-01009	Nut	2	90216-
6		01010-81025	Bolt	1	90216-
7		01643-31032	Washer	1	90216-
8		04434-51712	Clip	2	90216-
9		01010-81020	Bolt	1	90216-
10		01643-31032	Washer	1	90216-
11		07095-20211	Cushion	2	90216-
12		421-U44-4950	Bracket	1	90216-
13		01010-81025	Bolt	2	90216-
14		01643-31032	Washer	2	90216-
15		04434-51710	Clip	1	90216-
16		07095-20211	Cushion	1	90216-
17		01010-81020	Bolt	1	90216-
18		01643-31032	Washer	1	90216-

FIG. E0202-004001 Rear Wiring Harness (Mounting) (1/2)

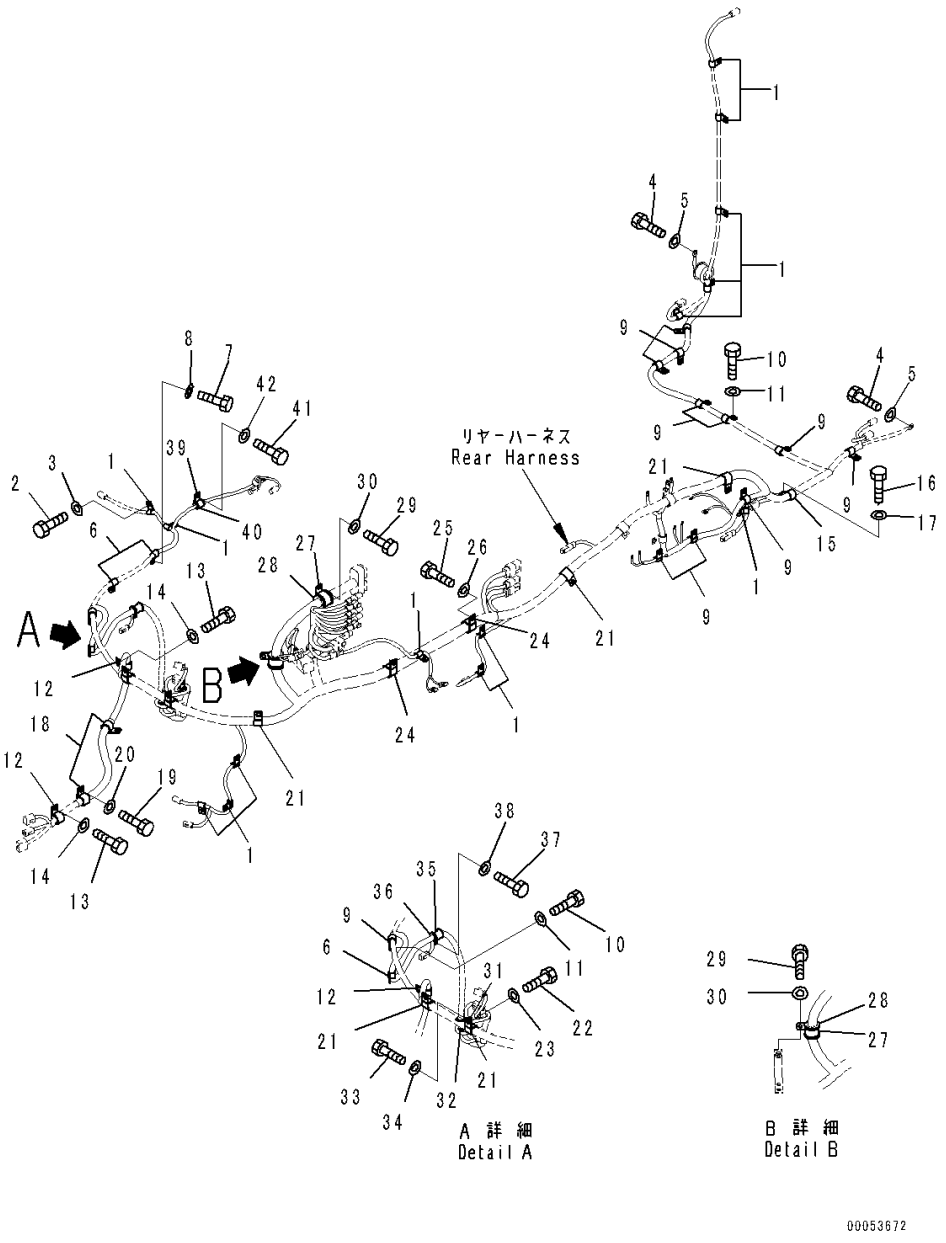

Index	Code	Part Number	Description	Qty	Serial Number
		Note: This list covers following specifications.			
		Without Emergency Steering, Automatic Control Type			
		With Emergency Steering, Automatic Control Type			
1		04434-51012	Clip	13	90216-
2		01010-81020	Bolt	11	90216-
3		01643-31032	Washer	11	90216-
4		01010-81016	Bolt	2	90216-
5		01643-31032	Washer	2	90216-
6		04434-51412	Clip	3	90216-
7		01010-81020	Bolt	3	90216-
8		01643-31032	Washer	3	90216-
9		04434-51712	Clip	10	90216-
10		01010-81020	Bolt	7	90216-
11		01643-31032	Washer	7	90216-
12		04434-51912	Clip	2	90216-
13		01010-81020	Bolt	2	90216-
14		01643-31032	Washer	2	90216-
15		04434-52312	Clip	1	90216-
16		01010-81020	Bolt	1	90216-
17		01643-31032	Washer	1	90216-
18		04434-52512	Clip	2	90216-
19		01010-81020	Bolt	2	90216-
20		01643-31032	Washer	2	90216-
21		04434-52712	Clip	5	90216-
22		01010-81020	Bolt	5	90216-
23		01643-31032	Washer	5	90216-
24		04434-53412	Clip	2	90216-
25		01010-81020	Bolt	2	90216-
26		01643-31032	Washer	2	90216-
27		155-61-15350	Clip	2	90216-
28		07095-00630	Cushion	2	90216-
29		01010-81025	Bolt	2	90216-
30		01643-31032	Washer	2	90216-
31		04434-52112	Clip	1	90216-
32		07095-20318	Cushion	1	90216-
33		01010-81020	Bolt	1	90216-
34		01643-31032	Washer	1	90216-
35		04434-52112	Clip	1	90216-
36		07095-20318	Cushion	1	90216-
37		01010-81020	Bolt	1	90216-

FIG. E0202-004001 Rear Wiring Harness (Mounting) (1/2)

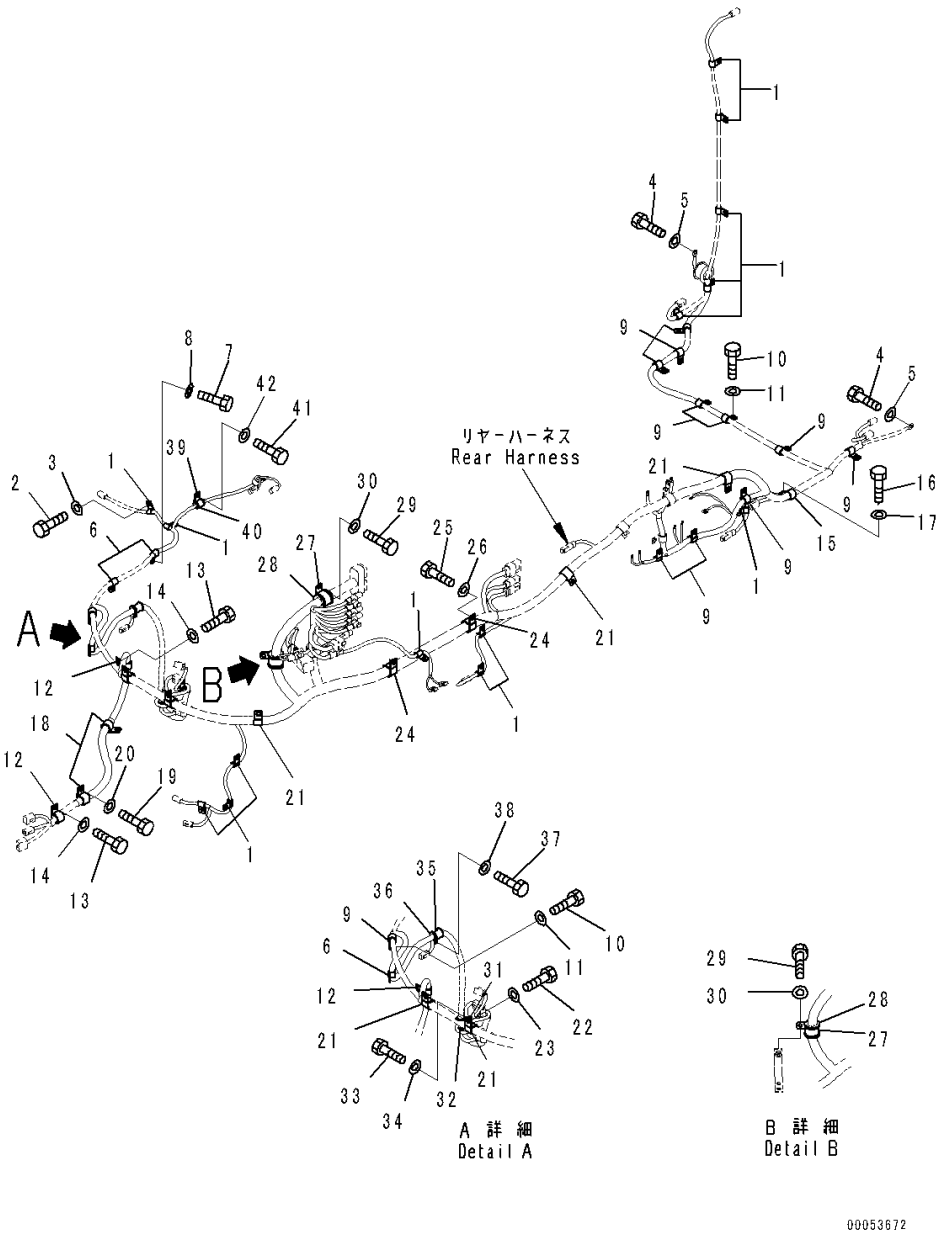

Index	Code	Part Number	Description	Qty	Serial Number
38		01643-31032	Washer	1	90216-
39		04434-51612	Clip	1	90216-
40		07095-20211	Cushion	1	90216-
41		01010-81020	Bolt	1	90216-
42		01643-31032	Washer	1	90216-

FIG. E0202-004002 Rear Wiring Harness (Mounting) (2/2)

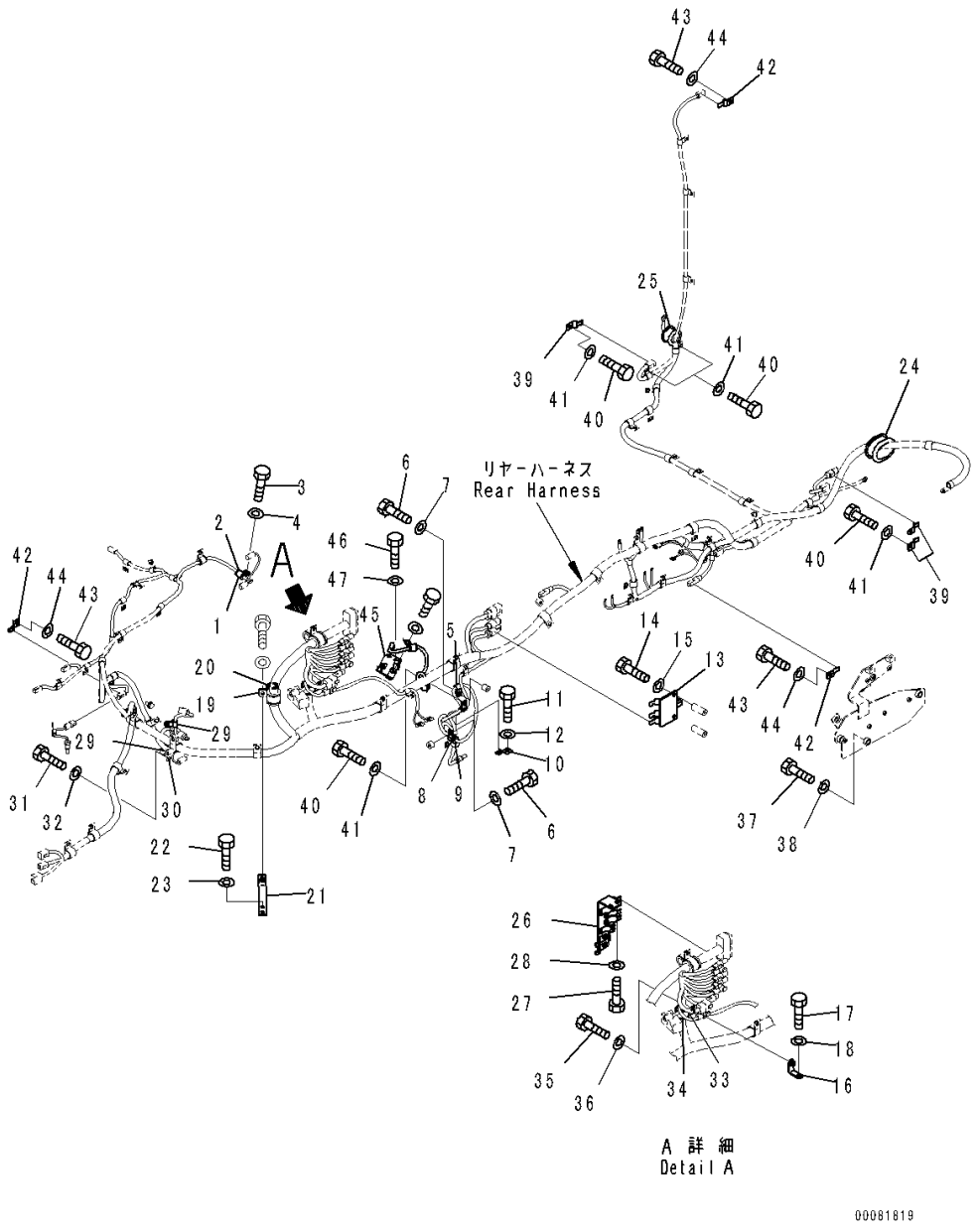

Index	Code	Part Number	Description	Qty	Serial Number
		Note: This list covers following specifications.			
		Without Emergency Steering, Automatic Control Type			
		With Emergency Steering, Automatic Control Type			
1		04434-51612	Clip	1	90216-
2		07095-20211	Cushion	1	90216-
3		01010-81020	Bolt	1	90216-
4		01643-31032	Washer	1	90216-
5		04434-51012	Clip	1	90216-
6		01010-81020	Bolt	2	90216-
7		01643-31032	Washer	2	90216-
8		04434-51712	Clip	1	90216-
9		07095-20211	Cushion	1	90216-
10		08193-21012	Clip	1	90216-
11		01010-81020	Bolt	1	90216-
12		01643-31032	Washer	1	90216-
13		421-06-41890	Bracket	1	90216-
14		01010-81020	Bolt	2	90216-
15		01643-31032	Washer	2	90216-
16		421-06-42310	Plate	1	90216-
17		01010-81020	Bolt	1	90216-
18		01643-31032	Washer	1	90216-
19		04434-53212	Clip	1	90216-
20		07095-20523	Cushion	1	90216-
21		421-06-41920	Bracket	1	90216-
22		01010-81025	Bolt	2	90216-
23		01643-31032	Washer	2	90216-
24		424-06-14170	Grommet	1	90216-
25		201-06-61370	Grommet	1	90216-
26		423-06-42510	Bracket	1	90216-
27		01010-81020	Bolt	2	90216-
28		01643-31032	Washer	2	90216-
29		600-051-2100	Clip	2	90216-
30		600-051-2160	Clip	1	90216-
31		01010-81020	Bolt	2	90216-
32		01643-31032	Washer	2	90216-
33		04434-53412	Clip	1	90216-
34		07095-20627	Cushion	1	90216-
35		01010-81020	Bolt	1	90216-
36		01643-31032	Washer	1	90216-
37		01010-D1045	Bolt	3	90216-

FIG. E0202-004002 Rear Wiring Harness (Mounting) (2/2)

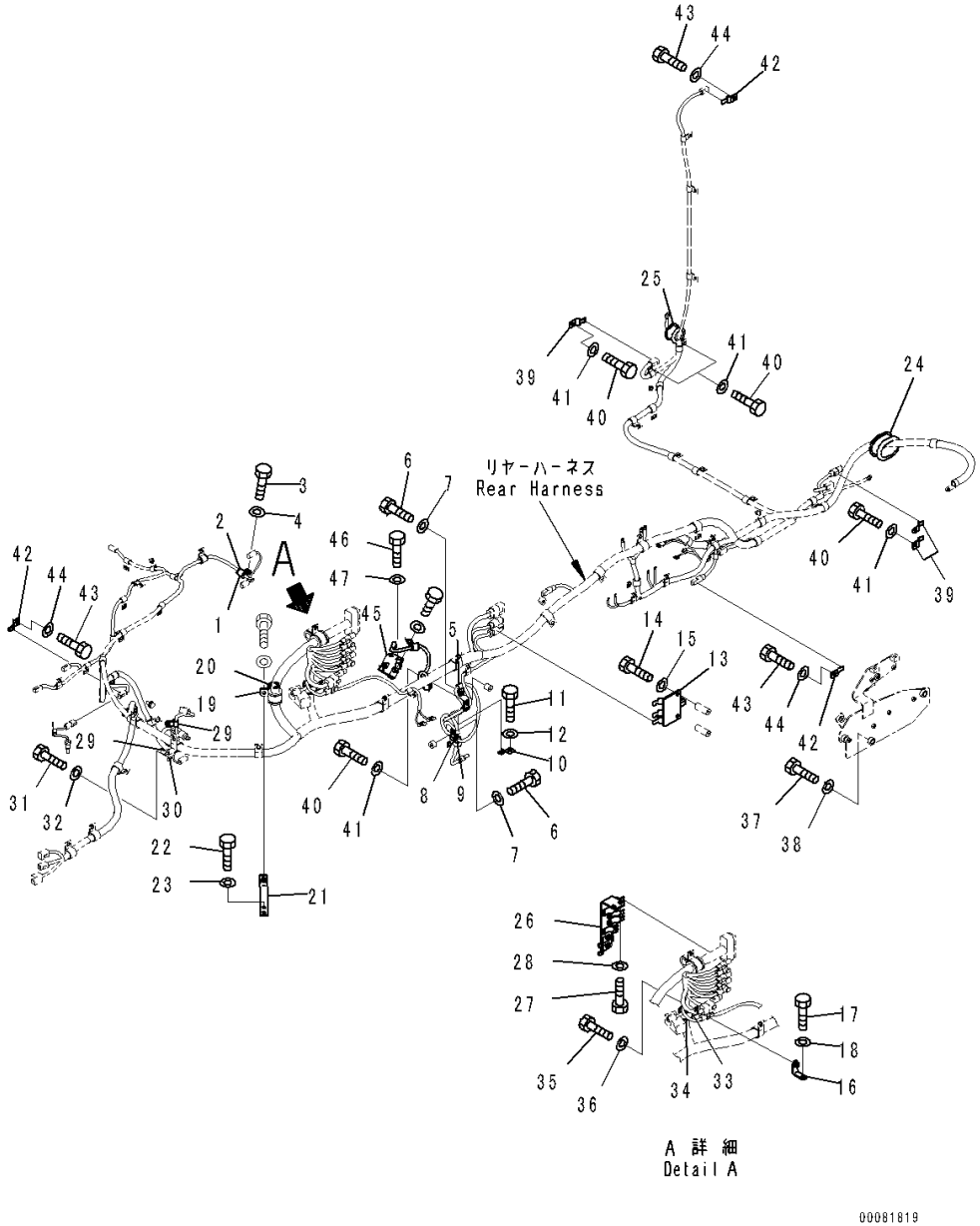

Index	Code	Part Number	Description	Qty	Serial Number
38		01643-71032	Washer	3	90216-
39		08193-21012	Clip	3	90216-
40		01010-D1030	Bolt	6	90216-
41		01643-71032	Washer	6	90216-
42		08193-21012	Clip	4	90216-
43		01010-81020	Bolt	4	90216-
44		01643-31032	Washer	4	90216-
45		421-06-41910	Bracket	1	90216-
46		01010-81035	Bolt	2	90216-
47		01643-31032	Washer	2	90216-

FIG. E0202-004003 Rear Wiring Harness (Battery Cable)

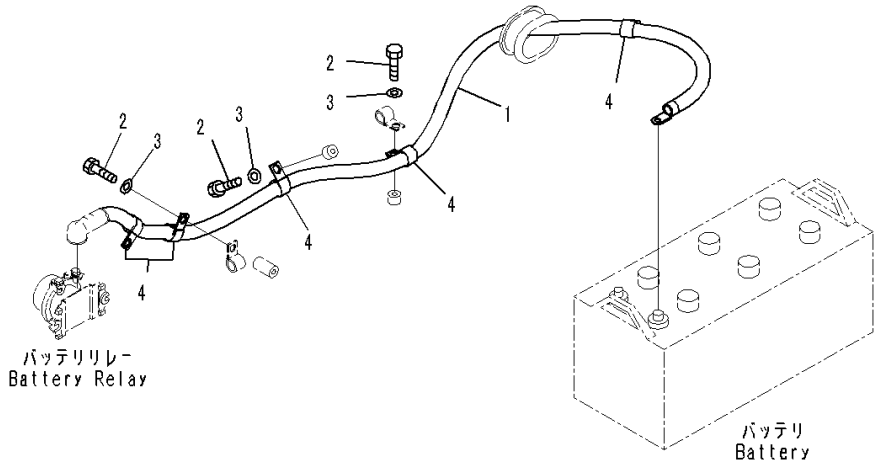

Index	Code	Part Number	Description	Qty	Serial Number
		Note: This list covers following specifications.			
		Without Emergency Steering, Automatic Control Type			
		With Emergency Steering, Automatic Control Type			
1		421-06-41710	Cable	1	90216-
2		01010-81020	Bolt	5	90216-
3		01643-31032	Washer	5	90216-
4		04434-52312	Clip	5	90216-

FIG. E0202-004004 Rear Wiring Harness (Without Emergency Steering, Automatic Control Type) (Wiring Harness and Relay)

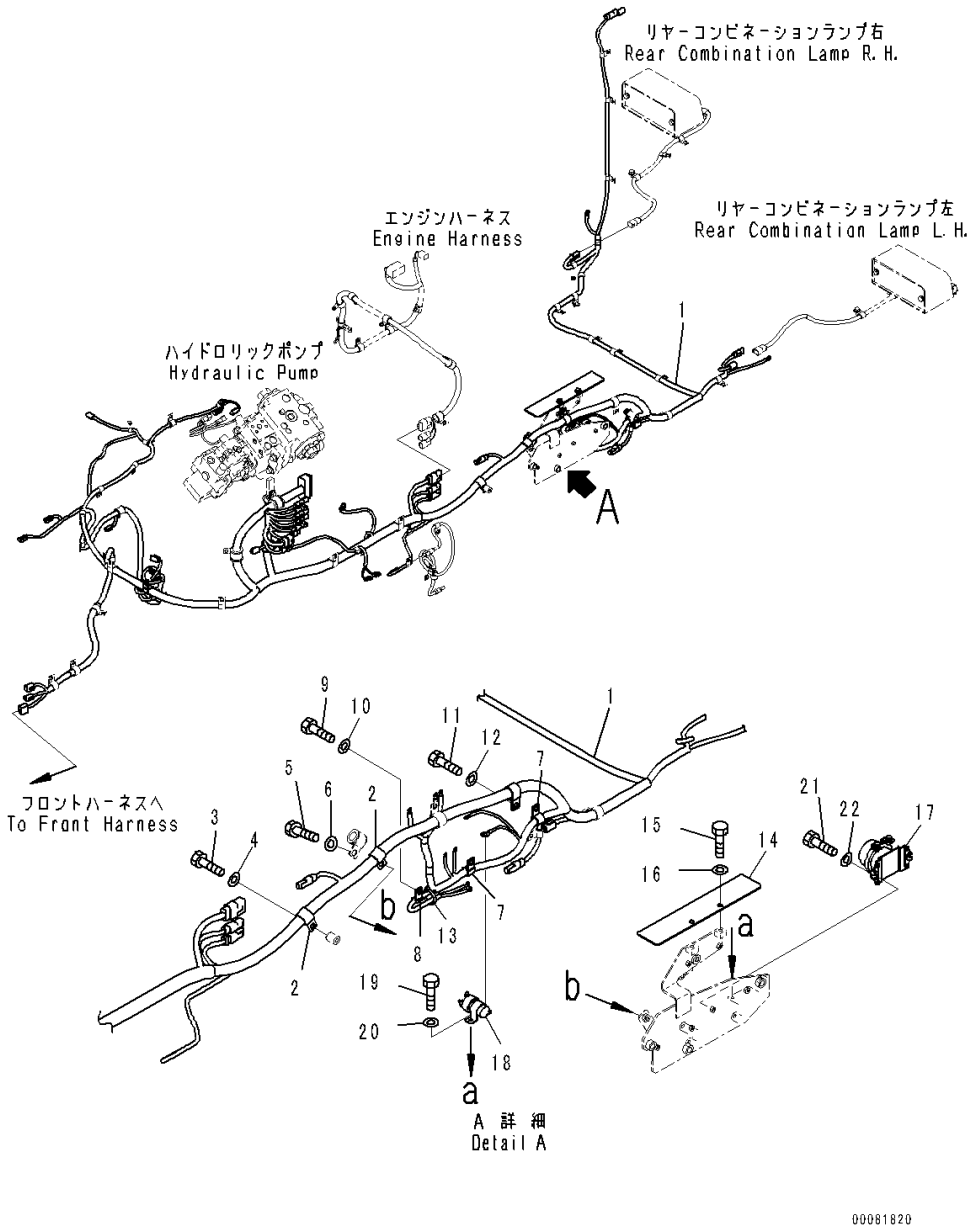

Index	Code	Part Number	Description	Qty	Serial Number
1		421-06-42381	Wiring Harness	1	90569-
		21J-06-13661	• Diode	1	90216-
2		04434-52712	Clip	2	90216-
3		01010-81020	Bolt	1	90216-
4		01643-31032	Washer	1	90216-
5		01010-81025	Bolt	1	90216-
6		01643-31032	Washer	1	90216-
7		04434-51712	Clip	2	90216-
8		04434-51012	Clip	1	90216-
9		01010-81020	Bolt	2	90216-
10		01643-31032	Washer	2	90216-
11		01010-81025	Bolt	1	90216-
12		01643-31032	Washer	1	90216-
13		08034-20519	Band	1	90216-
14		421-06-42910	Plate	1	90216-
15		01010-81020	Bolt	2	90216-
16		01643-31032	Washer	2	90216-
17		08088-30000	Switch, Battery Relay	1	90216-
18		600-815-2170	Switch, Heater	1	90216-
19		01010-80616	Bolt	2	90216-
20		01643-30623	Washer	2	90216-
21		01010-80830	Bolt	2	90216-
22		01643-30823	Washer	2	90216-

FIG. E0202-004005 Rear Wiring Harness (Fuse)

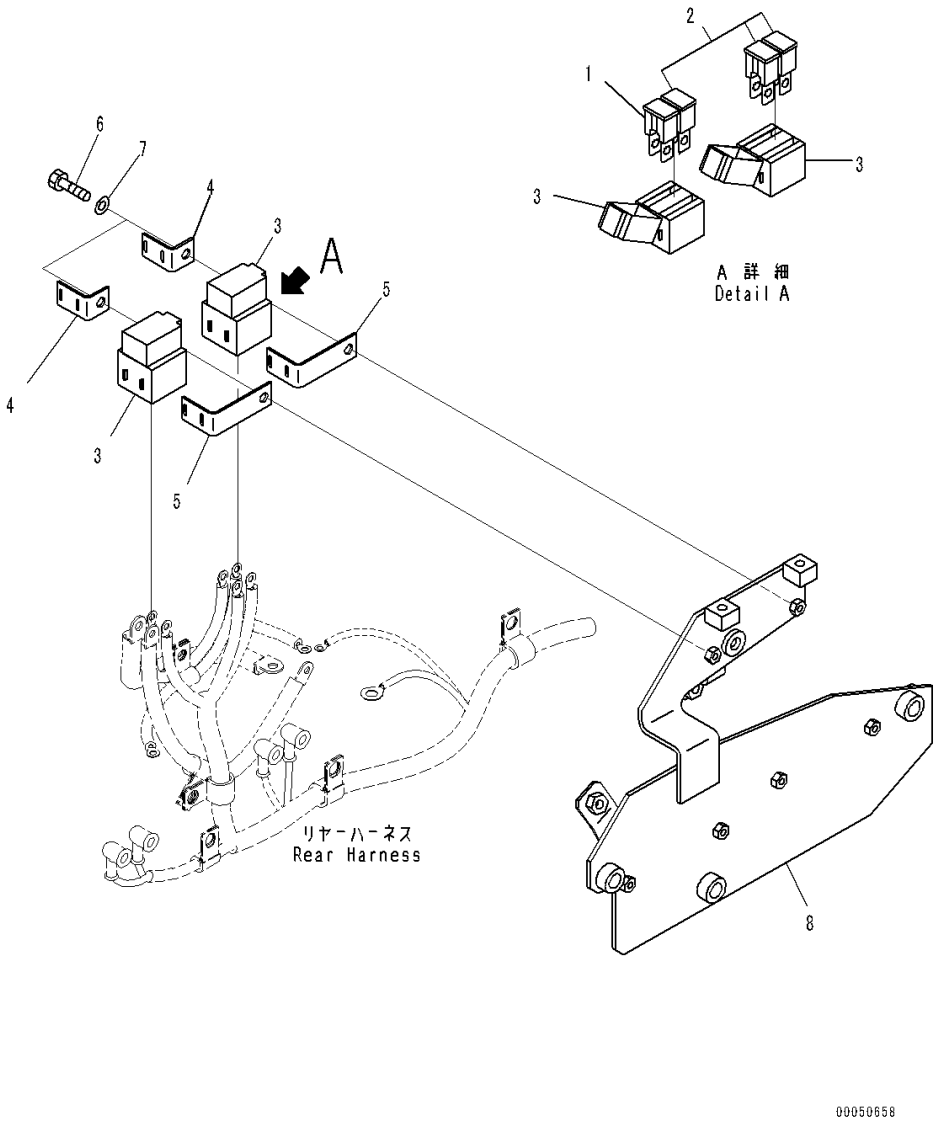

Index	Code	Part Number	Description	Qty	Serial Number
		Note: This list covers following specifications.			
		Without Emergency Steering, Automatic Control Type			
		With Emergency Steering, Automatic Control Type			
1		421-06-22830	Fuse, 120Amp.	1	90216-
2		417-06-22610	Fuse, 50Amp.	3	90216-
3		421-06-22880	Holder	2	90216-
4		424-06-43160	Bracket	2	90216-
5		424-06-43170	Bracket	2	90216-
6		01010-80820	Bolt	2	90216-
7		01643-30823	Washer	2	90216-
8		421-06-42850	Bracket	1	90216-

FIG. E0202-004006 Rear Wiring Harness (Without Emergency Steering, Automatic Control Type) (Wiring Harness)

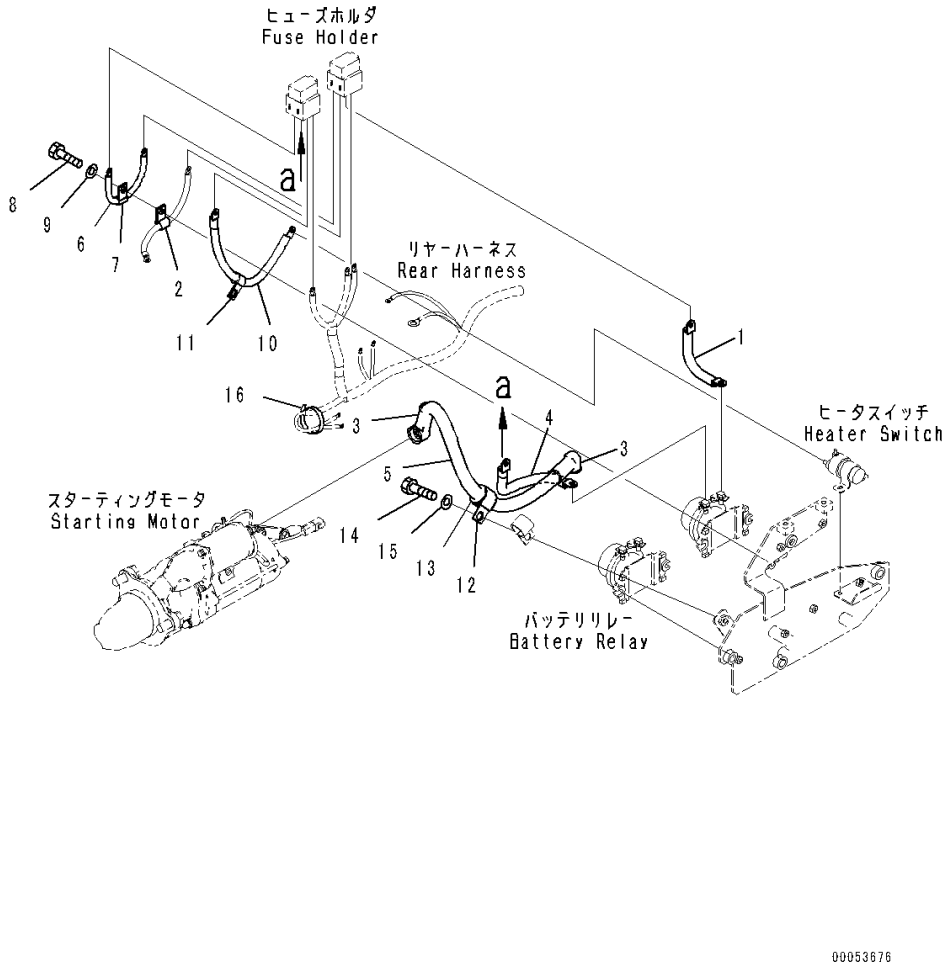

Index	Code	Part Number	Description	Qty	Serial Number
1		423-06-42330	Cable	1	90216-
2		04434-51012	Clip	1	90216-
3		08038-00035	Cap, Terminal	2	90216-
4		421-06-41720	Cable	1	90216-
5		08028-HE060	Cable, Battery	1	90216-
6		421-06-41730	Cable	1	90216-
7		04434-51012	Clip	1	90216-
8		01010-81020	Bolt	1	90216-
9		01643-31032	Washer	1	90216-
10		421-06-41781	Cable	1	90841-
11		04434-51412	Clip	1	90216-
12		04434-53212	Clip	1	90216-
13		07095-20523	Cushion	1	90216-
14		01010-81030	Bolt	1	90216-
15		01643-31032	Washer	1	90216-
16		08034-40521	Band	1	90216-

FIG. E0202-004007A Rear Wiring Harness (Without Emergency Steering, Automatic Control Type) (Ground Cable)

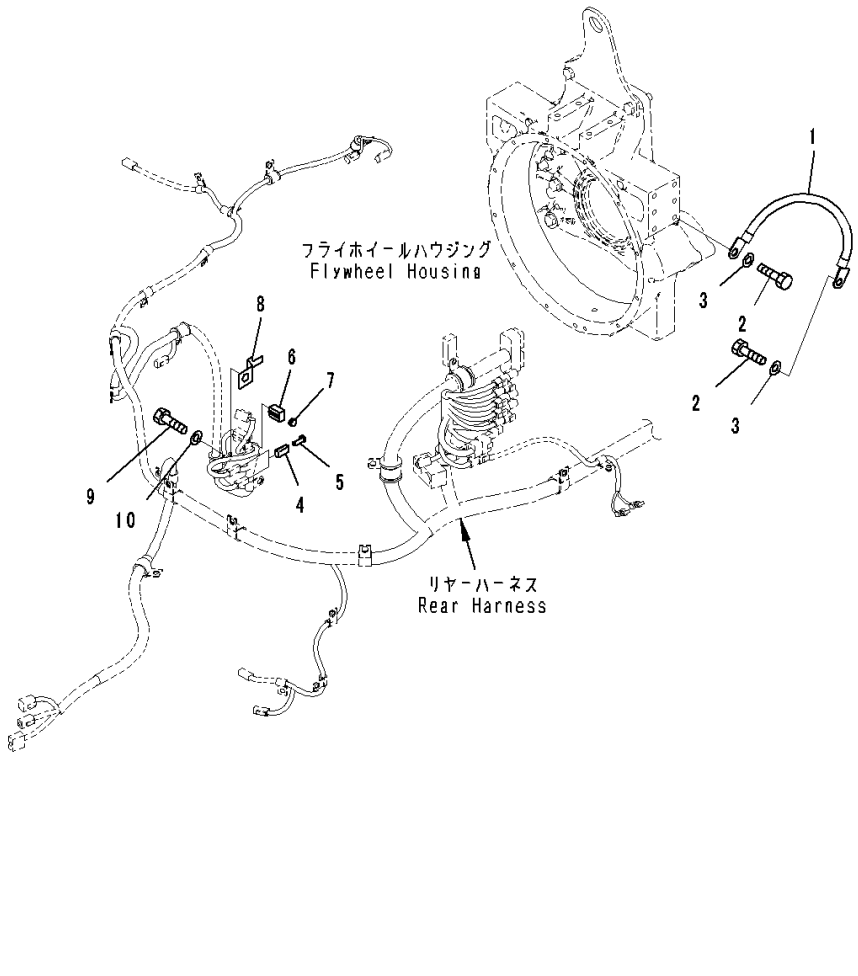

Index	Code	Part Number	Description	Qty	Serial Number
1		421-06-42760	Cable	1	90216-
2		01010-81425	Bolt	2	90371-
3		01643-31445	Washer, Flat	2	90371-
4	C1		Connector	2	90216-
5		08191-00770	Plug, Connector	4	90216-
6		08055-00282	Connector	1	90216-
7		08055-00070	Connector Plug	2	90216-
8		08053-01510	Clip	1	90216-
9		01010-81020	Bolt	1	90216-
10		01643-31032	Washer	1	90216-

FIG. E0202-003004 Rear Wiring Harness (With Emergency Steering, Automatic Control Type) (Wiring Harness and Relay)

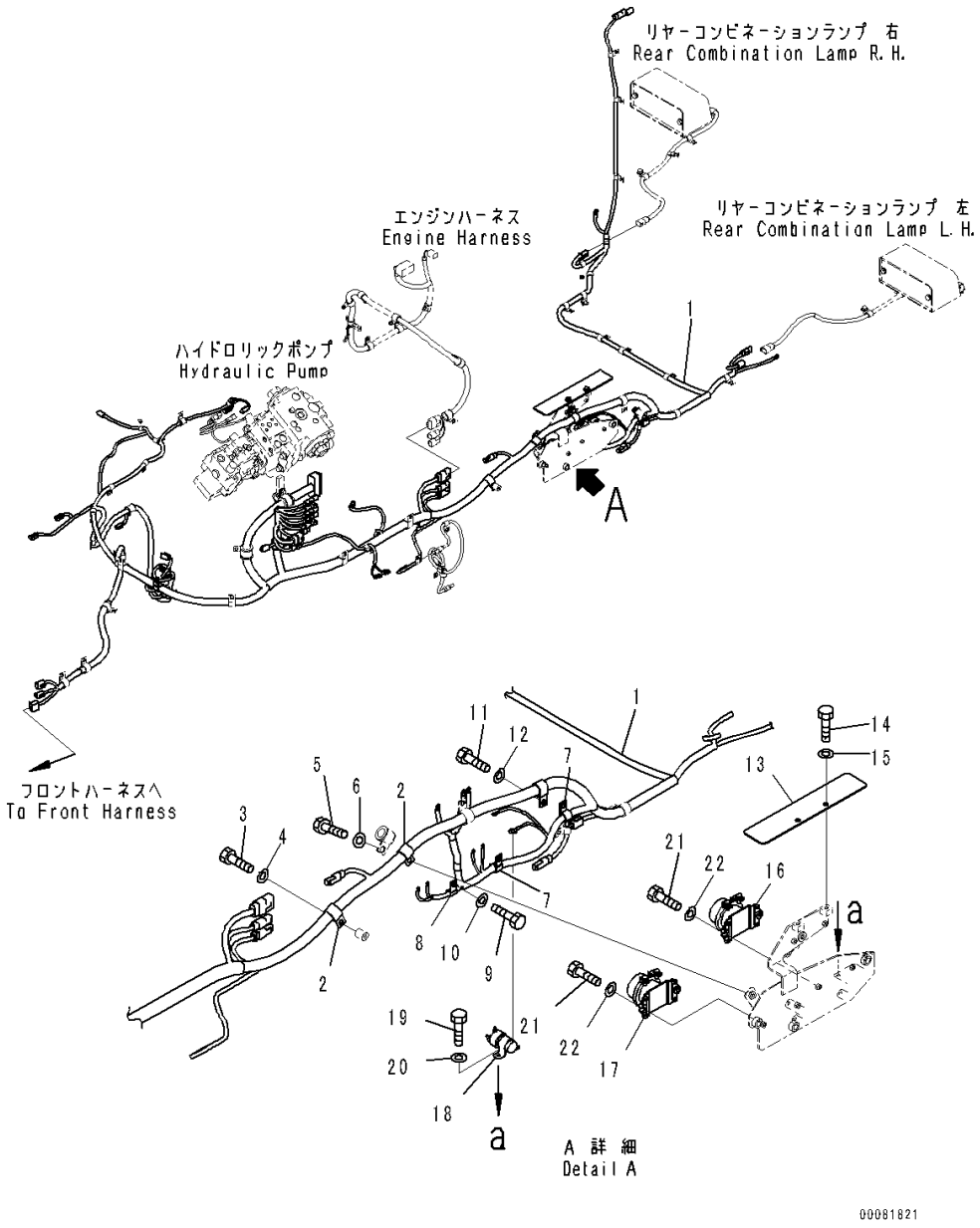

Index	Code	Part Number	Description	Qty	Serial Number
1		421-06-42381	Wiring Harness	1	90569-
		21J-06-13661	• Diode	1	90216-
2		04434-52712	Clip	2	90216-
3		01010-81020	Bolt	1	90216-
4		01643-31032	Washer	1	90216-
5		01010-81025	Bolt	1	90216-
6		01643-31032	Washer	1	90216-
7		04434-51712	Clip	2	90216-
8		04434-51012	Clip	1	90216-
9		01010-81020	Bolt	2	90216-
10		01643-31032	Washer	2	90216-
11		01010-81025	Bolt	1	90216-
12		01643-31032	Washer	1	90216-
13		421-06-42910	Plate	1	90216-
14		01010-81020	Bolt	2	90216-
15		01643-31032	Washer	2	90216-
16		08088-30000	Switch, Battery Relay	1	90216-
17		561-06-61510	Relay	1	90216-
18		600-815-2170	Switch, Heater	1	90216-
19		01010-80616	Bolt	2	90216-
20		01643-30623	Washer	2	90216-
21		01010-80830	Bolt	4	90216-
22		01643-30823	Washer	4	90216-

FIG. E0202-003006 Rear Wiring Harness (With Emergency Steering, Automatic Control Type) (Wiring Harness)

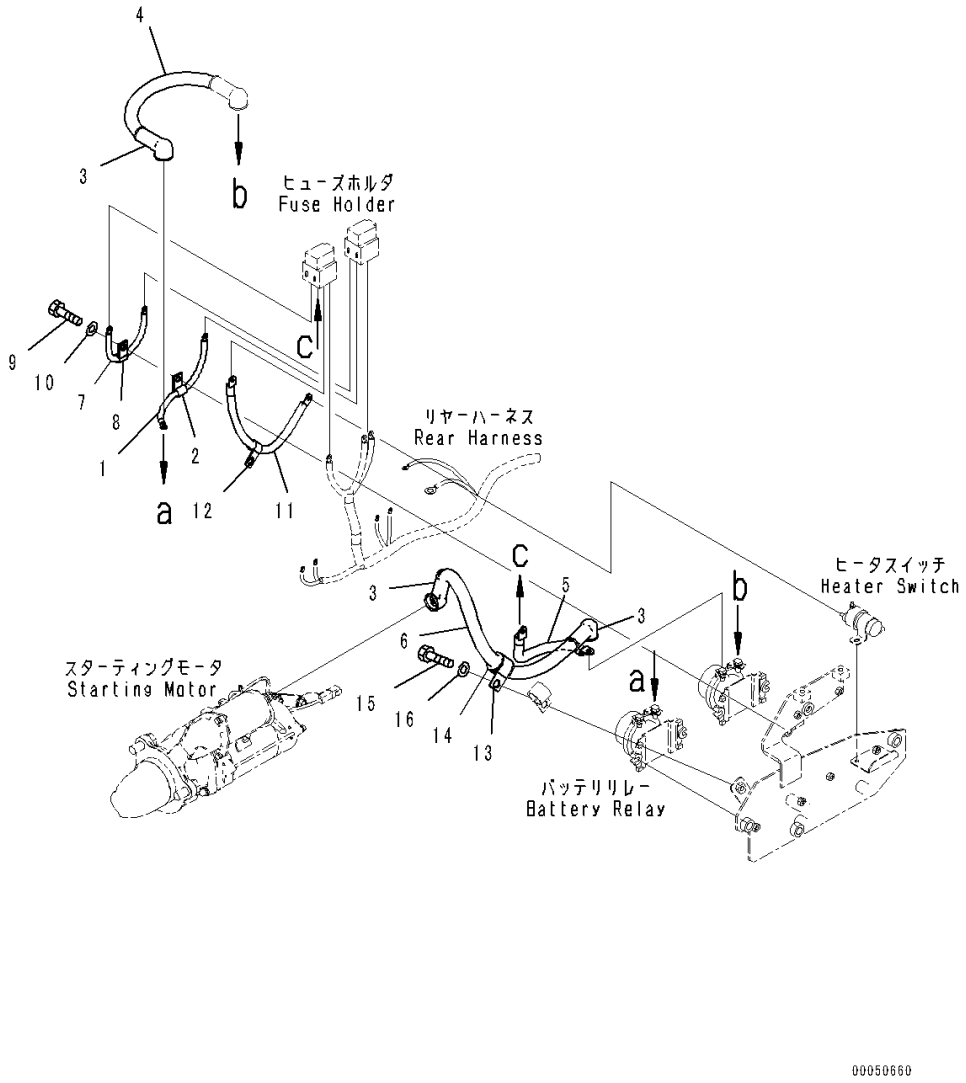

Index	Code	Part Number	Description	Qty	Serial Number
1		423-06-34650	Wire	1	90216-
2		04434-51012	Clip	1	90216-
3		08038-00035	Cap, Terminal	3	90216-
4		421-06-41840	Cable	1	90216-
5		421-06-41720	Cable	1	90216-
6		08028-HE060	Cable, Battery	1	90216-
7		421-06-41730	Cable	1	90216-
8		04434-51012	Clip	1	90216-
9		01010-81020	Bolt	1	90216-
10		01643-31032	Washer	1	90216-
11		421-06-41781	Cable	1	90841-
12		04434-51412	Clip	1	90216-
13		04434-53212	Clip	1	90216-
14		07095-20523	Cushion	1	90216-
15		01010-81030	Bolt	1	90216-
16		01643-31032	Washer	1	90216-

FIG. E0202-003007A Rear Wiring Harness (With Emergency Steering, Automatic Control Type) (Ground Cable)

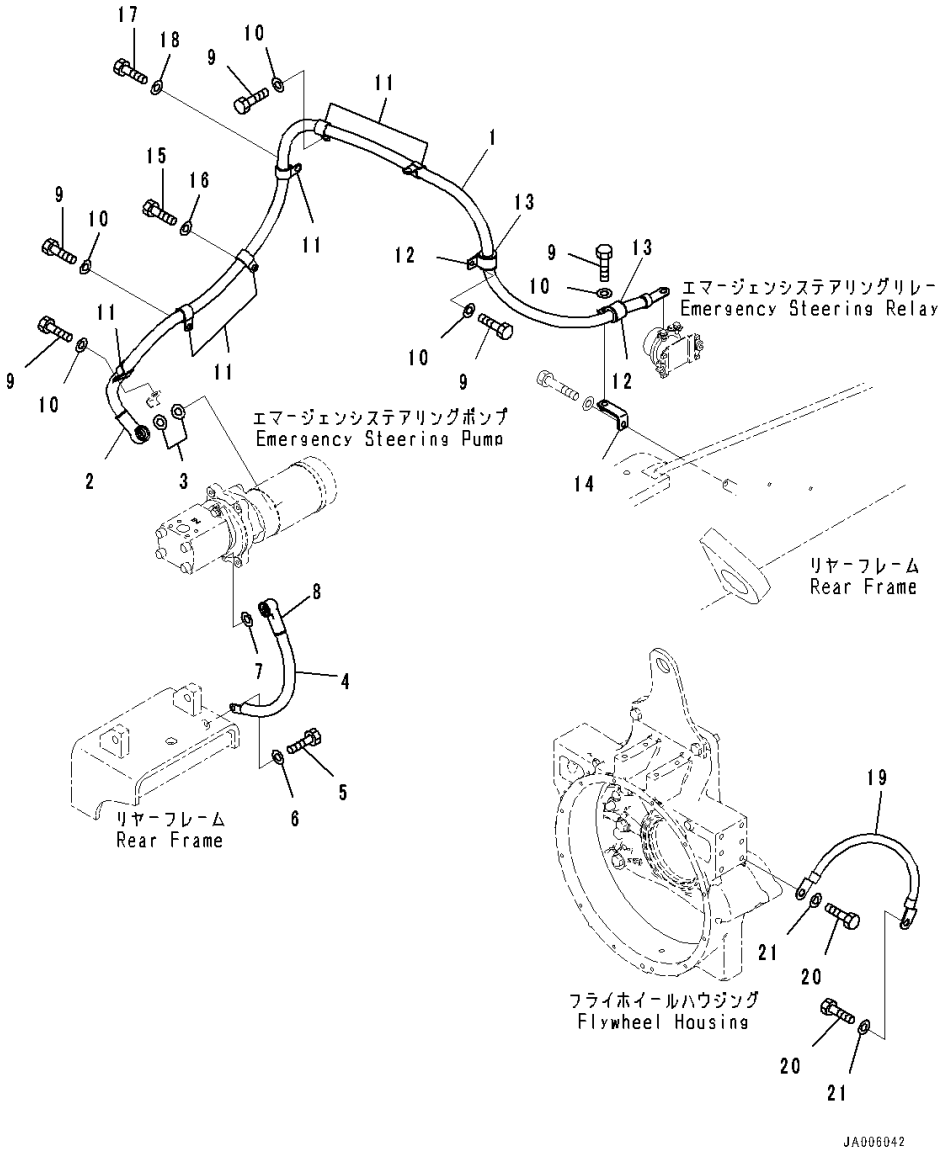

Index	Code	Part Number	Description	Qty	Serial Number
1		421-06-42450	Cable	1	90216-
2		11Y-06-11630	Cap	1	90216-
3		01643-30823	Washer	2	90216-
4		08028-EE040	Cable, Ground	1	90216-
5		01010-81016	Bolt	1	90216-
6		01643-31032	Washer	1	90216-
7		01643-30823	Washer	1	90216-
8		08038-00035	Cap, Terminal	1	90216-
9		01010-81020	Bolt	6	90216-
10		01643-31032	Washer	6	90216-
11		600-051-2240	Clip	5	90216-
12		04434-53212	Clip	2	90216-
13		07095-20523	Cushion	2	90216-
14		421-06-42290	Bracket	1	90216-
15		01010-81016	Bolt	1	90216-
16		01643-31032	Washer	1	90216-
17		01010-81025	Bolt	1	90216-
18		01643-31032	Washer	1	90216-
19		421-06-42760	Cable	1	90216-
20		01010-81425	Bolt	2	90371-
21		01643-31445	Washer, Flat	2	90371-

FIG. E0300-006001 Front Lamp (L.H.)

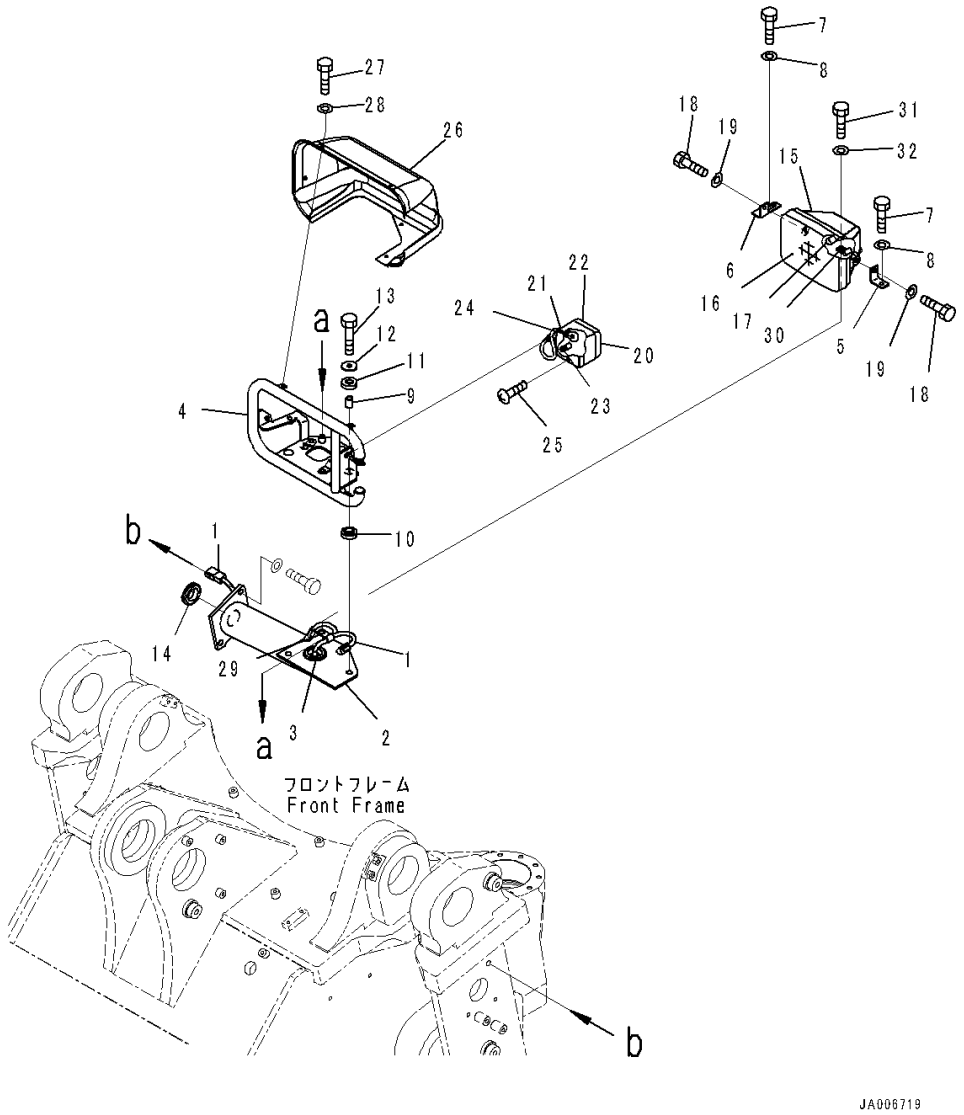

Index	Code	Part Number	Description	Qty	Serial Number
1		424-06-43151	Wiring Harness	1	90435-
2		421-06-43110	Support	1	90435-
3		08037-03614	Grommet	1	90435-
4		423-06-43130	Bracket	1	90435-
5		421-06-23552	Plate	1	90435-
6		421-06-23630	Plate	1	90435-
7		01010-81025	Bolt	2	90435-
8		01643-31032	Washer	2	90435-
9		417-54-13470	Spacer	3	90435-
10		419-43-17930	Cushion	3	90435-
11		415-64-13130	Cushion	3	90435-
12		419-43-17920	Washer	3	90435-
13		01010-81250	Bolt	3	90435-
14		08037-03614	Grommet	1	90435-
15		424-06-43211	Lamp	1	90435-
16		424-06-23220	• Lens, Clear	1	90435-
17		424-06-23230	• Bulb, 75/70watt	1	90435-
18		01010-80825	Bolt	2	90435-
19		01602-20825	Washer	2	90435-
20		424-06-43221	Lamp	1	90435-
21		41G-06-13210	• Lens, Orange, Front	1	90435-
22		41G-06-13220	• Lens, Orange, Rear	1	90435-
23		41G-06-13230	• Bulb, 5watt	1	90435-
24		08105-12420	• Bulb, 25watt	1	90435-
25		01220-40425	• Screw	4	90435-
26		421-06-23611	Cover	1	90435-
27		01010-80616	Bolt	5	90435-
28		01643-30623	Washer	5	90435-
29		04434-51010	Clip	1	90435-
30		04434-50610	Clip	1	90435-
31		01010-80820	Bolt	1	90435-
32		01643-30823	Washer	1	90435-

FIG. E0300-006002 Front Lamp (R.H.)

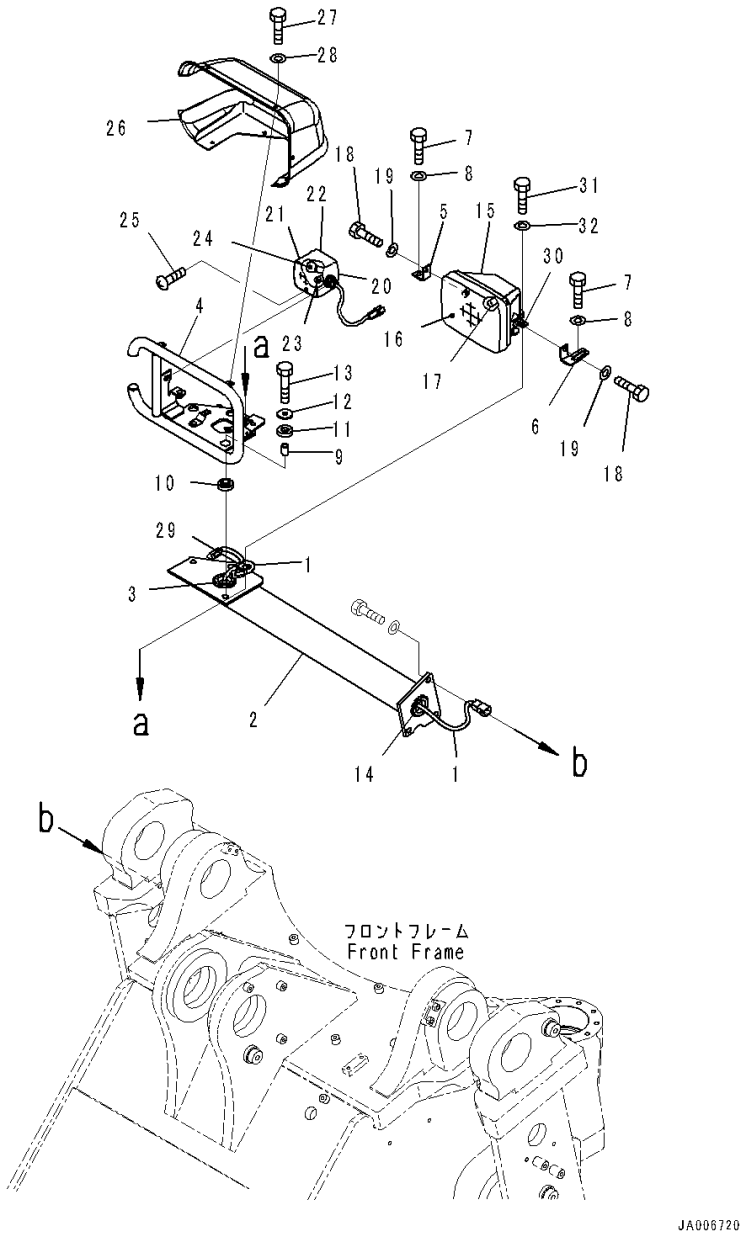

Index	Code	Part Number	Description	Qty	Serial Number
1		424-06-43151	Wiring Harness	1	90435-
2		421-06-43120	Support	1	90435-
3		08037-03614	Grommet	1	90435-
4		423-06-43140	Bracket	1	90435-
5		421-06-23552	Plate	1	90435-
6		421-06-23640	Plate	1	90435-
7		01010-81025	Bolt	2	90435-
8		01643-31032	Washer	2	90435-
9		417-54-13470	Spacer	3	90435-
10		419-43-17930	Cushion	3	90435-
11		415-64-13130	Cushion	3	90435-
12		419-43-17920	Washer	3	90435-
13		01010-81250	Bolt	3	90435-
14		08037-03614	Grommet	1	90435-
15		424-06-43211	Lamp	1	90435-
16		424-06-23220	• Lens, Clear	1	90435-
17		424-06-23230	• Bulb, 75/70watt	1	90435-
18		01010-80825	Bolt	2	90435-
19		01602-20825	Washer	2	90435-
20		424-06-43221	Lamp	1	90435-
21		41G-06-13210	• Lens, Orange	1	90435-
22		41G-06-13220	• Lens, Orange	1	90435-
23		41G-06-13230	• Bulb, 5watt	1	90435-
24		08105-12420	• Bulb, 25watt	1	90435-
25		01220-40425	• Screw	4	90435-
26		421-06-23621	Cover	1	90435-
27		01010-80616	Bolt	5	90435-
28		01643-30623	Washer	5	90435-
29		04434-51010	Clip	1	90435-
30		04434-50610	Clip	1	90435-
31		01010-80820	Bolt	1	90435-
32		01643-30823	Washer	1	90435-

FIG. E0300-006003 Front Lamp (Bolt)

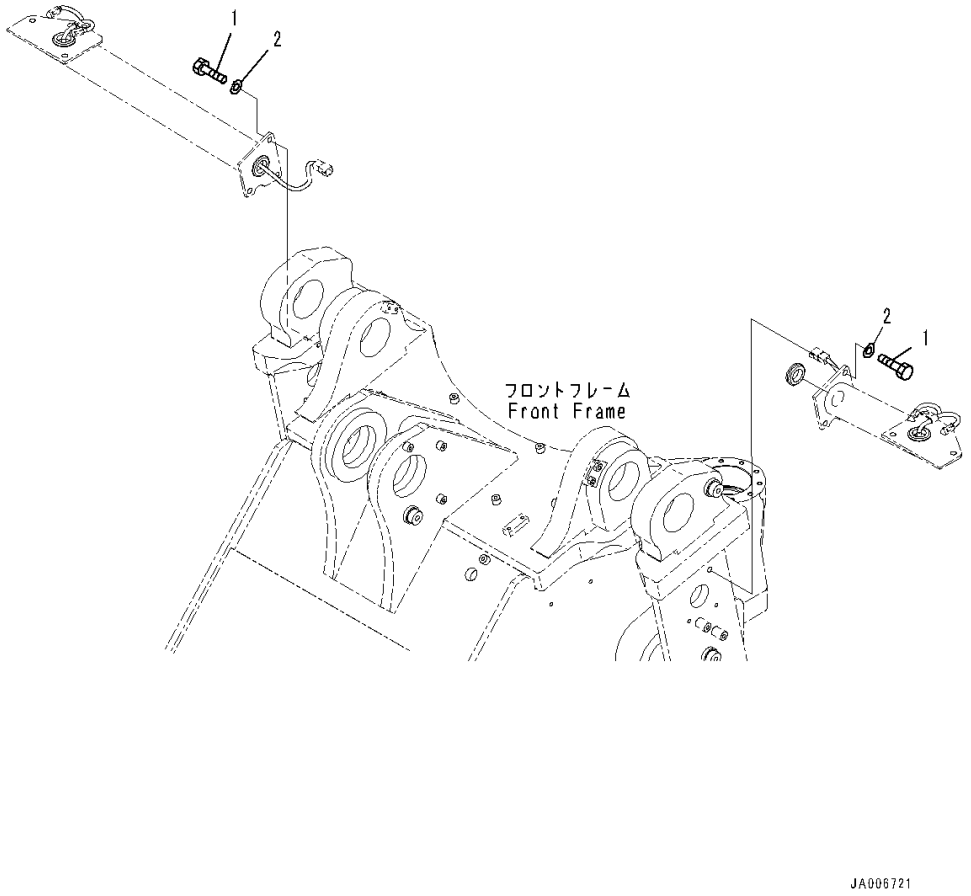

Index	Code	Part Number	Description	Qty	Serial Number
1		01010-81230	Bolt	6	90435-
2		01643-31232	Washer	6	90435-

FIG. E0340-001001 Front Working Lamp (Without Amber Color Warning Beacon, Japan Crushed Stone Association Arrangement)

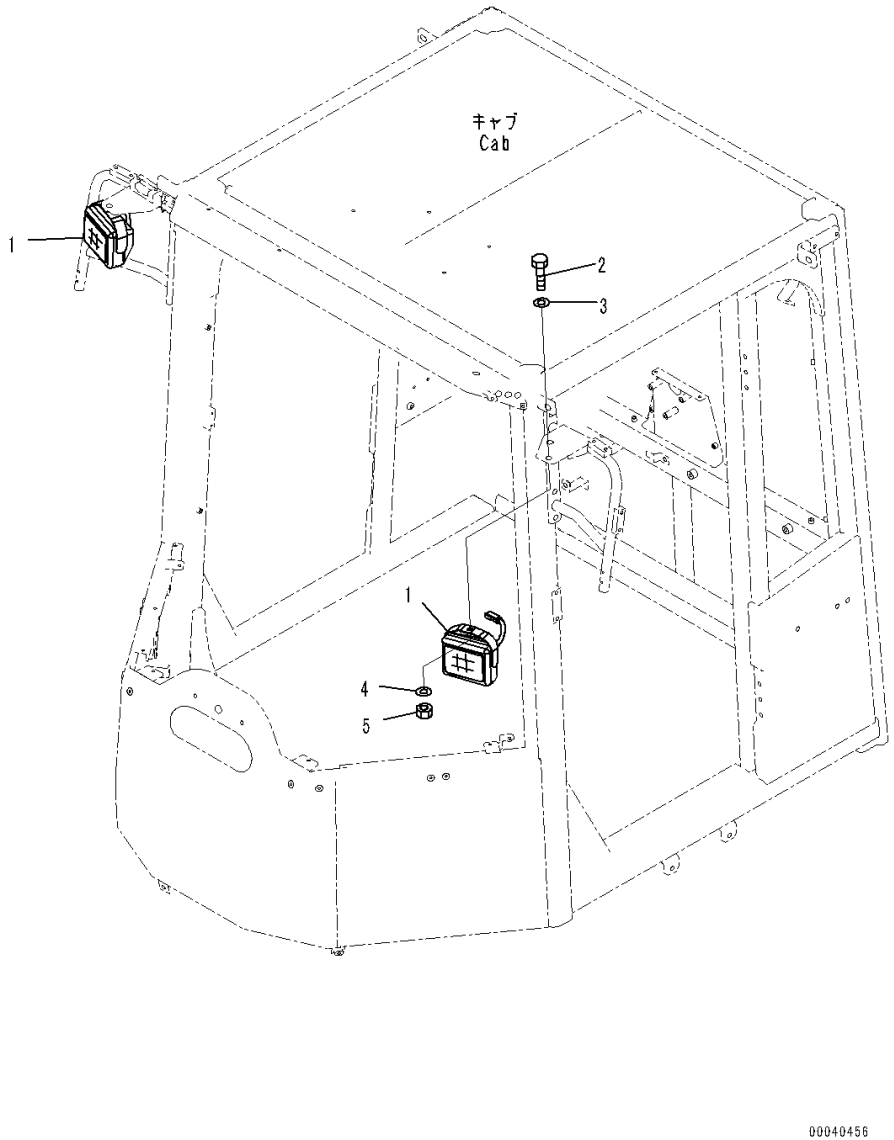

Index	Code	Part Number	Description	Qty	Serial Number
1		423-06-33130	Lamp Assembly, Working	2	90216-
		421-06-23320	• Lens	1	90216-
		421-06-23330	• Bulb, 70watt	1	90216-
2		01010-81225	Bolt	2	90216-
3		01643-31232	Washer	2	90216-
4		01643-31232	Washer	2	90216-
5		01580-11210	Nut	2	90216-

FIG. E0340-010001 Working Lamp (With Amber Color Warning Beacon Guard) (Working Lamp, Front)

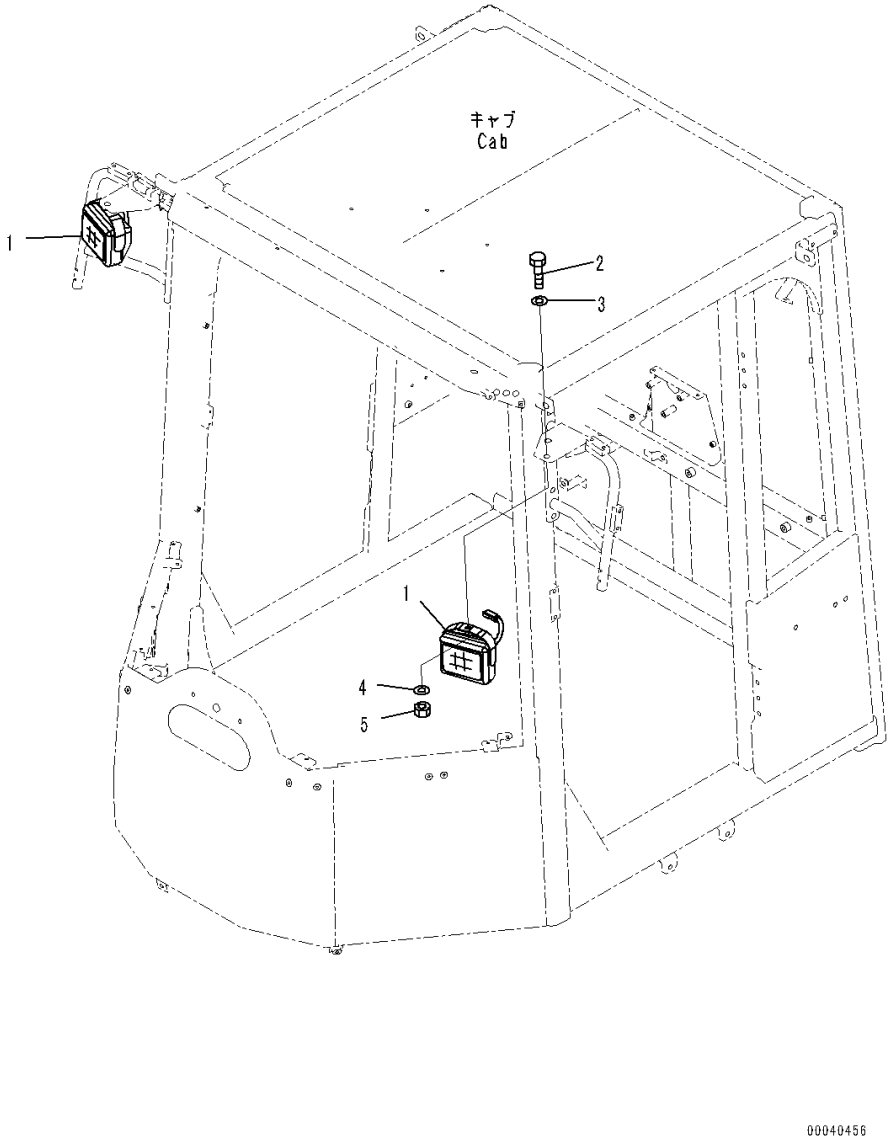

Index	Code	Part Number	Description	Qty	Serial Number
1		423-06-33130	Lamp Assembly, Working	2	90216-
		421-06-23320	• Lens	1	90216-
		421-06-23330	• Bulb, 70watt	1	90216-
2		01010-81225	Bolt	2	90216-
3		01643-31232	Washer	2	90216-
4		01643-31232	Washer	2	90216-
5		01580-11210	Nut	2	90216-

FIG. E0340-010002 Working Lamp (With Amber Color Warning Beacon Guard) (Beacon Lamp Guard)

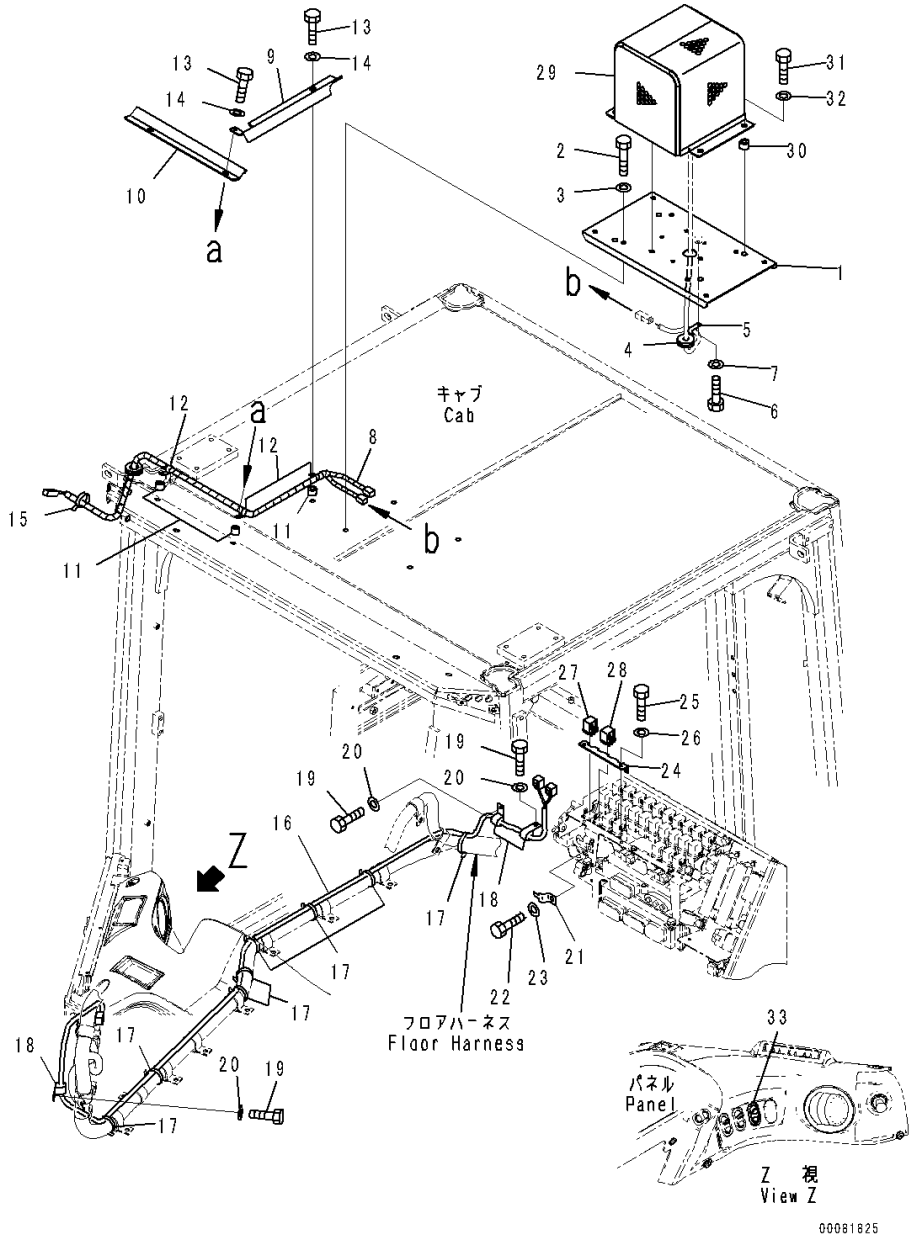

Index	Code	Part Number	Description	Qty	Serial Number
1		423-957-4181	Bracket	1	90689-
2		01010-80860	Bolt	4	90216-
3		01643-30823	Washer	4	90216-
4		423-43-18430	Grommet	1	90216-
5		04434-51008	Clip	1	90216-
6		01010-80816	Bolt	1	90216-
7		01643-30823	Washer	1	90216-
8		423-957-4132	Wiring Harness	1	90216-
9		423-957-4152	Cover	1	91083-
10		423-957-4162	Cover	1	91083-
11		421-06-12780	Spacer	3	90216-
12		04434-51012	Clip	3	90216-
13		01010-80835	Bolt	3	90216-
14		01643-30823	Washer	3	90216-
15		08034-40521	Band	1	90216-
16		423-06-45181	Wiring Harness	1	90216-
17		08034-40521	Band	8	90216-
18		04434-51410	Clip	3	90216-
19		01010-81020	Bolt	3	90216-
20		01643-31032	Washer	3	90216-
21		08053-01510	Clip	1	90216-
22		01010-81020	Bolt	1	90216-
23		01643-31032	Washer	1	90216-
24		569-06-61180	Bracket	1	90216-
25		01010-80616	Bolt	2	90216-
26		01643-30623	Washer	2	90216-
27		569-06-61960	Relay	1	90216-
28		569-06-61970	Relay	1	90216-
29		207-54-13650	Cover	1	90216-
30		201-03-29160	Spacer	4	90216-
31		01010-81040	Bolt	4	90216-
32		01643-31032	Washer	4	90216-
33		423-06-45590	Switch, Beacon Lamp	1	90216-

FIG. E0410-002001 Horn

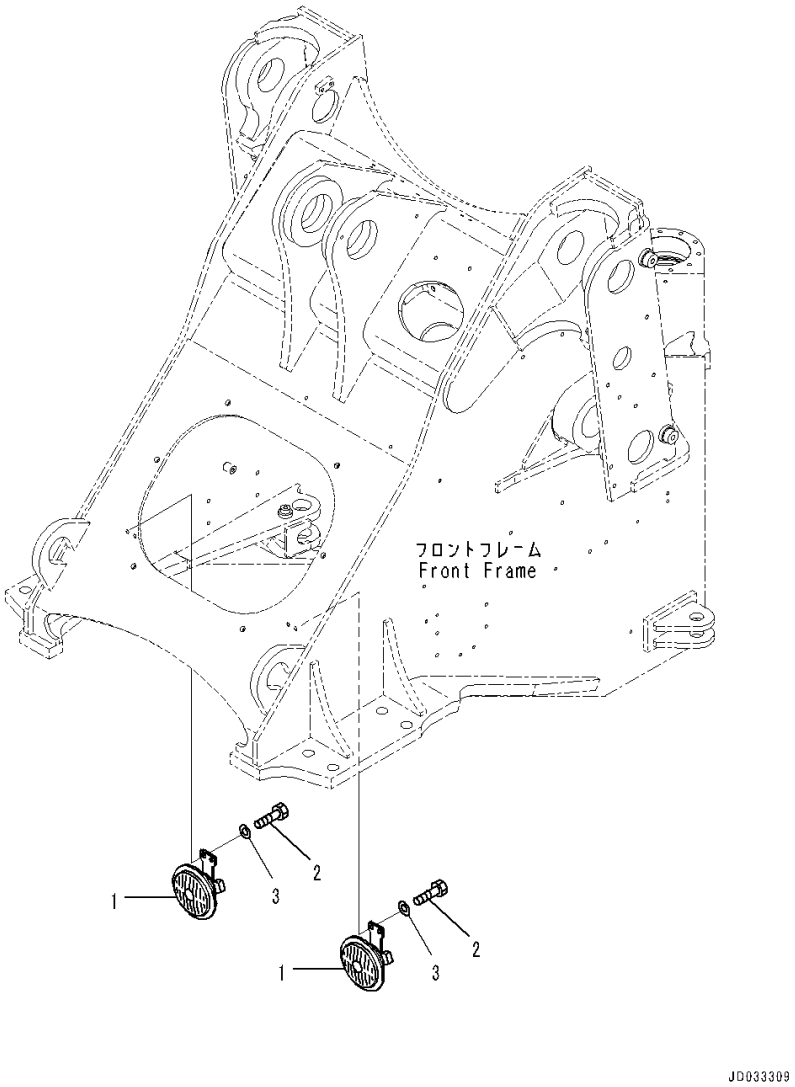

Index	Code	Part Number	Description	Qty	Serial Number
1		421-06-41151	Horn	1	90216-
2		01010-80820	Bolt	4	90216-
3		01643-30823	Washer	4	90216-

POWER TRANSMITTING SYSTEM

FIG. F4200-003001A Propeller Shaft (Shaft and Bolt)

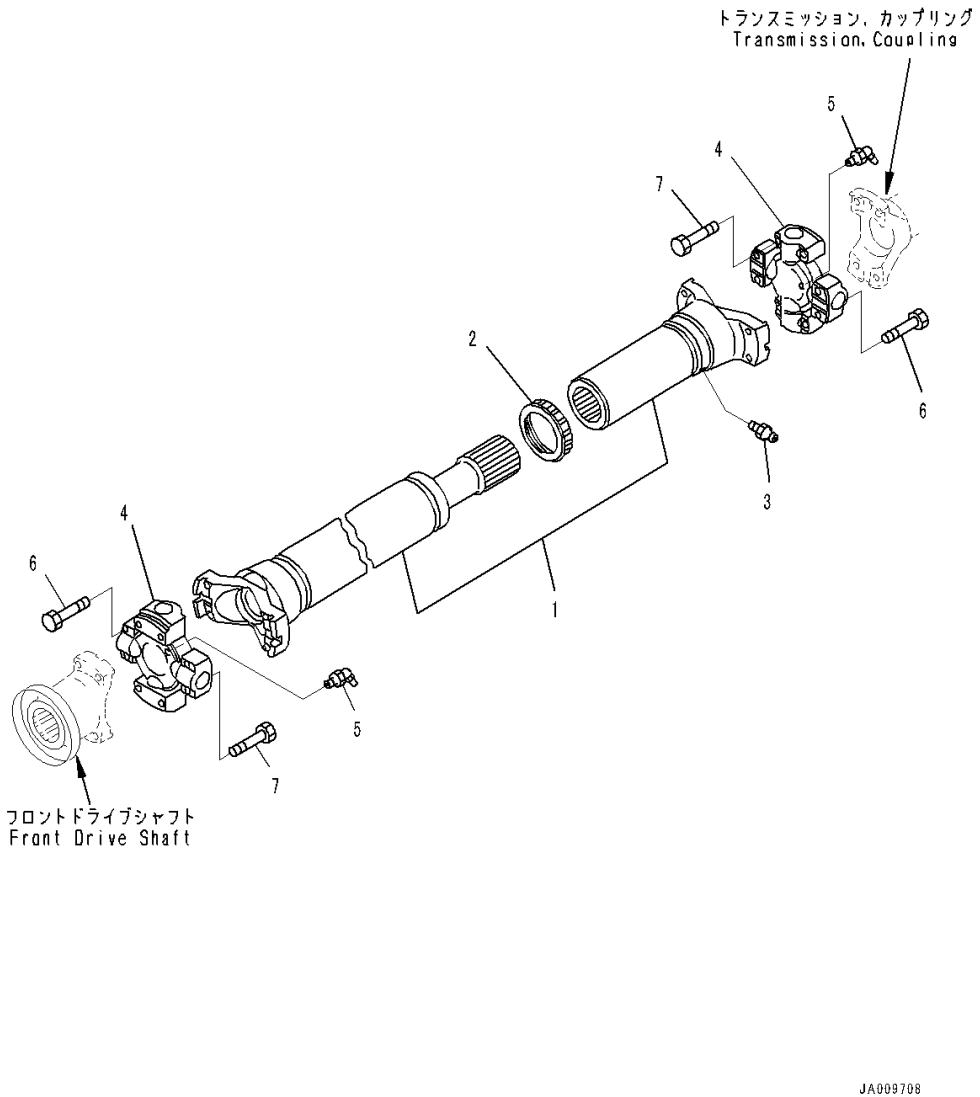

Index	Code	Part Number	Description	Qty	Serial Number
		421-20-32712	Propeller Shaft Assembly	1	90871-
1		421-20-32781	• Yoke and Shaft	1	90871-
2		421-20-32740	• Seal	1	90216-
3		423-20-32750	• Fitting	1	90216-
4		421-20-32621	• Spider Assembly	2	90216-
5		423-20-32631	• Fitting, Grease	2	90216-
6		421-20-12690	• Bolt	8	90216-
7		01050-61260	Bolt	8	90216-

FIG. F4200-003002 Propeller Shaft (Front)

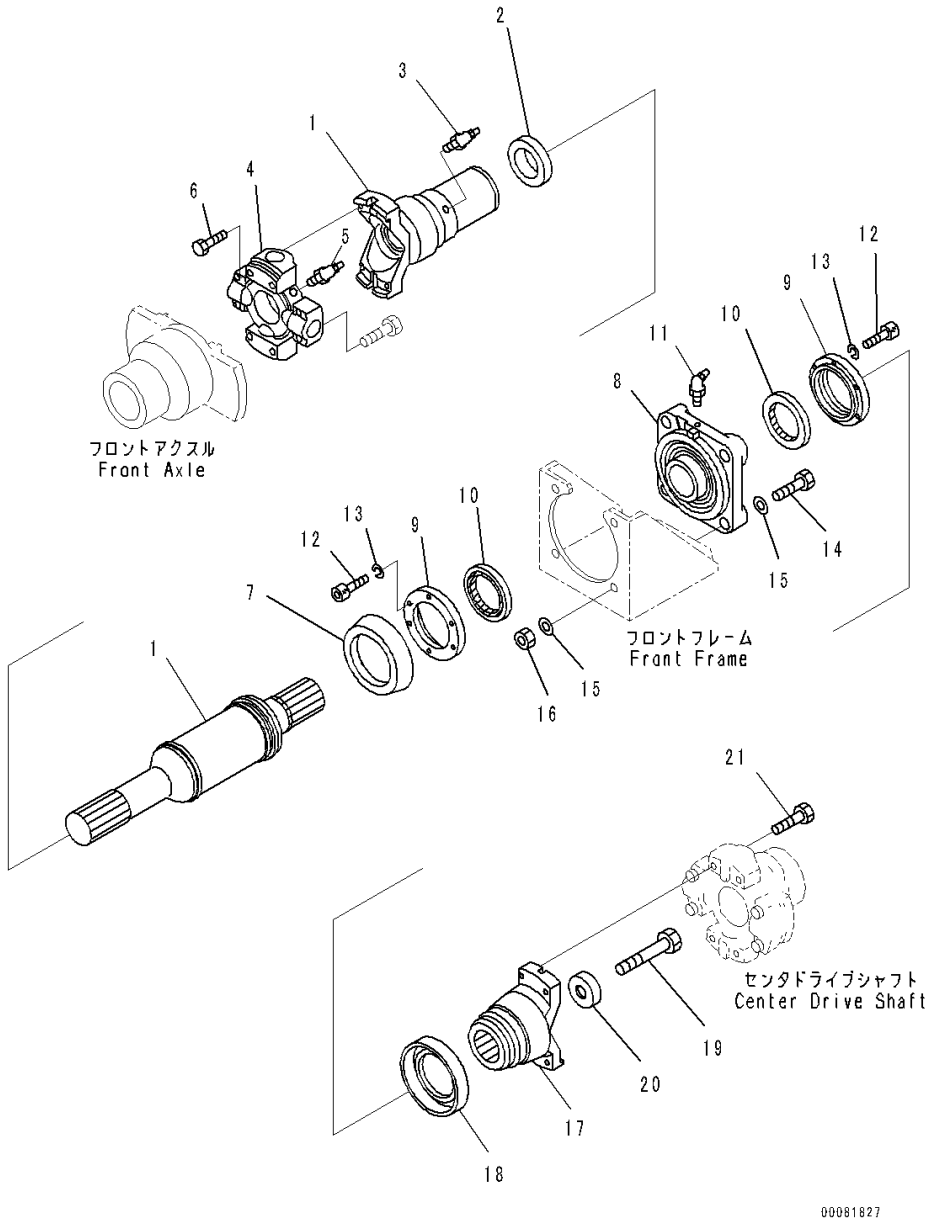

Index	Code	Part Number	Description	Qty	Serial Number
		421-20-33020	Propeller Shaft	1	90216-
		421-20-33810	• Propeller Shaft	1	90216-
1		421-20-33820	• • Yoke and Shaft	1	90216-
2		423-20-32740	• • Seal	1	90216-
3		423-20-32750	• • Fitting	1	90216-
4		421-20-33621	• • Spider Assembly	1	90216-
5		423-20-32631	• • • Fitting, Grease	1	90216-
6		421-20-12690	• • Bolt	4	90216-
7		421-20-13540	• Deflector	1	90216-
8		421-20-15123	Bearing	1	90216-
9		421-20-15630	• Cover	2	90216-
10		421-20-15620	• Seal	2	90216-
11		07020-00675	• Fitting, Grease	1	90216-
12		01252-40625	• Bolt, Hexagon Socket Head	12	90216-
13		01602-20619	• Washer	12	90216-
14		01010-62075	Bolt	4	90216-
15		01643-32060	Washer	8	90216-
16		01580-02016	Nut	4	90216-
		421-20-13030	Coupling Assembly	1	90216-
17	C1		• Coupling	1	90216-
18		421-20-13540	• Deflector	1	90216-
19		01011-62405	Bolt	1	90216-
20		424-20-13520	Holder	1	90216-
21		01050-61260	Bolt	4	90216-

FIG. F4200-003003 Propeller Shaft (Rear)

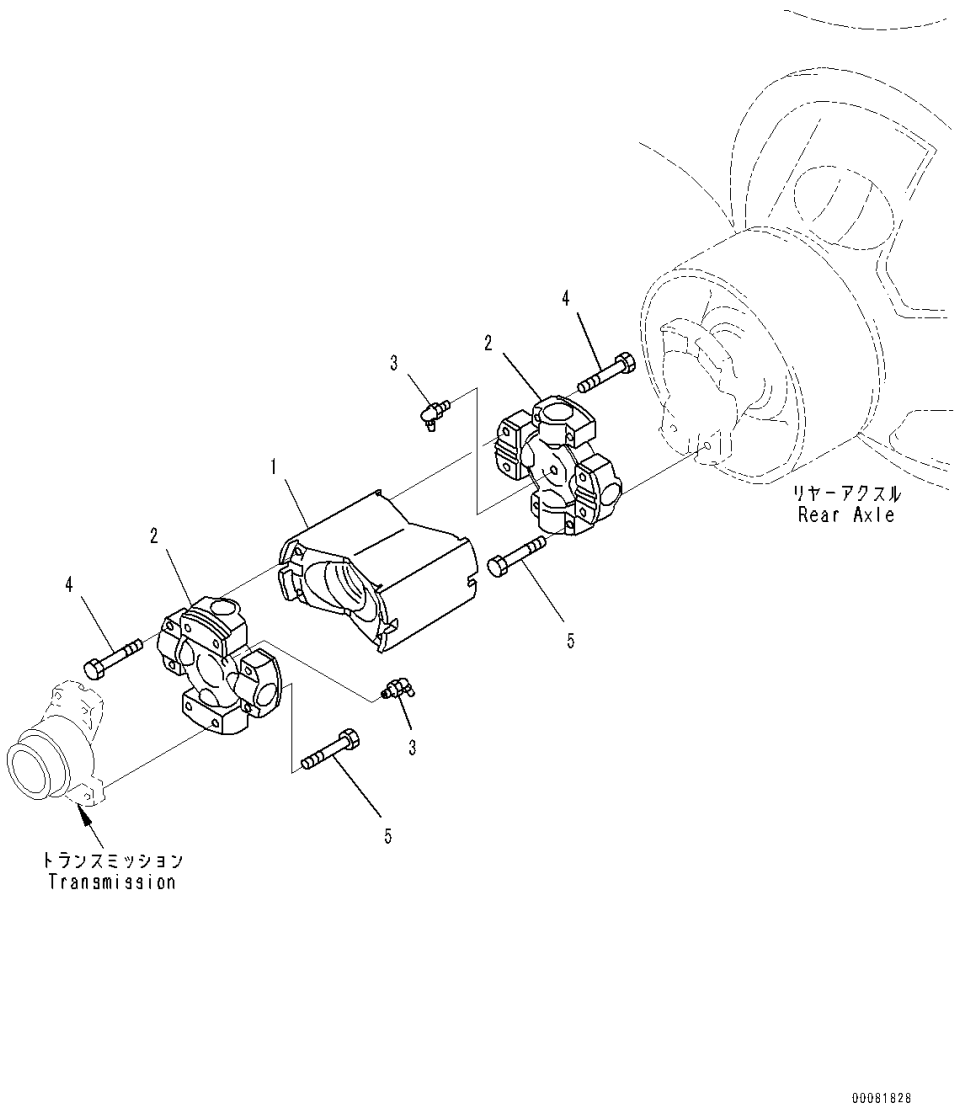

Index	Code	Part Number	Description	Qty	Serial Number
		421-20-34530	Propeller Shaft	1	90216-
1		421-20-34670	• Shaft	1	90216-
2		421-20-33621	• Spider Assembly	2	90216-
3		423-20-32631	• • Fitting, Grease	1	90216-
4		421-20-12690	• Bolt	8	90216-
5		01050-61260	Bolt	8	90216-

FIG. F4300-004001 Torque Converter and Transmission (With Lockup Type) (Pump and Turbine)

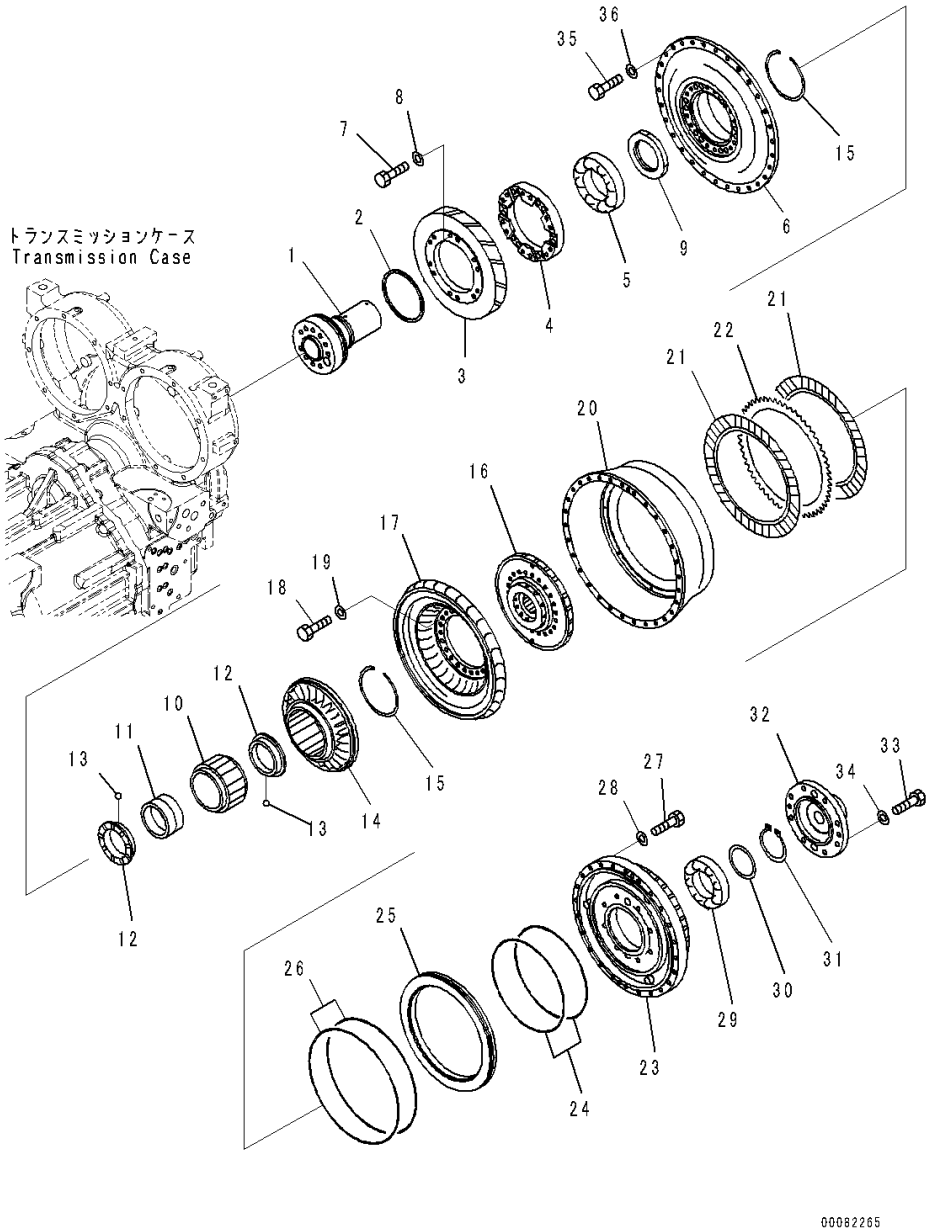

Index	Code	Part Number	Description	Qty	Serial Number
		714-07-40011	Transmission Assembly	1	90784-
		711-47-71010	• Torque Converter	1	90216-
1		711-47-72550	• • Shaft	1	90216-
2		195-13-12711	• • Seal Ring, (Kit : K01, K02)	1	90216-
3		711-47-71151	• • Gear	1	90216-
4		711-47-71191	• • Guide	1	90216-
5		568-13-13351	• • Bearing	1	90216-
6		711-47-71411	• • Pump	1	90216-
7		01010-81075	• • Bolt	12	90216-
8		01643-31032	• • Washer	12	90216-
9		23W-13-12680	• • Nut	1	90216-
10		711-47-72120	• • Race	1	90216-
11		711-73-22540	• • Free Wheel	1	90216-
12		425-13-32140	• • Bushing	2	90216-
13		04260-00635	• • Ball, Steel	2	90216-
14		711-47-71431	• • Stator	1	90216-
15		567-13-11170	• • Ring, Snap	2	90216-
16		711-47-71571	• • Boss	1	90216-
17		23W-13-11520	• • Turbine	1	90216-
18		01010-81030	• • Bolt	22	90216-
19		01643-31032	• • Washer	22	90216-
20		711-47-77211	• • Case	1	90216-
21		424-15-12711	• • Disc	2	90216-
22		135-15-22730	• • Plate	1	90216-
23		711-47-77112	• • Housing	1	90216-
24		113-15-12840	• • Seal Ring, (Kit : K01, K02)	2	90216-
25		711-47-77230	• • Piston	1	90216-
26		144-15-22881	• • Seal Ring, (Kit : K01, K02)	2	90216-
27		01010-81050	• • Bolt	24	90216-
28		01643-31032	• • Washer	24	90216-
29		711-16-11560	• • Bearing	1	90216-
30		711-53-11770	• • Plate	1	90216-
31		04064-08025	• • Ring, Snap	1	90216-
32		711-47-71271	• • Cover	1	90216-
33		01010-81240	• • Bolt	8	90216-
34		01643-31232	• • Washer	8	90216-
35		01010-81030	• • Bolt	30	90216-
36		01643-31032	• • Washer	30	90216-

FIG. F4300-004002 Torque Converter and Transmission (Forward and 1st Housing)

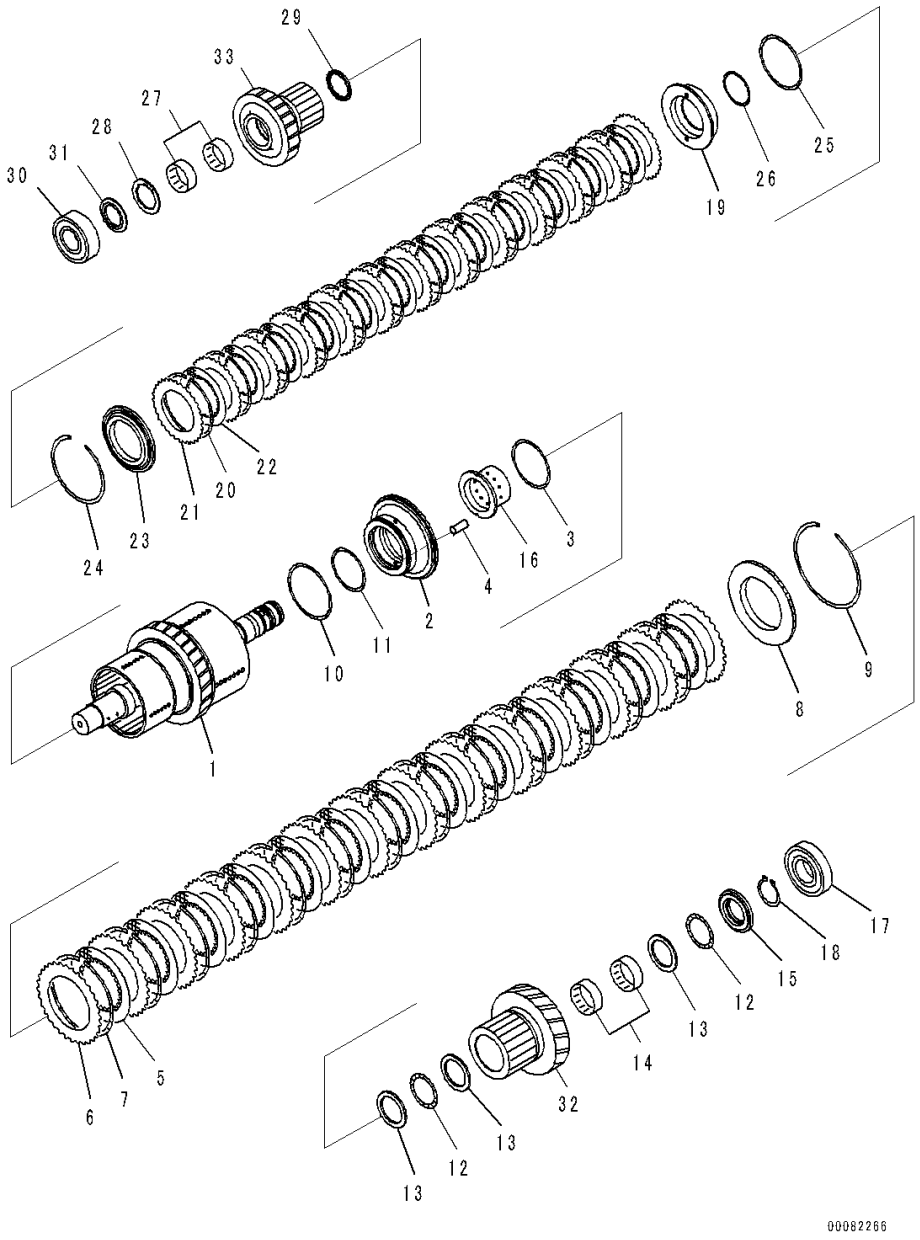

Index	Code	Part Number	Description	Qty	Serial Number
		Note: This list covers following specifications.			
		With Lockup Type			
		Without Lockup Type			
		714-07-40011	Transmission Assembly ..... With Lockup Type	1	90784-
		714-07-40001	Transmission Assembly ..... Without Lockup Type	1	90784-
		714-07-42010	• Clutch Assembly	1	90216-
1		714-07-42111	• • Shaft and Cylinder Assembly, Front	1	90216-
	C1		• • • Shaft	1	90216-
	C1		• • • Plug	2	90216-
	C1		• • • Housing	1	90216-
2		714-07-42650	• • Piston	1	90216-
3		362-15-19520	• • Ring, Snap	1	90216-
4		04020-00514	• • Pin, Dowel	2	90216-
5		714-07-49731	• • Clutch	14	90216-
6		714-07-12680	• • Plate	15	90216-
7		714-07-12691	• • Spring, Wave	14	90216-
8		714-07-12711	• • Plate	1	90216-
9		714-07-12720	• • Ring, Snap	1	90216-
10		714-08-19230	• • Seal Ring, (Kit : K01, K02, K04, K05) ..	1	90216-
11		714-07-19320	• • Seal Ring, (Kit : K01, K02, K04, K05) ..	1	90216-
12		419-15-12640	• • Bearing	2	90216-
13		714-07-46240	• • Plate	3	90216-
14		714-23-19410	• • Bearing, Needle	2	90216-
15		714-07-46111	• • Spacer	1	90216-
16		714-07-42621	• • Piston	1	90216-
17		714-07-29350	• • Bearing	1	90216-
18		04064-05520	• • Ring, Snap	1	90216-
19		714-07-42611	• • Piston	1	90216-
20		714-08-19710	• • Disc	12	90216-
21		714-08-19730	• • Plate, Separate	13	90216-
22		714-08-12911	• • Wave Spring	12	90216-
23		714-08-12610	• • Plate	1	90216-
24		714-08-19510	• • Ring, Snap	1	90216-
25		714-07-49210	• • Seal Ring, (Kit : K01, K02, K04, K05) ..	1	90216-
26		714-07-49220	• • Seal Ring, (Kit : K01, K02, K04, K05) ..	1	90216-
27		419-15-12271	• • Bearing	2	90216-
28		714-11-19510	• • Washer	1	90216-
29		714-07-49810	• • Washer	1	90216-

FIG. F4300-004002 Torque Converter and Transmission (Forward and 1st Housing)

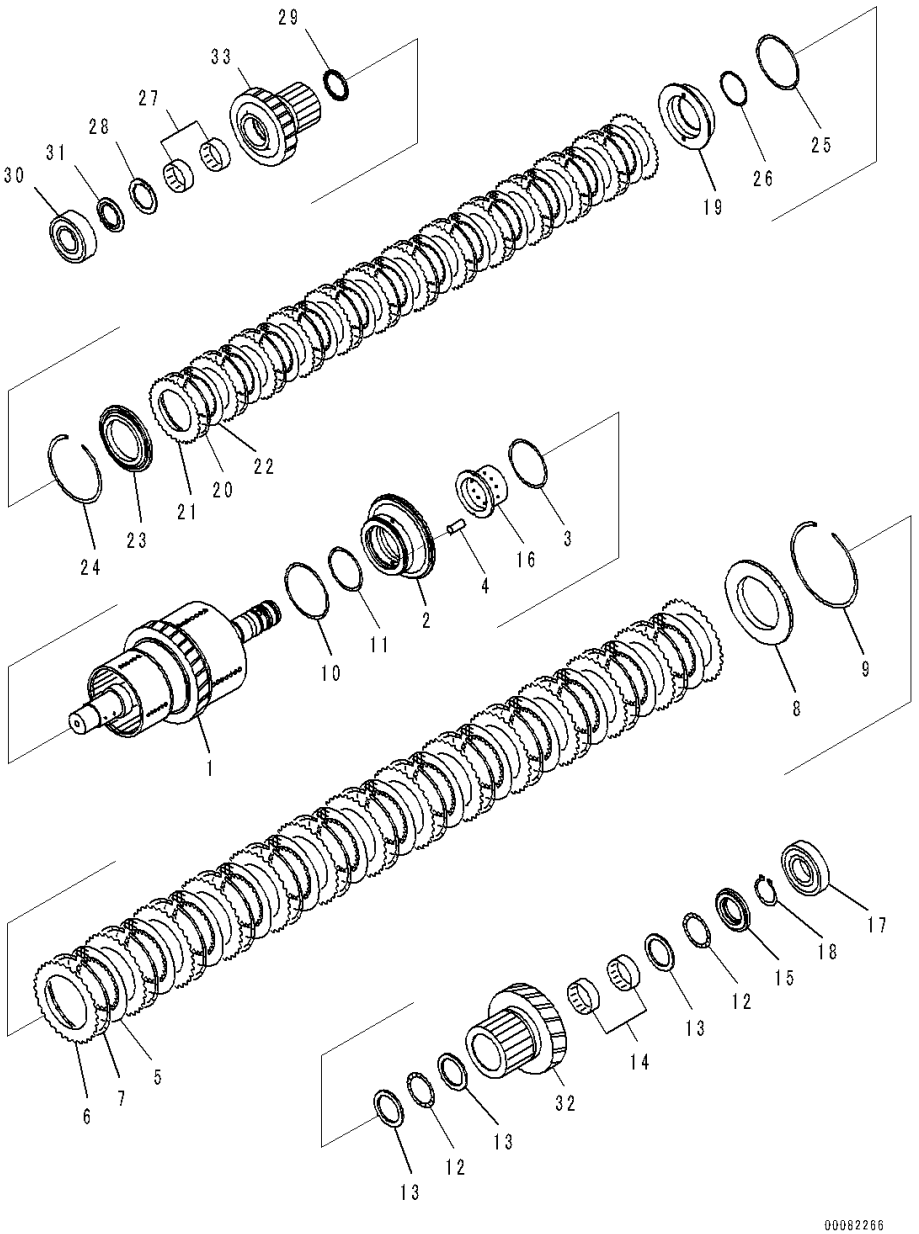

Index	Code	Part Number	Description	Qty	Serial Number
30		714-07-49650	• • Bearing	1	90216-
31		714-11-12710	• • Spacer	1	90216-
32		714-07-42411	• • Gear, Forward	1	90216-
33		714-07-42712	• • Gear, 1st	1	90216-

FIG. F4300-004003 Torque Converter and Transmission (Reverse and 2nd Housing)

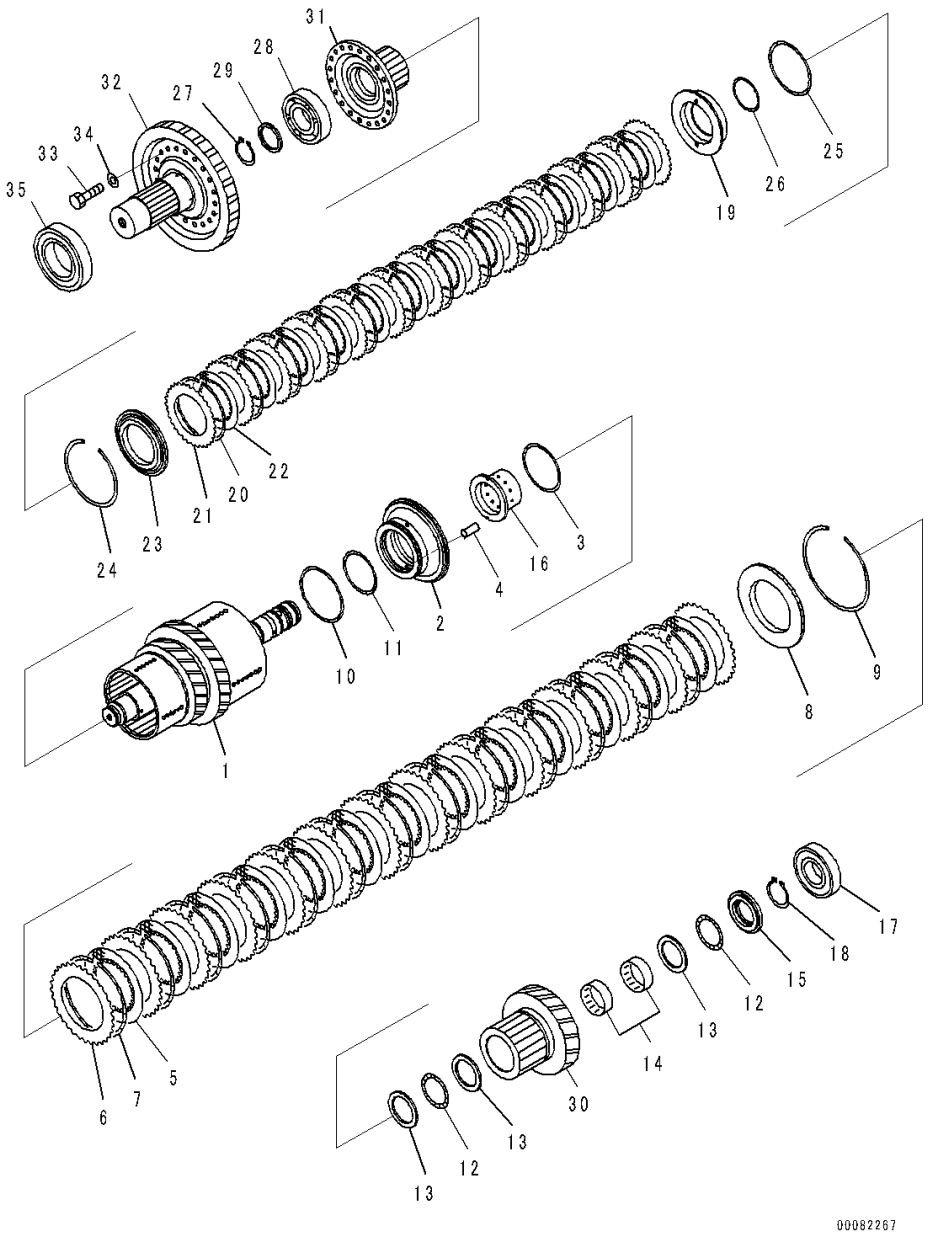

Index	Code	Part Number	Description	Qty	Serial Number
		Note: This list covers following specifications.			
		With Lockup Type			
		Without Lockup Type			
		714-07-40011	Transmission Assembly ..... With Lockup Type	1	90784-
		714-07-40001	Transmission Assembly ..... Without Lockup Type	1	90784-
		714-07-42020	• Clutch Assembly	1	90216-
1		714-07-42121	• • Shaft and Cylinder Assembly	1	90216-
	C1		• • • Shaft	1	90216-
	C1		• • • Plug	2	90216-
	C1		• • • Housing	1	90216-
2		714-07-42650	• • Piston	1	90216-
3		362-15-19520	• • Ring, Snap	1	90216-
4		04020-00514	• • Pin, Dowel	2	90216-
5		714-07-49731	• • Clutch	14	90216-
6		714-07-12680	• • Plate	15	90216-
7		714-07-12691	• • Spring, Wave	14	90216-
8		714-07-12711	• • Plate	1	90216-
9		714-07-12720	• • Ring, Snap	1	90216-
10		714-08-19230	• • Seal Ring, (Kit : K01, K02, K04, K05) ..	1	90216-
11		714-07-19320	• • Seal Ring, (Kit : K01, K02, K04, K05) ..	1	90216-
12		419-15-12640	• • Bearing	2	90216-
13		714-07-46240	• • Plate	3	90216-
14		714-23-19410	• • Bearing, Needle	2	90216-
15		714-07-46111	• • Spacer	1	90216-
16		714-07-42621	• • Piston	1	90216-
17		714-07-49470	• • Bearing	1	90216-
18		04064-05520	• • Ring, Snap	1	90216-
19		714-07-42611	• • Piston	1	90216-
20		714-08-19710	• • Disc	12	90216-
21		714-08-19730	• • Plate, Separate	13	90216-
22		714-08-12911	• • Wave Spring	12	90216-
23		714-08-12610	• • Plate	1	90216-
24		714-08-19510	• • Ring, Snap	1	90216-
25		714-07-49210	• • Seal Ring, (Kit : K01, K02, K04, K05) ..	1	90216-
26		714-07-49220	• • Seal Ring, (Kit : K01, K02, K04, K05) ..	1	90216-
27		04064-05520	• • Ring, Snap	1	90216-
28		562-15-29310	• • Bearing	1	90216-
29		134-13-31580	• • Spacer	1	90216-

FIG. F4300-004003 Torque Converter and Transmission (Reverse and 2nd Housing)

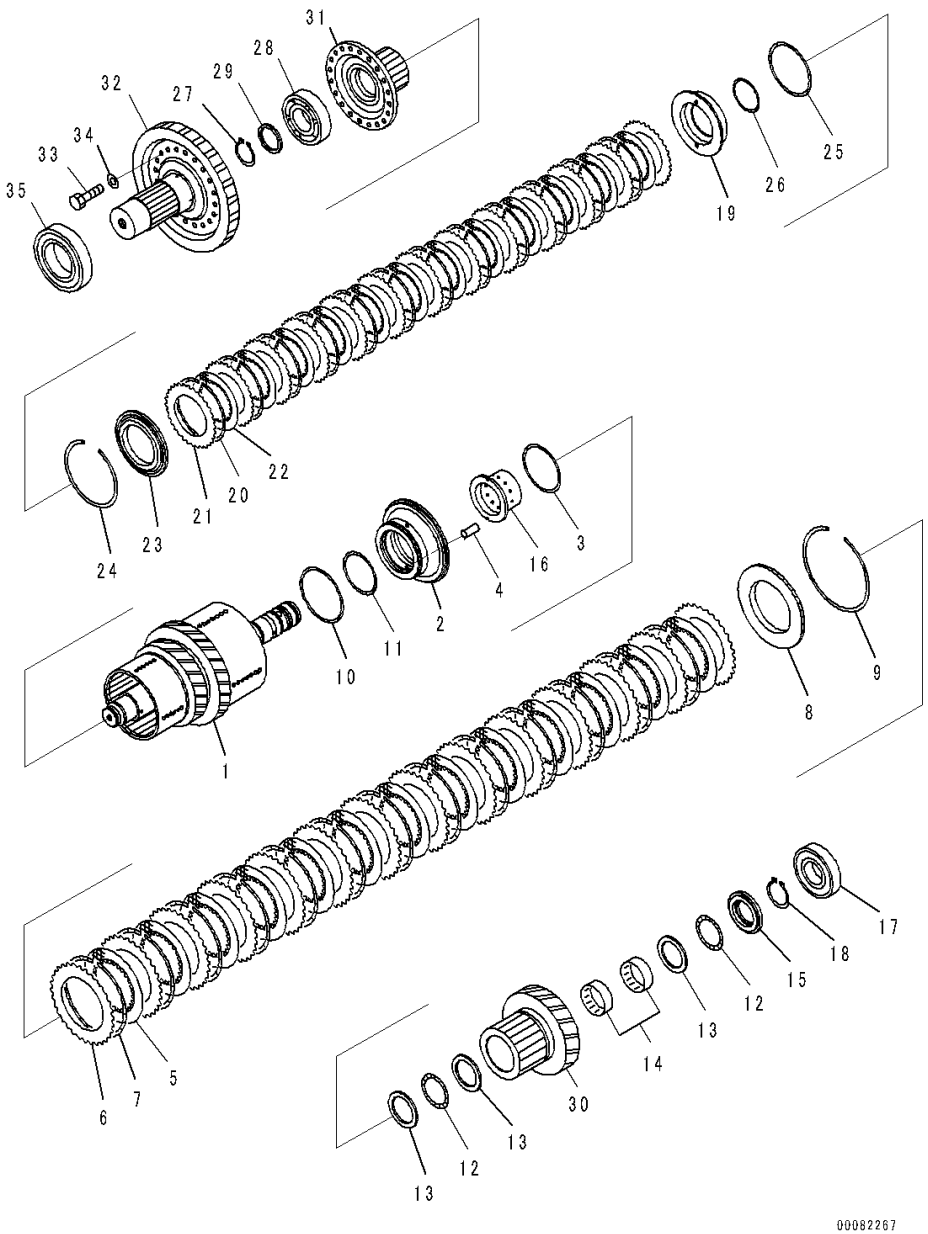

Index	Code	Part Number	Description	Qty	Serial Number
30		714-07-42411	• • Gear, Front	1	90216-
31		714-07-42431	• • Hub	1	90216-
32		714-07-43342	• • Shaft	1	90216-
33		01010-81035	• • Bolt	20	90216-
34		01643-31032	• • Washer	20	90216-
35		714-07-49620	• • Bearing	1	90216-

FIG. F4300-004004 Torque Converter and Transmission (3rd and 4th Housing)

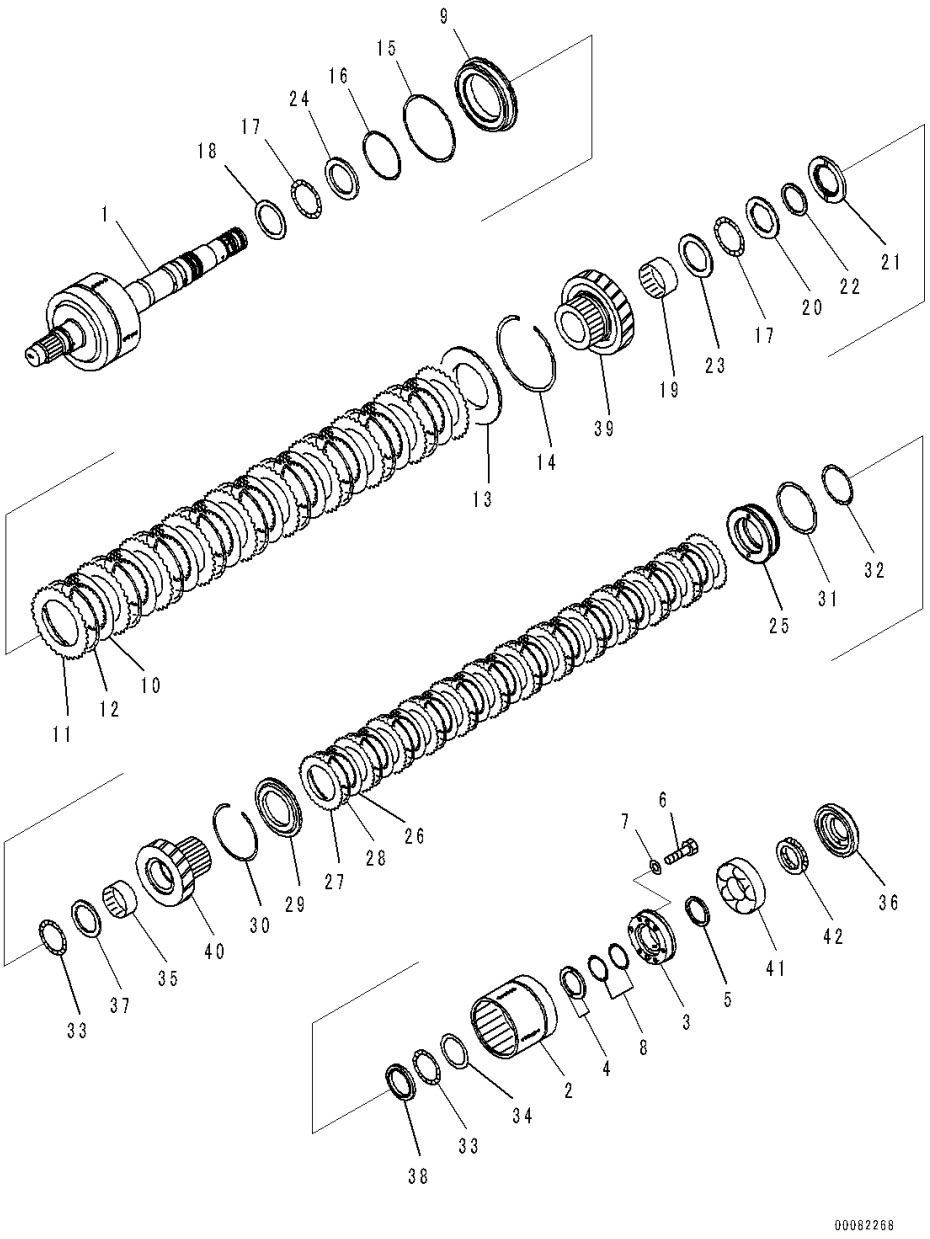

Index	Code	Part Number	Description	Qty	Serial Number
		Note: This list covers following specifications.			
		With Lockup Type			
		Without Lockup Type			
		714-07-40011	Transmission Assembly	1	90784-
			With Lockup Type		
		714-07-40001	Transmission Assembly	1	90784-
			Without Lockup Type		
		714-07-42030	• Clutch Assembly	1	90216-
1		714-07-42131	• • Shaft and Cylinder Assembly	1	90216-
	C1		• • • Shaft	1	90216-
	C1		• • • Orifice	1	90216-
	C1		• • • Plug	2	90216-
	C1		• • • Housing	1	90216-
	C1		• • • Screw, Set, D=3mm	1	90216-
2		714-07-42591	• • Housing	1	90216-
3		714-07-47721	• • Cover	1	90216-
4		22W-15-16241	• • Collar	2	90216-
5		134-13-31580	• • Spacer	1	90216-
6		01010-80840	• • Bolt	6	90216-
7		01643-30823	• • Washer	6	90216-
8		714-12-39210	• • Seal Ring, (Kit : K01, K02, K04, K05) ..	2	90216-
9		714-16-12660	• • Piston	1	90216-
10		714-12-19711	• • Disc	9	90216-
11		714-16-19730	• • Plate	10	90216-
12		56D-15-12710	• • Spring, Wave	9	90216-
13		714-12-12610	• • Plate, End	1	90216-
14		419-15-12140	• • Ring, Snap	1	90216-
15		714-16-19230	• • Seal Ring, (Kit : K01, K02, K04, K05) ..	1	90216-
16		714-16-19210	• • Seal Ring, (Kit : K01, K02, K04, K05) ..	1	90216-
17		419-15-12670	• • Bearing	2	90216-
18		419-15-12680	• • Washer	1	90216-
19		714-07-49460	• • Bearing	1	90216-
20		714-07-46151	• • Spacer	1	90216-
21		714-07-46161	• • Spacer	1	90216-
22		714-07-46171	• • Spacer	1	90216-
23		714-07-46250	• • Plate	1	90216-
24		714-07-46270	• • Plate	1	90216-
25		714-07-42631	• • Piston	1	90216-
26		714-07-49741	• • Clutch	12	90216-
27		714-07-49751	• • Plate	13	90216-

FIG. F4300-004004 Torque Converter and Transmission (3rd and 4th Housing)

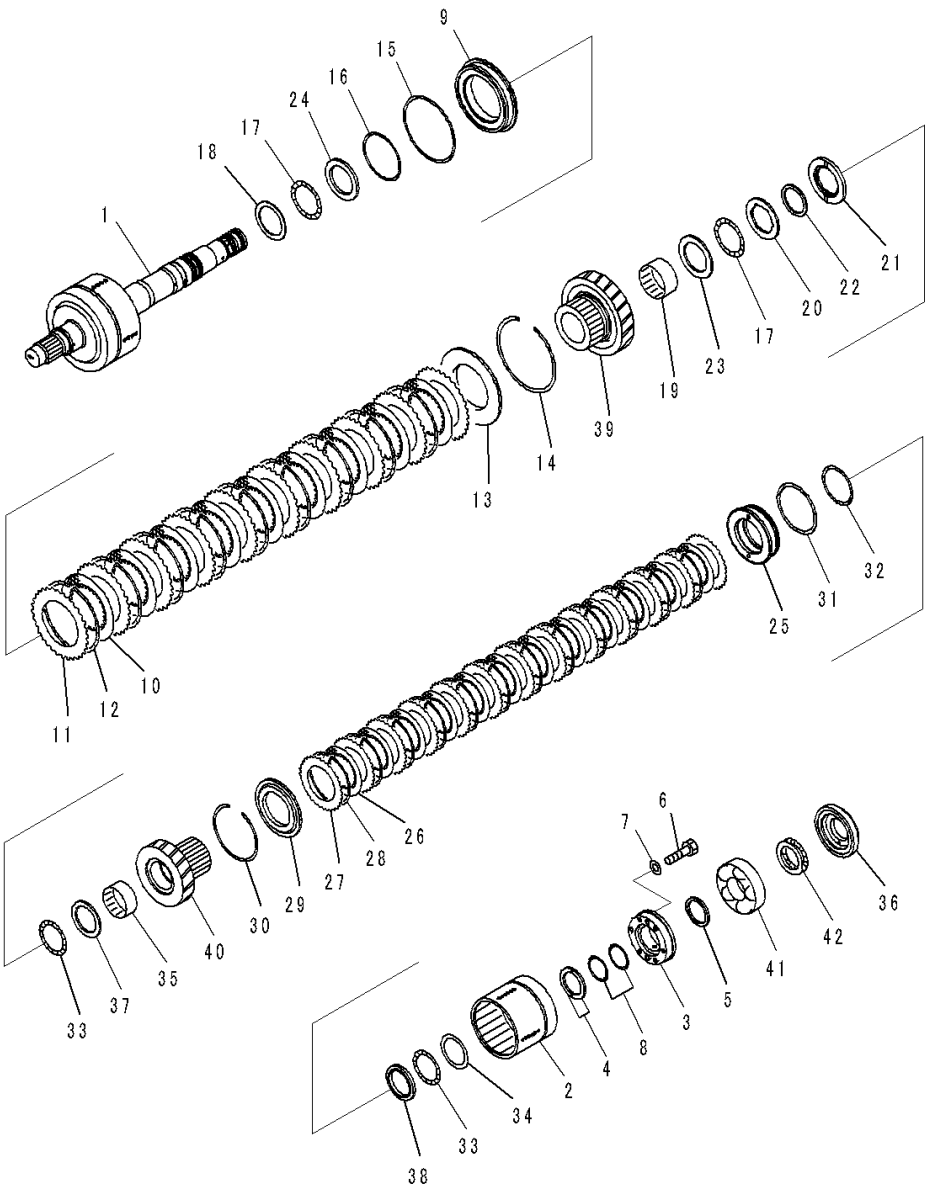

Index	Code	Part Number	Description	Qty	Serial Number
28		714-10-12811	• • Spring	12	90216-
29		714-07-48281	• • Plate	1	90216-
30		714-01-11380	• • Ring, Snap	1	90216-
31		714-10-19220	• • Seal Ring, (Kit : K01, K02, K04, K05)	1	90216-
32		714-08-19210	• • Seal Ring, (Kit : K01, K02, K04, K05)	1	90216-
33		419-15-12640	• • Bearing	2	90216-
34		419-15-12650	• • Washer, Thrust	1	90216-
35		714-23-19420	• • Bearing, Needle	1	90216-
36		714-07-46180	• • Spacer	1	90216-
37		714-07-46240	• • Plate	1	90216-
38		714-07-46260	• • Plate	1	90216-
39		714-07-42441	• • Gear, 3rd	1	90216-
40		714-07-42451	• • Gear, 4th	1	90216-
41		714-07-49470	• • Bearing	1	90216-
42		714-07-49510	• • Bearing	1	90216-

FIG. F4300-004005 Torque Converter and Transmission (Transmission Case)

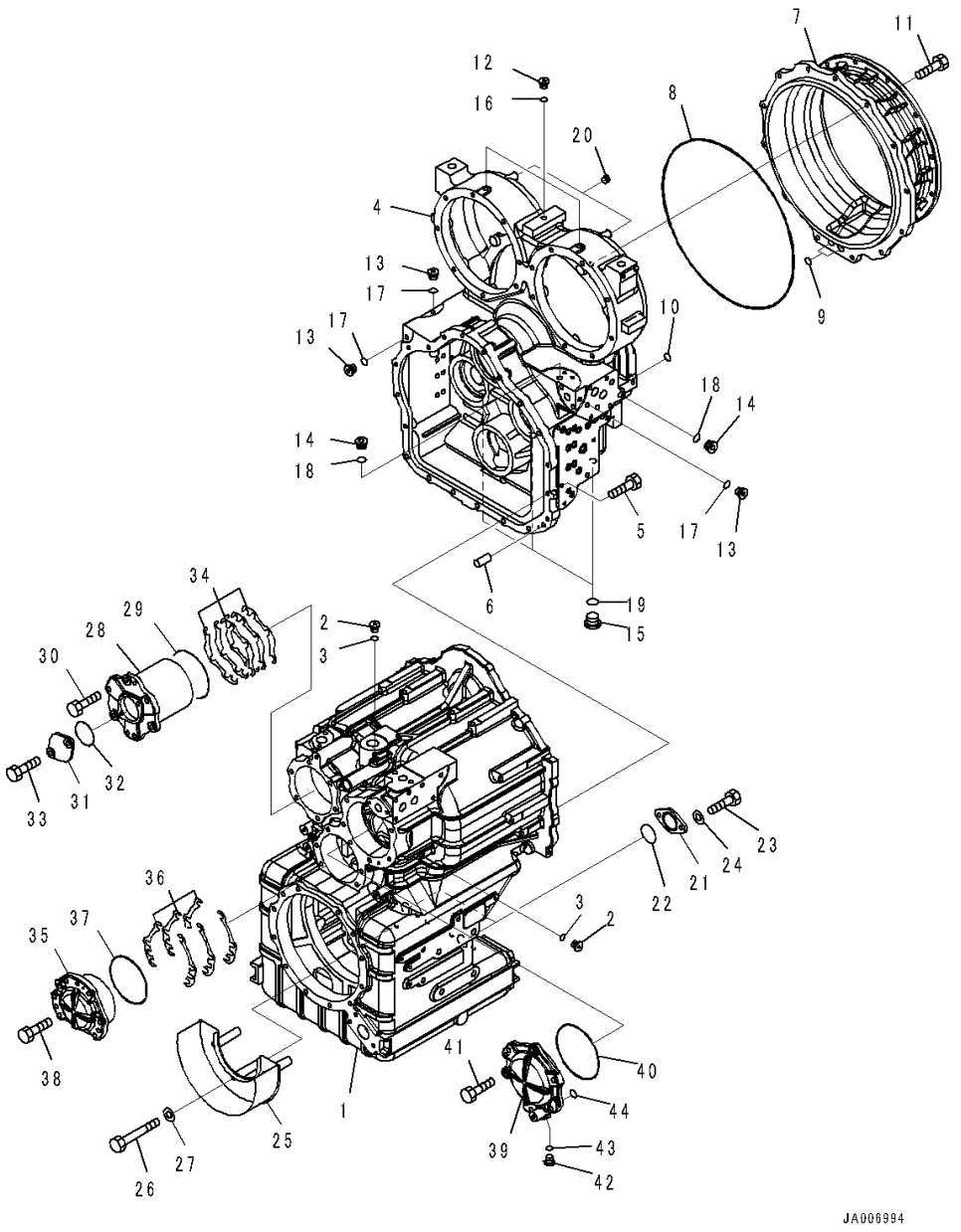

Index	Code	Part Number	Description	Qty	Serial Number
		Note: This list covers following specifications.			
		With Lockup Type			
		Without Lockup Type			
		714-07-40011	Transmission Assembly ..... With Lockup Type	1	90784-
		714-07-40001	Transmission Assembly ..... Without Lockup Type	1	90784-
1		714-07-48113	• Case, Front	1	90784-
2		723-11-18190	• Plug	2	90216-
3		07002-61023	• O-ring, (Kit : K01, K02, K04, K05)	2	90216-
4		714-07-48123	• Case, Rear	1	90216-
5		01010-81240	• Bolt	20	90216-
6		04020-01228	• Pin, Dowel	2	90216-
7		714-07-48131	• Housing	1	90216-
8		07000-75475	• O-ring, (Kit : K01, K02, K04, K05)	1	90216-
9		07000-73028	• O-ring, (Kit : K01, K02, K04, K05)	2	90216-
10		07000-73022	• O-ring, (Kit : K01, K02, K04, K05)	1	90216-
11		01010-81240	• Bolt	13	90216-
12		723-11-18190	• Plug	3	90216-
13		714-24-25190	• Plug	3	90216-
14		723-11-15110	• Plug	2	90216-
15		720-2M-11550	• Plug	3	90216-
16		07002-61023	• O-ring, (Kit : K01, K02, K04, K05)	3	90216-
17		07002-61423	• O-ring, (Kit : K01, K02, K04, K05)	3	90216-
18		07002-61623	• O-ring, (Kit : K01, K02, K04, K05)	2	90216-
19		07002-62034	• O-ring, (Kit : K01, K02, K04, K05)	3	90216-
20		714-12-32960	• Plug	2	90216-
21		561-33-71860	• Plate	2	90216-
22		07000-73048	• O-ring, (Kit : K01, K02, K04, K05)	2	90216-
23		01010-81230	• Bolt	4	90216-
24		01643-31232	• Washer	4	90216-
25		714-07-44911	• Cover, Gear	1	90216-
26		01011-81215	• Bolt	3	90216-
27		01643-31232	• Washer	3	90216-
28		714-07-47210	• Cage	1	90216-
29		07000-75130	• O-ring, (Kit : K01, K02, K04, K05)	1	90216-
30		01010-81240	• Bolt	6	90216-
31		714-13-11350	• Cover	1	90216-
32		07000-72065	• O-ring, (Kit : K01, K02, K04, K05)	1	90216-
33		01010-81225	• Bolt	2	90216-

FIG. F4300-004005 Torque Converter and Transmission (Transmission Case)

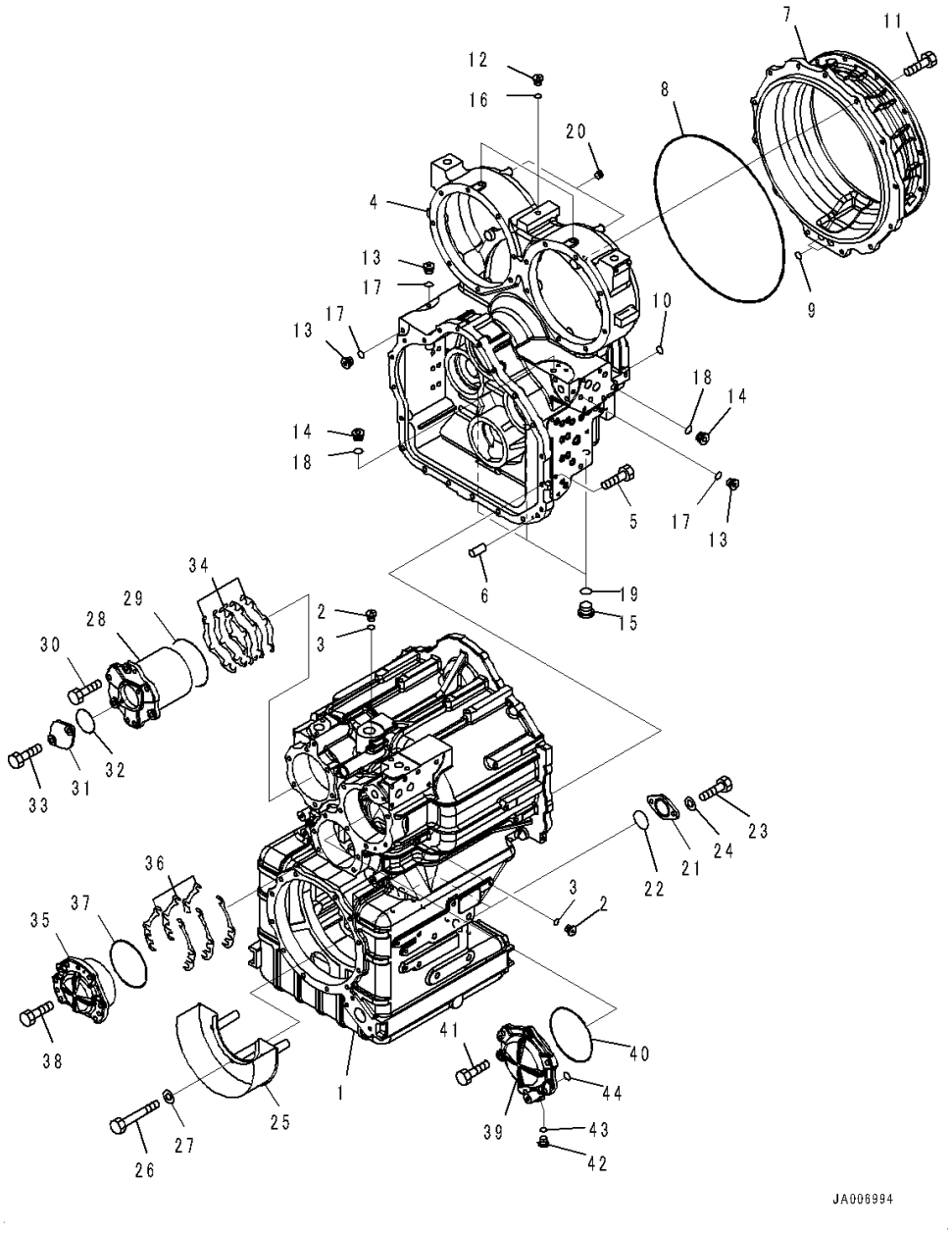

Index	Code	Part Number	Description	Qty	Serial Number
34		714-07-00310	• Shim Assembly, (Kit : K01, K02, K04, K05)	1	90216-
		714-07-44310	• • Shim, T=0.15mm	6	90216-
		714-07-44320	• • Shim, T=0.2mm	6	90216-
		714-07-44330	• • Shim, T=0.5mm	6	90216-
35		714-07-47231	• Cage	1	90216-
36		714-07-00320	• Shim Assembly, (Kit : K01, K02, K04, K05)	1	90216-
		714-07-44410	• • Shim, T=0.15mm	6	90216-
		714-07-44420	• • Shim, T=0.2mm	6	90216-
		714-07-44430	• • Shim, T=0.5mm	6	90216-
37		07000-75130	• O-ring, (Kit : K01, K02, K04, K05)	1	90216-
38		01010-81240	• Bolt	6	90216-
39		714-07-47220	• Cage	1	90216-
40		07000-75150	• O-ring, (Kit : K01, K02, K04, K05)	1	90216-
41		01010-81240	• Bolt	6	90216-
42		723-11-18190	• Plug	1	90216-
43		07002-61023	• O-ring, (Kit : K01, K02, K04, K05)	1	90216-
44		07000-72015	• O-ring, (Kit : K01, K02, K04, K05)	1	90216-

FIG. F4300-004006 Torque Converter and Transmission (Relief Valve)

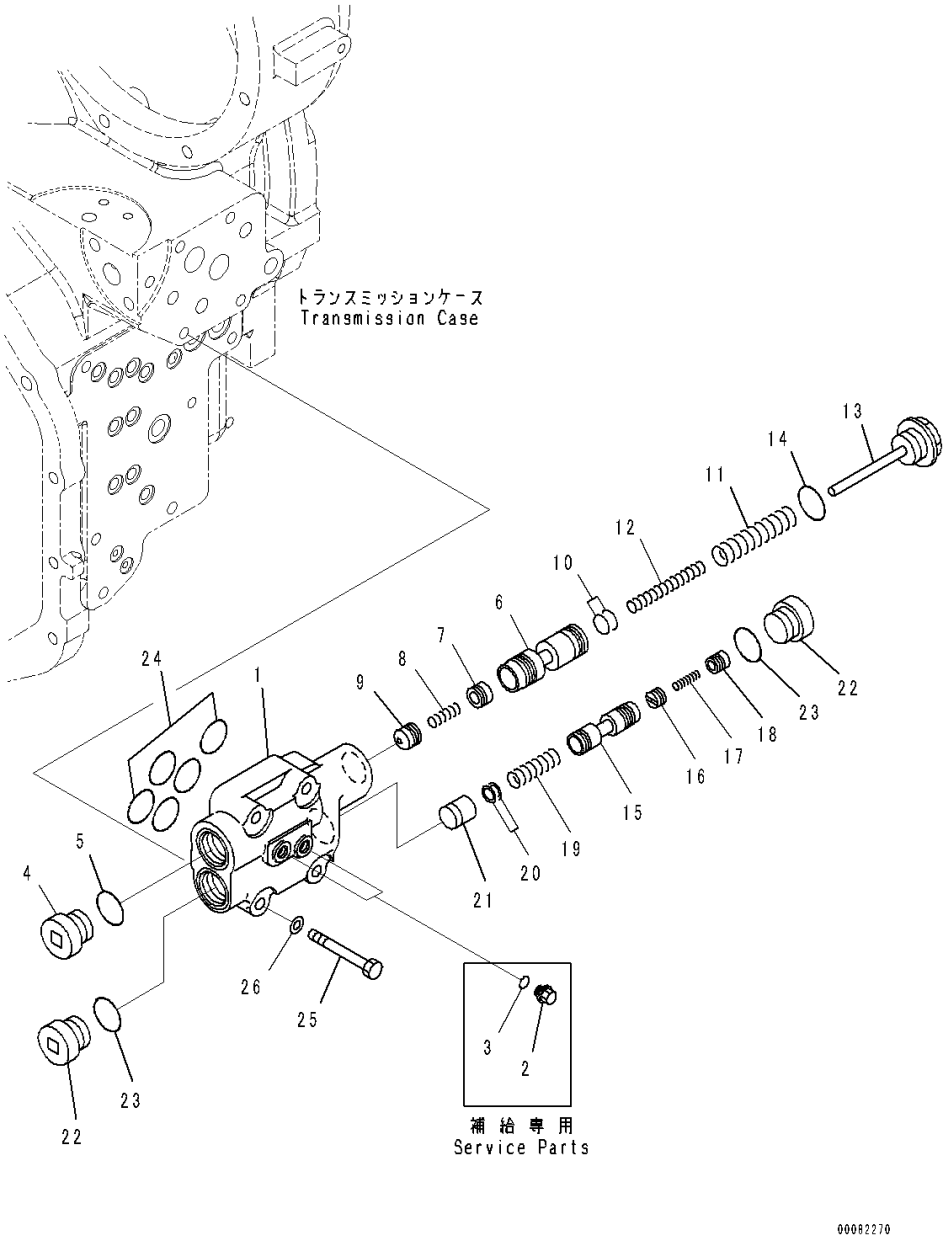

Index	Code	Part Number	Description	Qty	Serial Number
		Note: This list covers following specifications.			
		With Lockup Type			
		Without Lockup Type			
		714-07-40011	Transmission Assembly ..... With Lockup Type	1	90784-
		714-07-40001	Transmission Assembly ..... Without Lockup Type	1	90784-
		23C-15-66000	• Valve Assembly, Relief	1	90216-
1	C1		• • Valve Body	1	90216-
2		708-8E-16150	• • Plug	2	90216-
3		07002-61023	• • O-ring, (Kit : K03, K06)	2	90216-
4		14X-15-15850	• • Plug	1	90216-
5		07002-63034	• • O-ring, (Kit : K03, K06)	1	90216-
6		714-24-26230	• • Valve	1	90216-
7		426-15-15490	• • Valve	1	90216-
8		562-15-16110	• • Spring	1	90216-
9		426-15-15480	• • Valve	1	90216-
10		56B-15-16660	• • Shim, T=0.50mm	7	90216-
11		56B-15-16250	• • Spring	1	90216-
12		426-15-16261	• • Spring, L=108.0mm	1	90216-
13		426-15-15810	• • Plug	1	90216-
14		07002-63034	• • O-ring, (Kit : K03, K06)	1	90216-
15		12H-15-14130	• • Spool	1	90216-
16		104-15-25490	• • Valve	1	90216-
17		125-15-15290	• • Spring	1	90216-
18		104-15-25480	• • Valve	1	90216-
19		14X-15-16210	• • Spring	1	90216-
20		175-15-56470	• • Shim, T=0.50mm	2	90216-
21		12H-15-14140	• • Guide	1	90216-
22		14X-15-15850	• • Plug	2	90216-
23		07002-63034	• • O-ring, (Kit : K03, K06)	2	90216-
24		07000-73030	• O-ring, (Kit : K03, K06)	5	90216-
25		01010-81065	• Bolt	4	90216-
26		01643-31032	• Washer	4	90216-

FIG. F4300-004007 Torque Converter and Transmission (Control Valve) (1/7)

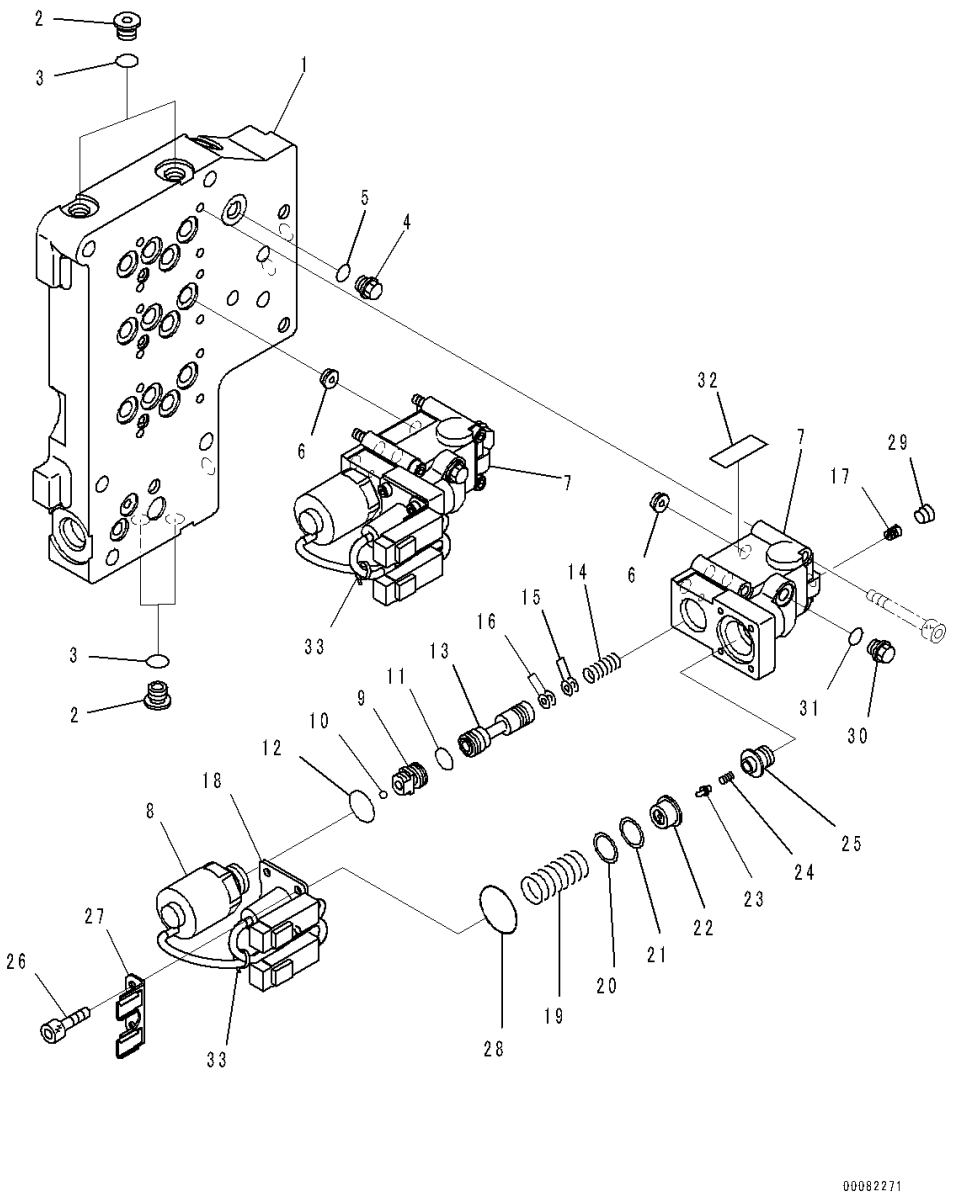

Index	Code	Part Number	Description	Qty	Serial Number
		Note: This list covers following specifications.			
		With Lockup Type			
		Without Lockup Type			
		714-07-40011	Transmission Assembly	1	90784-
			With Lockup Type		
		714-07-40001	Transmission Assembly	1	90784-
			Without Lockup Type		
		714-07-45100	• Valve Assembly	1	90216-
1		714-07-45112	• • Seat, Valve	1	90216-
2		708-7R-11220	• • Plug	8	90216-
3		07002-61223	• • O-ring, (Kit : K06)	8	90216-
4		708-8E-16150	• • Plug	1	90216-
5		07002-61023	• • O-ring, (Kit : K06)	1	90216-
6		714-07-35180	• • Orifice	2	90216-
		56D-15-35701	• • ECMV Assembly	2	91055-
7	C1		• • • Body	1	90216-
8	C1		• • • Solenoid Assembly	1	90901-
9	C1		• • • Valve	1	90216-
10	C1		• • • Ball	1	90216-
11	C1		• • • O-ring	1	90216-
12	C1		• • • O-ring	1	90216-
13	C1		• • • Spool	1	90216-
14	C1		• • • Spring, L=24.5mm	1	90216-
15	C1		• • • Shim, T=0.50mm	3	90216-
16	C1		• • • Shim, T=0.20mm	3	90216-
17	C1		• • • Plug	1	90216-
18	C1		• • • Switch Assembly	1	90216-
19	C1		• • • Spring	1	90216-
20	C1		• • • Shim, T=0.50mm	2	90216-
21	C1		• • • Shim, T=0.20mm	1	90216-
22	C1		• • • Seat, Spring	1	90216-
23	C1		• • • Pin	1	90216-
24	C1		• • • Spring, L=18.0mm	1	90216-
25	C1		• • • Sleeve	1	90216-
26		01252-90510	• • • Bolt, Hexagon Socket Head	4	90901-
27		714-23-15690	• • • Bracket	1	90216-
28	C1		• • • O-ring	1	90216-
29	C1		• • • Plug	1	90216-
30		708-8E-16150	• • • Plug	1	90216-
31		07002-61023	• • • O-ring, (Kit : K06)	1	90216-

FIG. F4300-004007 Torque Converter and Transmission (Control Valve) (1/7)

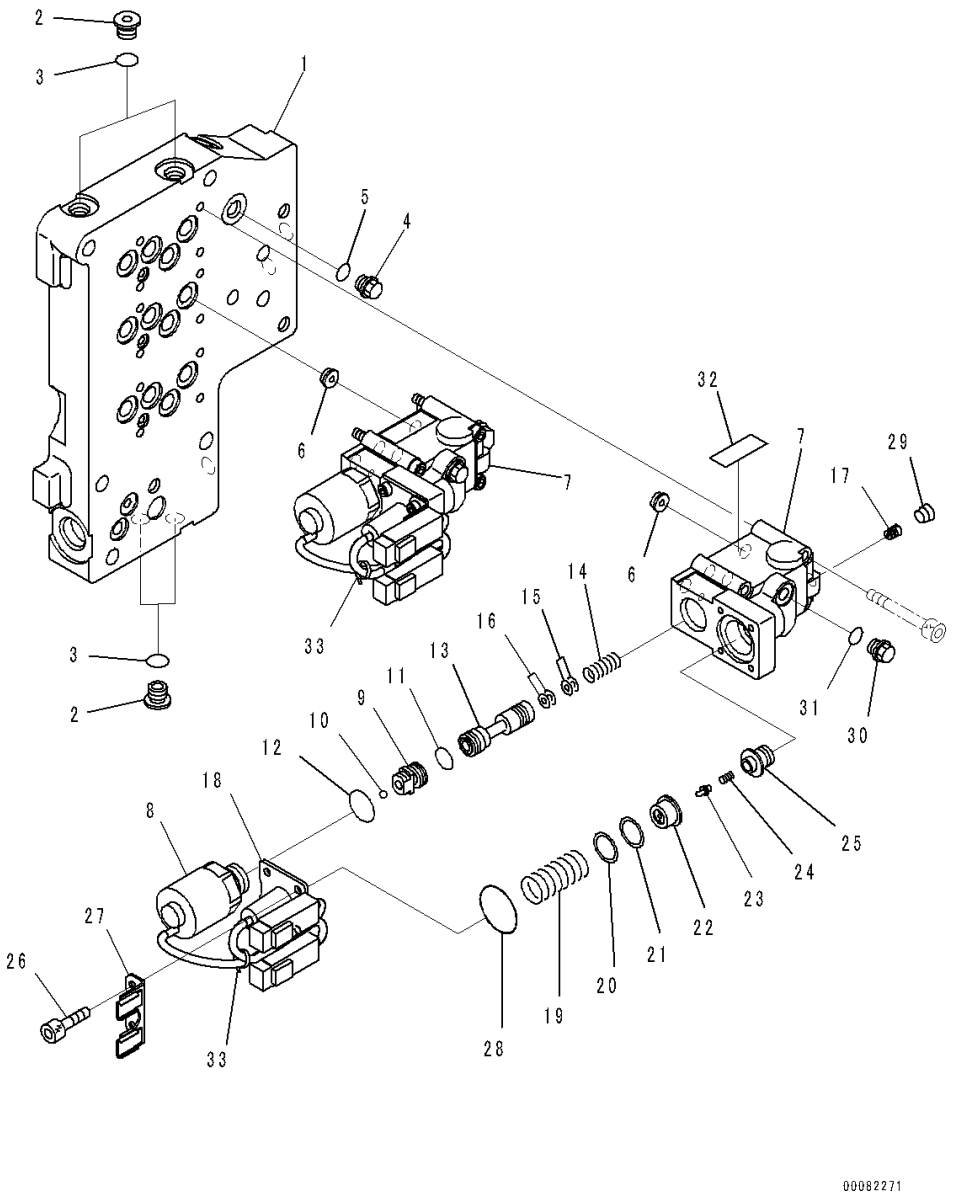

Index	Code	Part Number	Description	Qty	Serial Number
32	C2	700-11-31940	• • • Plate, Name (Limited Supply)	1	90216-
33	C1		• • • Band, White	1	90216-

FIG. F4300-004008 Torque Converter and Transmission (Control Valve) (2/7)

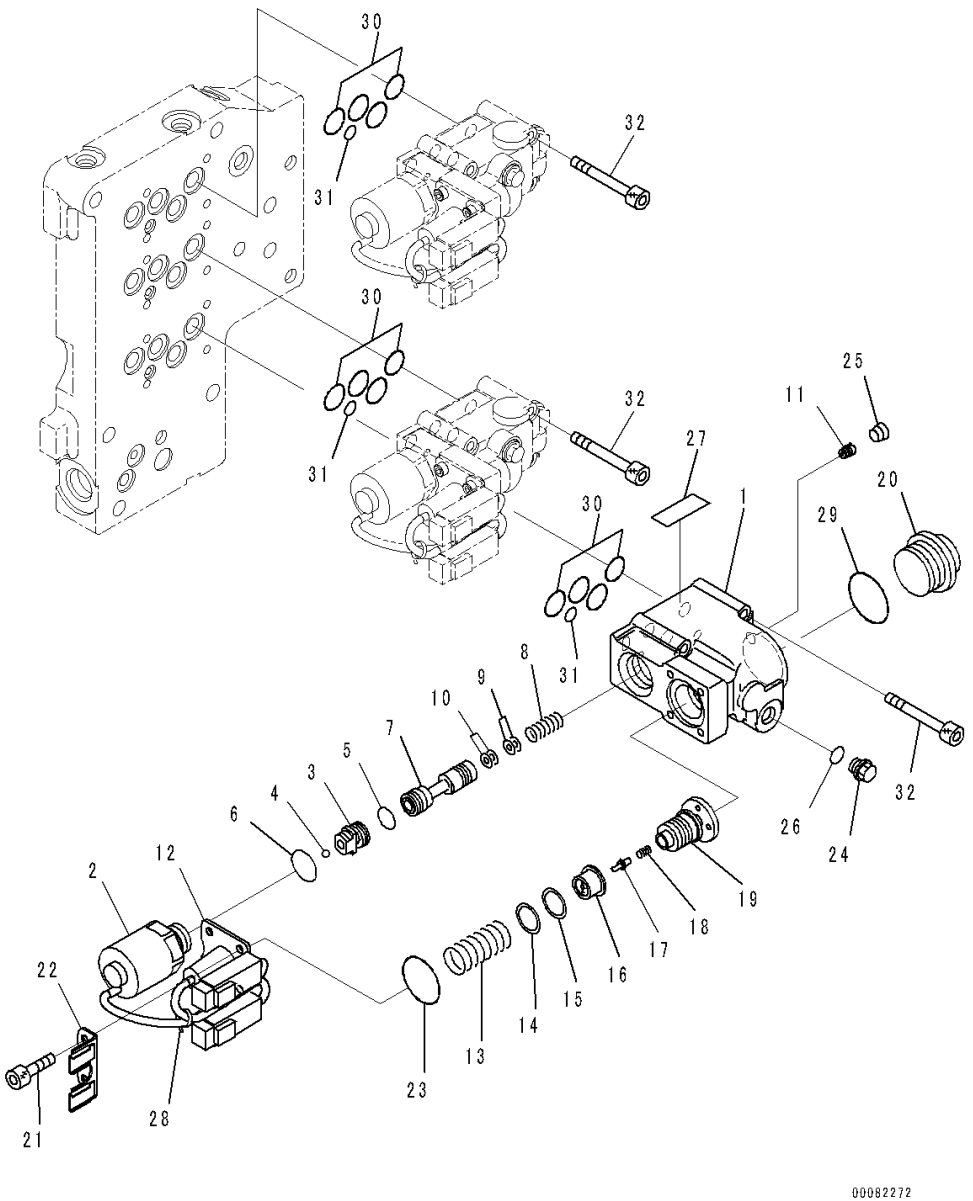

Index	Code	Part Number	Description	Qty	Serial Number
		Note: This list covers following specifications.			
		With Lockup Type			
		Without Lockup Type			
		714-07-40011	Transmission Assembly	1	90784-
			With Lockup Type		
		714-07-40001	Transmission Assembly	1	90784-
			Without Lockup Type		
		714-07-45100	• Valve Assembly	1	90216-
		23C-15-65300	• • ECMV Assembly	1	90901-
1	C1		• • • Valve Body	1	90216-
2	C1		• • • Solenoid Assembly	1	90901-
3	C1		• • • Valve	1	90216-
4	C1		• • • Ball	1	90216-
5	C1		• • • O-ring	1	90216-
6	C1		• • • O-ring	1	90216-
7	C1		• • • Spool	1	90216-
8	C1		• • • Spring, L=24.5mm	1	90216-
9	C1		• • • Shim, T=0.50mm	3	90216-
10	C1		• • • Shim, T=0.20mm	3	90216-
11	C1		• • • Plug	1	90216-
12	C1		• • • Switch Assembly	1	90216-
13	C1		• • • Spring, L=23.4mm	1	90216-
14	C1		• • • Shim, T=0.50mm	2	90216-
15	C1		• • • Shim, T=0.20mm	1	90216-
16	C1		• • • Seat, Spring	1	90216-
17	C1		• • • Pin	1	90216-
18	C1		• • • Spring, L=18.0mm	1	90216-
19	C1		• • • Spool	1	90216-
20	C1		• • • Plug	1	90216-
21		01252-90510	• • • Bolt, Hexagon Socket Head	4	90901-
22		714-23-15690	• • • Bracket	1	90216-
23	C1		• • • O-ring	1	90216-
24		708-8E-16150	• • • Plug	1	90216-
25	C1		• • • Plug	1	90216-
26		07002-61023	• • • O-ring, (Kit : K03, K06)	1	90216-
27	C2	700-11-31940	• • • Plate, Name (Limited Supply)	1	90216-
28	C1		• • • Band, White	1	90216-
29	C1		• • • O-ring	1	90216-
30		07000-72015	• • O-ring, (Kit : K03, K06)	12	90216-
31		07000-71007	• • O-ring, (Kit : K03, K06)	3	90216-

FIG. F4300-004008 Torque Converter and Transmission (Control Valve) (2/7)

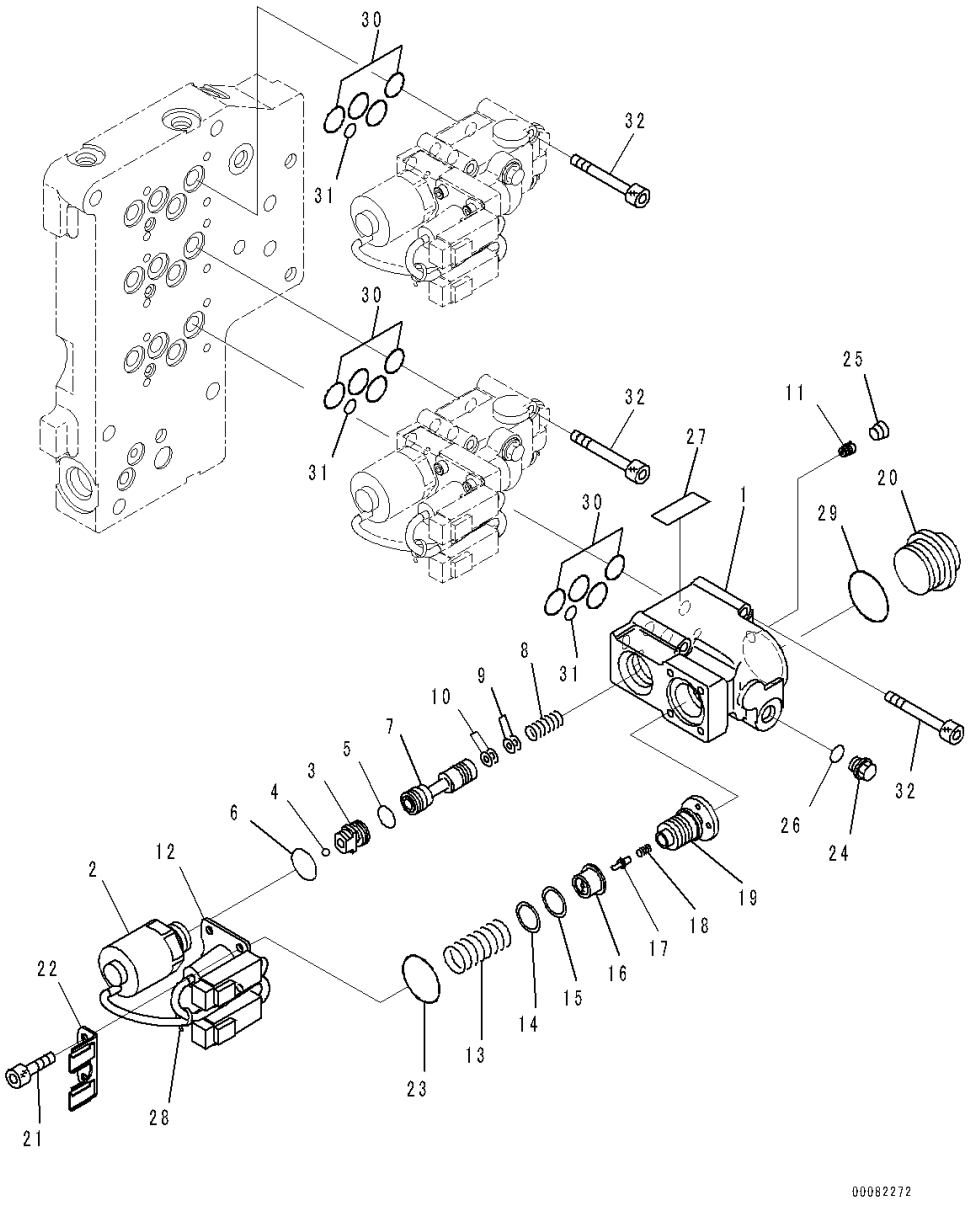

Index	Code	Part Number	Description	Qty	Serial Number
32		01252-70650	• • Bolt	12	90216-

FIG. F4300-004009 Torque Converter and Transmission (Control Valve) (3/7)

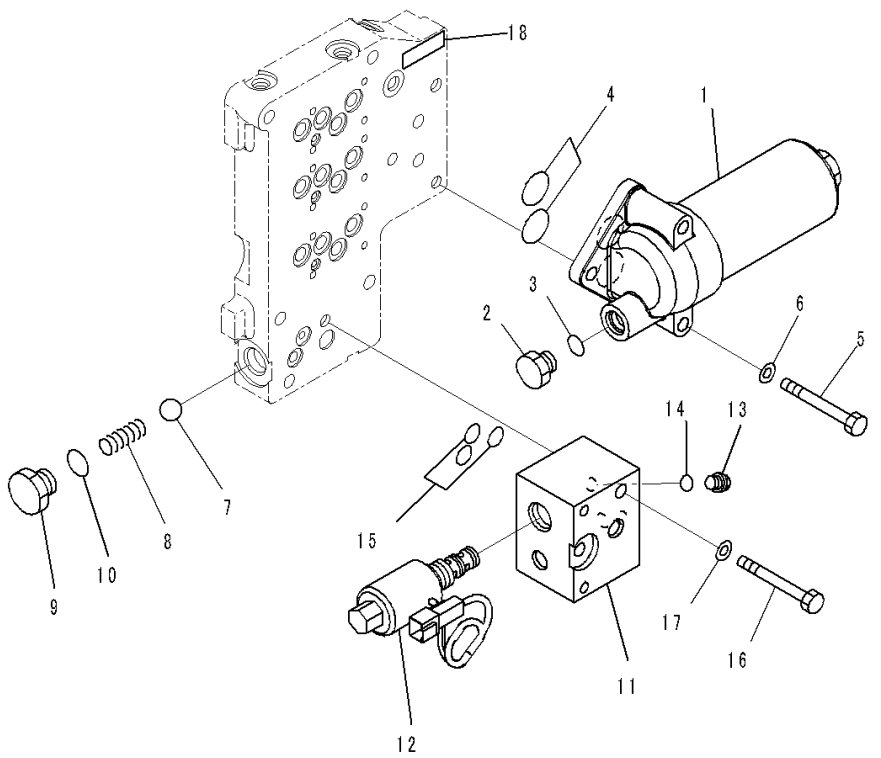

Index	Code	Part Number	Description	Qty	Serial Number
		Note: This list covers following specifications.			
		With Lockup Type			
		Without Lockup Type			
		714-07-40011	Transmission Assembly ..... With Lockup Type	1	90784-
		714-07-40001	Transmission Assembly ..... Without Lockup Type	1	90784-
		714-07-45100	• Valve Assembly	1	90216-
1		569-15-51721	• • Filter Assembly	1	90216-
		569-15-51732	• • • Element Assembly	1	90216-
		07000-A2060	• • • O-ring	1	90216-
2		07040-11812	• • Plug	1	90216-
3		07002-61823	• • O-ring, (Kit : K03, K06)	1	90216-
4		07000-73022	• • O-ring, (Kit : K03, K06)	2	90216-
5		01010-81080	• • Bolt	1	90216-
6		01643-31032	• • Washer	1	90216-
7		04260-01270	• • Ball	1	90216-
8		234-15-15120	• • Spring	1	90216-
9		714-10-16890	• • Plug	1	90216-
10		07002-62034	• • O-ring, (Kit : K03, K06)	1	90216-
11		714-07-45240	• • Block	1	90216-
12		714-12-25220	• • Valve, Solenoid	1	90216-
13		708-8E-16150	• • Plug	3	90216-
14		07002-61023	• • O-ring, (Kit : K03, K06)	3	90216-
15		07000-72012	• • O-ring, (Kit : K03, K06)	3	90216-
16		01010-81080	• • Bolt	1	90216-
17		01643-31032	• • Washer	1	90216-
18	C2	700-11-31980	• • Plate, Name (Limited Supply)	1	90216-

FIG. F4300-004010 Torque Converter and Transmission (Control Valve) (4/7)

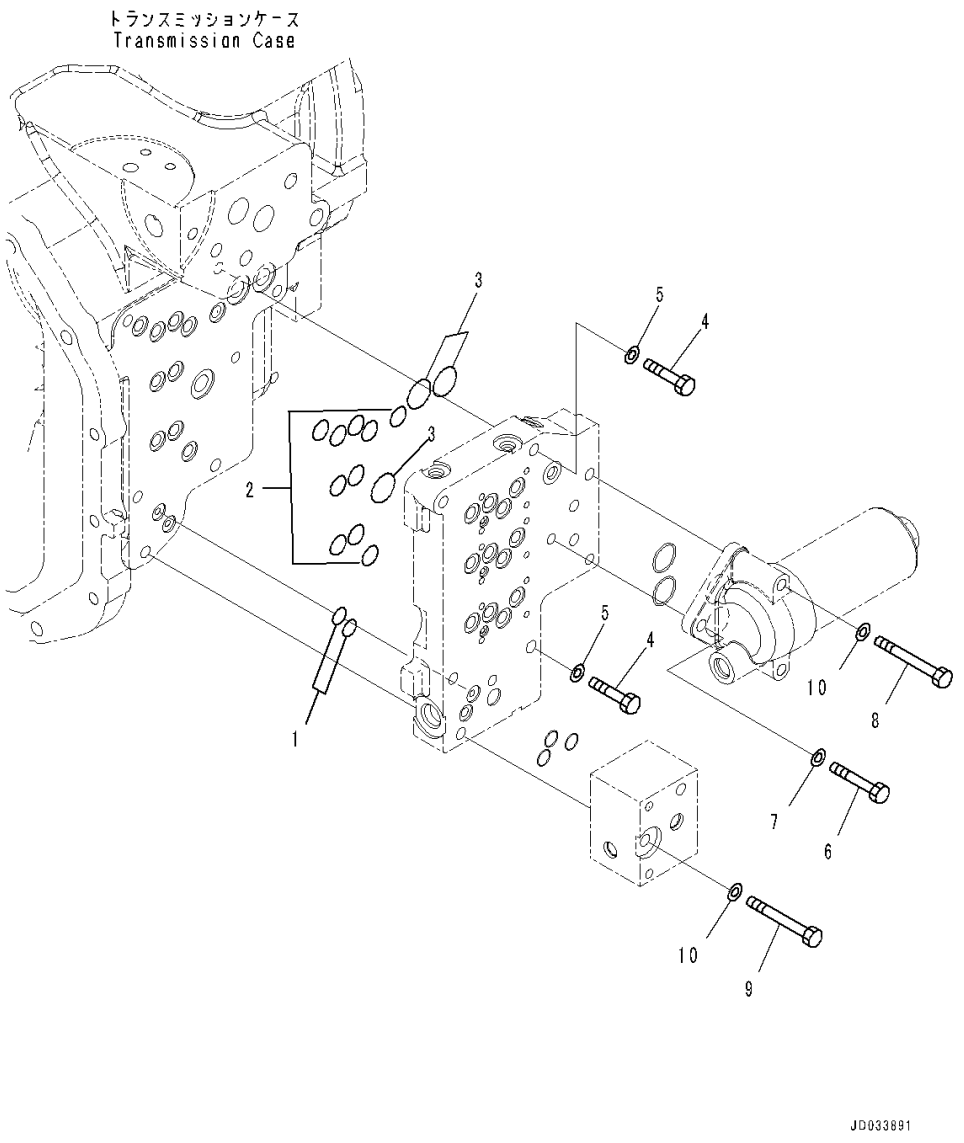

Index	Code	Part Number	Description	Qty	Serial Number
		Note: This list covers following specifications.			
		With Lockup Type			
		Without Lockup Type			
		714-07-40011	Transmission Assembly ..... With Lockup Type	1	90784-
		714-07-40001	Transmission Assembly ..... Without Lockup Type	1	90784-
1		07000-72012	• O-ring, (Kit : K03, K06)	2	90216-
2		07000-72015	• O-ring, (Kit : K03, K06)	10	90216-
3		07000-73022	• O-ring, (Kit : K03, K06)	3	90216-
4		01010-81055	• Bolt	4	90216-
5		01643-31032	• Washer	4	90216-
6		01010-81065	• Bolt	1	90216-
7		01643-31032	• Washer	1	90216-
8		01011-81020	• Bolt	1	90216-
9		01011-81010	• Bolt	1	90216-
10		01643-31032	• Washer	2	90216-

FIG. F4300-004011 Torque Converter and Transmission (Control Valve) (5/7)

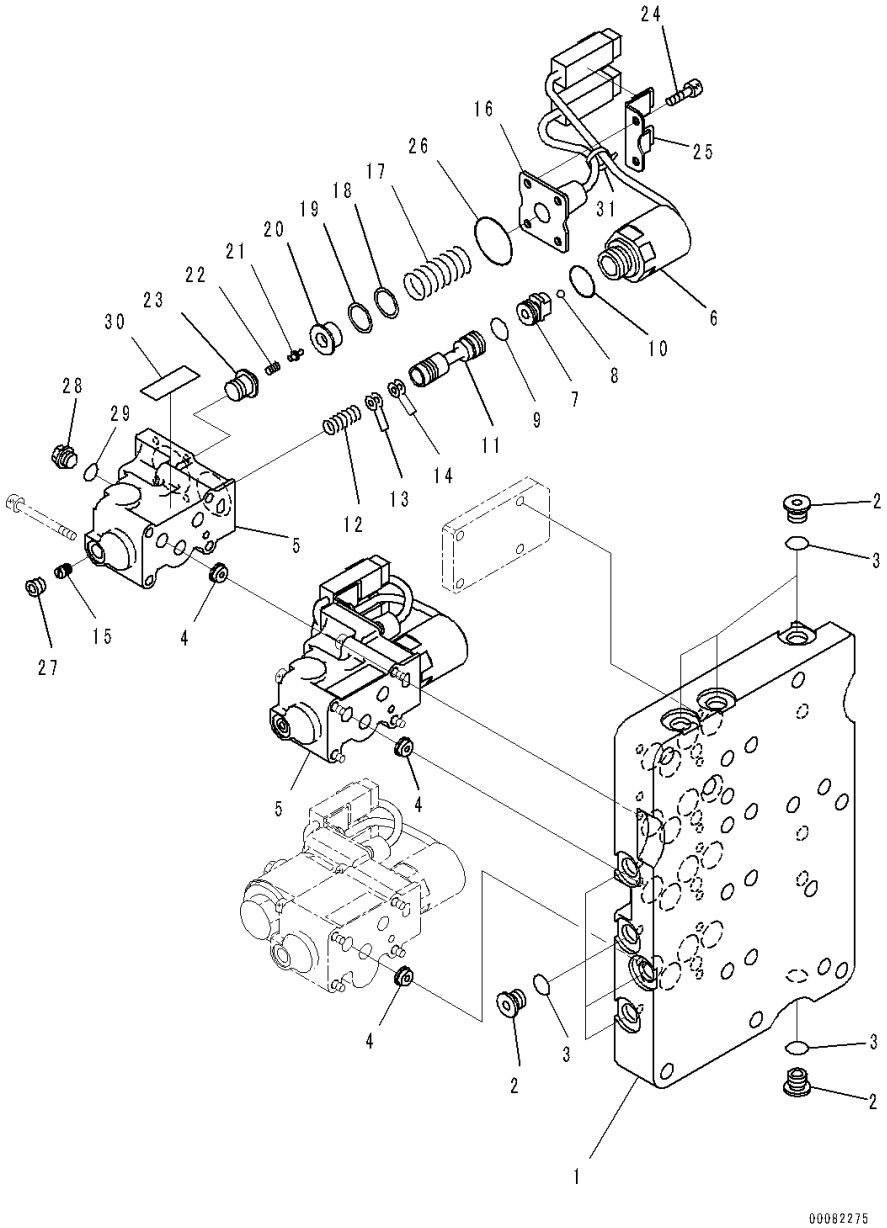

Index	Code	Part Number	Description	Qty	Serial Number
		Note: This list covers following specifications.			
		With Lockup Type			
		Without Lockup Type			
		714-07-40011	Transmission Assembly	1	90784-
			With Lockup Type		
		714-07-40001	Transmission Assembly	1	90784-
			Without Lockup Type		
		714-07-45300	• Valve Assembly	1	90216-
			With Lockup Type		
		714-07-45200	• Valve Assembly	1	90216-
			Without Lockup Type		
1		714-07-45121	• • Seat, Valve	1	90216-
2		708-7R-11220	• • Plug	8	90216-
3		07002-61223	• • O-ring, (Kit : K06)	8	90216-
4		714-07-35180	• • Orifice	3	90216-
		56D-15-35701	• • ECMV Assembly	2	91049-
5	C1		• • • Body	1	90216-
6	C1		• • • Solenoid Assembly	1	90901-
7	C1		• • • Valve	1	90216-
8	C1		• • • Ball	1	90216-
9	C1		• • • O-ring	1	90216-
10	C1		• • • O-ring	1	90216-
11	C1		• • • Spool	1	90216-
12	C1		• • • Spring, L=24.5mm	1	90216-
13	C1		• • • Shim, T=0.50mm	3	90216-
14	C1		• • • Shim, T=0.20mm	3	90216-
15	C1		• • • Plug	1	90216-
16	C1		• • • Switch Assembly	1	90216-
17	C1		• • • Spring	1	90216-
18	C1		• • • Shim, T=0.50mm	2	90216-
19	C1		• • • Shim, T=0.20mm	1	90216-
20	C1		• • • Seat, Spring	1	90216-
21	C1		• • • Pin	1	90216-
22	C1		• • • Spring, L=18.0mm	1	90216-
23	C1		• • • Sleeve	1	90216-
24		01252-90510	• • • Bolt, Hexagon Socket Head	4	90901-
25		714-23-15690	• • • Bracket	1	90216-
26	C1		• • • O-ring	1	90216-
27	C1		• • • Plug	1	90216-
28		708-8E-16150	• • • Plug	1	90216-

FIG. F4300-004011 Torque Converter and Transmission (Control Valve) (5/7)

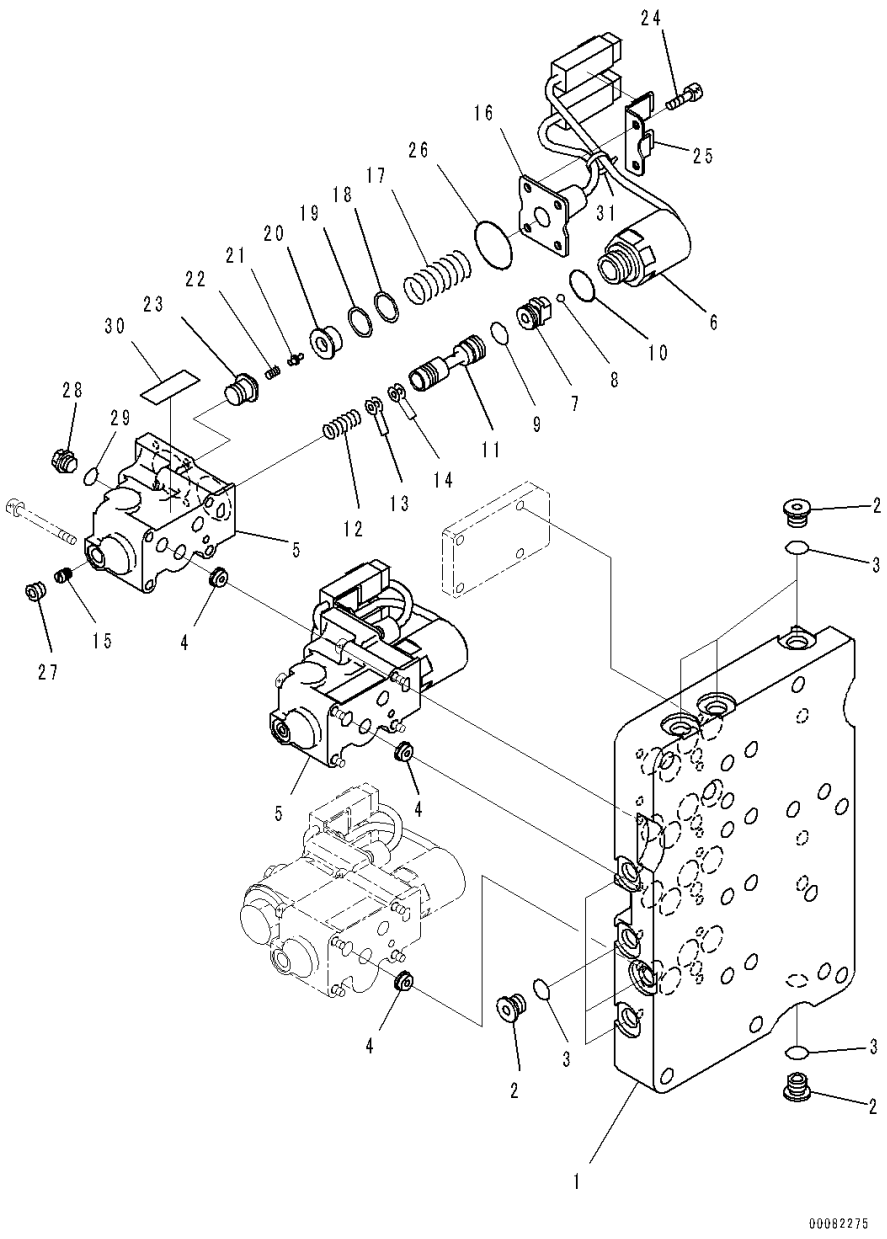

Index	Code	Part Number	Description	Qty	Serial Number
29		07002-61023	• • • O-ring, (Kit : K06)	1	90216-
30	C2	700-11-31940	• • • Plate, Name (Limited Supply)	1	90216-
31	C1		• • • Band, White	1	90216-

FIG. F4300-004012 Torque Converter and Transmission (Control Valve) (6/7)

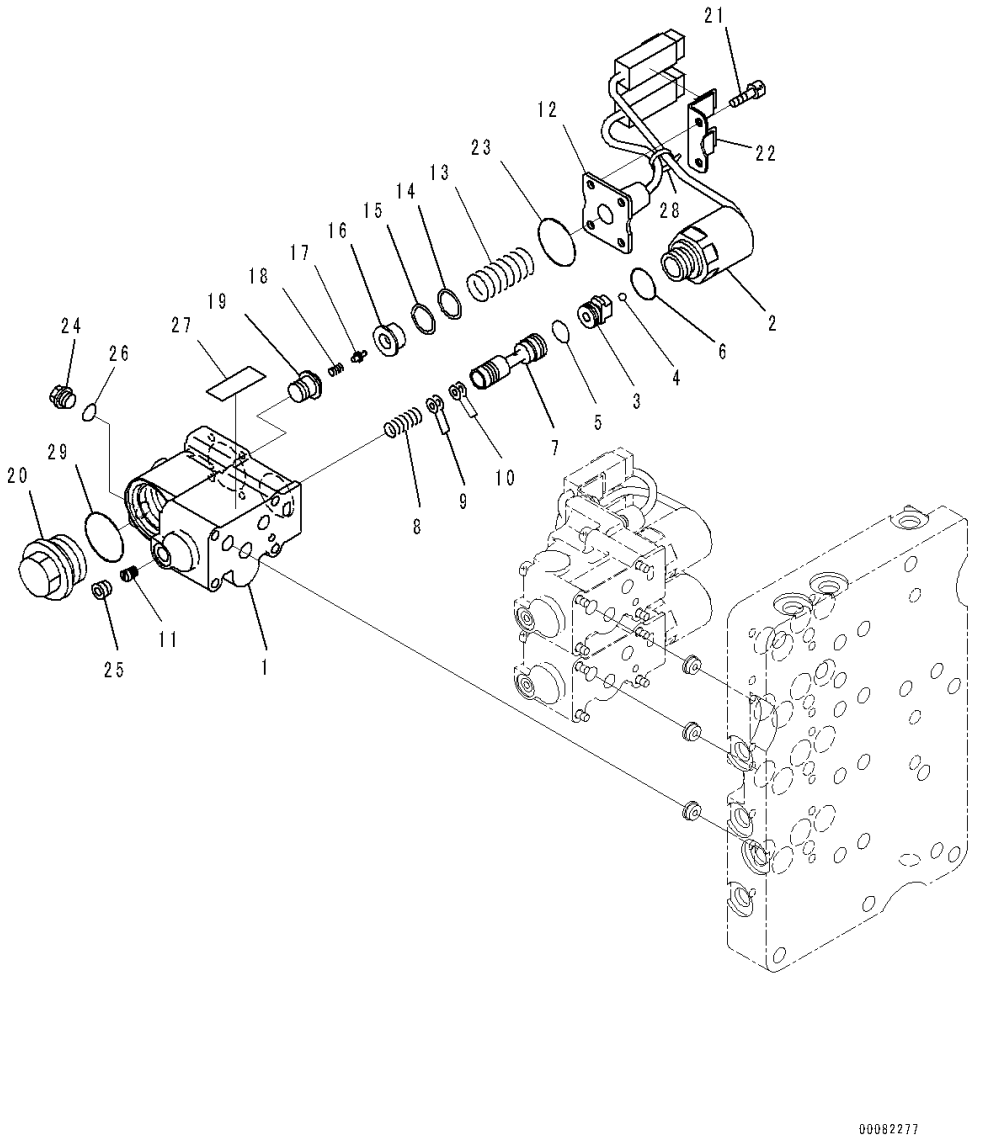

Index	Code	Part Number	Description	Qty	Serial Number
		Note: This list covers following specifications.			
		With Lockup Type			
		Without Lockup Type			
		714-07-40011	Transmission Assembly	1	90784-
			With Lockup Type		
		714-07-40001	Transmission Assembly	1	90784-
			Without Lockup Type		
		714-07-45300	• Valve Assembly	1	90216-
			With Lockup Type		
		714-07-45200	• Valve Assembly	1	90216-
			Without Lockup Type		
		23C-15-65300	• • ECMV Assembly	1	90901-
1	C1		• • • Valve Body	1	90216-
2	C1		• • • Solenoid Assembly	1	90901-
3	C1		• • • Valve	1	90216-
4	C1		• • • Ball	1	90216-
5	C1		• • • O-ring	1	90216-
6	C1		• • • O-ring	1	90216-
7	C1		• • • Spool	1	90216-
8	C1		• • • Spring, L=24.5mm	1	90216-
9	C1		• • • Shim, T=0.50mm	3	90216-
10	C1		• • • Shim, T=0.20mm	3	90216-
11	C1		• • • Plug	1	90216-
12	C1		• • • Switch Assembly	1	90216-
13	C1		• • • Spring, L=23.4mm	1	90216-
14	C1		• • • Shim, T=0.50mm	2	90216-
15	C1		• • • Shim, T=0.20mm	1	90216-
16	C1		• • • Seat, Spring	1	90216-
17	C1		• • • Pin	1	90216-
18	C1		• • • Spring, L=18.0mm	1	90216-
19	C1		• • • Spool	1	90216-
20	C1		• • • Plug	1	90216-
21		01252-90510	• • • Bolt, Hexagon Socket Head	4	90901-
22		714-23-15690	• • • Bracket	1	90216-
23	C1		• • • O-ring	1	90216-
24		708-8E-16150	• • • Plug	1	90216-
25	C1		• • • Plug	1	90216-
26		07002-61023	• • • O-ring, (Kit : K03, K06)	1	90216-
27	C2	700-11-31940	• • • Plate, Name (Limited Supply)	1	90216-
28	C1		• • • Band, White	1	90216-

FIG. F4300-004012 Torque Converter and Transmission (Control Valve) (6/7)

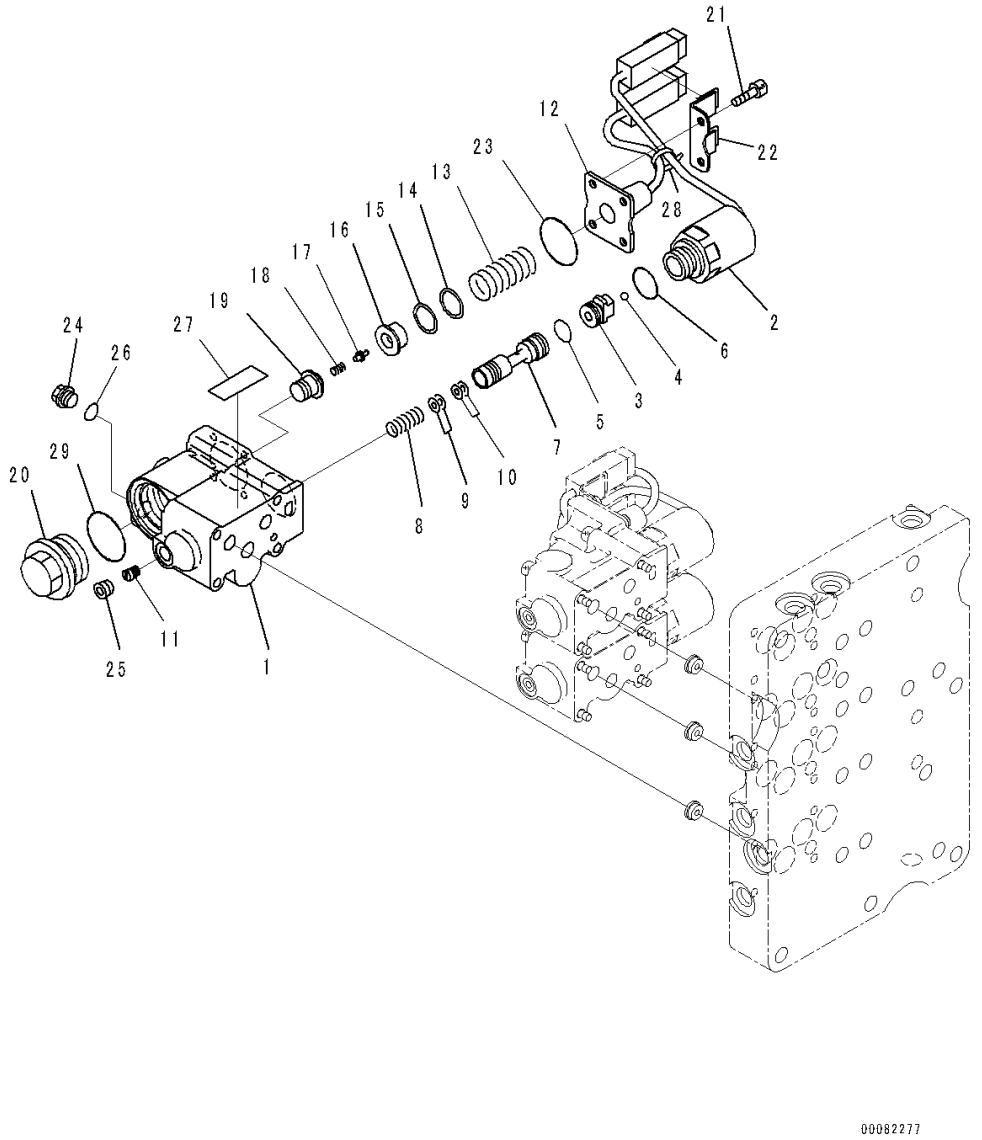

Index	Code	Part Number	Description	Qty	Serial Number
29	C1		• • • O-ring	1	90216-

FIG. F4300-004013 Torque Converter and Transmission (With Lockup Type) (Control Valve) (7/7)

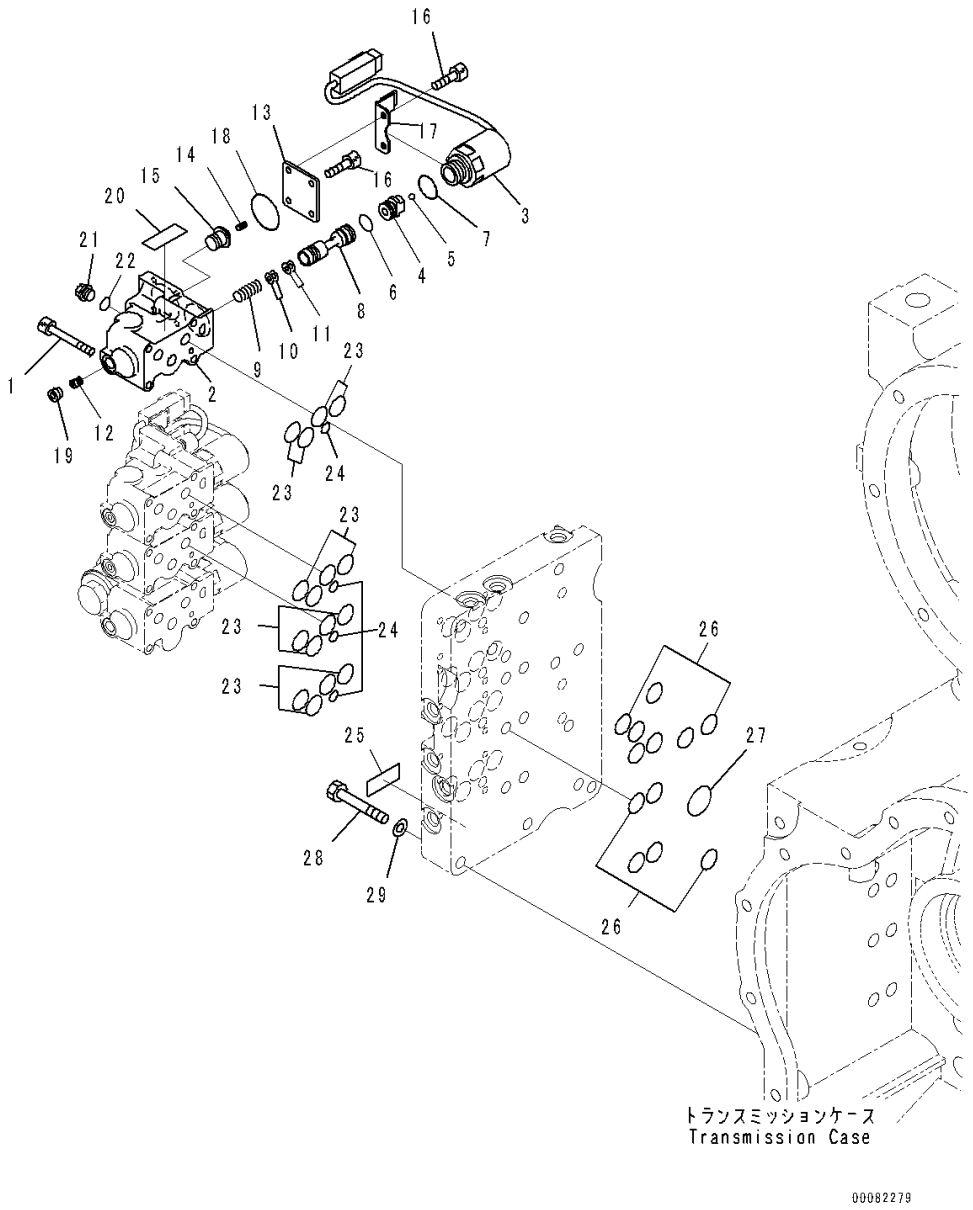

Index	Code	Part Number	Description	Qty	Serial Number
		714-07-40011	Transmission Assembly	1	90784-
		714-07-45300	• Valve Assembly	1	90216-
1		01252-70650	• • Bolt	16	90216-
		56D-15-35800	• • ECMV Assembly	1	90901-
2	C1		• • • Body	1	90216-
3	C1		• • • Solenoid Assembly	1	90901-
4	C1		• • • Valve	1	90216-
5	C1		• • • Ball	1	90216-
6	C1		• • • O-ring	1	90216-
7	C1		• • • O-ring	1	90216-
8	C1		• • • Spool	1	90216-
9	C1		• • • Spring, L=24.5mm	1	90216-
10	C1		• • • Shim, T=0.50mm	3	90216-
11	C1		• • • Shim, T=0.20mm	3	90216-
12	C1		• • • Plug	1	90216-
13	C1		• • • Plate	1	90216-
14	C1		• • • Seat, Spring	1	90216-
15	C1		• • • Sleeve	1	90216-
16		01252-90510	• • • Bolt, Hexagon Socket Head	4	90901-
17	C1		• • • Bracket	1	90216-
18	C1		• • • O-ring	1	90216-
19	C1		• • • Plug	1	90216-
20	C2	700-11-31940	• • • Plate, Name (Limited Supply)	1	90216-
21		708-8E-16150	• • • Plug	1	90216-
22		07002-61023	• • • O-ring, (Kit : K03)	1	90216-
23		07000-72015	• • O-ring, (Kit : K03)	16	90216-
24		07000-71007	• • O-ring, (Kit : K03)	4	90216-
25	C2	700-11-31980	• • Plate, Name (Limited Supply)	1	90216-
26		07000-72015	• O-ring, (Kit : K03)	12	90216-
27		07000-73022	• O-ring, (Kit : K03)	1	90216-
28		01010-81055	• Bolt	6	90216-
29		01643-31032	• Washer	6	90216-

FIG. F4300-004014 Torque Converter and Transmission (Piping)

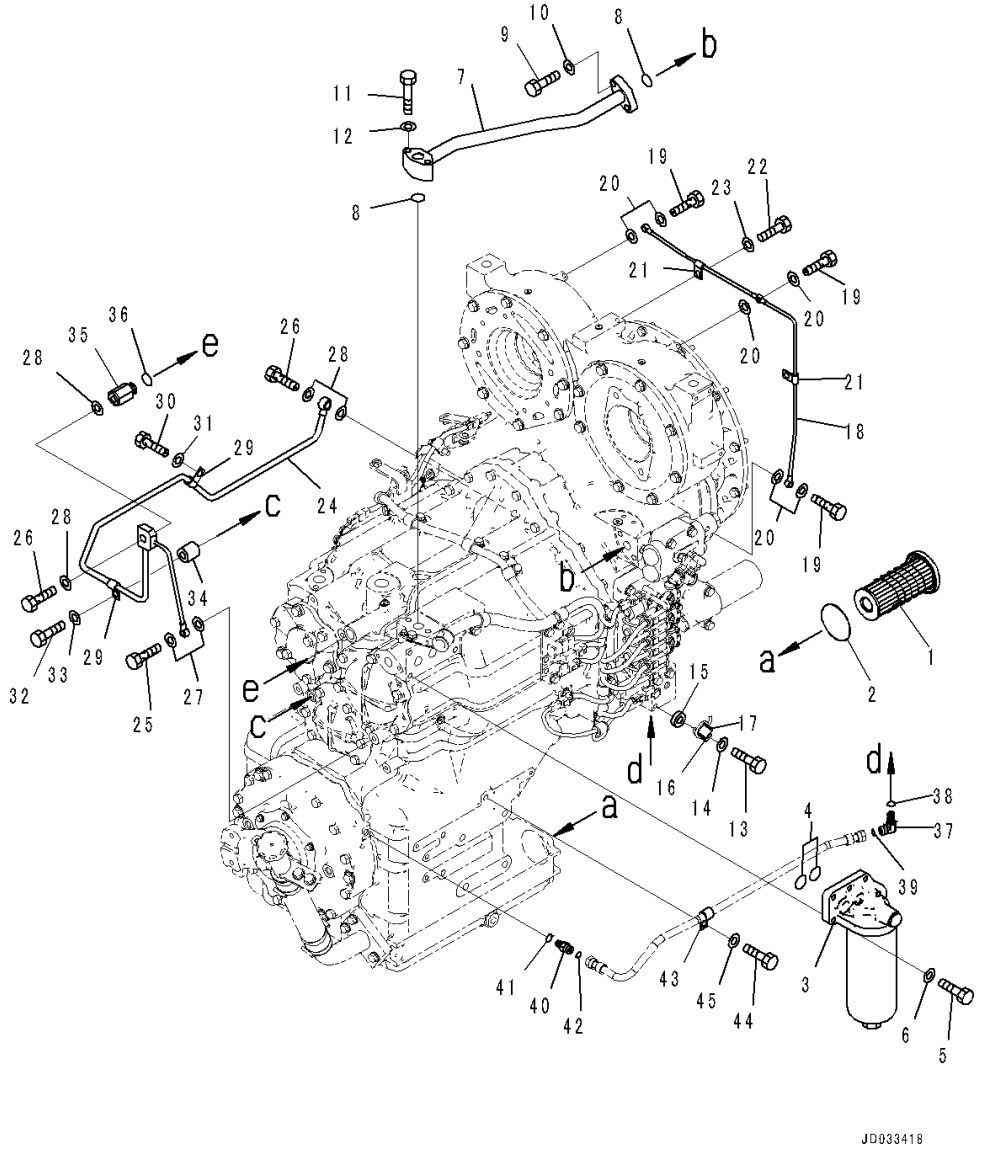

Index	Code	Part Number	Description	Qty	Serial Number
		Note: This list covers following specifications.			
		With Lockup Type			
		Without Lockup Type			
		714-07-40011	Transmission Assembly	1	90784-
			With Lockup Type		
		714-07-40001	Transmission Assembly	1	90784-
			Without Lockup Type		
1		56D-15-19311	• Strainer	1	90216-
2		07000-75085	• O-ring, (Kit : K01, K02, K04, K05)	1	90216-
3		714-07-48701	• Filter Assembly	1	90216-
		714-07-28713	• • Cartridge	1	90216-
4		07000-73035	• O-ring, (Kit : K01, K02, K04, K05)	2	90216-
5		01010-81040	• Bolt	5	90216-
6		01643-31032	• Washer	5	90216-
7		714-07-48511	• Tube	1	90216-
8		07000-73028	• O-ring, (Kit : K01, K02, K04, K05)	2	90216-
9		01010-81040	• Bolt	2	90216-
10		01643-31032	• Washer	2	90216-
11		01010-81060	• Bolt	2	90216-
12		01643-31032	• Washer	2	90216-
13		01010-81030	• Bolt	1	90216-
14		01643-31032	• Washer	1	90216-
15		560-43-15220	• Washer	1	90216-
16		04434-51610	• Clip	1	90216-
17		07095-20211	• Cushion	1	90216-
18		714-07-48521	• Tube	1	90216-
19		07206-30710	• Bolt, Joint	3	90216-
20		07005-01012	• Seal, Washer, (Kit : K01, K02, K04, K05)	6	90216-
21		04434-50610	• Clip	2	90216-
22		01010-81020	• Bolt	2	90216-
23		01643-31032	• Washer	2	90216-
24		714-07-48530	• Tube	1	90216-
25		07206-30812	• Bolt, Joint	1	90216-
26		07206-31216	• Bolt, Joint	2	90216-
27		07005-01212	• Seal, Washer, (Kit : K01, K02, K04, K05)	2	90216-
28		07005-01612	• Seal, Washer, (Kit : K01, K02, K04, K05)	4	90216-
29		04434-51212	• Clip	2	90216-
30		01010-81020	• Bolt	1	90216-
31		01643-31032	• Washer	1	90216-
32		01010-81045	• Bolt	1	90216-

FIG. F4300-004014 Torque Converter and Transmission (Piping)

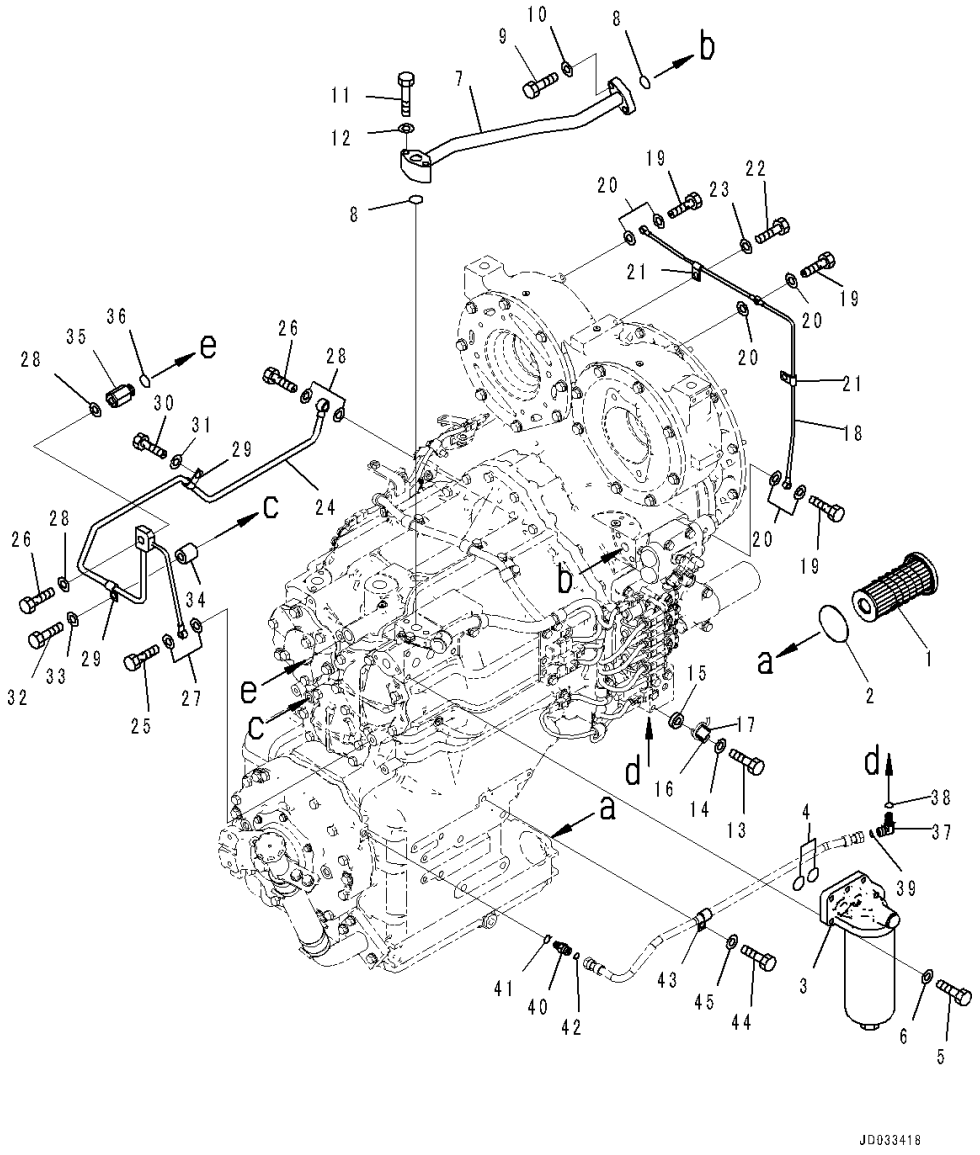

Index	Code	Part Number	Description	Qty	Serial Number
33		01643-31032	• Washer	1	90216-
34		144-874-7470	• Sheet	1	90216-
35		714-07-48581	• Adapter	1	90216-
36		07002-62434	• O-ring, (Kit : K01, K02, K04, K05)	1	90216-
37		02782-10311	• Elbow	1	90216-
38		07002-61423	• O-ring, (Kit : K01, K02, K04, K05)	1	90216-
39		02896-61009	• O-ring, (Kit : K01, K02, K04, K05)	1	90216-
40		02781-0031D	• Nipple	1	90216-
41		07002-61423	• O-ring, (Kit : K01, K02, K04, K05)	1	90216-
42		02896-61009	• O-ring, (Kit : K01, K02, K04, K05)	1	90216-
43		04434-51512	• Clip	1	90216-
44		01010-81020	• Bolt	1	90216-
45		01643-31032	• Washer	1	90216-

FIG. F4300-004015A Torque Converter and Transmission (Accessory) (1/2)

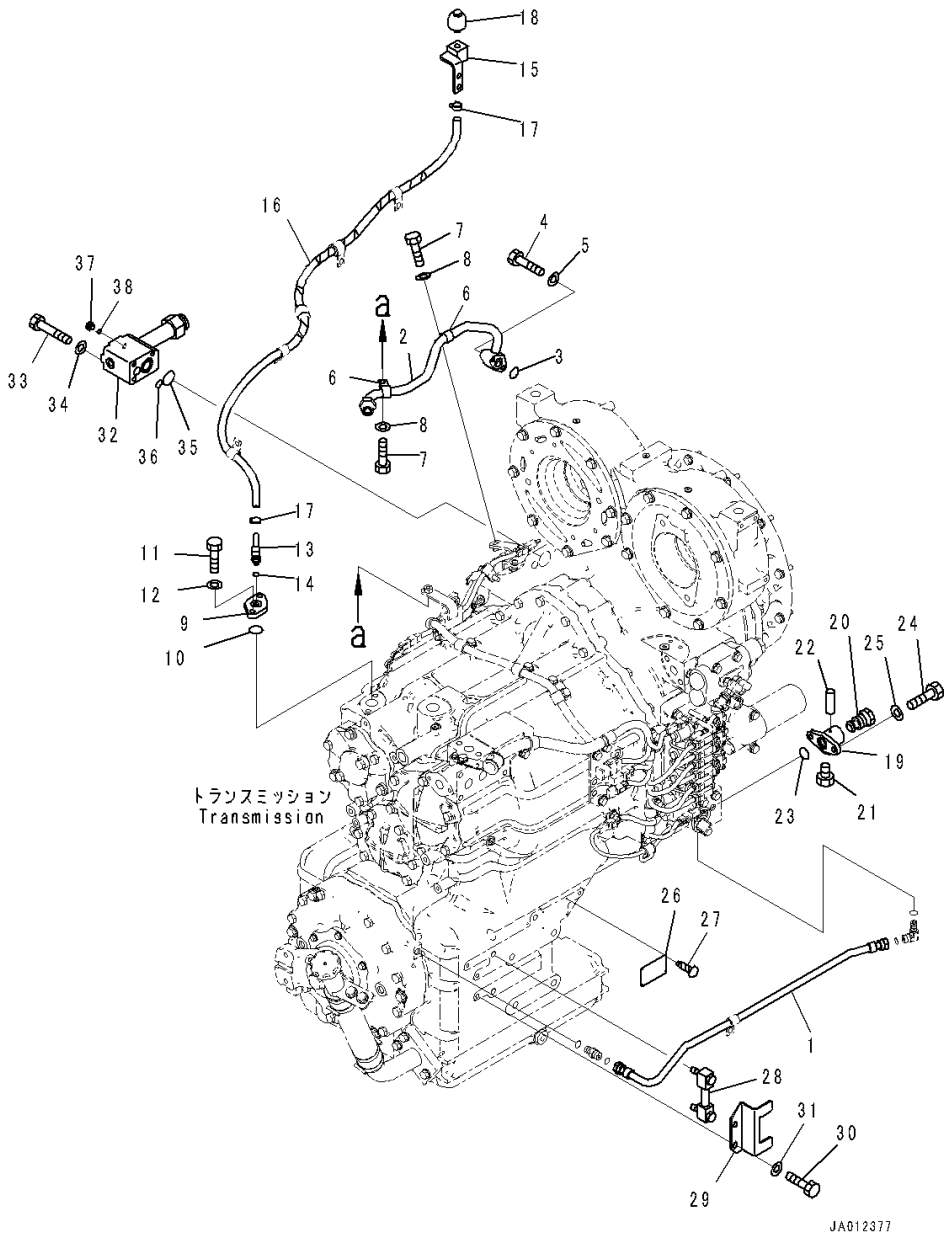

Index	Code	Part Number	Description	Qty	Serial Number
		Note: This list covers following specifications.			
		With Lockup Type			
		Without Lockup Type			
		714-07-40011	Transmission Assembly	1	90784-
			With Lockup Type		
		714-07-40001	Transmission Assembly	1	90784-
			Without Lockup Type		
1		714-07-48540	• Tube	1	90216-
2		421-62-45450	• Tube	1	90216-
3		07000-73025	• O-ring, (Kit : K02, K05)	1	90216-
4		01010-81055	• Bolt	2	90216-
5		01643-31032	• Washer	2	90216-
6		04434-52110	• Clip	2	90216-
7		01010-81025	• Bolt	2	90216-
8		01643-31032	• Washer	2	90216-
9		714-07-48411	• Flange	1	90216-
10		07000-73035	• O-ring, (Kit : K02, K05)	1	90216-
11		01010-81030	• Bolt	2	90216-
12		01643-31032	• Washer	2	90216-
13		714-07-38130	• Elbow	1	90216-
14		07002-61023	• O-ring, (Kit : K02, K05)	1	90216-
15		421-16-41210	• Block	1	90216-
16		421-16-45110	• Hose	1	90216-
17		11Y-09-11140	• Clip	2	90216-
18		07030-00252	• Breather	1	90216-
		6693-22-5600	• Valve Assembly	1	90784-
19	C1		• • Body	1	90784-
20		6693-22-5620	• • Valve	1	90784-
21		07040-02412	• • Plug	1	90784-
22		04020-00514	• • Pin, Dowel	1	90784-
23		07000-73028	• O-ring, (Kit : K02, K05)	1	90784-
24		01010-81025	• Bolt	2	90784-
25		01643-31032	• Washer	2	90784-
26	C2	09608-05080	• Plate, Name (Limited Supply)	1	90216-
27		04418-13060	• Screw	4	90216-
28		714-12-38400	• Gauge Assembly	1	90216-
		714-12-38410	• • Tube	1	90216-
		714-12-38420	• • Block	2	90216-
		714-12-38430	• • Bolt	2	90216-
		714-12-38440	• • O-ring	4	90216-

FIG. F4300-004015A Torque Converter and Transmission (Accessory) (1/2)

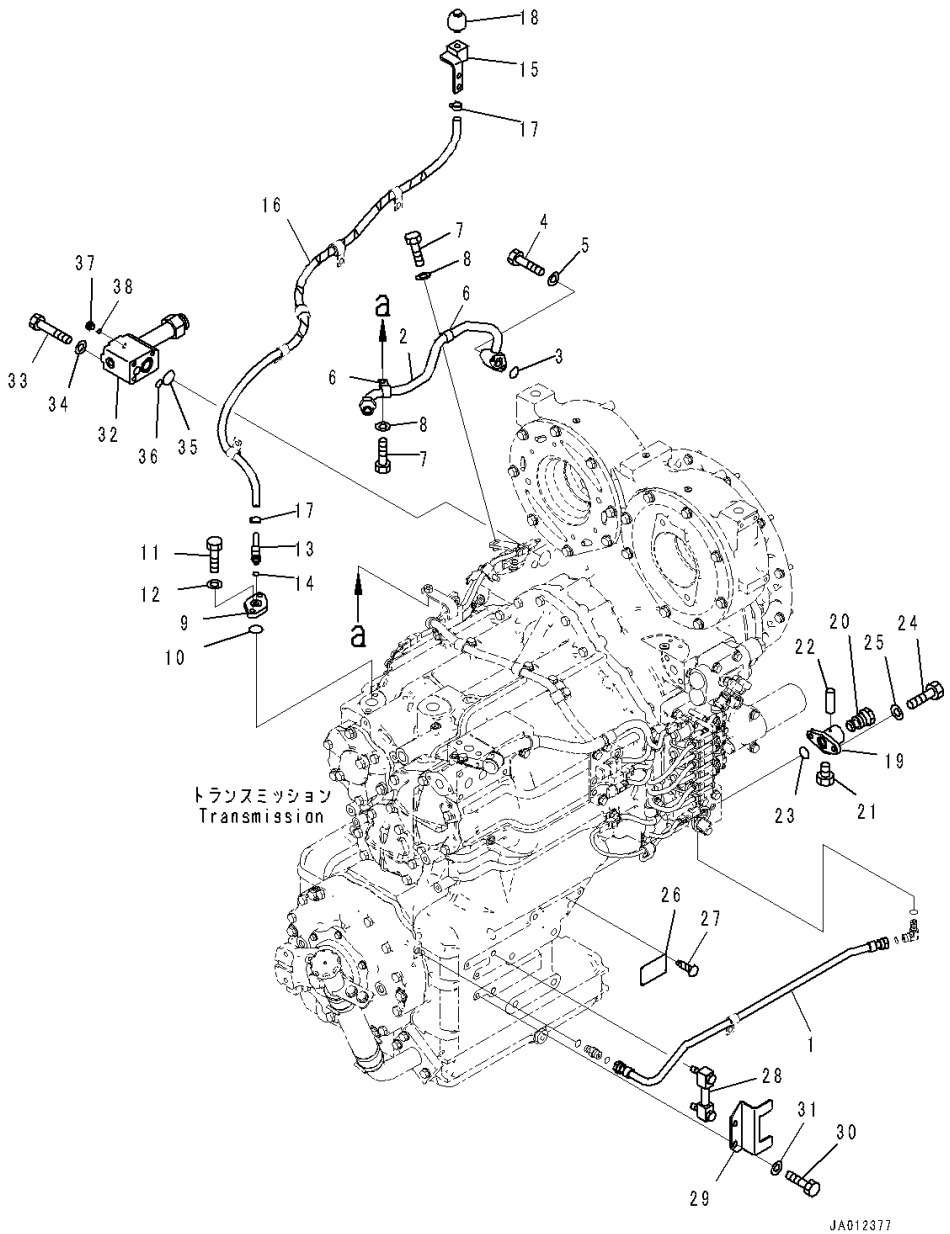

Index	Code	Part Number	Description	Qty	Serial Number
		07000-A2016	• • O-ring	4	90216-
29		714-12-38550	• Cover	1	90216-
30		01010-81020	• Bolt	2	90216-
31		01643-31032	• Washer	2	90216-
32		714-07-48550	• Tube	1	90216-
33		01011-81000	• Bolt	3	90216-
34		01643-31032	• Washer	3	90216-
35		07000-73030	• O-ring, (Kit : K02, K05)	1	90216-
36		07000-72015	• O-ring, (Kit : K02, K05)	1	90216-
37		708-8E-16150	• Plug	1	90216-
38		07002-61023	• O-ring, (Kit : K02, K05)	1	90216-

FIG. F4300-004016 Torque Converter and Transmission (With Lockup Type) (Accessory) (2/2)

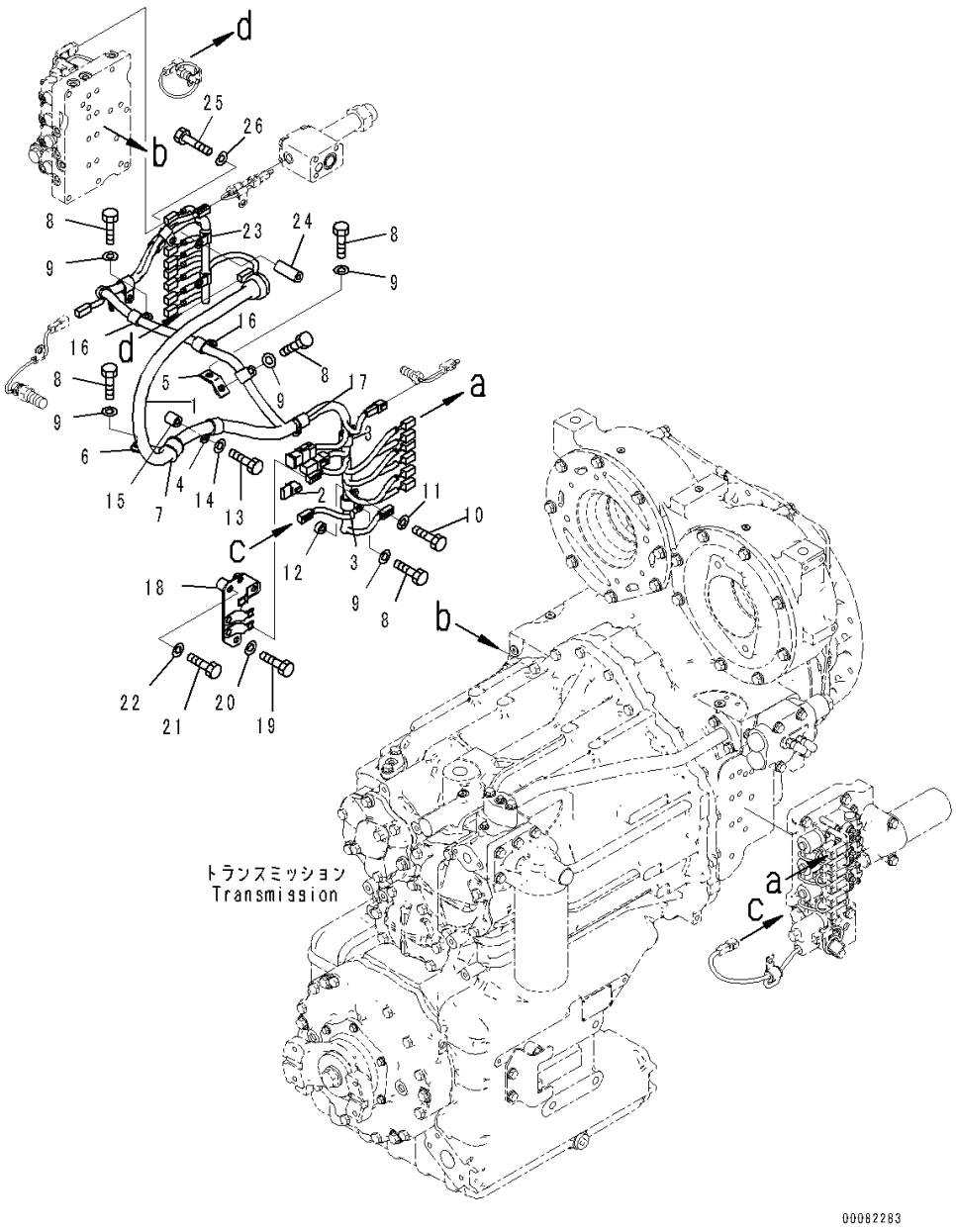

Index	Code	Part Number	Description	Qty	Serial Number
		714-07-40011	Transmission Assembly	1	90784-
1		714-07-45823	• Wiring Harness	1	90216-
2		21J-06-13661	• • Diode	1	90216-
3		600-051-2180	• Clip	2	90216-
4		600-051-2260	• Clip	1	90216-
5		714-12-38760	• Bracket	1	90216-
6		23B-40-43210	• Clip	1	90216-
7		07095-20523	• Cushion	1	90216-
8		01010-81020	• Bolt	7	90216-
9		01643-31032	• Washer	7	90216-
10		01010-81030	• Bolt	2	90216-
11		01643-31032	• Washer	2	90216-
12		560-43-15220	• Washer	2	90216-
13		01010-81045	• Bolt	1	90216-
14		01643-31032	• Washer	1	90216-
15		144-874-7470	• Sheet	1	90216-
16		600-051-2190	• Clip	3	90216-
17		600-051-2200	• Clip	1	90216-
18		714-07-45851	• Bracket	1	90216-
19		01010-81020	• Bolt	1	90216-
20		01643-31032	• Washer	1	90216-
21		01010-81045	• Bolt	1	90216-
22		01643-31032	• Washer	1	90216-
23		600-051-2160	• Clip	1	90216-
24		6150-81-6940	• Spacer	1	90216-
25		01010-81075	• Bolt	1	90216-
26		01643-31032	• Washer	1	90216-

FIG. F4300-004017 Torque Converter and Transmission (With Lockup Type) (Input Shaft)

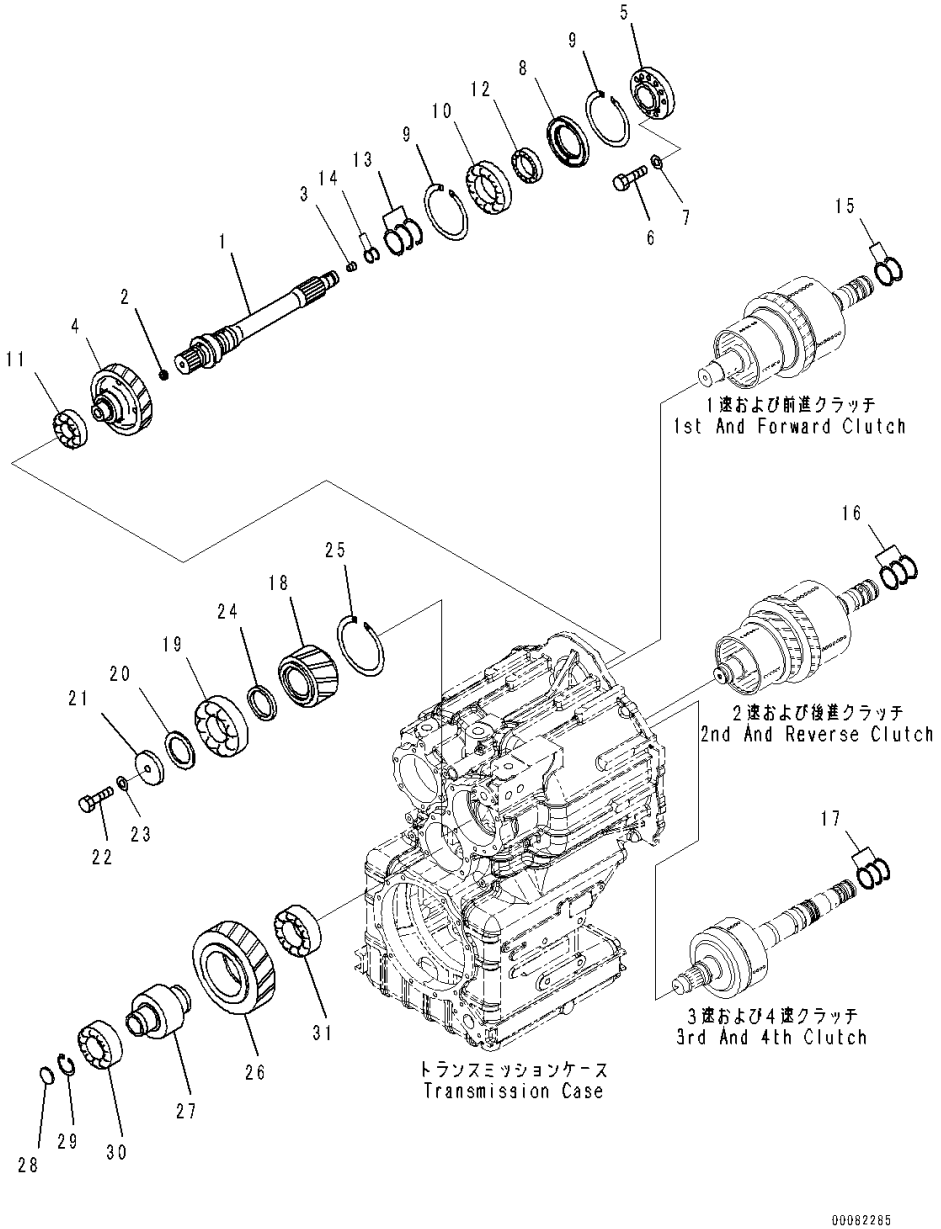

Index	Code	Part Number	Description	Qty	Serial Number
		714-07-40011	Transmission Assembly	1	90784-
1		714-07-42262	• Shaft	1	90216-
2		17A-22-47360	• Plug	1	90216-
3		07043-70211	• Plug	1	90216-
4		714-07-42511	• Gear	1	90216-
5		714-07-47713	• Cover	1	90216-
6		01010-81285	• Bolt	10	90216-
7		01643-31232	• Washer	10	90216-
8		714-07-46122	• Spacer	1	90216-
9		04071-00140	• Ring, Snap	2	90216-
10		714-07-49640	• Bearing	1	90216-
11		714-07-49410	• Bearing	1	90216-
12		714-07-49420	• Bearing	1	90216-
13		714-12-39210	• Seal Ring, (Kit : K01, K02)	3	90216-
14		714-21-19810	• Seal Ring, (Kit : K01, K02)	2	90216-
15		714-12-39230	• Seal Ring, (Kit : K01, K02)	3	90216-
16		714-12-39230	• Seal Ring, (Kit : K01, K02)	3	90216-
17		419-15-12122	• Ring, (Kit : K01, K02)	3	90216-
18		714-07-43211	• Gear	1	90216-
19		714-07-49610	• Bearing	1	90216-
20		714-07-49670	• Plate	1	90216-
21		234-15-23280	• Holder	1	90216-
22		01011-61615	• Bolt	1	90216-
23		01643-31645	• Washer	1	90216-
24		714-07-46320	• Spacer	1	90216-
25		04071-00150	• Ring, Snap	1	90216-
26		714-07-43223	• Gear	1	90216-
27		714-07-43323	• Shaft	1	90216-
28		714-07-46310	• Plate	1	90216-
29		04065-04518	• Ring, Snap	1	90216-
30		714-12-39360	• Bearing	1	90216-
31		714-07-49661	• Bearing	1	90216-

FIG. F4300-004018 Torque Converter and Transmission (Output Shaft)

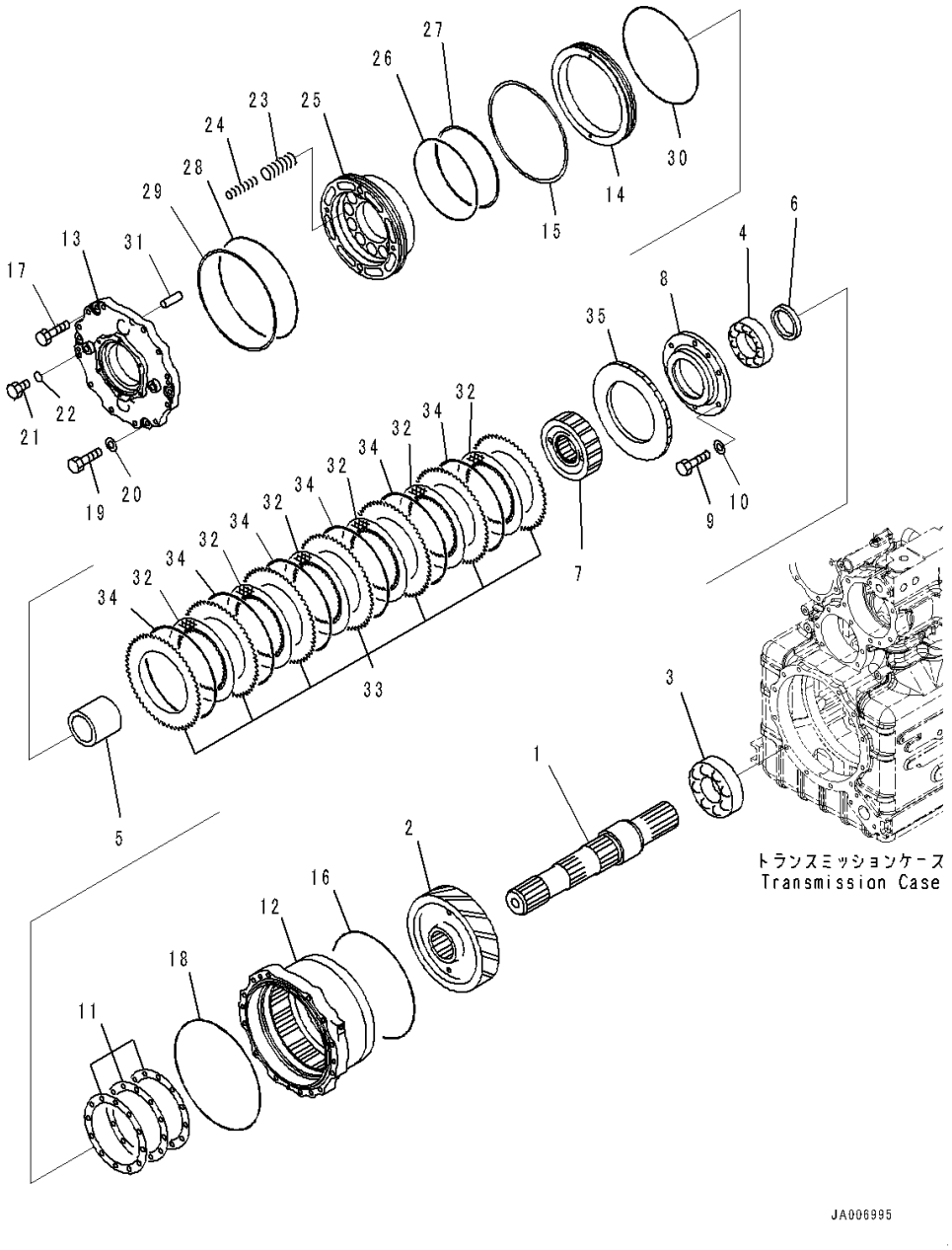

Index	Code	Part Number	Description	Qty	Serial Number
		Note: This list covers following specifications.			
		With Lockup Type			
		Without Lockup Type			
		714-07-40011	Transmission Assembly ..... With Lockup Type	1	90784-
		714-07-40001	Transmission Assembly ..... Without Lockup Type	1	90784-
1		714-07-42281	• Shaft	1	90216-
2		714-07-43231	• Gear	1	90216-
3		56B-15-19311	• Bearing, Taper Roller	1	90216-
4		706-88-40890	• Bearing	1	90216-
5		714-07-46211	• Spacer	1	90216-
6		195-15-42581	• Spacer	1	90216-
7		714-07-47141	• Hub	1	90216-
8		714-07-43831	• Retainer	1	90216-
9		01010-81240	• Bolt	6	90216-
10		01643-31232	• Washer	6	90216-
11		714-07-00330	• Shim Assembly, (Kit : K01, K02, K04, K05)	1	90216-
		714-07-44510	• • Shim, T=0.15mm	3	90216-
		714-07-44520	• • Shim, T=0.20mm	3	90216-
		714-07-44530	• • Shim, T=0.50mm	3	90216-
12		714-07-47112	• Housing	1	90216-
13		714-07-47121	• Cover	1	90216-
14		714-07-47131	• Spacer	1	90216-
15		175-15-69510	• Ring	1	90216-
16		07000-75295	• O-ring, (Kit : K01, K02, K04, K05)	1	90216-
17		01010-81285	• Bolt	12	90216-
18		07000-75305	• O-ring, (Kit : K01, K02, K04, K05)	1	90216-
19		01016-51260	• Bolt	4	90216-
20		01643-31232	• Washer	4	90216-
21		07040-11612	• Plug	2	90216-
22		07002-61623	• O-ring, (Kit : K01, K02, K04, K05)	2	90216-
23		714-07-27161	• Spring	12	90216-
24		714-07-27151	• Spring	12	90216-
25		714-07-42660	• Piston	1	90216-
26		07000-A6220	• O-ring, (Kit : K01, K02, K04, K05)	1	90216-
27		07001-06225	• Ring, Back-up, (Kit : K01, K02, K04, K05)	1	90216-
28		07000-A6275	• O-ring, (Kit : K01, K02, K04, K05)	1	90216-

FIG. F4300-004018 Torque Converter and Transmission (Output Shaft)

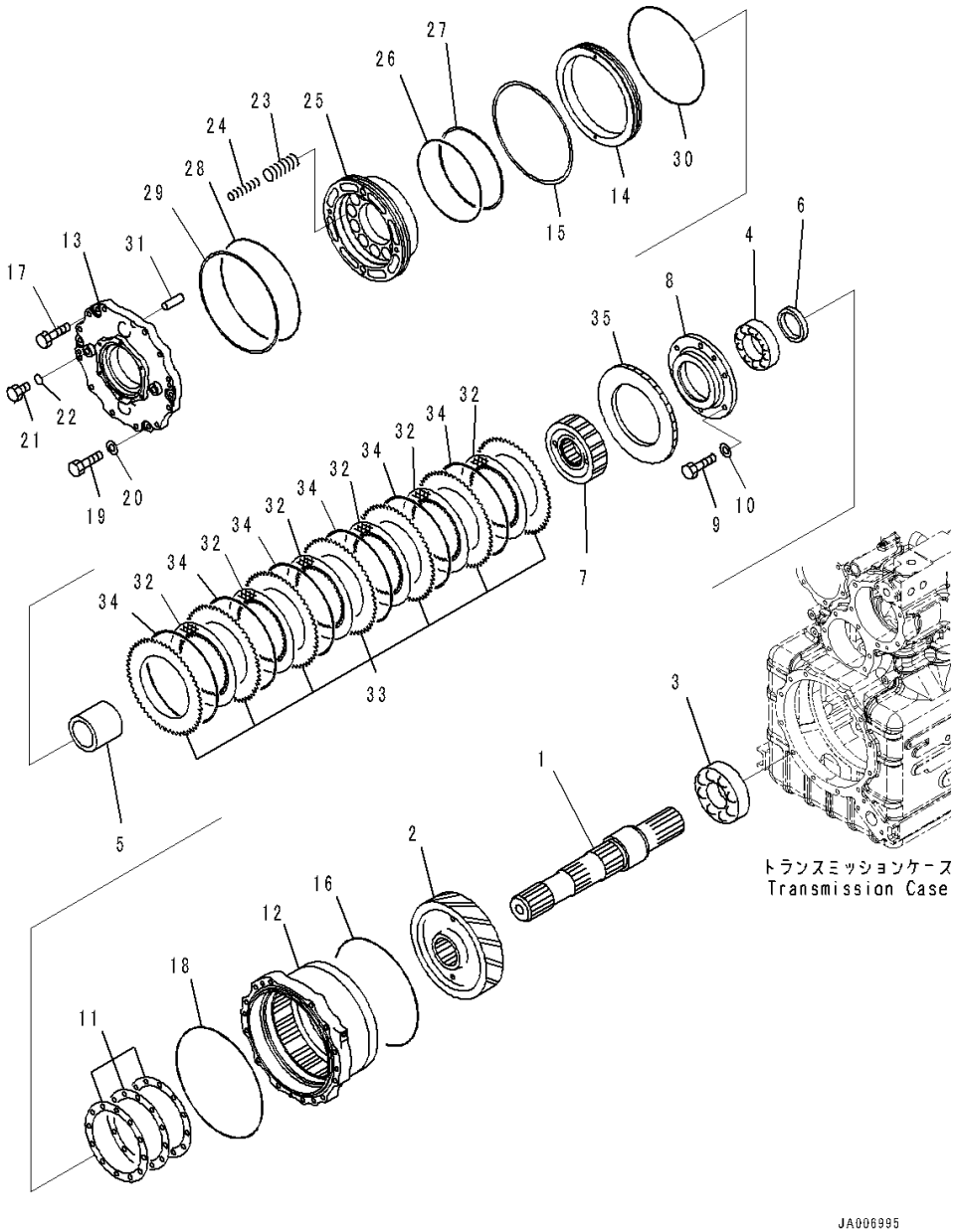

Index	Code	Part Number	Description	Qty	Serial Number
29		07001-06280	• Ring, Back-up, (Kit : K01, K02, K04, K05)	1	90216-
30		07000-A5270	• O-ring, (Kit : K01, K02, K04, K05)	1	90216-
31		04020-01842	• Pin, Dowel	2	90216-
32		425-32-22670	• Disc	6	90216-
33		425-32-22680	• Plate	7	90216-
34		425-32-28720	• Spring	6	90216-
35		714-07-47250	• Plate	1	90216-

FIG. F4300-004019 Torque Converter and Transmission (Coupling)

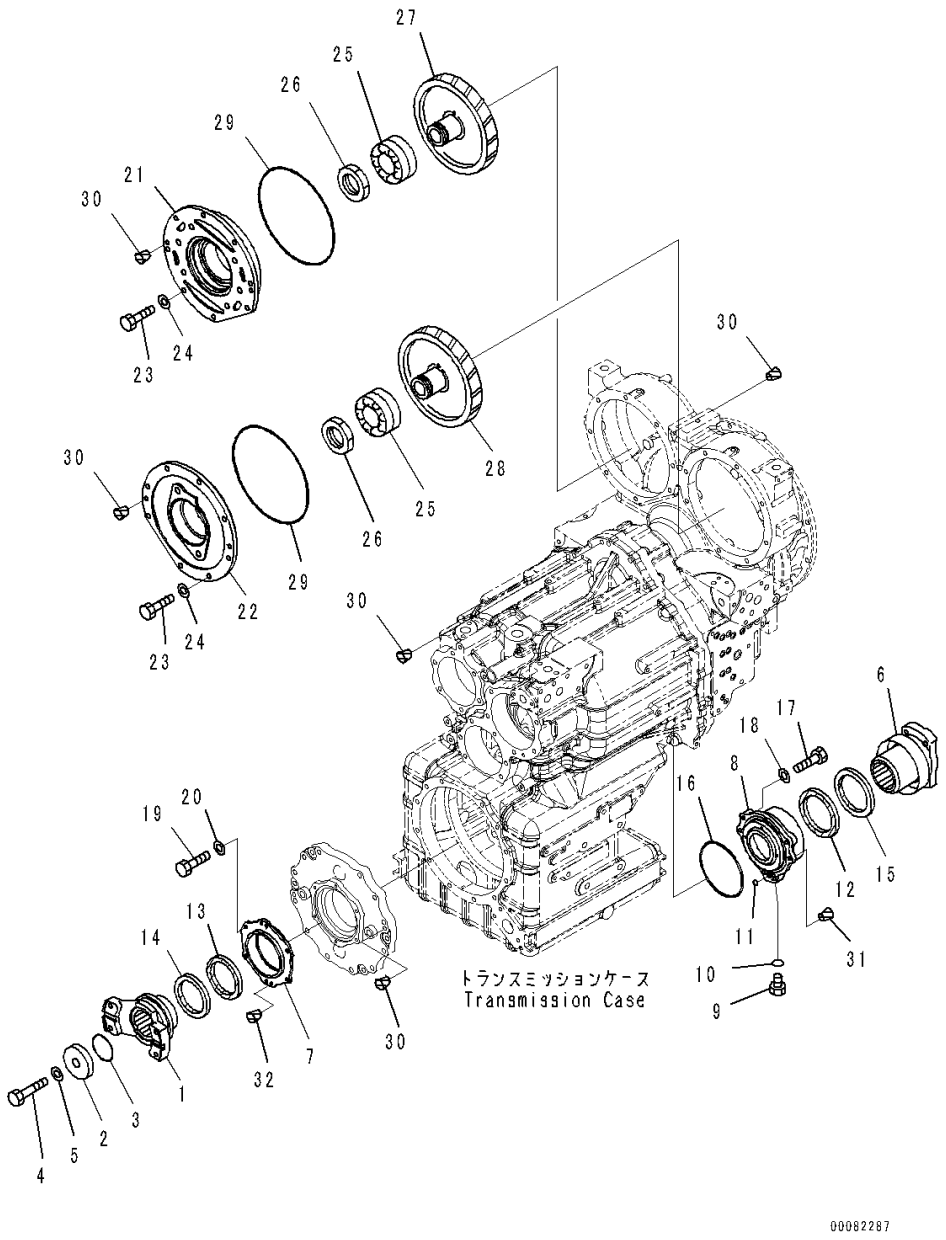

Index	Code	Part Number	Description	Qty	Serial Number
		Note: This list covers following specifications.			
		With Lockup Type			
		Without Lockup Type			
		714-07-40011	Transmission Assembly ..... With Lockup Type	1	90784-
		714-07-40001	Transmission Assembly ..... Without Lockup Type	1	90784-
1		425-15-23251	• Coupling Assembly	1	90784-
	C1		• • Coupling	1	90784-
	C1		• • Cover	1	90216-
2		425-15-13320	• Holder	1	90216-
3		07000-75065	• O-ring, (Kit : K01, K02, K04, K05)	1	90216-
4		01051-62220	• Bolt	1	90216-
5		01643-32260	• Washer	1	90216-
6		714-07-44201	• Coupling Assembly	1	90784-
	C1		• • Coupling	1	90784-
	C1		• • Cover	1	90216-
7		714-07-43811	• Retainer	1	90784-
8		714-07-43822	• Retainer, Rear	1	90784-
9		07040-11209	• Plug	1	90216-
10		07002-61223	• O-ring, (Kit : K01, K02, K04, K05)	1	90216-
11		07000-72012	• O-ring, (Kit : K01, K02, K04, K05)	1	90216-
12		07012-50105	• Seal, Oil, (Kit : K01, K02, K04, K05)	1	90216-
13		714-07-39120	• Seal, Oil, (Kit : K01, K02, K04, K05)	1	90216-
14		425-15-28710	• Seal, Dust, (Kit : K01, K02, K04, K05)	1	90216-
15		714-07-18541	• Seal, Dust, (Kit : K01, K02, K04, K05)	1	90216-
16		07000-75150	• O-ring, (Kit : K01, K02, K04, K05)	2	90216-
17		01010-81045	• Bolt	4	90216-
18		01643-31032	• Washer	4	90216-
19		01010-80820	• Bolt	6	90216-
20		01643-30823	• Washer	6	90216-
21		714-07-44152	• Cage, R.H.	1	90216-
22		714-07-44160	• Cage, L.H.	1	90216-
23		01010-81235	• Bolt	16	90216-
24		01643-31232	• Washer	16	90216-
25		711-49-14230	• Bearing	2	90216-
26		01530-05814	• Nut, Lock	2	90216-
27		714-07-43411	• Gear, R.H.	1	90216-
28		714-07-43421	• Gear, L.H.	1	90216-
29		07000-75270	• O-ring, (Kit : K01, K02, K04, K05)	2	90216-

FIG. F4300-004019 Torque Converter and Transmission (Coupling)

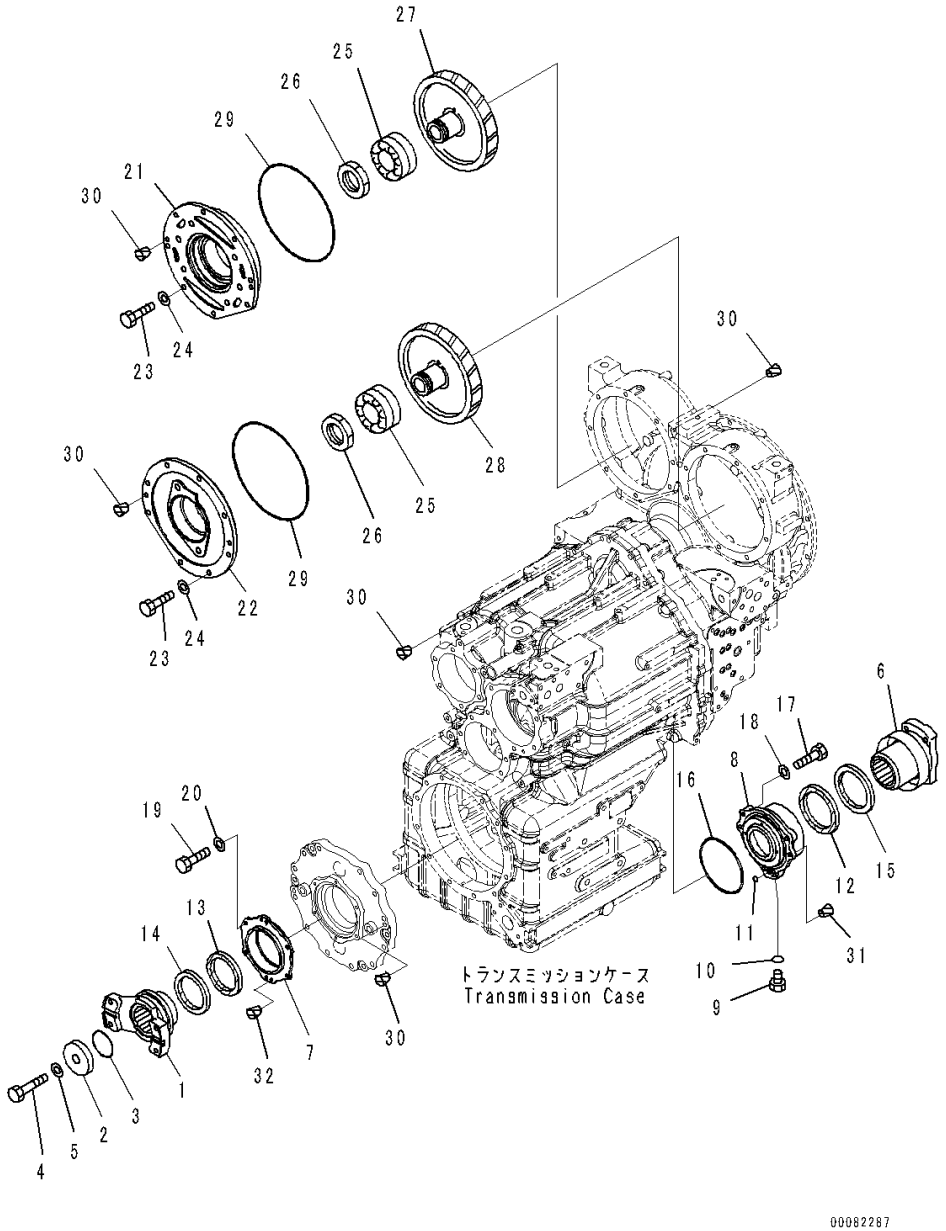

Index	Code	Part Number	Description	Qty	Serial Number
30		07049-01215	• Plug	17	90216-
31		07049-01012	• Plug	2	90216-
32		07049-00811	• Plug	2	90216-

FIG. F4300-004020 Torque Converter and Transmission (Mounting) (1/3)

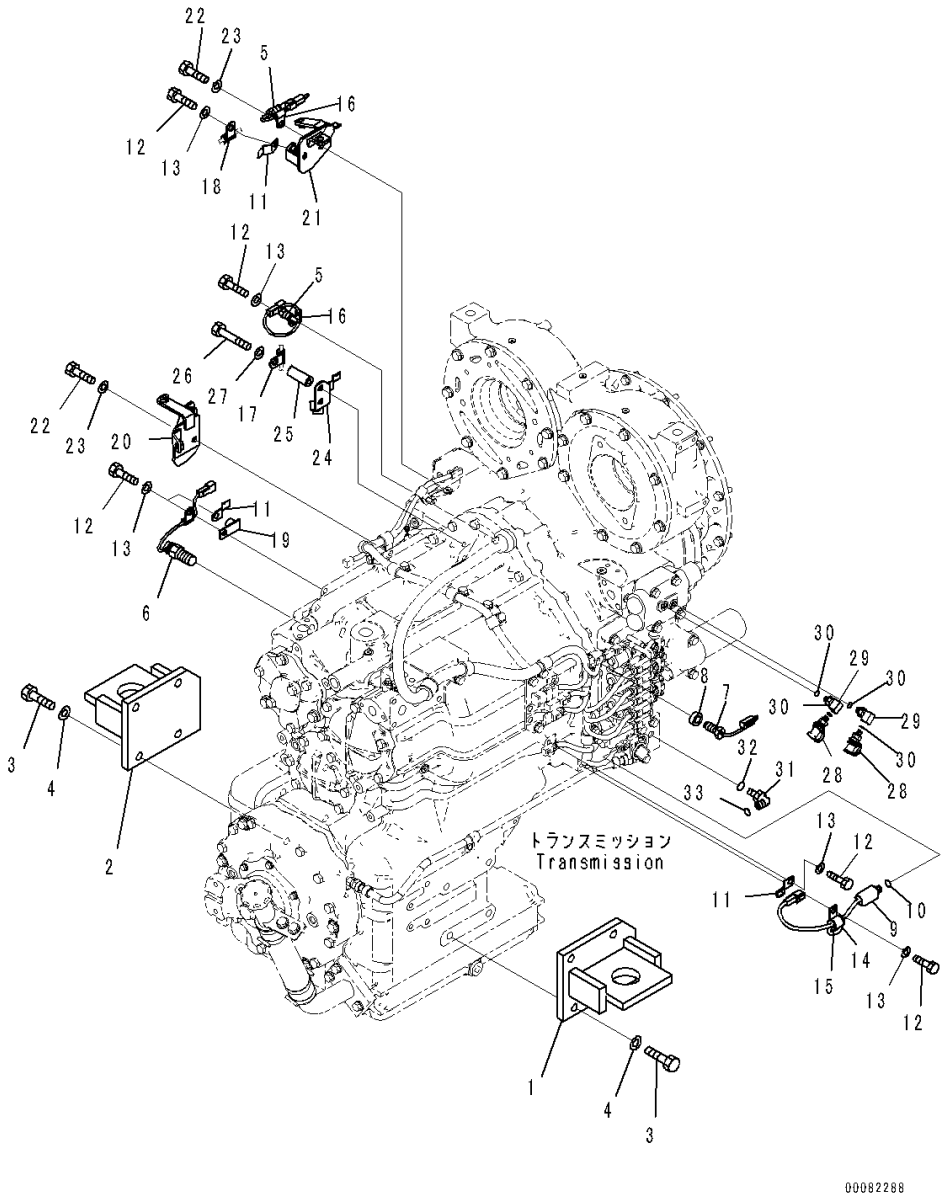

Index	Code	Part Number	Description	Qty	Serial Number
		Note: This list covers following specifications.			
		With Lockup Type			
		Without Lockup Type			
1		421-01-41180	Bracket, L.H.	1	90216-
2		421-01-41190	Bracket, R.H.	1	90216-
3		01010-61650	Bolt	8	90216-
4		01643-31645	Washer	8	90216-
5		7861-93-3320	Sensor, Oil Temperature	2	90216-
6		7861-93-2330	Sensor, Magnetic Pick-Up	1	90216-
7		14Y-22-55510	Sensor, Pressure	1	90216-
8		714-07-47340	Spacer	1	90216-
9		418-43-37681	Switch, Pressure	1	90216-
10		07002-61423	O-ring, (Kit : K01, K02, K04, K05)	1	90216-
11		08193-21012	Clip	5	90216-
12		01010-81020	Bolt	10	90216-
13		01643-31032	Washer	10	90216-
14		04434-51610	Clip	1	90216-
15		07095-20211	Cushion	1	90216-
16		600-051-2060	Clip	3	90216-
17		600-051-2160	Clip	1	90216-
18		600-051-2190	Clip	3	90216-
19		426-06-11570	Bracket	1	90216-
20		421-62-45360	Bracket	1	90216-
21		421-62-45510	Bracket	1	90216-
22		01010-81025	Bolt	4	90216-
23		01643-31032	Washer	4	90216-
24		421-06-42470	Bracket	1	90216-
25		6150-81-6940	Spacer	1	90216-
26		01010-81075	Bolt	1	90216-
27		01643-31032	Washer	1	90216-
28		799-101-5220	Nipple	2	90216-
29		17M-61-42710	Elbow	2	90216-
30		07002-61023	O-ring, (Kit : K01, K02, K04, K05)	4	90216-
31		02782-1021A	Elbow	1	90216-
32		07002-61423	O-ring, (Kit : K01, K02, K04, K05)	1	90216-
33		02896-61008	O-ring, (Kit : K01, K02, K04, K05)	1	90216-

FIG. F4300-004021 Torque Converter and Transmission (Mounting) (2/3)

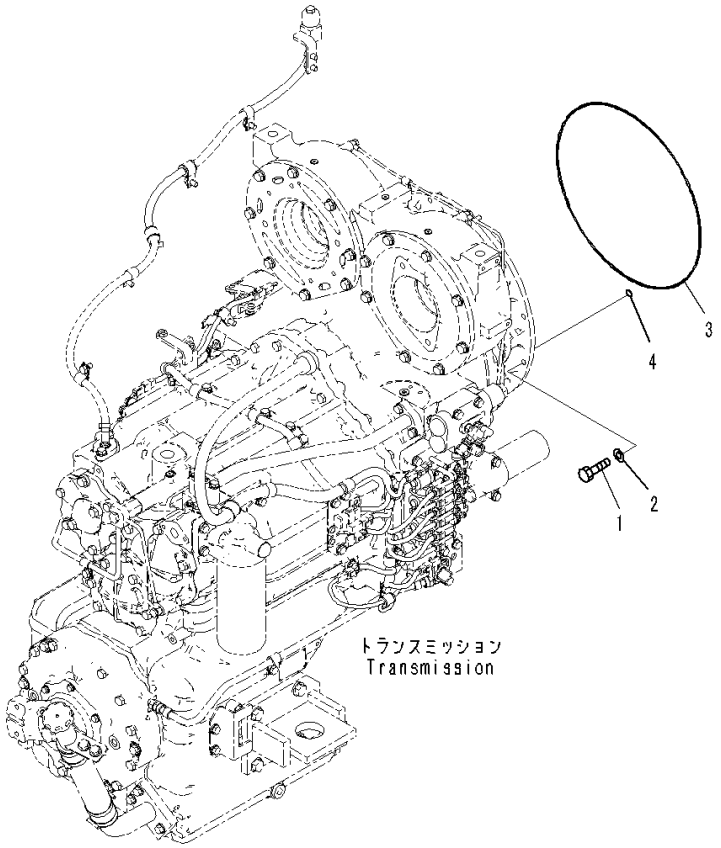

Index	Code	Part Number	Description	Qty	Serial Number
		Note: This list covers following specifications.			
		With Lockup Type			
		Without Lockup Type			
1		01010-61035	Bolt	12	90216-
2		01643-31032	Washer	12	90216-
3		120-10-31120	O-ring	1	90216-
4		07000-12012	O-ring	1	90216-

FIG. F4300-004022 Torque Converter and Transmission (Torque Converter Cooler Piping)

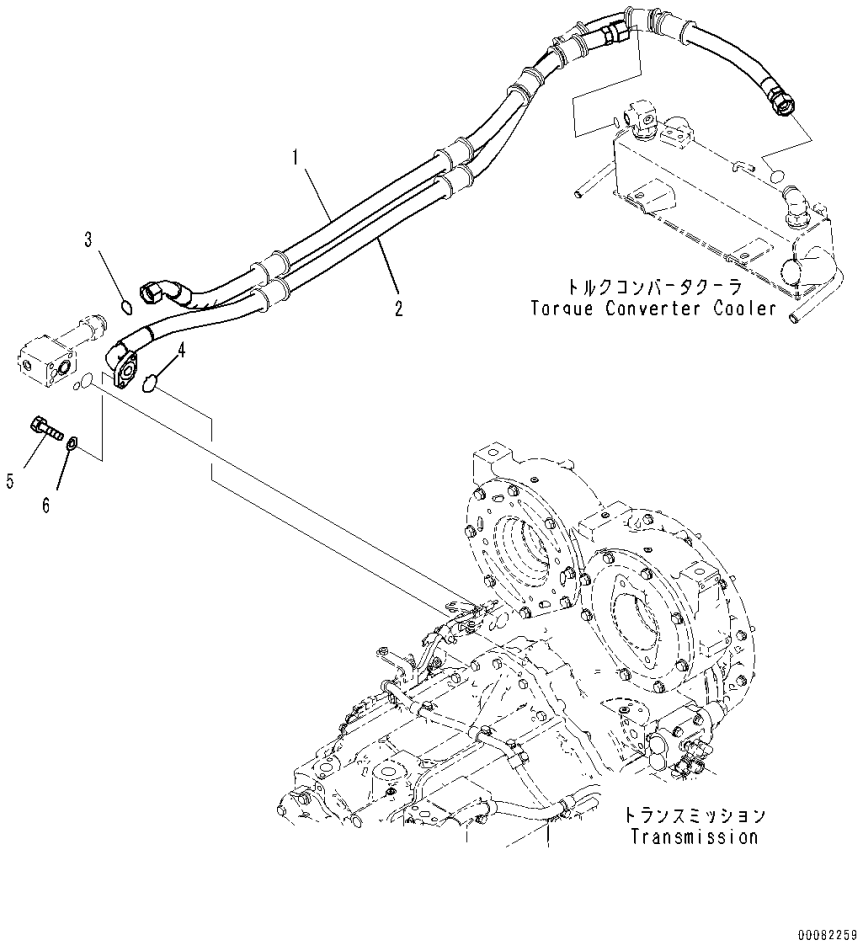

Index	Code	Part Number	Description	Qty	Serial Number
		Note: This list covers following specifications.			
		With Lockup Type			
		Without Lockup Type			
1		421-09-45111	Hose	1	90446-
2		421-09-45120	Hose	1	90216-
3		421-09-31140	O-ring	1	90216-
4		07000-A3032	O-ring	1	90216-
5		01010-81035	Bolt	2	90216-
6		01643-31032	Washer	2	90216-

FIG. F4300-004023A Torque Converter and Transmission (Torque Converter Cooler Piping Mounting)

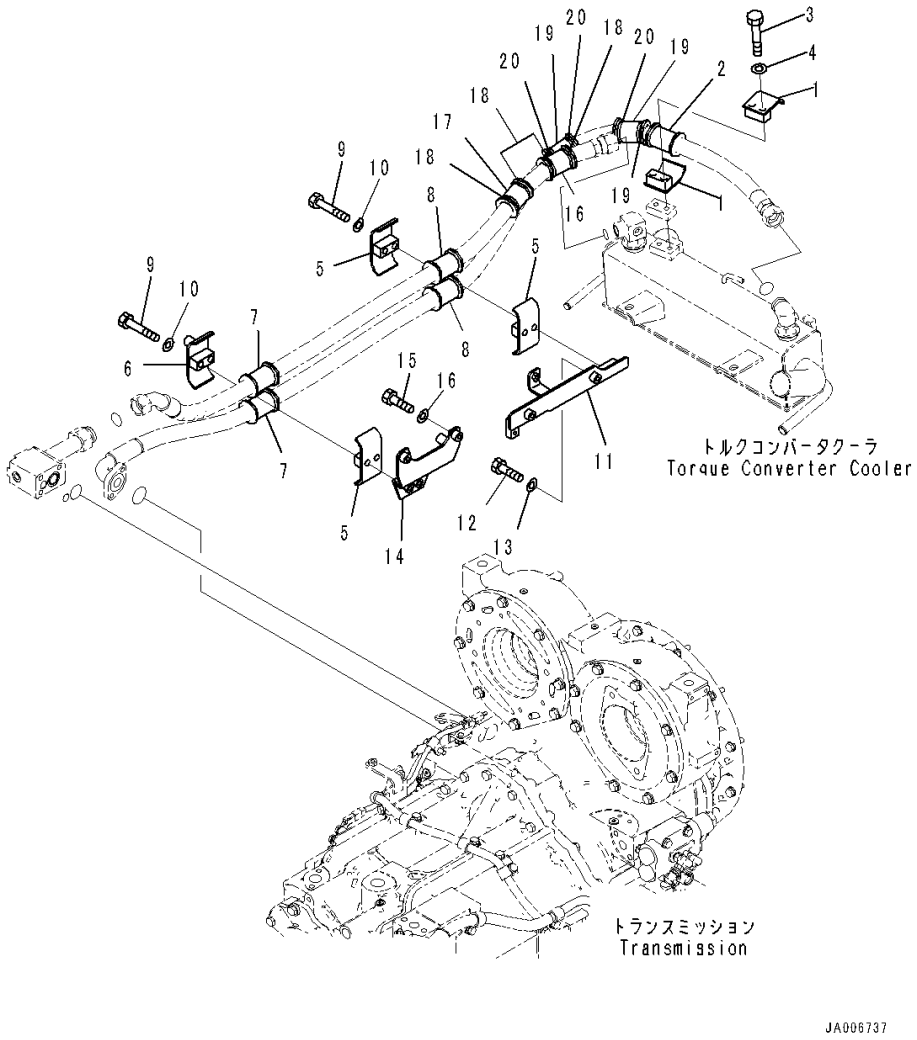

Index	Code	Part Number	Description	Qty	Serial Number
		Note: This list covers following specifications.			
		With Lockup Type			
		Without Lockup Type			
1		22P-62-13530	Clamp	2	90216-
2		07095-01035	Cushion	1	90216-
3		01010-81280	Bolt	2	90216-
4		01643-31232	Washer	2	90216-
5		22P-62-13560	Clamp	3	90216-
6		421-62-41450	Clamp	1	90216-
7		07095-01035	Cushion	2	90446-
8		07095-01033	Cushion	2	90446-
9		01010-81280	Bolt	4	90216-
10		01643-31232	Washer	4	90216-
11		421-62-41180	Bracket	1	90216-
12		01010-81035	Bolt	2	90216-
13		01643-31032	Washer	2	90216-
14		421-62-41440	Bracket	1	90216-
15		01010-81035	Bolt	2	90216-
16		01643-31032	Washer	2	90216-
17		07095-01033	Cushion	2	90446-
18		08034-20823	Band	4	90216-
19		07095-01035	Cushion	2	90216-
20		08034-20823	Band	4	90216-

FIG. F4300-004024 Torque Converter and Transmission (Mounting) (3/3)

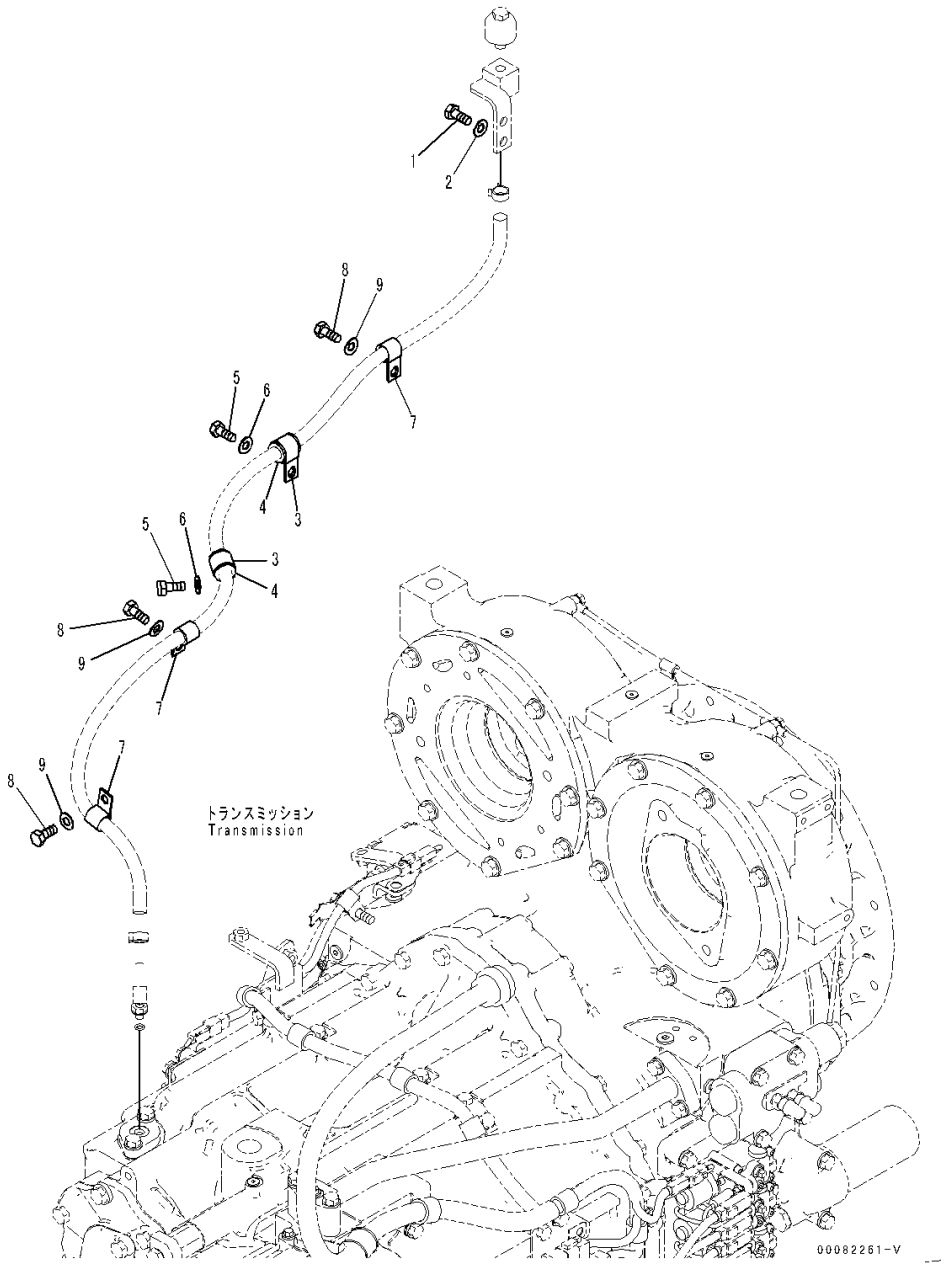

Index	Code	Part Number	Description	Qty	Serial Number
		Note: This list covers following specifications.			
		With Lockup Type			
		Without Lockup Type			
1		01010-81020	Bolt	2	90216-
2		01643-31032	Washer	2	90216-
3		04434-52110	Clip	2	90216-
4		07095-20314	Cushion	2	90216-
5		01010-81020	Bolt	2	90216-
6		01643-31032	Washer	2	90216-
7		04434-51610	Clip	3	90216-
8		01010-81020	Bolt	3	90216-
9		01643-31032	Washer	3	90216-

FIG. F4300-004025 Torque Converter and Transmission (Filler Tube)

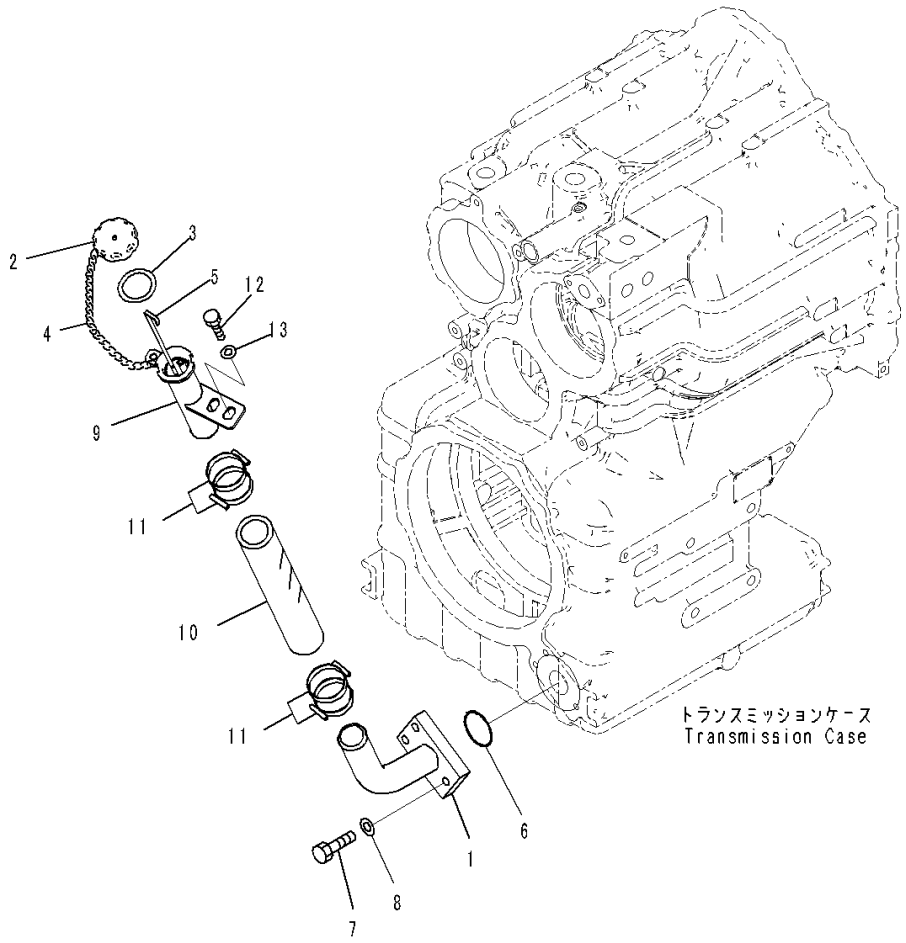

Index	Code	Part Number	Description	Qty	Serial Number
		Note: This list covers following specifications.			
		With Lockup Type			
		Without Lockup Type			
1		421-18-42170	Tube	1	90216-
2		6136-21-7120	Cap Assembly	1	90216-
3		6136-21-7180	• Gasket	1	90216-
4		6136-21-7190	Chain	1	90216-
5		421-18-42140	Gauge	1	90216-
6		07000-72055	O-ring	1	90216-
7		07372-21245	Bolt	3	90216-
8		01643-51232	Washer	3	90216-
9		421-18-42160	Tube	1	90216-
10		07260-04136	Hose	1	90216-
11		07289-00055	Clamp	4	90216-
12		01010-81225	Bolt	2	90216-
13		01643-31232	Washer	2	90216-

FIG. F4300-004026 Torque Converter and Transmission (Parking Brake Piping)

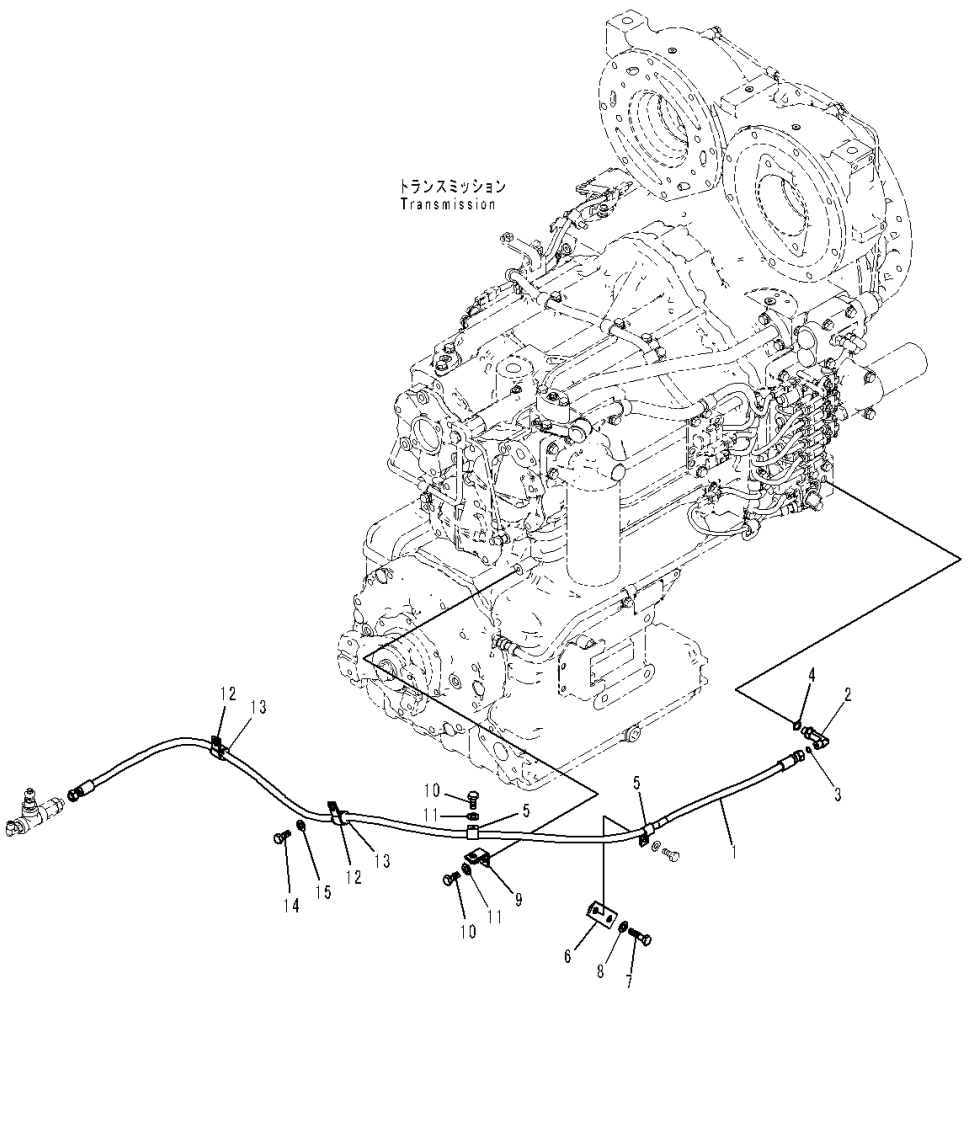

Index	Code	Part Number	Description	Qty	Serial Number
		Note: This list covers following specifications.			
		With Lockup Type			
		Without Lockup Type			
1		421-43-47560	Hose	1	90216-
2		02782-1021A	Elbow	1	90216-
3		02896-61008	O-ring	1	90216-
4		07002-61423	O-ring	1	90216-
5		04434-51310	Clip	2	90216-
6		421-43-47570	Bracket	1	90216-
7		01010-81060	Bolt	1	90216-
8		01643-31032	Washer	1	90216-
9		22T-61-18130	Plate	1	90216-
10		01010-81020	Bolt	2	90216-
11		01643-31032	Washer	2	90216-
12		04434-51910	Clip	2	90216-
13		07095-20213	Cushion	2	90216-
14		01010-81020	Bolt	2	90216-
15		01643-31032	Washer	2	90216-

FIG. F4300-003001 Torque Converter and Transmission (Without Lockup Type) (Pump and Turbine)

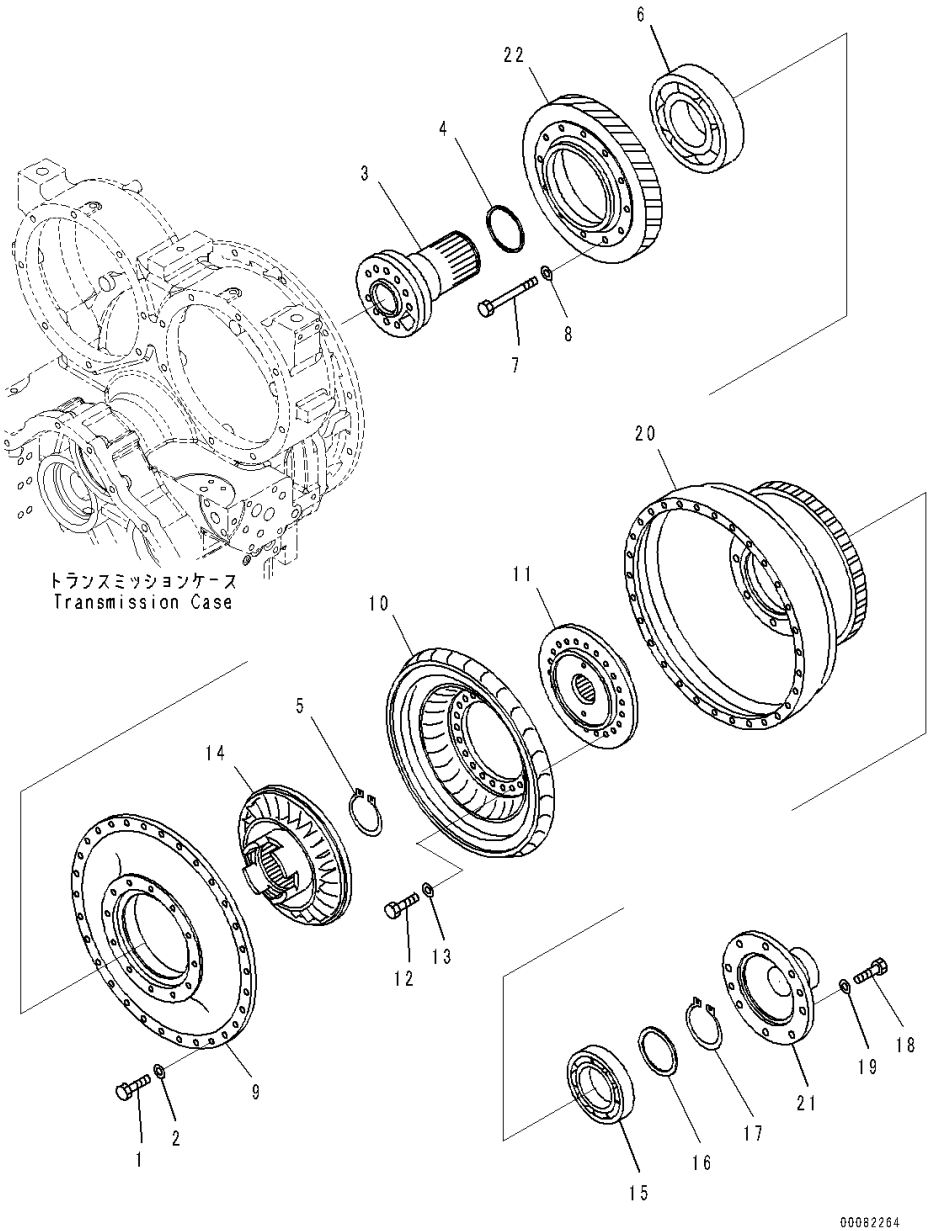

Index	Code	Part Number	Description	Qty	Serial Number
		714-07-40001	Transmission Assembly	1	90784-
		711-47-71000	• Torque Converter	1	90216-
1		01010-81030	• • Bolt	30	90216-
2		01643-31032	• • Washer	30	90216-
3		711-47-72520	• • Shaft	1	90216-
4		195-13-12711	• • Seal Ring, (Kit : K04, K05)	1	90216-
5		04064-08530	• • Ring, Snap, for Shaft Side	1	90216-
6		711-47-71551	• • Bearing	1	90216-
7		01010-81065	• • Bolt	12	90216-
8		01643-31032	• • Washer	12	90216-
9		711-47-71121	• • Pump	1	90216-
10		23W-13-11520	• • Turbine	1	90216-
11		711-47-71530	• • Boss	1	90216-
12		01010-81030	• • Bolt	22	90216-
13		01643-31032	• • Washer	22	90216-
14		711-47-72111	• • Stator	1	90216-
15		711-16-11560	• • Bearing	1	90216-
16		711-53-11770	• • Plate	1	90216-
17		04064-08025	• • Ring, Snap	1	90216-
18		01010-81235	• • Bolt	8	90216-
19		01643-31232	• • Washer	8	90216-
20		711-47-71211	• • Case	1	90216-
21		711-47-71250	• • Pilot	1	90216-
22		711-47-71141	• • Gear	1	90216-

FIG. F4300-003013 Torque Converter and Transmission (Without Lockup Type) (Control Valve) (7/7)

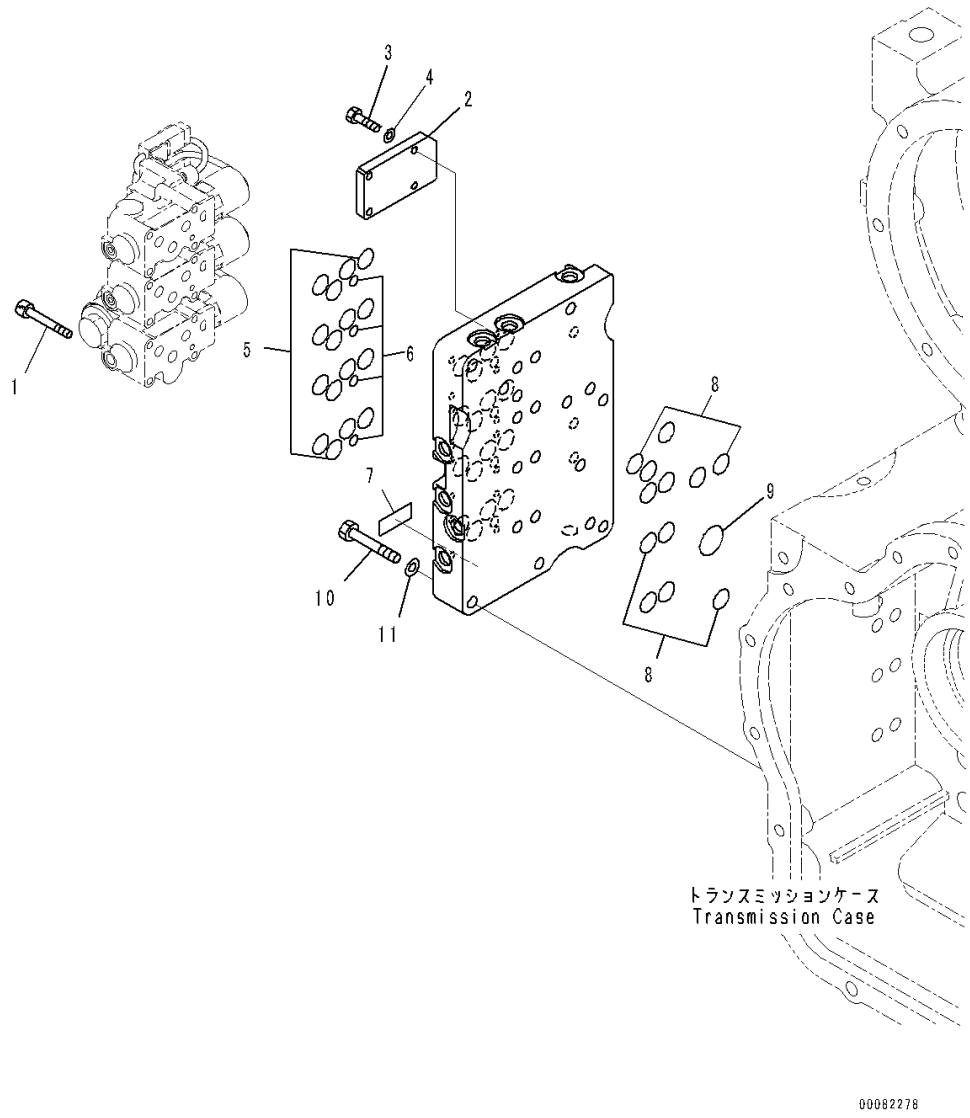

Index	Code	Part Number	Description	Qty	Serial Number
		714-07-40001	Transmission Assembly	1	90784-
		714-07-45200	• Valve Assembly	1	90216-
1		01252-70650	• • Bolt	12	90216-
2		714-07-45160	• • Cover	1	90216-
3		01010-80620	• • Bolt	4	90216-
4		01643-30623	• • Washer	4	90216-
5		07000-72015	• • O-ring, (Kit : K06)	16	90216-
6		07000-71007	• • O-ring, (Kit : K06)	4	90216-
7	C2	700-11-31980	• • Plate, Name (Limited Supply)	1	90216-
8		07000-72015	• O-ring, (Kit : K06)	12	90216-
9		07000-73022	• O-ring, (Kit : K06)	1	90216-
10		01010-81055	• Bolt	6	90216-
11		01643-31032	• Washer	6	90216-

FIG. F4300-003016 Torque Converter and Transmission (Without Lockup Type) (Accessory) (2/2)

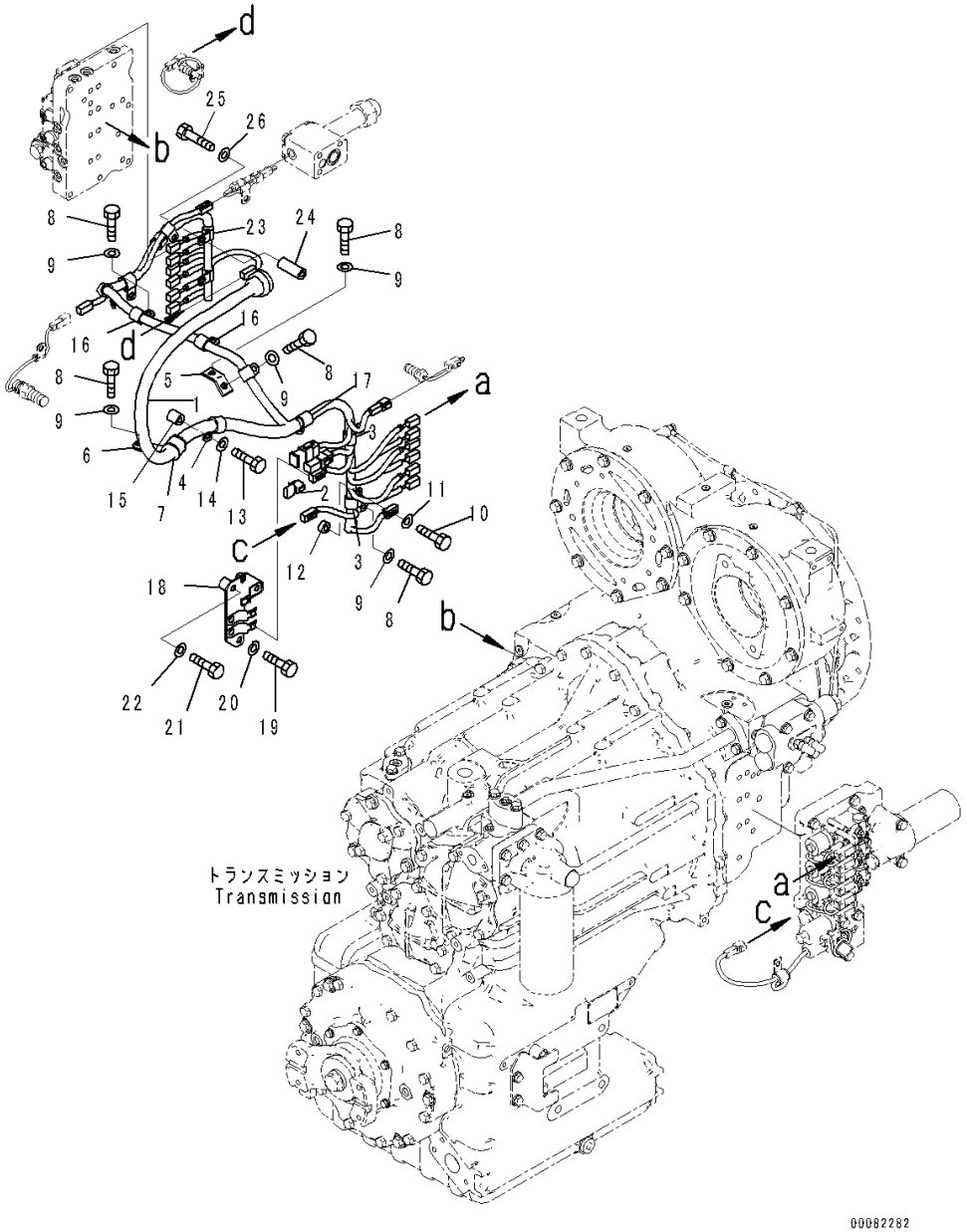

Index	Code	Part Number	Description	Qty	Serial Number
		714-07-40001	Transmission Assembly	1	90784-
1		714-07-45812	• Wiring Harness	1	90216-
2		21J-06-13661	• • Diode	1	90216-
3		600-051-2180	• Clip	2	90216-
4		600-051-2260	• Clip	1	90216-
5		714-12-38760	• Bracket	1	90216-
6		23B-40-43210	• Clip	1	90216-
7		07095-20523	• Cushion	1	90216-
8		01010-81020	• Bolt	7	90216-
9		01643-31032	• Washer	7	90216-
10		01010-81030	• Bolt	2	90216-
11		01643-31032	• Washer	2	90216-
12		560-43-15220	• Washer	2	90216-
13		01010-81045	• Bolt	1	90216-
14		01643-31032	• Washer	1	90216-
15		144-874-7470	• Sheet	1	90216-
16		600-051-2190	• Clip	3	90216-
17		600-051-2200	• Clip	1	90216-
18		714-07-45851	• Bracket	1	90216-
19		01010-81020	• Bolt	1	90216-
20		01643-31032	• Washer	1	90216-
21		01010-81045	• Bolt	1	90216-
22		01643-31032	• Washer	1	90216-
23		600-051-2160	• Clip	1	90216-
24		6150-81-6940	• Spacer	1	90216-
25		01010-81075	• Bolt	1	90216-
26		01643-31032	• Washer	1	90216-

FIG. F4300-003017 Torque Converter and Transmission (Without Lockup Type) (Input Shaft)

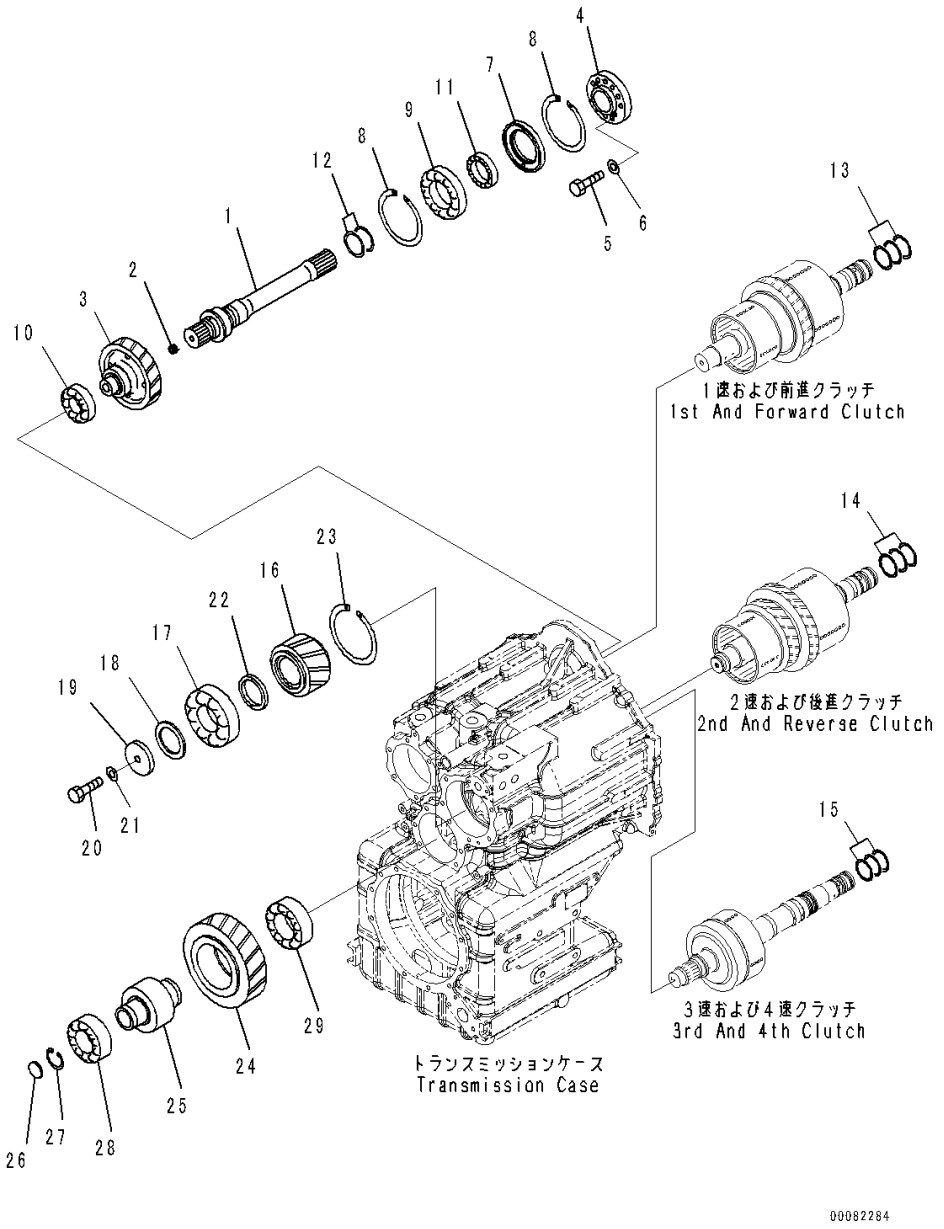

Index	Code	Part Number	Description	Qty	Serial Number
		714-07-40001	Transmission Assembly	1	90784-
1		714-07-42252	• Shaft	1	90216-
2		17A-22-47360	• Plug	1	90216-
3		714-07-42511	• Gear	1	90216-
4		714-07-47713	• Cover	1	90216-
5		01010-81285	• Bolt	10	90216-
6		01643-31232	• Washer	10	90216-
7		714-07-46122	• Spacer	1	90216-
8		04071-00140	• Ring, Snap	2	90216-
9		714-07-49640	• Bearing	1	90216-
10		714-07-49410	• Bearing	1	90216-
11		714-07-49420	• Bearing	1	90216-
12		714-12-39210	• Seal Ring, (Kit : K04, K05)	2	90216-
13		714-12-39230	• Seal Ring, (Kit : K04, K05)	3	90216-
14		714-12-39230	• Seal Ring, (Kit : K04, K05)	3	90216-
15		419-15-12122	• Ring, (Kit : K04, K05)	3	90216-
16		714-07-43211	• Gear	1	90216-
17		714-07-49610	• Bearing	1	90216-
18		714-07-49670	• Plate	1	90216-
19		234-15-23280	• Holder	1	90216-
20		01011-61615	• Bolt	1	90216-
21		01643-31645	• Washer	1	90216-
22		714-07-46320	• Spacer	1	90216-
23		04071-00150	• Ring, Snap	1	90216-
24		714-07-43223	• Gear	1	90216-
25		714-07-43323	• Shaft	1	90216-
26		714-07-46310	• Plate	1	90216-
27		04065-04518	• Ring, Snap	1	90216-
28		714-12-39360	• Bearing	1	90216-
29		714-07-49661	• Bearing	1	90216-

FIG. F4400-003001 Front Axle (Final Drive L.H.)

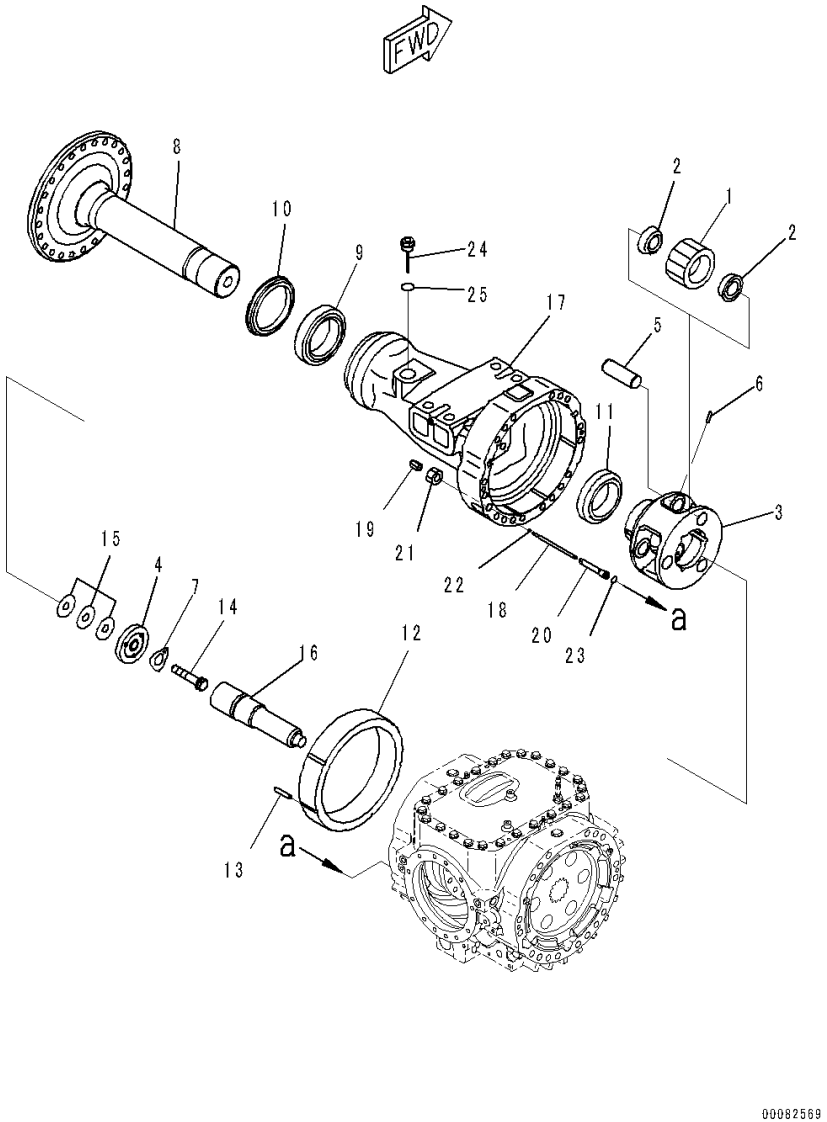

Index	Code	Part Number	Description	Qty	Serial Number
		Note: This list covers following specifications.			
		With Limited Slip Differential			
		With Limited Slip Differential, Brake Oil Cooling System			
		Without Limited Slip Differential			
		With Brake Oil Cooling System, Without Limited Slip Differential			
		421-22-30083	Axle Assembly, Front ..... With Limited Slip Differential	1	91086-
		421-22-30083	Axle Assembly, Front ..... With Limited Slip Differential, Brake Oil Cooling System	1	91086-
		421-22-30033	Axle Assembly, Front ..... Without Limited Slip Differential	1	91086-
		421-22-30033	Axle Assembly, Front ..... With Brake Oil Cooling System, Without Limited Slip Differential	1	91086-
		421-22-32061	• Final Drive Assembly, L.H.	1	90216-
1		421-22-32530	• • Gear	3	90216-
2		421-22-32810	• • Bearing	6	90216-
3		421-22-32630	• • Carrier	1	90216-
4		421-22-32330	• • Washer	1	90216-
5		421-22-32511	• • Shaft	3	90216-
6		421-22-32570	• • Pin	3	90216-
7		421-22-32550	• • Washer	1	90216-
8		421-22-32431	• • Shaft	1	90216-
9		421-22-32850	• • Bearing	1	90216-
10		421-22-32460	• • Seal	1	90216-
11		421-22-32870	• • Bearing	1	90216-
12		421-22-32543	• • Gear, Ring	1	90216-
13		419-22-12581	• • Pin, Dowel	6	90216-
14		421-22-32250	• • Bolt	1	90216-
15		421-22-32470	• • Shim, T=0.05mm	3	90216-
		421-22-32480	• • Shim, T=0.2mm	2	90216-
		421-22-32490	• • Shim, T=0.5mm	3	90216-
16		421-22-32781	• • Shaft	1	90216-
17		421-22-33520	• • Housing, L.H.	1	90216-
18		421-33-31810	• • Shaft	1	90216-
19		421-33-31730	• • Cap	1	90216-
20		421-33-31721	• • Guide	1	90216-
21		01583-11610	• • Nut	1	90216-

FIG. F4400-003001 Front Axle (Final Drive L.H.)

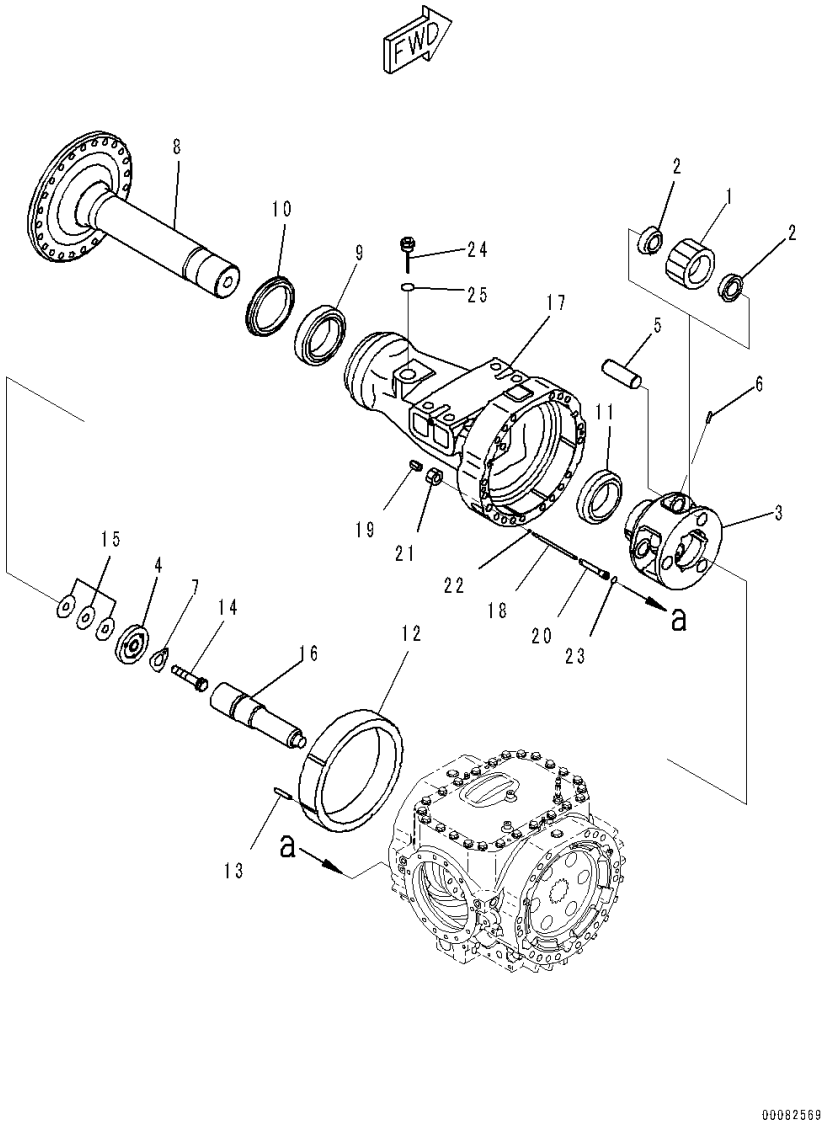

Index	Code	Part Number	Description	Qty	Serial Number
22		07000-11005	• • O-ring	1	90216-
23		07000-12018	• • O-ring	1	90216-
24		424-22-33250	• • Plug	1	90216-
25		07002-13634	• • O-ring	1	90216-

FIG. F4400-003002 Front Axle (Final Drive R.H.)

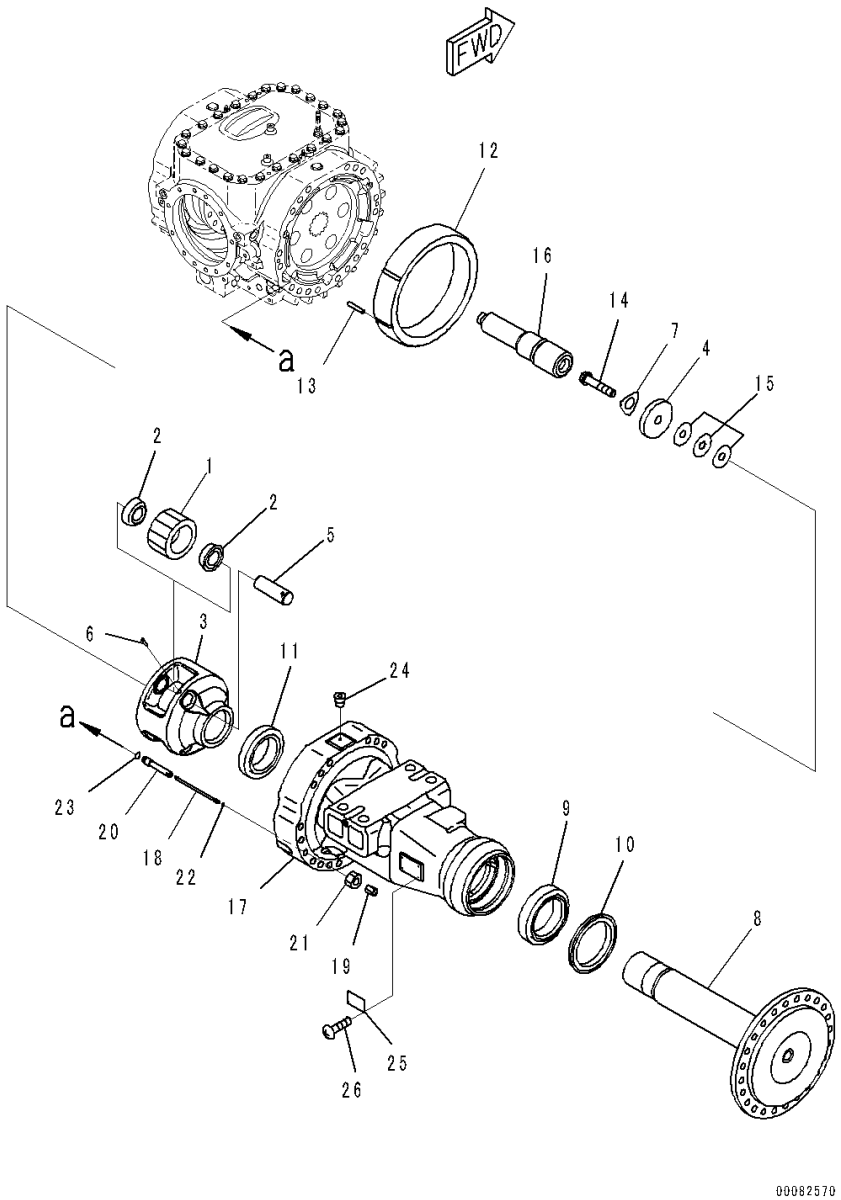

Index	Code	Part Number	Description	Qty	Serial Number
		Note: This list covers following specifications.			
		With Limited Slip Differential			
		With Limited Slip Differential, Brake Oil Cooling System			
		Without Limited Slip Differential			
		With Brake Oil Cooling System, Without Limited Slip Differential			
		421-22-30083	Axle Assembly, Front ..... With Limited Slip Differential	1	91086-
		421-22-30083	Axle Assembly, Front ..... With Limited Slip Differential, Brake Oil Cooling System	1	91086-
		421-22-30033	Axle Assembly, Front ..... Without Limited Slip Differential	1	91086-
		421-22-30033	Axle Assembly, Front ..... With Brake Oil Cooling System, Without Limited Slip Differential	1	91086-
		421-22-32071	• Final Drive Assembly, R.H.	1	90216-
1		421-22-32530	• • Gear	3	90216-
2		421-22-32810	• • Bearing	6	90216-
3		421-22-32630	• • Carrier	1	90216-
4		421-22-32330	• • Washer	1	90216-
5		421-22-32511	• • Shaft	3	90216-
6		421-22-32570	• • Pin	3	90216-
7		421-22-32550	• • Washer, Axle	1	90216-
8		421-22-32431	• • Shaft	1	90216-
9		421-22-32850	• • Bearing	1	90216-
10		421-22-32460	• • Seal	1	90216-
11		421-22-32870	• • Bearing	1	90216-
12		421-22-32543	• • Gear, Ring	1	90216-
13		419-22-12581	• • Pin, Dowel	6	90216-
14		421-22-32250	• • Bolt	1	90216-
15		421-22-32470	• • Shim, T=0.05mm	3	90216-
		421-22-32480	• • Shim, T=0.2mm	2	90216-
		421-22-32490	• • Shim, T=0.5mm	3	90216-
16		421-22-32781	• • Shaft, R.H.	1	90216-
17		421-22-33510	• • Housing, R.H.	1	90216-
18		421-33-31810	• • Shaft	1	90216-
19		421-33-31730	• • Cap	1	90216-
20		421-33-31721	• • Guide	1	90216-
21		01583-11610	• • Nut	1	90216-

FIG. F4400-003002 Front Axle (Final Drive R.H.)

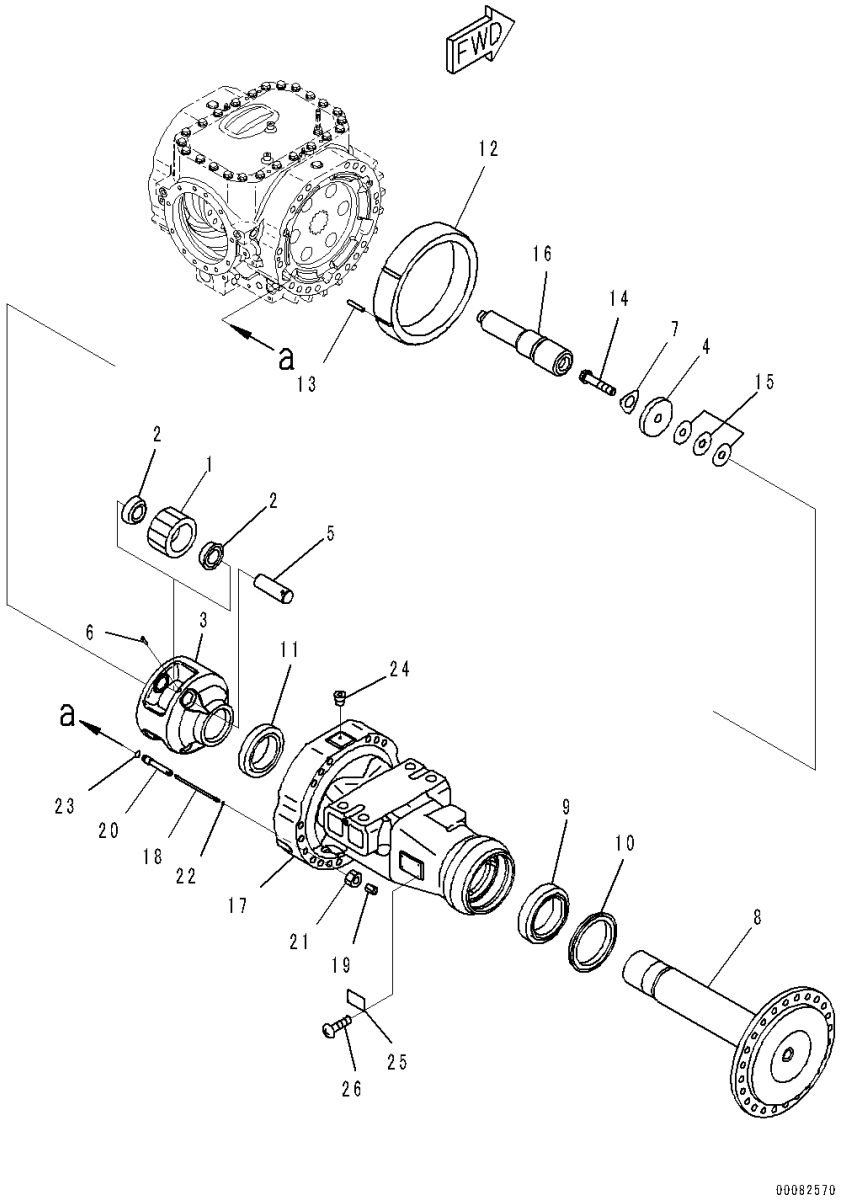

Index	Code	Part Number	Description	Qty	Serial Number
22		07000-11005	• • O-ring	1	90216-
23		07000-12018	• • O-ring	1	90216-
24		07043-70108	• • Plug	1	90216-
25	C2	815-02-10110	• Plate, Name (Limited Supply)	1	90216-
26		04418-13060	• Screw	4	90216-

FIG. F4400-003003A Front Axle (Differential) (1/3)

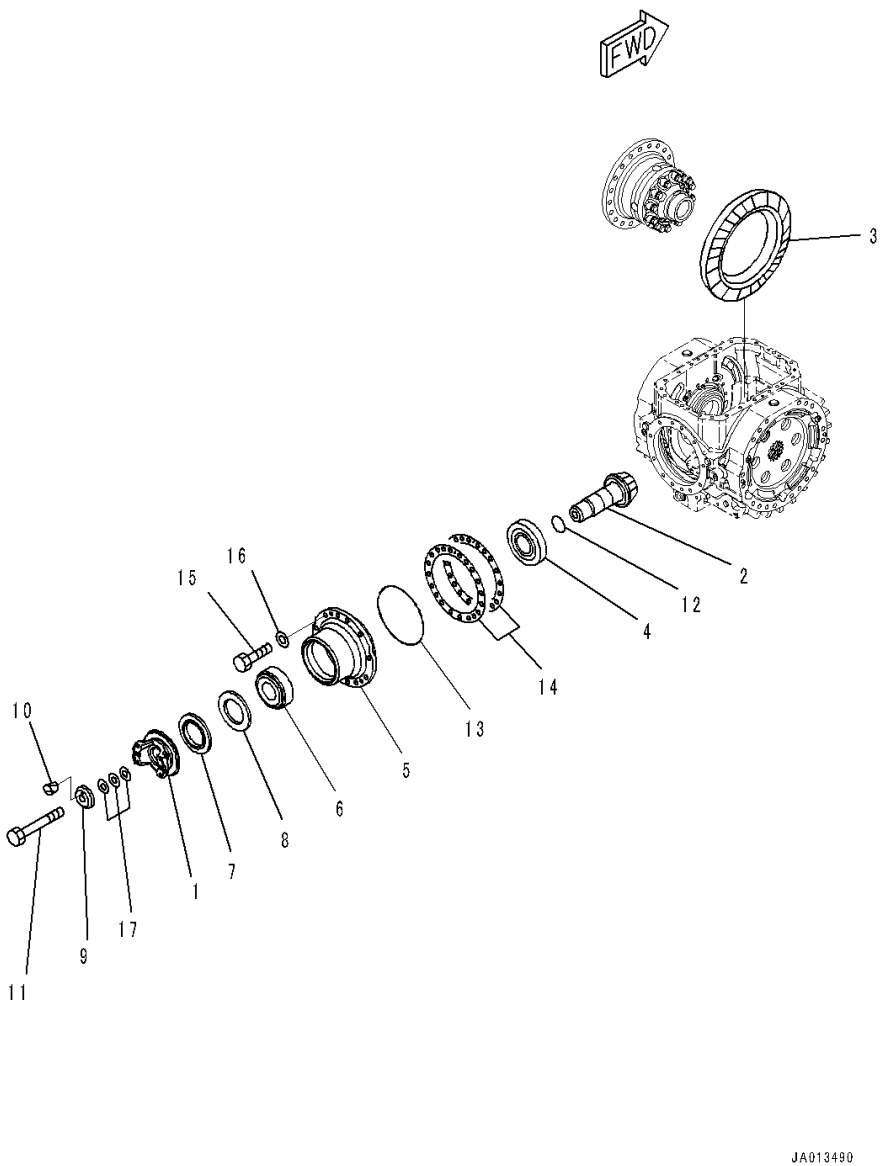

Index	Code	Part Number	Description	Qty	Serial Number
		Note: This list covers following specifications.			
		With Limited Slip Differential			
		With Limited Slip Differential, Brake Oil Cooling System			
		Without Limited Slip Differential			
		With Brake Oil Cooling System, Without Limited Slip Differential			
		421-22-30083	Axle Assembly, Front ..... With Limited Slip Differential	1	91086-
		421-22-30083	Axle Assembly, Front ..... With Limited Slip Differential, Brake Oil Cooling System	1	91086-
		421-22-30033	Axle Assembly, Front ..... Without Limited Slip Differential	1	91086-
		421-22-30033	Axle Assembly, Front ..... With Brake Oil Cooling System, Without Limited Slip Differential	1	91086-
		421-22-31086	• Differential Assembly ..... With Limited Slip Differential	1	91157-
		421-22-31086	• Differential Assembly ..... With Limited Slip Differential, Brake Oil Cooling System	1	91157-
		421-22-31045	• Differential Assembly ..... Without Limited Slip Differential	1	91157-
		421-22-31045	• Differential Assembly ..... With Brake Oil Cooling System, Without Limited Slip Differential	1	91157-
1		421-22-41220	• • Coupling Group	1	91086-
	C1		• • • Coupling	1	91086-
	C1		• • • Protector	1	91086-
		421-22-41200	• • Pinion and Gear Assembly	1	90216-
2	C1		• • • Pinion	1	90216-
3	C1		• • • Gear	1	90216-
4		421-22-41810	• • Bearing	1	91157-
5		421-22-31120	• • Cage	1	90216-
6		421-22-41820	• • Bearing	1	91157-
7		421-22-31761	• • Seal	1	90216-
8		421-22-31771	• • Seal	1	90216-
9		421-22-41240	• • Holder	1	91086-
10		07049-01012	• • Plug	1	91086-
11		01011-62420	• • Bolt	1	90216-

FIG. F4400-003003A Front Axle (Differential) (1/3)

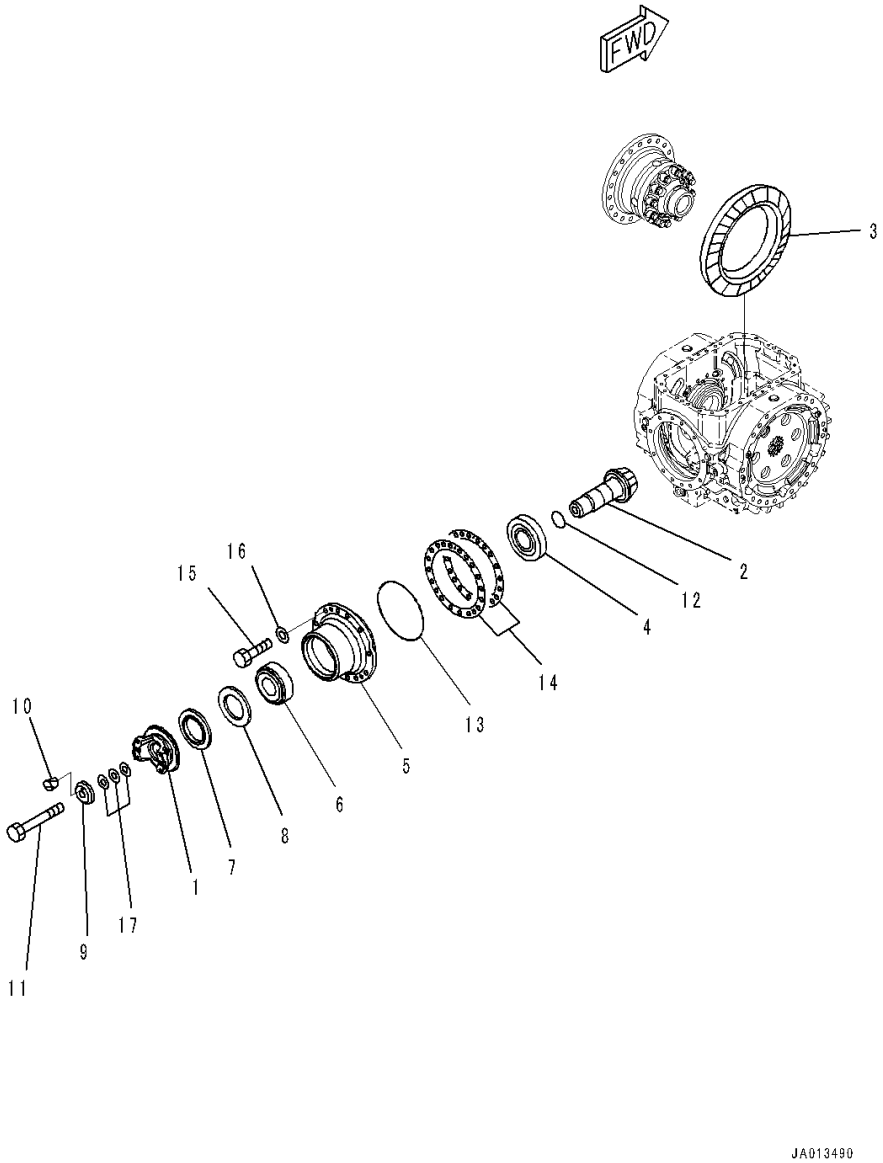

Index	Code	Part Number	Description	Qty	Serial Number
12		07000-15060	• • O-ring	1	90216-
13		07000-15240	• • O-ring	1	90216-
14		421-22-31261	• • Shim, T=0.05mm	2	90216-
		421-22-31271	• • Shim, T=0.2mm	2	90216-
		421-22-31281	• • Shim, T=0.3mm	2	90216-
		421-22-31291	• • Shim, T=0.8mm	1	90216-
15		01010-61650	• • Bolt	12	90216-
16		01643-31645	• • Washer	12	90216-
17		421-22-41970	• • Shim, T=0.15mm	3	91086-
		421-22-41980	• • Shim, T=0.2mm	4	91086-
		421-22-41990	• • Shim, T=0.5mm	2	91086-
		421-22-41960	• • Shim, T=0.18mm	4	91086-

FIG. F4400-003004 Front Axle (Differential) (2/3)

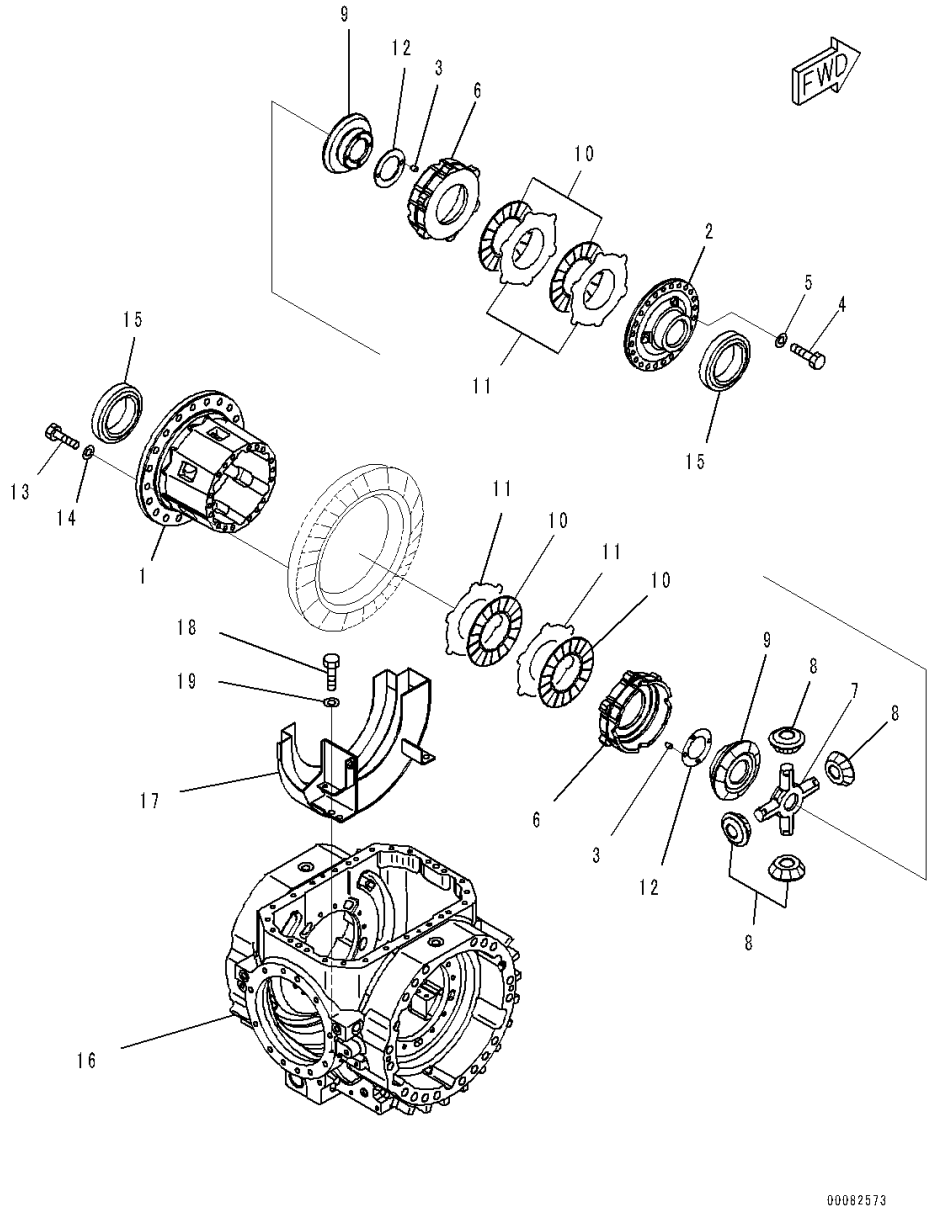

Index	Code	Part Number	Description	Qty	Serial Number
		Note: This list covers following specifications.			
		With Limited Slip Differential			
		With Limited Slip Differential, Brake Oil Cooling System			
		421-22-30083	Axle Assembly, Front	1	91086-
		421-22-31086	• Differential Assembly	1	91157-
		421-22-37700	• • Differential Assembly	1	90216-
1		421-22-37660	• • • Case	1	90216-
2		421-22-37720	• • • Cover	1	90216-
3		175-21-12180	• • • Pin	4	90216-
4		01010-61240	• • • Bolt	18	90216-
5		01643-31232	• • • Washer	18	90216-
6		421-22-37760	• • • Ring, Pressure	2	90216-
7		421-22-37220	• • • Shaft	1	90216-
8		421-22-37310	• • • Pinion	4	90216-
9		421-22-37320	• • • Gear	2	90216-
10		421-22-37410	• • • Disc	4	90216-
11		421-22-37450	• • • Plate	4	90216-
		421-22-37460	• • • Plate	4	90216-
12		421-22-37371	• • • Washer	2	90216-
		421-22-37381	• • • Washer	2	90216-
13		01010-61645	• • Bolt	20	90216-
14		01643-31645	• • Washer	20	90216-
15		421-22-41860	• • Bearing	2	90799-
16		421-22-33811	• • Housing	1	90216-
17		421-22-31832	• • Cover, Gear	1	90216-
18		01010-61225	• • Bolt	4	90216-
19		01643-31232	• • Washer	4	90216-

FIG. F4400-003005 Front Axle (Differential) (3/3)

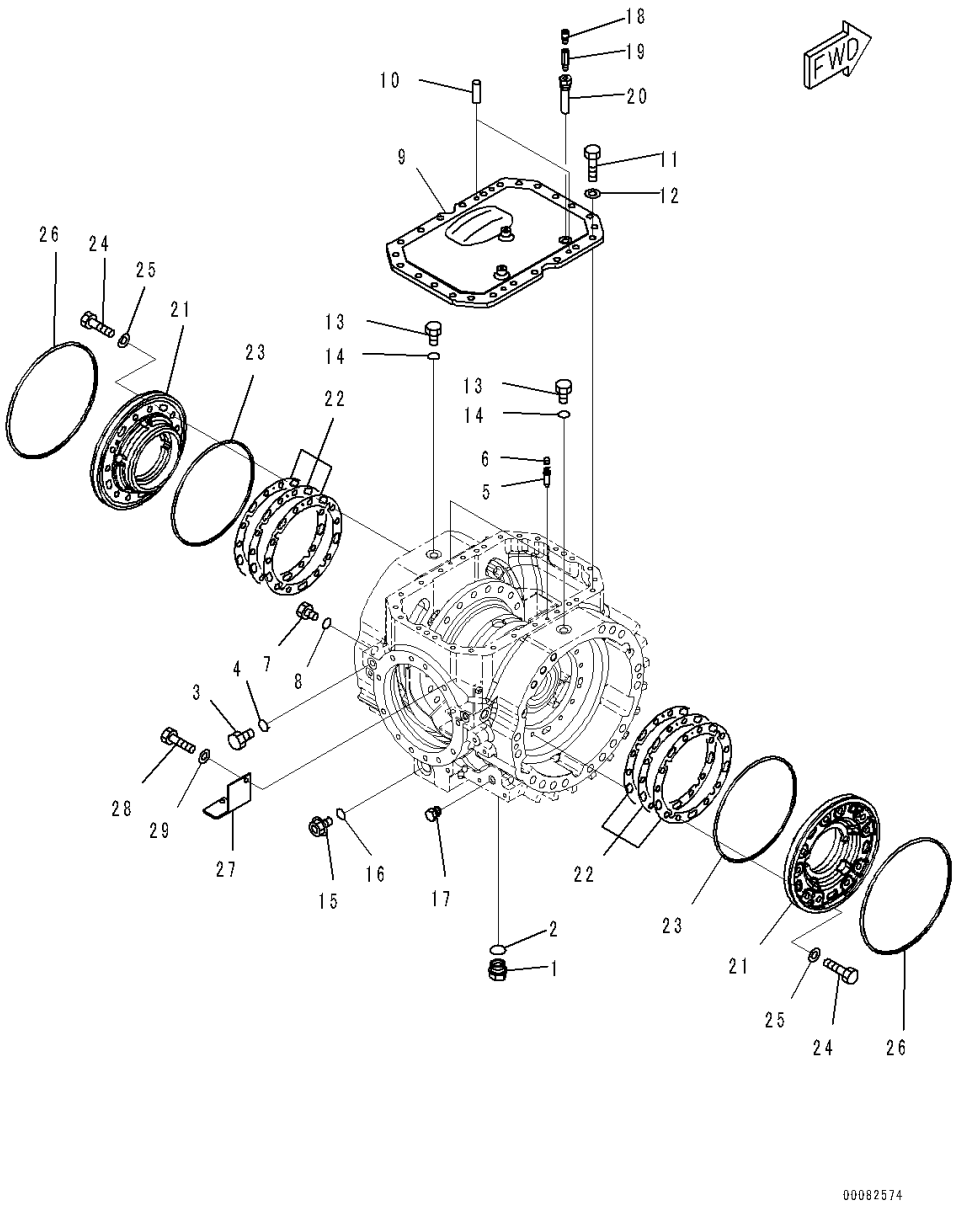

Index	Code	Part Number	Description	Qty	Serial Number
		Note: This list covers following specifications.			
		With Limited Slip Differential			
		With Limited Slip Differential, Brake Oil Cooling System			
		Without Limited Slip Differential			
		With Brake Oil Cooling System, Without Limited Slip Differential			
		421-22-30083	Axle Assembly, Front ..... With Limited Slip Differential	1	91086-
		421-22-30083	Axle Assembly, Front ..... With Limited Slip Differential, Brake Oil Cooling System	1	91086-
		421-22-30033	Axle Assembly, Front ..... Without Limited Slip Differential	1	91086-
		421-22-30033	Axle Assembly, Front ..... With Brake Oil Cooling System, Without Limited Slip Differential	1	91086-
		421-22-31086	• Differential Assembly ..... With Limited Slip Differential	1	91157-
		421-22-31086	• Differential Assembly ..... With Limited Slip Differential, Brake Oil Cooling System	1	91157-
		421-22-31045	• Differential Assembly ..... Without Limited Slip Differential	1	91157-
		421-22-31045	• Differential Assembly ..... With Brake Oil Cooling System, Without Limited Slip Differential	1	91157-
1		07044-13620	• • Plug	1	90216-
2		07002-13634	• • O-ring	1	90216-
3		07040-11409	• • Plug	2	90216-
4		07002-61423	• • O-ring	2	90216-
5		419-33-11460	• • Bleeder	2	90216-
6		566-32-11620	• • Cap	2	90216-
7		07040-12012	• • Plug	2	90216-
8		07002-12034	• • O-ring	2	90216-
9		421-22-33930	• • Cover	1	90216-
10		04020-01228	• • Pin, Dowel	2	90216-
11		01010-61440	• • Bolt	24	90216-
12		01643-31445	• • Washer, Flat	24	90216-
13		07040-11812	• • Plug	2	90216-
14		07002-11823	• • O-ring	2	90216-

FIG. F4400-003005 Front Axle (Differential) (3/3)

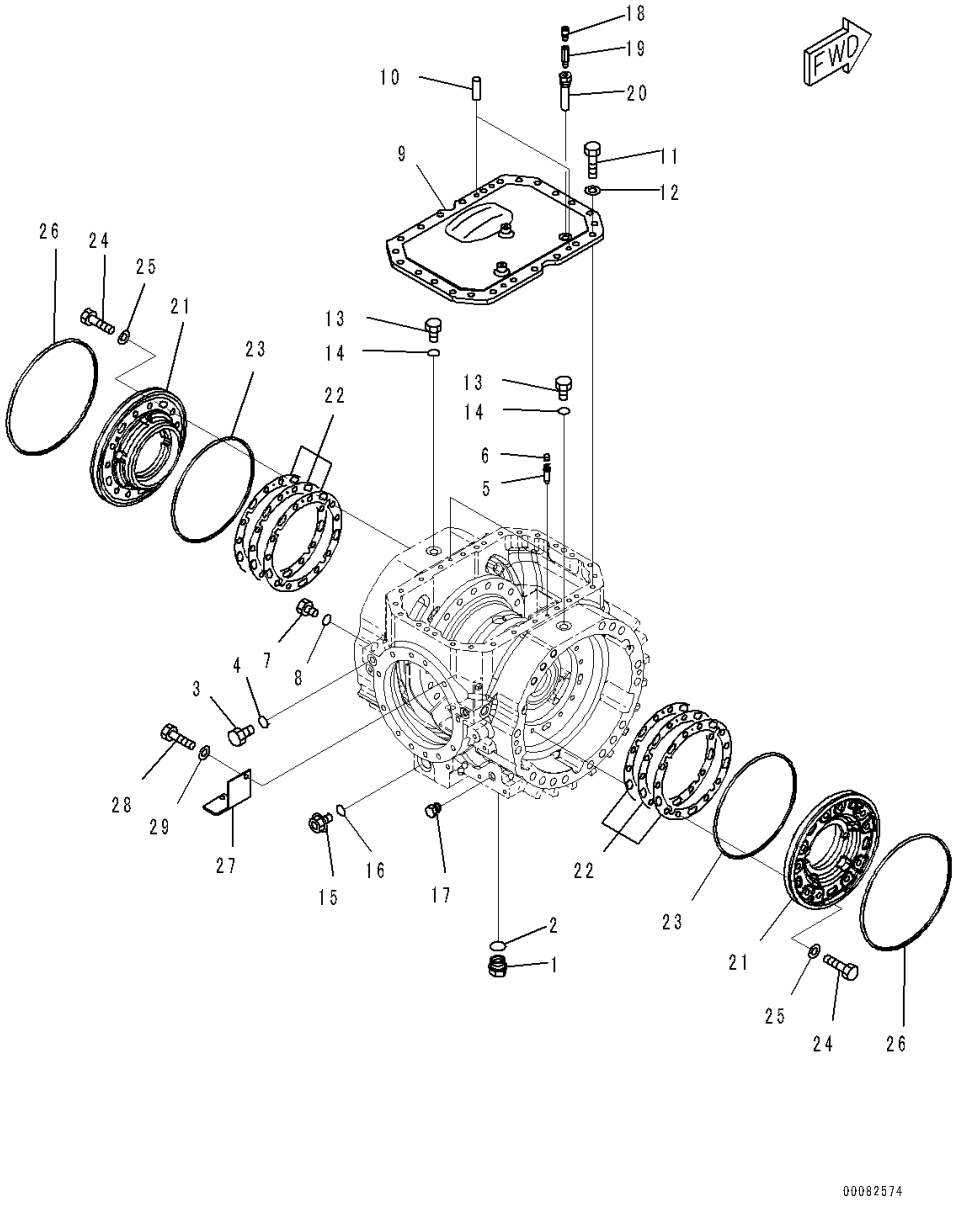

Index	Code	Part Number	Description	Qty	Serial Number
15		07041-13612	• • Plug	1	90216-
16		07002-13634	• • O-ring	1	90216-
17		287-35-11470	• • Plug	1	90216-
18		07030-01030	• • Breather	1	90216-
19		6141-55-5630	• • Nipple	1	90216-
20		419-22-33921	• • Connector	1	90216-
21		421-22-31180	• • Carrier	2	90216-
22		421-22-31361	• • Shim, T=0.05mm	6	90216-
		421-22-31371	• • Shim, T=0.2mm	4	90216-
		421-22-31381	• • Shim, T=0.3mm	4	90216-
		421-22-31391	• • Shim, T=0.8mm	2	90216-
23		421-33-31430	• • Ring	2	90216-
24		01010-61445	• • Bolt	20	90216-
25		01643-31445	• • Washer, Flat	20	90216-
26		423-33-21410	• • Seal	2	90216-
27		421-22-33230	• • Bracket	1	90216-
28		01010-61025	• • Bolt	2	90216-
29		01643-31032	• • Washer	2	90216-

FIG. F4400-003006 Front Axle (Brake)

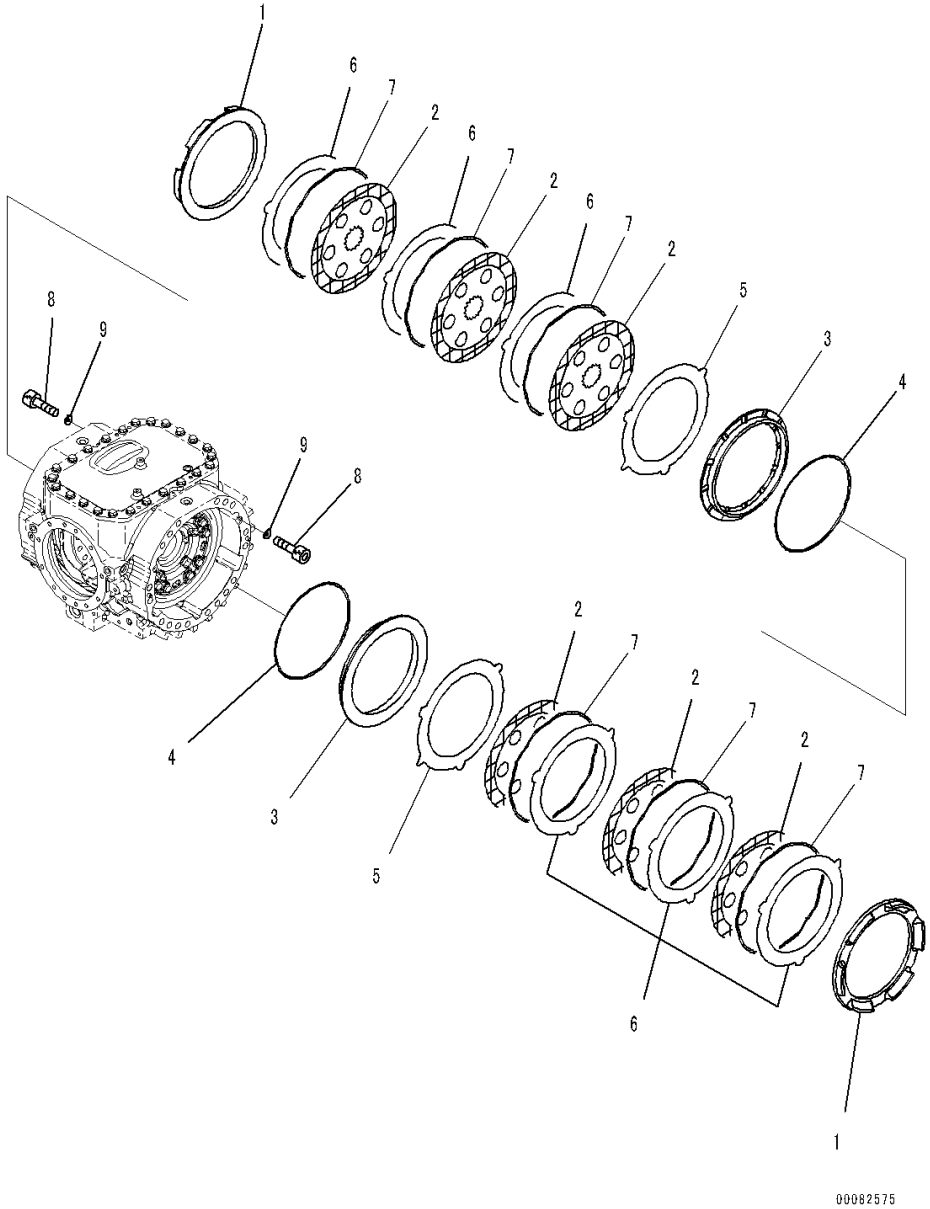

Index	Code	Part Number	Description	Qty	Serial Number
		Note: This list covers following specifications.			
		With Limited Slip Differential			
		With Limited Slip Differential, Brake Oil Cooling System			
		Without Limited Slip Differential			
		With Brake Oil Cooling System, Without Limited Slip Differential			
		421-22-30083	Axle Assembly, Front ..... With Limited Slip Differential	1	91086-
		421-22-30083	Axle Assembly, Front ..... With Limited Slip Differential, Brake Oil Cooling System	1	91086-
		421-22-30033	Axle Assembly, Front ..... Without Limited Slip Differential	1	91086-
		421-22-30033	Axle Assembly, Front ..... With Brake Oil Cooling System, Without Limited Slip Differential	1	91086-
1		421-33-31371	• Plate, Outer	2	90216-
2		421-33-31242	• Disc	6	90216-
3		421-33-31331	• Piston	2	90216-
4		421-33-31410	• Seal	2	90216-
5		421-33-31340	• Plate	2	90216-
6		421-33-31350	• Plate	6	90216-
7		421-33-31630	• Spring	6	90216-
8		01252-60816	• Bolt, Hexagon Socket Head	4	90216-
9		421-33-31451	• Plate	4	90216-

FIG. F4400-003007 Front Axle (Mounting) (1/2)

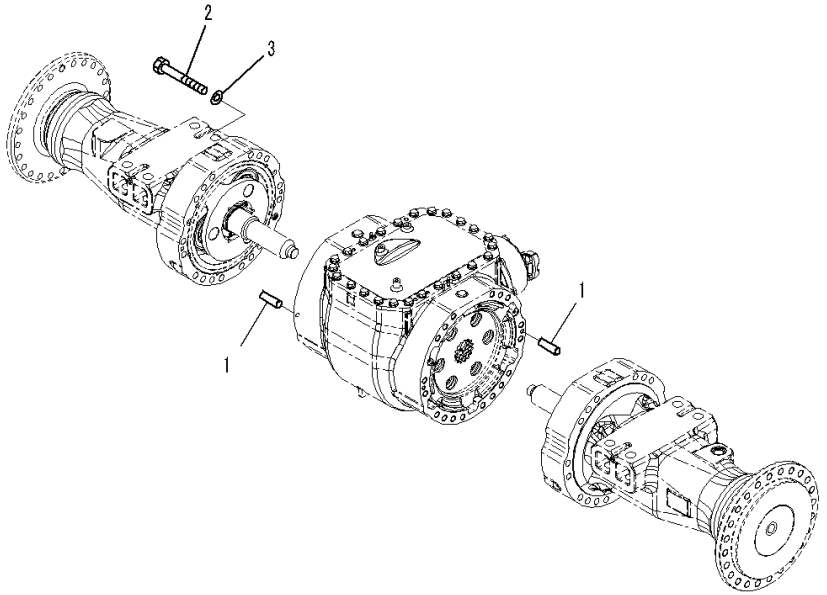

Index	Code	Part Number	Description	Qty	Serial Number
		Note: This list covers following specifications.			
		With Limited Slip Differential			
		With Limited Slip Differential, Brake Oil Cooling System			
		Without Limited Slip Differential			
		With Brake Oil Cooling System, Without Limited Slip Differential			
		421-22-30083	Axle Assembly, Front ..... With Limited Slip Differential	1	91086-
		421-22-30083	Axle Assembly, Front ..... With Limited Slip Differential, Brake Oil Cooling System	1	91086-
		421-22-30033	Axle Assembly, Front ..... Without Limited Slip Differential	1	91086-
		421-22-30033	Axle Assembly, Front ..... With Brake Oil Cooling System, Without Limited Slip Differential	1	91086-
1		04020-01228	• Pin, Dowel	4	90216-
2		01011-62035	• Bolt	36	90216-
3		01643-32060	• Washer	36	90216-

FIG. F4400-003008 Front Axle (Mounting) (2/2)

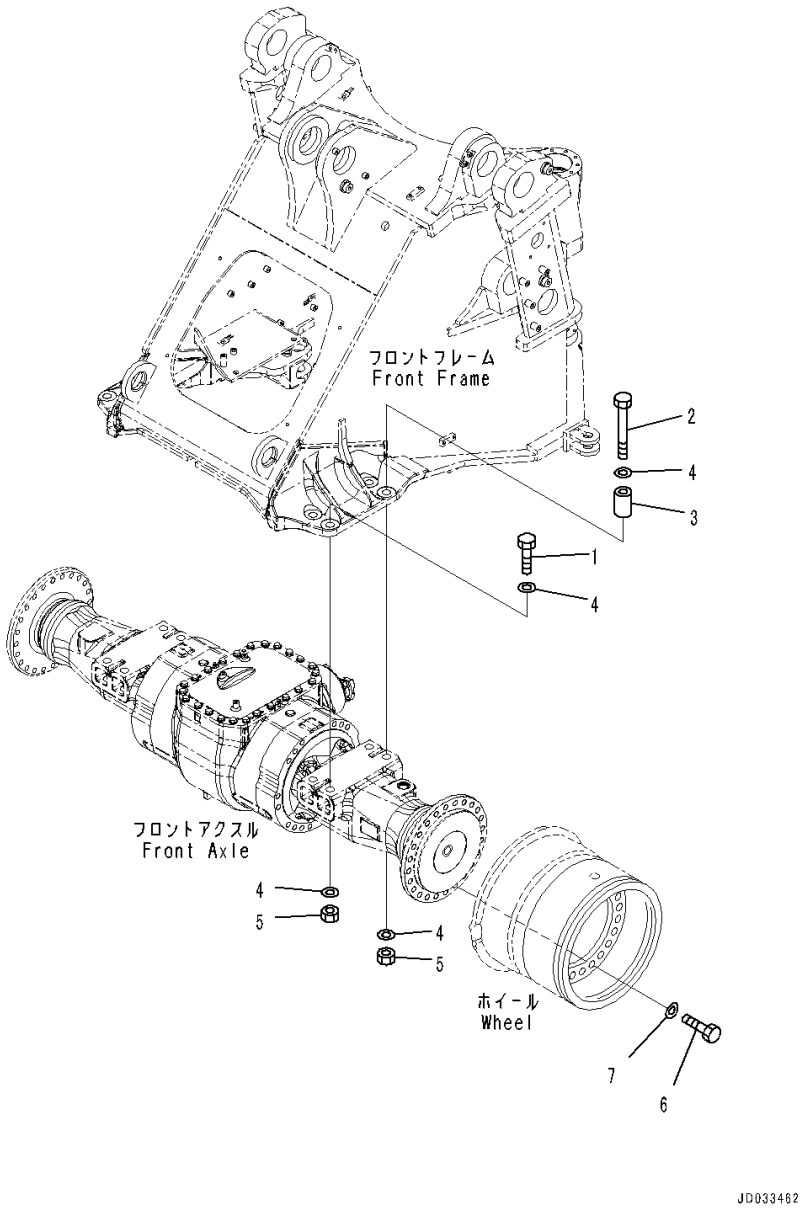

Index	Code	Part Number	Description	Qty	Serial Number
		Note: This list covers following specifications.			
		With Limited Slip Differential			
		With Limited Slip Differential, Brake Oil Cooling System			
		Without Limited Slip Differential			
		With Brake Oil Cooling System, Without Limited Slip Differential			
1		421-09-12240	Bolt	4	90216-
2		425-974-1161	Bolt	4	90216-
3		421-09-42250	Spacer	4	90216-
4		01643-33080	Washer	16	90216-
5		01580-03024	Nut	8	90216-
6		419-22-12870	Bolt	48	90216-
7		01643-32460	Washer	48	90216-

FIG. F4400-006009 Front Axle (Piping)

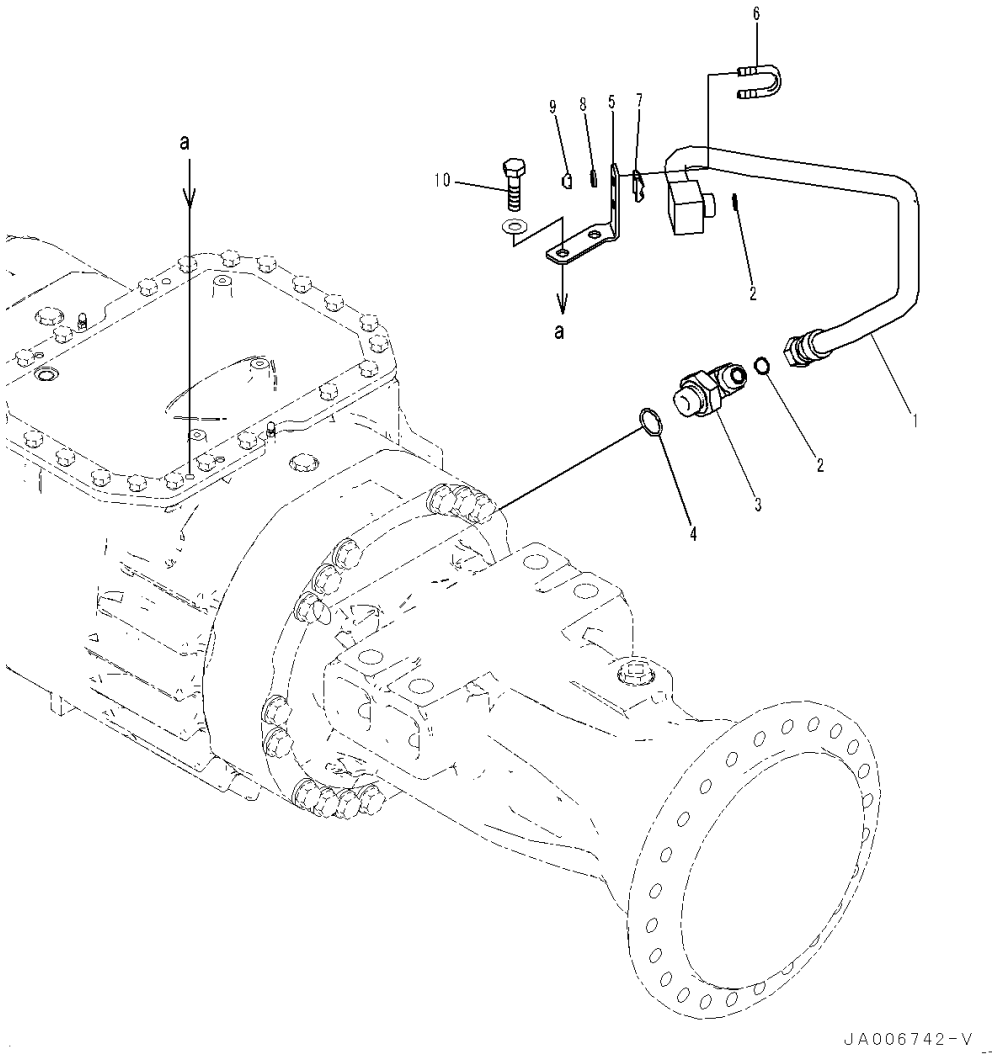

Index	Code	Part Number	Description	Qty	Serial Number
		Note: This list covers following specifications. With Limited Slip Differential, Brake Oil Cooling System With Brake Oil Cooling System, Without Limited Slip Differential			
1		421-U45-4170	Tube	1	90216-
2		02896-21018	O-ring	2	90216-
3		421-U44-3830	Elbow	1	90216-
4		07002-23634	O-ring	1	90216-
5		421-U44-4940	Plate	1	90216-
6		07283-32738	Clip, Pipe	1	90216-
7		07283-52737	Seat	1	90216-
8		01643-31032	Washer	2	90216-
9		01597-01009	Nut	2	90216-
10		01010-61445	Bolt	2	90216-

FIG. F4400-004004 Front Axle (Differential) (2/3)

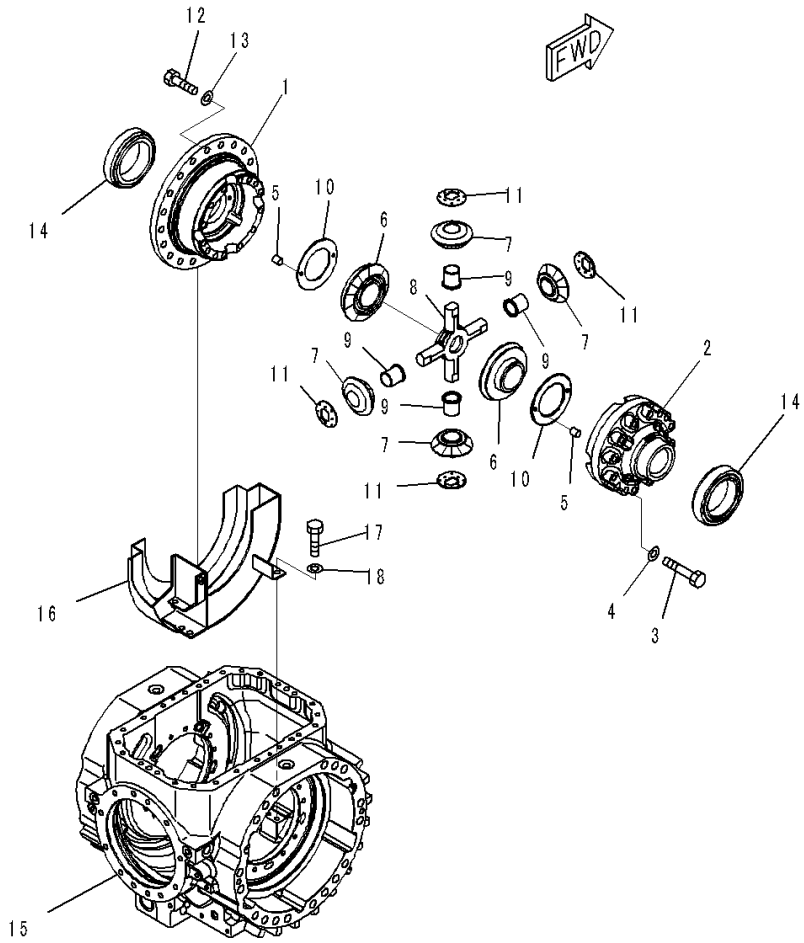

Index	Code	Part Number	Description	Qty	Serial Number
		Note: This list covers following specifications. Without Limited Slip Differential With Brake Oil Cooling System, Without Limited Slip Differential			
		421-22-30033	Axle Assembly, Front	1	91086-
		421-22-31045	• Differential Assembly	1	91157-
		421-22-31600	• • Case Assembly	1	90216-
1	C1		• • • Case, Flange	1	90216-
2	C1		• • • Case, Plane	1	90216-
3		01011-61425	• • • Bolt	14	90216-
4		01643-31445	• • • Washer, Flat	14	90216-
5		175-21-12180	• • • Pin	4	90216-
6		421-22-31530	• • Gear	2	90216-
7		421-22-31540	• • Pinion	4	90216-
8		421-22-31410	• • Shaft	1	90216-
9		421-22-41570	• • Bushing	4	90724-
10		56B-22-11460	• • Washer	2	90216-
11		56B-22-11770	• • Washer	4	90724-
12		01010-61645	• • Bolt	20	90216-
13		01643-31645	• • Washer	20	90216-
14		421-22-41860	• • Bearing	2	90799-
15		421-22-33811	• • Housing, Gear	1	90216-
16		421-22-31832	• • Cover	1	90216-
17		01010-61225	• • Bolt	4	90216-
18		01643-31232	• • Washer	4	90216-

FIG. F4500-003002 Rear Axle (Final Drive R.H.)

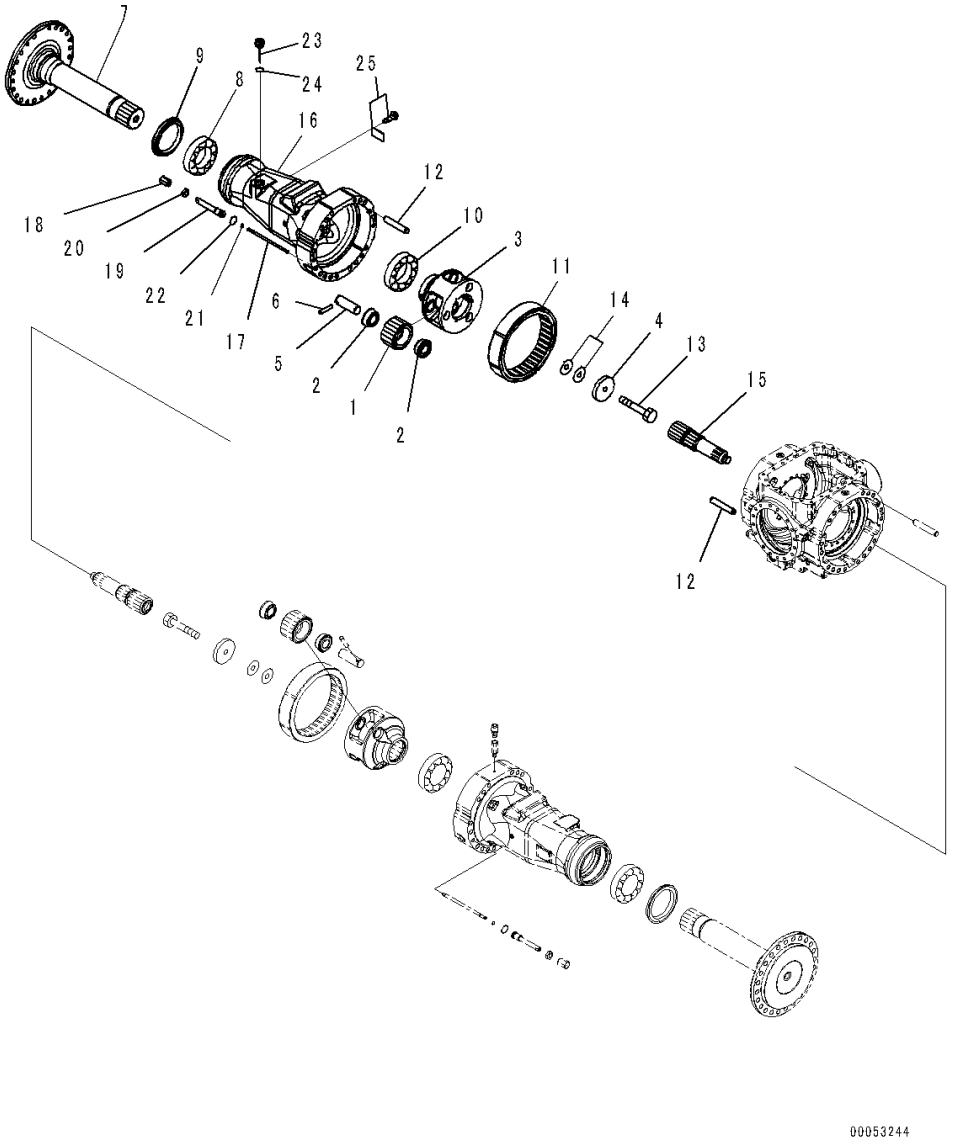

Index	Code	Part Number	Description	Qty	Serial Number
		Note: This list covers following specifications.			
		With Limited Slip Differential			
		With Limited Slip Differential, Brake Oil Cooling System			
		Without Limited Slip Differential			
		With Brake Oil Cooling System, Without Limited Slip Differential			
		421-23-30083	Axle Assembly, Rear ..... With Limited Slip Differential	1	91086-
		421-23-30083	Axle Assembly, Rear ..... With Limited Slip Differential, Brake Oil Cooling System	1	91086-
		421-23-30034	Axle Assembly, Rear ..... Without Limited Slip Differential	1	91086-
		421-23-30034	Axle Assembly, Rear ..... With Brake Oil Cooling System, Without Limited Slip Differential	1	91086-
		421-23-32030	• Final Drive Assembly	1	90216-
1		421-23-32530	• • Gear	3	90216-
2		421-23-32810	• • Bearing	6	90216-
3		421-23-32630	• • Carrier	1	90216-
4		421-23-32352	• • Washer	1	90216-
5		421-23-32511	• • Shaft	3	90216-
6		421-22-32570	• • Pin	3	90216-
7		421-23-32431	• • Shaft	1	90216-
8		421-22-32850	• • Bearing	1	90216-
9		421-22-32460	• • Seal	1	90216-
10		421-22-41860	• • Bearing	1	90799-
11		421-23-32543	• • Gear	1	90216-
12		419-22-12581	• • Pin, Dowel	4	90216-
13		01011-62210	• • Bolt	1	90216-
14		421-23-32470	• • Shim, T=0.05mm	3	90216-
		421-23-32480	• • Shim, T=0.2mm	2	90216-
		421-23-32490	• • Shim, T=0.5mm	3	90216-
15		421-23-32421	• • Shaft	1	90216-
16		421-23-33520	• • Housing	1	90216-
17		421-33-31711	• • Shaft	1	90216-
18		421-33-31730	• • Cap	1	90216-
19		421-33-31721	• • Guide	1	90216-
20		01583-11610	• • Nut	1	90216-
21		07000-11005	• • O-ring	1	90216-

FIG. F4500-003002 Rear Axle (Final Drive R.H.)

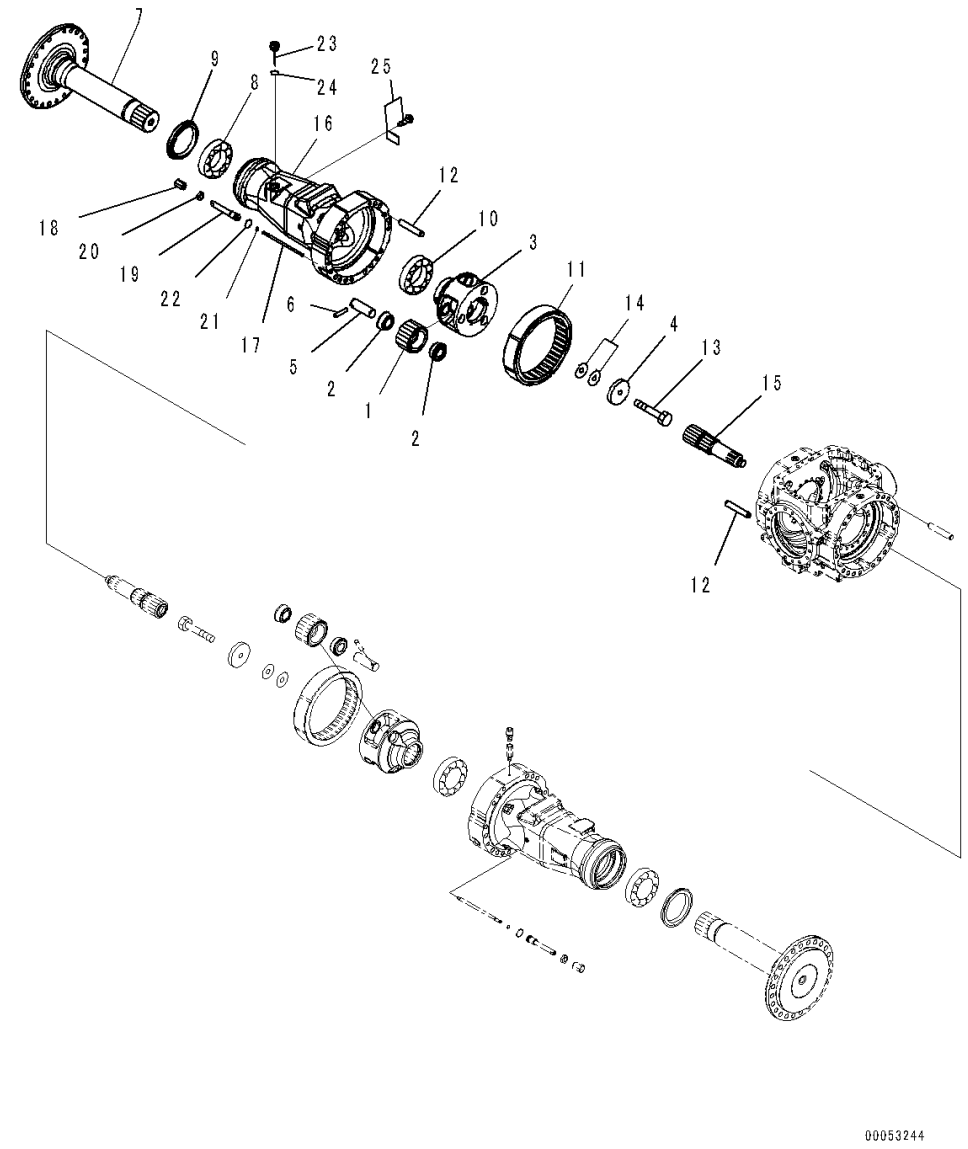

Index	Code	Part Number	Description	Qty	Serial Number
22		07000-12018	• • O-ring	1	90216-
23		424-22-33250	• • Plug	1	90216-
24		07002-13634	• • O-ring	1	90216-
25	C2	815-02-10110	• Plate, Name (Limited Supply)	1	90216-
		04418-13060	• Screw	4	90216-

FIG. F4500-003003A Rear Axle (Differential) (1/3)

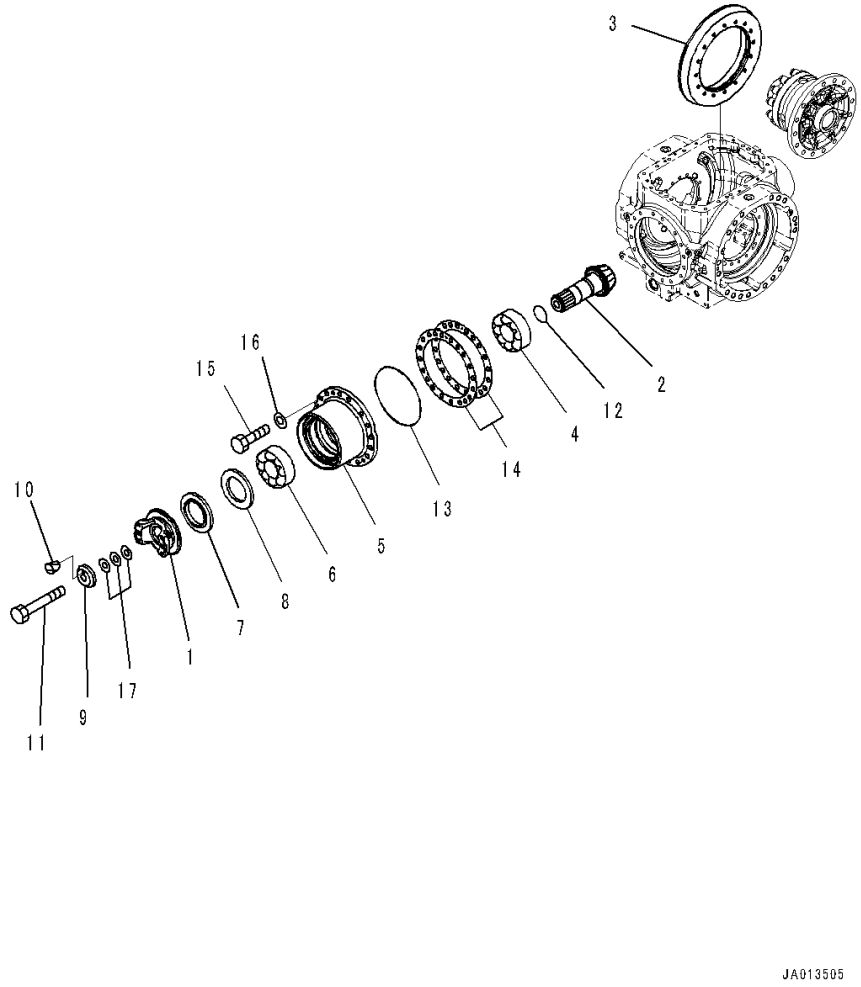

Index	Code	Part Number	Description	Qty	Serial Number
		Note: This list covers following specifications.			
		With Limited Slip Differential			
		With Limited Slip Differential, Brake Oil Cooling System			
		Without Limited Slip Differential			
		With Brake Oil Cooling System, Without Limited Slip Differential			
		421-23-30083	Axle Assembly, Rear ..... With Limited Slip Differential	1	91086-
		421-23-30083	Axle Assembly, Rear ..... With Limited Slip Differential, Brake Oil Cooling System	1	91086-
		421-23-30034	Axle Assembly, Rear ..... Without Limited Slip Differential	1	91086-
		421-23-30034	Axle Assembly, Rear ..... With Brake Oil Cooling System, Without Limited Slip Differential	1	91086-
		421-23-31095	• Differential Assembly ..... With Limited Slip Differential	1	91108-
		421-23-31095	• Differential Assembly ..... With Limited Slip Differential, Brake Oil Cooling System	1	91108-
		421-23-32044	• Differential Assembly ..... Without Limited Slip Differential	1	91108-
		421-23-32044	• Differential Assembly ..... With Brake Oil Cooling System, Without Limited Slip Differential	1	91108-
1		421-22-41220	• • Coupling Group	1	91086-
	C1		• • • Coupling	1	91086-
	C1		• • • Protector	1	91086-
		424-22-31200	• • Pinion and Gear Assembly	1	90216-
2	C1		• • • Pinion	1	90216-
3	C1		• • • Gear	1	90216-
4		421-23-41810	• • Bearing	1	91108-
5		421-23-31170	• • Cage	1	90216-
6		421-23-41820	• • Bearing	1	91108-
7		421-22-31761	• • Seal	1	90216-
8		421-22-31771	• • Seal	1	90216-
9		421-22-41240	• • Holder	1	91086-
10		07049-01012	• • Plug	1	91086-
11		01011-62420	• • Bolt	1	90216-

FIG. F4500-003003A Rear Axle (Differential) (1/3)

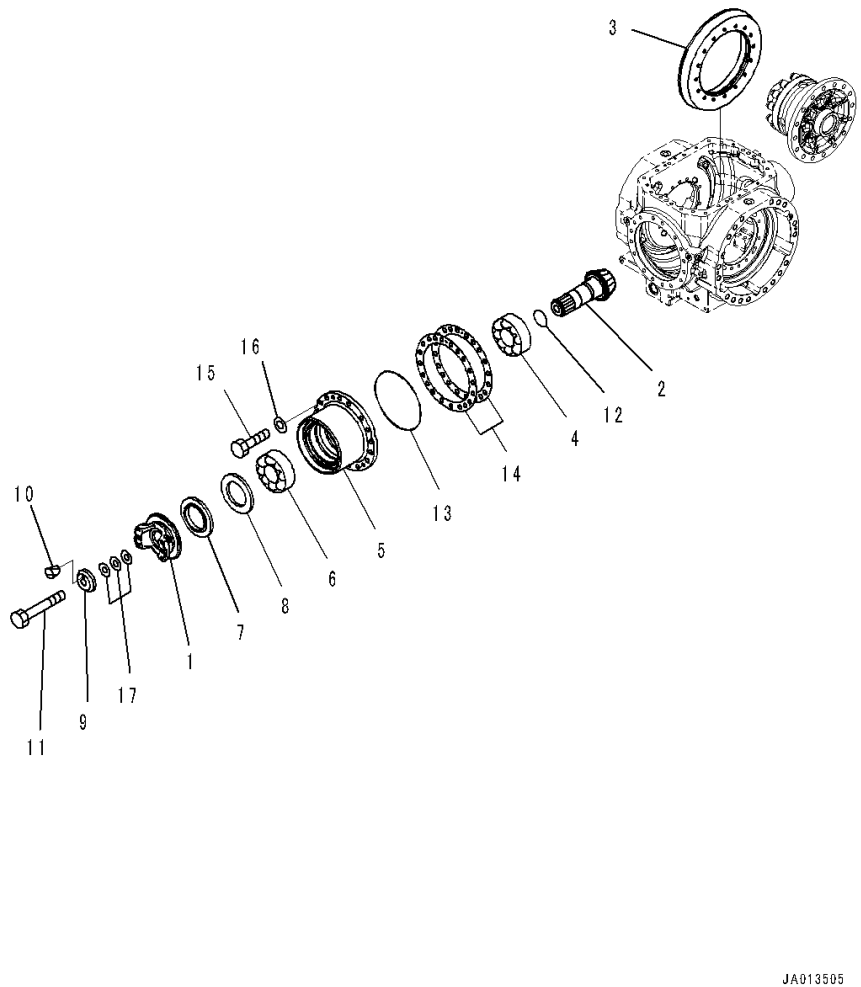

Index	Code	Part Number	Description	Qty	Serial Number
12		07000-15060	• • O-ring	1	90216-
13		07000-15240	• • O-ring	1	90216-
14		421-22-31261	• • Shim, T=0.05mm	2	90216-
		421-22-31271	• • Shim, T=0.2mm	2	90216-
		421-22-31281	• • Shim, T=0.3mm	2	90216-
		421-22-31291	• • Shim, T=0.8mm	1	90216-
15		01010-61650	• • Bolt	16	90216-
16		01643-31645	• • Washer	16	90216-
17		421-22-41970	• • Shim, T=0.15mm	3	91086-
		421-22-41980	• • Shim, T=0.2mm	4	91086-
		421-22-41990	• • Shim, T=0.5mm	2	91086-
		421-22-41960	• • Shim, T=0.18mm	4	91086-

FIG. F4500-003004 Rear Axle (Differential) (2/3)

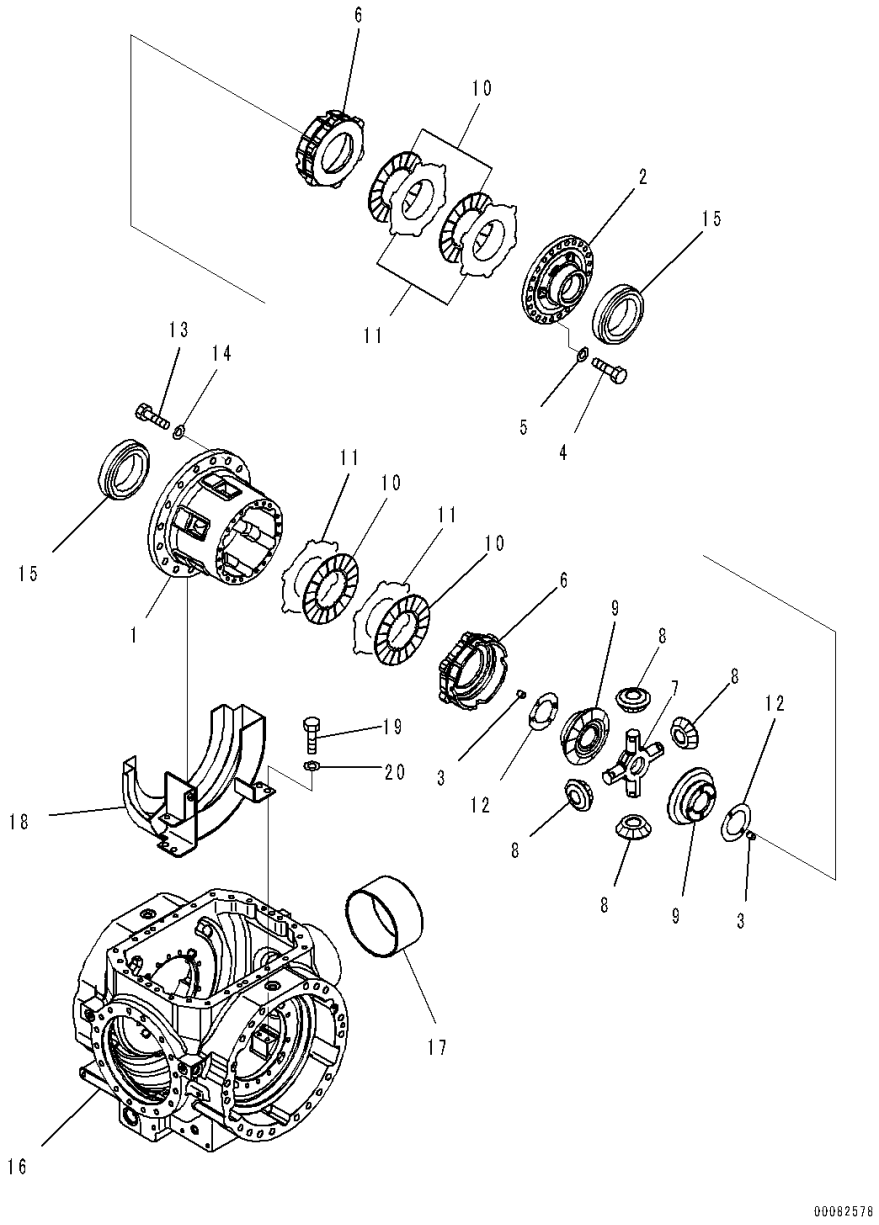

Index	Code	Part Number	Description	Qty	Serial Number
		Note: This list covers following specifications.			
		With Limited Slip Differential			
		With Limited Slip Differential, Brake Oil Cooling System			
		421-23-30083	Axle Assembly, Rear	1	91086-
		421-23-31095	• Differential Assembly	1	91108-
		423-22-37602	• • Differential Assembly	1	90216-
1		424-22-37110	• • • Case	1	90216-
2		424-22-37120	• • • Cover	1	90216-
3		175-21-12180	• • • Pin	4	90216-
4		01010-61240	• • • Bolt	18	90216-
5		01643-31232	• • • Washer	18	90216-
6		424-22-37210	• • • Ring, Pressure	2	90216-
7		424-22-37220	• • • Shaft	1	90216-
8		424-22-37310	• • • Pinion	4	90216-
9		424-22-27321	• • • Gear	2	90216-
10		424-22-37411	• • • Disk	4	90216-
11		424-22-37451	• • • Plate	4	90216-
		424-22-37461	• • • Plate	4	90216-
12		56B-22-17210	• • • Washer	2	90216-
		56B-22-17230	• • • Washer	2	90216-
13		01010-61645	• • Bolt	16	90216-
14		01643-31645	• • Washer	16	90216-
15		421-22-41860	• • Bearing	2	90799-
16		421-23-33870	• • Housing	1	91112-
17		421-23-33170	• • Sleeve	1	90216-
18		421-23-31832	• • Cover, Gear	1	90216-
19		01010-61225	• • Bolt	4	90216-
20		01643-31232	• • Washer	4	90216-

FIG. F4500-003005 Rear Axle (Differential) (3/3)

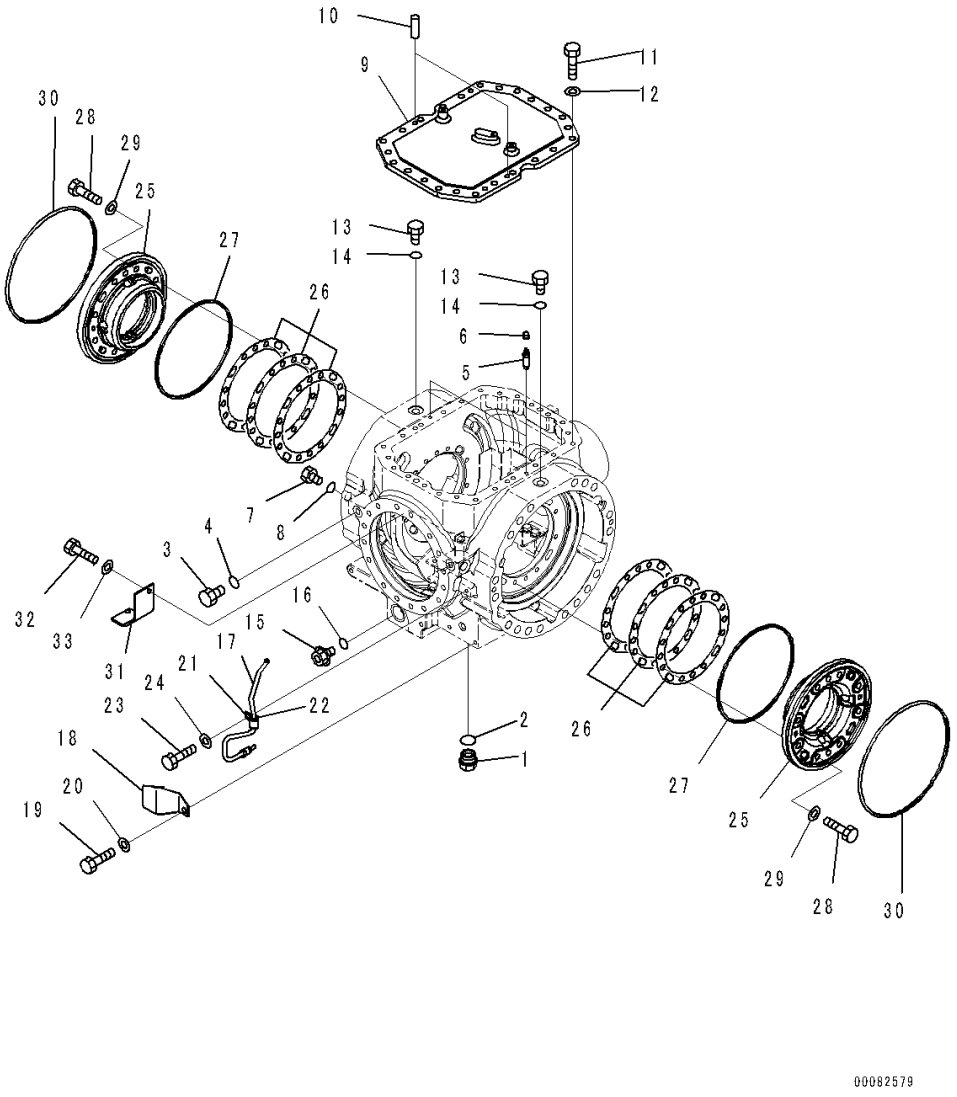

Index	Code	Part Number	Description	Qty	Serial Number
		Note: This list covers following specifications.			
		With Limited Slip Differential			
		With Limited Slip Differential, Brake Oil Cooling System			
		Without Limited Slip Differential			
		With Brake Oil Cooling System, Without Limited Slip Differential			
		421-23-30083	Axle Assembly, Rear ..... With Limited Slip Differential	1	91086-
		421-23-30083	Axle Assembly, Rear ..... With Limited Slip Differential, Brake Oil Cooling System	1	91086-
		421-23-30034	Axle Assembly, Rear ..... Without Limited Slip Differential	1	91086-
		421-23-30034	Axle Assembly, Rear ..... With Brake Oil Cooling System, Without Limited Slip Differential	1	91086-
		421-23-31095	• Differential Assembly ..... With Limited Slip Differential	1	91108-
		421-23-31095	• Differential Assembly ..... With Limited Slip Differential, Brake Oil Cooling System	1	91108-
		421-23-32044	• Differential Assembly ..... Without Limited Slip Differential	1	91108-
		421-23-32044	• Differential Assembly ..... With Brake Oil Cooling System, Without Limited Slip Differential	1	91108-
1		07044-13620	• • Plug	1	90216-
2		07002-13634	• • O-ring	1	90216-
3		07040-11409	• • Plug	2	90216-
4		07002-61423	• • O-ring	2	90216-
5		419-33-11460	• • Bleeder	2	90216-
6		566-32-11620	• • Cap	2	90216-
7		07040-12012	• • Plug	2	90216-
8		07002-12034	• • O-ring	2	90216-
9		421-23-33151	• • Cover	1	90216-
10		04020-01228	• • Pin, Dowel	2	90216-
11		01010-61440	• • Bolt	24	90216-
12		01643-31445	• • Washer, Flat	24	90216-
13		07040-11812	• • Plug	2	90216-
14		07002-11823	• • O-ring	2	90216-

FIG. F4500-003005 Rear Axle (Differential) (3/3)

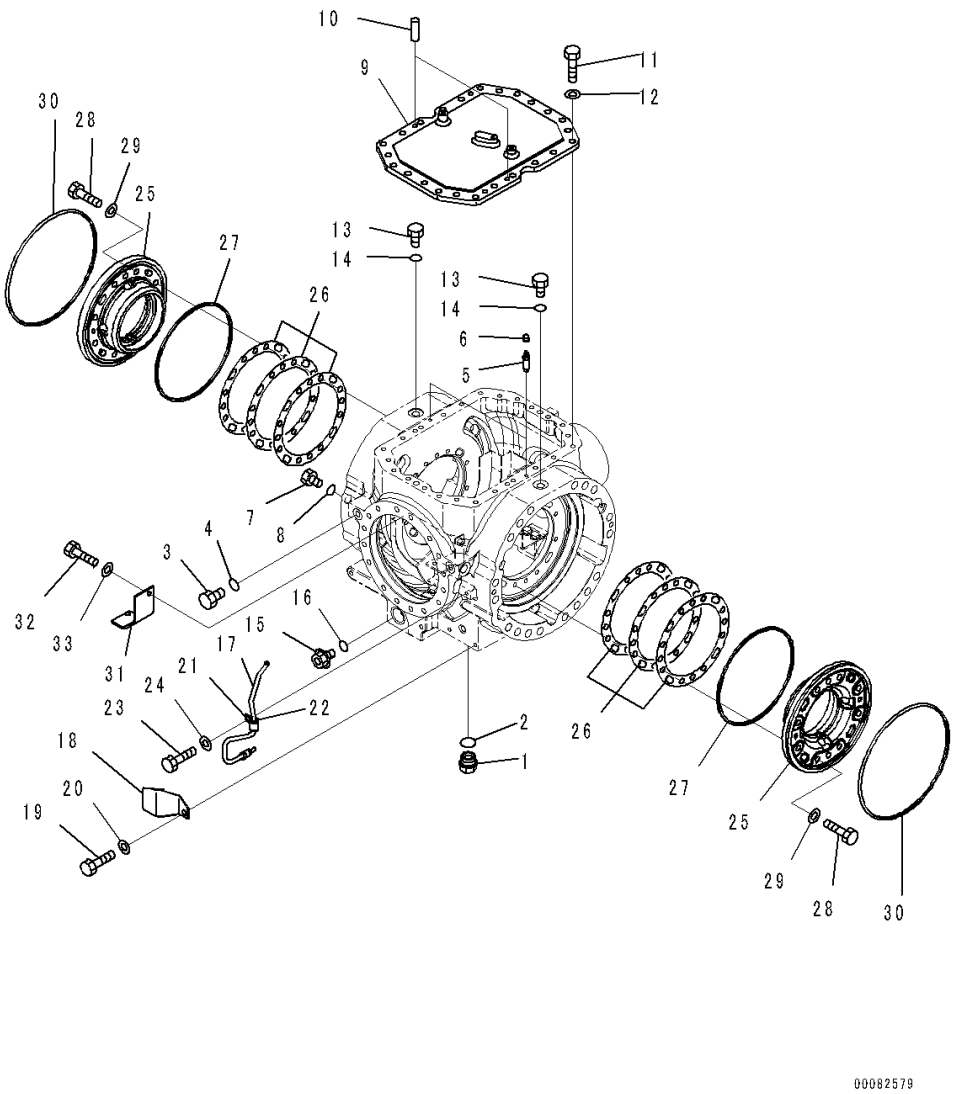

Index	Code	Part Number	Description	Qty	Serial Number
15		07041-13612	• • Plug	1	90216-
16		07002-13634	• • O-ring	1	90216-
17		426-06-31120	• • Sensor, Oil Temperature	1	90216-
18		419-22-33812	• • Cover	1	90216-
19		01010-61225	• • Bolt	2	90216-
20		01643-31232	• • Washer	2	90216-
21		04434-51612	• • Clip	1	90216-
22		07095-20211	• • Cushion	1	90216-
23		01010-61225	• • Bolt	1	90216-
24		01643-31232	• • Washer	1	90216-
25		421-23-31161	• • Carrier	2	90216-
26		421-23-31360	• • Shim, T=0.05mm	6	90216-
		421-23-31370	• • Shim, T=0.2mm	4	90216-
		421-23-31380	• • Shim, T=0.3mm	4	90216-
		421-23-31390	• • Shim, T=0.8mm	2	90216-
27		423-33-21430	• • Ring	2	90216-
28		01010-61445	• • Bolt	20	90216-
29		01643-31445	• • Washer, Flat	20	90216-
30		421-33-32420	• • Seal	2	90216-
31		421-23-33231	• • Bracket	1	90216-
32		01010-61025	• • Bolt	2	90216-
33		01643-31032	• • Washer	2	90216-

FIG. F4500-003006 Rear Axle (Brake)

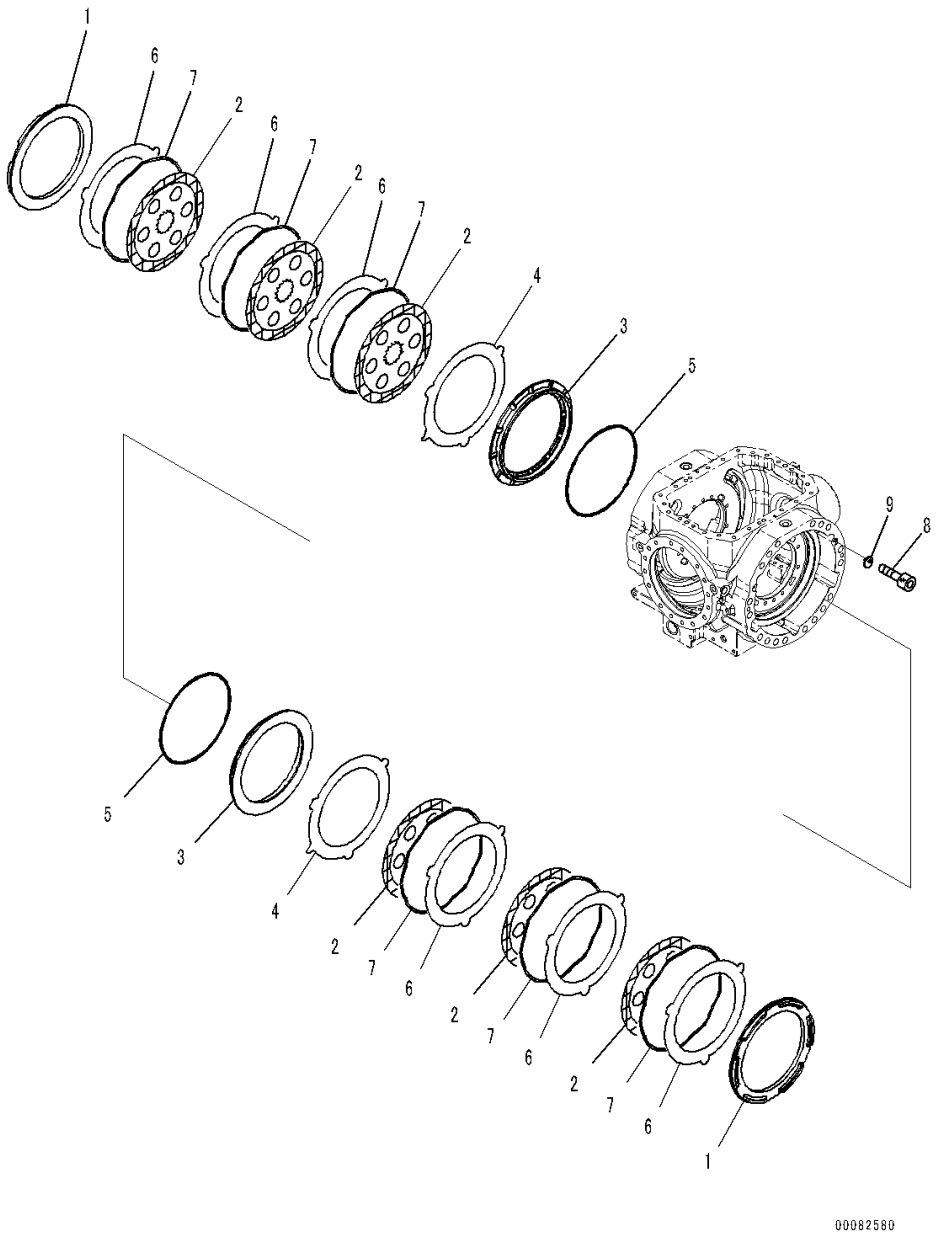

Index	Code	Part Number	Description	Qty	Serial Number
		Note: This list covers following specifications.			
		With Limited Slip Differential			
		With Limited Slip Differential, Brake Oil Cooling System			
		Without Limited Slip Differential			
		With Brake Oil Cooling System, Without Limited Slip Differential			
		421-23-30083	Axle Assembly, Rear ..... With Limited Slip Differential	1	91086-
		421-23-30083	Axle Assembly, Rear ..... With Limited Slip Differential, Brake Oil Cooling System	1	91086-
		421-23-30034	Axle Assembly, Rear ..... Without Limited Slip Differential	1	91086-
		421-23-30034	Axle Assembly, Rear ..... With Brake Oil Cooling System, Without Limited Slip Differential	1	91086-
1		421-33-32381	• Plate, Outer	2	90216-
2		421-33-32241	• Disc	6	90216-
3		421-33-32331	• Piston	2	90216-
4		421-33-32340	• Plate	2	90216-
5		423-33-21410	• Seal	2	90216-
6		421-33-32350	• Plate	6	90216-
7		421-33-31640	• Spring	6	90216-
8		01252-60816	• Bolt, Hexagon Socket Head	4	90216-
9		421-33-31451	• Plate	4	90216-

FIG. F4500-003007 Rear Axle (Mounting) (1/2)

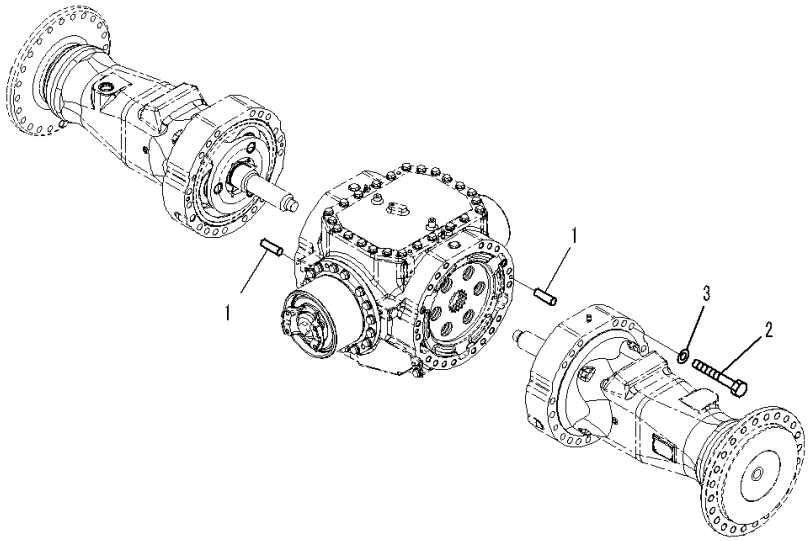

Index	Code	Part Number	Description	Qty	Serial Number
		Note: This list covers following specifications.			
		With Limited Slip Differential			
		With Limited Slip Differential, Brake Oil Cooling System			
		Without Limited Slip Differential			
		With Brake Oil Cooling System, Without Limited Slip Differential			
		421-23-30083	Axle Assembly, Rear ..... With Limited Slip Differential	1	91086-
		421-23-30083	Axle Assembly, Rear ..... With Limited Slip Differential, Brake Oil Cooling System	1	91086-
		421-23-30034	Axle Assembly, Rear ..... Without Limited Slip Differential	1	91086-
		421-23-30034	Axle Assembly, Rear ..... With Brake Oil Cooling System, Without Limited Slip Differential	1	91086-
1		04020-01228	• Pin, Dowel	4	90216-
2		01011-62035	• Bolt	36	90216-
3		01643-32060	• Washer	36	90216-

FIG. F4500-003008 Rear Axle (Mounting) (2/2)

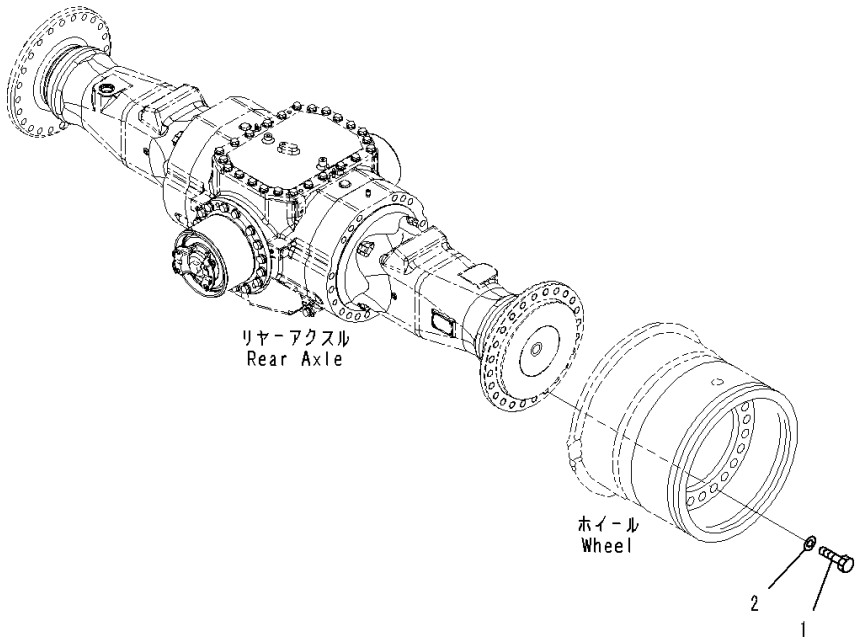

Index	Code	Part Number	Description	Qty	Serial Number
		Note: This list covers following specifications. With Limited Slip Differential With Limited Slip Differential, Brake Oil Cooling System Without Limited Slip Differential With Brake Oil Cooling System, Without Limited Slip Differential			
1		419-22-12870	Bolt	48	90216-
2		01643-32460	Washer	48	90216-

FIG. F4500-006009 Rear Axle (Piping)

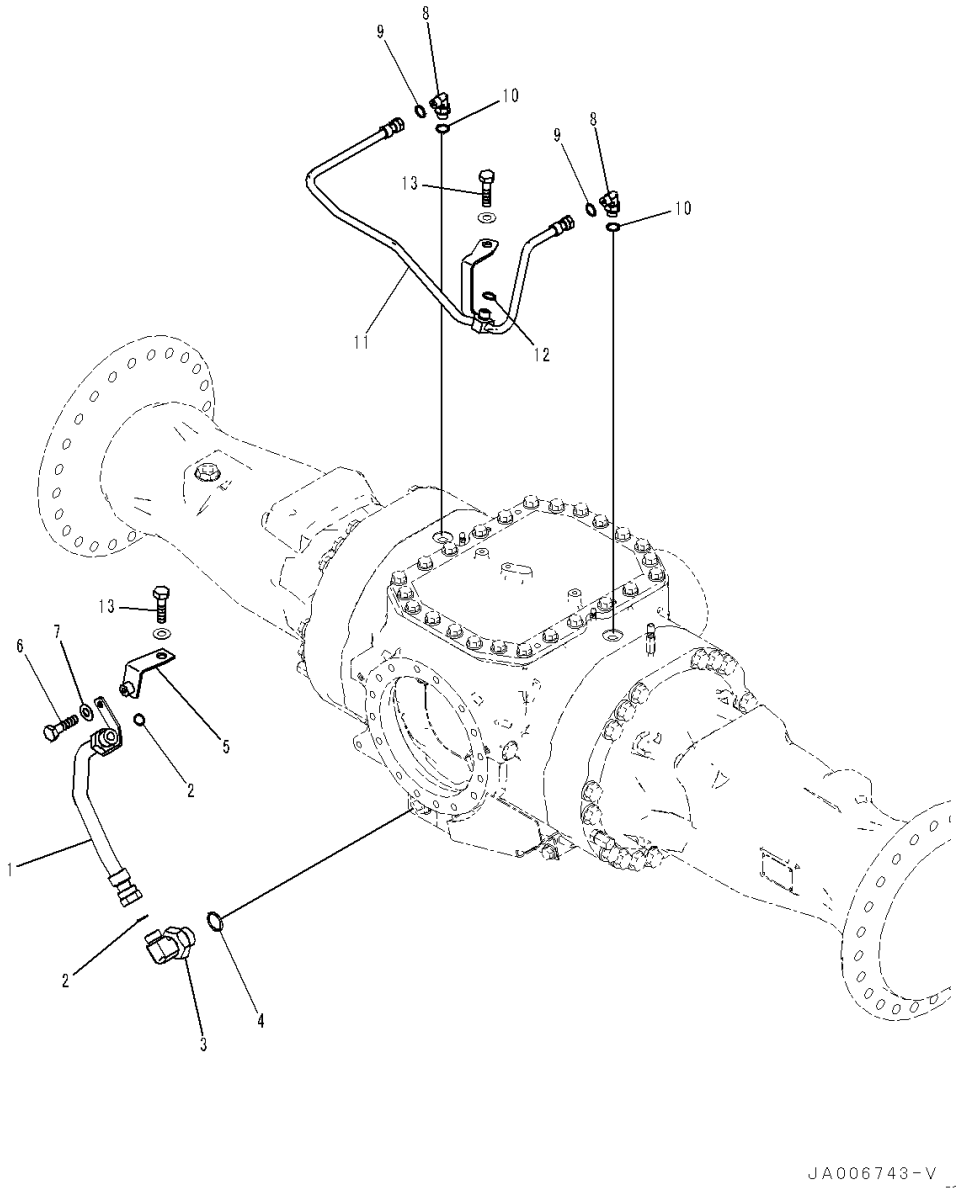

Index	Code	Part Number	Description	Qty	Serial Number
		Note: This list covers following specifications. With Limited Slip Differential, Brake Oil Cooling System With Brake Oil Cooling System, Without Limited Slip Differential			
1		421-U44-4790	Tube	1	90216-
2		02896-21018	O-ring	2	90216-
3		421-U44-3830	Elbow	1	90216-
4		07002-23634	O-ring	1	90216-
5		421-U45-4320	Bracket	1	90216-
6		01010-81020	Bolt	1	90216-
7		01643-31032	Washer	1	90216-
8		02782-10313	Elbow	2	90216-
9		02896-21009	O-ring	2	90216-
10		07002-21823	O-ring	2	90216-
11		421-U44-4470	Tube	1	90216-
12		02896-21012	O-ring	1	90216-
13		01010-61445	Bolt	2	90216-

FIG. F4500-004001 Rear Axle (Final Drive L.H.)

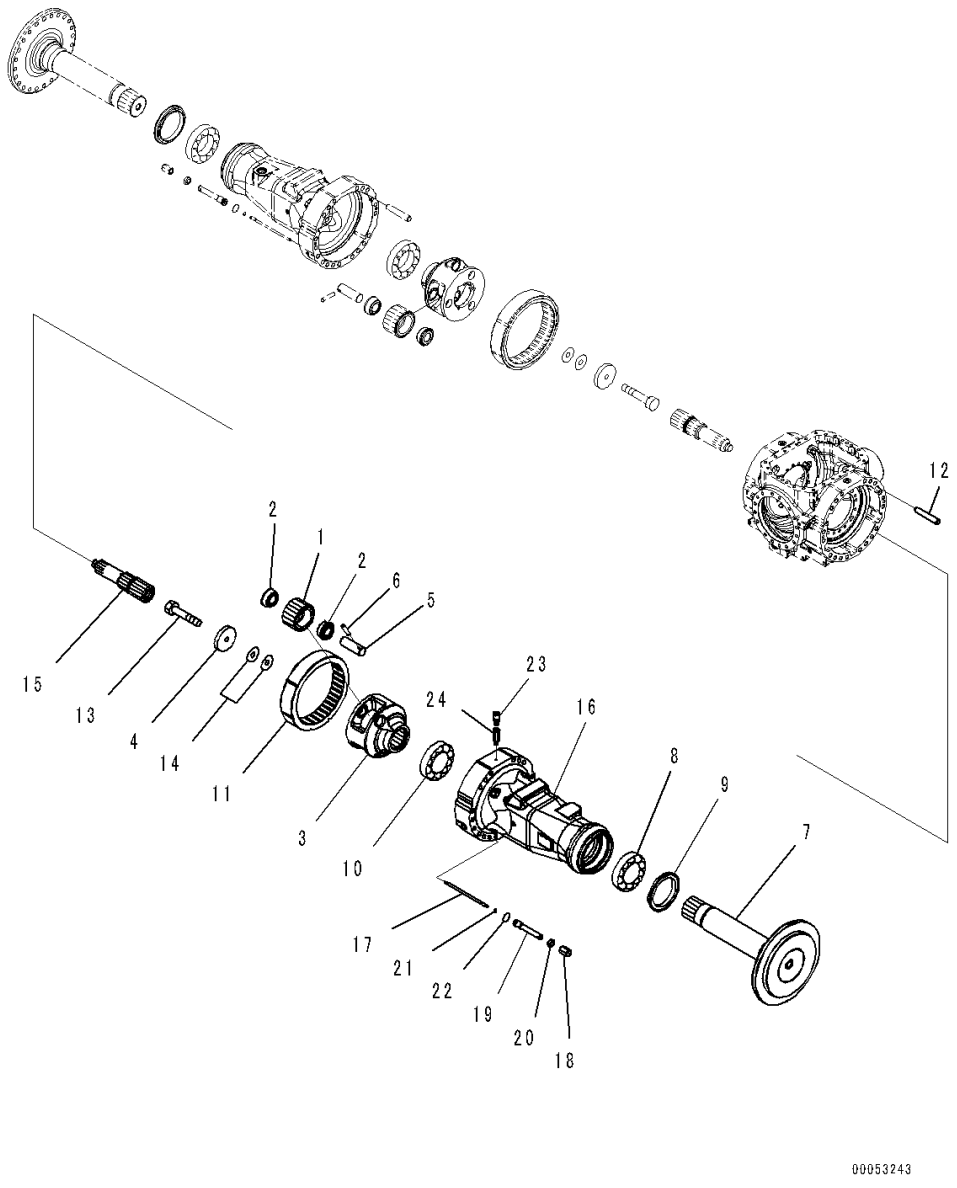

Index	Code	Part Number	Description	Qty	Serial Number
		Note: This list covers following specifications.			
		With Limited Slip Differential			
		With Limited Slip Differential, Brake Oil Cooling System			
		Without Limited Slip Differential			
		With Brake Oil Cooling System, Without Limited Slip Differential			
		421-23-30034	Axle Assembly, Rear ..... Without Limited Slip Differential	1	91086-
		421-23-30083	Axle Assembly, Rear ..... With Limited Slip Differential	1	91086-
		421-23-30083	Axle Assembly, Rear ..... With Limited Slip Differential, Brake Oil Cooling System	1	91086-
		421-23-30034	Axle Assembly, Rear ..... With Brake Oil Cooling System, Without Limited Slip Differential	1	91086-
		421-23-32020	• Final Drive Assembly	1	90216-
1		421-23-32530	• • Gear	3	90216-
2		421-23-32810	• • Bearing	6	90216-
3		421-23-32630	• • Carrier	1	90216-
4		421-23-32352	• • Washer	1	90216-
5		421-23-32511	• • Shaft	3	90216-
6		421-22-32570	• • Pin	3	90216-
7		421-23-32431	• • Shaft	1	90216-
8		421-22-32850	• • Bearing	1	90216-
9		421-22-32460	• • Seal	1	90216-
10		421-22-41860	• • Bearing	1	90799-
11		421-23-32543	• • Gear	1	90216-
12		419-22-12581	• • Pin, Dowel	4	90216-
13		01011-62210	• • Bolt	1	90216-
14		421-23-32470	• • Shim, T=0.05mm	3	90216-
		421-23-32480	• • Shim, T=0.2mm	2	90216-
		421-23-32490	• • Shim, T=0.5mm	3	90216-
15		421-23-32421	• • Shaft	1	90216-
16		421-23-33510	• • Housing	1	90216-
17		421-33-31711	• • Shaft	1	90216-
18		421-33-31730	• • Cap	1	90216-
19		421-33-31721	• • Guide	1	90216-
20		01583-11610	• • Nut	1	90216-
21		07000-11005	• • O-ring	1	90216-

FIG. F4500-004001 Rear Axle (Final Drive L.H.)

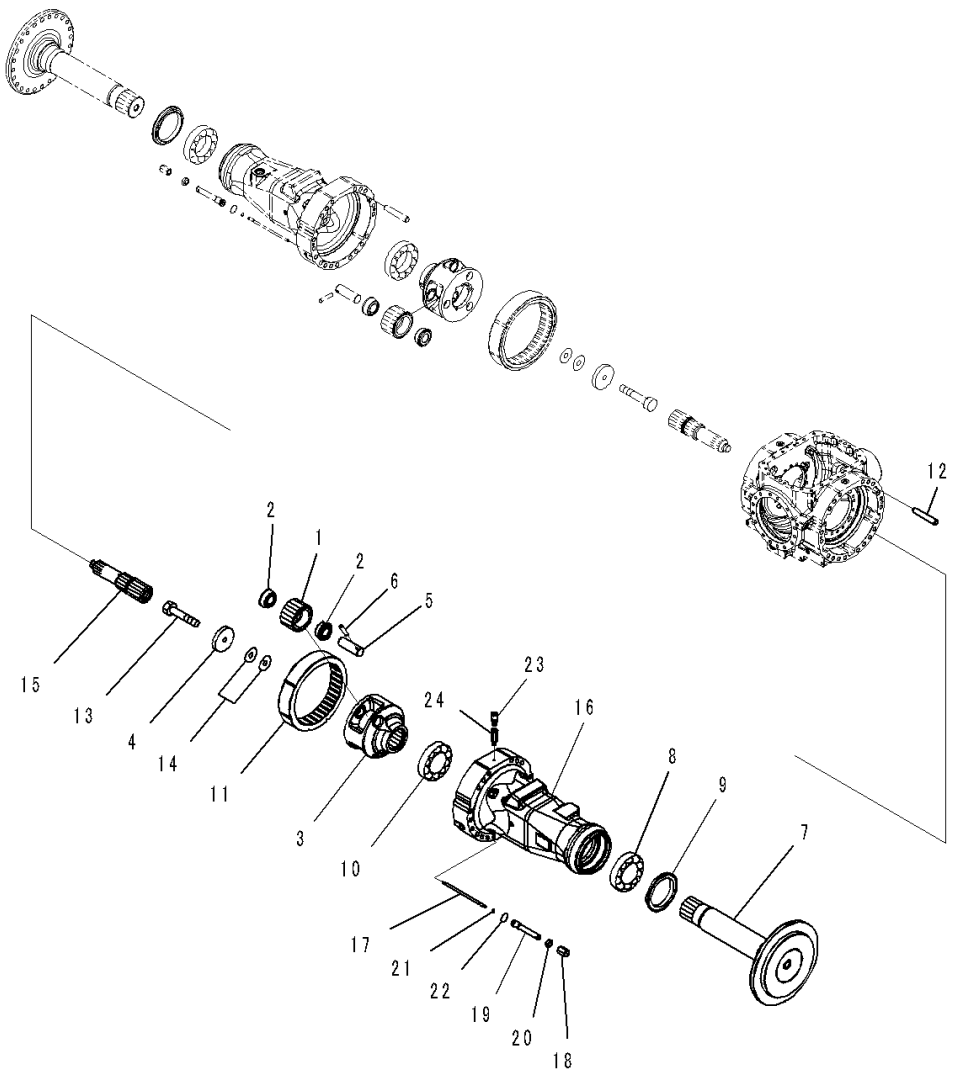

Index	Code	Part Number	Description	Qty	Serial Number
22		07000-12018	• • O-ring	1	90216-
23		07030-01030	• • Breather	1	90216-
24		6141-55-5630	• • Nipple	1	90216-

FIG. F4500-004004A Rear Axle (Differential) (2/3)

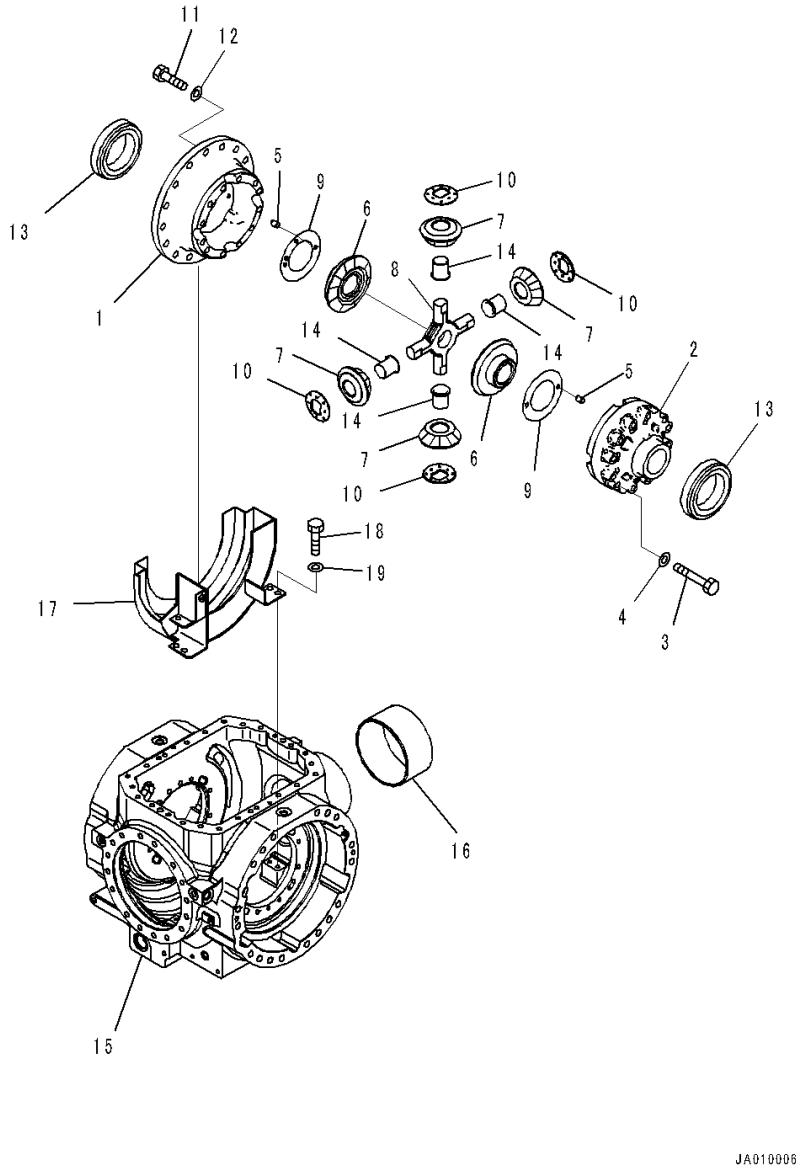

Index	Code	Part Number	Description	Qty	Serial Number
		Note: This list covers following specifications. Without Limited Slip Differential With Brake Oil Cooling System, Without Limited Slip Differential			
		421-23-30034	Axle Assembly, Rear	1	91086-
		421-23-32044	• Differential Assembly	1	91108-
		421-23-41500	• • Case Assembly	1	90799-
1	C1		• • • Case, Flange	1	90799-
2	C1		• • • Case, Plane	1	90799-
3		01011-61425	• • • Bolt	12	90799-
4		01643-31445	• • • Washer, Flat	12	90216-
5		175-21-12180	• • • Pin	4	90216-
6		421-23-41460	• • Gear	2	90799-
7		421-22-31540	• • Pinion	4	90799-
8		421-22-31410	• • Shaft	1	90799-
9		56B-22-11460	• • Washer	2	90799-
10		56B-22-11770	• • Washer	4	90799-
11		01010-61645	• • Bolt	16	90216-
12		01643-31645	• • Washer	16	90216-
13		421-22-41860	• • Bearing	2	90799-
14		421-22-41570	• • Bushing	4	90799-
15		421-23-33870	• • Housing	1	91112-
16		421-23-33170	• • Sleeve	1	90216-
17		421-23-31832	• • Cover, Gear	1	90216-
18		01010-61225	• • Bolt	4	90216-
19		01643-31232	• • Washer	4	90216-

FIG. F4810-001001 Transmission Mounting

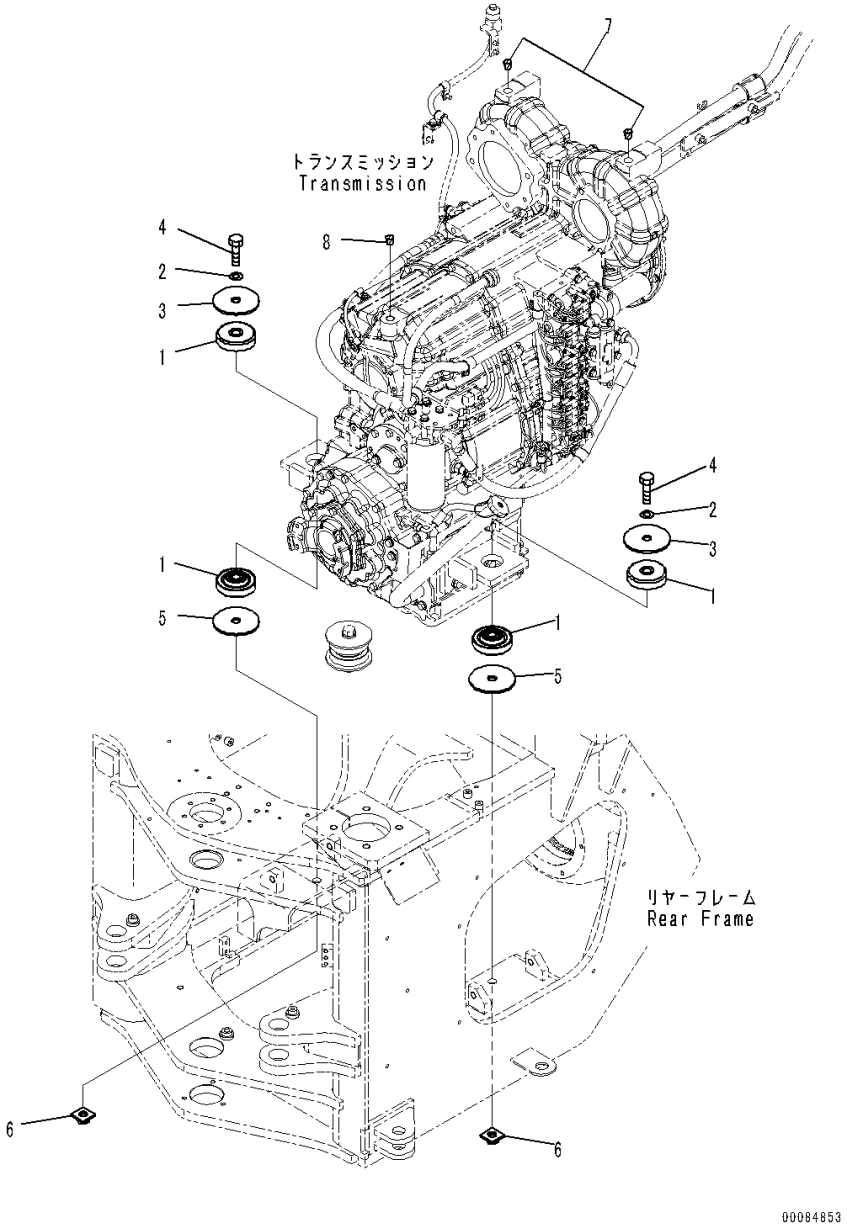

Index	Code	Part Number	Description	Qty	Serial Number
1		421-01-41140	Cushion	4	90216-
2		01643-32060	Washer	2	90216-
3		424-01-11220	Washer	2	90216-
4		01011-62030	Bolt	2	90216-
5		424-01-11220	Washer	2	90216-
6		421-01-41550	Bracket	2	90216-
7		07049-02430	Plug	2	90216-
8		07049-03038	Plug, Cork	1	90216-

HYDRAULIC SYSTEM

FIG. H0110-006001 Hydraulic Tank (Without Emergency Steering, Automatic Control Type) (Hydraulic Tank Elbow)

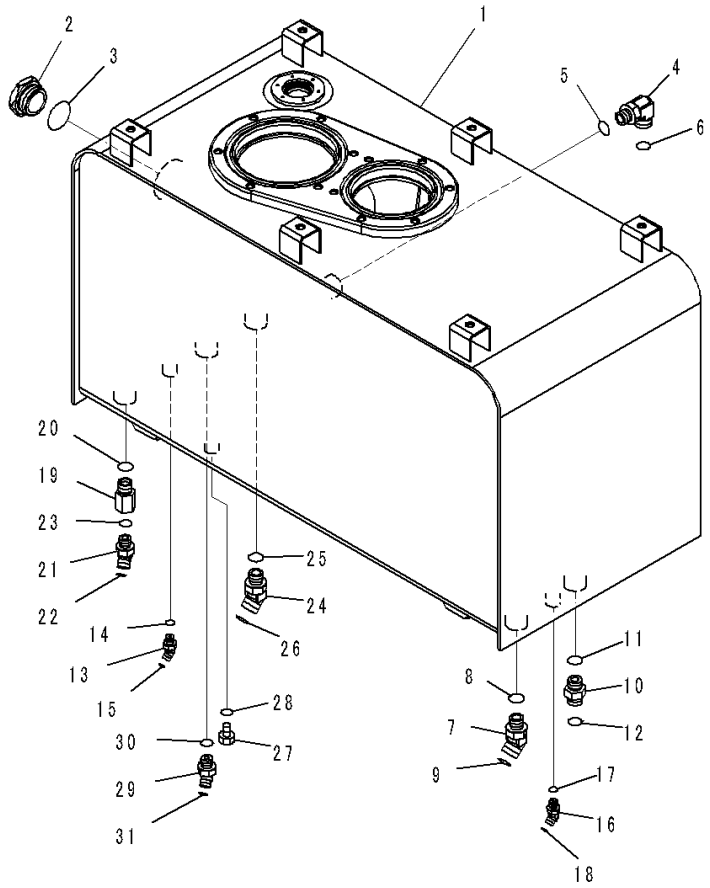

Index	Code	Part Number	Description	Qty	Serial Number
1		421-60-45611	Tank	1	90216-
2		421-60-11622	Gauge	1	90216-
3		07002-15234	O-ring	1	90216-
4		02782-10628	Elbow	1	90216-
5		07002-12434	O-ring	1	90216-
6		02896-11018	O-ring	1	90216-
7		02783-10628	Elbow	1	90216-
8		07002-12434	O-ring	1	90216-
9		02896-11018	O-ring	1	90216-
10		02781-00522	Union	1	90216-
11		07002-12434	O-ring	1	90216-
12		02896-11015	O-ring	1	90216-
13		02783-10210	Elbow	1	90216-
14		07002-11423	O-ring	1	90216-
15		02896-11008	O-ring	1	90216-
16		421-62-41970	Elbow	1	90216-
17		07002-11423	O-ring	1	90216-
18		02896-11008	O-ring	1	90216-
19		21W-62-42820	Joint	1	90216-
20		07002-12434	O-ring	1	90216-
21		02783-10422	Elbow	1	90216-
22		02896-11012	O-ring	1	90216-
23		07002-12034	O-ring	1	90216-
24		11Y-62-36160	Elbow	1	90216-
25		07002-12434	O-ring	1	90216-
26		02896-11018	O-ring	1	90216-
27		07040-11409	Plug	1	90216-
28		07002-11423	O-ring	1	90216-
29		02783-10315	Elbow	1	90216-
30		07002-12034	O-ring	1	90216-
31		02896-11009	O-ring	1	90216-

FIG. H0110-006002 Hydraulic Tank (Element and Strainer)

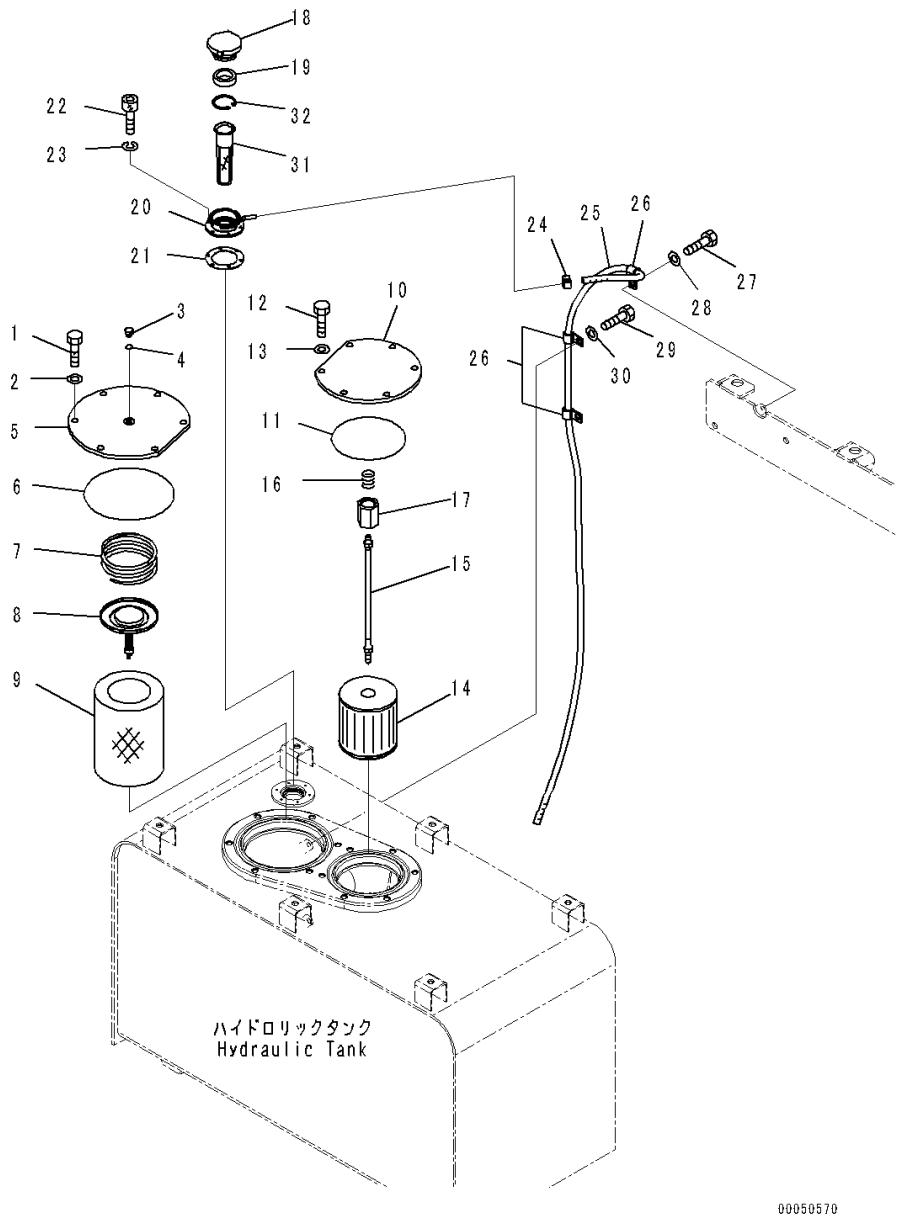

Index	Code	Part Number	Description	Qty	Serial Number
		Note: This list covers following specifications.			
		Without Emergency Steering, Automatic Control Type			
		With Emergency Steering, Automatic Control Type			
1		01010-81230	Bolt	6	90216-
2		01643-31232	Washer	6	90216-
3		424-60-15150	Plug	1	90216-
4		07000-12010	O-ring	1	90216-
5		421-60-45190	Cover	1	90216-
6		07000-15195	O-ring	1	90216-
7		20Y-60-21240	Spring	1	90216-
8		20Y-60-31131	Valve Assembly	1	90216-
9		207-60-71182	Element, Hydraulic Oil Filter	1	90216-
10		207-60-71131	Cover	1	90216-
11		07000-15160	O-ring	1	90216-
12		01010-81230	Bolt	6	90216-
13		01643-31232	Washer	6	90216-
		421-60-45150	Strainer Assembly	1	90216-
14		22B-60-11160	• Strainer	1	90216-
15		421-60-45160	• Rod Assembly	1	90216-
16		12R-60-11230	• • Spring	1	90216-
17		20Y-60-21320	• • Holder	1	90216-
18		423-60-35421	Breather	1	90216-
19		423-60-35460	• Element	1	90216-
20		423-60-35430	Filler	1	90216-
21		20Y-60-21340	Gasket	1	90216-
22		01252-70516	Bolt	6	90216-
23		01601-20513	Washer	6	90216-
24		11Y-09-11120	Clip	1	90216-
25		07270-40817	Tube	1	90216-
26		04434-51312	Clip	3	90216-
27		01010-81020	Bolt	1	90216-
28		01643-31032	Washer	1	90216-
29		01010-81225	Bolt	2	90216-
30		01643-31232	Washer	2	90216-
31		07056-10045	Strainer	1	90216-
32		04065-04718	Ring, Snap	1	90216-

FIG. H0110-006003 Hydraulic Tank (Bracket)

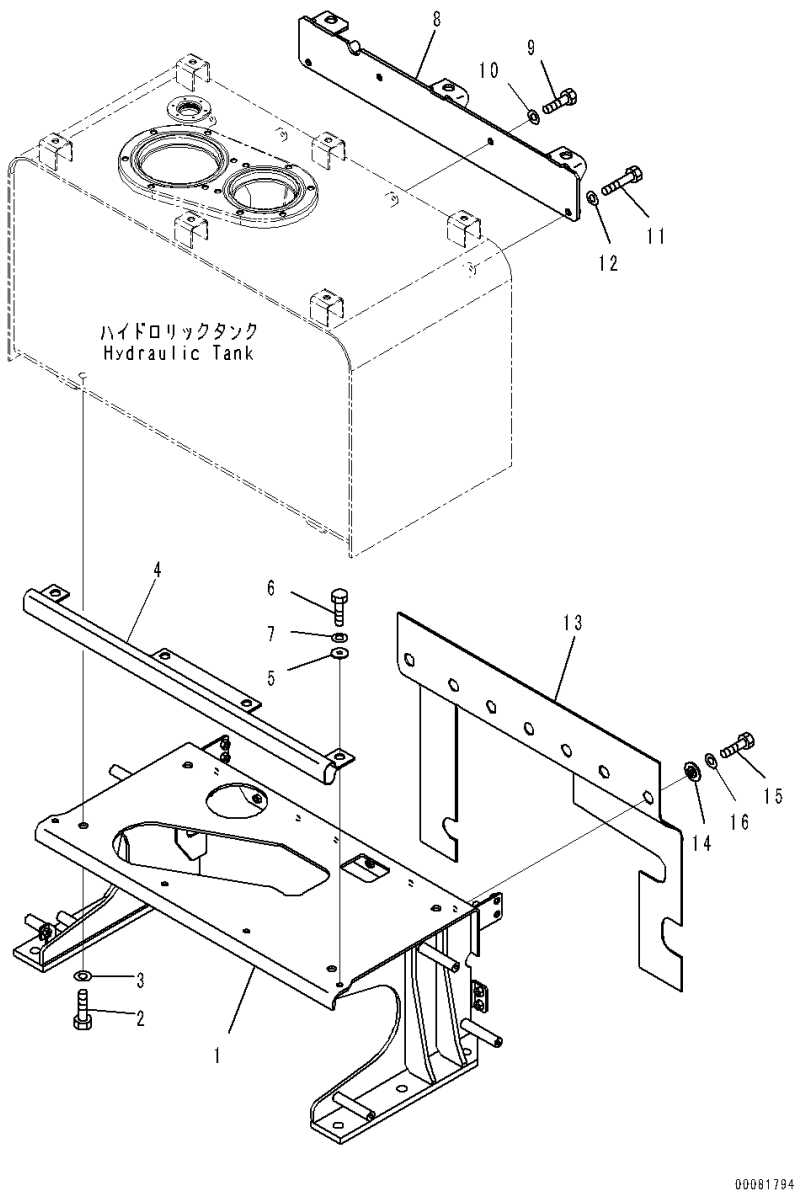

Index	Code	Part Number	Description	Qty	Serial Number
		Note: This list covers following specifications.			
		Without Emergency Steering, Automatic Control Type			
		With Emergency Steering, Automatic Control Type			
1		421-60-45520	Bracket	1	90216-
2		01010-81630	Bolt	4	90216-
3		01643-31645	Washer	4	90216-
4		423-54-48460	Sheet	1	90216-
5		103-54-21160	Collar	4	90216-
6		01010-81025	Bolt	4	90216-
7		01643-31032	Washer	4	90216-
8		421-60-45180	Bracket	1	90216-
9		01010-81225	Bolt	2	90216-
10		01643-31232	Washer	2	90216-
11		01010-81240	Bolt	2	90216-
12		01643-31232	Washer	2	90216-
13		421-60-45390	Sheet	1	90216-
14		203-54-62670	Collar	7	90216-
15		01010-81025	Bolt	7	90216-
16		01643-31032	Washer	7	90216-

FIG. H0110-006004 Hydraulic Tank (Cover and Dust Indicator)

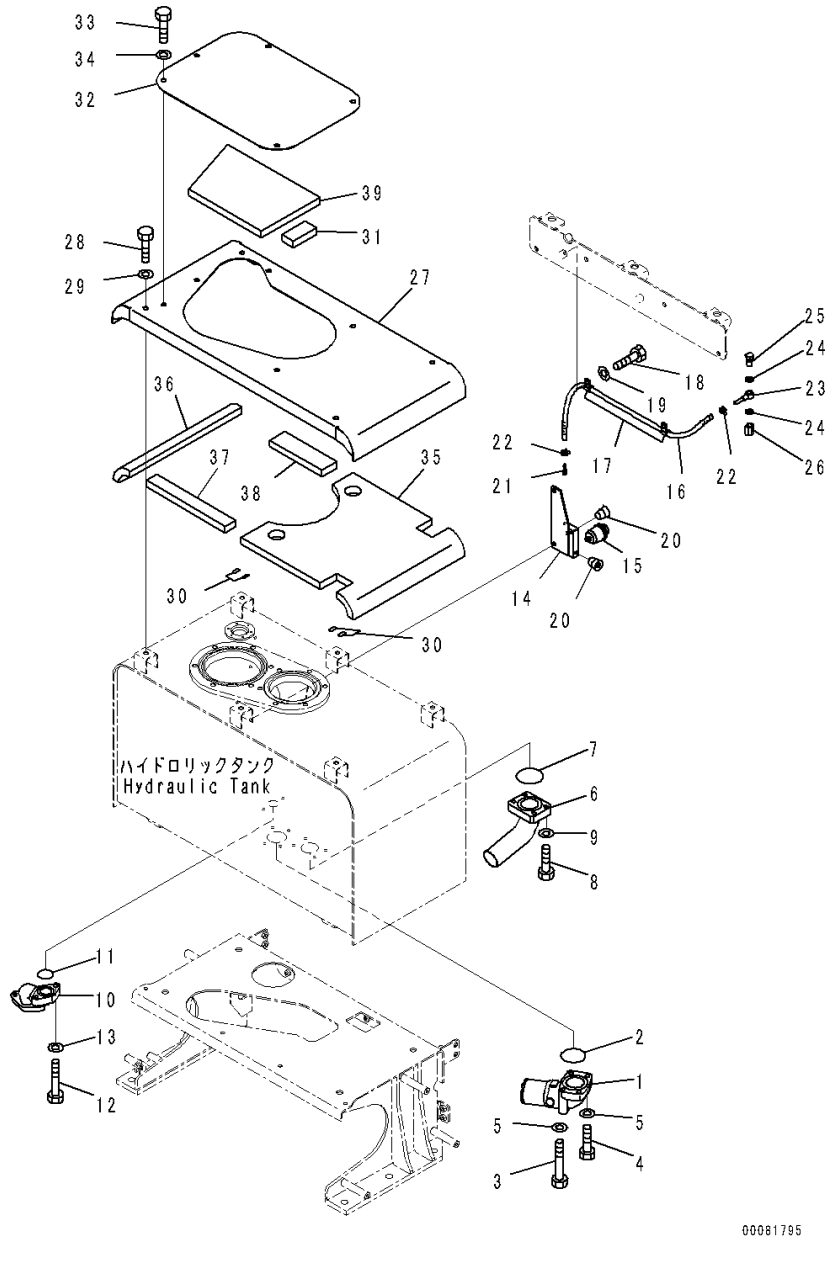

Index	Code	Part Number	Description	Qty	Serial Number
		Note: This list covers following specifications.			
		Without Emergency Steering, Automatic Control Type			
		With Emergency Steering, Automatic Control Type			
1		421-62-45650	Elbow	1	90216-
2		07000-12070	O-ring	1	90216-
3		01011-81205	Bolt	2	90216-
4		01010-81245	Bolt	2	90216-
5		01643-51232	Washer	4	90216-
6		421-62-45660	Tube	1	90216-
7		07000-12075	O-ring	1	90216-
8		01010-81245	Bolt	4	90216-
9		01643-51232	Washer	4	90216-
10		421-62-45670	Tube	1	90216-
11		07000-13045	O-ring	1	90216-
12		01010-81245	Bolt	2	90517-
13		01643-31232	Washer	2	90216-
14		421-01-41210	Bracket	1	90216-
15		08672-01000	Indicator	1	90216-
16		421-01-42220	Hose	1	90216-
17		04434-51410	Clip	2	90216-
18		01010-81020	Bolt	2	90216-
19		01643-31032	Washer	2	90216-
20		02720-20204	Plug	2	90216-
21		6131-81-8820	Nipple	1	90216-
22		07285-00125	Clip	2	90216-
23		6206-71-1770	Joint	1	90216-
24		07005-01012	Seal, Washer	2	90216-
25		07206-30710	Bolt, Joint	1	90216-
26		6156-81-8990	Nipple	1	90216-
27		421-60-45170	Cover	1	90216-
28		01010-81220	Bolt	4	90216-
29		01643-31232	Washer	4	90216-
30		421-09-21420	Sheet	4	90216-
31		421-60-45140	Rubber	1	90216-
32		421-60-45220	Plate	1	90216-
33		01010-81220	Bolt	5	90216-
34		01643-31232	Washer	5	90216-
35		421-60-45410	Sheet	1	90216-
36		421-60-45420	Sheet	1	90216-
37		421-60-45430	Sheet	1	90216-

FIG. H0110-006004 Hydraulic Tank (Cover and Dust Indicator)

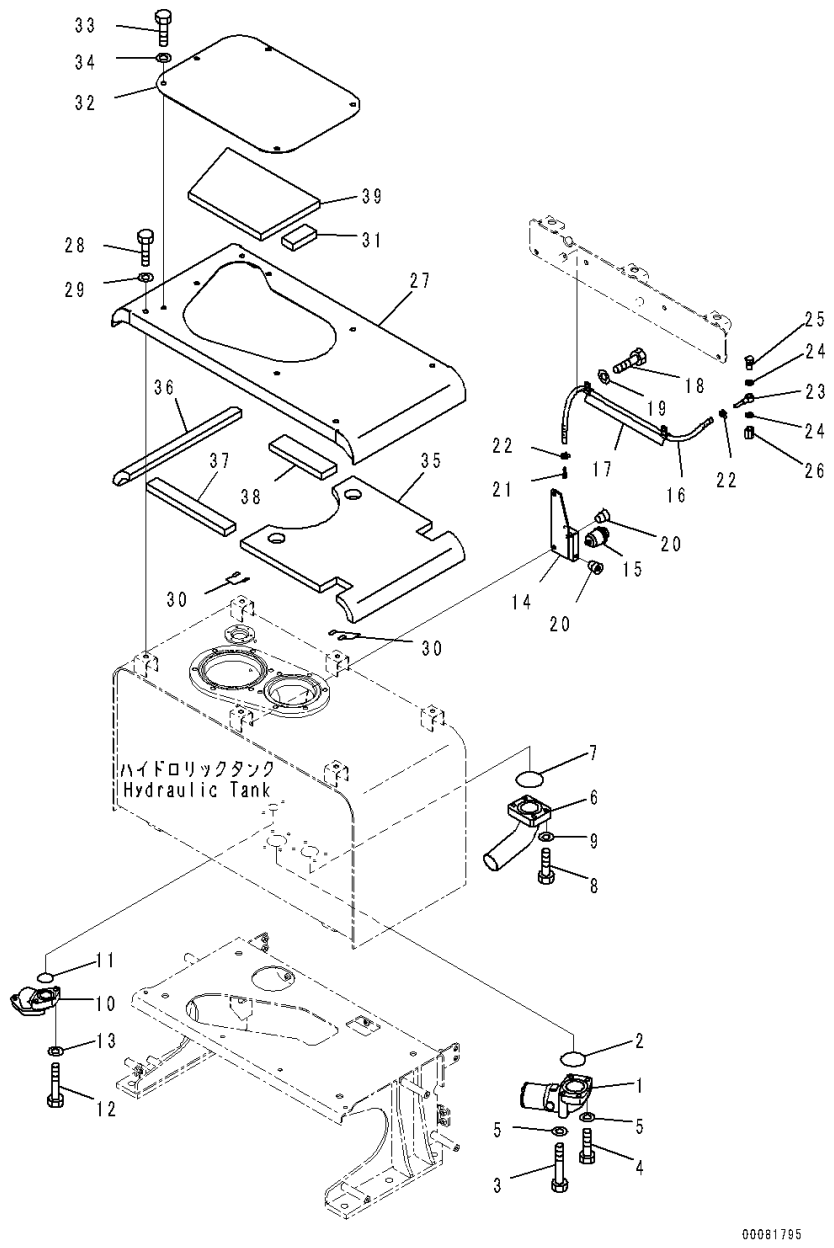

Index	Code	Part Number	Description	Qty	Serial Number
38		421-60-45440	Sheet	1	90216-
39		421-60-45450	Sheet	1	90216-

FIG. H0110-006005 Hydraulic Tank (Without Emergency Steering, Automatic Control Type) (Mounting)

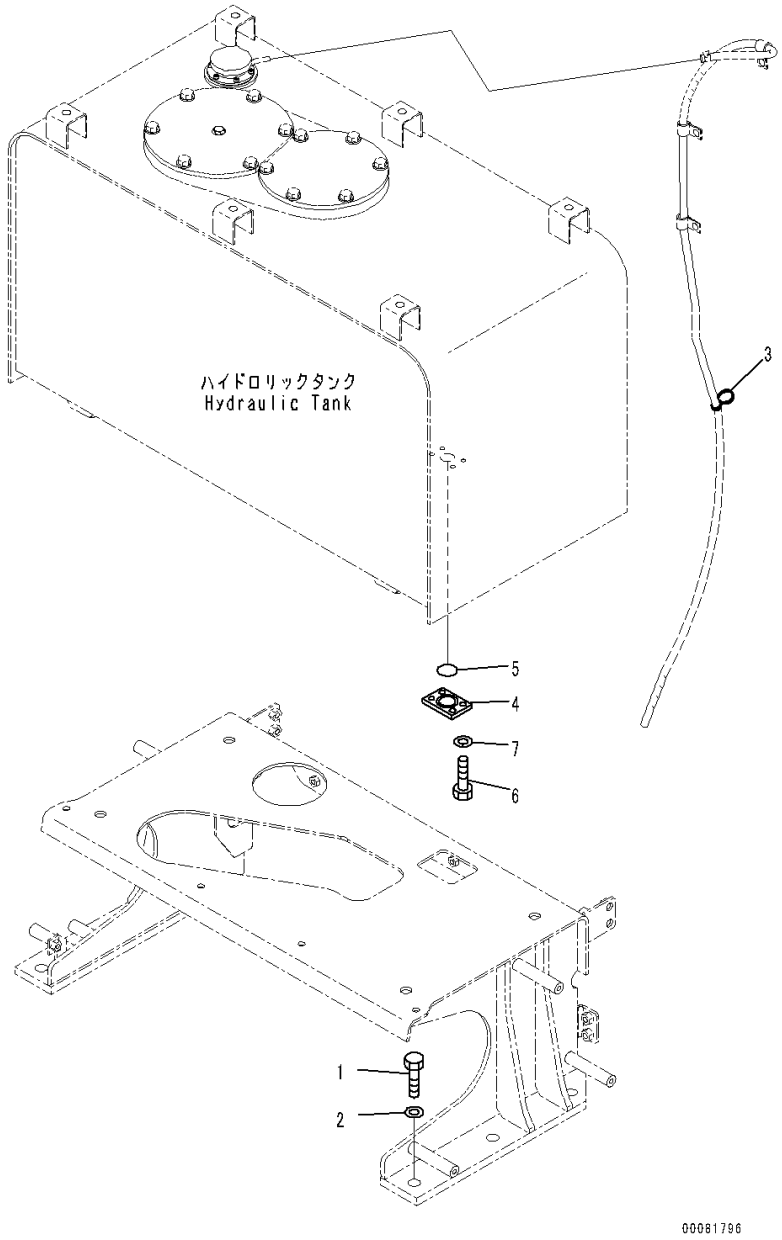

Index	Code	Part Number	Description	Qty	Serial Number
1		01010-81645	Bolt	6	90216-
2		01643-31645	Washer	6	90216-
3		08034-40521	Band	1	90216-
4		708-2L-29490	Plate	1	90216-
5		07000-13032	O-ring	1	90216-
6		01010-81025	Bolt	4	90216-
7		01643-31032	Washer	4	90216-

FIG. H0110-005001 Hydraulic Tank (With Emergency Steering, Automatic Control Type) (Hydraulic Tank Elbow)

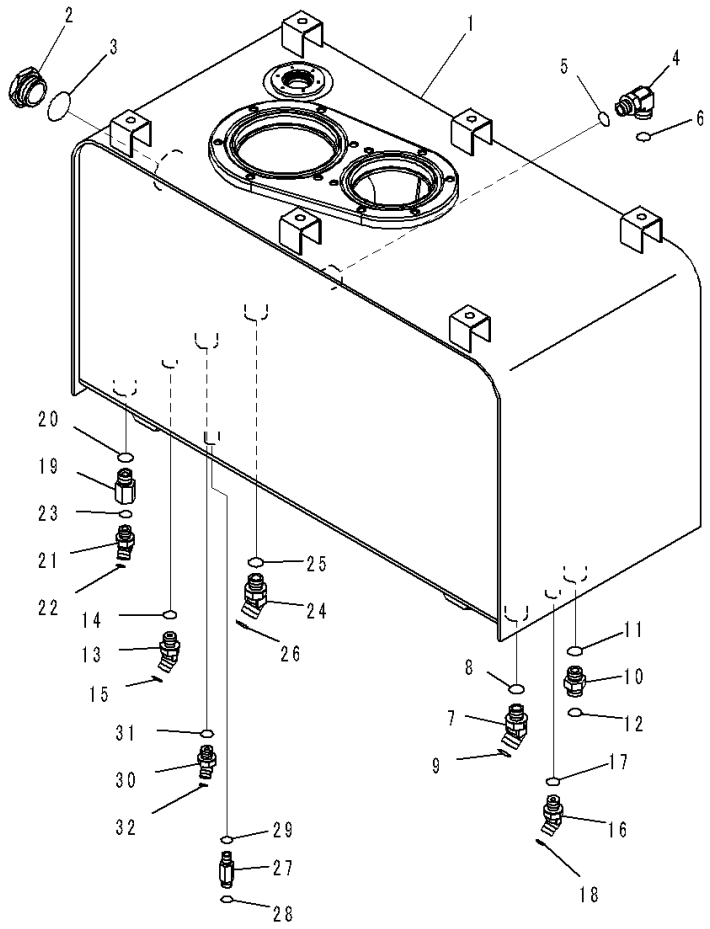

Index	Code	Part Number	Description	Qty	Serial Number
1		421-60-45611	Tank	1	90216-
2		421-60-11622	Gauge	1	90216-
3		07002-15234	O-ring	1	90216-
4		02782-10628	Elbow	1	90216-
5		07002-12434	O-ring	1	90216-
6		02896-11018	O-ring	1	90216-
7		02783-10628	Elbow	1	90216-
8		07002-12434	O-ring	1	90216-
9		02896-11018	O-ring	1	90216-
10		02781-00522	Union	1	90216-
11		07002-12434	O-ring	1	90216-
12		02896-11015	O-ring	1	90216-
13		02783-10210	Elbow	1	90216-
14		07002-11423	O-ring	1	90216-
15		02896-11008	O-ring	1	90216-
16		421-62-41970	Elbow	1	90216-
17		07002-11423	O-ring	1	90216-
18		02896-11008	O-ring	1	90216-
19		21W-62-42820	Joint	1	90216-
20		07002-12434	O-ring	1	90216-
21		02783-10422	Elbow	1	90216-
22		02896-11012	O-ring	1	90216-
23		07002-12034	O-ring	1	90216-
24		11Y-62-36160	Elbow	1	90216-
25		07002-12434	O-ring	1	90216-
26		02896-11018	O-ring	1	90216-
27		20U-62-41890	Nipple	1	90216-
28		02896-11008	O-ring	1	90216-
29		07002-11423	O-ring	1	90216-
30		02783-10315	Elbow	1	90216-
31		07002-12034	O-ring	1	90216-
32		02896-11009	O-ring	1	90216-

FIG. H0110-005005 Hydraulic Tank (With Emergency Steering, Automatic Control Type) (Mounting)

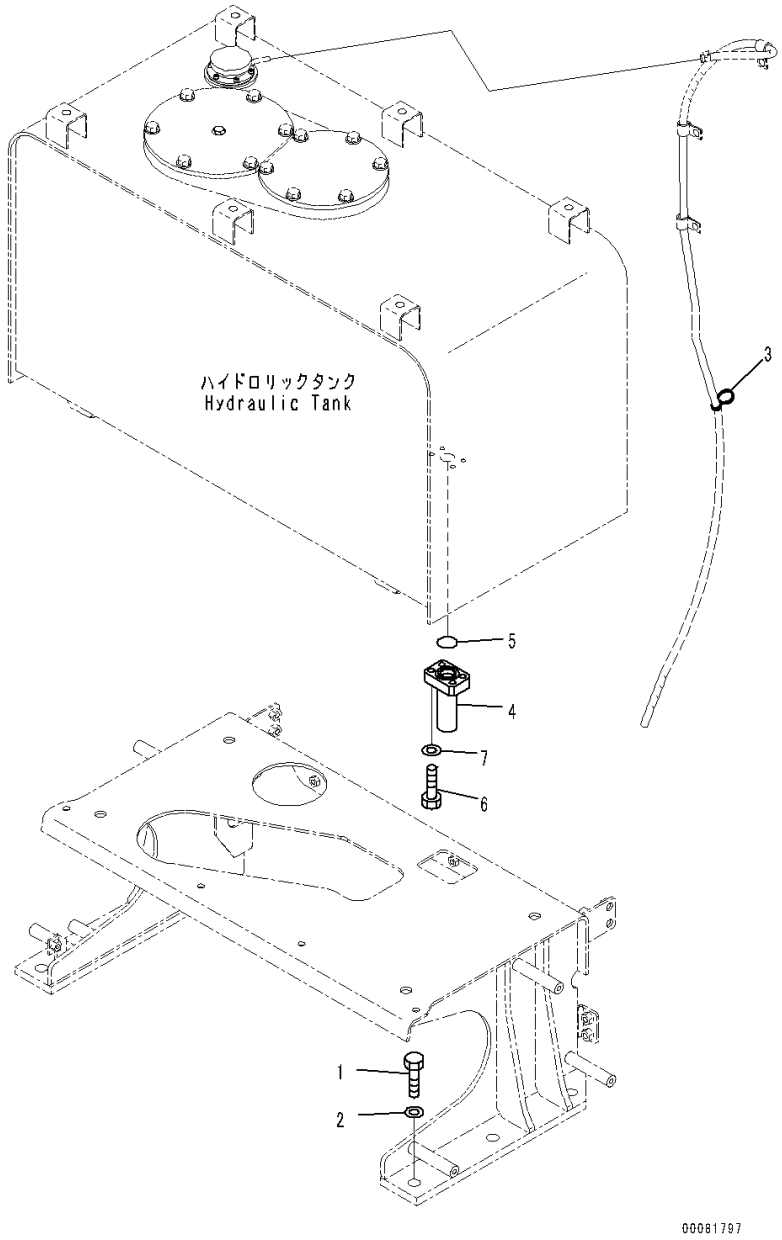

Index	Code	Part Number	Description	Qty	Serial Number
1		01010-81645	Bolt	6	90216-
2		01643-31645	Washer	6	90216-
3		08034-40521	Band	1	90216-
4		423-60-35520	Tube	1	90216-
5		07000-13032	O-ring	1	90216-
6		01010-81040	Bolt	4	90216-
7		01643-31032	Washer	4	90216-

FIG. H0120-008001A Hydraulic Oil Control Valve (3-valve) (1/8)

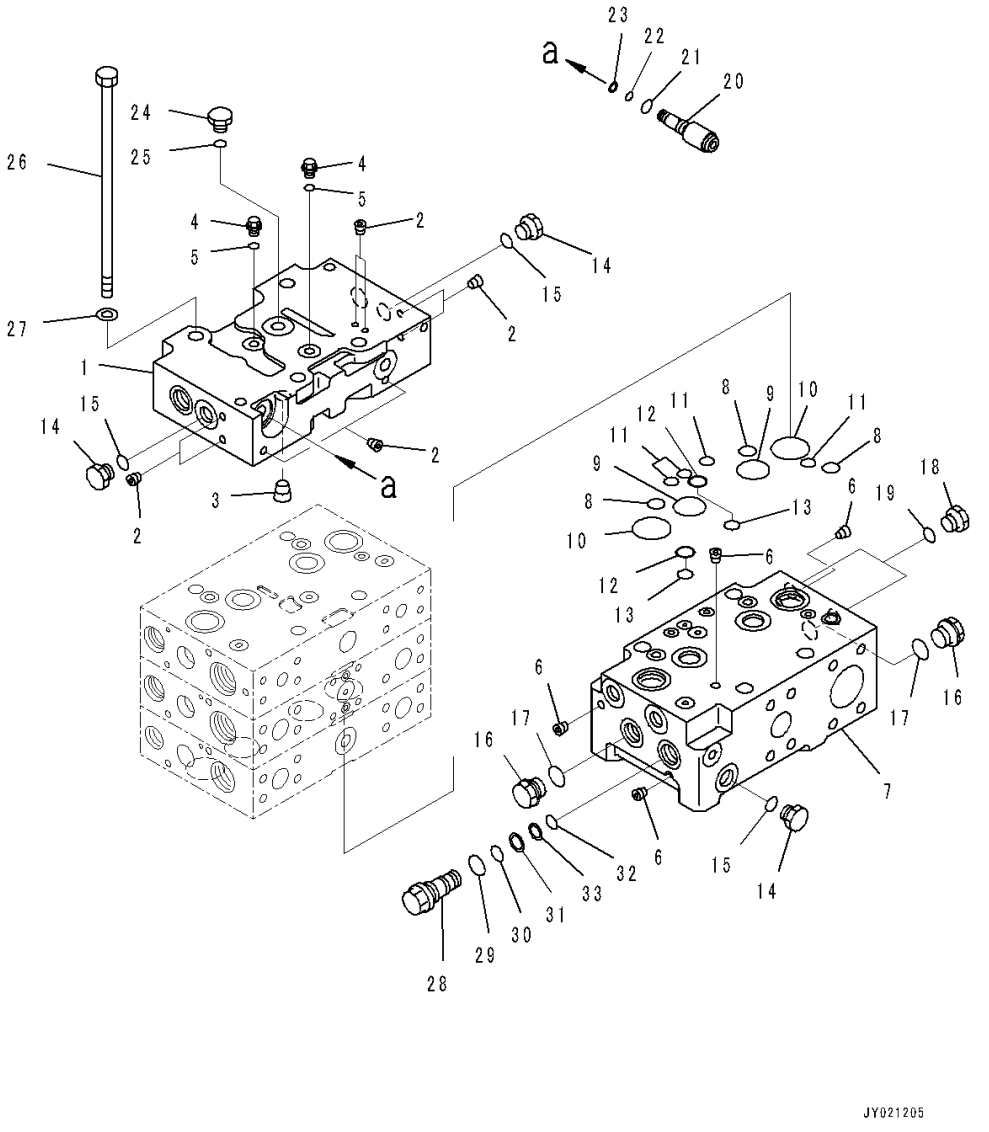

Index	Code	Part Number	Description	Qty	Serial Number
		Note: This list covers following specifications. With 2-Spool Control Valve With 2-Spool Control Valve, ECSS With 2-Spool Control Valve, Brake Oil Cooling System With 2-Spool Control Valve, ECSS, Brake Oil Cooling System			
		723-43-13500	Valve Assembly, Control ..... With 2-Spool Control Valve	1	90216-
		723-43-13400	Valve Assembly, Control ..... With 2-Spool Control Valve, ECSS	1	90216-
		723-43-13500	Valve Assembly, Control ..... With 2-Spool Control Valve, Brake Oil Cooling System	1	90216-
		723-43-13400	Valve Assembly, Control ..... With 2-Spool Control Valve, ECSS, Brake Oil Cooling System	1	90216-
		723-46-00931	• Cover Assembly	1	90838-
1	C1		• • Cover	1	90838-
2	C1		• • Plug	8	90216-
3	C1		• • Plug	1	90216-
4		708-8E-16150	• Plug	2	90216-
5		07002-11023	• O-ring	2	90216-
		723-46-00940	• Cover Assembly	1	90216-
6	C1		• • Plug	4	90216-
7	C1		• • Cover	1	90216-
8		722-12-19070	• O-ring	3	90216-
9		723-46-16520	• O-ring	2	90216-
10		723-46-17510	• O-ring	2	90216-
11		723-46-17530	• O-ring	4	90216-
12		723-46-17520	• Ring, Back-up	2	90216-
13		723-11-19130	• O-ring	2	90216-
14		708-8E-16250	• Plug	3	90216-
15		07002-11823	• O-ring	3	90216-
16		709-74-91860	• Plug	2	90216-
17	C1		• O-ring	2	90216-
18		708-8E-16250	• Plug	2	90838-
19		07002-11823	• O-ring	2	90838-
20		723-46-17600	• Plug Assembly	1	90216-
21		07002-11423	• • O-ring	1	90216-
22		07000-11007	• • O-ring	1	90216-

FIG. H0120-008001A Hydraulic Oil Control Valve (3-valve) (1/8)

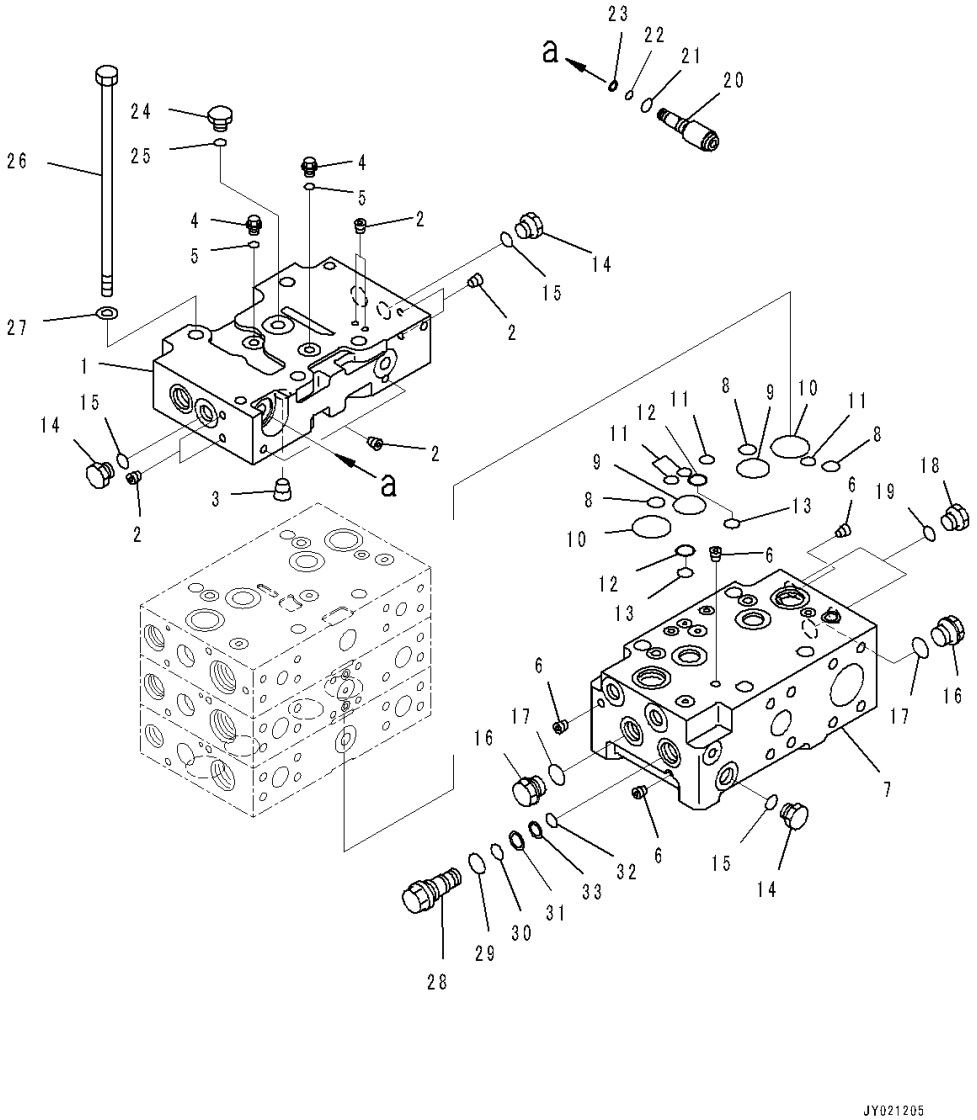

Index	Code	Part Number	Description	Qty	Serial Number
23		07001-01007	• • Ring, Back-up	1	90216-
24		708-8H-11530	• Plug	1	90216-
25		07002-11423	• O-ring	1	90216-
26		723-46-15480	• Bolt	4	90216-
27		01643-31445	• Washer, Flat	4	90216-
28		723-46-15720	• Plug	1	90216-
29		07002-12434	• O-ring	1	90216-
30		07000-12016	• O-ring	1	90216-
31		07001-02016	• Ring, Back-up	1	90216-
32		07000-12014	• O-ring	1	90216-
33		07001-02014	• Ring, Back-up	1	90216-

FIG. H0120-008002 Hydraulic Oil Control Valve (3-valve) (2/8)

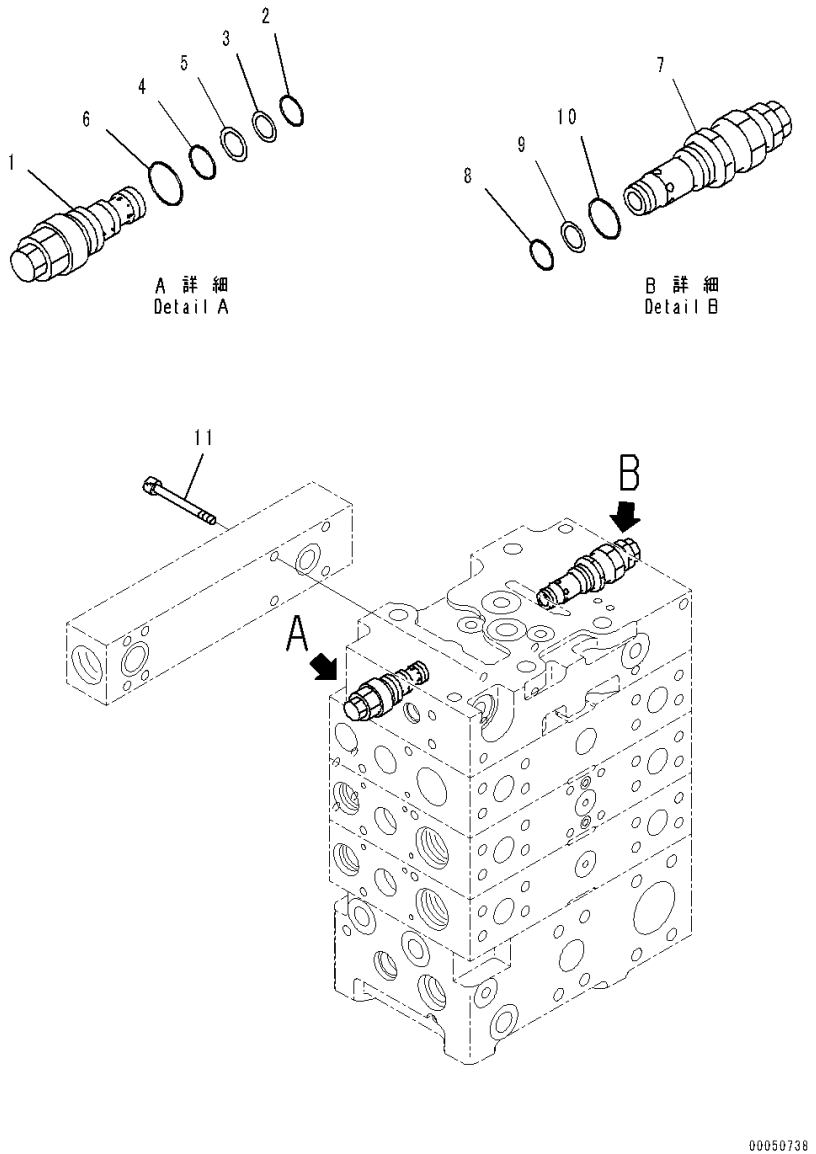

Index	Code	Part Number	Description	Qty	Serial Number
		Note: This list covers following specifications.			
		With 2-Spool Control Valve			
		With 2-Spool Control Valve, ECSS			
		With 2-Spool Control Valve, Brake Oil Cooling System			
		With 2-Spool Control Valve, ECSS, Brake Oil Cooling System			
		723-43-13500	Valve Assembly, Control ..... With 2-Spool Control Valve	1	90216-
		723-43-13400	Valve Assembly, Control ..... With 2-Spool Control Valve, ECSS	1	90216-
		723-43-13500	Valve Assembly, Control ..... With 2-Spool Control Valve, Brake Oil Cooling System	1	90216-
		723-43-13400	Valve Assembly, Control ..... With 2-Spool Control Valve, ECSS, Brake Oil Cooling System	1	90216-
1		723-40-57300	• Valve Assembly, Unloader	1	90216-
2		07000-12014	• • O-ring	1	90216-
3	C1		• • Ring, Back-up	1	90216-
4		07000-12016	• • O-ring	1	90216-
5		723-60-22230	• • Ring, Back-up	1	90216-
6		07002-12434	• • O-ring	1	90216-
7		723-40-93900	• Valve, Relief	1	90216-
8		700-22-11410	• • O-ring	1	90216-
9		700-80-64220	• • Ring, Back-up	1	90216-
10		07002-12434	• • O-ring	1	90216-
11		01252-60860	• Bolt, Hexagon Socket Head	6	90216-

FIG. H0120-008003 Hydraulic Oil Control Valve (3-valve) (3/8)

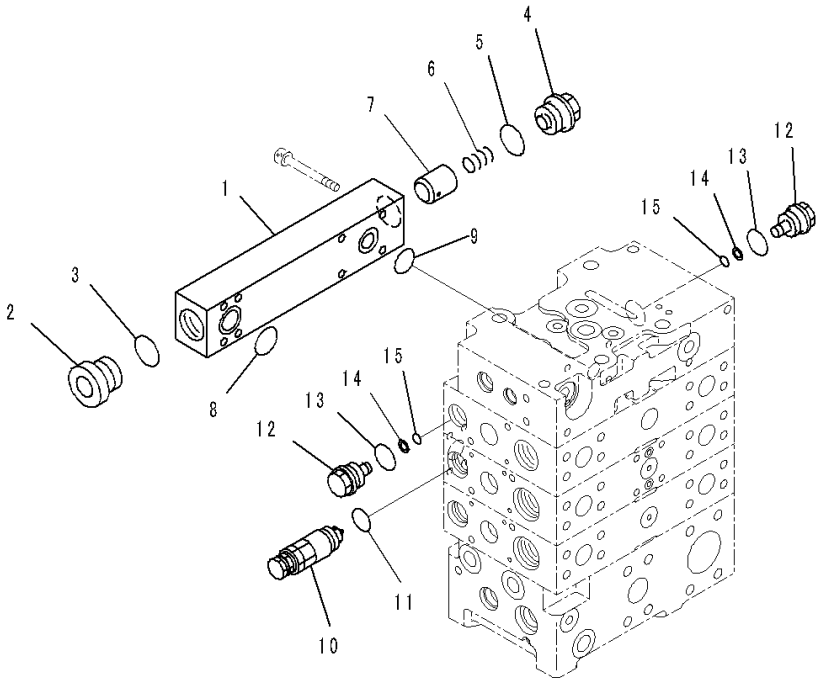

Index	Code	Part Number	Description	Qty	Serial Number
		Note: This list covers following specifications.			
		With 2-Spool Control Valve			
		With 2-Spool Control Valve, ECSS			
		With 2-Spool Control Valve, Brake Oil Cooling System			
		With 2-Spool Control Valve, ECSS, Brake Oil Cooling System			
		723-43-13500	Valve Assembly, Control ..... With 2-Spool Control Valve	1	90216-
		723-43-13400	Valve Assembly, Control ..... With 2-Spool Control Valve, ECSS	1	90216-
		723-43-13500	Valve Assembly, Control ..... With 2-Spool Control Valve, Brake Oil Cooling System	1	90216-
		723-43-13400	Valve Assembly, Control ..... With 2-Spool Control Valve, ECSS, Brake Oil Cooling System	1	90216-
1		723-46-11940	• Block	1	90216-
2	C1		• Plug	1	90216-
3		07002-13334	• O-ring	1	90216-
4		706-75-74850	• Plug	1	90216-
5		07002-13334	• O-ring	1	90216-
6		706-7G-71550	• Spring	1	90216-
7	C1		• Valve	1	90216-
8		723-11-19110	• O-ring	1	90216-
9		723-46-18720	• O-ring	1	90216-
10		723-90-65500	• Valve Assembly, Suction and Relief	1	90216-
11		07002-12434	• • O-ring	1	90216-
12		709-74-91510	• Plug	2	90216-
13		07000-13024	• O-ring	2	90216-
14		07001-01009	• Ring, Back-up	2	90216-
15		07000-11009	• O-ring	2	90216-

FIG. H0120-008004 Hydraulic Oil Control Valve (3-valve) (4/8)

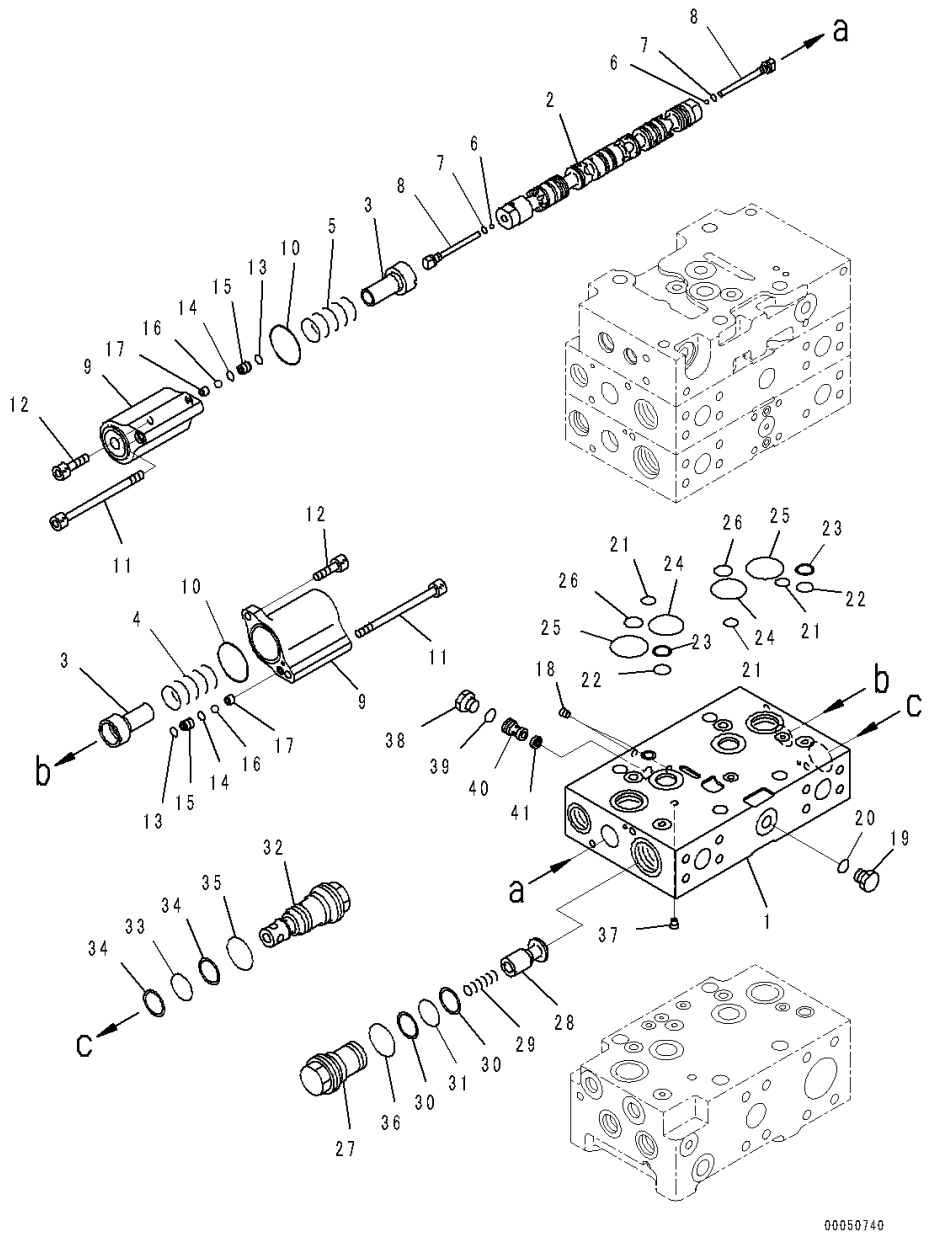

Index	Code	Part Number	Description	Qty	Serial Number
		Note: This list covers following specifications.			
		With 2-Spool Control Valve			
		With 2-Spool Control Valve, ECSS			
		With 2-Spool Control Valve, Brake Oil Cooling System			
		With 2-Spool Control Valve, ECSS, Brake Oil Cooling System			
		723-43-13500	Valve Assembly, Control ..... With 2-Spool Control Valve	1	90216-
		723-43-13400	Valve Assembly, Control ..... With 2-Spool Control Valve, ECSS	1	90216-
		723-43-13500	Valve Assembly, Control ..... With 2-Spool Control Valve, Brake Oil Cooling System	1	90216-
		723-43-13400	Valve Assembly, Control ..... With 2-Spool Control Valve, ECSS, Brake Oil Cooling System	1	90216-
	C1		• Body Subassembly	1	90216-
1	C1		• • Valve Body	1	90216-
2	C1		• • Spool	1	90216-
3		723-46-15120	• • Retainer	2	90216-
4		723-46-14420	• • Spring	1	90216-
5		723-46-14410	• • Spring	1	90216-
6	C1		• • Ball	2	90216-
7	C1		• • O-ring	2	90216-
8	C1		• • Plug	2	90216-
9	C1		• • Case	2	90216-
10		07430-71380	• • O-ring	2	90216-
11		723-46-17350	• • Bolt, Hexagon Socket Head	2	90216-
12		01252-60820	• • Bolt, Hexagon Socket Head	2	90216-
13		702-21-54290	• • O-ring	2	90216-
14		702-21-54330	• • O-ring	2	90216-
15	C1		• • Seat	2	90216-
16	C1		• • Ball	2	90216-
17	C1		• • Seat	2	90216-
18	C1		• • Plug	2	90216-
19		708-8H-11530	• • Plug	1	90216-
20		07002-11423	• • O-ring	1	90216-
21		723-46-17530	• • O-ring	3	90216-
22		723-11-19130	• • O-ring	2	90216-
23		723-46-17520	• • Ring, Back-up	2	90216-

FIG. H0120-008004 Hydraulic Oil Control Valve (3-valve) (4/8)

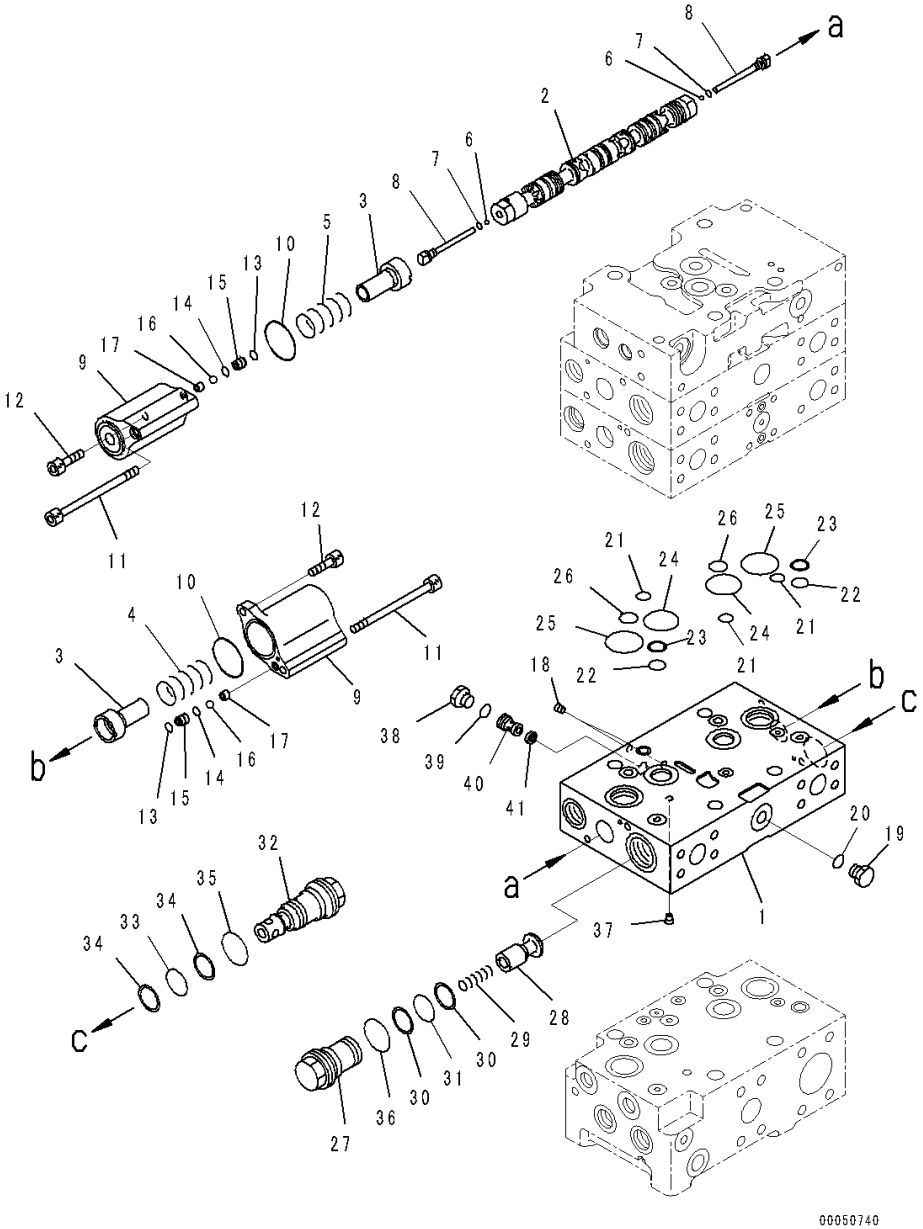

Index	Code	Part Number	Description	Qty	Serial Number
24		723-46-16520	• • O-ring	2	90216-
25		723-46-17510	• • O-ring	2	90216-
26		722-12-19070	• • O-ring	2	90216-
27		723-46-43971	• • Sleeve	1	90216-
28		723-46-43980	• • Valve	1	90216-
29		723-46-44920	• • Spring	1	90216-
30		723-46-41950	• • Ring, Back-up	2	90216-
31		700-93-11320	• • O-ring	1	90216-
32		723-46-43400	• • Valve Assembly	1	90216-
33		700-93-11320	• • • O-ring	1	90216-
34		723-46-41950	• • • Ring, Back-up	2	90216-
35		07002-13634	• • • O-ring	1	90216-
36		07002-13634	• • O-ring	1	90216-
37	C1		• • Orifice	1	90216-
38		708-8H-11530	• • Plug	1	90216-
39		07002-11423	• • O-ring	1	90216-
40		723-46-17550	• • Plug	1	90216-
41		723-40-82220	• • Filter	1	90216-

FIG. H0120-008005 Hydraulic Oil Control Valve (3-valve) (5/8)

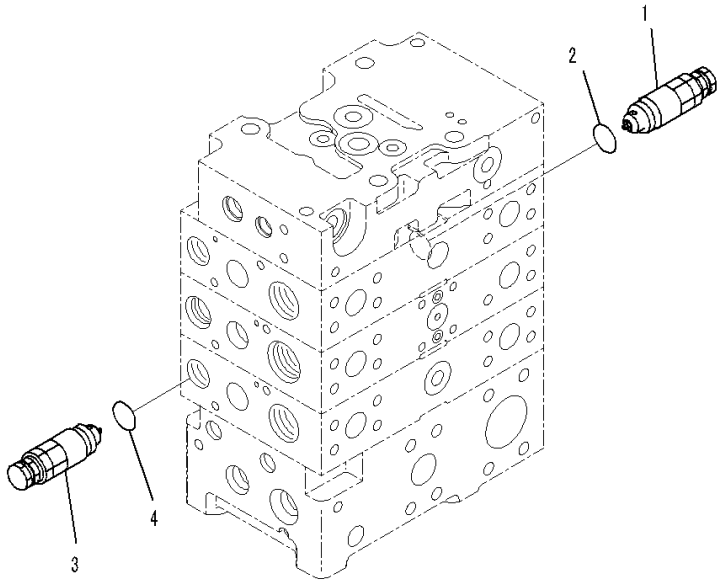

00050741

Index	Code	Part Number	Description	Qty	Serial Number
		Note: This list covers following specifications. With 2-Spool Control Valve With 2-Spool Control Valve, ECSS With 2-Spool Control Valve, Brake Oil Cooling System With 2-Spool Control Valve, ECSS, Brake Oil Cooling System			
		723-43-13500	Valve Assembly, Control ..... With 2-Spool Control Valve	1	90216-
		723-43-13400	Valve Assembly, Control ..... With 2-Spool Control Valve, ECSS	1	90216-
		723-43-13500	Valve Assembly, Control ..... With 2-Spool Control Valve, Brake Oil Cooling System	1	90216-
		723-43-13400	Valve Assembly, Control ..... With 2-Spool Control Valve, ECSS, Brake Oil Cooling System	1	90216-
1		723-40-91200	• Valve Assembly, Suction and Relief	2	90216-
2		709-25-11390	• • O-ring	1	90216-
3		723-90-65400	• Valve Assembly, Suction and Relief	1	90216-
4		07002-12434	• • O-ring	1	90216-

FIG. H0120-008006 Hydraulic Oil Control Valve (3-valve) (6/8)

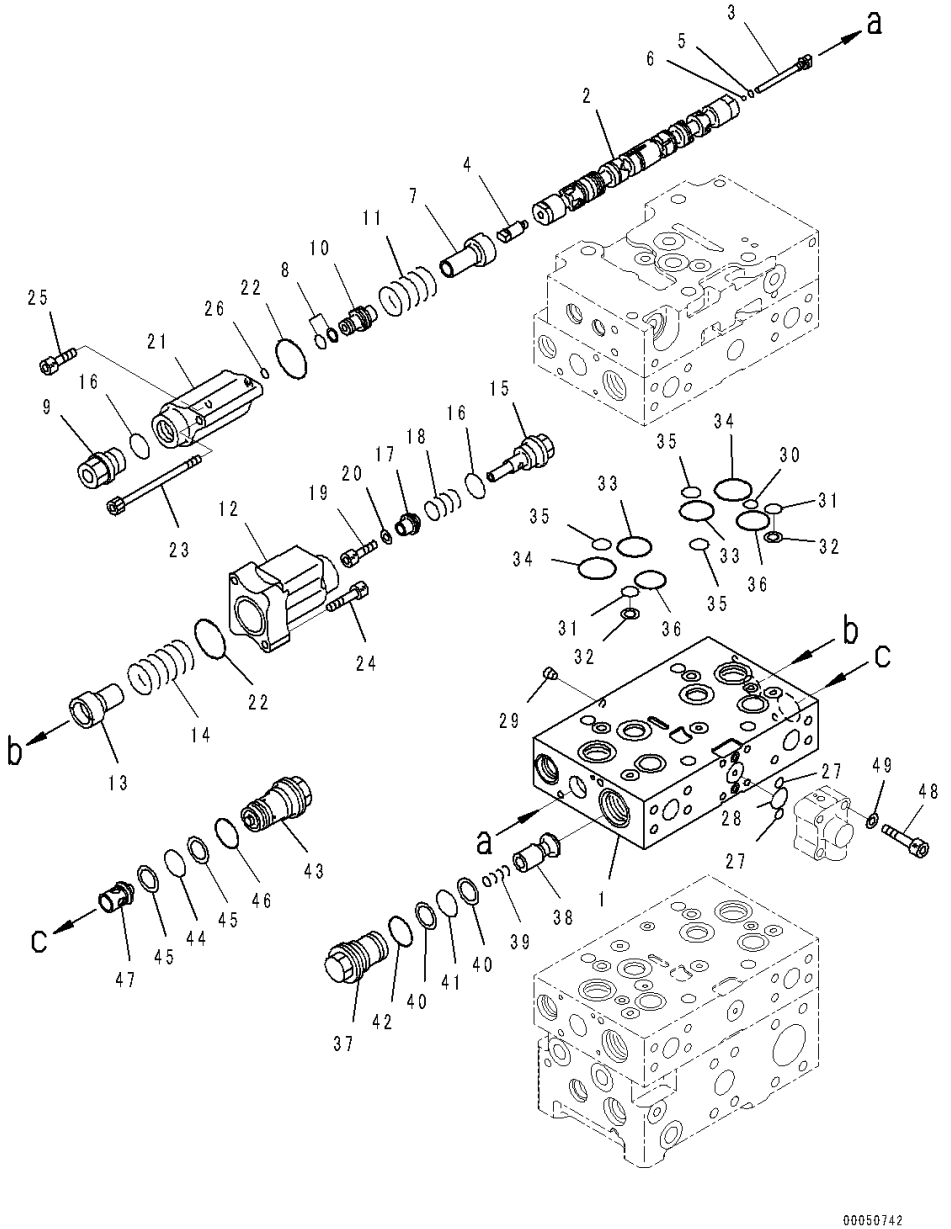

Index	Code	Part Number	Description	Qty	Serial Number
		Note: This list covers following specifications.			
		With 2-Spool Control Valve			
		With 2-Spool Control Valve, ECSS			
		With 2-Spool Control Valve, Brake Oil Cooling System			
		With 2-Spool Control Valve, ECSS, Brake Oil Cooling System			
		723-43-13500	Valve Assembly, Control ..... With 2-Spool Control Valve	1	90216-
		723-43-13400	Valve Assembly, Control ..... With 2-Spool Control Valve, ECSS	1	90216-
		723-43-13500	Valve Assembly, Control ..... With 2-Spool Control Valve, Brake Oil Cooling System	1	90216-
		723-43-13400	Valve Assembly, Control ..... With 2-Spool Control Valve, ECSS, Brake Oil Cooling System	1	90216-
	C1		• Body Subassembly	1	90216-
1	C1		• • Valve Body	1	90216-
2	C1		• • Spool	1	90216-
3		723-46-15130	• • Plug	1	90216-
4		723-46-16940	• • Plug	1	90216-
5		07002-10823	• • O-ring	1	90216-
6	C1		• • Ball	1	90216-
7		723-46-16950	• • Retainer	1	90216-
8		723-46-16920	• • Seal	1	90216-
9		723-46-16910	• • Plug	1	90216-
10		723-46-16930	• • Piston	1	90216-
11		723-46-14410	• • Spring	1	90216-
12		723-46-16860	• • Case	1	90216-
13		723-46-16690	• • Retainer	1	90216-
14		723-46-14430	• • Spring	1	90216-
15		723-46-16890	• • Plug	1	90216-
16		07000-13024	• • O-ring	2	90216-
17		723-46-16710	• • Retainer	1	90216-
18		723-46-14370	• • Spring	1	90216-
19		01252-60616	• • Bolt, Hexagon Socket Head	1	90216-
20		01643-30623	• • Washer	1	90216-
21	C1		• • Case	1	90216-
22		07430-71380	• • O-ring	2	90216-
23		723-46-17350	• • Bolt, Hexagon Socket Head	1	90216-

FIG. H0120-008006 Hydraulic Oil Control Valve (3-valve) (6/8)

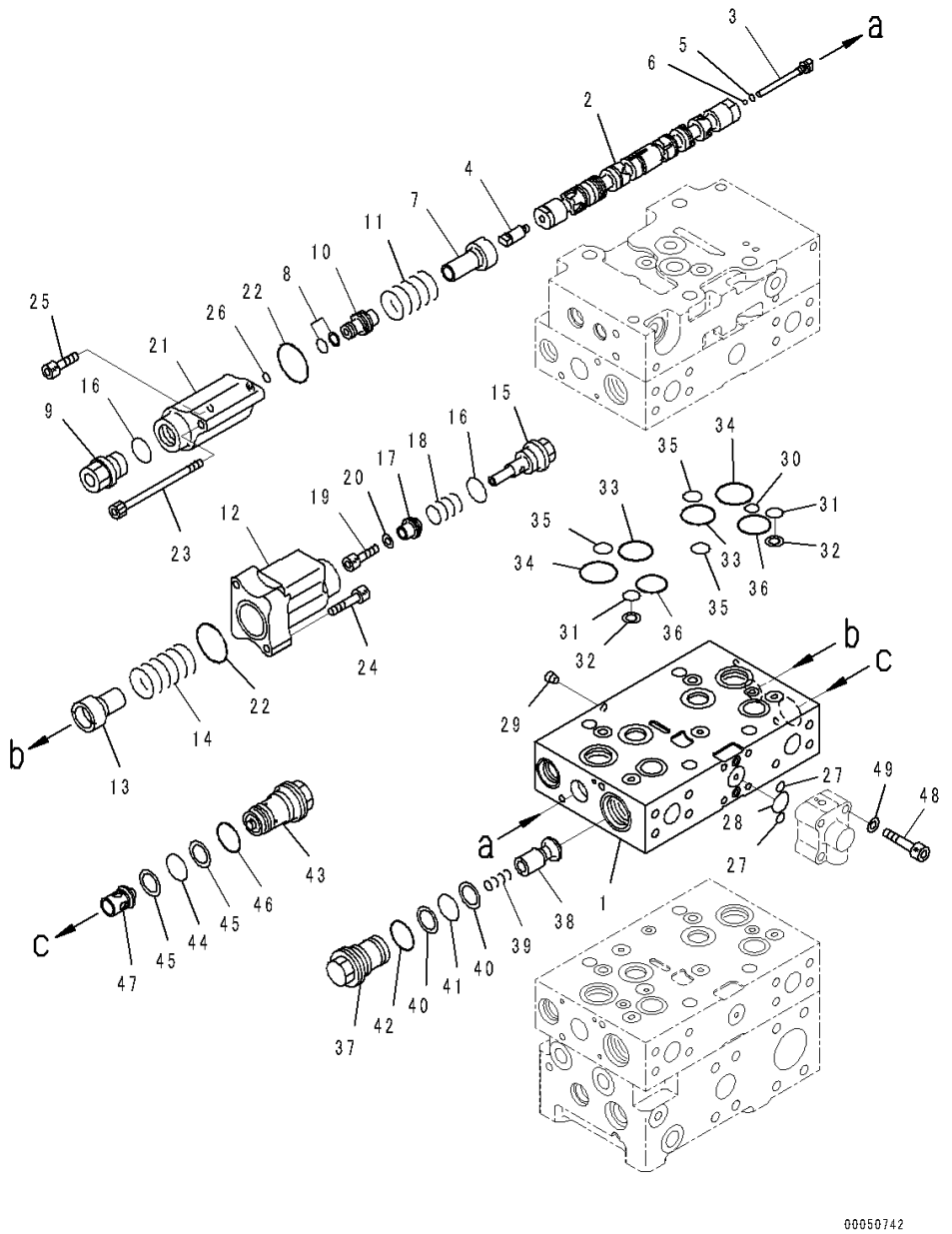

Index	Code	Part Number	Description	Qty	Serial Number
24		01252-60840	• • Bolt, Hexagon Socket Head	2	90216-
25		01252-60820	• • Bolt, Hexagon Socket Head	1	90216-
26		07000-11008	• • O-ring	1	90216-
27		07000-11009	• • O-ring	2	90216-
28		07000-12021	• • O-ring	1	90216-
29	C1		• • Plug	1	90216-
30		723-46-17530	• • O-ring	1	90216-
31		723-11-19130	• • O-ring	2	90216-
32		723-46-17520	• • Ring, Back-up	2	90216-
33		723-46-16520	• • O-ring	2	90216-
34		723-46-17510	• • O-ring	2	90216-
35		722-12-19070	• • O-ring	3	90216-
36		723-26-15830	• • O-ring	2	90216-
37		723-46-43971	• • Sleeve	1	90216-
38		723-46-43980	• • Valve	1	90216-
39		723-46-44920	• • Spring	1	90216-
40		723-46-41950	• • Ring, Back-up	2	90216-
41		700-93-11320	• • O-ring	1	90216-
42		07002-13634	• • O-ring	1	90216-
43		723-46-40100	• • Valve Assembly	1	90216-
44		700-93-11320	• • • O-ring	1	90216-
45		723-46-41950	• • • Ring, Back-up	2	90216-
46		07002-13634	• • • O-ring	1	90216-
47		723-46-41210	• • Valve	1	90216-
48		01252-60845	• • Bolt, Hexagon Socket Head	4	90216-
49		01643-50823	• • Washer	4	90216-

FIG. H0120-008007 Hydraulic Oil Control Valve (3-valve) (7/8)

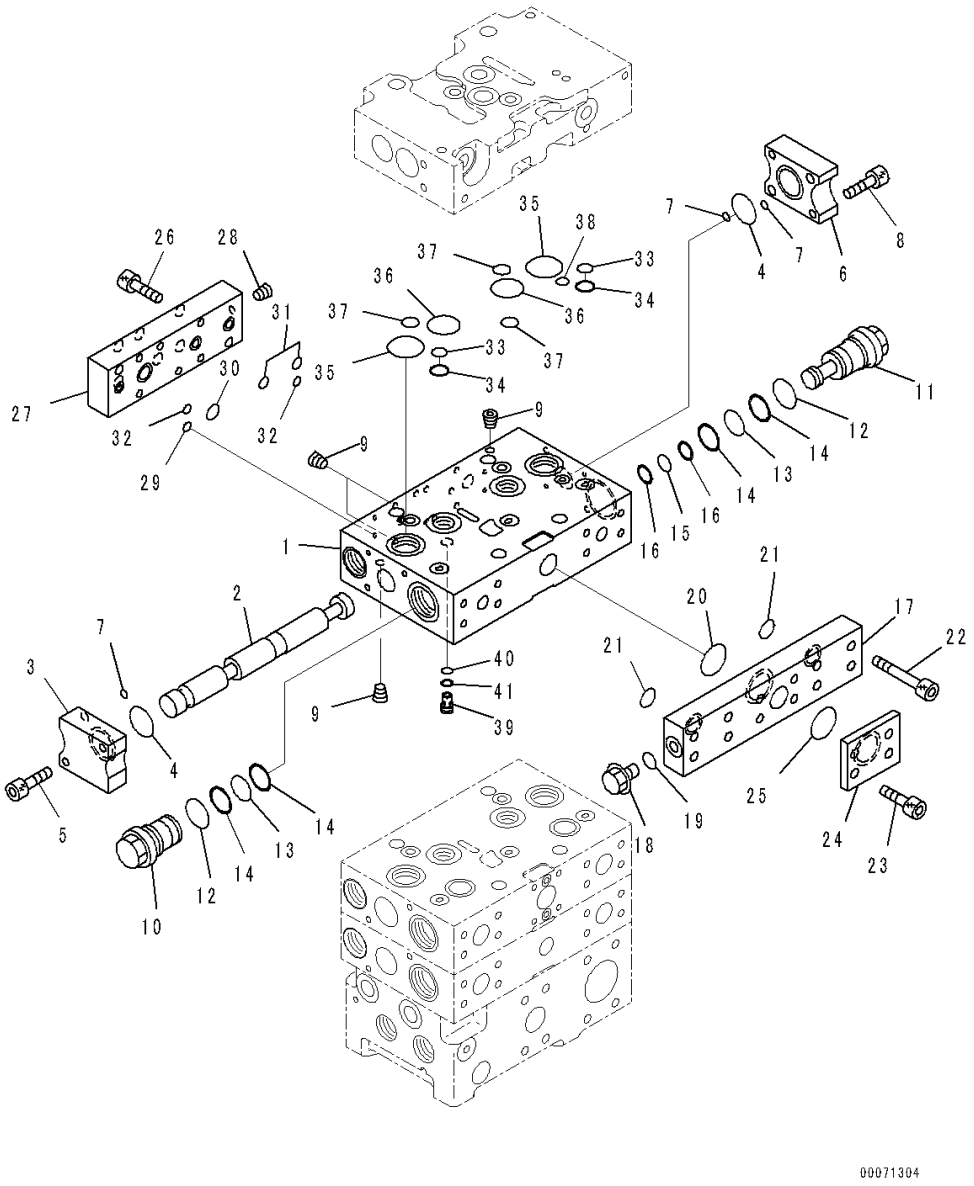

Index	Code	Part Number	Description	Qty	Serial Number
		Note: This list covers following specifications.			
		With 2-Spool Control Valve			
		With 2-Spool Control Valve, Brake Oil Cooling System			
		723-43-13500	Valve Assembly, Control	1	90216-
	C1		• Body Subassembly	1	90216-
1	C1		• • Valve Body, Valve	1	90216-
2	C1		• • Spool	1	90216-
3		723-46-17940	• • Plate	1	90216-
4		07000-13035	• • O-ring	2	90216-
5		01252-60840	• • Bolt, Hexagon Socket Head	2	90216-
6		723-46-16970	• • Plate	1	90216-
7		07000-11008	• • O-ring	3	90216-
8		01252-60840	• • Bolt, Hexagon Socket Head	2	90216-
9	C1		• • Plug	4	90216-
10		723-46-16731	• • Plug	1	90216-
11		723-46-16741	• • Plug	1	90216-
12		07002-13634	• • O-ring	2	90216-
13		700-93-11320	• • O-ring	2	90216-
14		723-46-41950	• • Ring, Back-up	4	90216-
15		07000-12018	• • O-ring	1	90216-
16		07001-02018	• • Ring, Back-up	2	90216-
17		723-46-16750	• • Plate	1	90216-
18		708-8E-16150	• • Plug	1	90216-
19		07002-11023	• • O-ring	1	90216-
20		07000-13035	• • O-ring	1	90216-
21		07000-12021	• • O-ring	2	90216-
22		01252-61045	• • Bolt, Hexagon Socket Head	8	90216-
23		01252-61025	• • Bolt, Hexagon Socket Head	4	90216-
24		723-46-16990	• • Plate	1	90216-
25		07000-12035	• • O-ring	1	90216-
26		01252-60835	• • Bolt, Hexagon Socket Head	6	90216-
27		723-46-16980	• • Plate	1	90216-
28		708-21-12541	• • Plug	1	90216-
29		07000-11010	• • O-ring	1	90216-
30		07000-12018	• • O-ring	1	90216-
31		07000-12012	• • O-ring	2	90216-
32		07000-11008	• • O-ring	2	90216-
33		723-11-19130	• • O-ring	2	90216-
34		723-46-17520	• • Ring, Back-up	2	90216-
35		723-46-17510	• • O-ring	2	90216-

FIG. H0120-008007 Hydraulic Oil Control Valve (3-valve) (7/8)

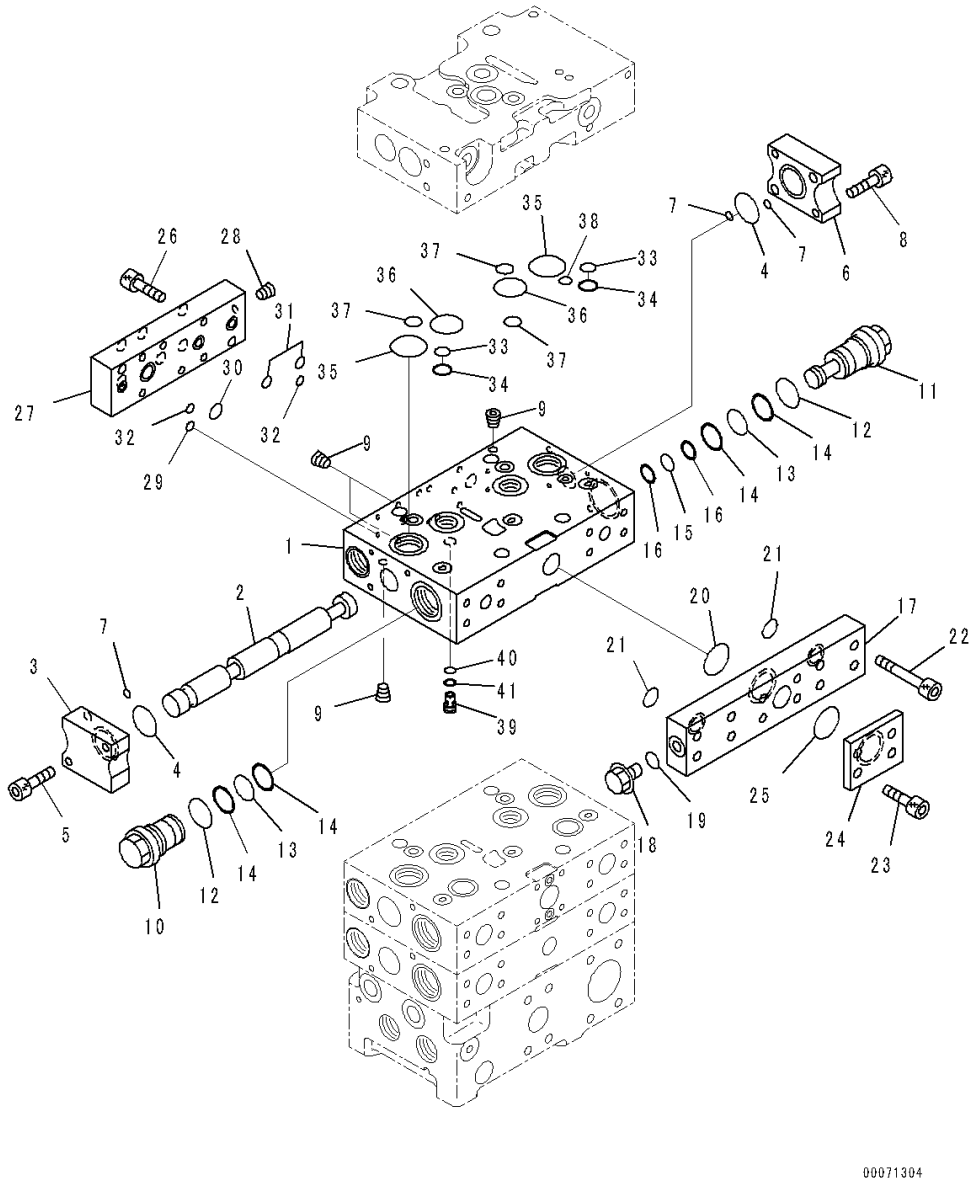

Index	Code	Part Number	Description	Qty	Serial Number
36		723-46-16520	• • O-ring	2	90216-
37		722-12-19070	• • O-ring	3	90216-
38		723-46-17530	• • O-ring	1	90216-
39		723-46-16960	• • Plug	1	90216-
40		07000-11010	• • O-ring	1	90216-
41		07001-01010	• • Ring, Back-up	1	90216-

FIG. H0120-008008 Hydraulic Oil Control Valve (3-valve) (8/8)

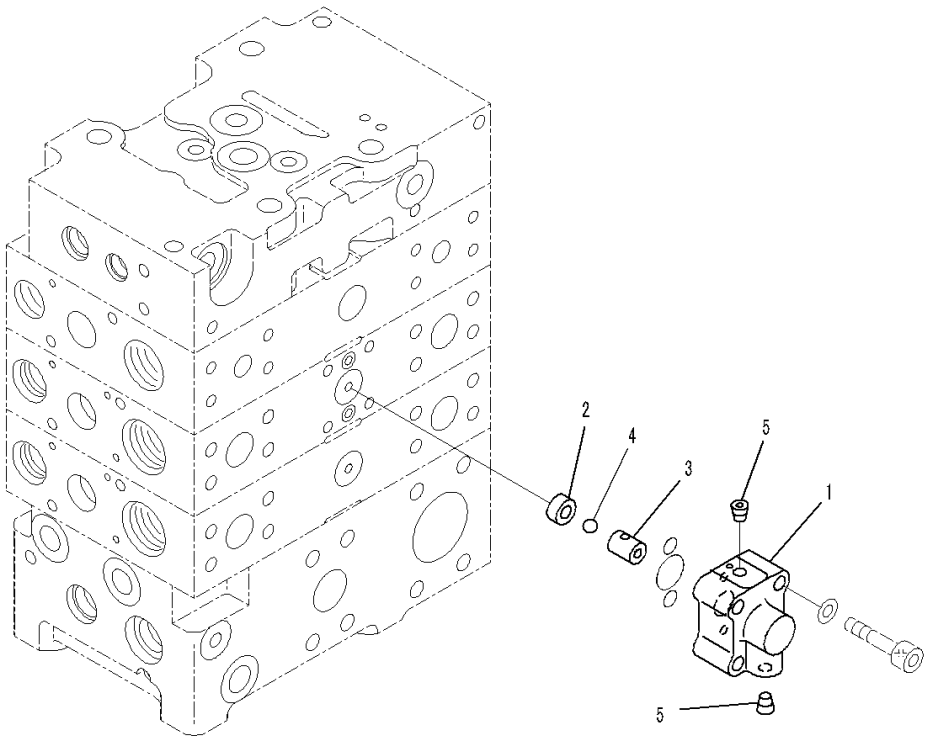

Index	Code	Part Number	Description	Qty	Serial Number
		Note: This list covers following specifications.			
		With 2-Spool Control Valve			
		With 2-Spool Control Valve, ECSS			
		With 2-Spool Control Valve, Brake Oil Cooling System			
		With 2-Spool Control Valve, ECSS, Brake Oil Cooling System			
		723-43-13500	Valve Assembly, Control ..... With 2-Spool Control Valve	1	90216-
		723-43-13400	Valve Assembly, Control ..... With 2-Spool Control Valve, ECSS	1	90216-
		723-43-13500	Valve Assembly, Control ..... With 2-Spool Control Valve, Brake Oil Cooling System	1	90216-
		723-43-13400	Valve Assembly, Control ..... With 2-Spool Control Valve, ECSS, Brake Oil Cooling System	1	90216-
		723-40-66300	• Valve Assembly	1	90216-
1	C1		• • Case	1	90216-
2	C1		• • Seat	1	90216-
3	C1		• • Seat	1	90216-
4	C1		• • Ball	1	90216-
5	C1		• • Plug	2	90216-

FIG. H0120-008009 Hydraulic Oil Control Valve (With 2-Spool Control Valve) (Bracket)

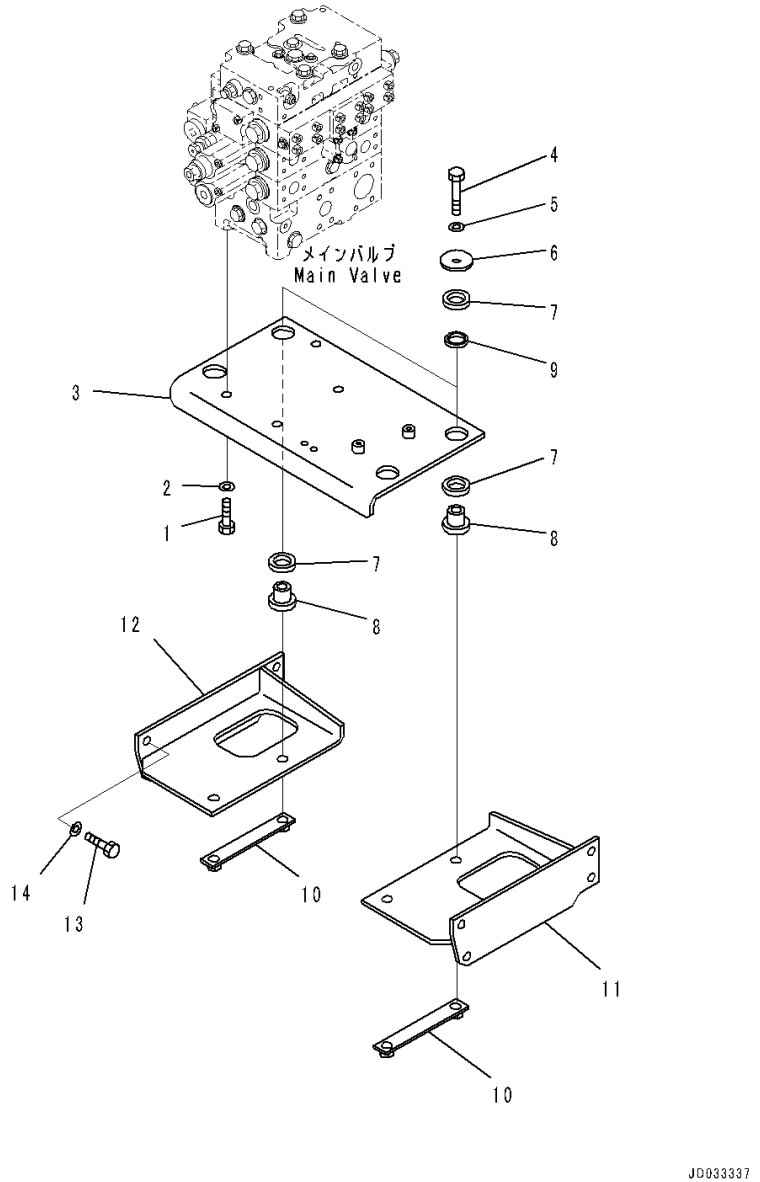

Index	Code	Part Number	Description	Qty	Serial Number
1		01010-81640	Bolt	4	90216-
2		01643-31645	Washer	4	90216-
3		421-64-41110	Bracket	1	90216-
4		01010-81685	Bolt	4	90216-
5		01643-31645	Washer	4	90216-
6		425-70-11290	Washer	4	90216-
7		421-64-23120	Cushion	8	90216-
8		421-64-41140	Boss	4	90216-
9		421-64-23130	Cushion	4	90216-
10		421-64-41150	Bracket	2	90216-
11		421-64-41121	Bracket	1	90216-
12		421-64-41130	Bracket	1	90216-
13		01010-D1635	Bolt	8	90216-
14		01643-71645	Washer	8	90216-

FIG. H0120-008010 Hydraulic Oil Control Valve (Elbow)

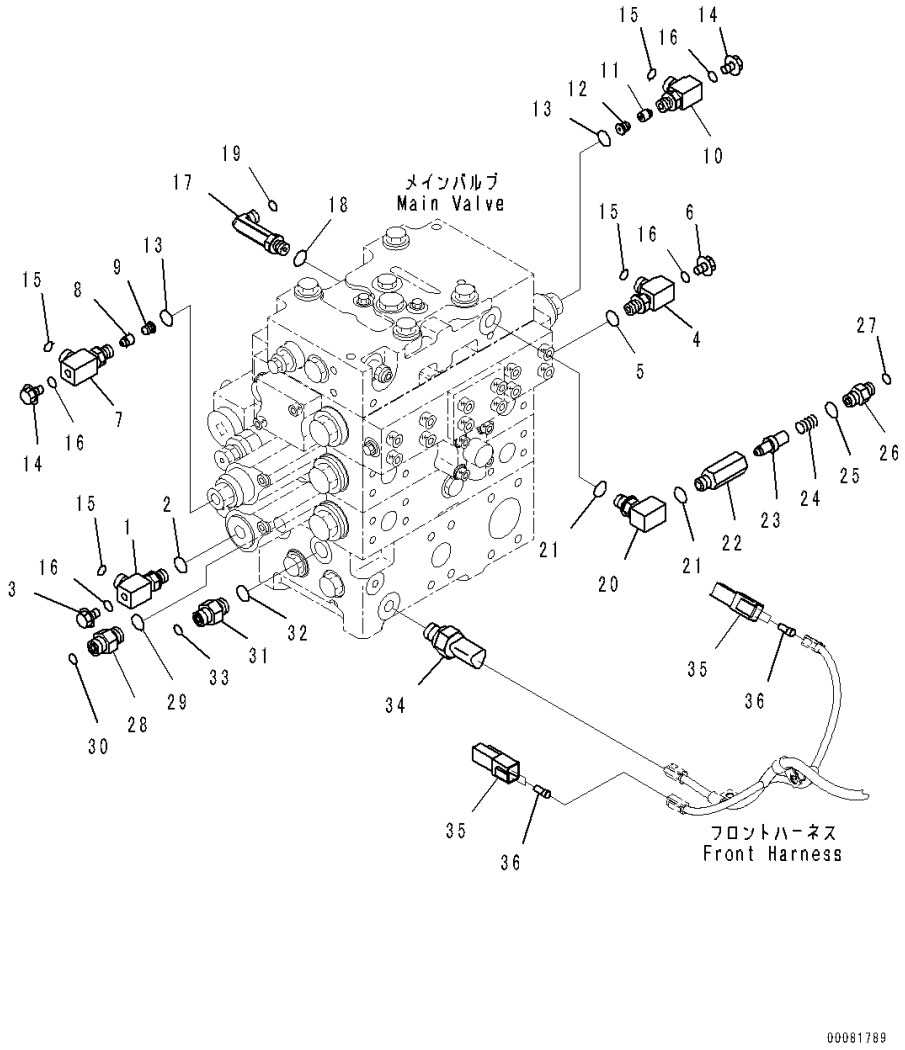

Index	Code	Part Number	Description	Qty	Serial Number
		Note: This list covers following specifications.			
		With 2-Spool Control Valve			
		With 2-Spool Control Valve, Brake Oil Cooling System			
		With 3-Spool Control Valve			
1		423-62-34290	Elbow	1	90216-
2		07002-11423	O-ring	1	90216-
3		423-62-52290	Plug	1	90648-
4		423-62-34290	Elbow	1	90216-
5		07002-11423	O-ring	1	90216-
6		423-62-52290	Plug	1	90648-
		423-62-35440	Valve Assembly	1	90216-
7		418-62-34490	• Elbow	1	90216-
8		203-60-62320	• Poppet	1	90216-
9		423-62-35450	• Plug	1	90216-
		423-62-35440	Valve Assembly	1	90216-
10		418-62-34490	• Elbow	1	90216-
11		203-60-62320	• Poppet	1	90216-
12		423-62-35450	• Plug	1	90216-
13		07002-11423	O-ring	2	90216-
14		423-62-52290	Plug	2	90648-
15		02896-11009	O-ring	4	90216-
16		07002-11023	O-ring	4	90216-
17		02782-10212	Elbow	1	90216-
18		07002-11423	O-ring	1	90216-
19		02896-11008	O-ring	1	90216-
20		20Y-62-23541	Elbow	1	90216-
21		07002-11423	O-ring	2	90216-
		20Y-62-41701	Valve Assembly	1	90216-
22		20Y-60-22210	• Body	1	90216-
23		20Y-60-22270	• Poppet	1	90216-
24		701-20-61230	• Spring	1	90216-
25		07002-11423	• O-ring	1	90216-
26		20Y-62-47630	• Nipple	1	90216-
27		02896-11008	O-ring	1	90216-
28		02781-00313	Union	1	90216-
29		07002-11823	O-ring	1	90216-
30		02896-11009	O-ring	1	90216-
31		02781-00313	Union	1	90216-
32		07002-11823	O-ring	1	90216-
33		02896-11009	O-ring	1	90216-

FIG. H0120-008010 Hydraulic Oil Control Valve (Elbow)

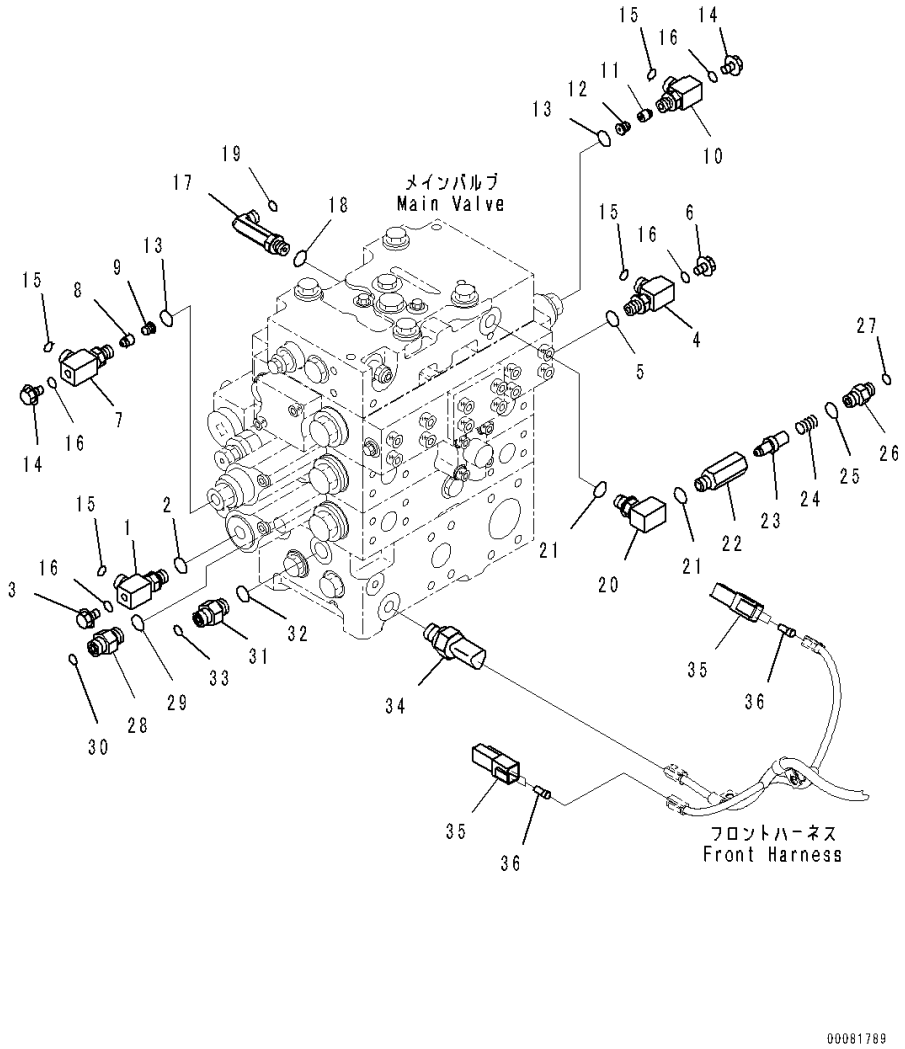

Index	Code	Part Number	Description	Qty	Serial Number
34		7861-93-1653	Sensor	1	91089-
		07002-61823	• O-ring	1	90469-
35	C1		Connector	2	90216-
36		08191-00770	Plug, Connector	4	90216-

FIG. H0120-007007 Hydraulic Oil Control Valve (3-valve) (7/9)

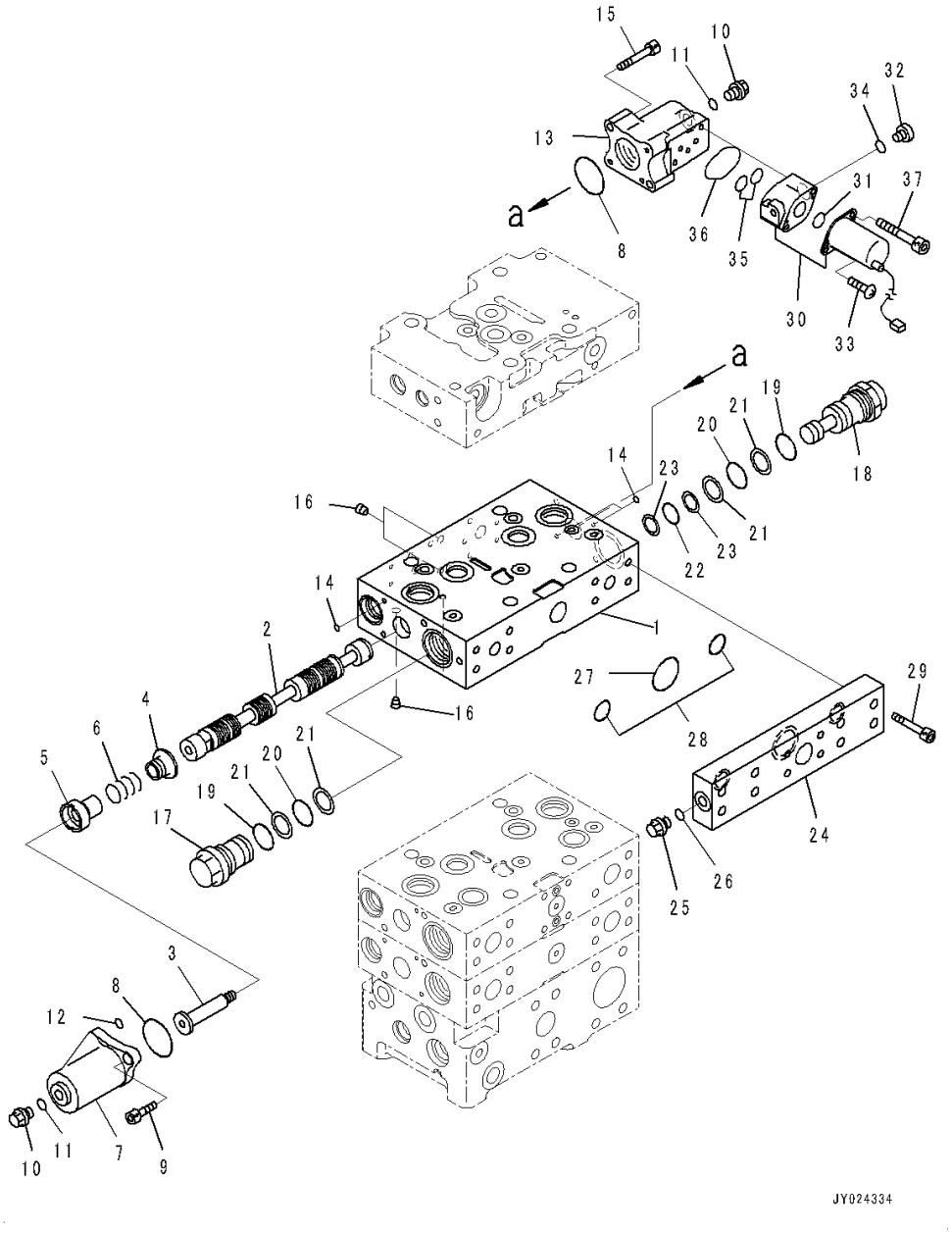

Index	Code	Part Number	Description	Qty	Serial Number
		Note: This list covers following specifications.			
		With 2-Spool Control Valve, ECSS			
		With 2-Spool Control Valve, ECSS, Brake Oil Cooling System			
		723-43-13400	Valve Assembly, Control	1	90216-
	C1		• Body Subassembly	1	90216-
1	C1		• • Valve Body, Valve	1	90216-
2	C1		• • Spool	1	90216-
3		723-46-15390	• • Plug	1	90216-
4		723-46-16720	• • Retainer	1	90216-
5		723-46-15380	• • Retainer	1	90216-
6		723-46-14381	• • Spring	1	90216-
7		723-46-17840	• • Case	1	90216-
8		07430-71380	• • O-ring	2	90216-
9		01252-60820	• • Bolt, Hexagon Socket Head	2	90216-
10		706-73-71450	• • Plug	2	90216-
11		07002-11423	• • O-ring	2	90216-
12		723-11-19960	• • O-ring	1	90216-
13	C1		• • Case	1	90216-
14		07000-11008	• • O-ring	3	90216-
15		01252-60840	• • Bolt, Hexagon Socket Head	2	90216-
16	C1		• • Plug	4	90216-
17		723-46-16731	• • Plug	1	90216-
18		723-46-16741	• • Plug	1	90216-
19		07002-13634	• • O-ring	2	90216-
20		700-93-11320	• • O-ring	2	90216-
21		723-46-41950	• • Ring, Back-up	4	90216-
22		07000-12018	• • O-ring	1	90216-
23		07001-02018	• • Ring, Back-up	2	90216-
24		723-46-16750	• • Plate	1	90216-
25		708-8E-16150	• • Plug	1	90216-
26		07002-11023	• • O-ring	1	90216-
27		07000-13035	• • O-ring	1	90216-
28		07000-12021	• • O-ring	2	90216-
29		01252-61045	• • Bolt, Hexagon Socket Head	8	90216-
30		702-21-07610	• • Valve, Solenoid	1	90216-
31		702-21-53680	• • • O-ring	1	90216-
32		702-21-55620	• • • Plug	1	90216-
33		702-21-53330	• • • Screw	2	90216-
34		07002-11423	• • • O-ring	1	90216-

FIG. H0120-007007 Hydraulic Oil Control Valve (3-valve) (7/9)

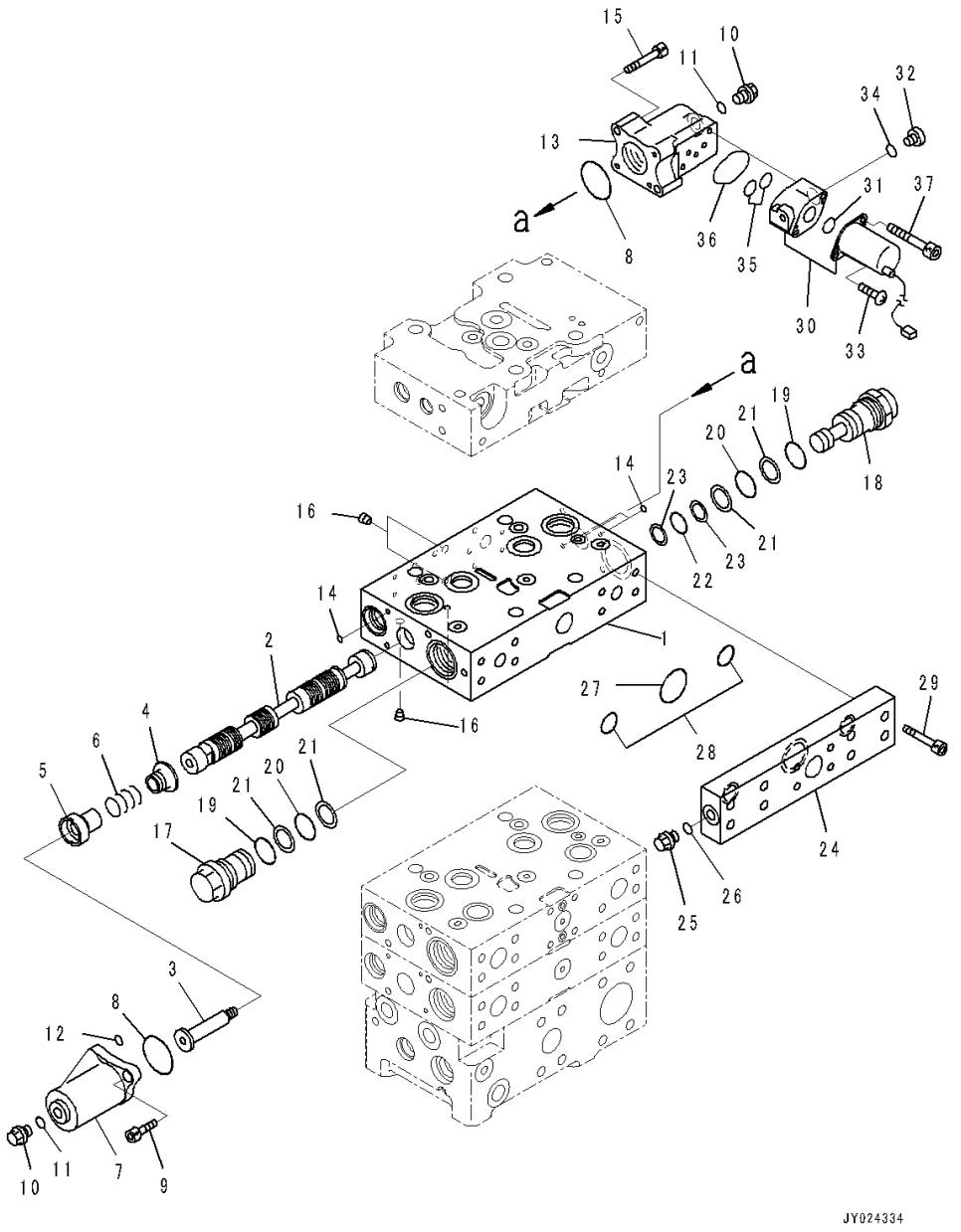

Index	Code	Part Number	Description	Qty	Serial Number
35		700-22-11410	• • O-ring	2	90216-
36		702-21-39450	• • O-ring	1	90216-
37		203-60-62220	• • Bolt	2	90216-

FIG. H0120-007008 Hydraulic Oil Control Valve (3-valve) (8/9)

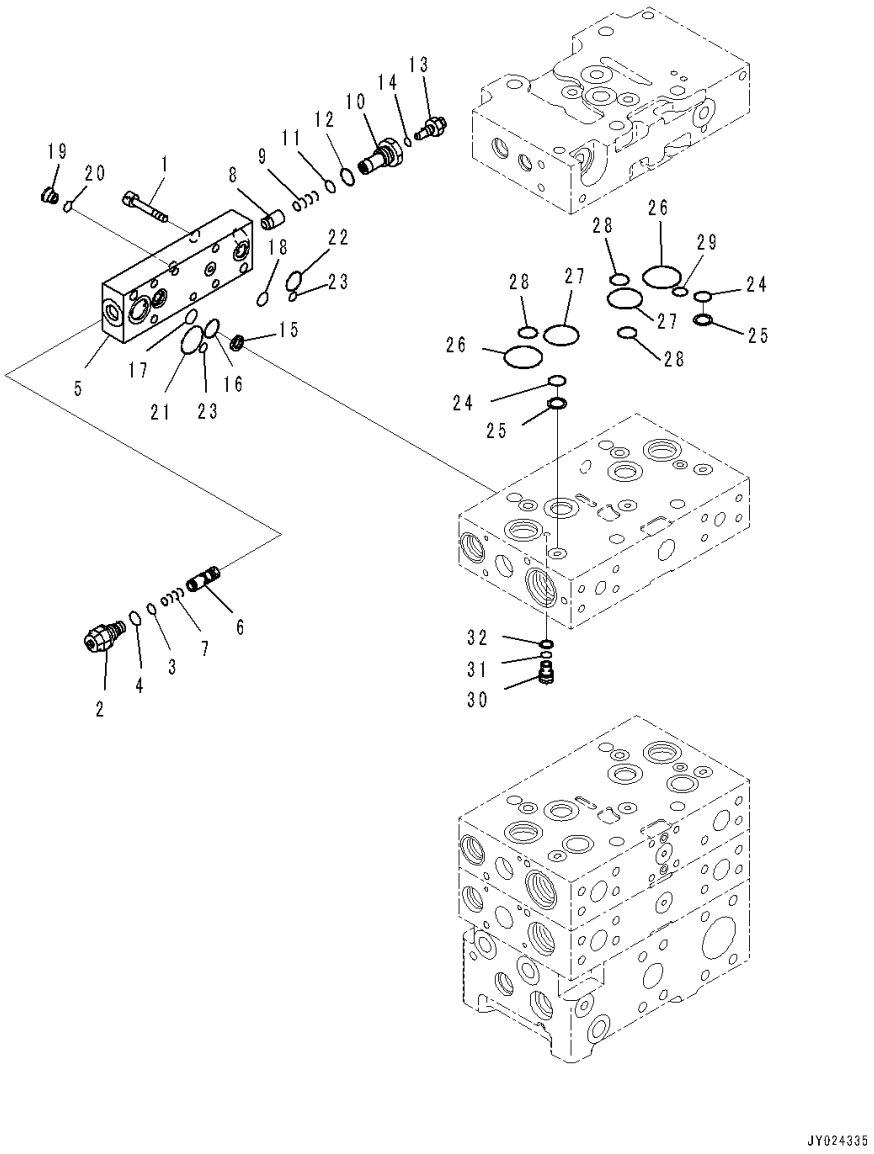

Index	Code	Part Number	Description	Qty	Serial Number
		Note: This list covers following specifications. With 2-Spool Control Valve, ECSS With 2-Spool Control Valve, ECSS, Brake Oil Cooling System			
		723-43-13400	Valve Assembly, Control	1	90216-
	C1		• Body Subassembly	1	90216-
1		01252-60835	• • Bolt, Hexagon Socket Head	6	90216-
		723-40-93400	• • Valve Assembly	1	90216-
2		723-40-93500	• • • Valve, Relief	1	90216-
3		702-16-53920	• • • • O-ring	1	90216-
4		07002-11623	• • • • O-ring	1	90216-
5	C1		• • • Block	1	90216-
6	C1		• • • Spool	1	90216-
7		702-21-55640	• • • Spring	1	90216-
8		723-56-31610	• • • Valve	1	90216-
9		723-56-31620	• • • Spring	1	90216-
10		723-50-61440	• • • Plug	1	90216-
11		07000-12010	• • • O-ring	1	90216-
12		07002-12034	• • • O-ring	1	90216-
13		708-2L-35530	• • • Plug	1	90216-
14		07002-61023	• • • O-ring	1	90216-
15		702-21-53140	• • • Filter	1	90216-
16		702-21-55520	• • • O-ring	1	90216-
17		702-21-55420	• • • O-ring	1	90216-
18		723-46-17530	• • • O-ring	1	90216-
19		723-11-18190	• • • Plug	1	90216-
20		07002-11023	• • • O-ring	1	90216-
21		723-11-19110	• • • O-ring	1	90216-
22		723-46-18710	• • • O-ring	1	90216-
23		07000-11008	• • • O-ring	2	90216-
24		723-11-19130	• • O-ring	2	90216-
25		723-46-17520	• • Ring, Back-up	2	90216-
26		723-46-17510	• • O-ring	2	90216-
27		723-46-16520	• • O-ring	2	90216-
28		722-12-19070	• • O-ring	3	90216-
29		723-46-17530	• • O-ring	1	90216-
30		723-46-16960	• • Plug	1	90216-
31		07000-11010	• • O-ring	1	90216-
32		07001-01010	• • Ring, Back-up	1	90216-

FIG. H0120-007010 Hydraulic Oil Control Valve (With 2-Spool Control Valve, ECSS) (Bracket)

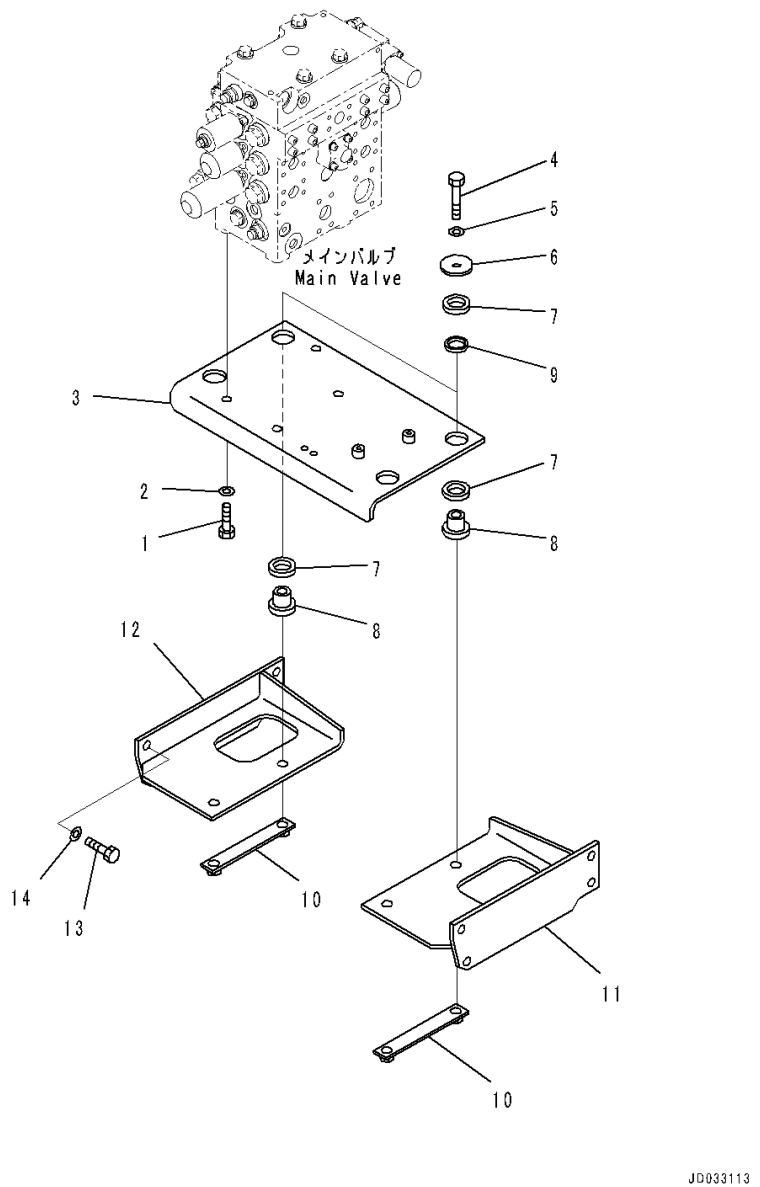

Index	Code	Part Number	Description	Qty	Serial Number
1		01010-81640	Bolt	4	90216-
2		01643-31645	Washer	4	90216-
3		421-64-41110	Bracket	1	90216-
4		01010-81685	Bolt	4	90216-
5		01643-31645	Washer	4	90216-
6		425-70-11290	Washer	4	90216-
7		421-64-23120	Cushion	8	90216-
8		421-64-41140	Boss	4	90216-
9		421-64-23130	Cushion	4	90216-
10		421-64-41150	Bracket	2	90216-
11		421-64-41121	Bracket	1	90216-
12		421-64-41130	Bracket	1	90216-
13		01010-D1635	Bolt	8	90216-
14		01643-71645	Washer	8	90216-

FIG. H0120-007011 Hydraulic Oil Control Valve (Elbow)

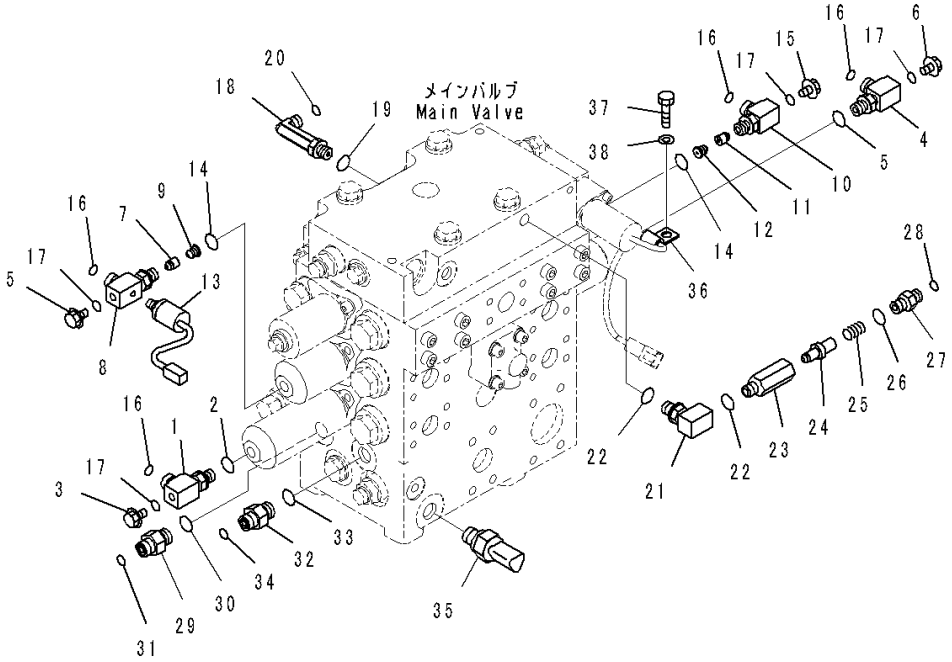

Index	Code	Part Number	Description	Qty	Serial Number
		Note: This list covers following specifications.			
		With 2-Spool Control Valve, ECSS			
		With 2-Spool Control Valve, ECSS, Brake Oil Cooling System			
		With 3-Spool Control Valve, ECSS			
1		423-62-34290	Elbow	1	90216-
2		07002-11423	O-ring	1	90216-
3		423-62-52290	Plug	1	90648-
4		423-62-34290	Elbow	1	90216-
5		07002-11423	O-ring	1	90216-
6		423-62-52290	Plug	1	90648-
		421-62-46450	Valve Assembly	1	90216-
7		203-60-62320	• Poppet	1	90216-
8		421-62-46440	• Elbow	1	90216-
9		423-62-35450	• Plug	1	90216-
		423-62-35440	Valve Assembly	1	90216-
10		418-62-34490	• Elbow	1	90216-
11		203-60-62320	• Poppet	1	90216-
12		423-62-35450	• Plug	1	90216-
13		42C-06-15121	Switch, Pressure	1	90216-
14		07002-11423	O-ring	2	90216-
15		423-62-52290	Plug	2	90648-
16		02896-11009	O-ring	4	90216-
17		07002-11023	O-ring	4	90216-
18		02782-10212	Elbow	1	90216-
19		07002-11423	O-ring	1	90216-
20		02896-11008	O-ring	1	90216-
21		20Y-62-23541	Elbow	1	90216-
22		07002-11423	O-ring	2	90216-
		20Y-62-41701	Valve Assembly	1	90216-
23		20Y-60-22210	• Body	1	90216-
24		20Y-60-22270	• Poppet	1	90216-
25		701-20-61230	• Spring	1	90216-
26		07002-11423	• O-ring	1	90216-
27		20Y-62-47630	• Nipple	1	90216-
28		02896-11008	O-ring	1	90216-
29		02781-00313	Union	1	90216-
30		07002-11823	O-ring	1	90216-
31		02896-11009	O-ring	1	90216-
32		02781-00313	Union	1	90216-

FIG. H0120-007011 Hydraulic Oil Control Valve (Elbow)

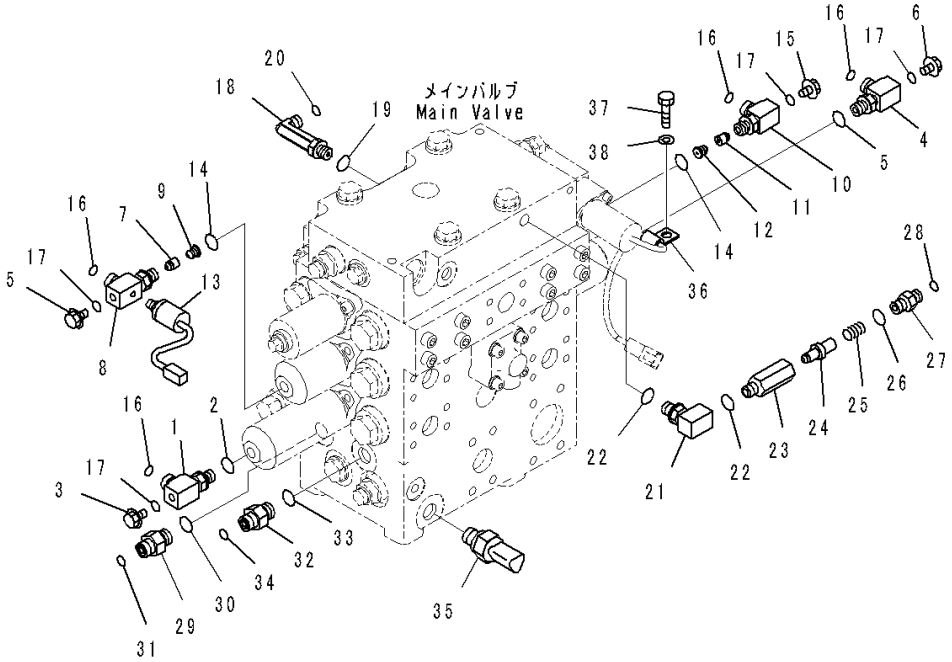

Index	Code	Part Number	Description	Qty	Serial Number
33		07002-11823	O-ring	1	90216-
34		02896-11009	O-ring	1	90216-
35		7861-93-1653	Sensor	1	91089-
		07002-61823	• O-ring	1	90469-
36		04434-50810	Clip	1	90216-
37		01010-81020	Bolt	1	90216-
38		01643-31032	Washer	1	90216-

FIG. H0120-012009 Hydraulic Oil Control Valve (With 2-Spool Control Valve, Brake Oil Cooling System) (Bracket)

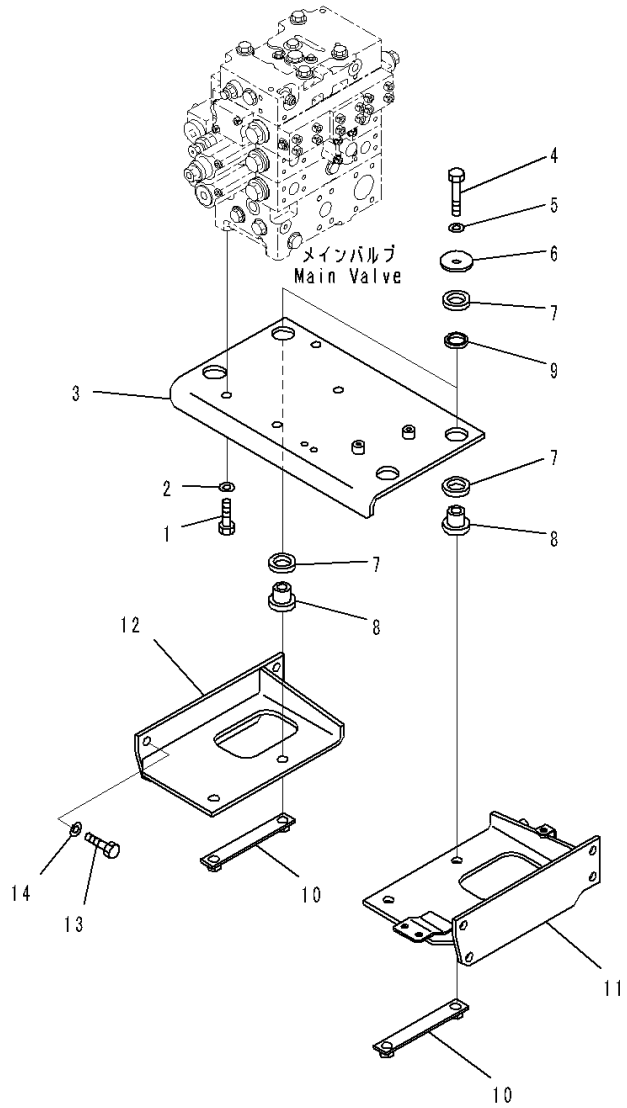

Index	Code	Part Number	Description	Qty	Serial Number
1		01010-81640	Bolt	4	90216-
2		01643-31645	Washer	4	90216-
3		421-64-41110	Bracket	1	90216-
4		01010-81685	Bolt	4	90216-
5		01643-31645	Washer	4	90216-
6		425-70-11290	Washer	4	90216-
7		421-64-23120	Cushion	8	90216-
8		421-64-41140	Boss	4	90216-
9		421-64-23130	Cushion	4	90216-
10		421-64-41150	Bracket	2	90216-
11		421-U44-4510	Bracket	1	90216-
12		421-64-41130	Bracket	1	90216-
13		01010-D1635	Bolt	8	90216-
14		01643-71645	Washer	8	90216-

FIG. H0120-011010 Hydraulic Oil Control Valve (With 2-Spool Control Valve, ECSS, Brake Oil Cooling System) (Bracket)

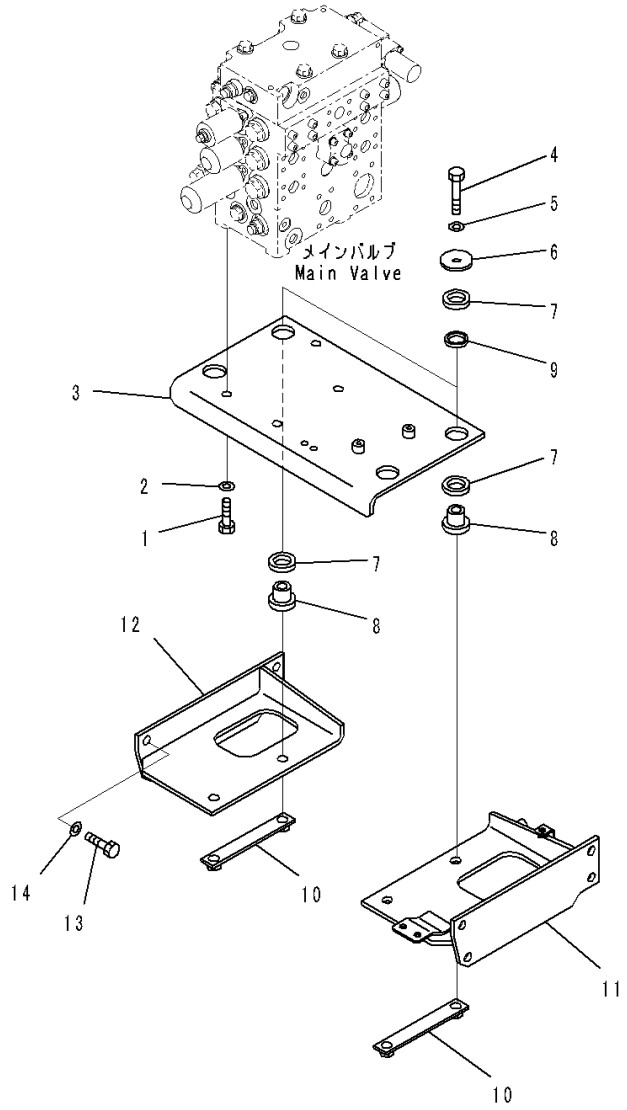

Index	Code	Part Number	Description	Qty	Serial Number
1		01010-81640	Bolt	4	90216-
2		01643-31645	Washer	4	90216-
3		421-64-41110	Bracket	1	90216-
4		01010-81685	Bolt	4	90216-
5		01643-31645	Washer	4	90216-
6		425-70-11290	Washer	4	90216-
7		421-64-23120	Cushion	8	90216-
8		421-64-41140	Boss	4	90216-
9		421-64-23130	Cushion	4	90216-
10		421-64-41150	Bracket	2	90216-
11		421-U44-4510	Bracket	1	90216-
12		421-64-41130	Bracket	1	90216-
13		01010-D1635	Bolt	8	90216-
14		01643-71645	Washer	8	90216-

FIG. H0120-010001A Hydraulic Oil Control Valve (4-valve) (1/10)

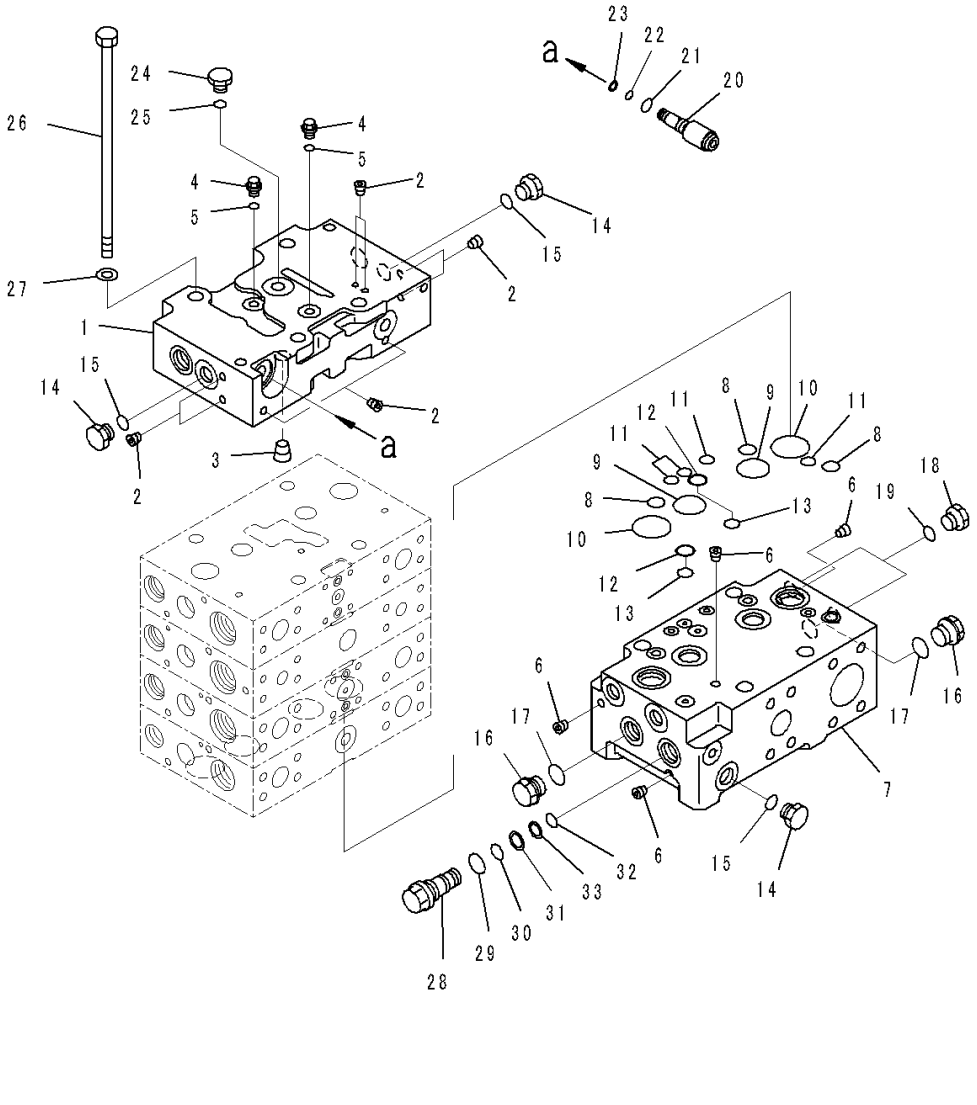

Index	Code	Part Number	Description	Qty	Serial Number
		Note: This list covers following specifications.			
		With 3-Spool Control Valve			
		With 3-Spool Control Valve, ECSS			
		723-44-13500	Valve Assembly, Control	1	90216-
			With 3-Spool Control Valve		
		723-44-13400	Valve Assembly, Control	1	90216-
			With 3-Spool Control Valve, ECSS		
		723-46-00931	• Cover Assembly	1	90838-
1	C1		• • Cover	1	90838-
2	C1		• • Plug	8	90216-
3	C1		• • Plug	1	90216-
4		708-8E-16150	• Plug	2	90216-
5		07002-11023	• O-ring	2	90216-
		723-46-00940	• Cover Assembly	1	90216-
6	C1		• • Plug	4	90216-
7	C1		• • Cover	1	90216-
8		722-12-19070	• O-ring	3	90216-
9		723-46-16520	• O-ring	2	90216-
10		723-46-17510	• O-ring	2	90216-
11		723-46-17530	• O-ring	4	90216-
12		723-46-17520	• Ring, Back-up	2	90216-
13		723-11-19130	• O-ring	2	90216-
14		708-8E-16250	• Plug	3	90216-
15		07002-11823	• O-ring	3	90216-
16		709-74-91860	• Plug	2	90216-
17	C1		• O-ring	2	90216-
18		708-8E-16250	• Plug	2	90838-
19		07002-11823	• O-ring	2	90838-
20		723-46-17600	• Plug Assembly	1	90216-
21		07002-11423	• • O-ring	1	90216-
22		07000-11007	• • O-ring	1	90216-
23		07001-01007	• • Ring, Back-up	1	90216-
24		708-8H-11530	• Plug	1	90216-
25		07002-11423	• O-ring	1	90216-
26		723-46-15490	• Bolt	4	90216-
27		01643-31445	• Washer, Flat	4	90216-
28		723-46-15720	• Plug	1	90216-
29		07002-12434	• O-ring	1	90216-
30		07000-12016	• O-ring	1	90216-
31		07001-02016	• Ring, Back-up	1	90216-

FIG. H0120-010001A Hydraulic Oil Control Valve (4-valve) (1/10)

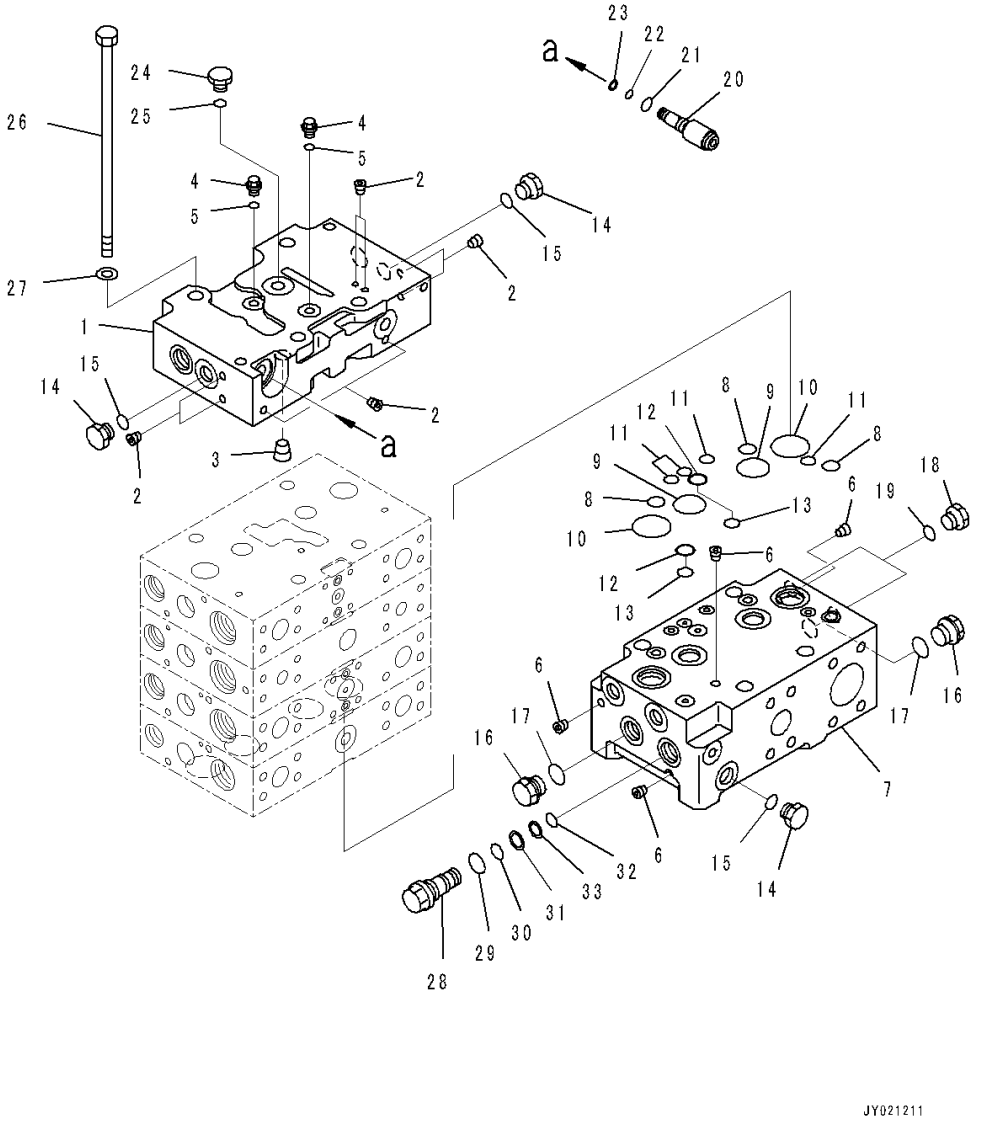

Index	Code	Part Number	Description	Qty	Serial Number
32		07000-12014	• O-ring	1	90216-
33		07001-02014	• Ring, Back-up	1	90216-

FIG. H0120-010002 Hydraulic Oil Control Valve (4-valve) (2/10)

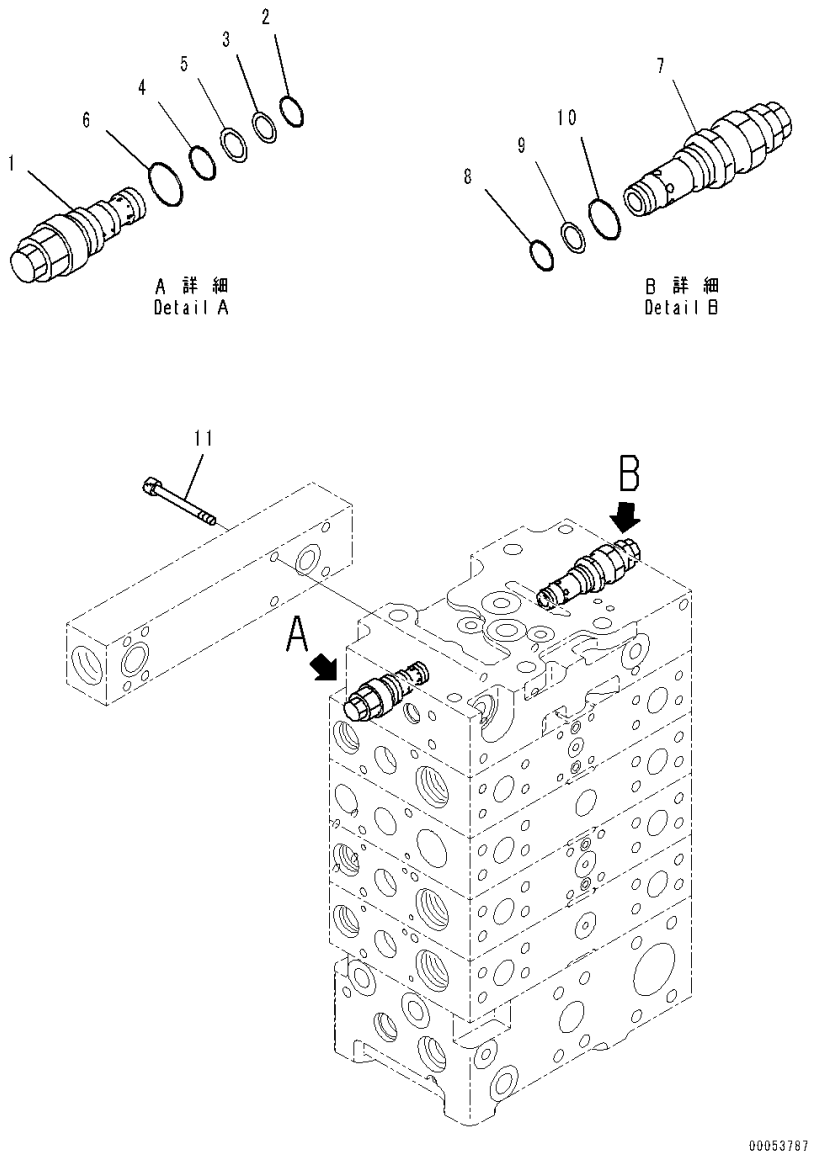

Index	Code	Part Number	Description	Qty	Serial Number
		Note: This list covers following specifications.			
		With 3-Spool Control Valve			
		With 3-Spool Control Valve, ECSS			
		723-44-13500	Valve Assembly, Control	1	90216-
			With 3-Spool Control Valve		
		723-44-13400	Valve Assembly, Control	1	90216-
			With 3-Spool Control Valve, ECSS		
1		723-40-57300	• Valve Assembly, Unloader	1	90216-
2		07000-12014	• • O-ring	1	90216-
3	C1		• • Ring, Back-up	1	90216-
4		07000-12016	• • O-ring	1	90216-
5		723-60-22230	• • Ring, Back-up	1	90216-
6		07002-12434	• • O-ring	1	90216-
7		723-40-93900	• Valve, Relief	1	90216-
8		700-22-11410	• • O-ring	1	90216-
9		700-80-64220	• • Ring, Back-up	1	90216-
10		07002-12434	• • O-ring	1	90216-
11		01252-60860	• Bolt, Hexagon Socket Head	6	90216-

FIG. H0120-010003 Hydraulic Oil Control Valve (4-valve) (3/10)

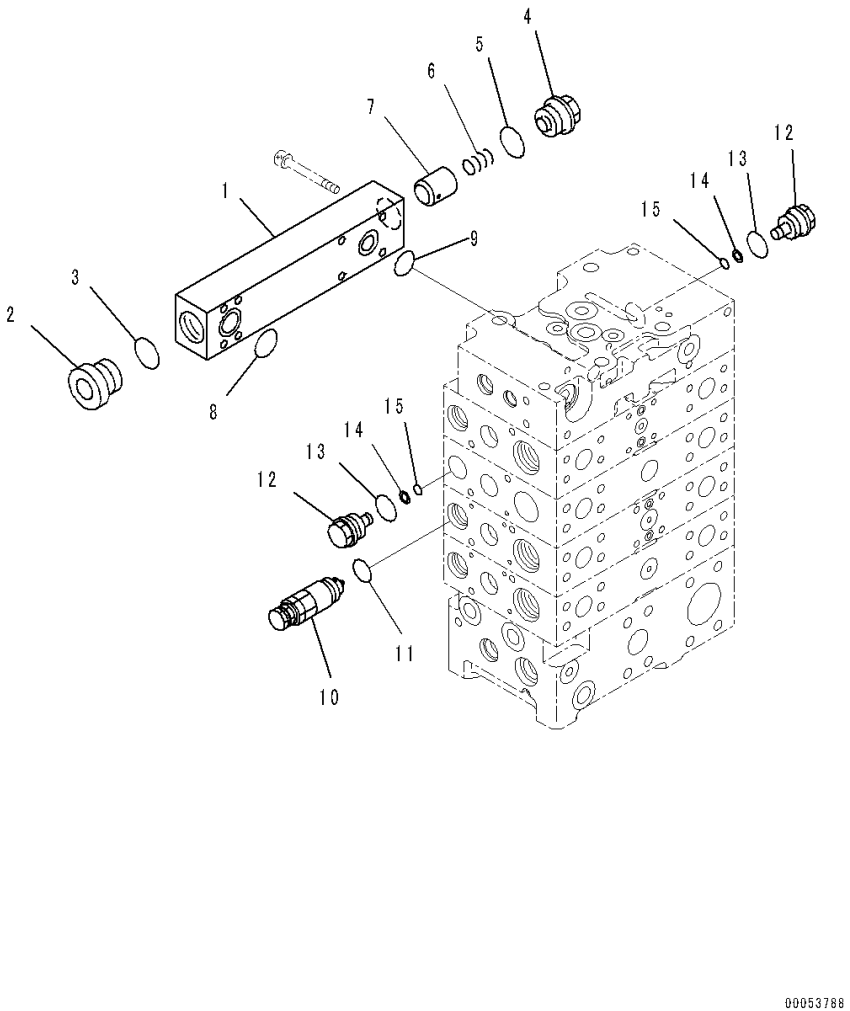

Index	Code	Part Number	Description	Qty	Serial Number
		Note: This list covers following specifications.			
		With 3-Spool Control Valve			
		With 3-Spool Control Valve, ECSS			
		723-44-13500	Valve Assembly, Control	1	90216-
			With 3-Spool Control Valve		
		723-44-13400	Valve Assembly, Control	1	90216-
			With 3-Spool Control Valve, ECSS		
1		723-46-11940	• Block	1	90216-
2	C1		• Plug	1	90216-
3		07002-13334	• O-ring	1	90216-
4		706-75-74850	• Plug	1	90216-
5		07002-13334	• O-ring	1	90216-
6		706-7G-71550	• Spring	1	90216-
7	C1		• Valve	1	90216-
8		723-11-19110	• O-ring	1	90216-
9		723-46-18720	• O-ring	1	90216-
10		723-90-65500	• Valve Assembly, Suction and Relief	1	90216-
11		07002-12434	• • O-ring	1	90216-
12		709-74-91510	• Plug	2	90216-
13		07000-13024	• O-ring	2	90216-
14		07001-01009	• Ring, Back-up	2	90216-
15		07000-11009	• O-ring	2	90216-

FIG. H0120-010004 Hydraulic Oil Control Valve (4-valve) (4/10)

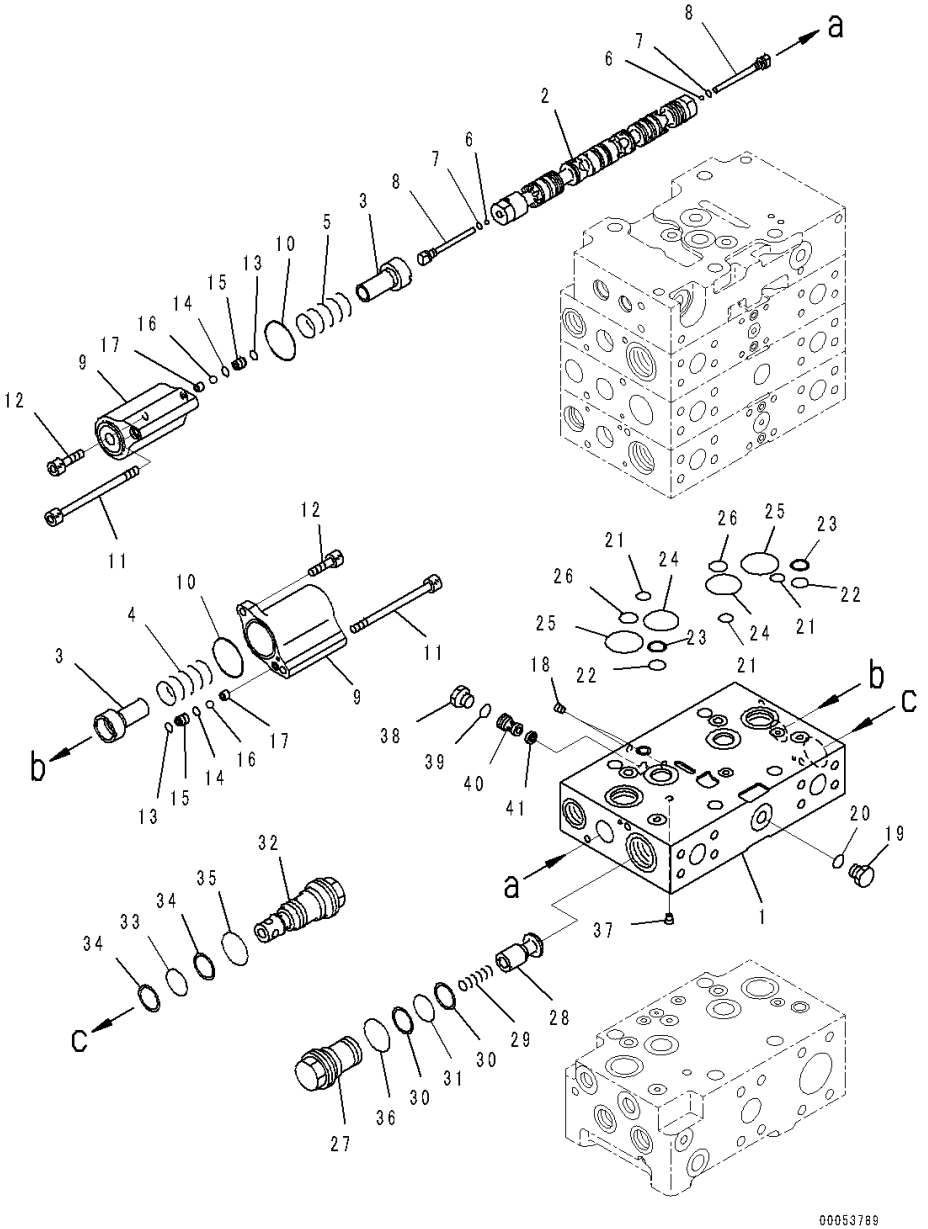

Index	Code	Part Number	Description	Qty	Serial Number
		Note: This list covers following specifications.			
		With 3-Spool Control Valve			
		With 3-Spool Control Valve, ECSS			
		723-44-13500	Valve Assembly, Control	1	90216-
			With 3-Spool Control Valve		
		723-44-13400	Valve Assembly, Control	1	90216-
			With 3-Spool Control Valve, ECSS		
	C1		• Body Subassembly	1	90216-
1	C1		• • Valve Body	1	90216-
2	C1		• • Spool	1	90216-
3		723-46-15120	• • Retainer	2	90216-
4		723-46-14420	• • Spring	1	90216-
5		723-46-14410	• • Spring	1	90216-
6	C1		• • Ball	2	90216-
7	C1		• • O-ring	2	90216-
8	C1		• • Plug	2	90216-
9	C1		• • Case	2	90216-
10		07430-71380	• • O-ring	2	90216-
11		723-46-17350	• • Bolt, Hexagon Socket Head	2	90216-
12		01252-60820	• • Bolt, Hexagon Socket Head	2	90216-
13		702-21-54290	• • O-ring	2	90216-
14		702-21-54330	• • O-ring	2	90216-
15	C1		• • Seat	2	90216-
16	C1		• • Ball	2	90216-
17	C1		• • Seat	2	90216-
18	C1		• • Plug	2	90216-
19		708-8H-11530	• • Plug	1	90216-
20		07002-11423	• • O-ring	1	90216-
21		723-46-17530	• • O-ring	3	90216-
22		723-11-19130	• • O-ring	2	90216-
23		723-46-17520	• • Ring, Back-up	2	90216-
24		723-46-16520	• • O-ring	2	90216-
25		723-46-17510	• • O-ring	2	90216-
26		722-12-19070	• • O-ring	2	90216-
27		723-46-43971	• • Sleeve	1	90216-
28		723-46-43980	• • Valve	1	90216-
29		723-46-44920	• • Spring	1	90216-
30		723-46-41950	• • Ring, Back-up	2	90216-
31		700-93-11320	• • O-ring	1	90216-
32		723-46-43400	• • Valve Assembly	1	90216-

FIG. H0120-010004 Hydraulic Oil Control Valve (4-valve) (4/10)

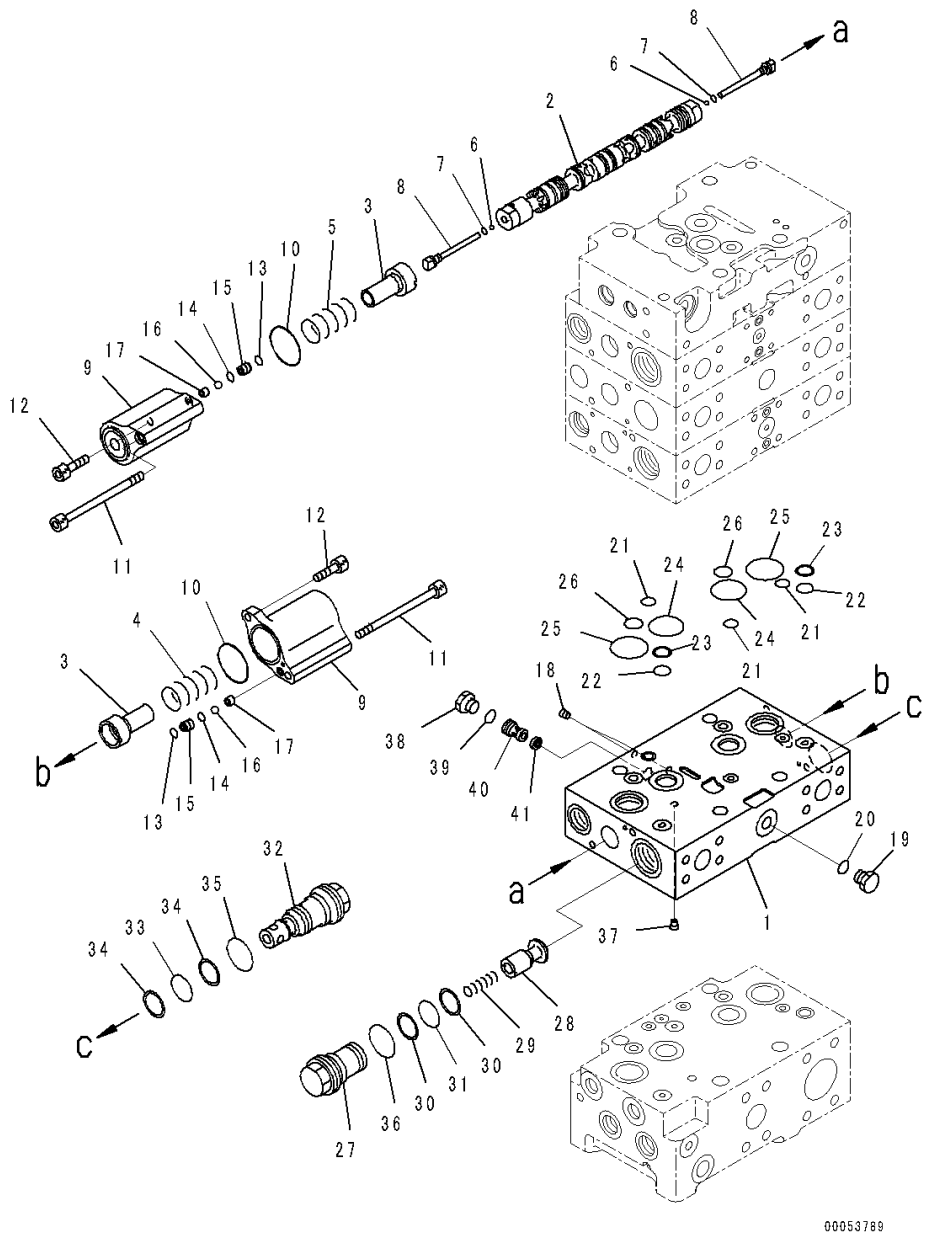

Index	Code	Part Number	Description	Qty	Serial Number
33		700-93-11320	• • • O-ring	1	90216-
34		723-46-41950	• • • Ring, Back-up	2	90216-
35		07002-13634	• • • O-ring	1	90216-
36		07002-13634	• • O-ring	1	90216-
37	C1		• • Orifice	1	90216-
38		708-8H-11530	• • Plug	1	90216-
39		07002-11423	• • O-ring	1	90216-
40		723-46-17550	• • Plug	1	90216-
41		723-40-82220	• • Filter	1	90216-

FIG. H0120-010005 Hydraulic Oil Control Valve (4-valve) (5/10)

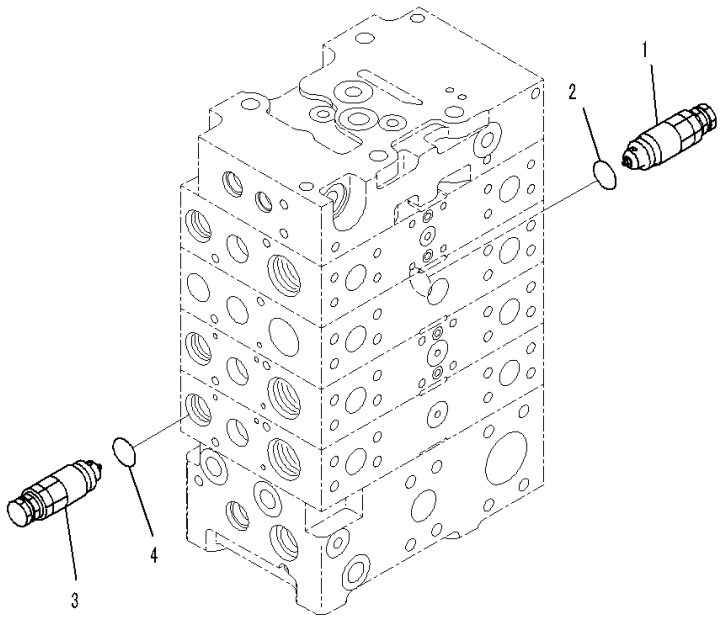

Index	Code	Part Number	Description	Qty	Serial Number
		Note: This list covers following specifications.			
		With 3-Spool Control Valve			
		With 3-Spool Control Valve, ECSS			
		723-44-13500	Valve Assembly, Control	1	90216-
			With 3-Spool Control Valve		
		723-44-13400	Valve Assembly, Control	1	90216-
			With 3-Spool Control Valve, ECSS		
1		723-40-91200	• Valve Assembly, Suction and Relief	2	90216-
2		709-25-11390	• • O-ring	1	90216-
3		723-90-65400	• Valve Assembly, Suction and Relief	1	90216-
4		07002-12434	• • O-ring	1	90216-

FIG. H0120-010006 Hydraulic Oil Control Valve (4-valve) (6/10)

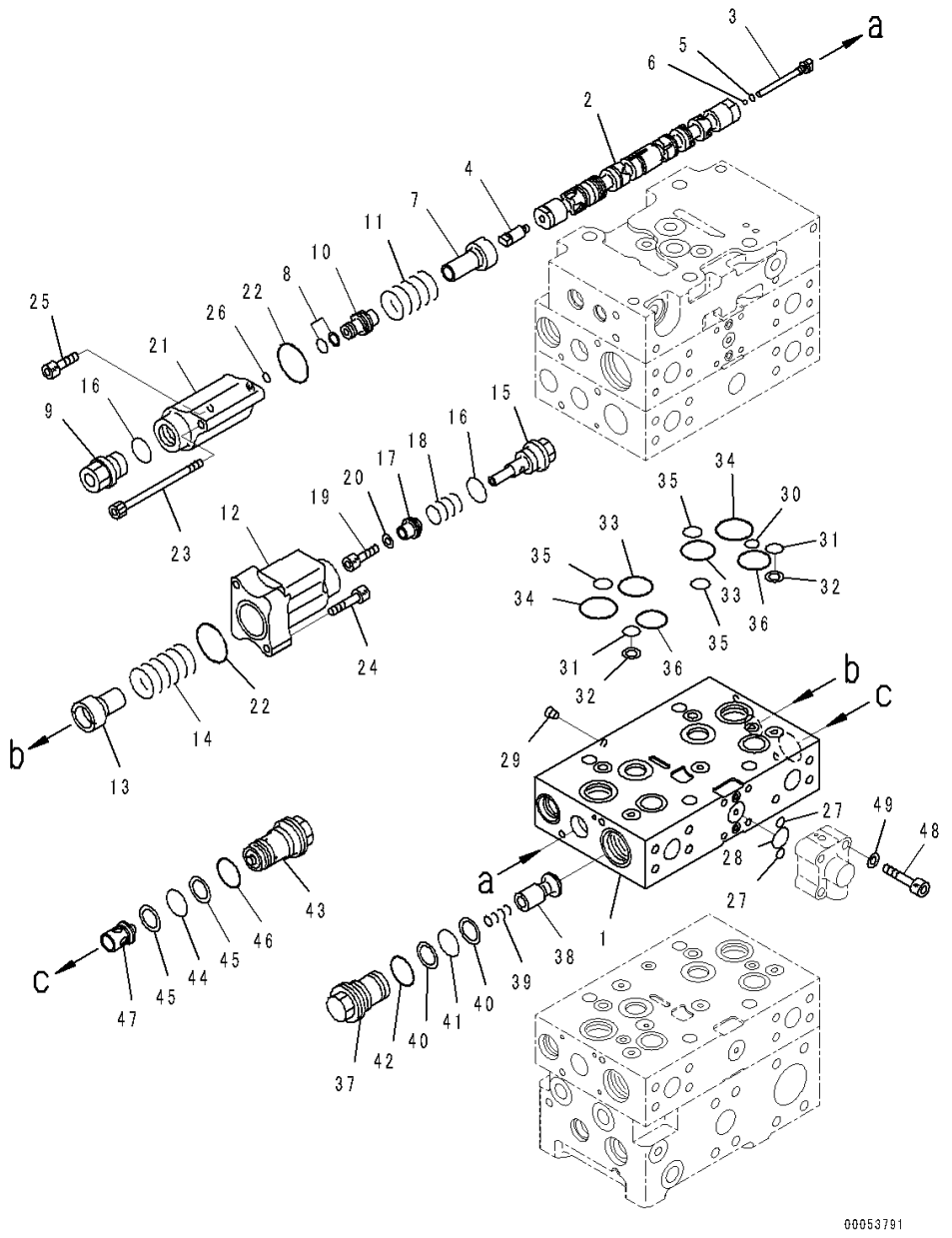

Index	Code	Part Number	Description	Qty	Serial Number
		Note: This list covers following specifications.			
		With 3-Spool Control Valve			
		With 3-Spool Control Valve, ECSS			
		723-44-13500	Valve Assembly, Control	1	90216-
			With 3-Spool Control Valve		
		723-44-13400	Valve Assembly, Control	1	90216-
			With 3-Spool Control Valve, ECSS		
	C1		• Body Subassembly	1	90216-
1	C1		• • Valve Body	1	90216-
2	C1		• • Spool	1	90216-
3		723-46-15130	• • Plug	1	90216-
4		723-46-16940	• • Plug	1	90216-
5		07002-10823	• • O-ring	1	90216-
6	C1		• • Ball	1	90216-
7		723-46-16950	• • Retainer	1	90216-
8		723-46-16920	• • Seal	1	90216-
9		723-46-16910	• • Plug	1	90216-
10		723-46-16930	• • Piston	1	90216-
11		723-46-14410	• • Spring	1	90216-
12		723-46-16860	• • Case	1	90216-
13		723-46-16690	• • Retainer	1	90216-
14		723-46-14430	• • Spring	1	90216-
15		723-46-16890	• • Plug	1	90216-
16		07000-13024	• • O-ring	2	90216-
17		723-46-16710	• • Retainer	1	90216-
18		723-46-14370	• • Spring	1	90216-
19		01252-60616	• • Bolt, Hexagon Socket Head	1	90216-
20		01643-30623	• • Washer	1	90216-
21	C1		• • Case	1	90216-
22		07430-71380	• • O-ring	2	90216-
23		723-46-17350	• • Bolt, Hexagon Socket Head	1	90216-
24		01252-60840	• • Bolt, Hexagon Socket Head	2	90216-
25		01252-60820	• • Bolt, Hexagon Socket Head	1	90216-
26		07000-11008	• • O-ring	1	90216-
27		07000-11009	• • O-ring	2	90216-
28		07000-12021	• • O-ring	1	90216-
29	C1		• • Plug	1	90216-
30		723-46-17530	• • O-ring	1	90216-
31		723-11-19130	• • O-ring	2	90216-
32		723-46-17520	• • Ring, Back-up	2	90216-

FIG. H0120-010006 Hydraulic Oil Control Valve (4-valve) (6/10)

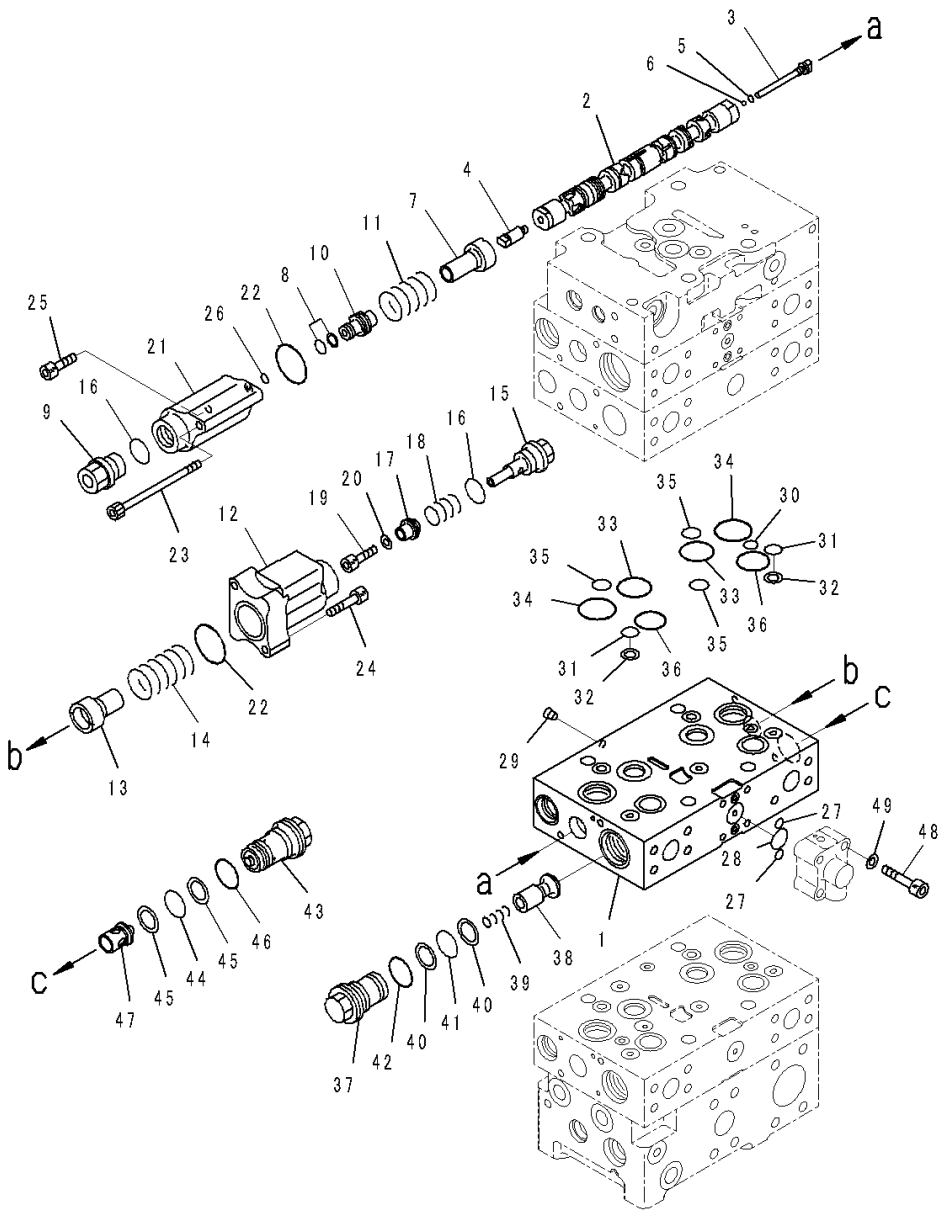

Index	Code	Part Number	Description	Qty	Serial Number
33		723-46-16520	• • O-ring	2	90216-
34		723-46-17510	• • O-ring	2	90216-
35		722-12-19070	• • O-ring	3	90216-
36		723-26-15830	• • O-ring	2	90216-
37		723-46-43971	• • Sleeve	1	90216-
38		723-46-43980	• • Valve	1	90216-
39		723-46-44920	• • Spring	1	90216-
40		723-46-41950	• • Ring, Back-up	2	90216-
41		700-93-11320	• • O-ring	1	90216-
42		07002-13634	• • O-ring	1	90216-
43		723-46-40100	• • Valve Assembly	1	90216-
44		700-93-11320	• • • O-ring	1	90216-
45		723-46-41950	• • • Ring, Back-up	2	90216-
46		07002-13634	• • • O-ring	1	90216-
47		723-46-41210	• • Valve	1	90216-
48		01252-60845	• • Bolt, Hexagon Socket Head	4	90216-
49		01643-50823	• • Washer	4	90216-

FIG. H0120-010007 Hydraulic Oil Control Valve (With 3-Spool Control Valve) (4-valve) (7/10)

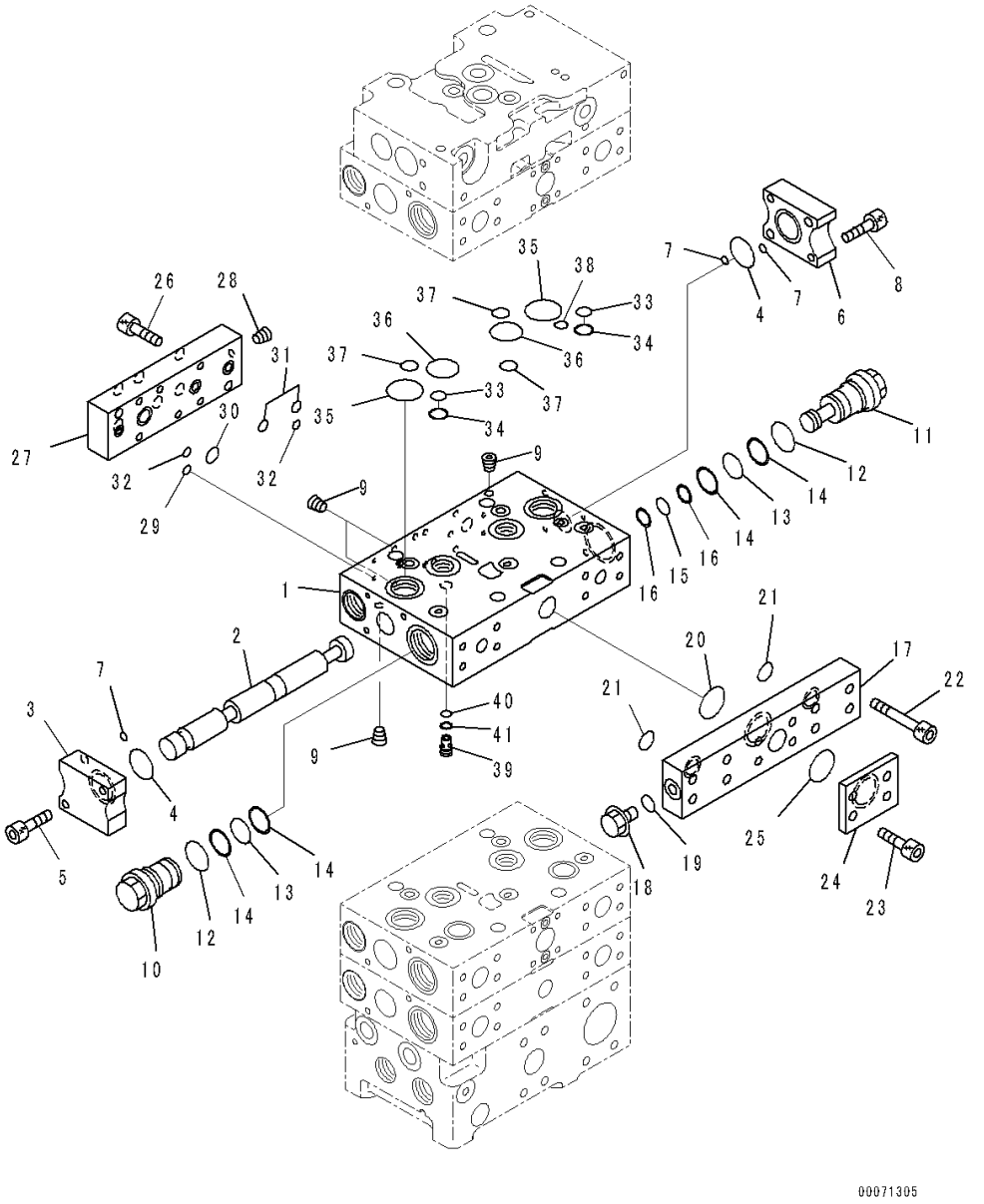

Index	Code	Part Number	Description	Qty	Serial Number
		723-44-13500	Valve Assembly, Control	1	90216-
	C1		• Body Subassembly	1	90216-
1	C1		• • Valve Body, Valve	1	90216-
2	C1		• • Spool	1	90216-
3		723-46-17940	• • Plate	1	90216-
4		07000-13035	• • O-ring	2	90216-
5		01252-60840	• • Bolt, Hexagon Socket Head	2	90216-
6		723-46-16970	• • Plate	1	90216-
7		07000-11008	• • O-ring	3	90216-
8		01252-60840	• • Bolt, Hexagon Socket Head	2	90216-
9	C1		• • Plug	4	90216-
10		723-46-16731	• • Plug	1	90216-
11		723-46-16741	• • Plug	1	90216-
12		07002-13634	• • O-ring	2	90216-
13		700-93-11320	• • O-ring	2	90216-
14		723-46-41950	• • Ring, Back-up	4	90216-
15		07000-12018	• • O-ring	1	90216-
16		07001-02018	• • Ring, Back-up	2	90216-
17		723-46-16750	• • Plate	1	90216-
18		708-8E-16150	• • Plug	1	90216-
19		07002-11023	• • O-ring	1	90216-
20		07000-13035	• • O-ring	1	90216-
21		07000-12021	• • O-ring	2	90216-
22		01252-61045	• • Bolt, Hexagon Socket Head	8	90216-
23		01252-61025	• • Bolt, Hexagon Socket Head	4	90216-
24		723-46-16990	• • Plate	1	90216-
25		07000-12035	• • O-ring	1	90216-
26		01252-60835	• • Bolt, Hexagon Socket Head	6	90216-
27		723-46-16980	• • Plate	1	90216-
28		708-21-12541	• • Plug	1	90216-
29		07000-11010	• • O-ring	1	90216-
30		07000-12018	• • O-ring	1	90216-
31		07000-12012	• • O-ring	2	90216-
32		07000-11008	• • O-ring	2	90216-
33		723-11-19130	• • O-ring	2	90216-
34		723-46-17520	• • Ring, Back-up	2	90216-
35		723-46-17510	• • O-ring	2	90216-
36		723-46-16520	• • O-ring	2	90216-
37		722-12-19070	• • O-ring	3	90216-
38		723-46-17530	• • O-ring	1	90216-

FIG. H0120-010007 Hydraulic Oil Control Valve (With 3-Spool Control Valve) (4-valve) (7/10)

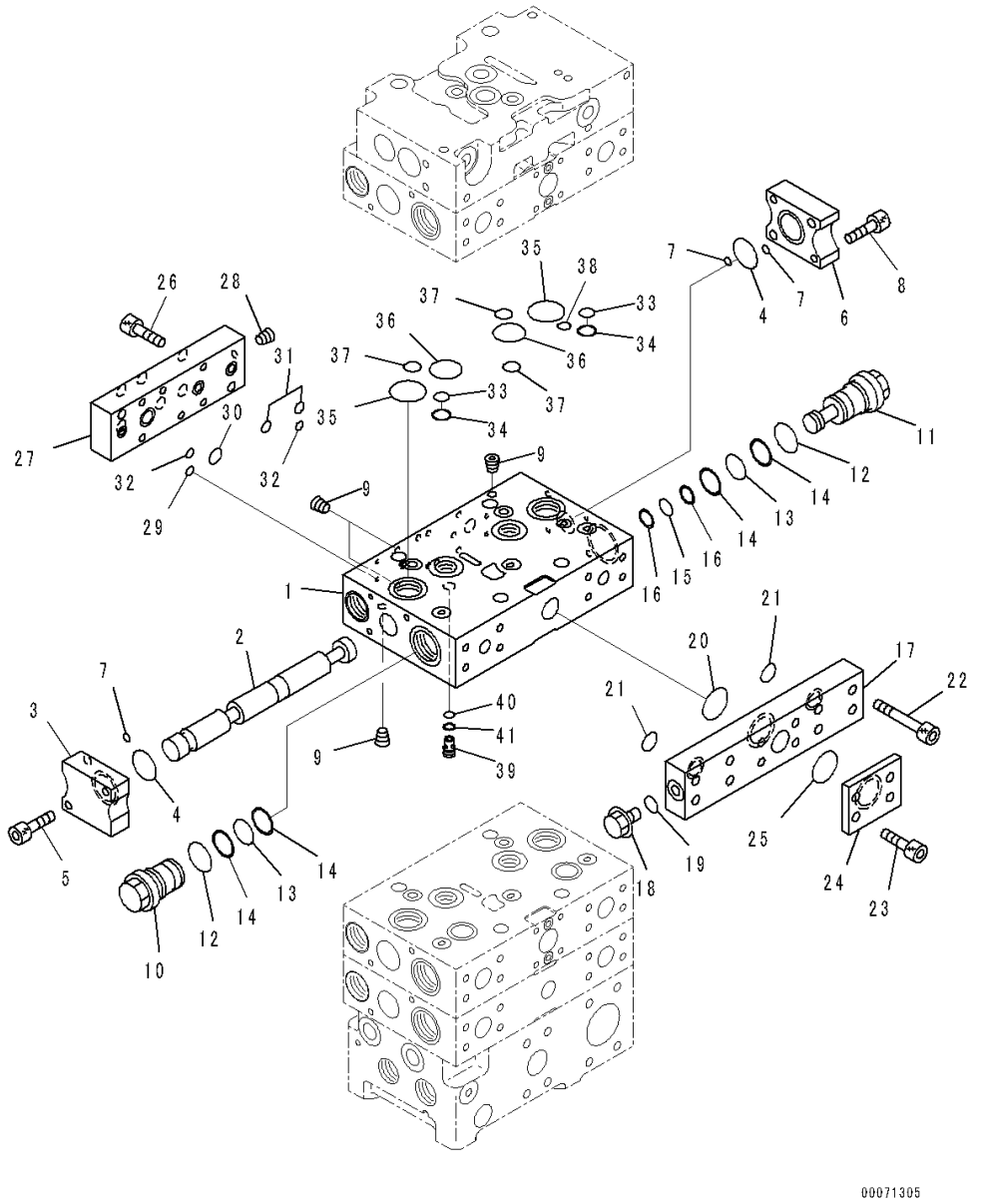

Index	Code	Part Number	Description	Qty	Serial Number
39		723-46-16960	• • Plug	1	90216-
40		07000-11010	• • O-ring	1	90216-
41		07001-01010	• • Ring, Back-up	1	90216-

FIG. H0120-010008 Hydraulic Oil Control Valve (4-valve) (8/10)

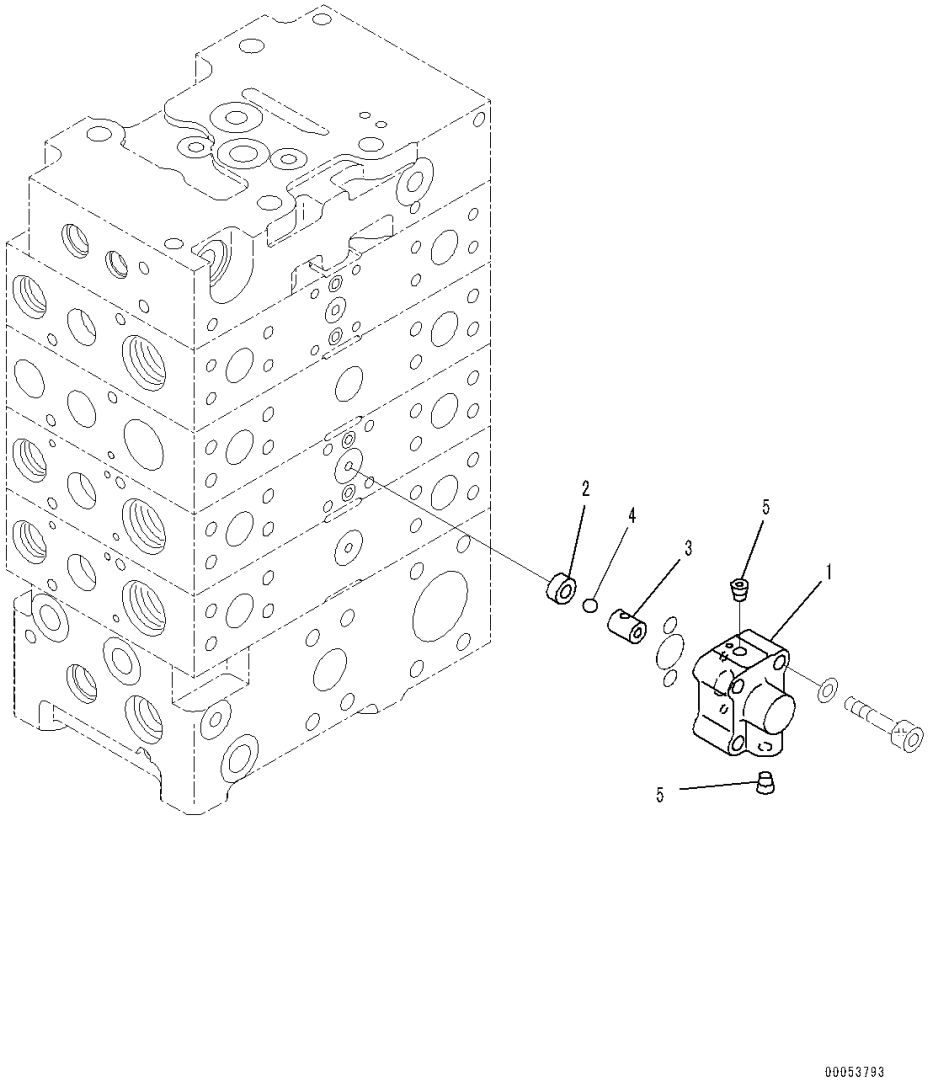

Index	Code	Part Number	Description	Qty	Serial Number
		Note: This list covers following specifications.			
		With 3-Spool Control Valve			
		With 3-Spool Control Valve, ECSS			
		723-44-13500	Valve Assembly, Control	1	90216-
			With 3-Spool Control Valve		
		723-44-13400	Valve Assembly, Control	1	90216-
			With 3-Spool Control Valve, ECSS		
		723-40-66300	• Valve Assembly	1	90216-
1	C1		• • Case	1	90216-
2	C1		• • Seat	1	90216-
3	C1		• • Seat	1	90216-
4	C1		• • Ball	1	90216-
5	C1		• • Plug	2	90216-

FIG. H0120-010009 Hydraulic Oil Control Valve (4-valve) (9/10)

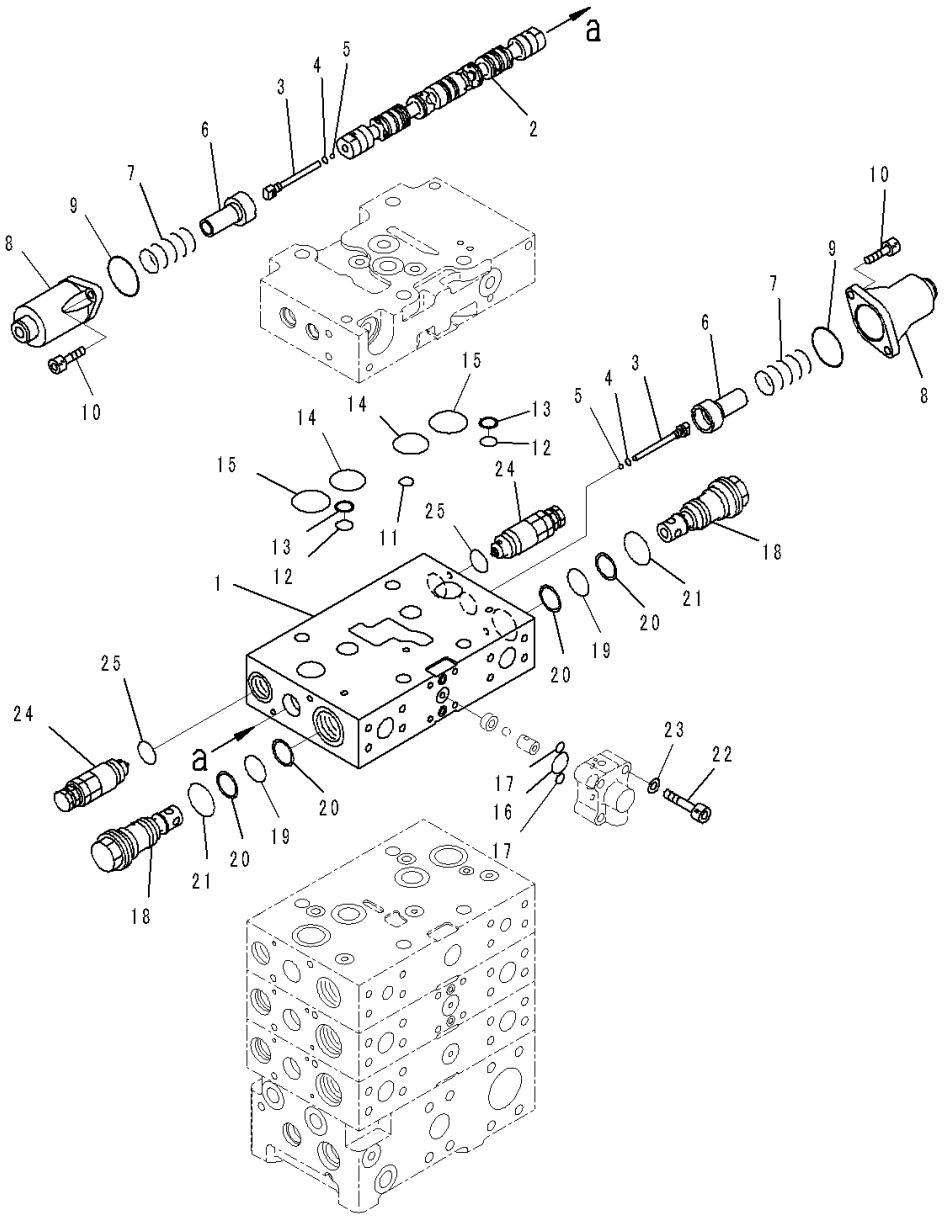

Index	Code	Part Number	Description	Qty	Serial Number
		Note: This list covers following specifications.			
		With 3-Spool Control Valve			
		With 3-Spool Control Valve, ECSS			
		723-44-13500	Valve Assembly, Control	1	90216-
			With 3-Spool Control Valve		
		723-44-13400	Valve Assembly, Control	1	90216-
			With 3-Spool Control Valve, ECSS		
	C1		• Body Subassembly	1	90216-
1	C1		• • Valve Body	1	90216-
2	C1		• • Spool	1	90216-
3		723-46-15130	• • Plug	2	90216-
4		07002-10823	• • O-ring	2	90216-
5	C1		• • Ball	2	90216-
6		723-46-15120	• • Retainer	2	90216-
7		723-46-14110	• • Spring	2	90216-
8		723-46-15111	• • Case	2	90216-
9		07430-71380	• • O-ring	2	90216-
10		01252-60820	• • Bolt, Hexagon Socket Head	4	90216-
11		723-46-17530	• • O-ring	1	90216-
12		723-11-19130	• • O-ring	2	90216-
13		723-46-17520	• • Ring, Back-up	2	90216-
14		723-46-16520	• • O-ring	2	90216-
15		723-46-17510	• • O-ring	2	90216-
16		07000-12021	• • O-ring	1	90216-
17		07000-11009	• • O-ring	2	90216-
18		723-46-40500	• • Valve Assembly	2	90216-
19		700-93-11320	• • • O-ring	1	90216-
20		723-46-41950	• • • Ring, Back-up	2	90216-
21		07002-13634	• • • O-ring	1	90216-
22		01643-50823	• • Washer	4	90216-
23		01252-60845	• • Bolt, Hexagon Socket Head	4	90216-
24		723-90-65300	• Valve Assembly	2	90216-
25		07000-13024	• • O-ring	1	90216-

FIG. H0120-010010 Hydraulic Oil Control Valve (4-valve) (10/10)

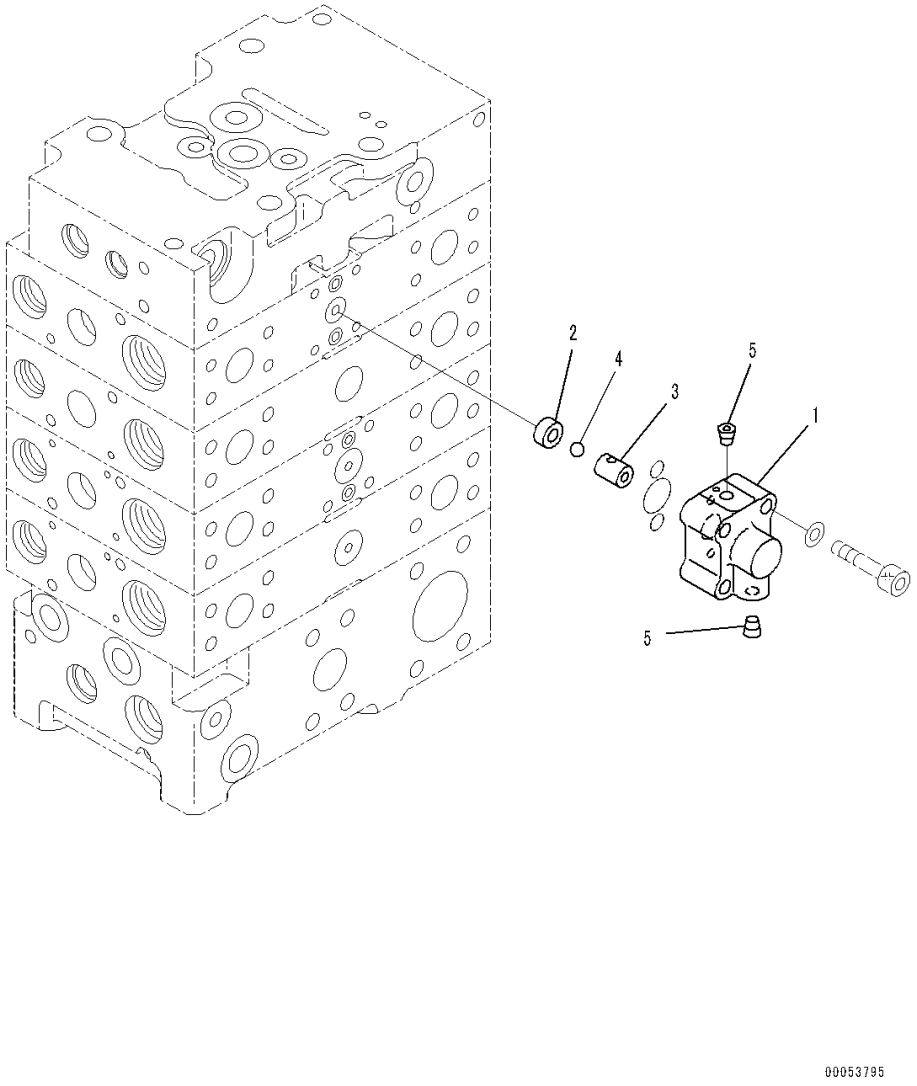

Index	Code	Part Number	Description	Qty	Serial Number
		Note: This list covers following specifications.			
		With 3-Spool Control Valve			
		With 3-Spool Control Valve, ECSS			
		723-44-13500	Valve Assembly, Control	1	90216-
			With 3-Spool Control Valve		
		723-44-13400	Valve Assembly, Control	1	90216-
			With 3-Spool Control Valve, ECSS		
		723-40-66300	• Valve Assembly	1	90216-
1	C1		• • Case	1	90216-
2	C1		• • Seat	1	90216-
3	C1		• • Seat	1	90216-
4	C1		• • Ball	1	90216-
5	C1		• • Plug	2	90216-

FIG. H0120-010011 Hydraulic Oil Control Valve (With 3-Spool Control Valve) (Bracket)

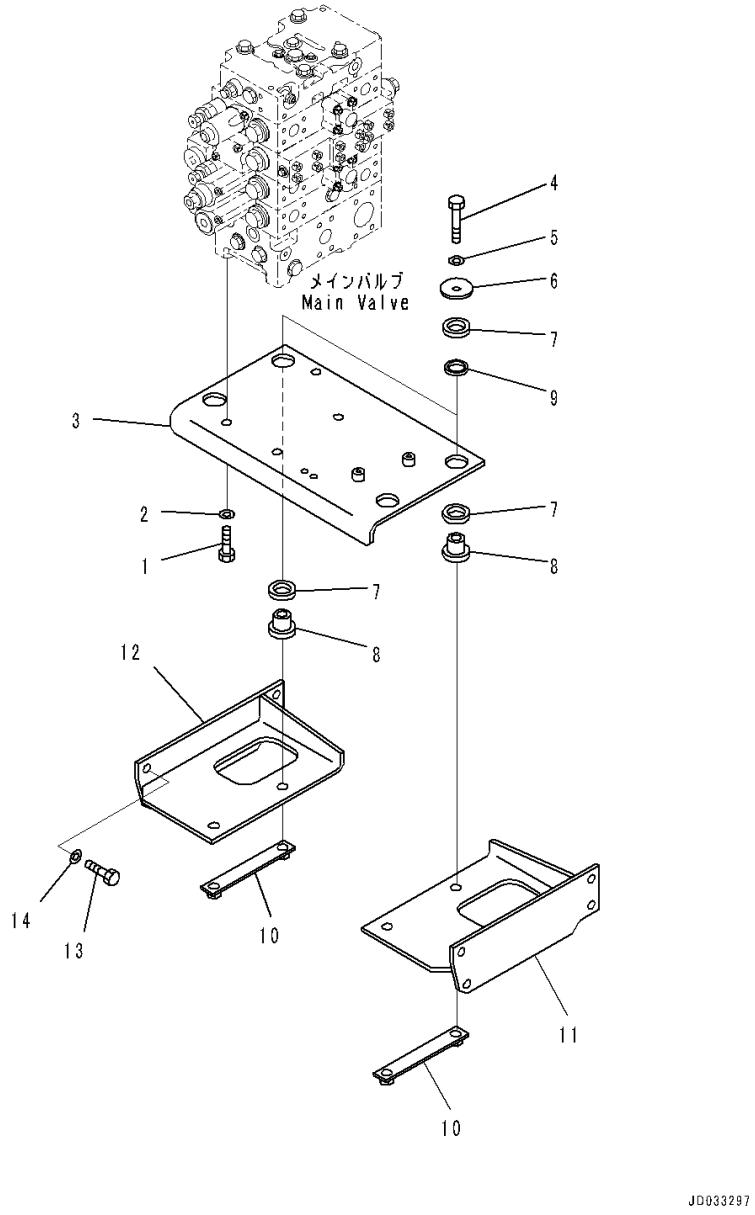

Index	Code	Part Number	Description	Qty	Serial Number
1		01010-81640	Bolt	4	90216-
2		01643-31645	Washer	4	90216-
3		421-64-41110	Bracket	1	90216-
4		01010-81685	Bolt	4	90216-
5		01643-31645	Washer	4	90216-
6		425-70-11290	Washer	4	90216-
7		421-64-23120	Cushion	8	90216-
8		421-64-41140	Boss	4	90216-
9		421-64-23130	Cushion	4	90216-
10		421-64-41150	Bracket	2	90216-
11		421-64-41121	Bracket	1	90216-
12		421-64-41130	Bracket	1	90216-
13		01010-D1635	Bolt	8	90216-
14		01643-71645	Washer	8	90216-

FIG. H0120-010013 Hydraulic Oil Control Valve (Elbow) (2/2)

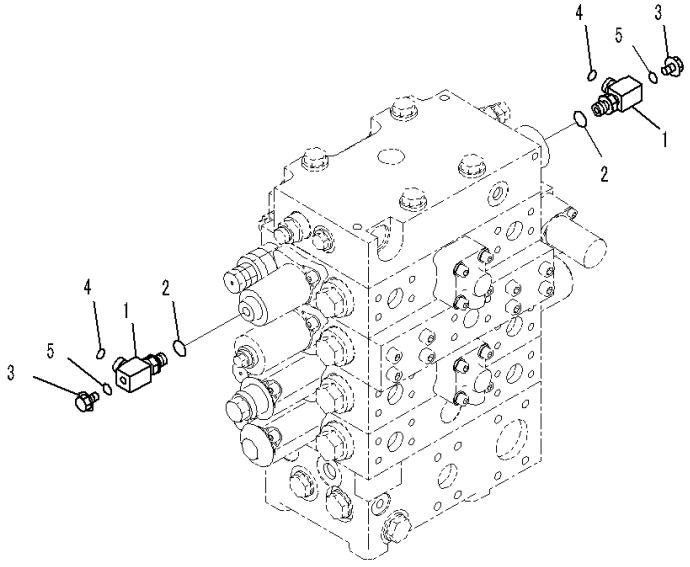

Index	Code	Part Number	Description	Qty	Serial Number
		Note: This list covers following specifications.			
		With 3-Spool Control Valve			
		With 3-Spool Control Valve, ECSS			
1		423-62-34290	Elbow	2	90216-
2		07002-11423	O-ring	2	90216-
3		423-62-52290	Plug	2	90648-
4		02896-11009	O-ring	2	90216-
5		07002-11023	O-ring	2	90216-

FIG. H0120-009007 Hydraulic Oil Control Valve (With 3-Spool Control Valve, ECSS) (4-valve) (7/11)

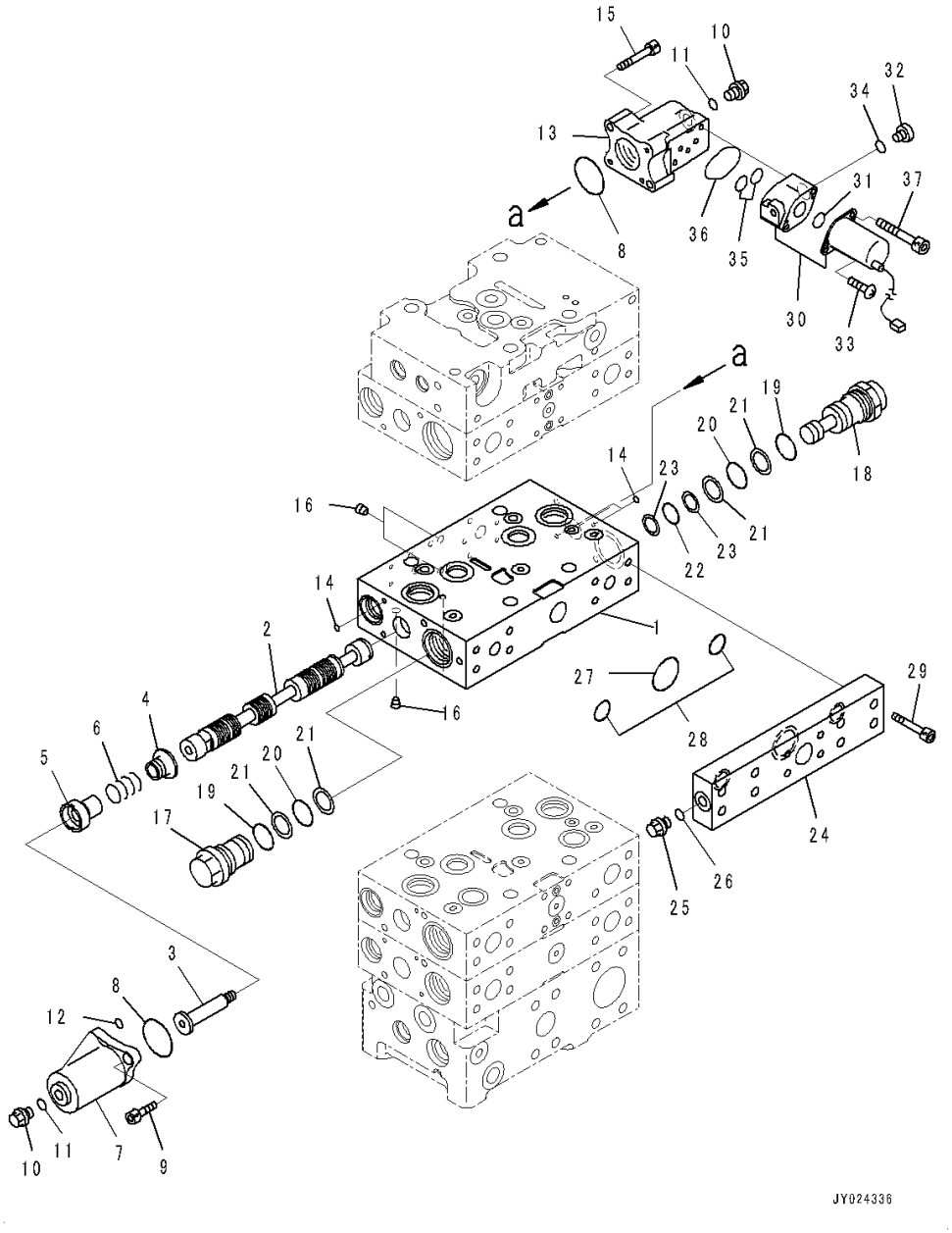

Index	Code	Part Number	Description	Qty	Serial Number
		723-44-13400	Valve Assembly, Control	1	90216-
	C1		• Body Subassembly	1	90216-
1	C1		• • Valve Body	1	90216-
2	C1		• • Spool	1	90216-
3		723-46-15390	• • Plug	1	90216-
4		723-46-16720	• • Retainer	1	90216-
5		723-46-15380	• • Retainer	1	90216-
6		723-46-14381	• • Spring	1	90216-
7		723-46-17840	• • Case	1	90216-
8		07430-71380	• • O-ring	2	90216-
9		01252-60820	• • Bolt, Hexagon Socket Head	2	90216-
10		706-73-71450	• • Plug	2	90216-
11		07002-11423	• • O-ring	2	90216-
12		723-11-19960	• • O-ring	1	90216-
13	C1		• • Case	1	90216-
14		07000-11008	• • O-ring	3	90216-
15		01252-60840	• • Bolt, Hexagon Socket Head	2	90216-
16	C1		• • Plug	4	90216-
17		723-46-16731	• • Plug	1	90216-
18		723-46-16741	• • Plug	1	90216-
19		07002-13634	• • O-ring	2	90216-
20		700-93-11320	• • O-ring	2	90216-
21		723-46-41950	• • Ring, Back-up	4	90216-
22		07000-12018	• • O-ring	1	90216-
23		07001-02018	• • Ring, Back-up	2	90216-
24		723-46-16750	• • Plate	1	90216-
25		708-8E-16150	• • Plug	1	90216-
26		07002-11023	• • O-ring	1	90216-
27		07000-13035	• • O-ring	1	90216-
28		07000-12021	• • O-ring	2	90216-
29		01252-61045	• • Bolt, Hexagon Socket Head	8	90216-
30		702-21-07610	• • Valve, Solenoid	1	90216-
31		702-21-53680	• • • O-ring	1	90216-
32		702-21-55620	• • • Plug	1	90216-
33		702-21-53330	• • • Screw	2	90216-
34		07002-11423	• • • O-ring	1	90216-
35		700-22-11410	• • O-ring	2	90216-
36		702-21-39450	• • O-ring	1	90216-
37		203-60-62220	• • Bolt	2	90216-

FIG. H0120-009008 Hydraulic Oil Control Valve (With 3-Spool Control Valve, ECSS) (4-valve) (8/11)

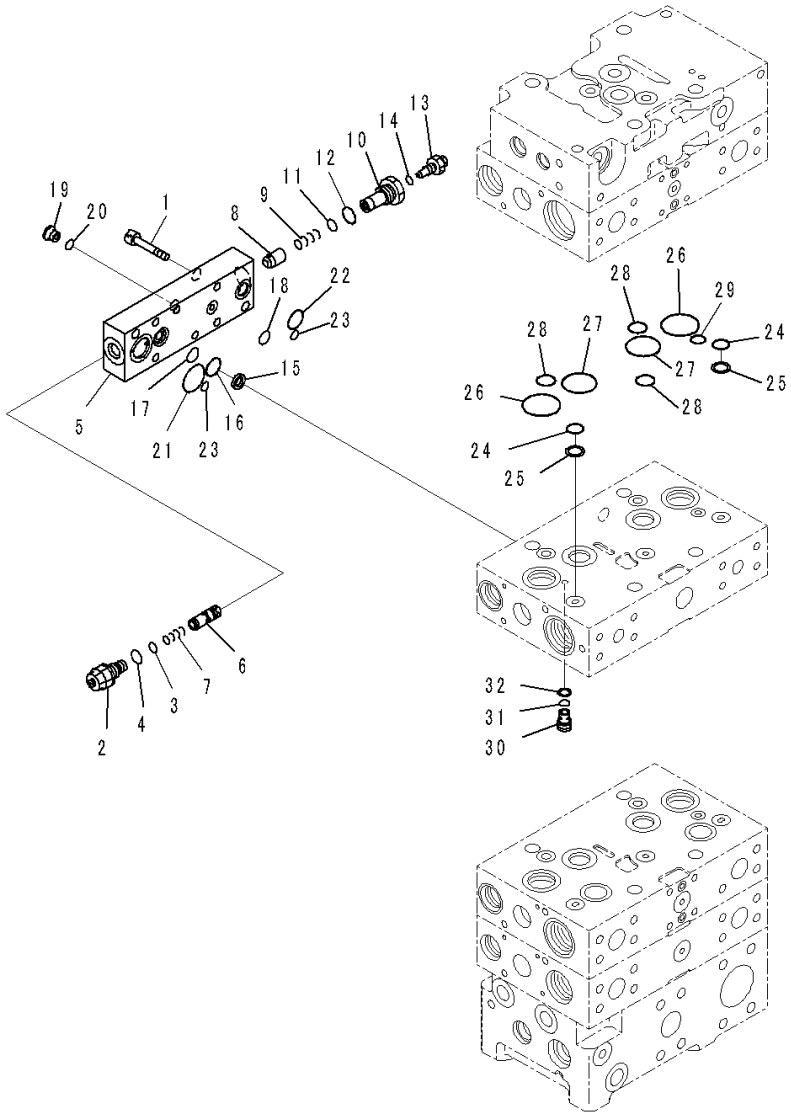

Index	Code	Part Number	Description	Qty	Serial Number
		723-44-13400	Valve Assembly, Control	1	90216-
	C1		• Body Subassembly	1	90216-
1		01252-60835	• • Bolt, Hexagon Socket Head	6	90216-
		723-40-93400	• • Valve Assembly	1	90216-
2		723-40-93500	• • • Valve, Relief	1	90216-
3		702-16-53920	• • • • O-ring	1	90216-
4		07002-11623	• • • • O-ring	1	90216-
5	C1		• • • Block	1	90216-
6	C1		• • • Spool	1	90216-
7		702-21-55640	• • • Spring	1	90216-
8		723-56-31610	• • • Valve	1	90216-
9		723-56-31620	• • • Spring	1	90216-
10		723-50-61440	• • • Plug	1	90216-
11		07000-12010	• • • O-ring	1	90216-
12		07002-12034	• • • O-ring	1	90216-
13		708-2L-35530	• • • Plug	1	90216-
14		07002-61023	• • • O-ring	1	90216-
15		702-21-53140	• • • Filter	1	90216-
16		702-21-55520	• • • O-ring	1	90216-
17		702-21-55420	• • • O-ring	1	90216-
18		723-46-17530	• • • O-ring	1	90216-
19		723-11-18190	• • • Plug	1	90216-
20		07002-11023	• • • O-ring	1	90216-
21		723-11-19110	• • • O-ring	1	90216-
22		723-46-18710	• • • O-ring	1	90216-
23		07000-11008	• • • O-ring	2	90216-
24		723-11-19130	• • O-ring	2	90216-
25		723-46-17520	• • Ring, Back-up	2	90216-
26		723-46-17510	• • O-ring	2	90216-
27		723-46-16520	• • O-ring	2	90216-
28		722-12-19070	• • O-ring	3	90216-
29		723-46-17530	• • O-ring	1	90216-
30		723-46-16960	• • Plug	1	90216-
31		07000-11010	• • O-ring	1	90216-
32		07001-01010	• • Ring, Back-up	1	90216-

FIG. H0120-009012 Hydraulic Oil Control Valve (With 3-Spool Control Valve, ECSS) (Bracket)

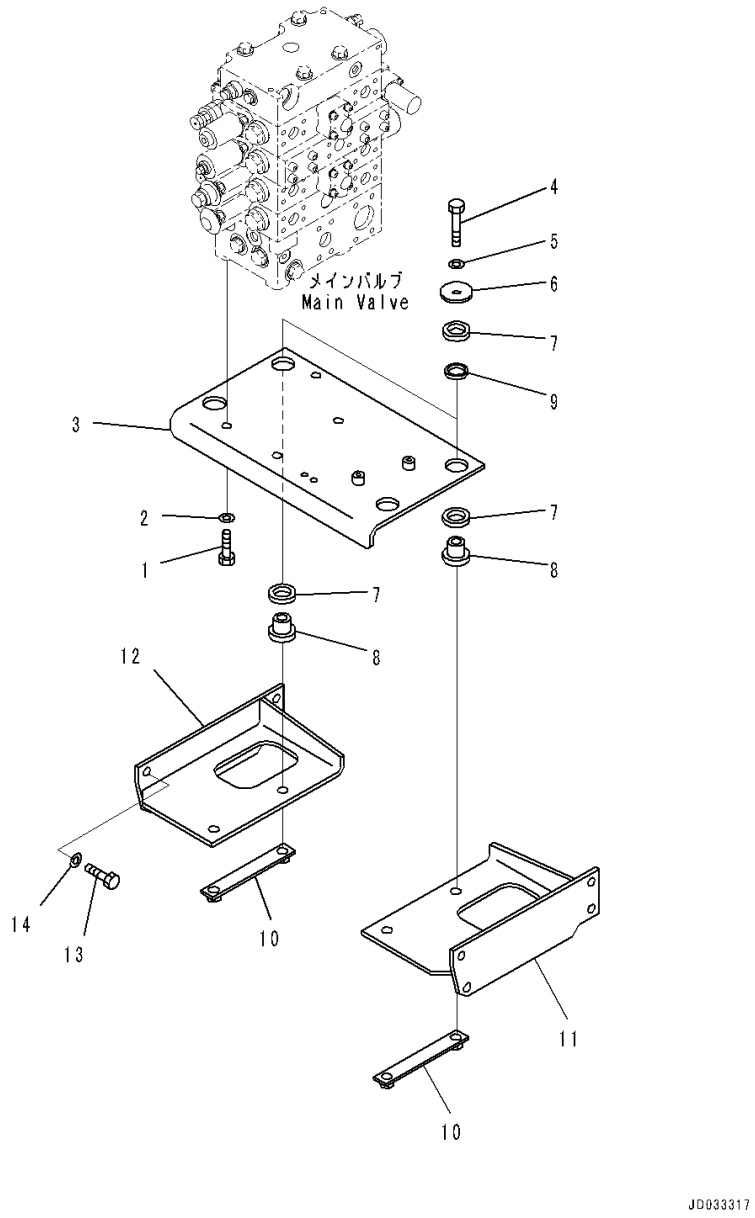

Index	Code	Part Number	Description	Qty	Serial Number
1		01010-81640	Bolt	4	90216-
2		01643-31645	Washer	4	90216-
3		421-64-41110	Bracket	1	90216-
4		01010-81685	Bolt	4	90216-
5		01643-31645	Washer	4	90216-
6		425-70-11290	Washer	4	90216-
7		421-64-23120	Cushion	8	90216-
8		421-64-41140	Boss	4	90216-
9		421-64-23130	Cushion	4	90216-
10		421-64-41150	Bracket	2	90216-
11		421-64-41121	Bracket	1	90216-
12		421-64-41130	Bracket	1	90216-
13		01010-D1635	Bolt	8	90216-
14		01643-71645	Washer	8	90216-

FIG. H0122-003001 Steering Demand Valve (Inner Parts, Demand Valve)

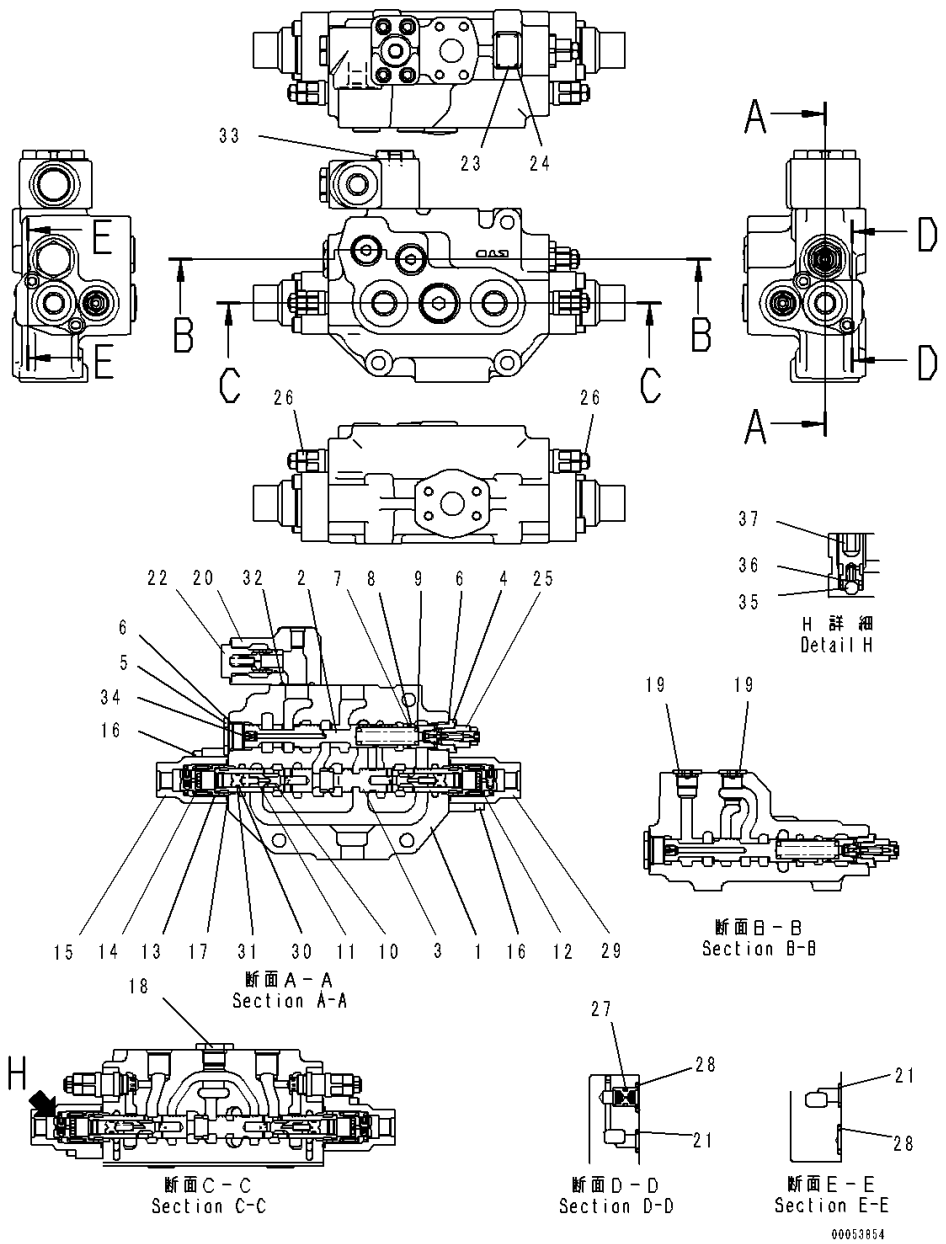

Index	Code	Part Number	Description	Qty	Serial Number
		421-64-45110	Valve, Control	1	90216-
1	C1		• Housing	1	90216-
2	C1		• Spool	1	90216-
3	C1		• Spool	1	90216-
4		KBT1155-31301	• Plug	1	90216-
5		KB21001-01445	• Plug	1	90216-
6		KB21001-00213	• O-ring, (Kit : K08)	2	90216-
7		KB95111-02200	• O-ring, (Kit : K08)	1	90216-
8		KB95712-02200	• Ring, (Kit : K08)	1	90216-
9		KBT1461-14007	• Spring	1	90216-
10		KB21111-52152	• Poppet	2	90216-
11		KB21011-30644	• Spring	2	90216-
12	C1		• Cap	2	90216-
13	C1		• Seat, Spring	2	90216-
14		KBT1461-34003	• Spring	2	90216-
15		KBC0001-52003	• Cap	1	90216-
16		KB92703-10451	• Bolt	4	90216-
17		KB95121-04000	• O-ring, (Kit : K08)	2	90216-
18	C1		• Plug Assembly	1	90216-
19	C1		• Plug Assembly	2	90216-
20	C1		• Body	1	90216-
21		KB95111-01000	• O-ring, (Kit : K08)	2	90216-
22	C1		• Valve Assembly, Relief	1	90216-
23	C1		• Plate, Name	1	90216-
24	C1		• Screw	4	90216-
25	C1		• Valve Assembly, Relief	1	90216-
26	C1		• Valve Assembly, Relief	2	90216-
27	C1		• Sleeve	1	90216-
28		KB95111-01200	• O-ring, (Kit : K08)	2	90216-
29	C1		• Cap Assembly	1	90216-
30		KB95111-01090	• O-ring, (Kit : K08)	2	90216-
31		KB95712-01090	• Ring, (Kit : K08)	2	90216-
32		KBT1515-30001	• O-ring, (Kit : K08)	1	90216-
33		KB92703-10701	• Bolt	4	90216-
34		KB21001-90440	• Plug	1	90216-
35	C1		• Ball, Steel	2	90216-
36	C1		• Spring	2	90216-
37	C1		• Plug	2	90216-

FIG. H0122-003002 Steering Demand Valve (Bracket)

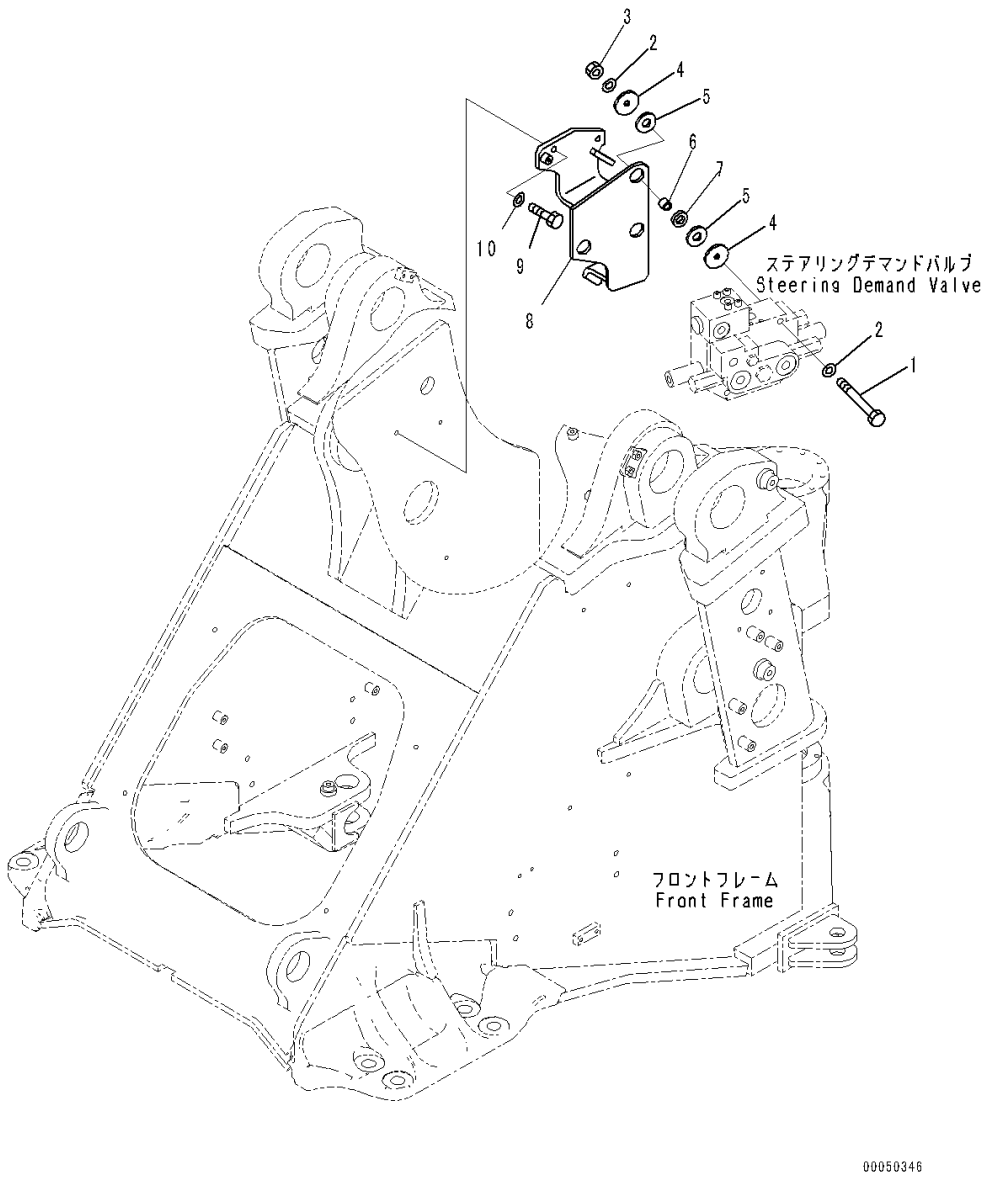

Index	Code	Part Number	Description	Qty	Serial Number
1		01011-81230	Bolt	3	90216-
2		01643-31232	Washer	6	90216-
3		01580-11210	Nut	3	90216-
4		418-54-13220	Washer	6	90216-
5		418-54-13151	Cushion	6	90216-
6		428-64-15110	Collar	3	90216-
7		418-54-13161	Cushion	3	90216-
8		421-62-42111	Bracket	1	90216-
9		01010-D1235	Bolt	3	90216-
10		01643-71232	Washer	3	90216-

FIG. H0122-003003 Steering Demand Valve (Steering Piping)

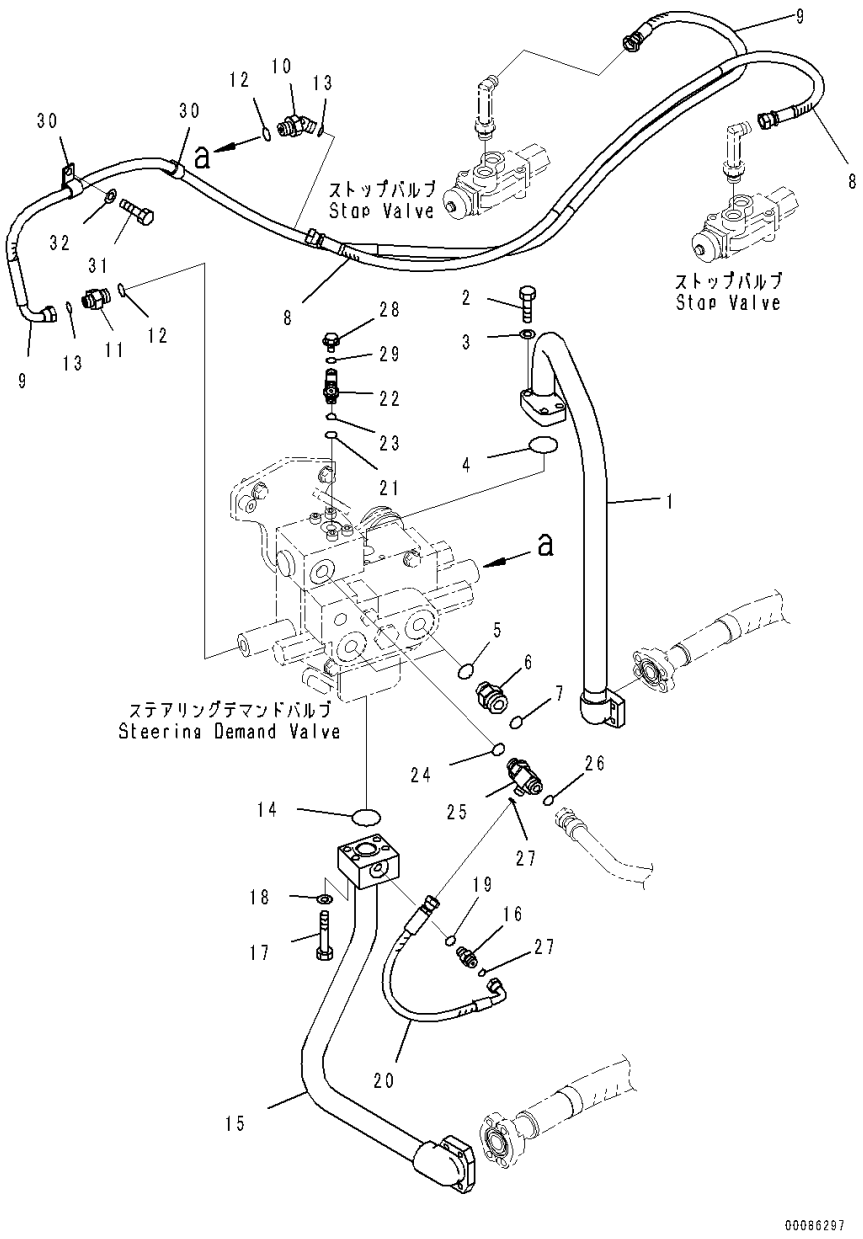

Index	Code	Part Number	Description	Qty	Serial Number
1		421-62-42150	Tube	1	90216-
2		07372-21040	Bolt	4	90216-
3		01643-51032	Washer	4	90216-
4		07000-13035	O-ring	1	90216-
5		07002-12434	O-ring	2	90216-
6		02781-00628	Union	2	90216-
7		02896-11018	O-ring	2	90216-
8		423-62-41150	Hose	1	90216-
9		423-62-41140	Hose	1	90216-
10		02783-10315	Elbow	1	90216-
11		02781-00315	Union	1	90216-
12		07002-12034	O-ring	2	90216-
13		02896-11009	O-ring	2	90216-
14		07000-13035	O-ring	1	90216-
15		421-62-42171	Tube	1	90216-
16		02781-0021D	Union	1	90216-
17		07372-21060	Bolt	4	90216-
18		01643-51032	Washer	4	90216-
19		07002-11423	O-ring	1	90216-
20		02763-00204	Hose, Face Seal Type	1	90216-
21		07002-11423	O-ring	1	90216-
22		02782-50210	Elbow	1	90216-
23		02896-11008	O-ring	1	90216-
24		07002-12034	O-ring	1	90216-
25		17A-61-41640	Elbow	1	90216-
26		02896-11012	O-ring	1	90216-
27		02896-11008	O-ring	2	90216-
28		423-62-52290	Plug	1	90648-
29		07002-11023	O-ring	1	90216-
30		04434-51610	Clip	2	90216-
31		01010-81016	Bolt	2	90216-
32		01643-31032	Washer	2	90216-

FIG. H0122-003004 Steering Demand Valve (Steering Drain Piping)

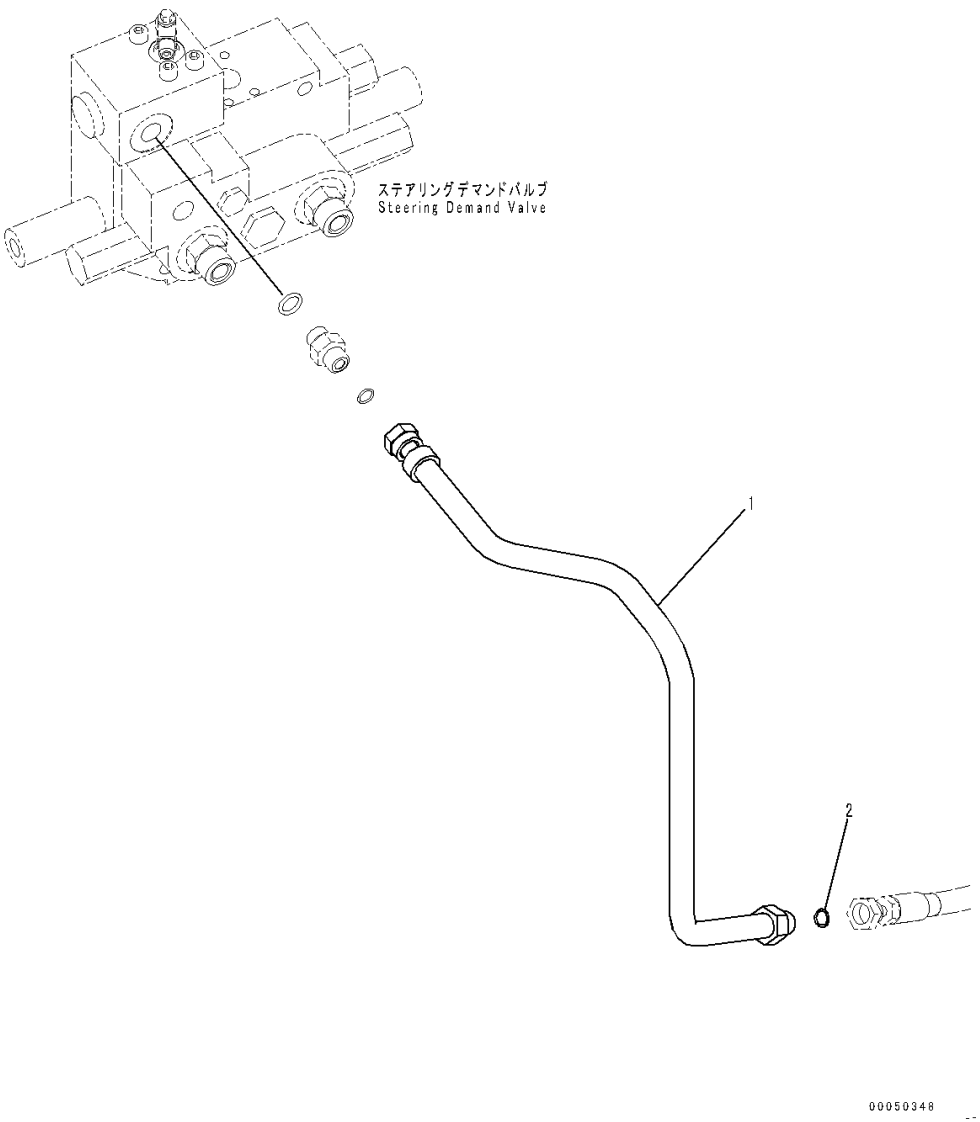

Index	Code	Part Number	Description	Qty	Serial Number
1		421-62-42161	Tube	1	90216-
2		02896-11012	O-ring	1	90216-

FIG. H0210-006001 Hydraulic Pump (Loader Pump) (1/6)

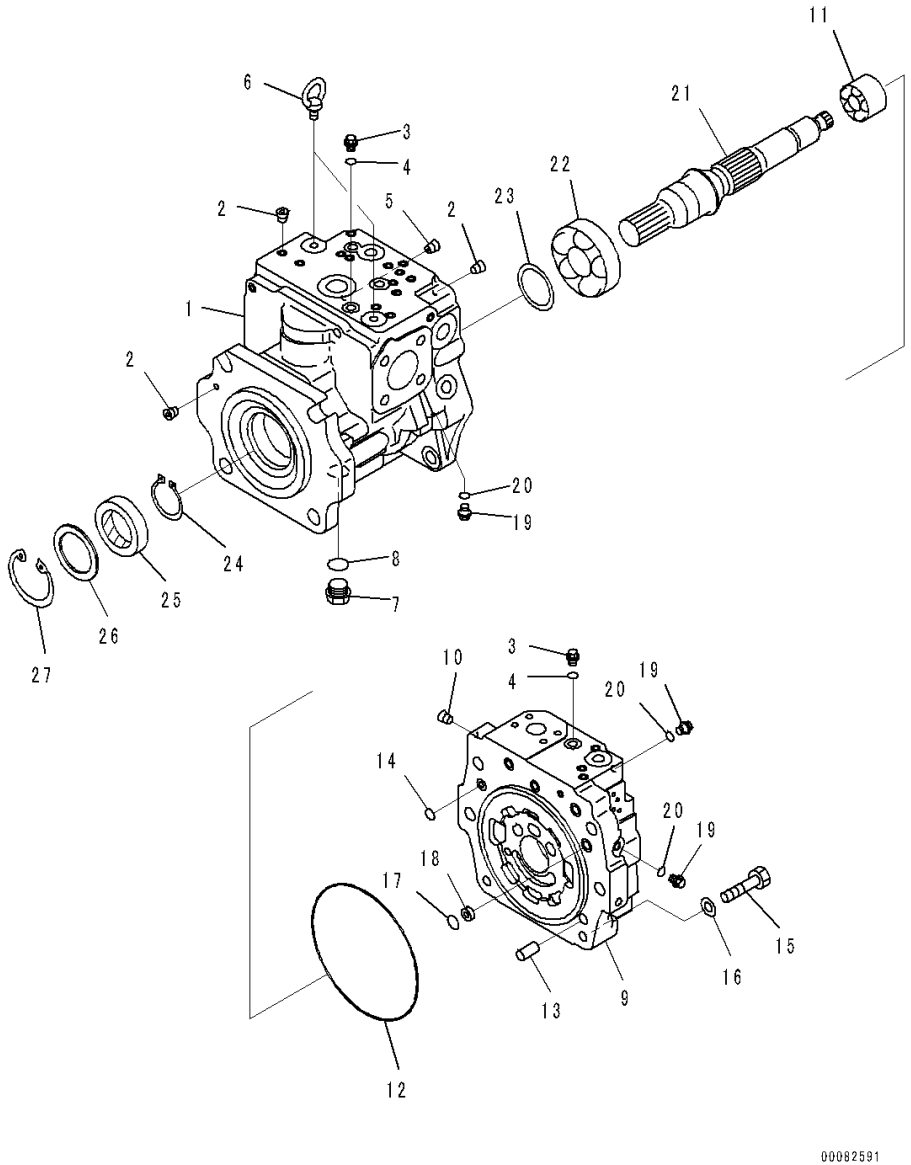

Index	Code	Part Number	Description	Qty	Serial Number
		Note: This list covers following specifications.			
		Without Emergency Steering, Automatic Control Type			
		With Emergency Steering, Automatic Control Type			
		708-1G-00060	Pump Assembly	1	90216-
	C2	708-1G-01060	• Pump Subassembly	1	90216-
	C2	708-1G-04310	• • Case Assembly, Front	1	90216-
1	C1		• • • Case, Front	1	90216-
2	C1		• • • Plug	37	90216-
3		708-8E-16150	• • Plug	2	90216-
4		07002-21023	• • O-ring	2	90216-
5	C2	708-1L-29340	• • Orifice	1	90216-
6		04530-11222	• • Bolt, Eye	2	90216-
7		07044-12412	• • Plug	1	90216-
8		07002-22434	• • O-ring	1	90216-
	C2	708-1G-04320	• • Cap Assembly, End	1	90216-
9	C1		• • • Cap, End	1	90216-
10	C1		• • • Plug	6	90216-
11	C2	708-2G-12151	• • Bearing	1	90216-
12	C2	07000-E5185	• • O-ring	1	90216-
13	C2	04020-01434	• • Pin, Dowel	1	90216-
14	C2	07000-F2012	• • O-ring	3	90216-
15	C2	01010-61660	• • Bolt	6	90216-
16	C2	01643-51645	• • Washer	6	90216-
17	C2	07000-F2014	• • O-ring	2	90216-
18		708-2L-25480	• • Filter	2	90216-
19		708-8E-16150	• • Plug	3	90216-
20		07002-21023	• • O-ring	3	90216-
21	C2	708-1G-12160	• • Shaft	1	90216-
22	C2	708-2G-12252	• • Bearing	1	90216-
23	C2	708-2G-05010	• • Washer Kit	1	90216-
	C1		• • • Washer, T=3.0mm	1	90216-
	C1		• • • Washer, T=3.1mm	1	90216-
	C1		• • • Washer, T=3.2mm	1	90216-
24	C2	708-1F-12270	• • Ring, Snap	1	90216-
25		708-2G-12220	• • Seal, Oil	1	90216-
26		708-8H-32160	• • Spacer	1	90216-
27		04065-07825	• • Ring, Snap	1	90216-

FIG. H0210-006002 Hydraulic Pump (Loader Pump) (2/6)

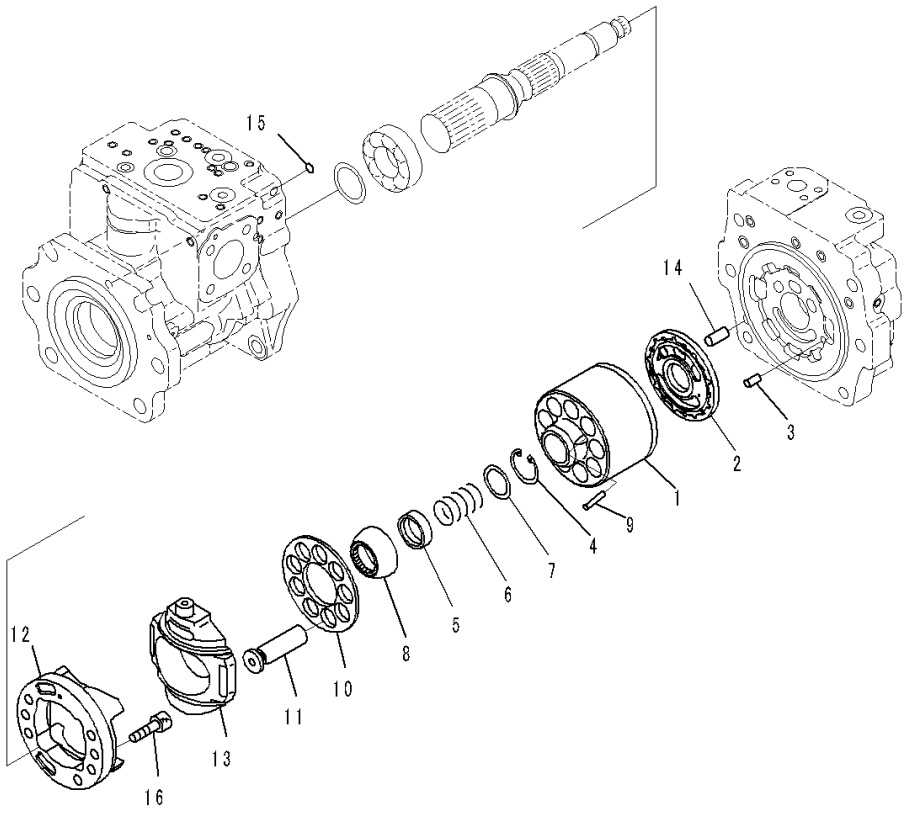

Index	Code	Part Number	Description	Qty	Serial Number
		Note: This list covers following specifications.			
		Without Emergency Steering, Automatic Control Type			
		With Emergency Steering, Automatic Control Type			
		708-1G-00060	Pump Assembly	1	90216-
	C2	708-1G-01060	• Pump Subassembly	1	90216-
	C2	708-2G-04272	• • Block Assembly	1	90216-
1	C1		• • • Cylinder Block	1	90216-
2	C1		• • • Plate, Valve	1	90216-
3	C2	708-18-13230	• • Pin	1	90216-
4	C2	04065-05520	• • Ring, Snap	1	90216-
5	C2	708-2G-13131	• • Seat	1	90216-
6	C2	708-2G-13152	• • Spring	1	90216-
7	C2	708-2G-13141	• • Seat	1	90216-
8	C2	708-2G-13510	• • Guide, Retainer	1	90216-
9	C2	708-2H-23360	• • Pin	3	90216-
10	C2	708-2G-13350	• • Retainer, Shoe	1	90216-
11	C2	708-2G-13370	• • Piston Subassembly	9	90216-
	C2	708-2G-04290	• • Cradle Subassembly	1	90216-
12	C1		• • • Cradle	1	90216-
13	C1		• • • Cam, Rocker	1	90216-
14	C2	04020-01434	• • Pin, Dowel	1	90216-
15	C2	07000-F1009	• • O-ring	1	90216-
16	C2	01252-61230	• • Bolt, Hexagon Socket Head	6	90216-

FIG. H0210-006003 Hydraulic Pump (Loader Pump) (3/6)

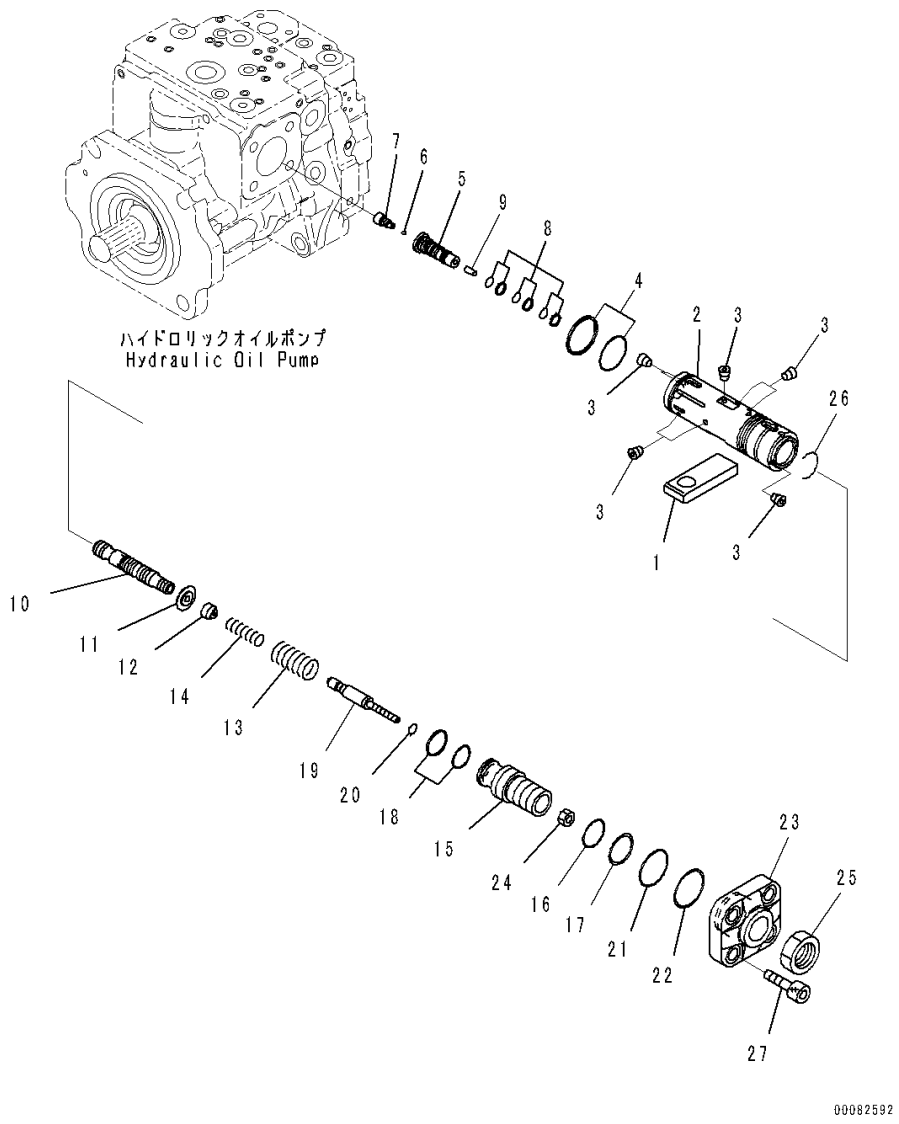

Index	Code	Part Number	Description	Qty	Serial Number
		Note: This list covers following specifications.			
		Without Emergency Steering, Automatic Control Type			
		With Emergency Steering, Automatic Control Type			
		708-1G-00060	Pump Assembly	1	90216-
	C2	708-1G-01060	• Pump Subassembly	1	90216-
1	C2	708-2G-14120	• • Slider	1	90216-
	C2	708-1G-03540	• • Valve Assembly	1	90216-
	C2	708-2G-03590	• • • Piston Assembly, Servo	1	90216-
2	C1		• • • • Piston, Servo	1	90216-
3	C1		• • • • Plug	8	90216-
4	C1		• • • Seal	1	90216-
5	C1		• • • Plug	1	90968-
6	C1		• • • Ball	1	90216-
7	C1		• • • Plug	1	90216-
8	C1		• • • Seal	3	90216-
9	C2	708-2L-35170	• • • Pin	1	90216-
10	C2	708-2L-35860	• • • Spool	1	90216-
11	C2	708-2G-15290	• • • Retainer	1	90216-
12	C2	708-2G-15140	• • • Seat	1	90216-
13	C2	708-2G-15180	• • • Spring	1	90216-
14	C2	708-1G-15270	• • • Spring	1	90216-
15	C1		• • • Screw	1	90216-
16	C2	07000-F3038	• • • O-ring	1	90216-
17	C2	708-2G-15230	• • • Ring, Back-up	1	90216-
18	C1		• • • Seal	1	90216-
19	C2	708-2G-15390	• • • Plug	1	90216-
20	C2	07000-F2012	• • • O-ring	1	90216-
21	C2	07000-F2050	• • • O-ring	1	90216-
22	C2	708-2G-15310	• • • Ring, Back-up	1	90216-
23	C2	708-2G-14190	• • • Cover	1	90216-
24	C2	01580-10806	• • • Nut	1	90216-
25	C2	708-2L-35290	• • • Nut	1	90216-
26	C2	708-2G-15330	• • • Ring, Wear	1	90216-
27	C2	01252-61645	• • Bolt, Hexagon Socket Head	4	90216-

FIG. H0210-006004 Hydraulic Pump (Loader Pump) (4/6)

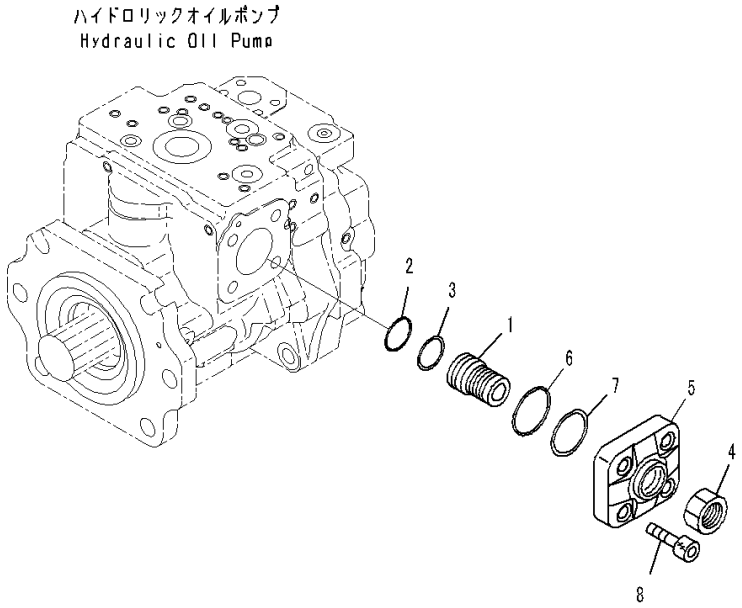

Index	Code	Part Number	Description	Qty	Serial Number
		Note: This list covers following specifications.			
		Without Emergency Steering, Automatic Control Type			
		With Emergency Steering, Automatic Control Type			
		708-1G-00060	Pump Assembly	1	90216-
	C2	708-1G-01060	• Pump Subassembly	1	90216-
	C2	708-1G-03130	• • Cover Assembly	1	90216-
1	C2	708-2G-14310	• • • Screw	1	90216-
2	C2	07000-F3038	• • • O-ring	1	90216-
3	C2	708-2G-15230	• • • Ring, Back-up	1	90216-
4	C2	708-2L-35290	• • • Nut	1	90216-
5	C2	708-2G-14170	• • • Cover	1	90216-
6	C2	07000-F2050	• • • O-ring	1	90216-
7	C2	708-2G-15310	• • • Ring, Back-up	1	90216-
8	C2	01252-61645	• • Bolt, Hexagon Socket Head	4	90216-

FIG. H0210-006005 Hydraulic Pump (Loader Pump) (5/6)

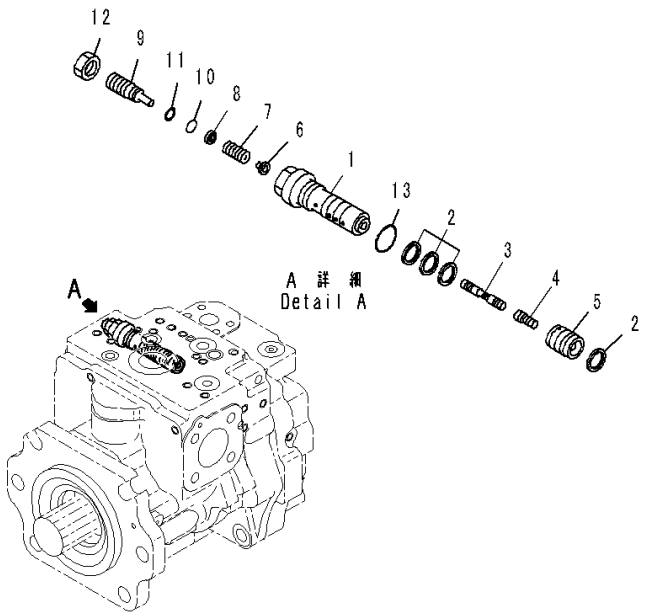

00047145

Index	Code	Part Number	Description	Qty	Serial Number
		Note: This list covers following specifications.			
		Without Emergency Steering, Automatic Control Type			
		With Emergency Steering, Automatic Control Type			
		708-1G-00060	Pump Assembly	1	90216-
		708-1H-03310	• Valve Assembly	1	90216-
1	C1		• • Sleeve	1	90216-
2	C1		• • Seal	4	90216-
3	C2	708-2G-15412	• • Spool	1	90216-
4	C2	708-2L-28540	• • Piston	1	90216-
5	C2	708-2L-35360	• • Sleeve	1	90216-
6	C2	708-2G-15440	• • Seat	1	90216-
7	C2	708-2L-35410	• • Spring	1	90216-
8	C2	708-2L-35341	• • Seat	1	90216-
9	C2	708-2L-35351	• • Plug	1	90216-
10	C2	07000-B1009	• • O-ring	1	90216-
11	C2	07001-01009	• • Ring, Back-up	1	90216-
12	C2	01583-11408	• • Nut	1	90216-
13	C2	07002-62434	• • O-ring	1	90216-

FIG. H0210-006006 Hydraulic Pump (Loader Pump) (6/6)

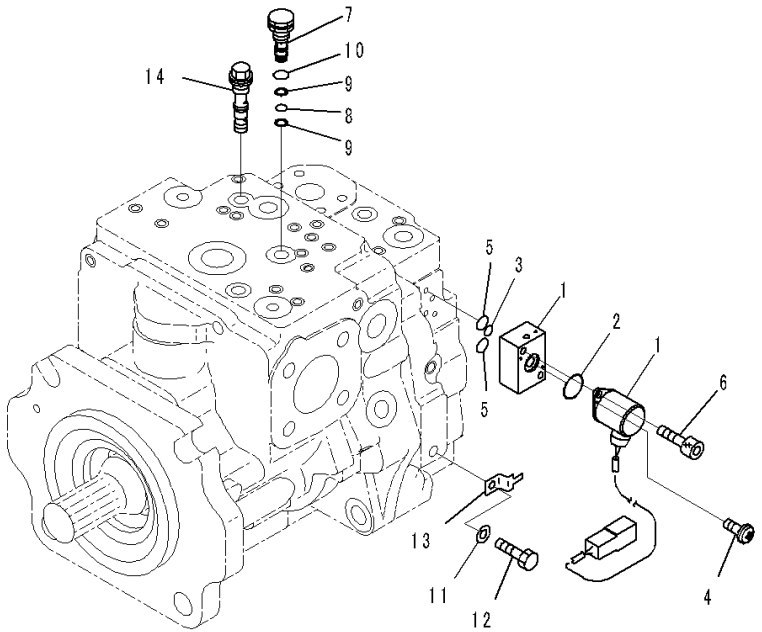

ハイドロリックオイルポンプ
Hydraulic Oil Pump

Index	Code	Part Number	Description	Qty	Serial Number
		Note: This list covers following specifications.			
		Without Emergency Steering, Automatic Control Type			
		With Emergency Steering, Automatic Control Type			
		708-1G-00060	Pump Assembly	1	90216-
1		702-21-57700	• Valve, Pilot	1	90216-
2		702-21-55870	• • O-ring	1	90216-
3		702-21-55880	• • O-ring	1	90216-
4		702-21-54180	• • Screw	2	90216-
5		702-21-55890	• • O-ring	2	90216-
6		01252-60635	• Bolt, Hexagon Socket Head	2	90216-
7		708-2G-15650	• Plug	1	90216-
8		07000-B1008	• O-ring	1	90216-
9		07001-01008	• Ring, Back-up	2	90216-
10		07002-61423	• O-ring	1	90216-
11		01643-51232	• Washer	1	90216-
12		01010-81220	• Bolt	1	90216-
13		08193-21012	• Clip	1	90216-
14		708-2G-03810	• Valve, Shuttle	1	90216-

FIG. H0210-006007A Hydraulic Pump (Fan Pump) (1/8)

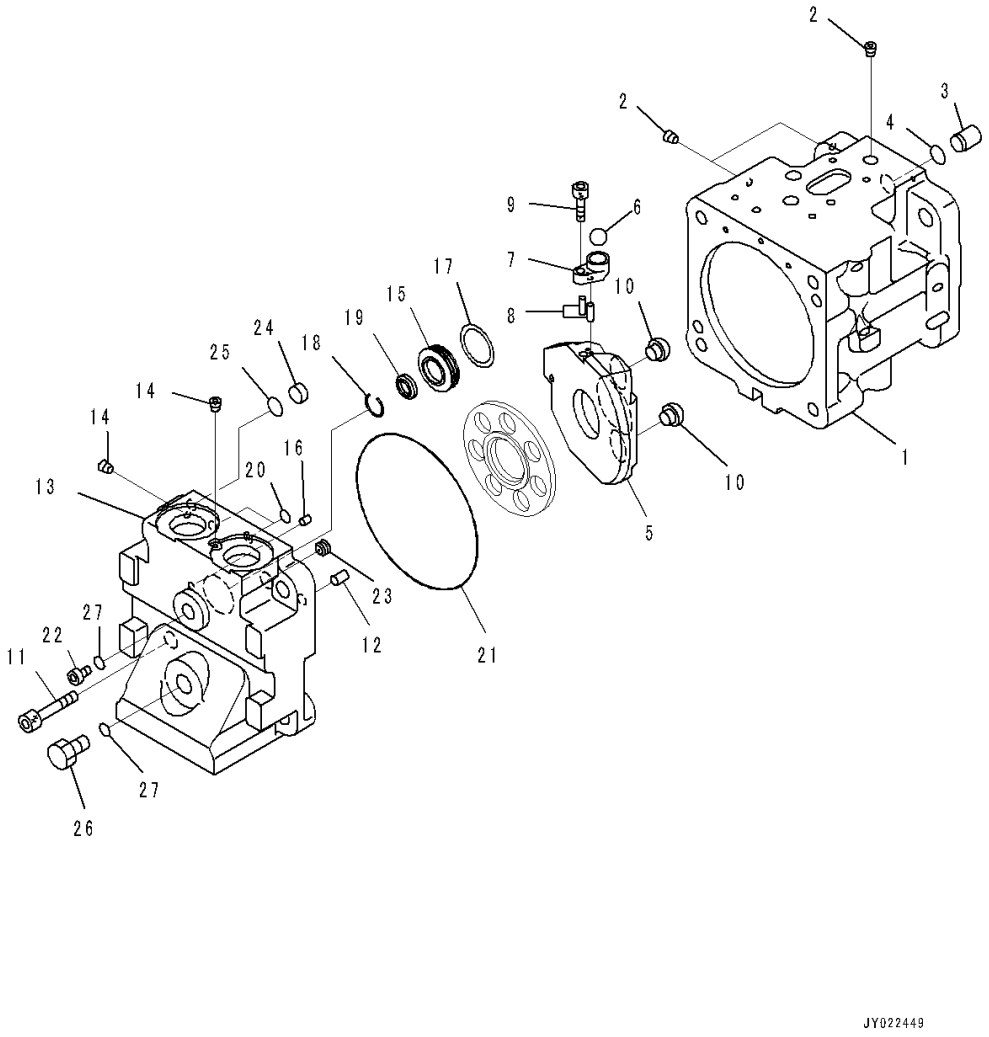

Index	Code	Part Number	Description	Qty	Serial Number
		Note: This list covers following specifications.			
		Without Emergency Steering, Automatic Control Type			
		With Emergency Steering, Automatic Control Type			
		708-1S-00970	Pump Assembly	1	91089-
	C2	708-1S-01970	• Pump Subassembly	1	91089-
	C2	708-1S-04440	• • Case Assembly	1	91089-
1	C1		• • • Case	1	91089-
2	C1		• • • Plug	10	91089-
3	C1		• • • Sleeve	1	91089-
4	C1		• • • Ring	1	91089-
5	C2	708-1S-13490	• • Cam, Rocker	1	91089-
6	C2	04260-01270	• • Ball	1	90216-
7	C2	708-3S-14141	• • Spacer	1	90216-
8	C2	708-1S-13420	• • Pin	2	90216-
9	C2	01252-60616	• • Bolt, Hexagon Socket Head	1	90216-
10	C2	708-1T-33432	• • Ball, Retainer	2	91089-
11	C2	01252-61235	• • Bolt, Hexagon Socket Head	4	90216-
12	C2	04020-01024	• • Pin, Dowel	2	90216-
	C2	708-1S-04530	• • Cap Subassembly	1	91089-
13	C1		• • • Cap, End	1	91089-
14	C1		• • • Plug	2	91089-
15	C2	708-1S-12260	• • Bearing	1	91089-
16	C2	720-68-19610	• • Pin	1	90216-
17	C2	708-7T-05030	• • Spacer Kit	1	91089-
	C1		• • • Spacer, T=1.6mm	1	91089-
	C1		• • • Spacer, T=1.7mm	1	91089-
	C1		• • • Spacer, T=1.8mm	1	91089-
	C1		• • • Spacer, T=1.9mm	1	91089-
	C1		• • • Spacer, T=2.0mm	1	91089-
	C1		• • • Spacer, T=2.1mm	1	91089-
	C1		• • • Spacer, T=2.2mm	1	91089-
	C1		• • • Spacer, T=1.5mm	1	91089-
18	C2	708-1S-12280	• • Ring, Wear	1	91089-
19	C2	708-1S-12330	• • Retainer	1	91089-
20	C2	07000-B1006	• • O-ring	2	91089-
21	C2	07000-B2130	• • O-ring	1	91089-
22		702-21-55620	• • Plug	1	90216-
23		708-3T-11310	• • Orifice	1	91089-
24		708-2L-25480	• • Filter	1	91089-
25		708-2L-25490	• • O-ring	1	91089-

FIG. H0210-006007A Hydraulic Pump (Fan Pump) (1/8)

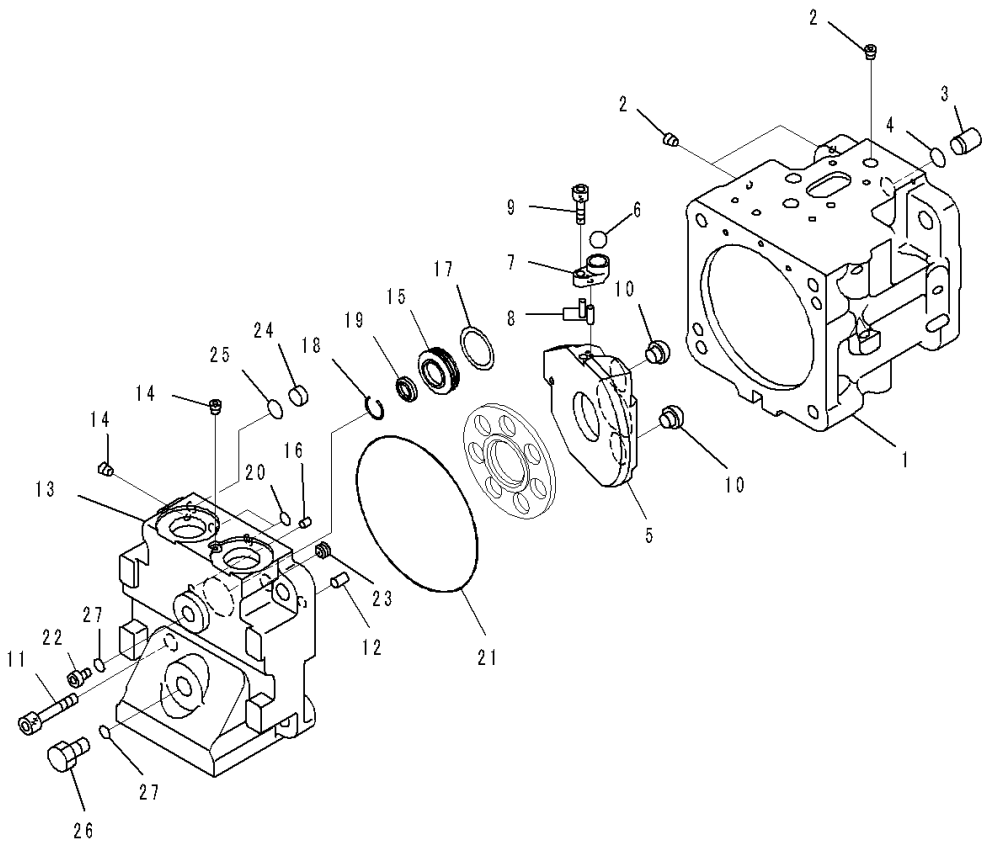

Index	Code	Part Number	Description	Qty	Serial Number
26		07040-11409	• • Plug	1	90216-
27		07002-61423	• • O-ring	2	91089-

FIG. H0210-006008A Hydraulic Pump (Fan Pump) (2/8)

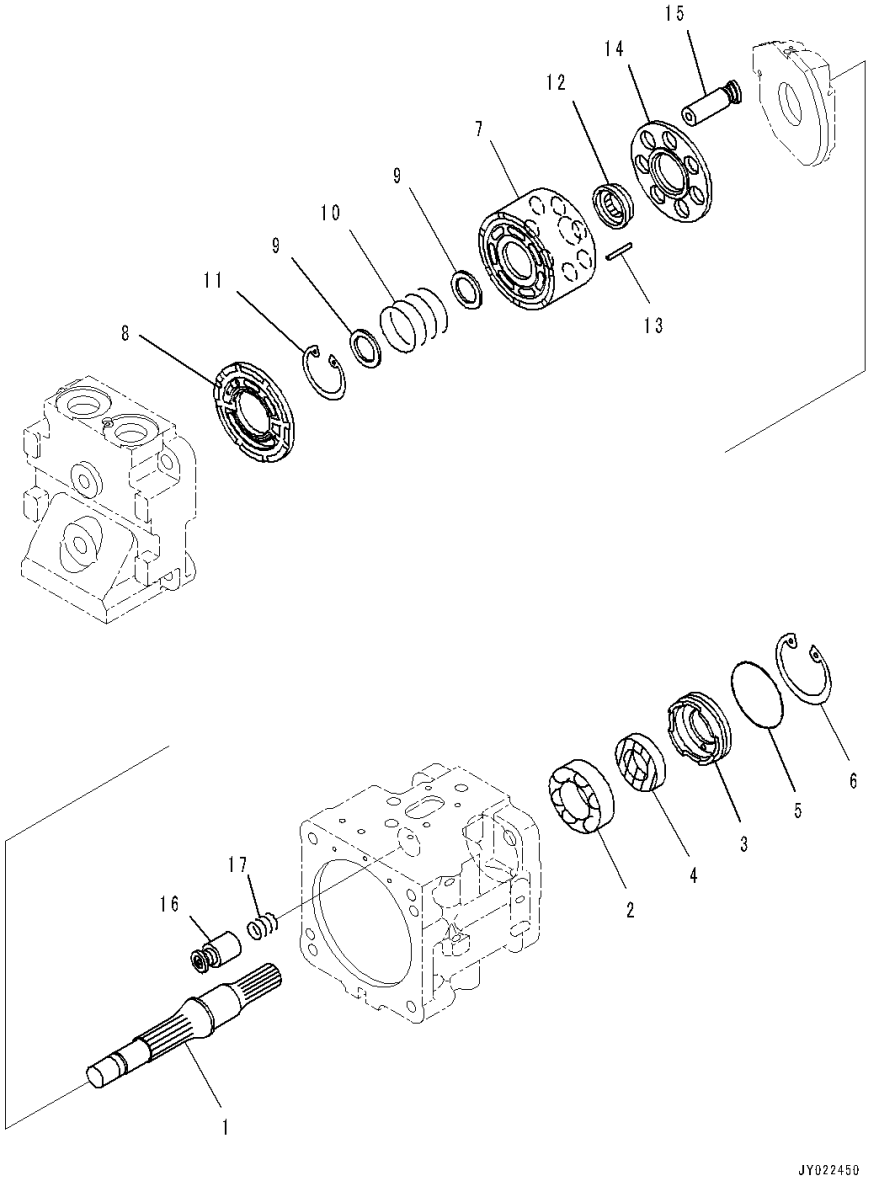

Index	Code	Part Number	Description	Qty	Serial Number
		Note: This list covers following specifications.			
		Without Emergency Steering, Automatic Control Type			
		With Emergency Steering, Automatic Control Type			
		708-1S-00970	Pump Assembly	1	91089-
		708-1S-01970	• Pump Subassembly	1	91089-
1	C2	708-1S-12320	• • Shaft	1	90216-
2	C2	706-73-40890	• • Bearing	1	90216-
3	C2	708-1S-12340	• • Case	1	90216-
4		708-21-12970	• • Seal, Oil	1	91089-
5		708-1S-12350	• • O-ring	1	91089-
6		04065-06220	• • Ring, Snap	1	90216-
7	C2	708-1S-13130	• • Block, Cylinder	1	90216-
8	C2	708-1S-13450	• • Plate, valve	1	90216-
9	C2	708-3S-13160	• • Washer	2	90216-
10	C2	708-3S-13430	• • Spring	1	90216-
11	C2	04065-03515	• • Ring, Snap	1	90216-
12	C2	708-1S-13370	• • Guide, Retainer	1	90216-
13	C2	708-1S-13380	• • Pin	3	90216-
14	C2	708-1S-13360	• • Retainer, Shoe	1	90216-
15	C2	708-1S-13320	• • Piston Subassembly	7	90216-
16	C2	708-3S-14290	• • Piston Subassembly	1	90216-
17	C2	708-1S-14241	• • Spring	1	90216-

FIG. H0210-006009 Hydraulic Pump (Fan Pump) (3/8)

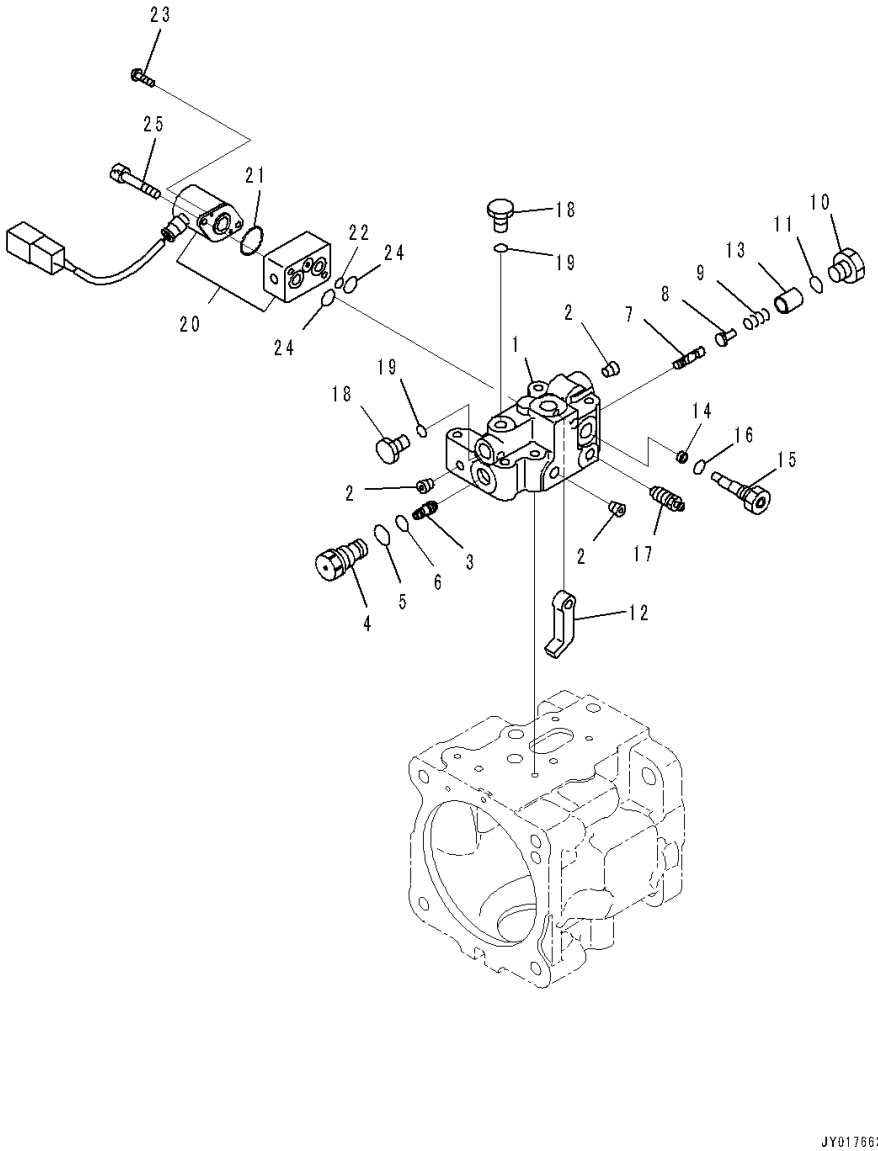

Index	Code	Part Number	Description	Qty	Serial Number
		Note: This list covers following specifications.			
		Without Emergency Steering, Automatic Control Type			
		With Emergency Steering, Automatic Control Type			
		708-1S-00970	Pump Assembly	1	91089-
	C2	708-1S-01970	• Pump Subassembly	1	91089-
1	C1		• • • • Body, Valve	1	90216-91088
2	C1		• • • • Plug	3	90216-91088
3	C1		• • • Piston	1	90216-91088
4	C1		• • • Sleeve	1	90216-91088
5		07002-21623	• • • O-ring	1	90216-91088
6		07000-B1010	• • • O-ring	1	90216-91088
7	C1		• • • Spool	1	90216-91088
8	C1		• • • Seat	1	90216-91088
9	C1		• • • Spring	1	90216-91088
10		723-56-31630	• • • Plug	1	90216-91088
11		07002-21623	• • • O-ring	1	90216-91088
12	C1		• • • Lever	1	90216-91088
13	C1		• • • Retainer	1	90216-91088
14	C1		• • • Spacer	1	90216-91088
15	C1		• • • Plug	1	90216-91088
16	C1		• • • O-ring	1	90216-91088
17		20B-27-11210	• • • Bleeder	1	90216-91088
18		07040-11007	• • • Plug	2	90216-91088
19		07002-21023	• • • O-ring	2	90216-91088
20		702-21-57700	• • • Valve, Pilot	1	90216-91088
21		702-21-55870	• • • • O-ring	1	90216-91088
22		702-21-55880	• • • • O-ring	1	90216-91088
23		702-21-54180	• • • • Screw	2	90216-91088
24		702-21-55890	• • • • O-ring	2	90216-91088
25		01252-60635	• • • Bolt, Hexagon Socket Head	2	90216-91088

FIG. H0210-006010 Hydraulic Pump (Fan Pump) (4/8)

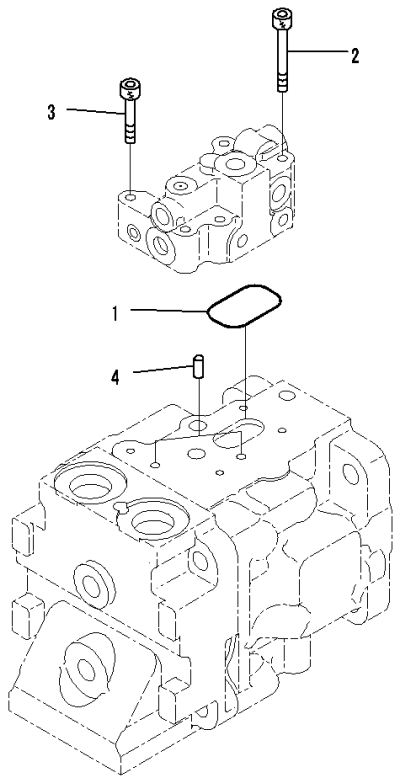

00032083

Index	Code	Part Number	Description	Qty	Serial Number
		Note: This list covers following specifications.			
		Without Emergency Steering, Automatic Control Type			
		With Emergency Steering, Automatic Control Type			
		708-1S-00970	Pump Assembly	1	91089-
	C2	708-1S-01970	• Pump Subassembly	1	91089-
1		07000-13040	• • O-ring	1	90216-91088
2		01252-60650	• • Bolt, Hexagon Socket Head	1	90216-91088
3		01252-60635	• • Bolt, Hexagon Socket Head	3	90216-91088
4	C2	04020-00616	• • Pin, Dowel	2	90216-91088

FIG. H0210-006011 Hydraulic Pump (Fan Pump) (5/8)

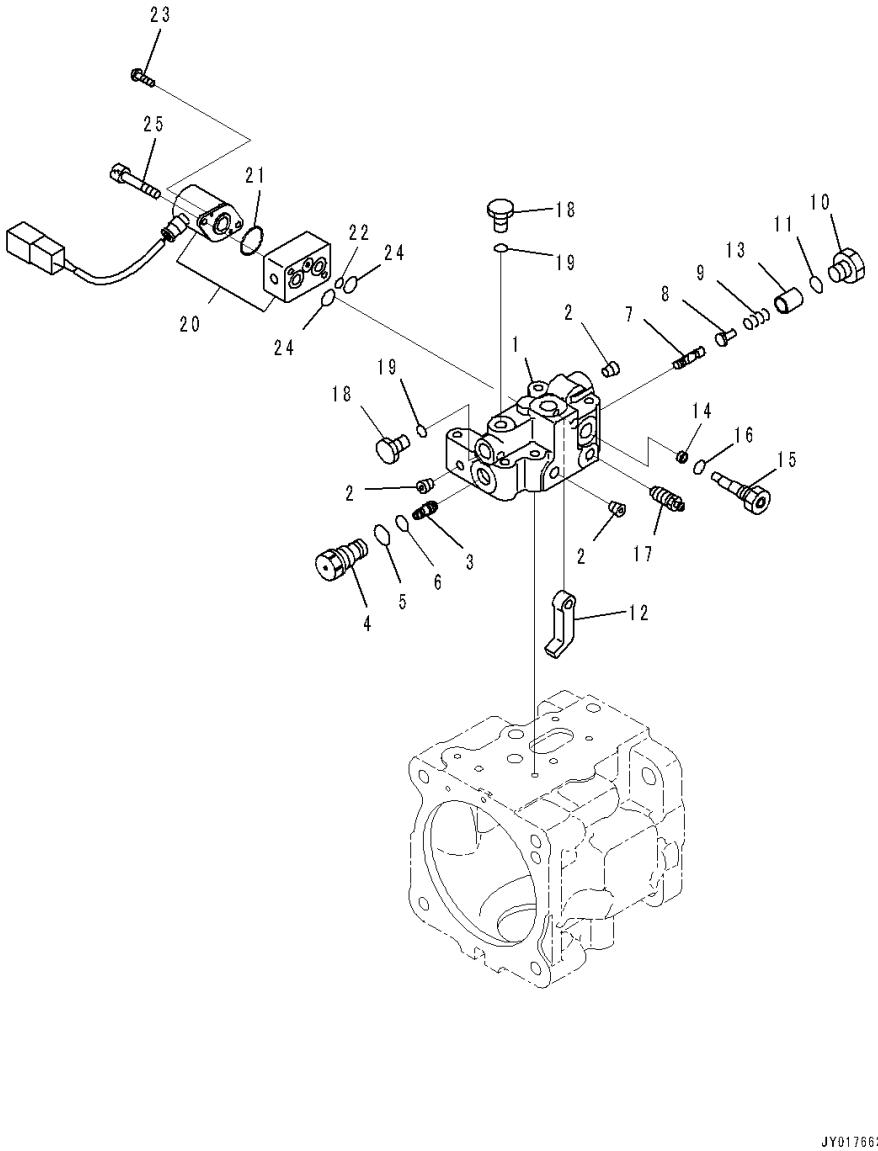

Index	Code	Part Number	Description	Qty	Serial Number
		Note: This list covers following specifications.			
		Without Emergency Steering, Automatic Control Type			
		With Emergency Steering, Automatic Control Type			
		708-1S-00970	Pump Assembly	1	91089-
	C2	708-1S-03340	• Valve Assembly	1	91089-
	C1		• • Body Subassembly	1	91089-
1	C1		• • • Body, Valve	1	91089-
2	C1		• • • Plug	3	91089-
3	C1		• • Piston	1	91089-
4	C1		• • Sleeve	1	91089-
5		07002-21623	• • O-ring	1	91089-
6		07000-B1010	• • O-ring	1	91089-
7	C1		• • Spool	1	91089-
8	C1		• • Seat	1	91089-
9	C1		• • Spring	1	91089-
10		723-56-31630	• • Plug	1	91089-
11		07002-21623	• • O-ring	1	91089-
12	C1		• • Lever	1	91089-
13	C1		• • Retainer	1	91089-
14	C1		• • Spacer	1	91089-
15	C1		• • Plug	1	91089-
16	C1		• • O-ring	1	91089-
17		20B-27-11210	• • Bleeder	1	91089-
18		07040-11007	• • Plug	2	91089-
19		07002-21023	• • O-ring	2	91089-
20		702-21-57700	• • Valve, Pilot	1	91089-
21		702-21-55870	• • • O-ring	1	91089-
22		702-21-55880	• • • O-ring	1	91089-
23		702-21-54180	• • • Screw	2	91089-
24		702-21-55890	• • • O-ring	2	91089-
25		01252-60635	• • Bolt, Hexagon Socket Head	2	91089-

FIG. H0210-006012 Hydraulic Pump (Fan Pump) (6/8)

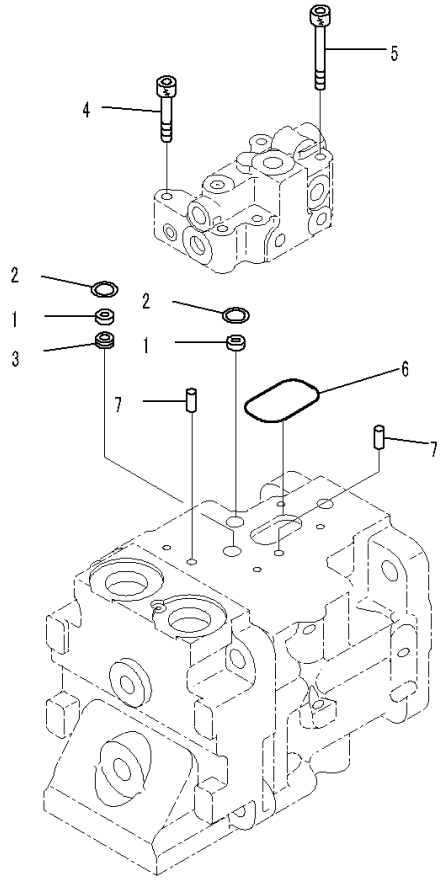

JY022451

Index	Code	Part Number	Description	Qty	Serial Number
		Note: This list covers following specifications.			
		Without Emergency Steering, Automatic Control Type			
		With Emergency Steering, Automatic Control Type			
		708-1S-00970	Pump Assembly	1	91089-
1		708-2L-25480	• Filter	2	91089-
2		708-2L-25490	• O-ring	2	91089-
3		708-1S-19710	• Orifice	1	91089-
4		01252-60635	• Bolt, Hexagon Socket Head	3	91089-
5		01252-60650	• Bolt, Hexagon Socket Head	1	91089-
6		07000-B3040	• O-ring	1	91089-
7		04020-00616	• Pin, Dowel	2	91089-

FIG. H0210-006013 Hydraulic Pump (Fan Pump) (7/8)

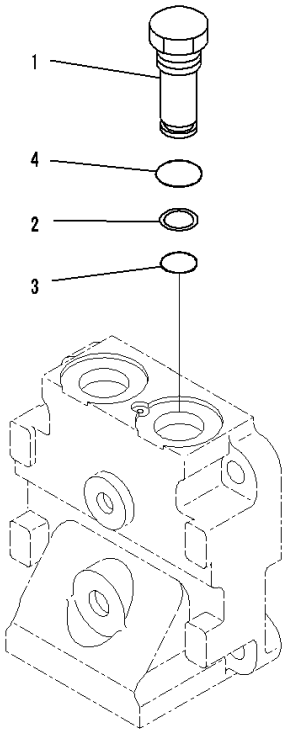

00032084

Index	Code	Part Number	Description	Qty	Serial Number
		Note: This list covers following specifications.			
		Without Emergency Steering, Automatic Control Type			
		With Emergency Steering, Automatic Control Type			
		708-1S-00970	Pump Assembly	1	91089-
1		708-1S-19930	• Plug	1	90216-
2		723-60-22230	• Ring, Back-up	1	90216-
3		07000-F2016	• O-ring	1	90216-
4		07002-62434	• O-ring	1	91089-

FIG. H0210-006014 Hydraulic Pump (Fan Pump) (8/8)

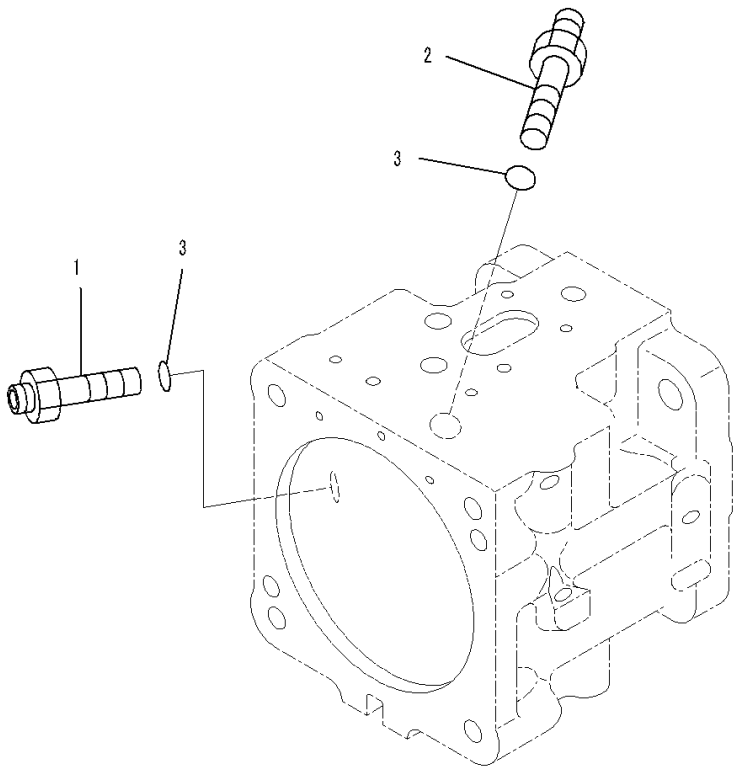

Index	Code	Part Number	Description	Qty	Serial Number
		Note: This list covers following specifications.			
		Without Emergency Steering, Automatic Control Type			
		With Emergency Steering, Automatic Control Type			
		708-1S-00970	Pump Assembly	1	91089-
1	C2	708-3S-14240	• Plug	1	91089-
2	C2	708-3S-14261	• Plug	1	91089-
3	C2	07002-61223	• O-ring	2	91089-

FIG. H0210-006015 Hydraulic Pump (Steering Pump) (1/4)

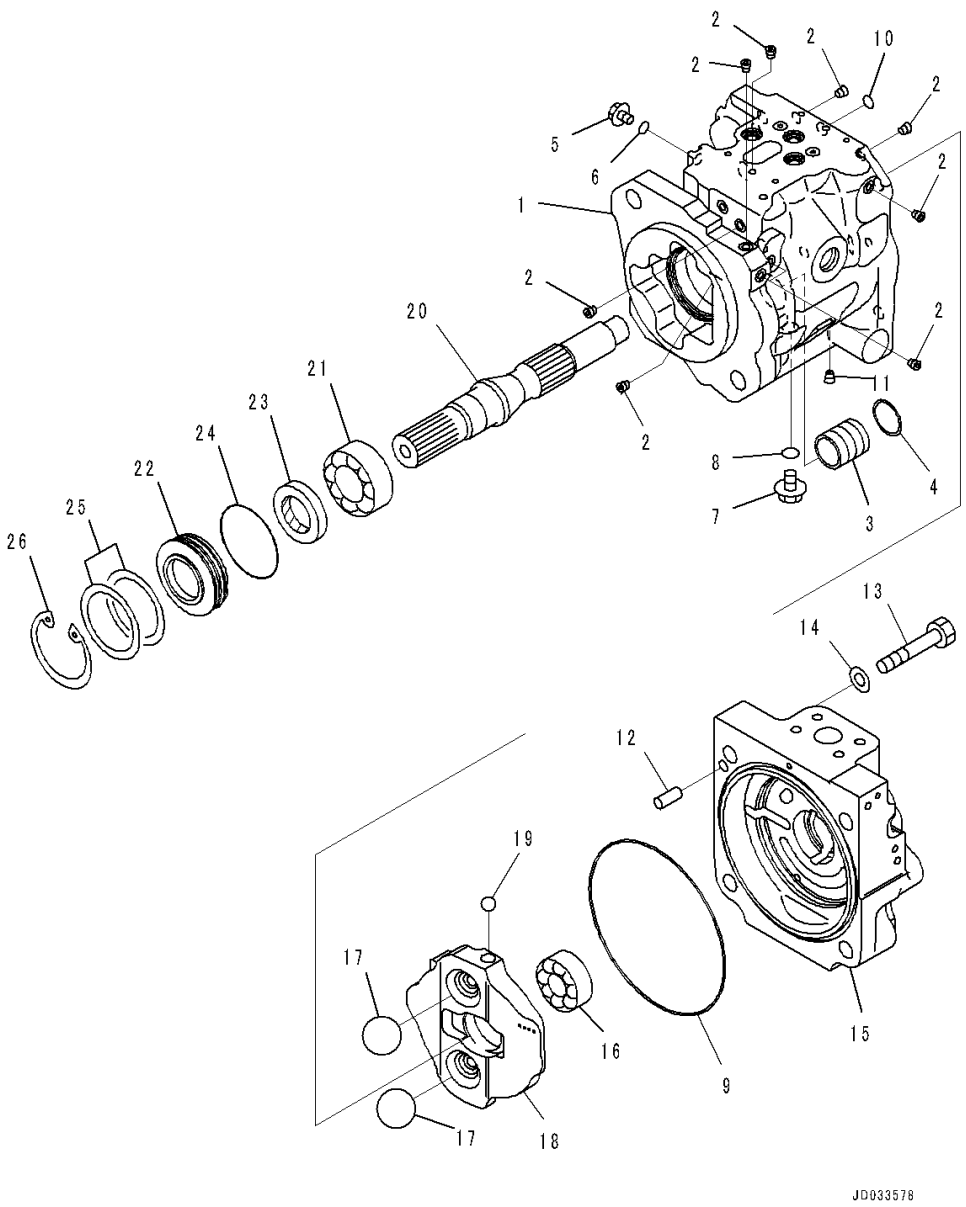

Index	Code	Part Number	Description	Qty	Serial Number
		Note: This list covers following specifications.			
			Without Emergency Steering, Automatic Control Type		
			With Emergency Steering, Automatic Control Type		
		708-1W-00771	Pump Assembly	1	90523-
	C2	708-1W-01771	• Pump Subassembly	1	90523-
	C2	708-1W-04020	• • Case Assembly	1	90216-
1	C1		• • • Case, Pump	1	90235-
2	C1		• • • Plug	9	90235-
3	C2	708-1W-44160	• • • Sleeve	1	90235-
4	C2	708-1W-44150	• • • Ring	1	90235-
5		708-8E-16160	• • Plug	1	90216-
6		07002-11023	• • O-ring	1	90216-
7		07040-11409	• • Plug	1	90216-
8		07002-11423	• • O-ring	1	90216-
9	C2	706-73-42370	• • O-ring	1	90216-
10	C2	07000-B1009	• • O-ring	1	90216-
11	C2	708-1L-29340	• • Orifice	1	90216-
12	C2	04020-01024	• • Pin, Dowel	1	90216-
13	C2	01010-61470	• • Bolt	4	90216-
14	C2	01643-31445	• • Washer, Flat	4	90216-
15	C2	708-1W-41660	• • Cap	1	90235-
16	C2	708-1W-42120	• • Bearing	1	90216-
17	C2	708-1W-43150	• • Ball, Retainer	2	90235-
18	C2	708-1W-43460	• • Cam, Rocker	1	90235-
19	C2	04260-01270	• • Ball	1	90216-
20	C2	708-1W-42150	• • Shaft	1	90235-
21	C2	708-1W-42110	• • Bearing	1	90216-
22	C2	708-1W-42140	• • Case	1	90216-
23		708-1W-42130	• • Seal, Oil	1	90216-
24		07000-B2060	• • O-ring	1	90216-
25	C2	708-1W-05821	• • Spacer Kit	1	90216-
	C1		• • • Spacer, T=2.5mm	1	90216-
	C1		• • • Spacer, T=2.55mm	1	90216-
	C1		• • • Spacer, T=2.6mm	1	90216-
	C1		• • • Spacer, T=2.65mm	1	90216-
	C1		• • • Spacer, T=2.7mm	1	90216-
	C1		• • • Spacer, T=2.75mm	1	90216-
	C1		• • • Spacer, T=2.8mm	1	90216-
	C1		• • • Spacer, T=2.85mm	1	90216-
	C1		• • • Spacer, T=2.9mm	1	90216-

FIG. H0210-006015 Hydraulic Pump (Steering Pump) (1/4)

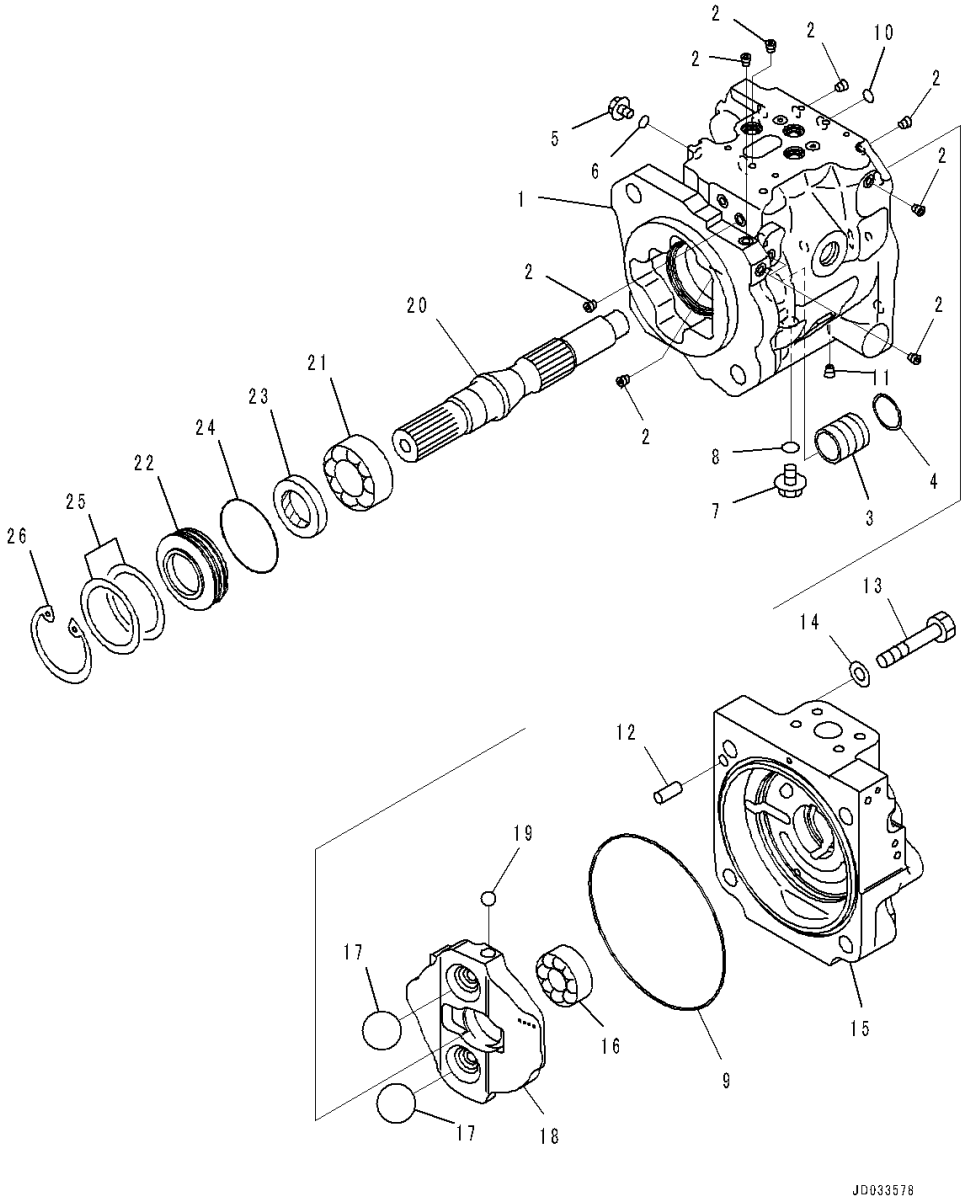

Index	Code	Part Number	Description	Qty	Serial Number
26		04065-06825	• • Ring, Snap	1	90216-

FIG. H0210-006016 Hydraulic Pump (Steering Pump) (2/4)

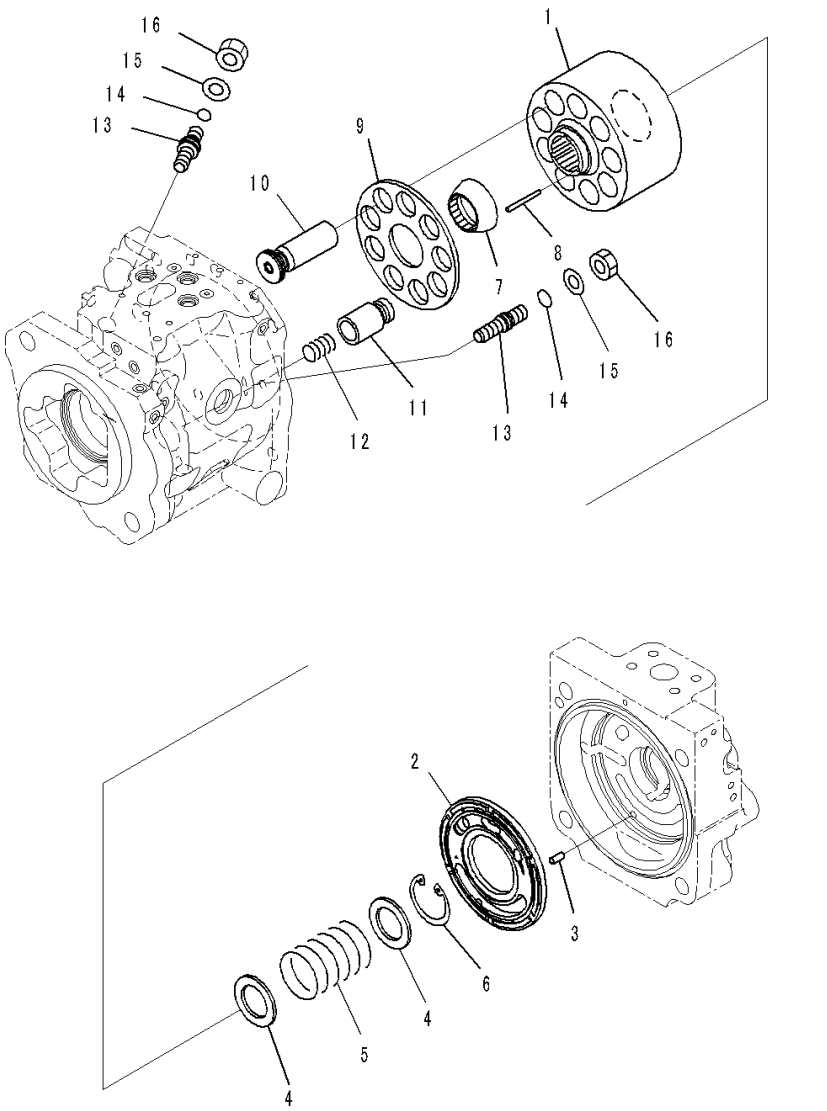

Index	Code	Part Number	Description	Qty	Serial Number
		Note: This list covers following specifications.			
		Without Emergency Steering, Automatic Control Type			
		With Emergency Steering, Automatic Control Type			
	C2	708-1W-01771	Pump Subassembly	1	90523-
		708-1W-00771	• Pump Assembly	1	90523-
	C2	708-1W-01771	• • Pump Subassembly	1	90523-
1	C2	708-1W-43110	• • • Block, Cylinder	1	90235-
2	C2	708-1W-43230	• • • Plate, Valve	1	90235-
3	C2	720-68-19610	• • • Pin	1	90216-
4	C2	708-1W-43130	• • • Seat	2	90216-
5	C2	708-1W-43140	• • • Spring	1	90216-
6	C2	04065-04818	• • • Ring, Snap	1	90216-
7	C2	708-1W-43320	• • • Guide, Retainer	1	90523-
8	C2	708-3T-13360	• • • Pin	3	90216-
9	C2	708-1W-43341	• • • Retainer, Shoe	1	90216-
10	C2	708-1U-13310	• • • Piston Subassembly	9	90216-
11	C2	708-1W-44170	• • • Piston	1	90235-
12	C2	708-1W-44140	• • • Spring	1	90235-
13	C2	708-1U-14240	• • • Screw	2	90216-
14	C2	07000-12011	• • • O-ring	2	90216-
15	C2	01643-31232	• • • Washer	2	90216-
16	C2	01582-11210	• • • Nut	2	90216-

FIG. H0210-006017 Hydraulic Pump (Steering Pump) (3/4)

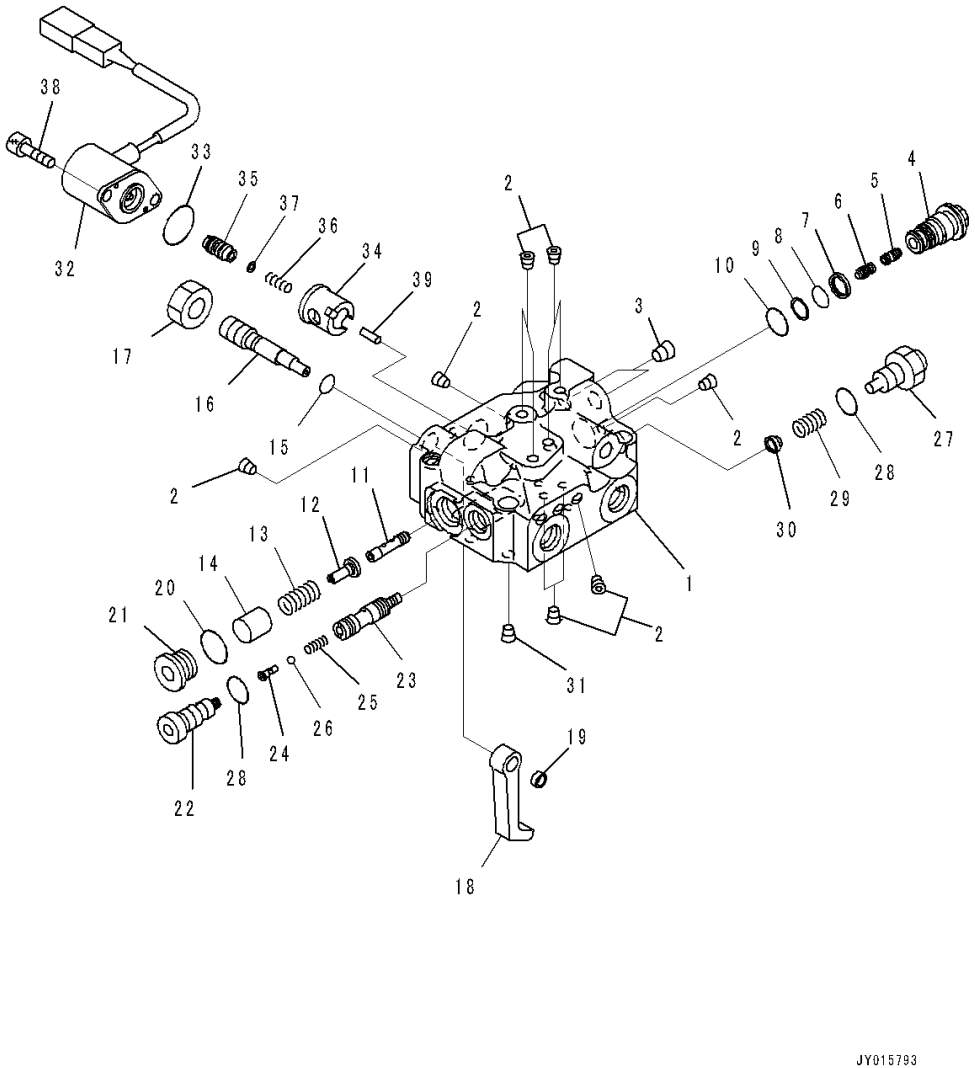

Index	Code	Part Number	Description	Qty	Serial Number
		Note: This list covers following specifications.			
		Without Emergency Steering, Automatic Control Type			
		With Emergency Steering, Automatic Control Type			
	C2	708-1W-03030	• Valve Assembly	1	90235-
	C1		• • Body Assembly	1	90216-
1	C1		• • • Body	1	90216-
2	C1		• • • Plug	12	90216-
3	C1		• • • Plug	2	90216-
	C2	708-1W-03020	• • Sleeve Subassembly	1	90216-
4	C1		• • • Sleeve	1	90216-
5	C1		• • • Piston	1	90216-
6	C1		• • • Piston	1	90216-
7	C1		• • • Seal	1	90216-
8	C1		• • • O-ring	1	90216-
9	C1		• • • Ring, Back-up	1	90216-
10	C1		• • • O-ring	1	90216-
11	C1		• • Spool	1	90216-
12	C1		• • Seat	1	90216-
13	C1		• • Spring	1	90235-
14	C1		• • Retainer	1	90216-
15	C1		• • O-ring	1	90216-
16	C1		• • Plug	1	90216-
17	C1		• • Nut	1	90216-
18	C1		• • Lever	1	90216-
19	C1		• • Spacer	1	90216-
20	C1		• • O-ring	1	90216-
21	C1		• • Plug	1	90216-
22	C1		• • Plug	1	90216-
	C1		• • Spool Subassembly	1	90216-
23	C1		• • • Spool	1	90216-
24	C1		• • • Plug	1	90216-
25	C1		• • • Spring	1	90216-
26	C1		• • • Ball	1	90216-
27	C1		• • Plug	1	90216-
		01583-11207	• • • Nut	1	90216-
28		07002-11223	• • O-ring	2	90216-
29	C1		• • Spring	1	90216-
30	C1		• • Seat	1	90216-
31	C2	708-1S-15930	• • Orifice	1	90216-90234
32		702-21-57410	• • Solenoid	1	90216-

FIG. H0210-006017 Hydraulic Pump (Steering Pump) (3/4)

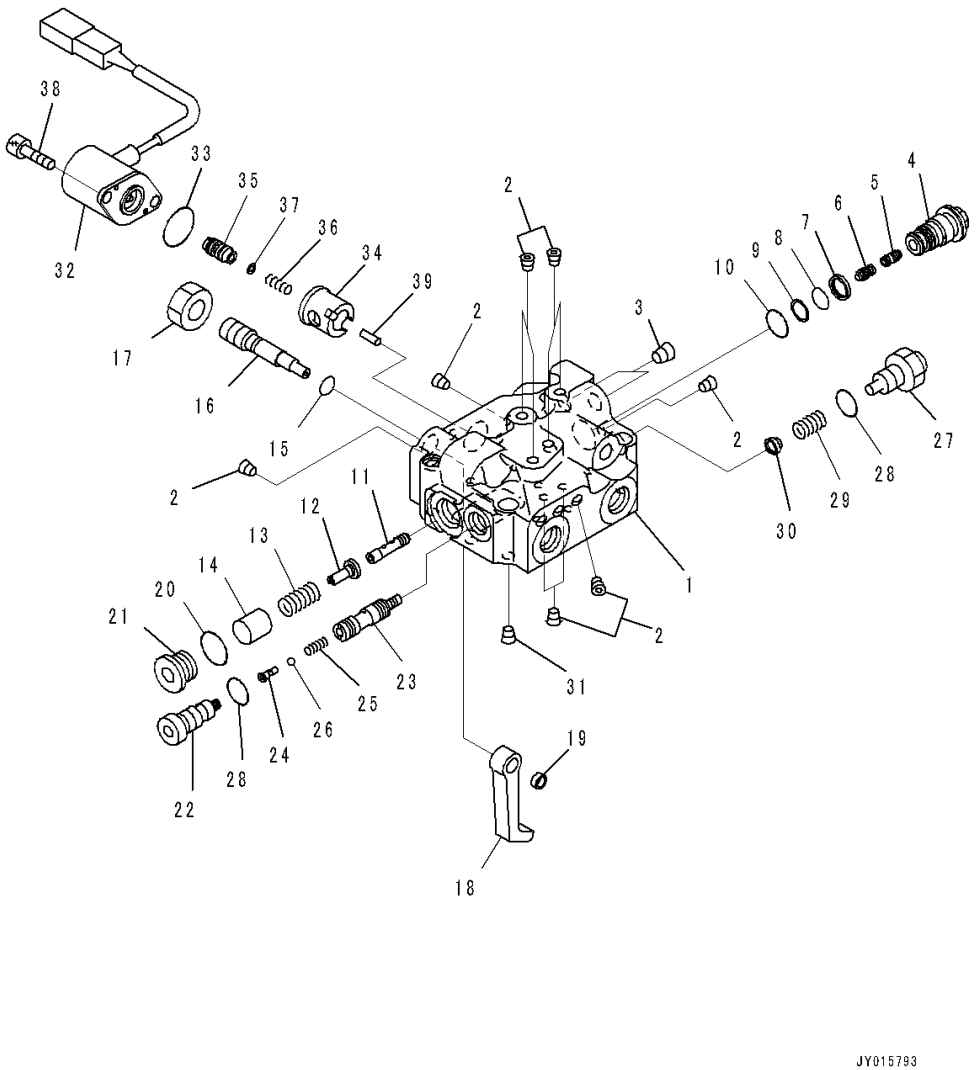

Index	Code	Part Number	Description	Qty	Serial Number
33		10S-914-4290	• • O-ring	1	90216-
34	C1		• • Sleeve	1	90216-
35	C1		• • Spool	1	90216-
36	C1		• • Spring	1	90216-
37	C1		• • Shim, T=1.0mm	1	90216-
38	C2	01252-60612	• • Bolt, Hexagon Socket Head	2	90216-
39	C1		• • Pin	1	90216-

FIG. H0210-006018A Hydraulic Pump (Steering Pump) (4/4)

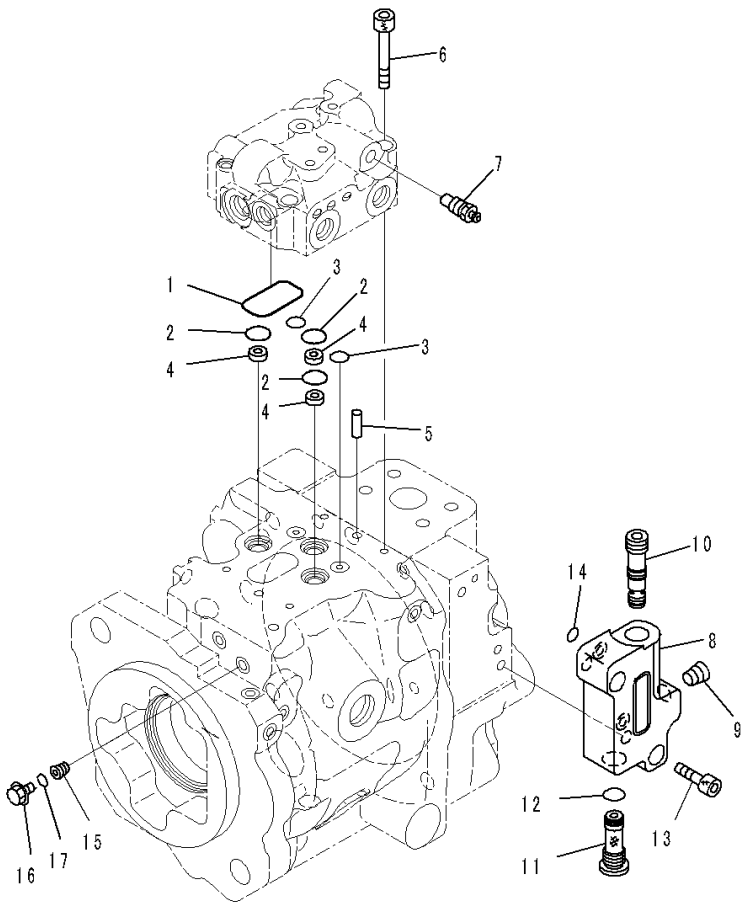

Index	Code	Part Number	Description	Qty	Serial Number
		Note: This list covers following specifications.			
		Without Emergency Steering, Automatic Control Type			
		With Emergency Steering, Automatic Control Type			
1		07000-13040	O-ring	1	90216-
2		07000-B2014	O-ring	3	90216-
3		07000-B1009	O-ring	2	90216-
4		708-2L-25480	Filter	3	90216-
5	C2	04020-00616	Pin, Dowel	2	90216-
6		01252-60640	Bolt, Hexagon Socket Head	4	90216-
7		20B-27-11210	Bleeder	1	90216-
		708-1W-03920	Block Assembly	1	90216-
	C2	708-1W-04590	• Block Subassembly	1	90216-
8	C1		• • Block	1	90216-
9	C1		• • Plug	1	90216-
10		708-1W-04580	• Valve Assembly, Shuttle	1	90216-
11		708-1W-04320	• Filter Assembly	1	90764-
12		07002-61423	• • O-ring	1	90764-
13		01252-60830	Bolt, Hexagon Socket Head	2	90216-
14		07000-B1009	O-ring	2	90216-
15	C2	723-46-16780	Orifice	1	90235-
16		708-8E-16160	Plug	1	90235-
17		07002-11023	O-ring	1	90235-

FIG. H0210-006019 Hydraulic Pump (Inner Parts, Torque Converter Pump) (1/2)

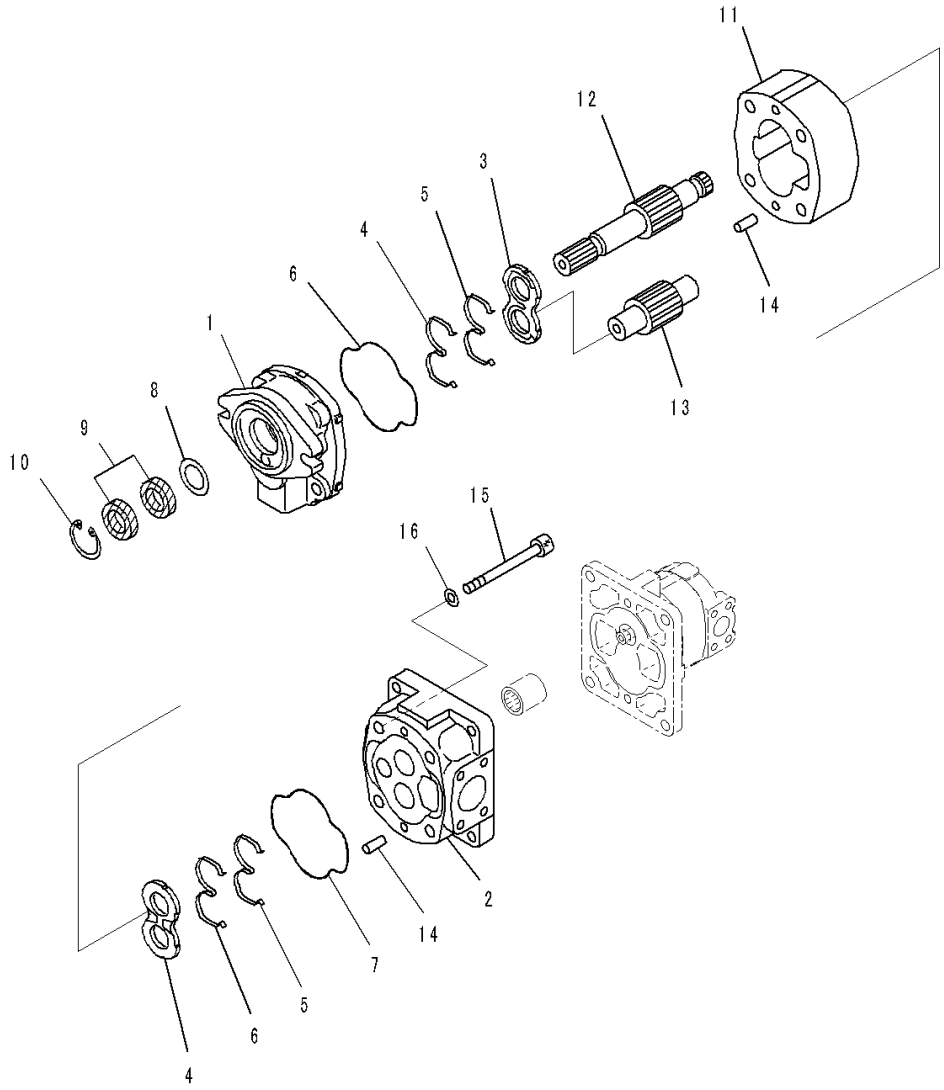

Index	Code	Part Number	Description	Qty	Serial Number
		Note: This list covers following specifications.			
		Without Emergency Steering, Automatic Control Type			
		With Emergency Steering, Automatic Control Type			
		705-51-30820	Pump Assembly, Gear (SAL 80 + 32)	1	90216-
		705-33-38260	• Pump Assembly, Gear (SAL 80)	1	90216-
1	C2	705-18-03580	• • Bracket Assembly	1	90216-
	C2	705-17-03352	• • • Bushing, Plane, Plane	2	90216-
2	C2	705-17-03220	• • Carrier Assembly	1	90216-
	C2	705-17-03352	• • • Bushing, Plane, Plane	2	90216-
3		705-17-03630	• • Plate, Side	1	90216-
4		705-17-03640	• • Plate, Side	1	90216-
5		705-17-03443	• • Ring, Back-up	2	90216-
6		705-17-03473	• • Seal	2	90216-
7		705-17-03381	• • O-ring	2	90216-
8		705-17-03870	• • Plate	1	90216-
9		705-17-03811	• • Seal, Oil	2	90216-
10		04065-05220	• • Ring, Snap	1	90216-
11	C2	705-17-38010	• • Gear Case	1	90216-
12	C2	705-19-38720	• • Gear, Drive	1	90216-
13	C2	705-17-38511	• • Gear, Driven	1	90216-
14		04020-01228	• • Pin, Dowel	4	90216-
15		01253-61625	• • Bolt	4	90216-
16		01643-51645	• • Washer	4	90216-

FIG. H0210-006020 Hydraulic Pump (Inner Parts, Torque Converter Pump) (2/2)

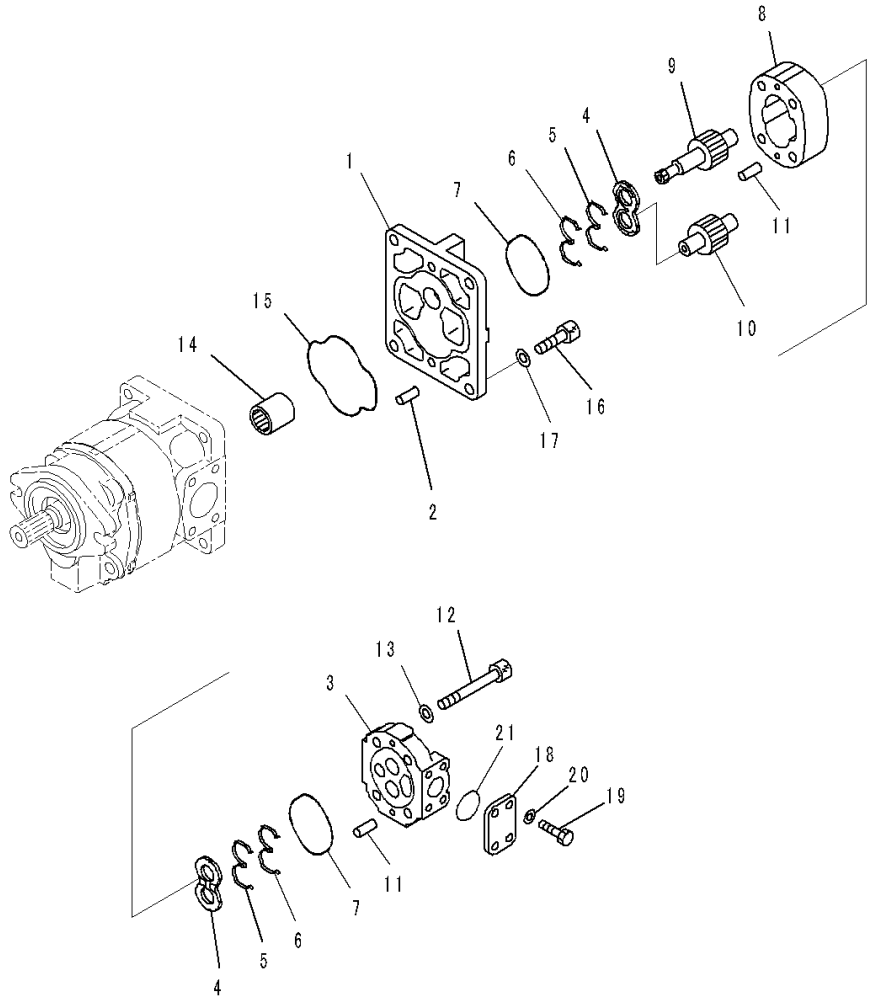

Index	Code	Part Number	Description	Qty	Serial Number
		Note: This list covers following specifications.			
		Without Emergency Steering, Automatic Control Type			
		With Emergency Steering, Automatic Control Type			
		705-51-30820	Pump Assembly, Gear (SAL 80 + 32)	1	90216-
		705-33-30540	• Pump Assembly, Gear (SAL 32)	1	90216-
1	C2	705-19-01521	• • Bracket	1	90216-
	C2	705-17-01351	• • • Bushing, Plane	2	90216-
2		04020-01228	• • Pin, Dowel	2	90216-
3	C2	705-17-01121	• • Cover Assembly	1	90216-
	C2	705-17-01351	• • • Bushing, Plane	2	90216-
4		705-17-01610	• • Plate, Side, Side	2	90216-
5		705-67-01440	• • Ring, Back-up	2	90216-
6		705-67-01470	• • Ring, Seal	2	90216-
7		705-67-01380	• • O-ring	2	90216-
8	C2	705-18-30110	• • Case	1	90216-
9	C2	705-18-30750	• • Gear, Drive	1	90216-
10	C2	705-18-30810	• • Gear, Driven	1	90216-
11		04020-00820	• • Pin, Dowel	4	90216-
12		01253-61200	• • Bolt	4	90216-
13		01643-51232	• • Washer	4	90216-
14		705-19-01330	• Coupling Assembly	1	90216-
15		705-17-03381	• O-ring	1	90216-
16		01252-61445	• Bolt, Hexagon Socket Head	4	90216-
17		705-17-04980	• Washer	4	90216-
18		705-17-01880	• Plate	1	90216-
19		01010-81025	• Bolt	4	90216-
20		01643-51032	• Washer	4	90216-
21		07000-E3032	• O-ring	1	90216-

FIG. H0210-006021 Hydraulic Pump (Mounting)

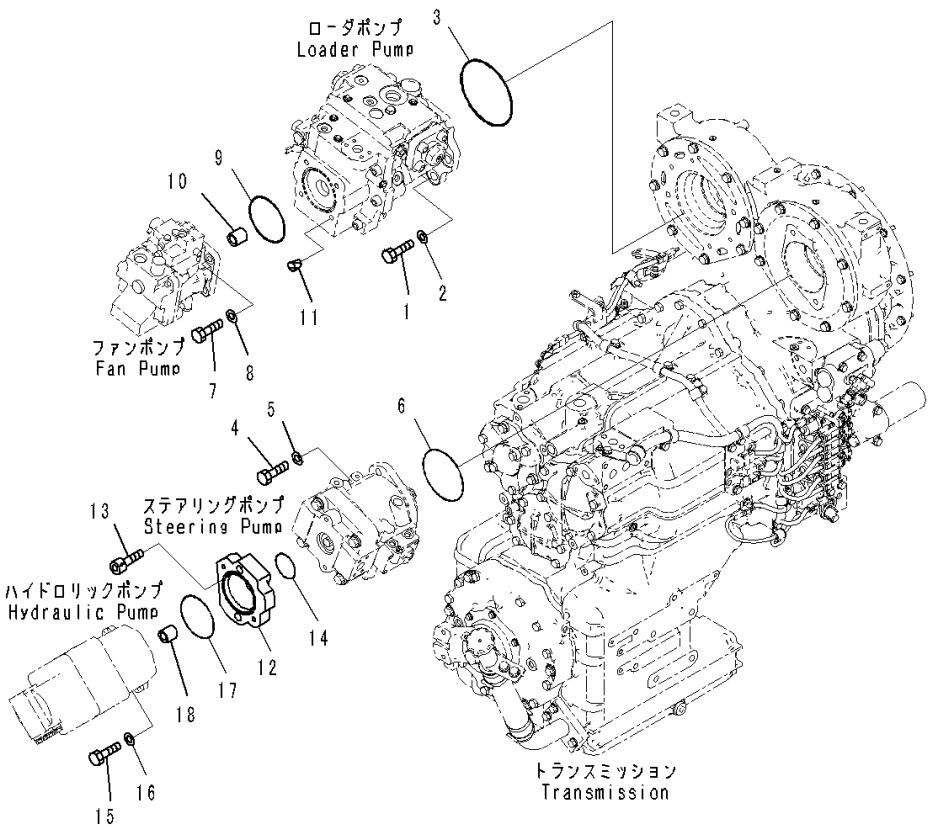

Index	Code	Part Number	Description	Qty	Serial Number
		Note: This list covers following specifications.			
		Without Emergency Steering, Automatic Control Type			
		With Emergency Steering, Automatic Control Type			
1		01010-81650	Bolt	4	90216-
2		01643-31645	Washer	4	90216-
3		07000-15160	O-ring	1	90216-
4		01010-81645	Bolt	2	90216-
5		01643-31645	Washer	2	90216-
6		07000-12130	O-ring	1	90216-
7		01010-81240	Bolt	3	90216-
8		01643-31232	Washer	3	90216-
9		07000-12110	O-ring	1	90216-
10		705-29-03310	Coupling Assembly	1	90216-
11		07049-01620	Plug	1	90216-
12		421-62-46880	Plate	1	90216-
13		01252-61250	Bolt, Hexagon Socket Head	2	90216-
14		07000-12060	O-ring	1	90216-
15		01010-81245	Bolt	2	90216-
16		01643-31232	Washer	2	90216-
17		07000-12110	O-ring	1	90216-
18		705-29-03310	Coupling Assembly	1	90216-

FIG. H0210-006022 Hydraulic Pump (Pump Suction)

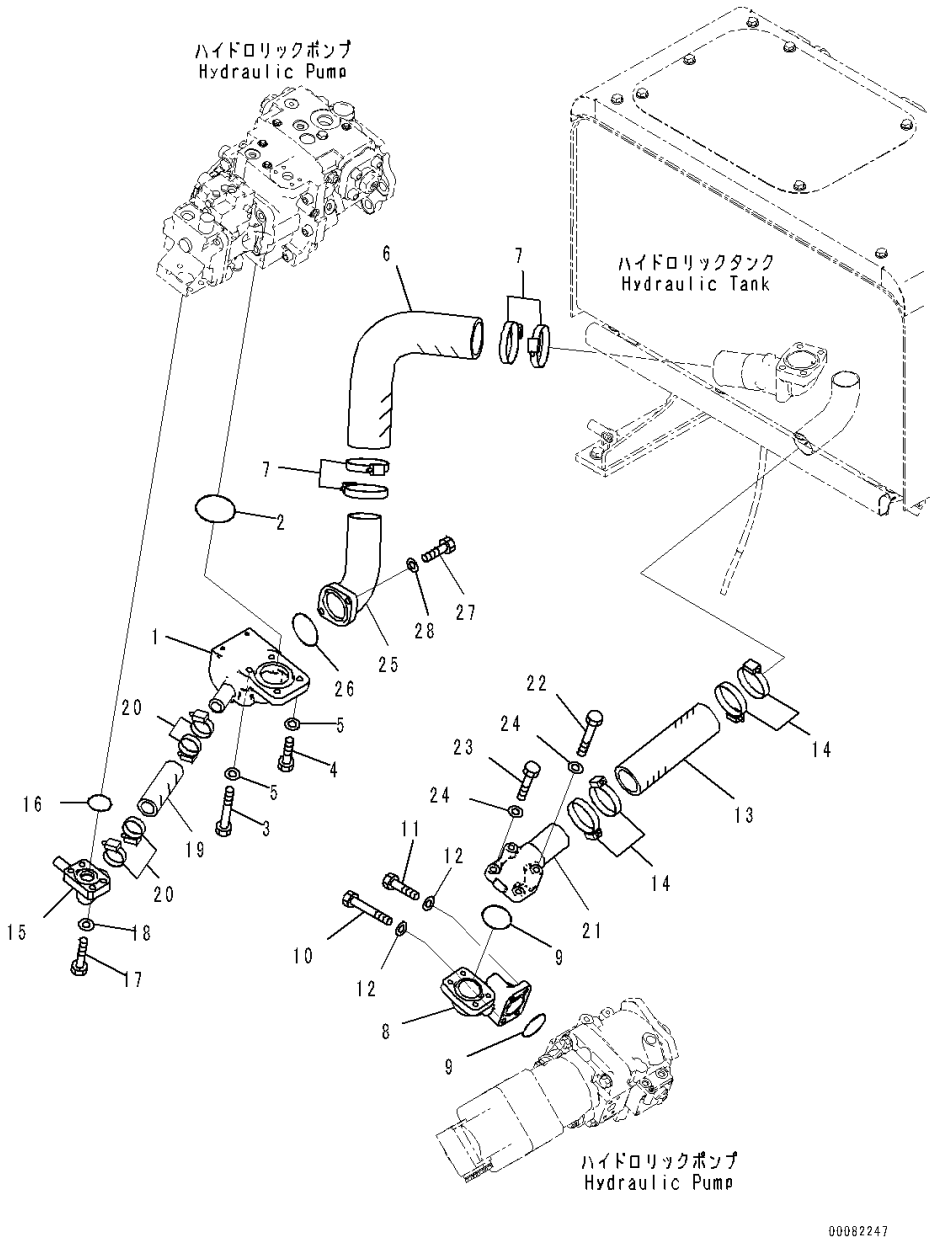

Index	Code	Part Number	Description	Qty	Serial Number
		Note: This list covers following specifications.			
		Without Emergency Steering, Automatic Control Type			
		With Emergency Steering, Automatic Control Type			
1		421-62-47440	Block	1	90216-
2		07000-12085	O-ring	1	90216-
3		01011-81215	Bolt	2	90216-
4		01010-81245	Bolt	2	90216-
5		01643-51232	Washer	4	90216-
6		421-62-45310	Hose	1	90216-
7		07289-00095	Clamp	4	90216-
8		421-62-43520	Elbow	1	90216-
9		07000-12060	O-ring	2	90216-
10		01010-81290	Bolt	2	90216-
11		01010-81240	Bolt	2	90216-
12		01643-51232	Washer	4	90216-
13		07260-05828	Hose	1	90216-
14		07289-00080	Clamp	4	90216-
15		421-62-44820	Tube	1	90216-
16		07000-13048	O-ring	1	90216-
17		07372-21245	Bolt	4	90216-
18		01643-51232	Washer	4	90216-
19		421-62-47460	Hose	1	90216-
20		07289-00045	Clamp	4	90216-
21		421-62-43830	Elbow	1	90216-
22		01010-81290	Bolt	2	90216-
23		01010-81240	Bolt	2	90216-
24		01643-51232	Washer	4	90216-
25		421-62-44830	Tube	1	90216-
26		07000-12075	O-ring	1	90216-
27		01010-81240	Bolt	2	90216-
28		01643-51232	Washer	2	90216-

FIG. H0210-006023 Hydraulic Pump (Steering Piping)

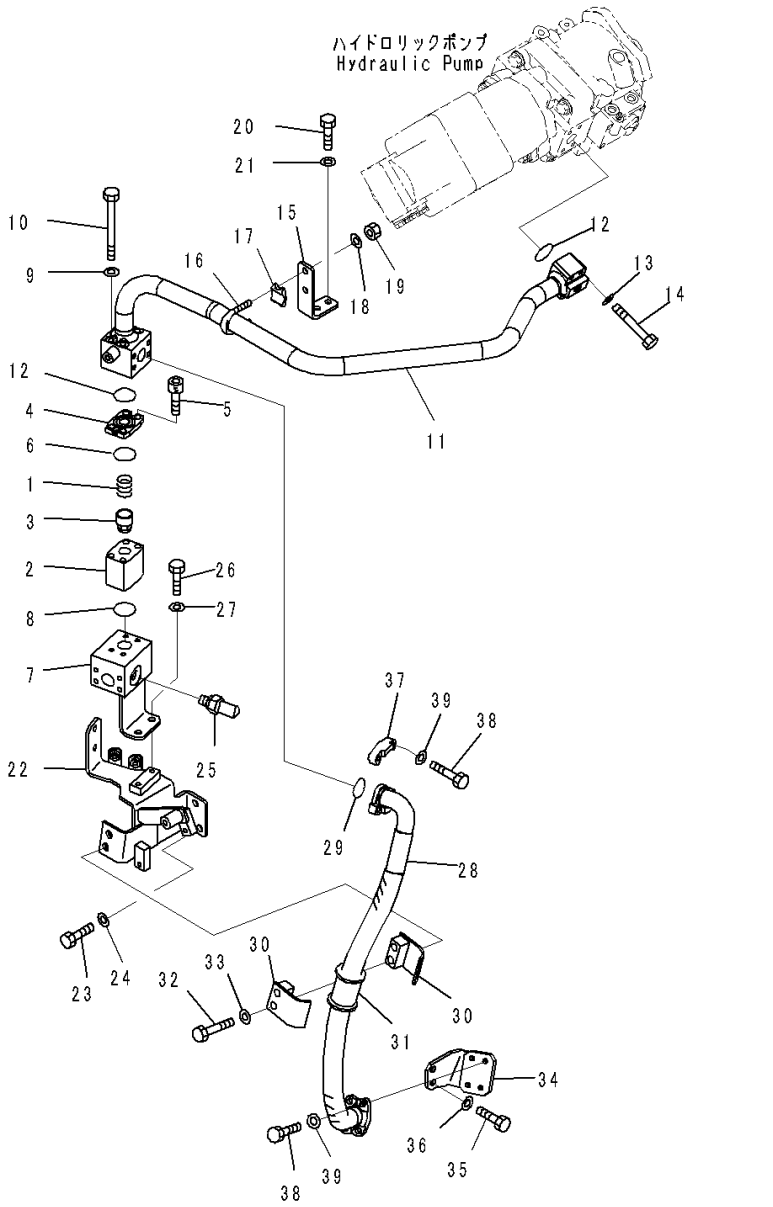

Index	Code	Part Number	Description	Qty	Serial Number
		Note: This list covers following specifications.			
		Without Emergency Steering, Automatic Control Type			
		With Emergency Steering, Automatic Control Type			
		421-62-32351	Valve Assembly, Check	1	90216-
1		421-62-32360	• Spring	1	90216-
2		702-13-22911	• Body	1	90216-
3		702-13-22921	• Poppet	1	90216-
4		702-13-22931	• Plate	1	90216-
5		708-25-12380	• Bolt	1	90216-
6		07000-23035	• O-ring	1	90216-
7		421-62-45320	Block	1	90216-
8		07000-13035	O-ring	1	90216-
9		01643-51032	Washer	4	90216-
10		01011-81050	Bolt	4	90216-
11		421-62-45331	Tube	1	90469-
12		07000-13035	O-ring	2	90216-
13		01643-51032	Washer	4	90216-
14		07372-21060	Bolt	4	90216-
15		421-62-45340	Bracket	1	90216-
16		07283-33450	Clip	1	90216-
17		07283-53444	Seat	1	90216-
18		01643-31032	Washer	2	90216-
19		01597-01009	Nut	2	90216-
20		01010-81025	Bolt	2	90216-
21		01643-31032	Washer	2	90216-
22		421-62-45351	Bracket	1	90216-
23		01010-81225	Bolt	2	90216-
24		01643-31232	Washer	2	90216-
25		7861-93-1653	Sensor	1	91112-
		07002-61823	• O-ring	1	90469-
26		01010-81025	Bolt	2	90216-
27		01643-31032	Washer	2	90216-
28		421-62-44321	Hose	1	90216-
29		07000-13032	O-ring	1	90216-
30		22P-62-13530	Clamp	2	90216-
31		07095-01035	Cushion	1	90216-
32		01010-81280	Bolt	2	90216-
33		01643-31232	Washer	2	90216-
34		421-62-45161	Bracket	1	90216-
35		01010-81025	Bolt	2	90216-

FIG. H0210-006023 Hydraulic Pump (Steering Piping)

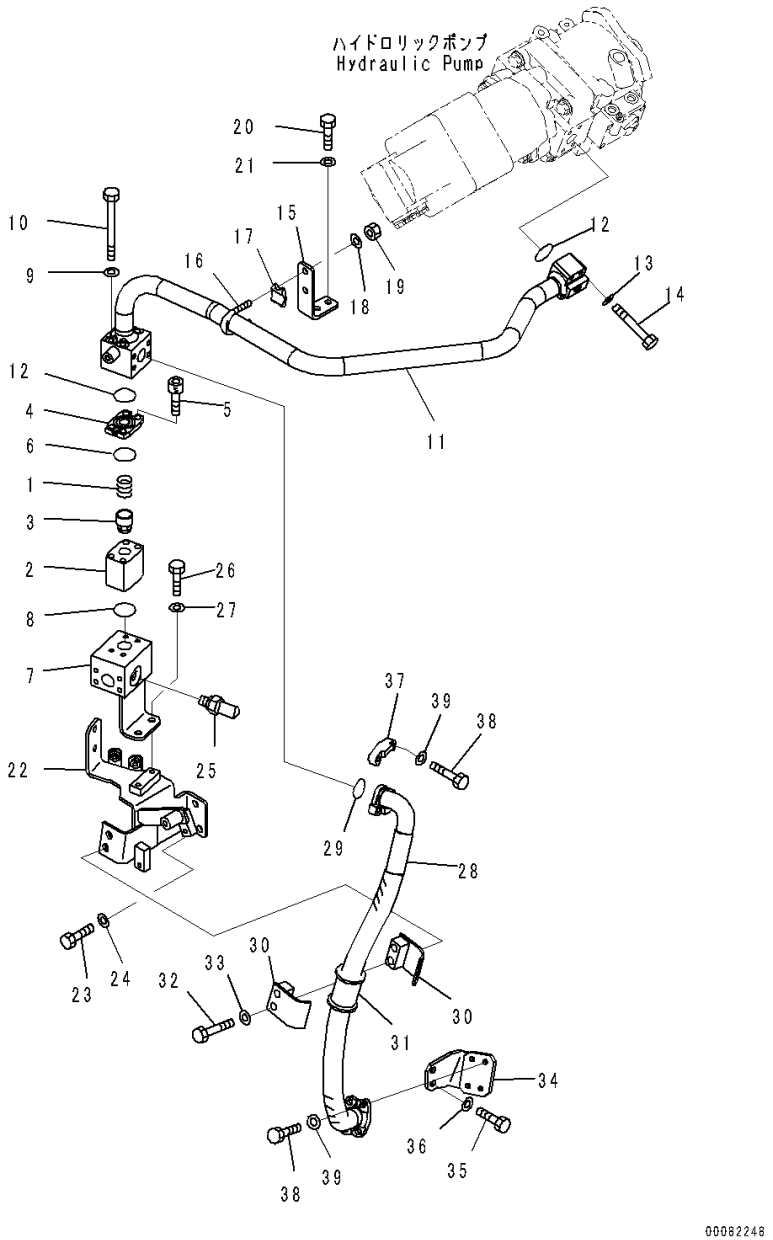

Index	Code	Part Number	Description	Qty	Serial Number
36		01643-31032	Washer	2	90216-
37		07371-31049	Flange, Split	4	90216-
38		07372-21035	Bolt	8	90216-
39		01643-51032	Washer	8	90216-

FIG. H0210-006024 Hydraulic Pump (Hydraulic Piping)

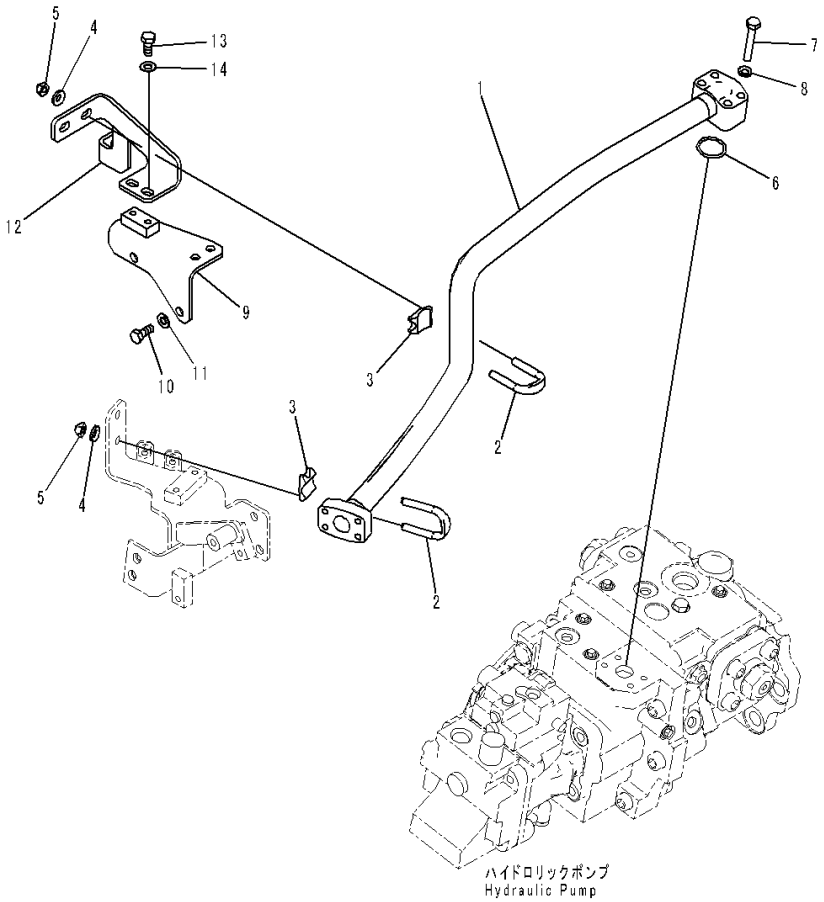

Index	Code	Part Number	Description	Qty	Serial Number
		Note: This list covers following specifications.			
		Without Emergency Steering, Automatic Control Type			
		With Emergency Steering, Automatic Control Type			
1		421-62-45370	Tube	1	90216-
2		07283-33450	Clip	2	90216-
3		07283-53444	Seat	2	90216-
4		01643-31032	Washer	4	90216-
5		01597-01009	Nut	4	90216-
6		07000-13035	O-ring	1	90216-
7		01010-81065	Bolt	4	90216-
8		01643-51032	Washer	4	90216-
9		421-62-45380	Bracket	1	90216-
10		01010-81230	Bolt	2	90216-
11		01643-31232	Washer	2	90216-
12		421-62-45390	Bracket	1	90216-
13		01010-81020	Bolt	2	90216-
14		01643-31032	Washer	2	90216-

FIG. H0210-006025 Hydraulic Pump (Transmission Piping)

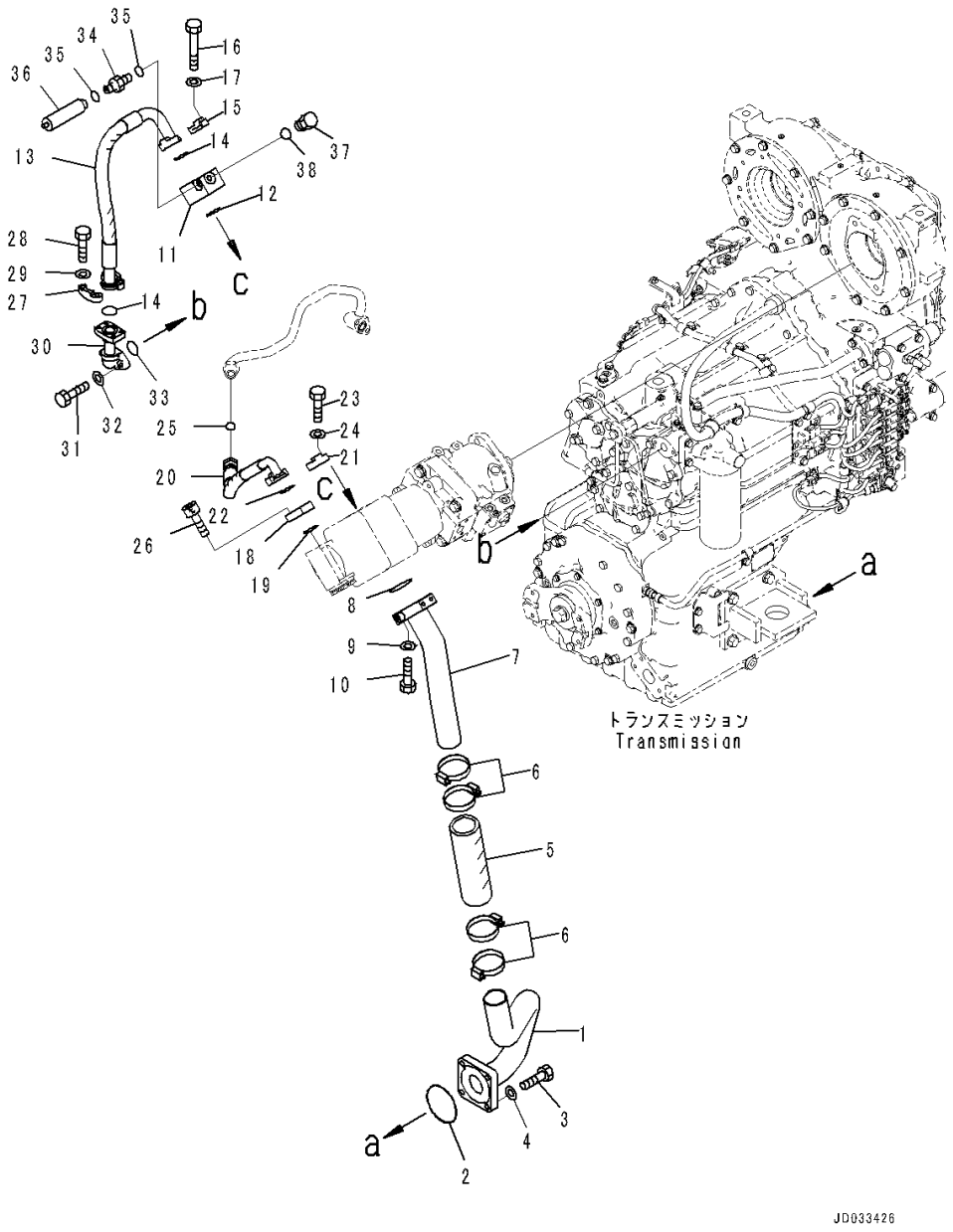

Index	Code	Part Number	Description	Qty	Serial Number
		Note: This list covers following specifications.			
		Without Emergency Steering, Automatic Control Type			
		With Emergency Steering, Automatic Control Type			
1		421-62-45910	Tube	1	90216-
2		07000-A2100	O-ring	1	90216-
3		01010-81245	Bolt	4	90216-
4		01643-31232	Washer	4	90216-
5		07260-05825	Hose	1	90216-
6		07289-00080	Clamp	4	90216-
7		421-62-45920	Tube	1	90216-
8		07000-A2060	O-ring	1	90216-
9		01643-31232	Washer	4	90216-
10		07372-21250	Bolt	4	90216-
11		421-62-47920	Block	1	90216-
12		07000-A3032	O-ring	1	90216-
13		421-62-47930	Hose	1	90216-
14		07000-A3032	O-ring	2	90216-
15		07371-31049	Flange, Split	2	90216-
16		205-62-74740	Bolt	4	90216-
17		01643-51032	Washer	4	90216-
18		421-62-45840	Flange	1	90216-
19		07000-A3025	O-ring	1	90216-
20		421-62-45930	Hose	1	90216-
21		07371-30640	Flange, Split	2	90216-
22		07000-A3025	O-ring	1	90216-
23		07372-21035	Bolt	4	90216-
24		01643-51032	Washer	4	90216-
25		02896-61018	O-ring	1	90216-
26		01252-60825	Bolt, Hexagon Socket Head	4	90216-
27		07371-31049	Flange, Split	2	90216-
28		07372-21035	Bolt	4	90216-
29		01643-51032	Washer	4	90216-
30		421-62-45250	Tube	1	90216-
31		01010-81035	Bolt	2	90216-
32		01643-31032	Washer	2	90216-
33		07000-A3032	O-ring	1	90216-
34		423-43-27490	Nipple	1	90216-
35		07002-61423	O-ring	2	90216-
36		424-43-37100	Accumulator	1	90216-
37		07040-11409	Plug	1	90216-

FIG. H0210-006025 Hydraulic Pump (Transmission Piping)

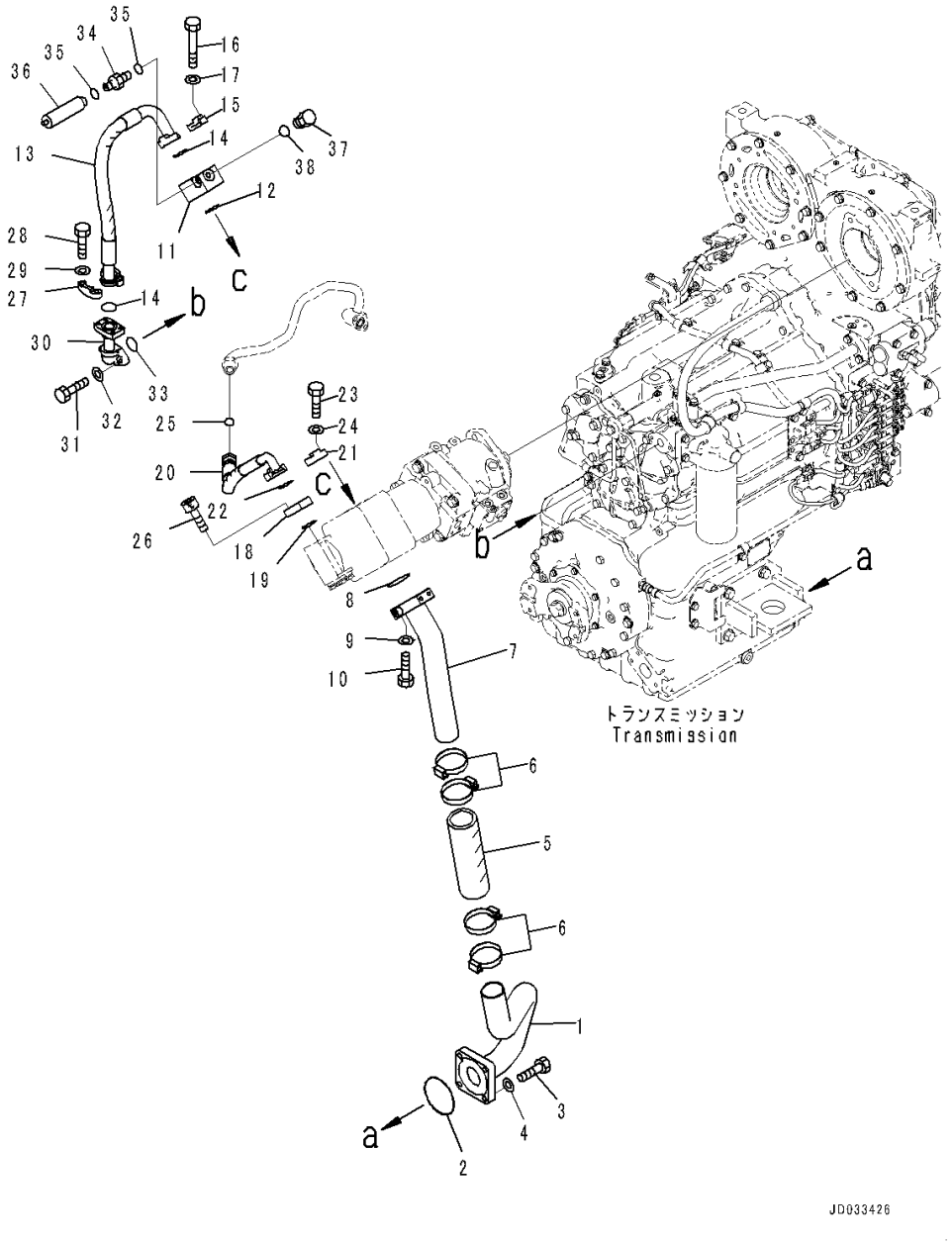

Index	Code	Part Number	Description	Qty	Serial Number
38		07002-61423	O-ring	1	90216-

FIG. H0210-006026 Hydraulic Pump (Without Emergency Steering, Automatic Control Type) (Bracket)

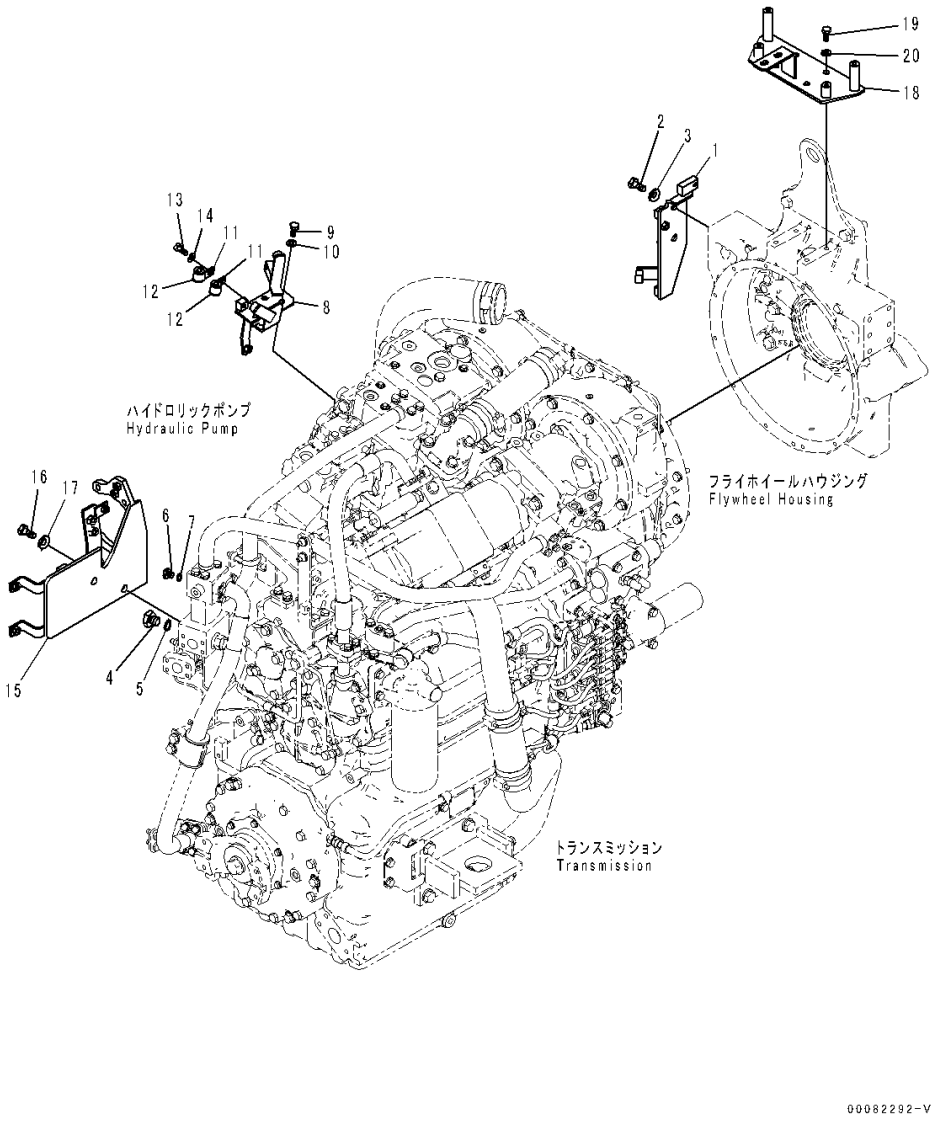

Index	Code	Part Number	Description	Qty	Serial Number
1		421-62-45860	Bracket	1	90216-
2		01010-81430	Bolt	2	90216-
3		01643-31445	Washer, Flat	2	90216-
4		07040-12412	Plug	1	90216-
5		07002-12434	O-ring	1	90216-
6		07040-11409	Plug	1	90216-
7		07002-11423	O-ring	1	90216-
8		421-62-45430	Bracket	1	90216-
9		01010-81025	Bolt	2	90216-
10		01643-31032	Washer	2	90216-
11		04434-51710	Clip	2	90216-
12		07095-20211	Cushion	2	90216-
13		01010-81025	Bolt	1	90216-
14		01643-31032	Washer	1	90216-
15		421-62-45470	Bracket	1	90216-
16		01010-81635	Bolt	2	90216-
17		01643-31645	Washer	2	90216-
18		421-62-41750	Bracket	1	90216-
19		01010-81230	Bolt	4	90216-
20		01643-31232	Washer	4	90216-

FIG. H0210-006027 Hydraulic Pump (LS Piping)

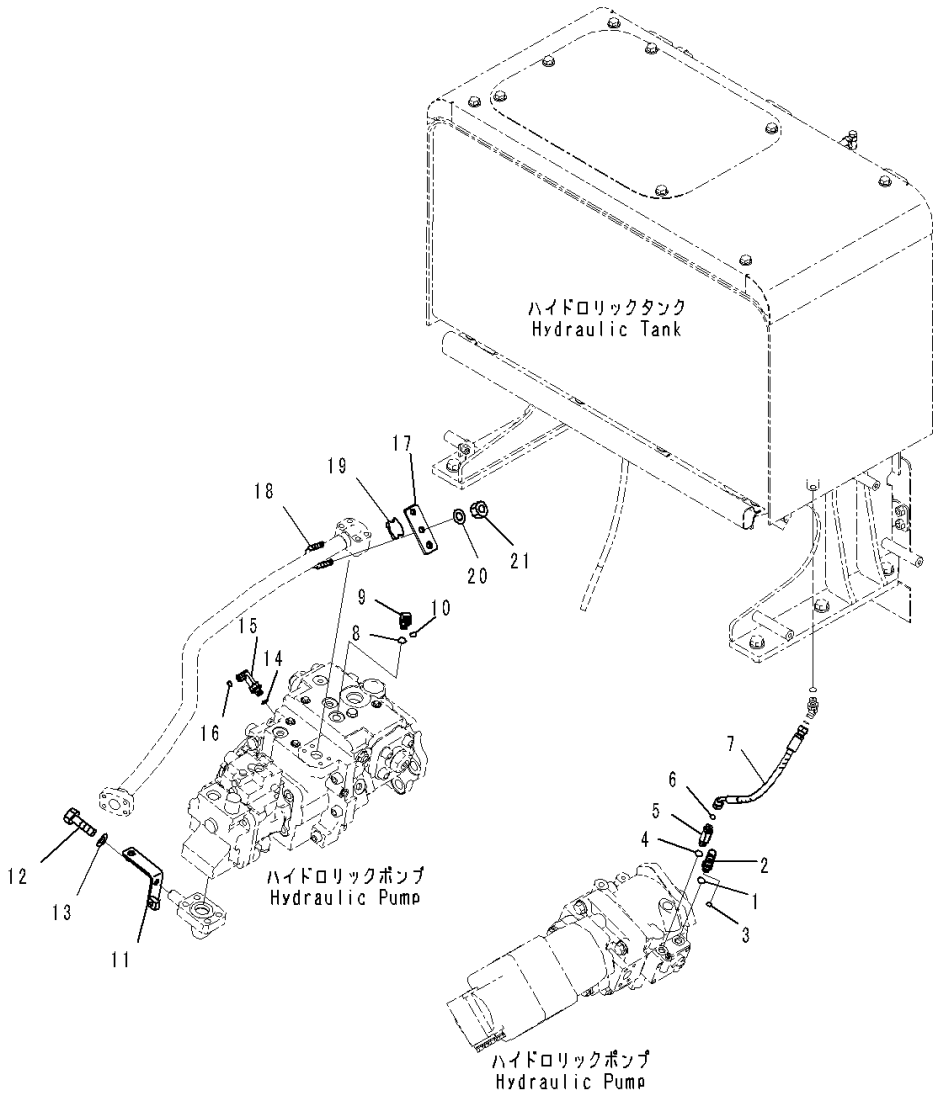

Index	Code	Part Number	Description	Qty	Serial Number
		Note: This list covers following specifications.			
		Without Emergency Steering, Automatic Control Type			
		With Emergency Steering, Automatic Control Type			
1		07002-11423	O-ring	1	90216-
2		02782-1021A	Elbow	1	90216-
3		02896-11008	O-ring	1	90216-
4		07002-11423	O-ring	1	90216-
5		20U-62-41890	Nipple	1	90216-
6		02896-11008	O-ring	1	90216-
7		421-62-45570	Hose	1	90216-
8		07002-11423	O-ring	1	90216-
9		421-62-46730	Elbow	1	90216-
10		02896-11008	O-ring	1	90216-
11		421-62-45790	Bracket	1	90216-
12		01010-81020	Bolt	1	90216-
13		01643-31032	Washer	1	90216-
14		07002-11423	O-ring	1	90216-
15		02782-1021A	Elbow	1	90216-
16		02896-11008	O-ring	1	90216-
17		421-62-45630	Plate	1	90216-
18		07283-33450	Clip	1	90216-
19		07283-53444	Seat	1	90216-
20		01643-31032	Washer	2	90216-
21		01597-01009	Nut	2	90216-

FIG. H0210-006028 Hydraulic Pump (Drain Piping)

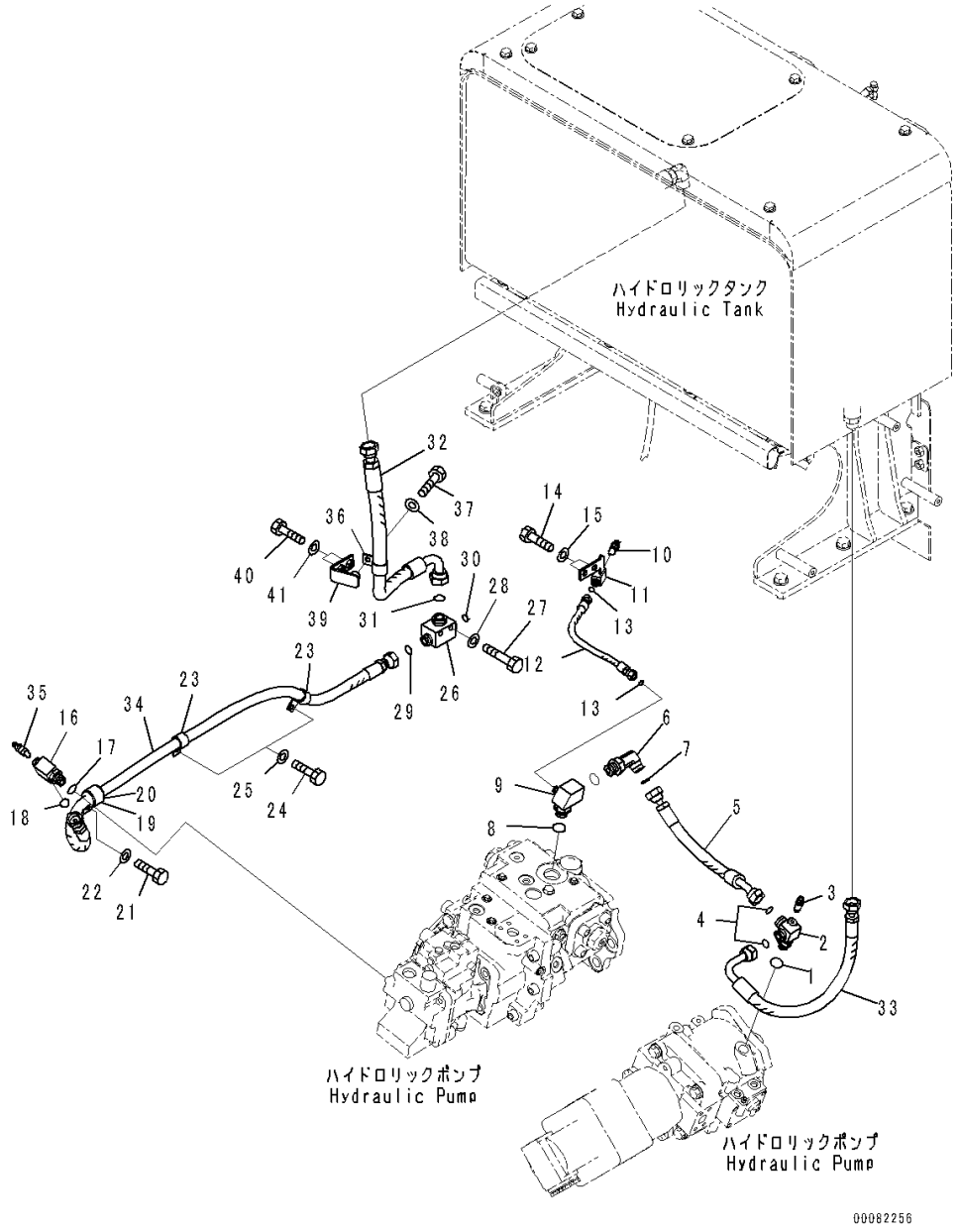

Index	Code	Part Number	Description	Qty	Serial Number
		Note: This list covers following specifications.			
		Without Emergency Steering, Automatic Control Type			
		With Emergency Steering, Automatic Control Type			
1		07002-12434	O-ring	1	90216-
2		421-62-43990	Tee	1	90216-
3		20B-27-11210	Bleeder	1	90216-
4		02896-11015	O-ring	2	90216-
5		421-62-46610	Hose	1	90216-
6		02782-1052A	Elbow	1	90216-
7		02896-11015	O-ring	1	90216-
8		07002-12434	O-ring	1	90216-
9		421-62-46710	Elbow	1	90216-
10		20B-27-11210	Bleeder	1	90216-
11		421-62-45540	Joint	1	90216-
12		421-62-45520	Hose	1	90216-
13		02896-11008	O-ring	2	90216-
14		01010-81020	Bolt	2	90216-
15		01643-31032	Washer	2	90216-
16		421-62-42730	Elbow	1	90216-
17		07002-12034	O-ring	1	90216-
18		02896-11015	O-ring	1	90216-
19		04434-53411	Clip	1	90216-
20		07095-20522	Cushion	1	90216-
21		01010-81020	Bolt	1	90216-
22		01643-31032	Washer	1	90216-
23		04434-52310	Clip	2	90216-
24		01010-81020	Bolt	2	90216-
25		01643-31032	Washer	2	90216-
26		421-62-41470	Block	1	90216-
27		01010-81060	Bolt	2	90216-
28		01643-31032	Washer	2	90216-
29		02896-11015	O-ring	1	90216-
30		02896-11012	O-ring	1	90216-
31		02896-11018	O-ring	1	90216-
32		421-62-45580	Hose	1	90216-
33		421-62-45590	Hose	1	90216-
34		421-62-45610	Hose	1	90216-
35		20B-27-11210	Bleeder	1	90216-
36		04434-52711	Clip	1	90216-
37		01010-81020	Bolt	1	90216-

FIG. H0210-006028 Hydraulic Pump (Drain Piping)

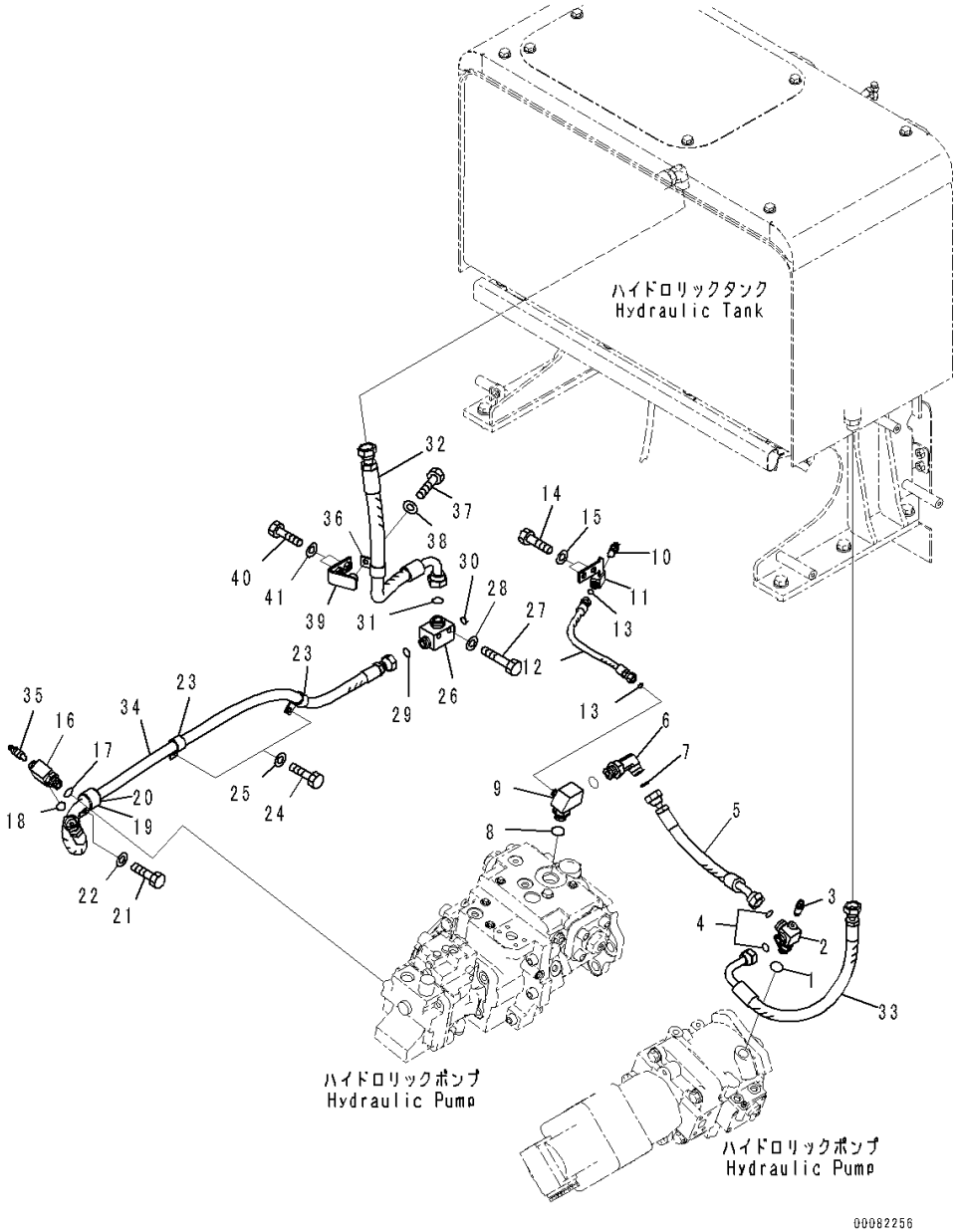

Index	Code	Part Number	Description	Qty	Serial Number
38		01643-31032	Washer	1	90216-
39		421-62-41560	Bracket	1	90216-
40		01010-81025	Bolt	2	90216-
41		01643-31032	Washer	2	90216-

FIG. H0210-006029 Hydraulic Pump (Fan Pump Piping)

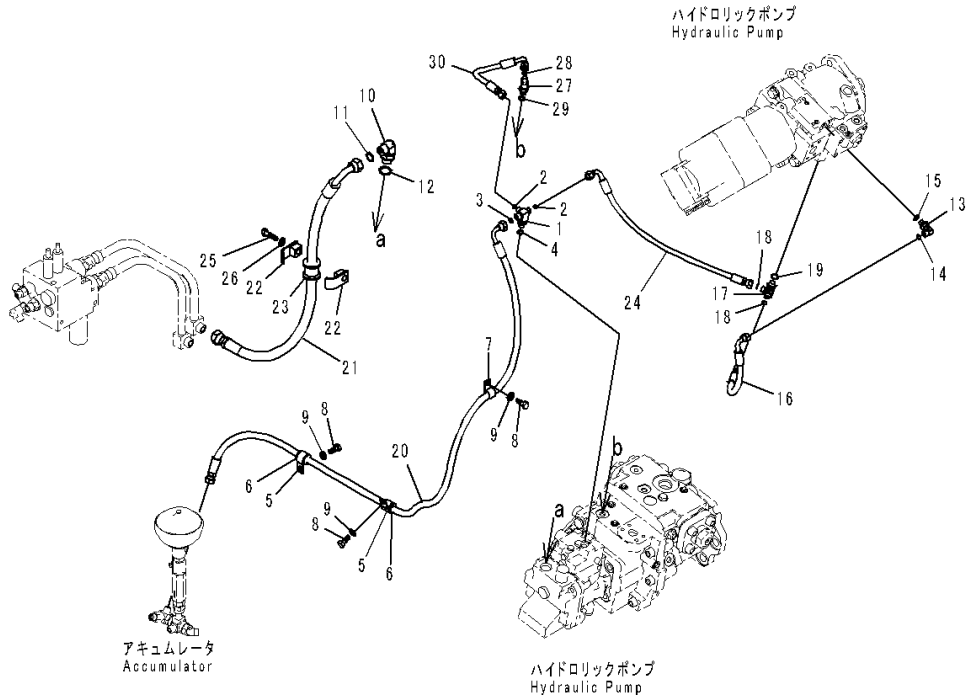

Index	Code	Part Number	Description	Qty	Serial Number
		Note: This list covers following specifications.			
		Without Emergency Steering, Automatic Control Type			
		With Emergency Steering, Automatic Control Type			
1		421-62-46720	Elbow	1	90216-
2		02896-11008	O-ring	2	90216-
3		02896-11009	O-ring	1	90216-
4		07002-11423	O-ring	1	90216-
5		04434-52110	Clip	2	90216-
6		07095-20314	Cushion	2	90216-
7		04434-51510	Clip	2	90216-
8		01010-81020	Bolt	3	90216-
9		01643-31032	Washer	3	90216-
10		02782-10522	Elbow	1	90216-
11		02896-11015	O-ring	1	90216-
12		07002-12434	O-ring	1	90216-
13		02782-10210	Elbow	1	90216-
14		02896-11008	O-ring	1	90216-
15		07002-11423	O-ring	1	90216-
16		02754-00203	Hose, Face Seal Type	1	90216-
17		421-62-46240	Tee	1	90216-
18		02896-11008	O-ring	2	90216-
19		07002-11423	O-ring	1	90216-
20		421-62-45640	Hose	1	90216-
21		421-62-45620	Hose	1	90216-
22		22P-62-13520	Clamp	2	90216-
23		07095-00524	Cushion	1	90216-
24		421-62-46620	Hose	1	90216-
25		01010-81265	Bolt	1	90216-
26		01643-31232	Washer	1	90216-
27		02782-10210	Elbow	1	90216-
28		02896-11008	O-ring	1	90216-
29		07002-11423	O-ring	1	90216-
30		02754-00203	Hose, Face Seal Type	1	90216-

FIG. H0210-005026 Hydraulic Pump (With Emergency Steering, Automatic Control Type) (Emergency Steering Motor)

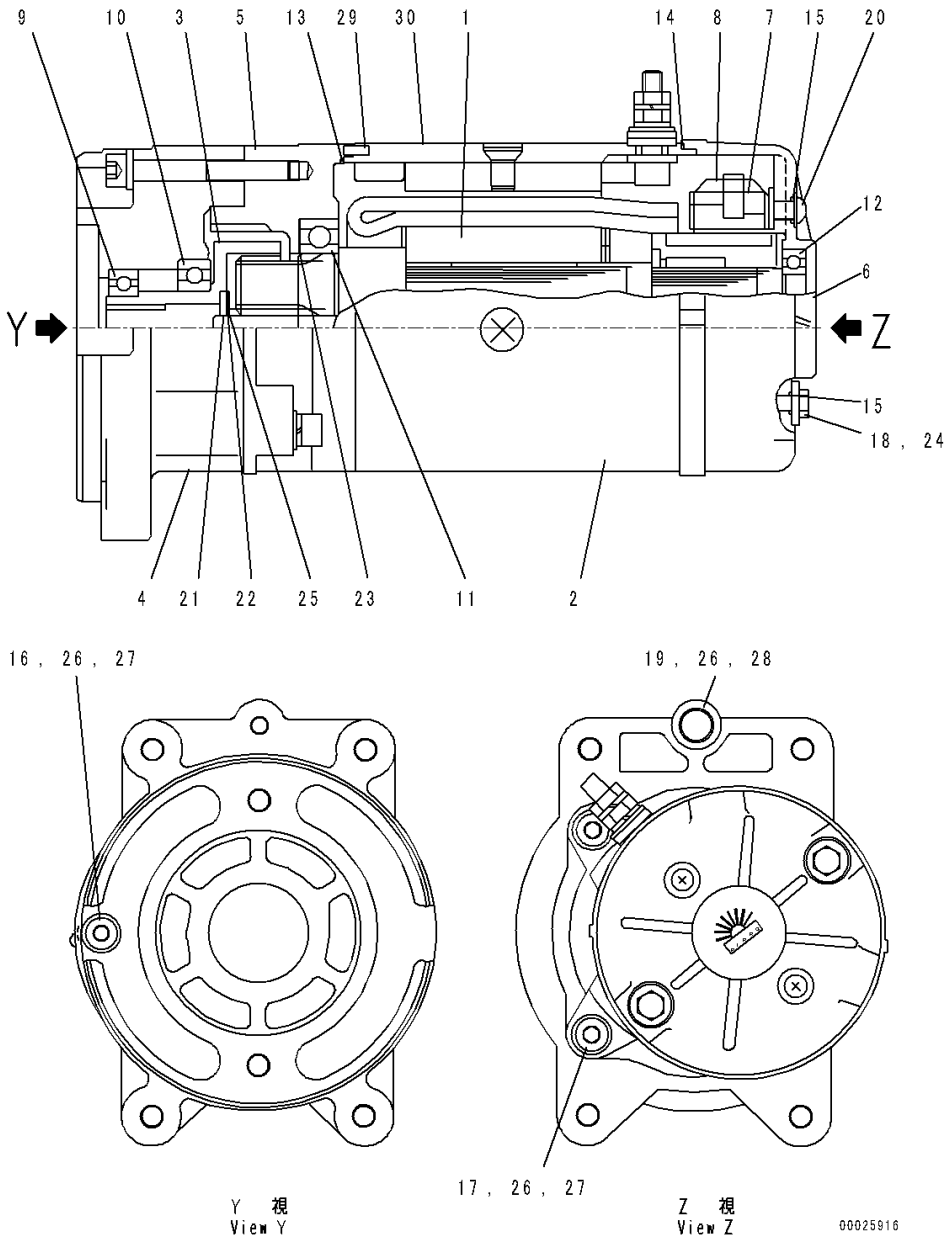

Index	Code	Part Number	Description	Qty	Serial Number
		421-62-32700	Motor Assembly	1	90216-
1		KD0-23100-0261	• Armature Assembly	1	90216-
2		KD0-51200-2820	• Yoke Assembly	1	90216-
3		KD0-51111-1340	• Shaft	1	90216-
4		KD0-51311-2030	• Bracket	1	90216-
5		KD0-23611-0720	• Bracket	1	90216-
6		KD0-23711-0424	• Bracket	1	90216-
7		KD0-23750-0490	• Holder Assembly	1	90216-
8		KD0-23740-0351	• Brush Assembly	4	90216-
9		KD1-0454-60054	• Bearing	1	90216-
10		KD1-0454-60064	• Bearing	1	90216-
11		KD1-0454-62054	• Bearing	1	90216-
12		KD1-0456-62004	• Bearing	1	90216-
13		KD1-23951-0050	• Packing	1	90216-
14		KD1-09211-1120	• O-ring	1	90216-
15		KD1-09211-0081	• O-ring	4	90216-
16		KD1-0240-08655	• Bolt	1	90216-
17		KD1-0240-08405	• Bolt	2	90216-
18		KD0-09001-4460	• Bolt	2	90216-
19		KD0-0080-08202	• Bolt	1	90216-
20		KD0-09011-3140	• Screw	2	90216-
21		KD0-51921-0430	• Washer	1	90216-
22		KD1-23921-0140	• Washer	1	90216-
23		KD0-09057-0110	• Washer	1	90216-
24		KD1-47921-0790	• Washer	2	90216-
25		KD1-23941-0040	• Washer, Insulate	1	90216-
26		KD1-0335-08002	• Washer, Spring	4	90216-
27		KD1-0330-08022	• Washer	3	90216-
28		KD1-0330-08012	• Washer	1	90216-
29		KD1-0400-30100	• Pin	1	90216-
30		KD0-09271-3760	• Plate, Name	1	90216-

FIG. H0210-005027 Hydraulic Pump (With Emergency Steering, Automatic Control Type) (Mounting) (2/2)

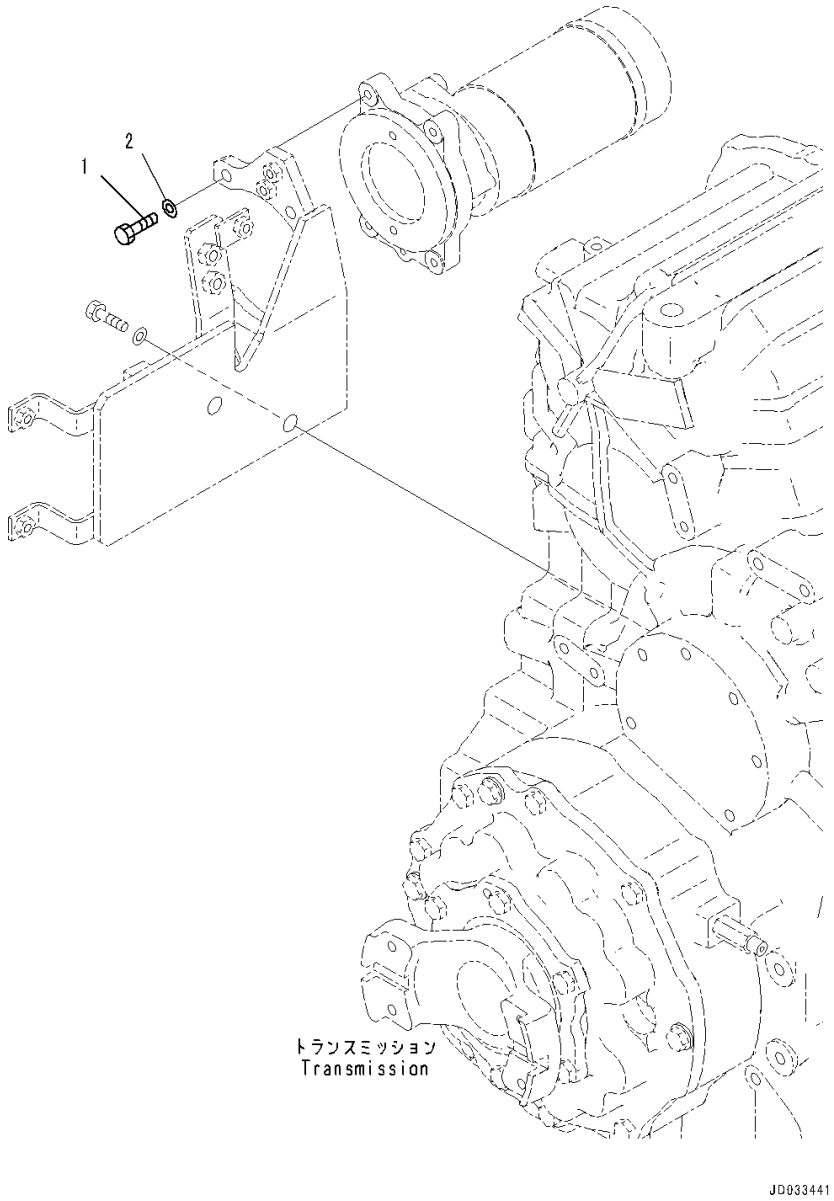

Index	Code	Part Number	Description	Qty	Serial Number
1		01010-81035	Bolt	4	90216-
2		01643-31032	Washer	4	90216-

FIG. H0210-005028 Hydraulic Pump (With Emergency Steering, Automatic Control Type) (Emergency Steering Pump)

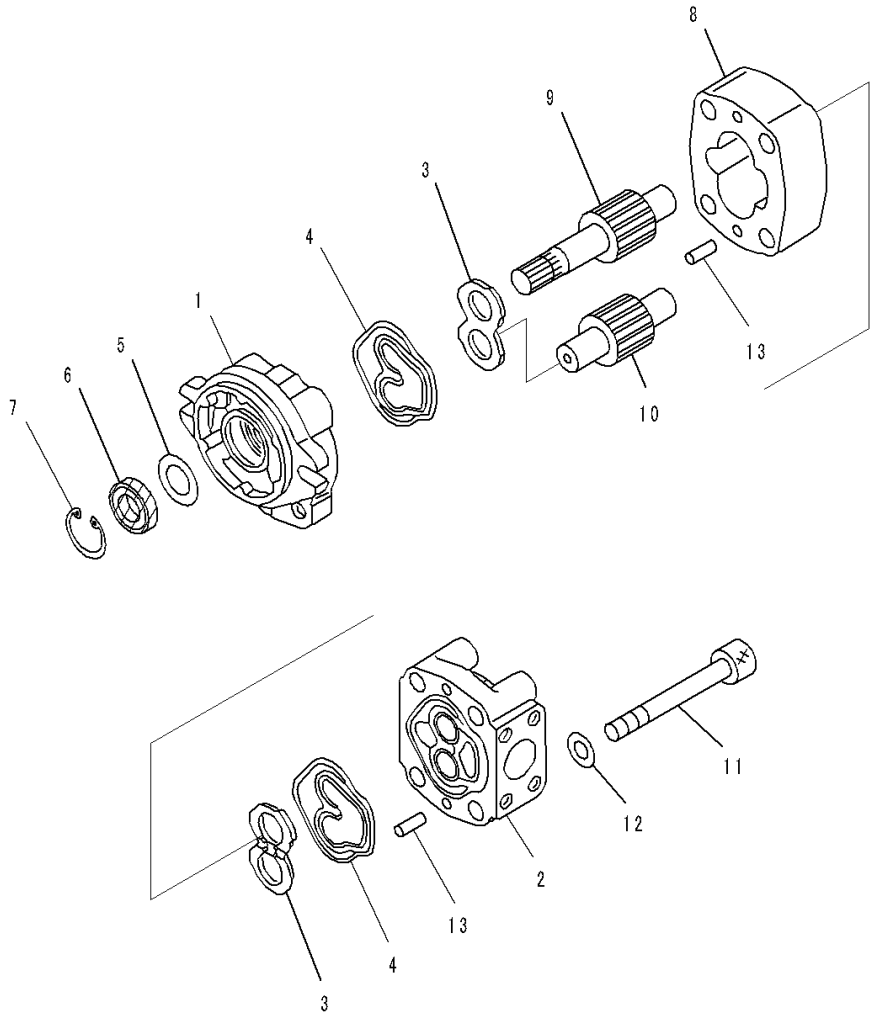

Index	Code	Part Number	Description	Qty	Serial Number
		705-40-01020	Pump Assembly, Gear (SBL 21)	1	90216-
1	C2	705-40-80230	• Bracket Assembly	1	90216-
	C2	705-41-80610	• • Bearing, Plane, Plane	1	90216-
	C2	705-41-80620	• • Bearing, Plane, Plane	1	90216-
2	C2	705-40-80131	• Cover Assembly	1	90216-
	C2	705-41-80610	• • Bearing, Plane, Plane	1	90216-
	C2	705-41-80620	• • Bearing, Plane, Plane	1	90216-
3		705-40-83720	• Plate, Side, Side	2	90216-
4		705-40-80760	• Seal	2	90216-
5		705-40-80870	• Plate	1	90216-
6		705-40-80810	• Seal, Oil	1	90216-
7		04065-03515	• Ring, Snap	1	90216-
8	C2	705-40-33011	• Gear Case	1	90216-
9	C2	705-40-33411	• Gear, Drive	1	90216-
10	C2	705-40-33511	• Gear, Driven	1	90216-
11		01253-71210	• Bolt	4	90216-
12		01643-51232	• Washer	4	90216-
13		04020-00820	• Pin, Dowel	4	90216-

FIG. H0210-005029 Hydraulic Pump (With Emergency Steering, Automatic Control Type) (Bracket)

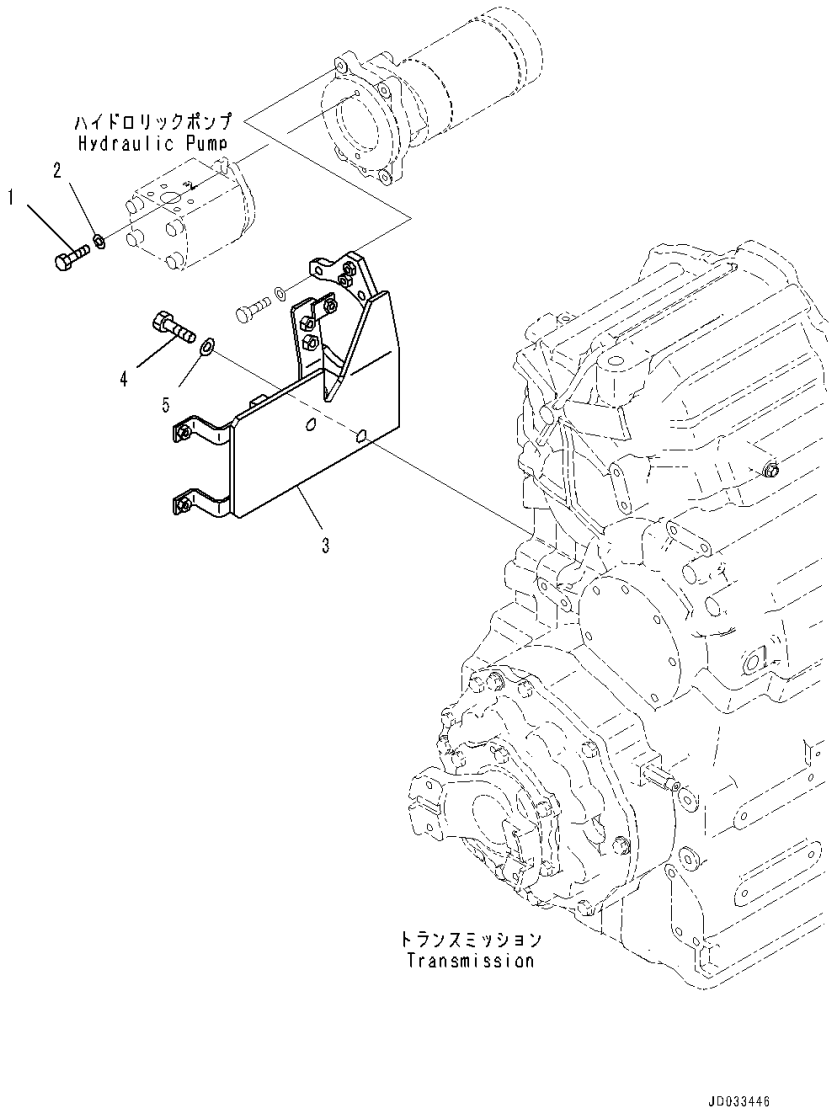

Index	Code	Part Number	Description	Qty	Serial Number
1		01010-81030	Bolt	2	90216-
2		01643-31032	Washer	2	90216-
3		421-62-45470	Bracket	1	90216-
4		01010-81635	Bolt	2	90216-
5		01643-31645	Washer	2	90216-

FIG. H0210-005030 Hydraulic Pump (With Emergency Steering, Automatic Control Type) (Tank to Emergency Steering Pump)

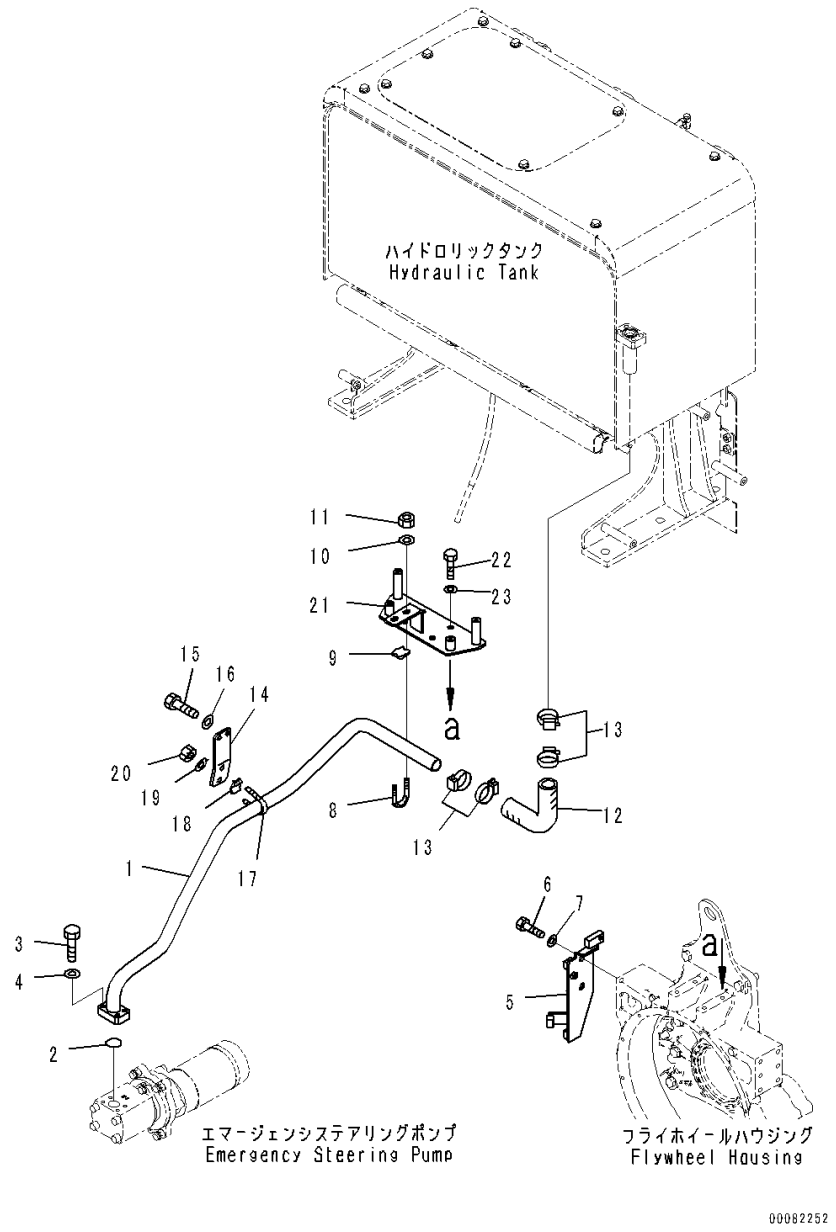

Index	Code	Part Number	Description	Qty	Serial Number
1		421-62-45480	Tube	1	90216-
2		07000-13032	O-ring	1	90216-
3		07372-21045	Bolt	4	90216-
4		01643-51032	Washer	4	90216-
5		421-62-45860	Bracket	1	90216-
6		01010-81430	Bolt	2	90216-
7		01643-31445	Washer, Flat	2	90216-
8		07283-33450	Clip	1	90216-
9		07283-53444	Seat	1	90216-
10		01643-31032	Washer	2	90216-
11		01597-01009	Nut	2	90216-
12		423-62-41460	Hose	1	90216-
13		07289-00045	Clamp	4	90216-
14		421-62-45490	Plate	1	90216-
15		01010-81025	Bolt	2	90216-
16		01643-31032	Washer	2	90216-
17		07283-33450	Clip	1	90216-
18		07283-53444	Seat	1	90216-
19		01643-31032	Washer	2	90216-
20		01597-01009	Nut	2	90216-
21		421-62-41750	Bracket	1	90216-
22		01010-81230	Bolt	4	90216-
23		01643-31232	Washer	4	90216-

FIG. H0210-005031 Hydraulic Pump (With Emergency Steering, Automatic Control Type) (Emergency Steering Pump Piping)

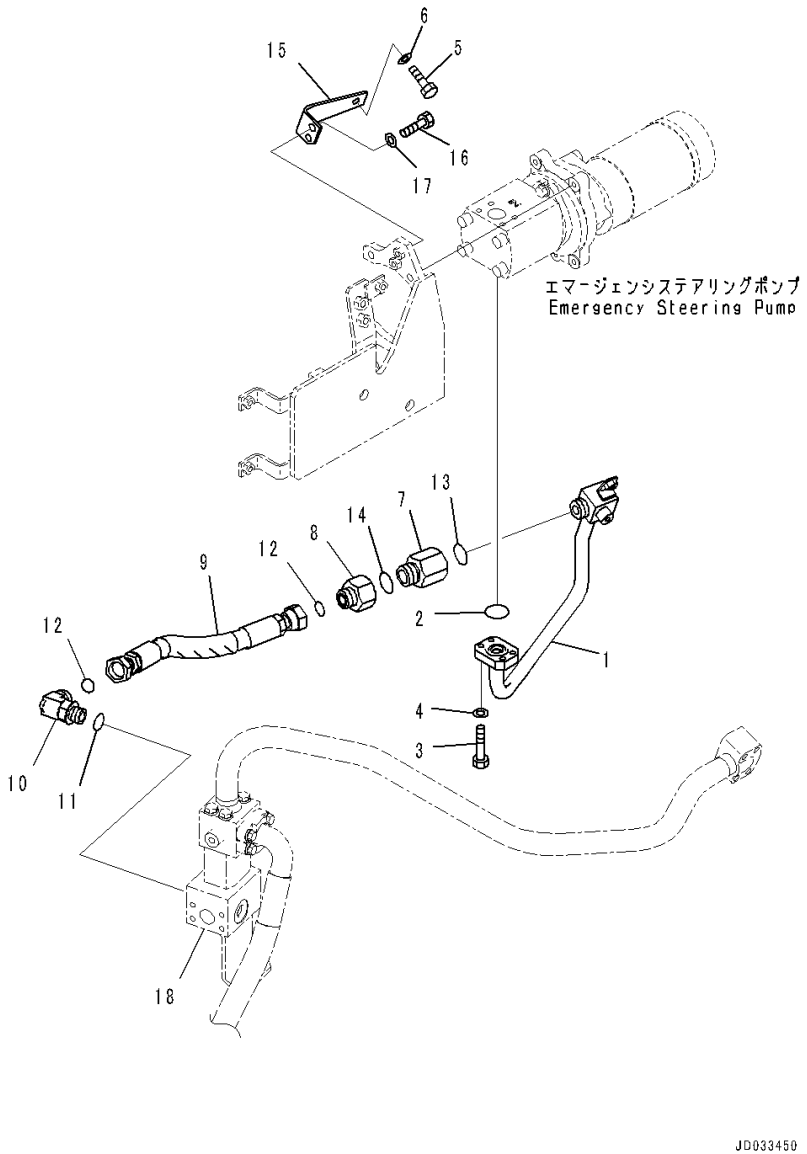

Index	Code	Part Number	Description	Qty	Serial Number
1		421-62-46411	Tube	1	90216-
2		07000-A3030	O-ring	1	90216-
3		01010-80835	Bolt	4	90216-
4		01643-30823	Washer	4	90216-
5		01010-81020	Bolt	1	90216-
6		01643-31032	Washer	1	90216-
7		421-62-32672	Valve, Check	1	90216-
8		421-62-32682	Union	1	90216-
9		421-62-45530	Hose	1	90216-
10		02782-10628	Elbow	1	90216-
11		07002-12434	O-ring	1	90216-
12		02896-11018	O-ring	2	90216-
13		07002-13034	O-ring	1	90216-
14		07002-13334	O-ring	1	90216-
15		421-62-46420	Plate	1	90216-
16		01010-81035	Bolt	2	90216-
17		01643-31032	Washer	2	90216-
18		(421-62-45320)	Block(Refer to Page 421)		-

FIG. H0210-005032 Hydraulic Pump (With Emergency Steering, Automatic Control Type) (Emergency Valve Piping)

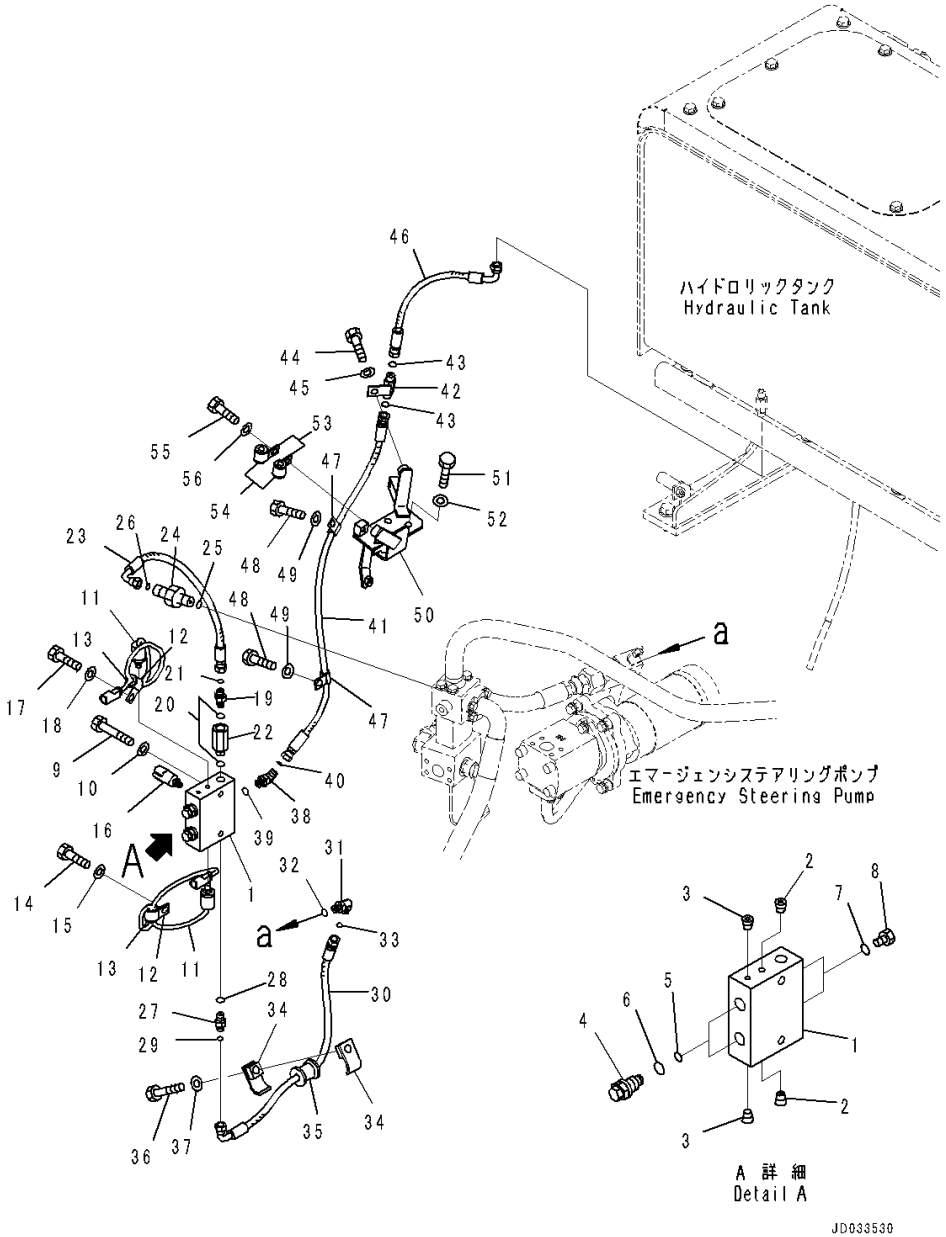

Index	Code	Part Number	Description	Qty	Serial Number
		424-62-42250	Valve	1	90216-
1		424-62-42240	• Block	1	90216-
2		708-1L-29340	• Orifice	2	90216-
3		708-21-12541	• Plug	2	90216-
4		723-60-27500	• Valve, Relief	2	90216-
5		702-16-53920	• • O-ring	1	90216-
6		07002-11623	• • O-ring	1	90216-
7		07002-11023	• O-ring	2	90216-
8		07040-11007	• Plug	2	90216-
9		01010-81060	Bolt	2	90216-
10		01643-31032	Washer	2	90216-
11		421-06-44310	Switch, Pressure	2	91112-
12		04434-51710	Clip	2	90216-
13		07095-20211	Cushion	2	90216-
14		01010-81025	Bolt	1	90216-
15		01643-31032	Washer	1	90216-
16		206-06-61130	Switch, Pressure	1	90216-
17		01010-81025	Bolt	1	90216-
18		01643-31032	Washer	1	90216-
19		423-62-44310	Nipple	1	90216-
20		07002-12034	O-ring	2	90216-
21		02896-11008	O-ring	1	90216-
22		421-62-44910	Adapter	1	90216-
23		02757-002A4	Hose, Face Seal Type	1	90216-
24		20Y-62-41971	Nipple	1	90216-
25		07002-11423	O-ring	1	90216-
26		02896-11008	O-ring	1	90216-
27		423-62-44310	Nipple	1	90216-
28		07002-12034	O-ring	1	90216-
29		02896-11008	O-ring	1	90216-
30		02757-00206	Hose, Face Seal Type	1	90216-
31		424-62-44520	Elbow	1	90216-
32		07002-11423	O-ring	1	90216-
33		02896-11008	O-ring	1	90216-
34		22P-62-13510	Clamp	2	90216-
35		07095-00314	Cushion	1	90216-
36		01010-81265	Bolt	1	90216-
37		01643-31232	Washer	1	90216-
38		02783-10210	Elbow	1	90216-

FIG. H0210-005032 Hydraulic Pump (With Emergency Steering, Automatic Control Type) (Emergency Valve Piping)

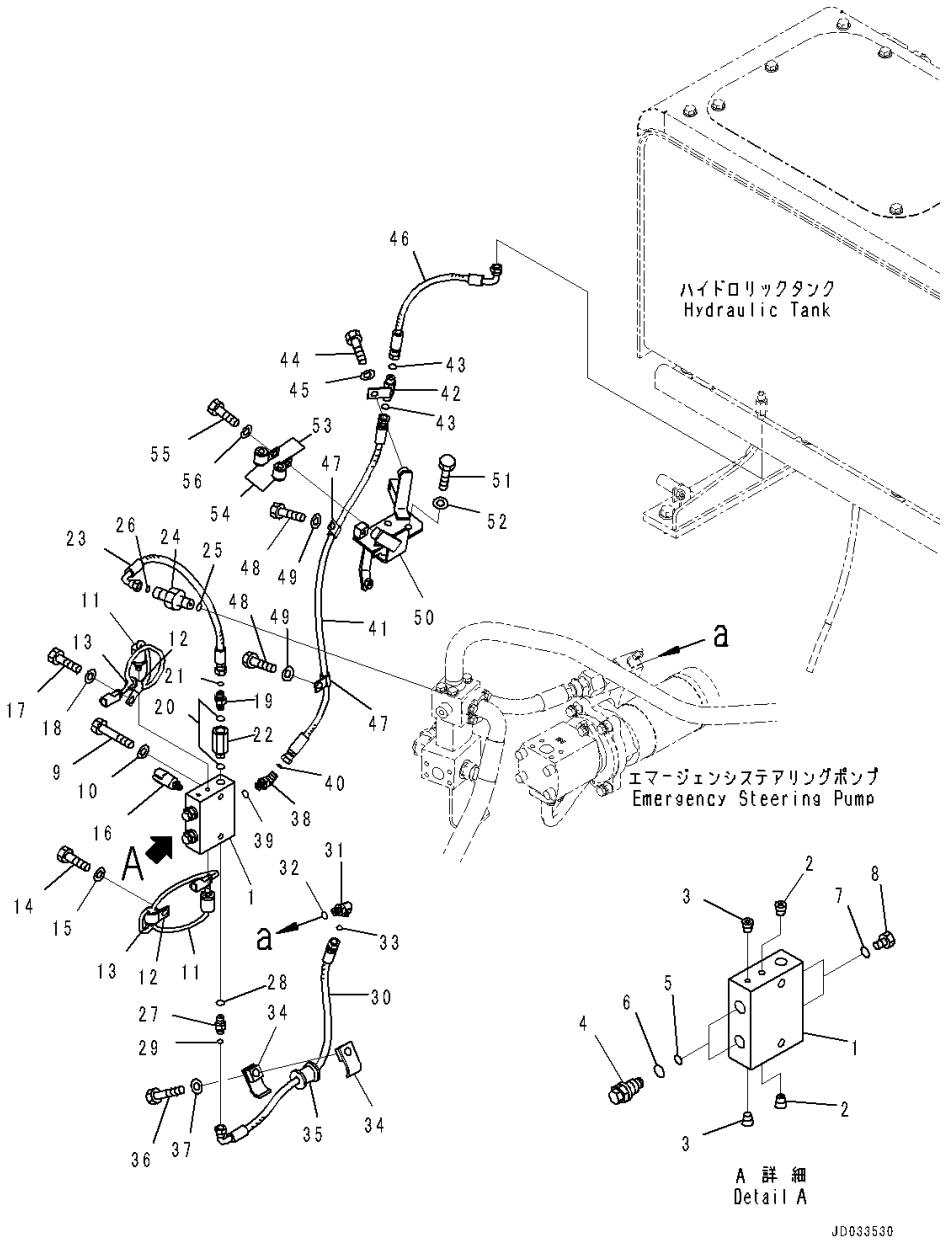

Index	Code	Part Number	Description	Qty	Serial Number
39		07002-11423	O-ring	1	90216-
40		02896-11008	O-ring	1	90216-
41		421-62-45550	Hose	1	90216-
42		418-43-37161	Joint	1	90216-
43		02896-11008	O-ring	2	90216-
44		01010-81020	Bolt	1	90216-
45		01643-31032	Washer	1	90216-
46		421-62-46740	Hose	1	90216-
47		04434-51210	Clip	2	90216-
48		01010-81025	Bolt	2	90216-
49		01643-31032	Washer	2	90216-
50		421-62-45430	Bracket	1	90216-
51		01010-81025	Bolt	2	90216-
52		01643-31032	Washer	2	90216-
53		04434-51710	Clip	2	90216-
54		07095-20211	Cushion	2	90216-
55		01010-81025	Bolt	1	90216-
56		01643-31032	Washer	1	90216-

FIG. H2260-002001 Cooling Fan Drive Piping (Without Brake Oil Cooling System)

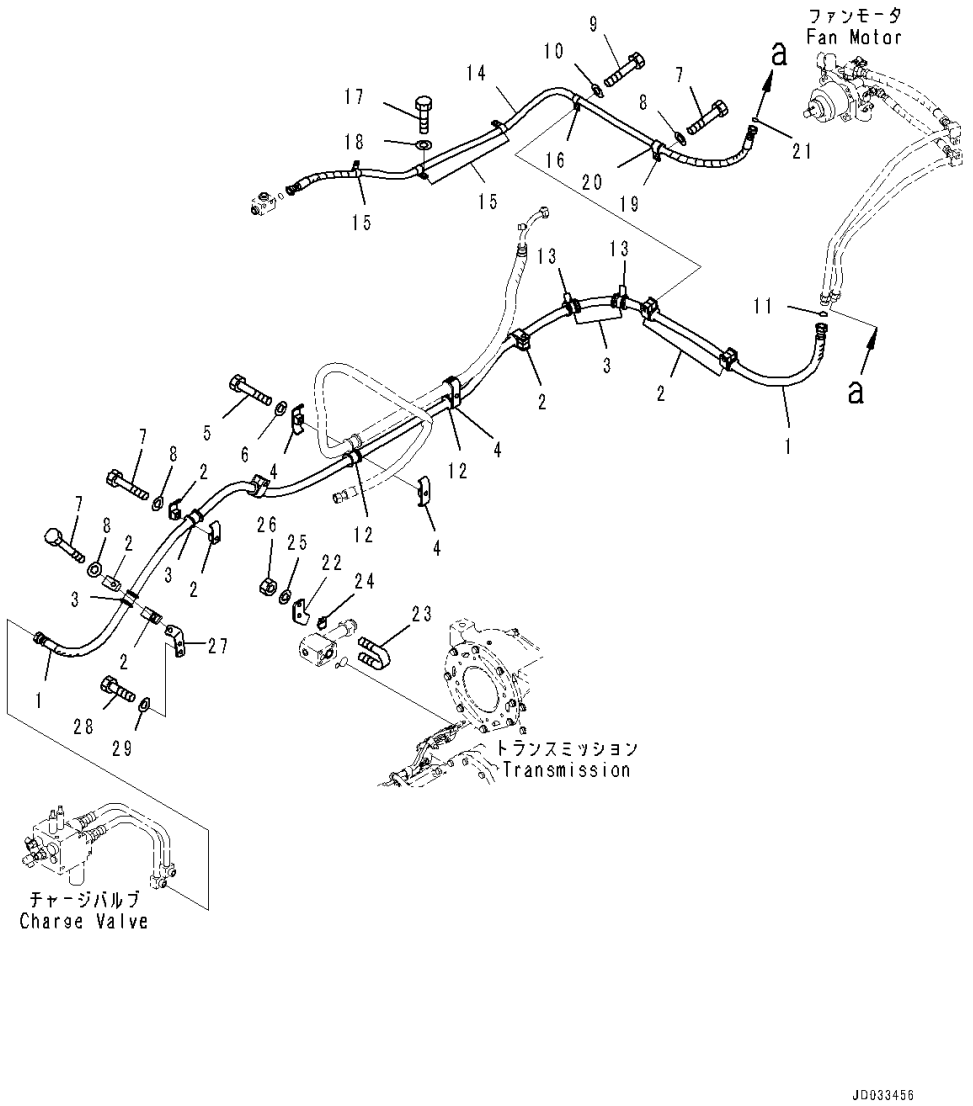

Index	Code	Part Number	Description	Qty	Serial Number
1		421-62-45810	Hose	1	90216-
2		22P-62-13520	Clamp	12	90216-
3		07095-00524	Cushion	10	90216-
4		22P-62-13550	Clamp	4	90216-
5		01010-81065	Bolt	2	90216-
6		01643-31032	Washer	2	90216-
7		01010-81265	Bolt	5	90216-
8		01643-31232	Washer	5	90216-
9		01010-81270	Bolt	1	90216-
10		01643-31232	Washer	1	90216-
11		02896-11015	O-ring	1	90216-
12		07095-00524	Cushion	2	90216-
13		08034-20823	Band	4	90216-
14		421-62-41520	Hose	1	90216-
15		04434-51910	Clip	3	90216-
16		04434-51912	Clip	1	90216-
17		01010-81020	Bolt	3	90216-
18		01643-31032	Washer	3	90216-
19		04434-52712	Clip	1	90216-
20		07095-20419	Cushion	1	90216-
21		02896-11012	O-ring	1	90216-
22		421-62-45680	Plate	1	90216-
23		07283-33450	Clip	1	90216-
24		07283-53444	Seat	1	90216-
25		01643-31032	Washer	2	90216-
26		01597-01009	Nut	2	90216-
27		421-62-45690	Bracket	1	90216-
28		01010-81230	Bolt	2	90216-
29		01643-31232	Washer	2	90216-

FIG. H2260-003001 Cooling Fan Drive Piping (With Brake Oil Cooling System)

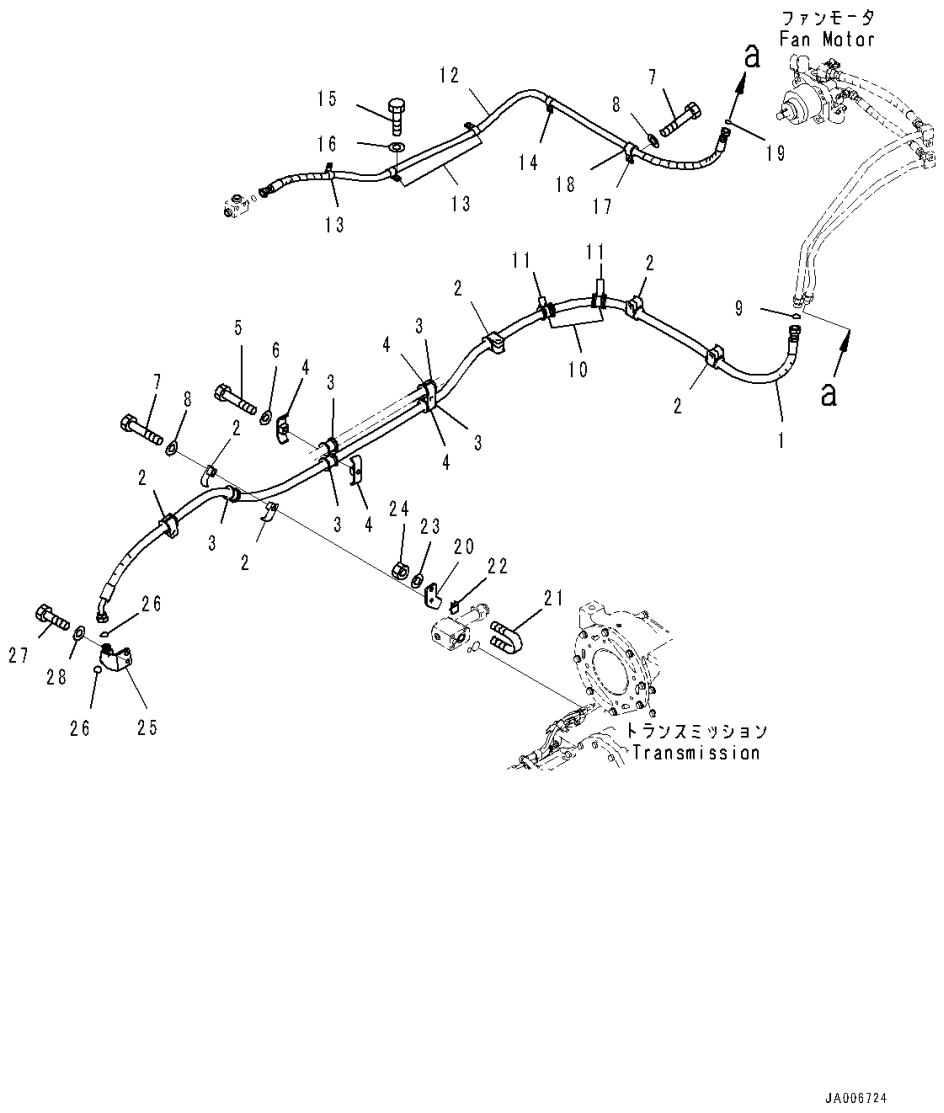

Index	Code	Part Number	Description	Qty	Serial Number
1		421-U44-4910	Hose	1	90216-
2		22P-62-13520	Clamp	10	90216-
3		07095-00524	Cushion	9	90216-
4		22P-62-13550	Clamp	4	90216-
5		01010-81065	Bolt	2	90216-
6		01643-31032	Washer	2	90216-
7		01010-81265	Bolt	5	90216-
8		01643-31232	Washer	5	90216-
9		02896-11015	O-ring	1	90216-
10		07095-00524	Cushion	2	90216-
11		08034-20823	Band	4	90216-
12		421-62-41520	Hose	1	90216-
13		04434-51910	Clip	3	90216-
14		04434-51912	Clip	1	90216-
15		01010-81020	Bolt	3	90216-
16		01643-31032	Washer	3	90216-
17		04434-52712	Clip	1	90216-
18		07095-20419	Cushion	1	90216-
19		02896-11012	O-ring	1	90216-
20		421-62-45680	Plate	1	90216-
21		07283-33450	Clip	1	90216-
22		07283-53444	Seat	1	90216-
23		01643-31032	Washer	2	90216-
24		01597-01009	Nut	2	90216-
25		421-U45-4260	Bracket	1	90216-
26		02896-21015	O-ring	2	90216-
27		01010-81230	Bolt	2	90216-
28		01643-31232	Washer	2	90216-

FIG. H4200-012001 Hydraulic Piping (Steering Piping)

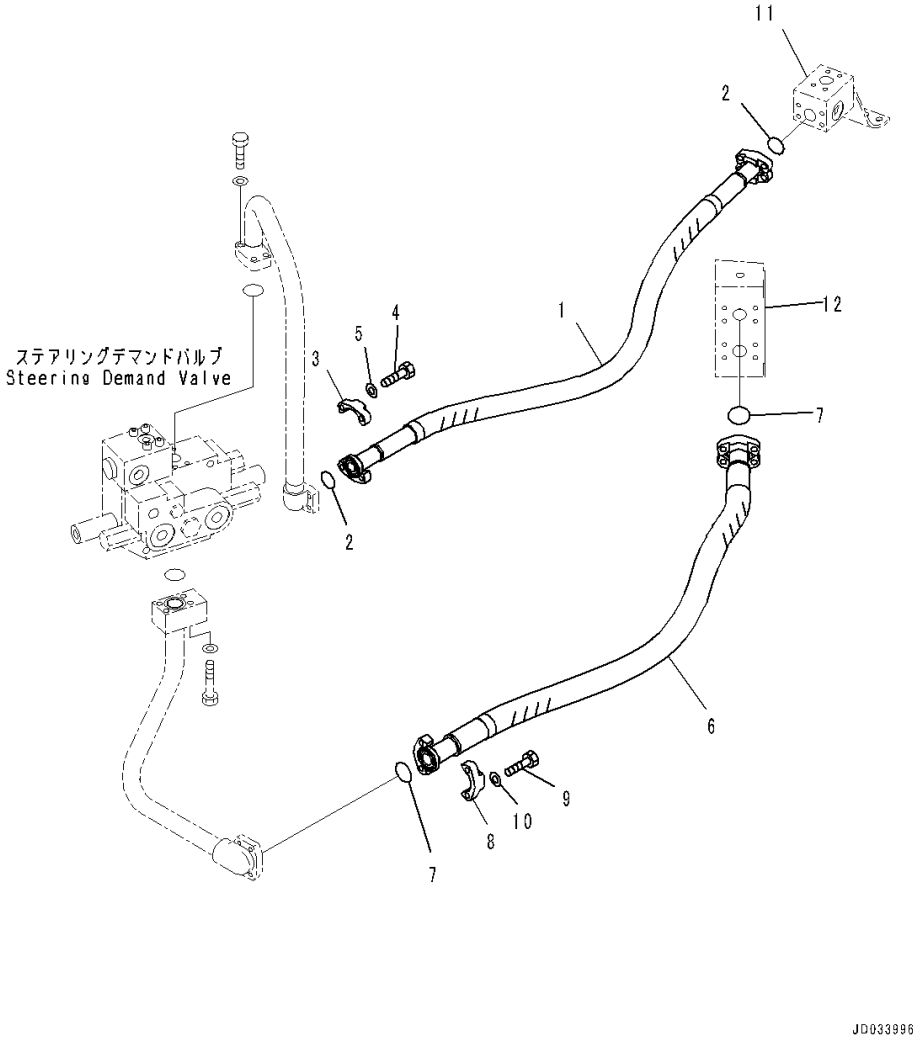

Index	Code	Part Number	Description	Qty	Serial Number
		Note: This list covers following specifications.			
		With 2-Spool Control Valve			
		With 2-Spool Control Valve, ECSS			
		With 2-Spool Control Valve, Brake Oil Cooling System			
		With 2-Spool Control Valve, ECSS, Brake Oil Cooling System			
		With 3-Spool Control Valve			
		With 3-Spool Control Valve, ECSS			
1		421-62-43330	Hose	1	90216-
2		07000-13032	O-ring	2	90216-
3		07371-31049	Flange, Split	4	90216-
4		07372-21035	Bolt	8	90216-
5		01643-51032	Washer	8	90216-
6		421-62-43340	Hose	1	90216-
7		07000-13038	O-ring	2	90216-
8		07371-31255	Flange, Split	4	90216-
9		07372-21035	Bolt	8	90216-
10		01643-51032	Washer	8	90216-
11		(421-62-45320)	Block(Refer to Page 421)		-
12		(421-62-45210)	Block(Refer to Page 451)		-

FIG. H4200-012002 Hydraulic Piping (Control Valve to Hydraulic Tank)

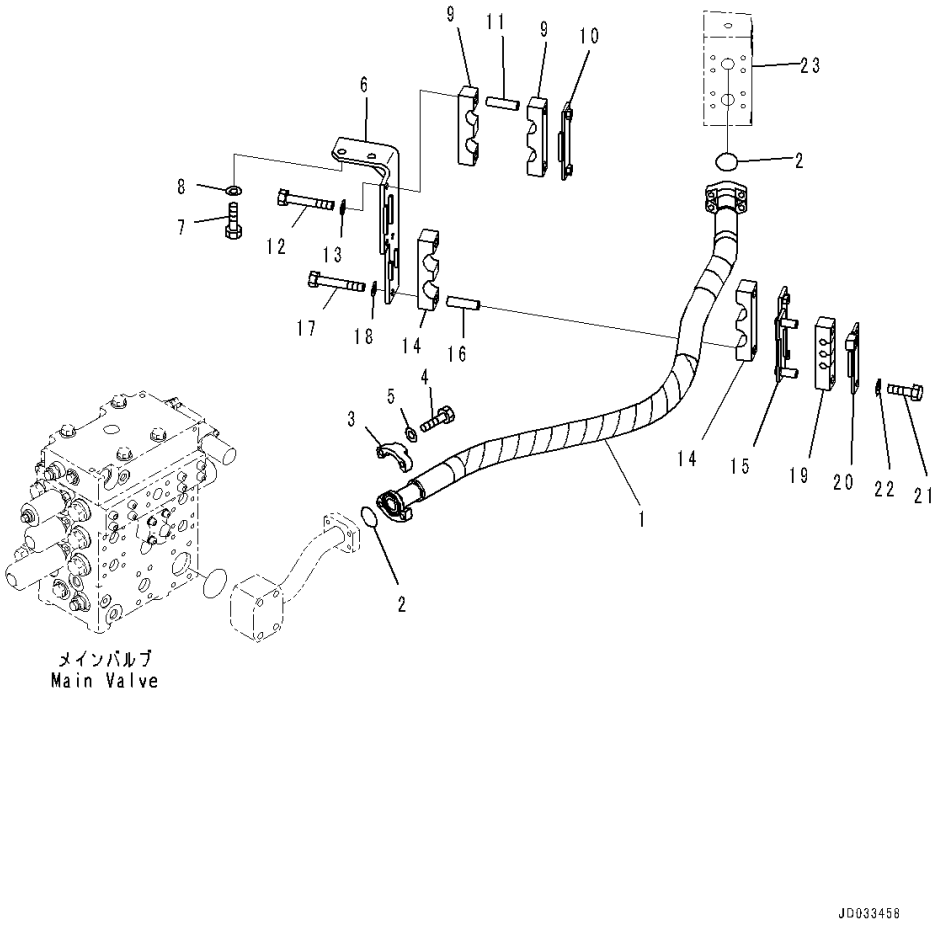

Index	Code	Part Number	Description	Qty	Serial Number
		Note: This list covers following specifications.			
		With 2-Spool Control Valve			
		With 2-Spool Control Valve, ECSS			
		With 2-Spool Control Valve, Brake Oil Cooling System			
		With 2-Spool Control Valve, ECSS, Brake Oil Cooling System			
		With 3-Spool Control Valve			
		With 3-Spool Control Valve, ECSS			
1		421-62-43320	Hose	1	90216-
2		07000-13038	O-ring	2	90216-
3		07371-31255	Flange, Split	4	90216-
4		07372-21035	Bolt	8	90216-
5		01643-51032	Washer	8	90216-
6		421-62-46371	Bracket	1	90216-
7		01010-81230	Bolt	2	90216-
8		01643-31232	Washer	2	90216-
9		421-62-44250	Clamp	2	90216-
10		421-62-46320	Plate	1	90216-
11		417-62-23690	Spacer	2	90216-
12		01010-81095	Bolt	2	90216-
13		01643-31032	Washer	2	90216-
14		421-62-44240	Clamp	2	90216-
15		421-62-46310	Bracket	1	90216-
16		417-62-23690	Spacer	2	90216-
17		01010-81090	Bolt	2	90216-
18		01643-31032	Washer	2	90216-
19		423-62-34981	Rubber	1	90216-
20		421-62-46380	Plate	1	90216-
21		01010-81025	Bolt	2	90216-
22		01643-31032	Washer	2	90216-
23		(421-62-45210)	Block(Refer to Page 451)		-

FIG. H4200-012003 Hydraulic Piping (Delivery Piping)

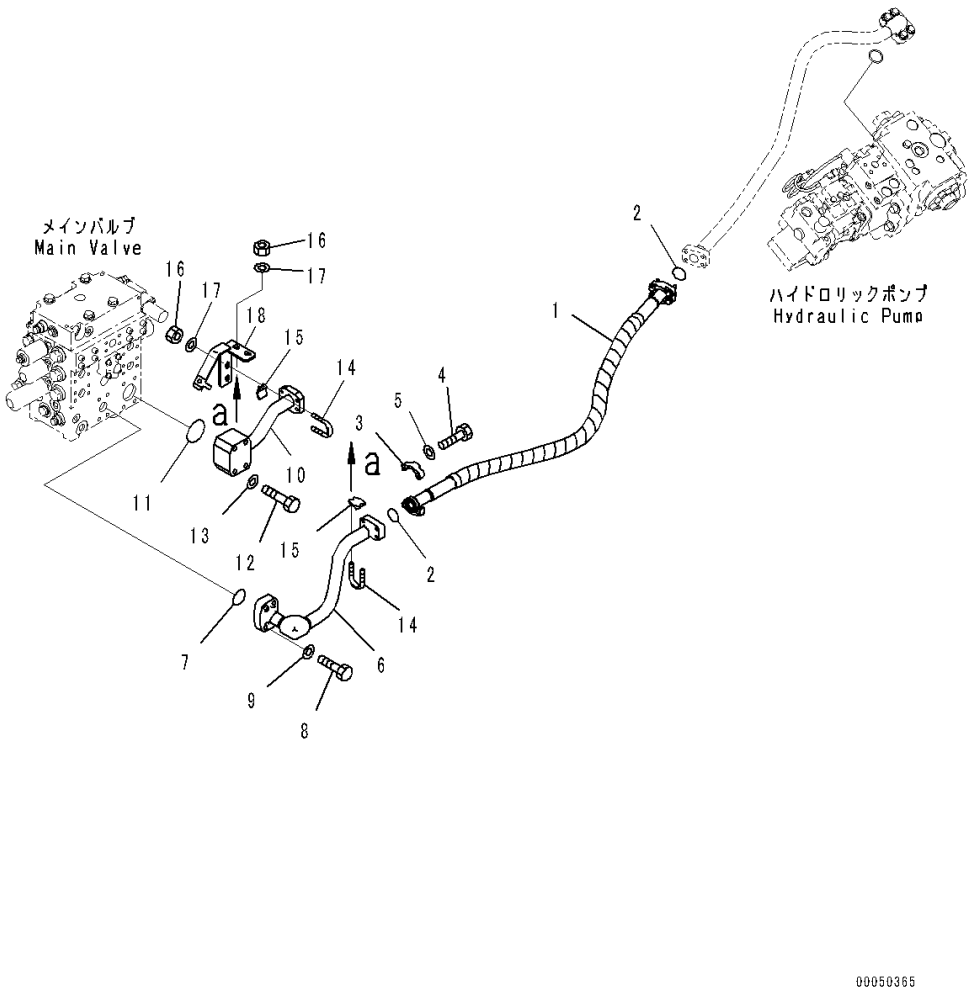

Index	Code	Part Number	Description	Qty	Serial Number
		Note: This list covers following specifications.			
		With 2-Spool Control Valve			
		With 2-Spool Control Valve, ECSS			
		With 2-Spool Control Valve, Brake Oil Cooling System			
		With 2-Spool Control Valve, ECSS, Brake Oil Cooling System			
		With 3-Spool Control Valve			
		With 3-Spool Control Valve, ECSS			
1		421-62-43310	Hose	1	90216-
2		07000-13032	O-ring	2	90216-
3		07371-31049	Flange, Split	4	90216-
4		07372-21035	Bolt	8	90216-
5		01643-51032	Washer	8	90216-
6		421-62-43110	Tube	1	90216-
7		07000-13038	O-ring	1	90216-
8		01010-81250	Bolt	4	90216-
9		01643-31232	Washer	4	90216-
10		421-62-43120	Tube	1	90216-
11		07000-12060	O-ring	1	90216-
12		01010-81285	Bolt	4	90216-
13		01643-31232	Washer	4	90216-
14		07283-33450	Clip	2	90216-
15		07283-53444	Seat	2	90216-
16		01597-01009	Nut	4	90216-
17		01643-31032	Washer	4	90216-
18		421-62-43290	Bracket	1	90216-

FIG. H4200-012004 Hydraulic Piping (PPC Piping)

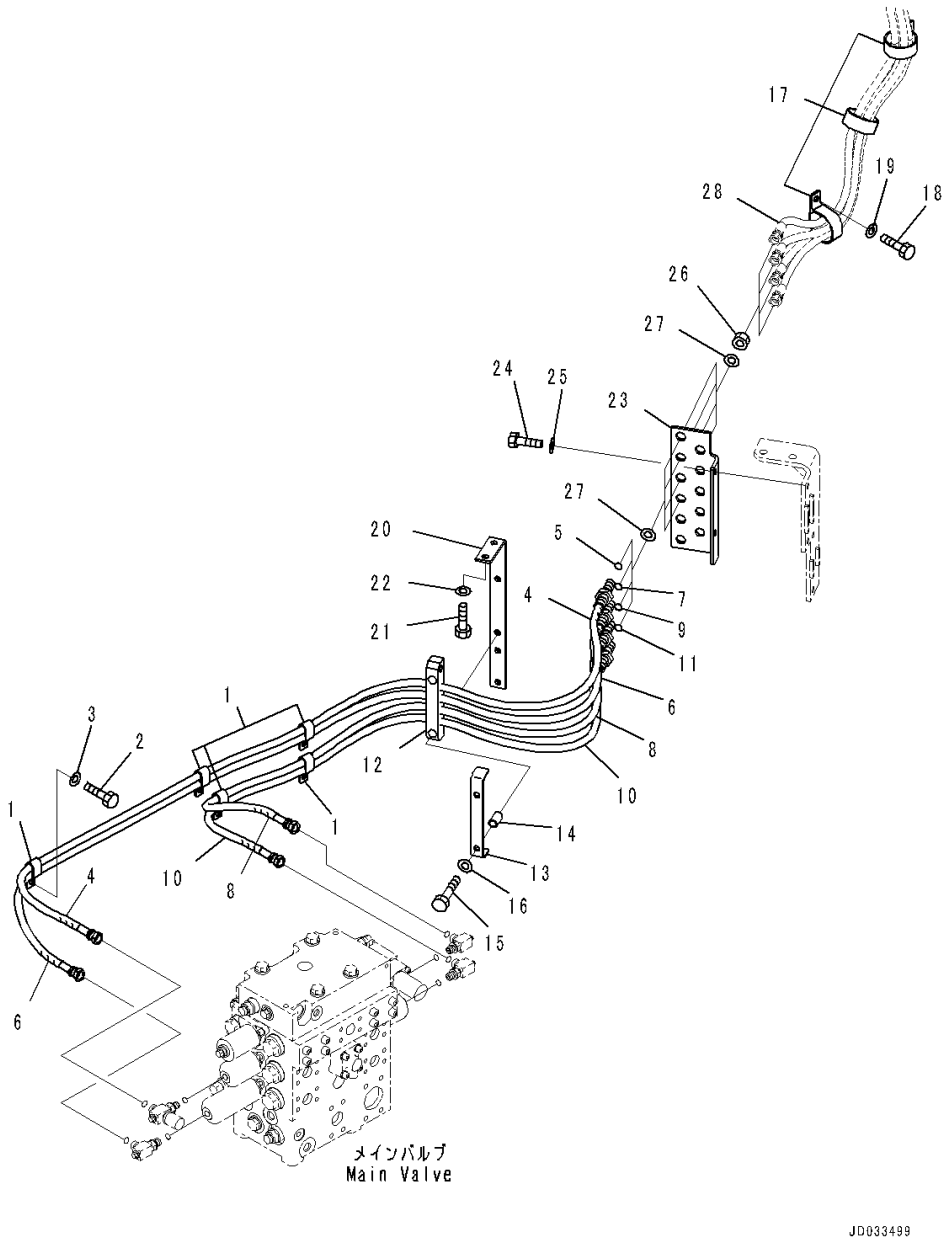

Index	Code	Part Number	Description	Qty	Serial Number
		Note: This list covers following specifications.			
		With 2-Spool Control Valve			
		With 2-Spool Control Valve, ECSS			
		With 2-Spool Control Valve, Brake Oil Cooling System			
		With 2-Spool Control Valve, ECSS, Brake Oil Cooling System			
1		04435-51610	Clip	5	90216-
2		01010-81020	Bolt	5	90216-
3		01643-31032	Washer	5	90216-
4		421-62-43350	Hose, Blue	1	90216-
		21U-62-34750	• Band, Blue	2	90216-
5		02896-11009	• O-ring	1	90216-
6		421-62-43360	Hose, Yellow	1	90216-
		21U-62-34710	• Band, Yellow	2	90216-
7		02896-11009	• O-ring	1	90216-
8		421-62-43370	Hose, Green	1	90216-
		21U-62-34730	• Band, Green	2	90216-
9		02896-11009	• O-ring	1	90216-
10		421-62-43380	Hose, White	1	90216-
		21U-62-34770	• Band, White	2	90216-
11		02896-11009	• O-ring	1	90216-
12		419-62-23990	Rubber	1	90216-
13		421-62-46460	Plate	1	90216-
14		419-43-17910	Spacer	2	90216-
15		01010-81060	Bolt	2	90216-
16		01643-31032	Washer	2	90216-
17		21K-03-11190	Clip	3	90216-
18		01010-81020	Bolt	3	90216-
19		01643-31032	Washer	3	90216-
20		421-62-44260	Bracket	1	90216-
21		01010-81025	Bolt	2	90216-
22		01643-31032	Washer	2	90216-
23		421-62-46510	Plate	1	90216-
24		01010-81025	Bolt	2	90216-
25		01643-31032	Washer	2	90216-
26		426-62-35620	Nut	4	90216-
27		01643-31845	Washer	8	90216-
28		(421-43-48150)	Hose(Refer to Page 646)		-
		(421-43-48150)	Hose(Refer to Page 652)		-
		(421-43-48150)	Hose(Refer to Page 661)		-

FIG. H4200-012004 Hydraulic Piping (PPC Piping)

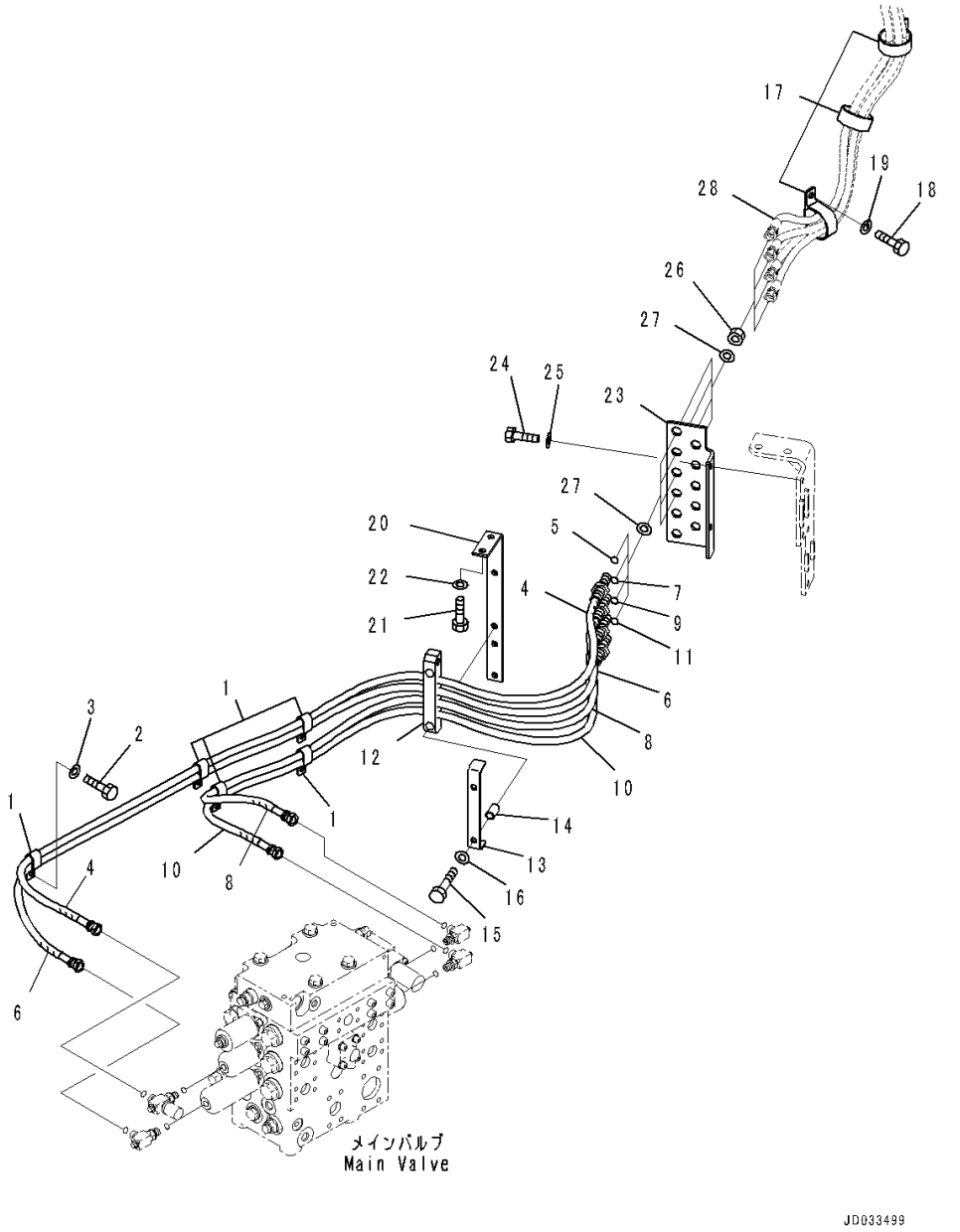

Index	Code	Part Number	Description	Qty	Serial Number
		(421-43-48150)	Hose(Refer to Page 669)		-

FIG. H4200-012005 Hydraulic Piping (Bucket Cylinder Piping)

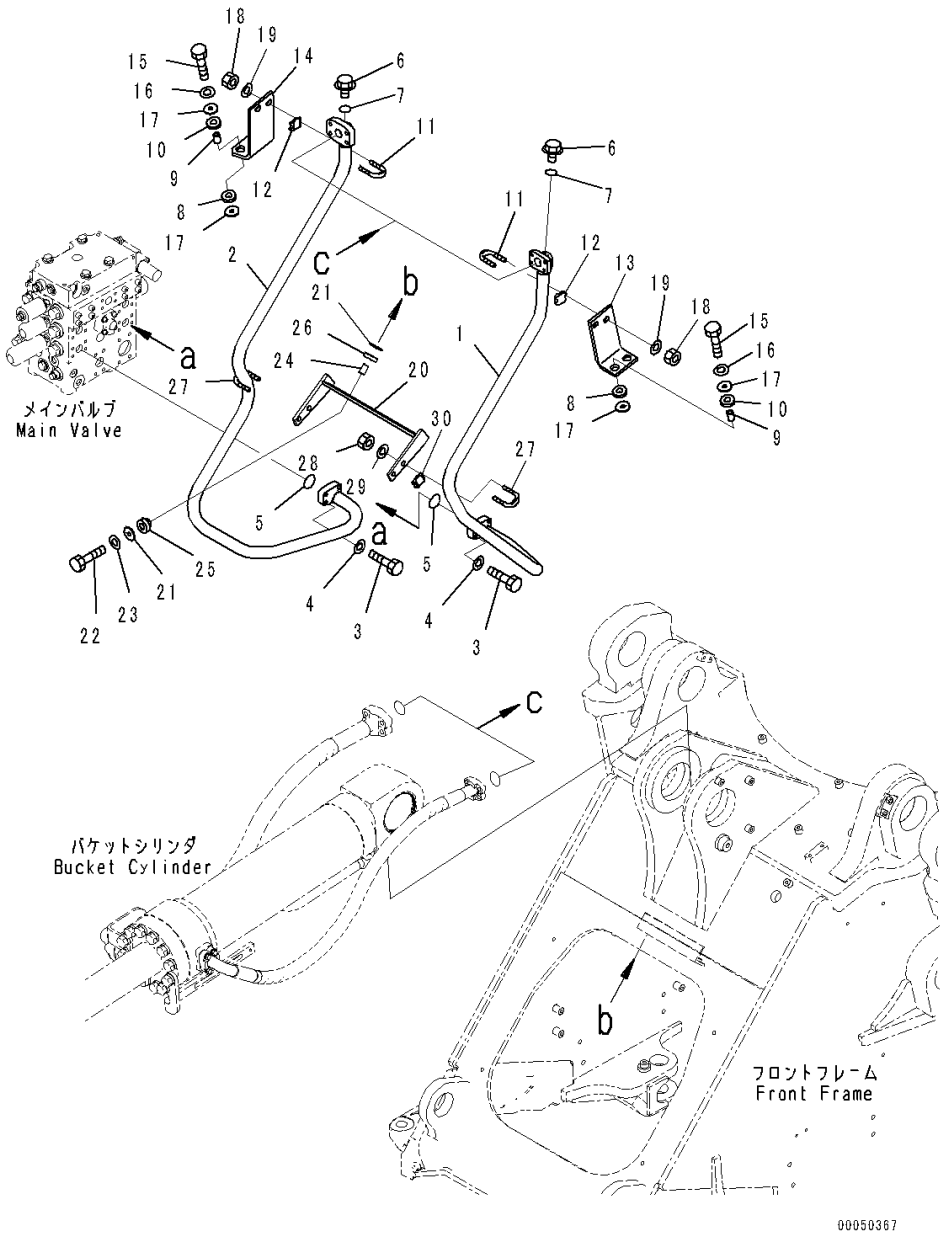

Index	Code	Part Number	Description	Qty	Serial Number
		Note: This list covers following specifications.			
		With 2-Spool Control Valve			
		With 2-Spool Control Valve, ECSS			
		With 2-Spool Control Valve, Brake Oil Cooling System			
		With 2-Spool Control Valve, ECSS, Brake Oil Cooling System			
1		421-62-43212	Tube	1	90216-
2		421-62-43222	Tube	1	90216-
3		07372-21040	Bolt	8	90216-
4		01643-51032	Washer	8	90216-
5		07000-13035	O-ring	2	90216-
6		708-8E-16150	Plug	2	90216-
7		07002-11023	O-ring	2	90216-
8		415-64-13130	Cushion	4	90216-
9		421-62-18560	Spacer	4	90216-
10		419-43-17930	Cushion	4	90216-
11		07283-33450	Clip	2	90216-
12		07283-53444	Seat	2	90216-
13		421-62-43630	Plate	1	90216-
14		421-62-43640	Plate	1	90216-
15		01010-81050	Bolt	4	90216-
16		01643-31032	Washer	4	90216-
17		415-64-13120	Washer	8	90216-
18		01597-01009	Nut	4	90216-
19		203-54-56970	Washer	4	90216-
20		421-62-43280	Bracket	1	90216-
21		415-64-13120	Washer	4	90216-
22		01010-81060	Bolt	2	90216-
23		01643-31032	Washer	2	90216-
24		421-62-18560	Spacer	2	90216-
25		419-43-17930	Cushion	2	90216-
26		415-64-13130	Cushion	2	90216-
27		07283-33450	Clip	2	90216-
28		01597-01009	Nut	4	90216-
29		01643-31032	Washer	4	90216-
30		07283-53444	Seat	2	90216-

FIG. H4200-012006 Hydraulic Piping (Lift Cylinder Piping)

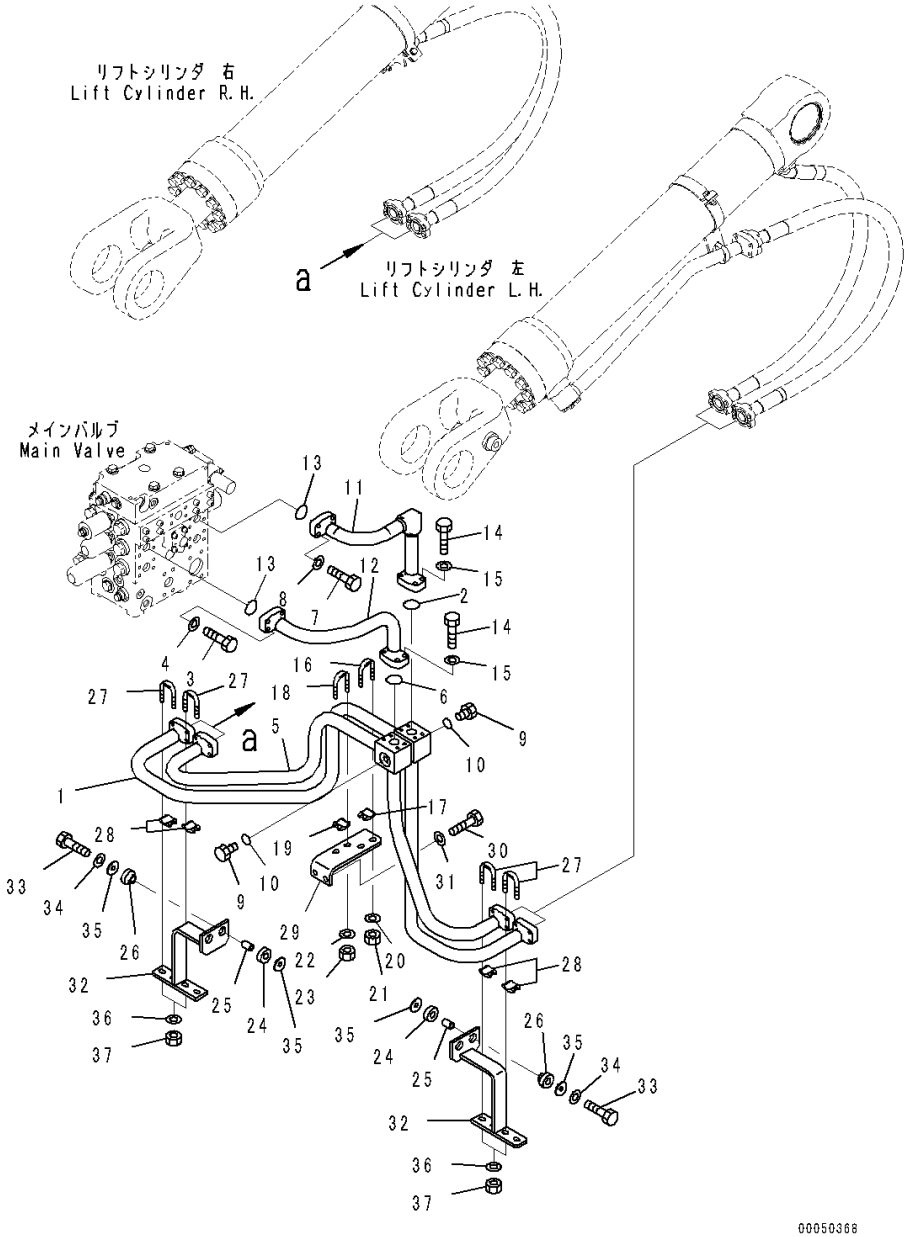

Index	Code	Part Number	Description	Qty	Serial Number
		Note: This list covers following specifications.			
		With 2-Spool Control Valve			
		With 2-Spool Control Valve, ECSS			
		With 2-Spool Control Valve, Brake Oil Cooling System			
		With 2-Spool Control Valve, ECSS, Brake Oil Cooling System			
		With 3-Spool Control Valve			
		With 3-Spool Control Valve, ECSS			
1		421-62-43243	Tube	1	90216-
2		07000-13035	O-ring	1	90216-
3		07372-21040	Bolt	4	90216-
4		01643-51032	Washer	4	90216-
5		421-62-43252	Tube	1	90216-
6		07000-13035	O-ring	1	90216-
7		07372-21040	Bolt	4	90216-
8		01643-51032	Washer	4	90216-
9		720-68-19530	Plug	2	90216-
10		07002-11823	O-ring	2	90216-
11		421-62-43140	Tube	1	90216-
12		421-62-43150	Tube	1	90216-
13		07000-13035	O-ring	2	90216-
14		07372-21040	Bolt	8	90216-
15		01643-51032	Washer	8	90216-
16		07283-33450	Clip	1	90216-
17		07283-53444	Seat	1	90216-
18		07283-33450	Clip	1	90216-
19		07283-53444	Seat	1	90216-
20		01643-31032	Washer	2	90216-
21		01597-01009	Nut	2	90216-
22		01643-31032	Washer	2	90216-
23		01597-01009	Nut	2	90216-
24		415-64-13130	Cushion	4	90216-
25		421-62-18560	Spacer	4	90216-
26		419-43-17930	Cushion	4	90216-
27		07283-33450	Clip	4	90216-
28		07283-53444	Seat	4	90216-
29		421-62-43270	Bracket	1	90216-
30		01010-81035	Bolt	2	90216-
31		01643-31032	Washer	2	90216-
32		421-62-43261	Bracket	2	90216-

FIG. H4200-012006 Hydraulic Piping (Lift Cylinder Piping)

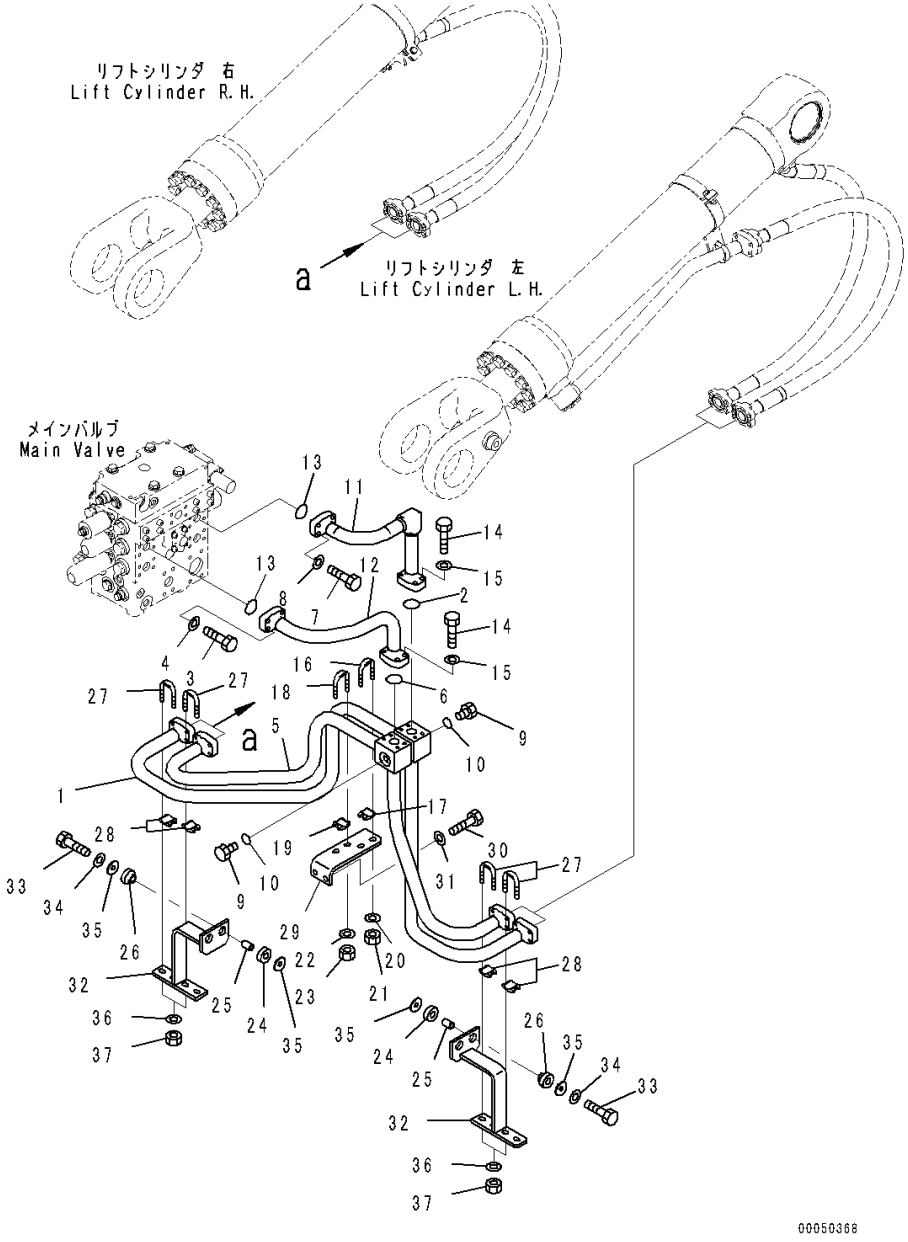

Index	Code	Part Number	Description	Qty	Serial Number
33		01010-81050	Bolt	4	90216-
34		01643-31032	Washer	4	90216-
35		415-64-13120	Washer	8	90216-
36		01643-31032	Washer	8	90216-
37		01597-01009	Nut	8	90216-

FIG. H4200-012007 Hydraulic Piping (Cap)

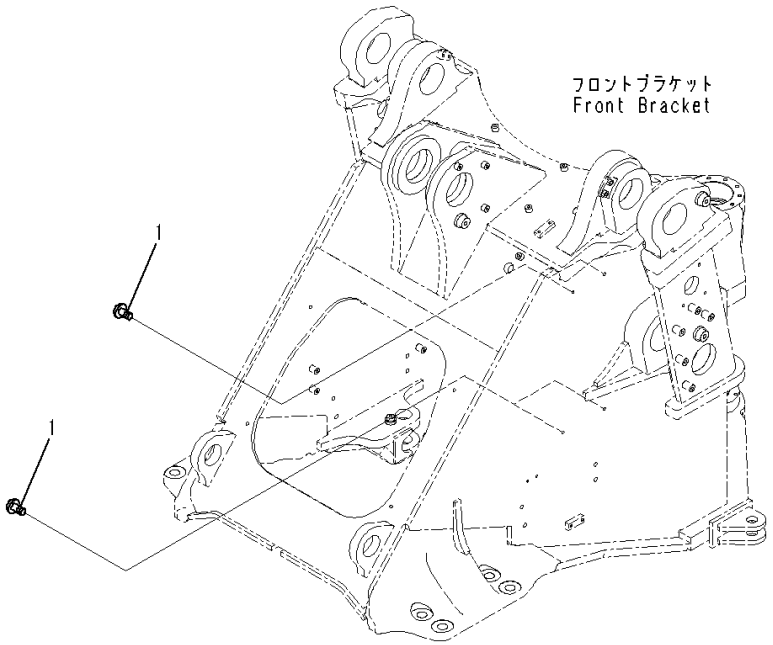

Index	Code	Part Number	Description	Qty	Serial Number
		Note: This list covers following specifications.			
		With 2-Spool Control Valve			
		With 2-Spool Control Valve, Brake Oil Cooling System			
1		22L-46-12150	Cap	4	90216-

FIG. H4200-012008 Hydraulic Piping (PPC Accumulator to Control Valve)

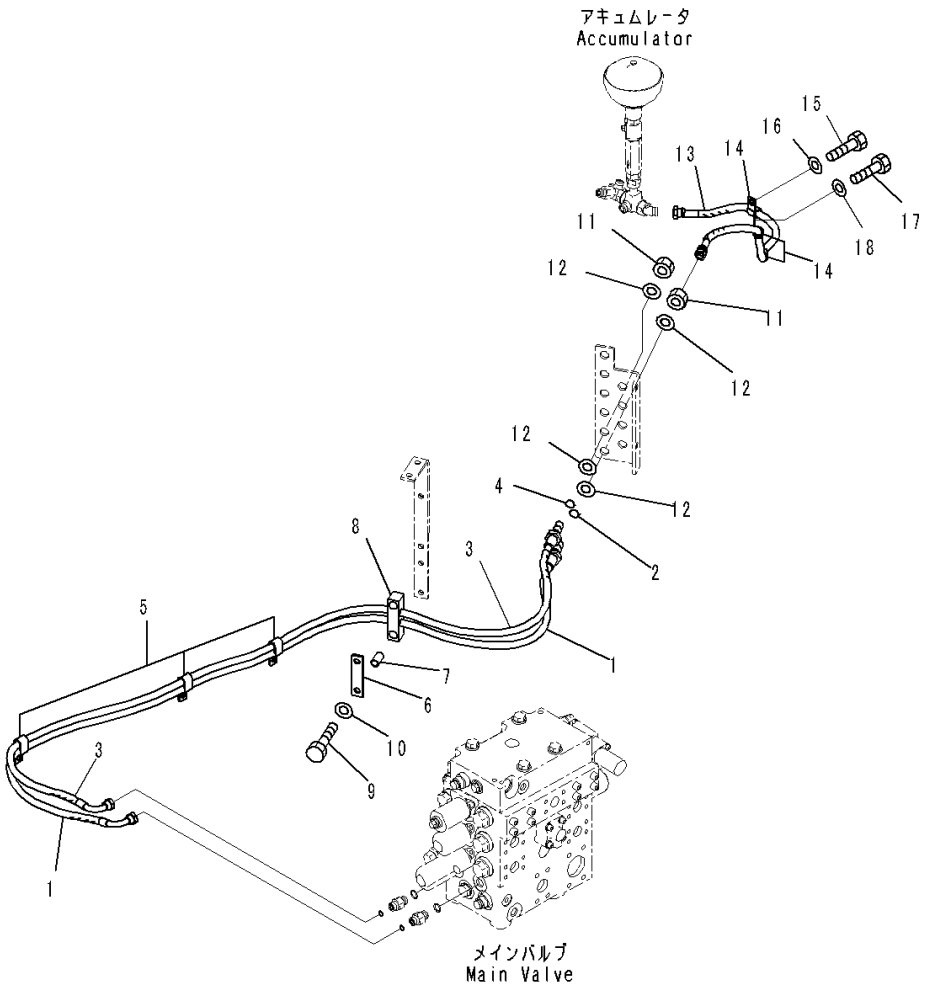

Index	Code	Part Number	Description	Qty	Serial Number
		Note: This list covers following specifications.			
		With 2-Spool Control Valve			
		With 2-Spool Control Valve, ECSS			
		With 2-Spool Control Valve, Brake Oil Cooling System			
		With 2-Spool Control Valve, ECSS, Brake Oil Cooling System			
		With 3-Spool Control Valve			
		With 3-Spool Control Valve, ECSS			
1		421-62-43851	Hose	1	90216-
2		02896-11009	• O-ring	1	90216-
3		421-62-43861	Hose, Black	1	90216-
		21U-62-34720	• Band, Black	2	90216-
4		02896-11009	• O-ring	1	90216-
5		04435-51610	Clip	3	90216-
6		423-62-41550	Plate	1	90216-
7		419-43-17910	Spacer	2	90216-
8		423-62-41330	Rubber	1	90216-
9		01010-81060	Bolt	2	90216-
10		01643-31032	Washer	2	90216-
11		426-62-35620	Nut	2	90216-
12		01643-31845	Washer	4	90216-
13		421-62-45711	Hose	1	90216-
14		04434-51510	Clip	3	90216-
15		01010-81025	Bolt	1	90216-
16		01643-31032	Washer	1	90216-
17		01010-81020	Bolt	2	90216-
18		01643-31032	Washer	2	90216-

FIG. H4200-012009 Hydraulic Piping (Return Piping)

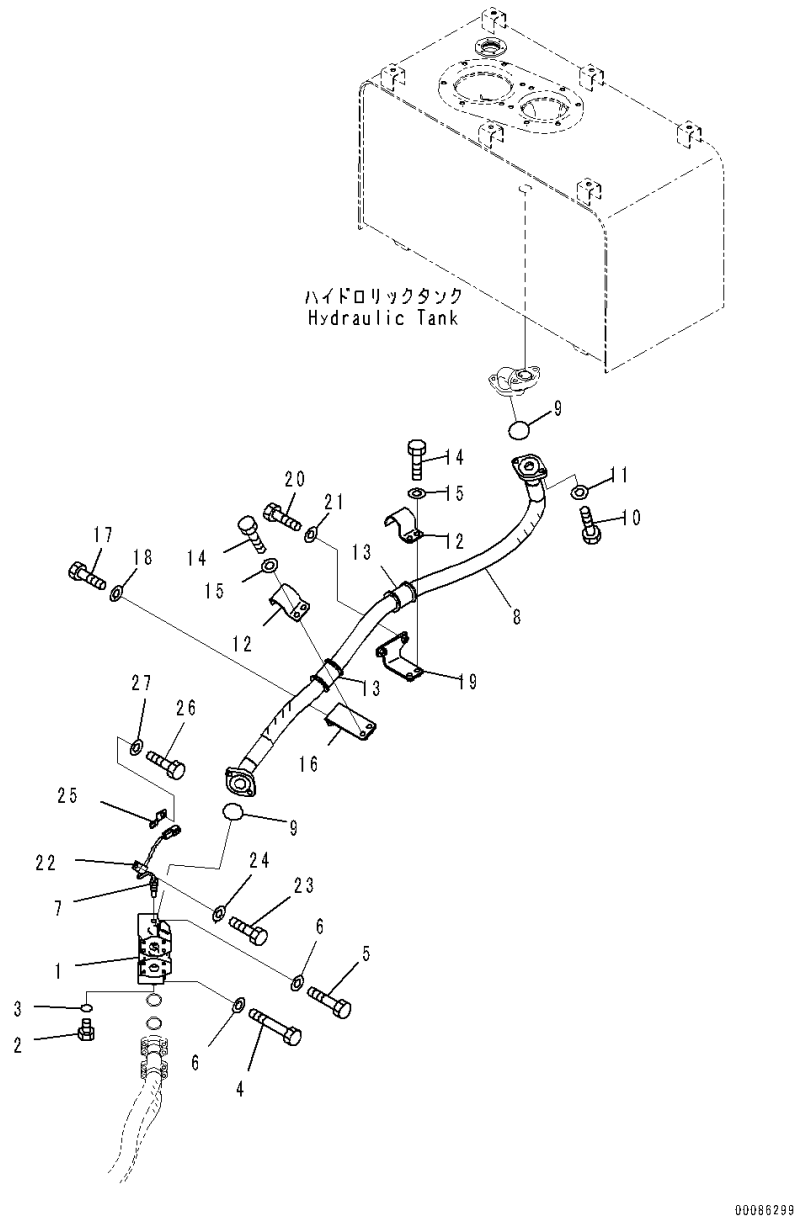

Index	Code	Part Number	Description	Qty	Serial Number
		Note: This list covers following specifications.			
		With 2-Spool Control Valve			
		With 2-Spool Control Valve, ECSS			
		With 3-Spool Control Valve			
		With 3-Spool Control Valve, ECSS			
1		421-62-45210	Block	1	90216-
2		07040-13316	Plug	1	90216-
3		07002-13334	O-ring	1	90216-
4		01010-81095	Bolt	2	90216-
5		01010-81080	Bolt	2	90216-
6		01643-31032	Washer	4	90216-
7		7861-93-3320	Sensor, Oil Temperature	1	90216-
8		421-62-45730	Hose	1	90216-
9		07000-13048	O-ring	2	90216-
10		01010-81240	Bolt	4	90216-
11		01643-31232	Washer	4	90216-
12		22U-62-21551	Clamp	2	90216-
13		07095-01245	Cushion	2	90216-
14		01010-81230	Bolt	4	90216-
15		01643-31232	Washer	4	90216-
16		421-62-45740	Bracket	1	90216-
17		01010-D1250	Bolt	2	90216-
18		01643-71232	Washer	2	90216-
19		421-62-45750	Bracket	1	90216-
20		01010-D1250	Bolt	2	90216-
21		01643-71232	Washer	2	90216-
22		04434-51012	Clip	1	90216-
23		01010-81020	Bolt	1	90216-
24		01643-31032	Washer	1	90216-
25		08193-21012	Clip	1	90216-
26		01010-81020	Bolt	1	90216-
27		01643-31032	Washer	1	90216-

FIG. H4200-012010 Hydraulic Piping (T Block Drain Piping)

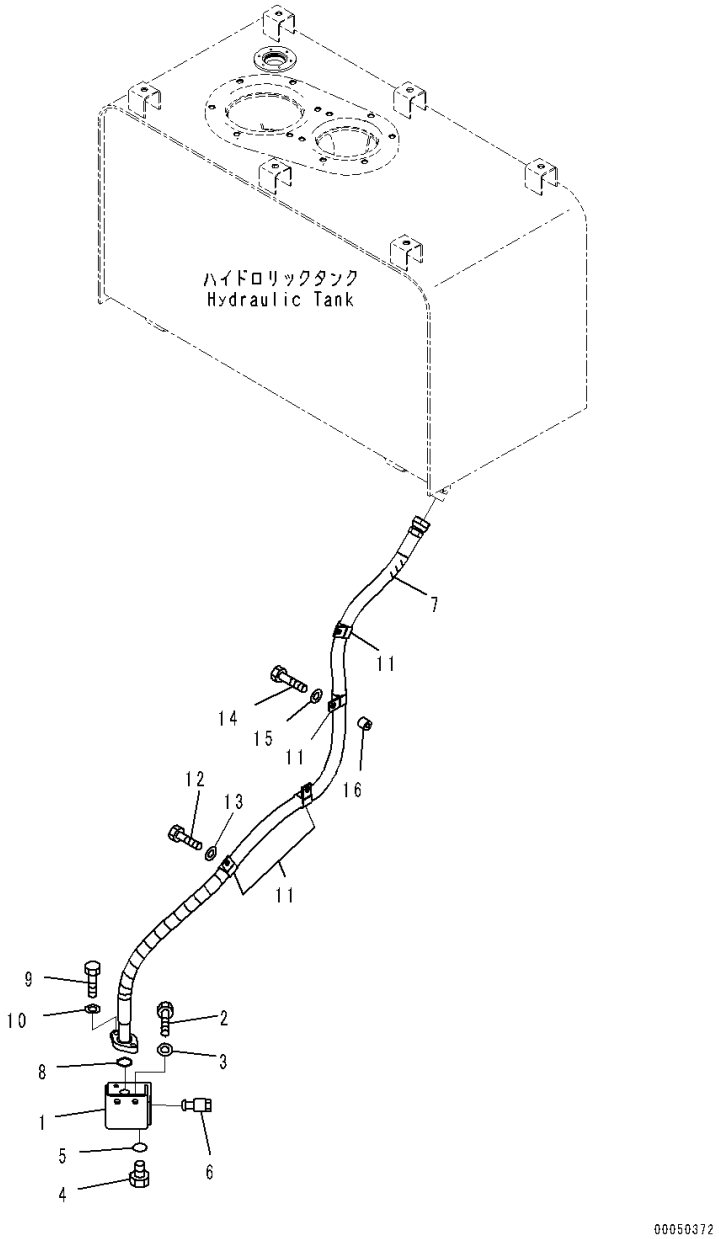

Index	Code	Part Number	Description	Qty	Serial Number
		Note: This list covers following specifications.			
		With 2-Spool Control Valve			
		With 2-Spool Control Valve, ECSS			
		With 2-Spool Control Valve, Brake Oil Cooling System			
		With 2-Spool Control Valve, ECSS, Brake Oil Cooling System			
		With 3-Spool Control Valve			
		With 3-Spool Control Valve, ECSS			
1		421-62-46170	Block	1	90216-
2		01010-81020	Bolt	2	90216-
3		01643-31032	Washer	2	90216-
4		07040-12412	Plug	1	90216-
5		07002-12434	O-ring	1	90216-
6		419-60-35220	Plug	1	90216-
7		421-62-45720	Hose	1	90216-
8		07000-13025	O-ring	1	90216-
9		01010-81030	Bolt	2	90216-
10		01643-31032	Washer	2	90216-
11		04434-52711	Clip	4	90216-
12		01010-81020	Bolt	3	90216-
13		01643-31032	Washer	3	90216-
14		01010-81040	Bolt	1	90216-
15		01643-31032	Washer	1	90216-
16		175-79-83760	Spacer	1	90216-

FIG. H4200-012011 Hydraulic Piping (LS Piping)

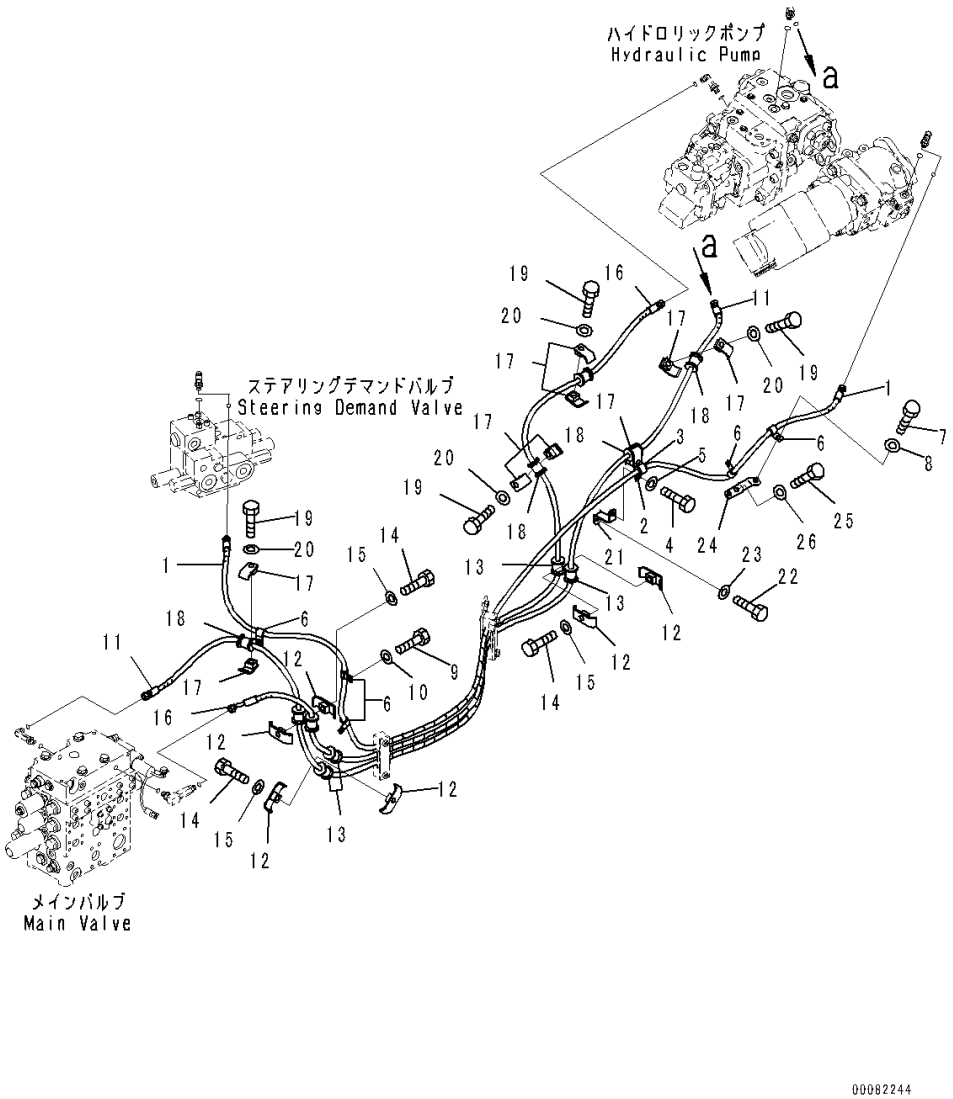

Index	Code	Part Number	Description	Qty	Serial Number
		Note: This list covers following specifications.			
		With 2-Spool Control Valve			
		With 2-Spool Control Valve, ECSS			
		With 2-Spool Control Valve, Brake Oil Cooling System			
		With 2-Spool Control Valve, ECSS, Brake Oil Cooling System			
		With 3-Spool Control Valve			
		With 3-Spool Control Valve, ECSS			
1		421-62-45890	Hose, Yellow	1	90216-
		21U-62-34710	• Band, Yellow	1	90216-
2		04434-52110	Clip	1	90216-
3		07095-20314	Cushion	1	90216-
4		01010-81020	Bolt	1	90216-
5		01643-31032	Washer	1	90216-
6		04434-51510	Clip	5	90216-
7		01010-81020	Bolt	4	90216-
8		01643-31032	Washer	4	90216-
9		01010-81025	Bolt	1	90216-
10		01643-31032	Washer	1	90216-
11		421-62-45760	Hose, White	1	90216-
		21U-62-34770	• Band, White	2	90216-
12		22P-62-13540	Clamp	6	90216-
13		07095-00314	Cushion	6	90216-
14		01010-81260	Bolt	3	90216-
15		01643-31232	Washer	3	90216-
16		421-62-45770	Hose, Blue	1	90216-
		21U-62-34750	• Band, Blue	2	90216-
17		22P-62-13510	Clamp	10	90216-
18		07095-00314	Cushion	5	90216-
19		01010-81260	Bolt	5	90216-
20		01643-31232	Washer	5	90216-
21		421-06-42240	Plate	1	90216-
22		01010-81020	Bolt	1	90216-
23		01643-31032	Washer	1	90216-
24		421-62-46141	Bracket	1	90216-
25		01010-81020	Bolt	2	90216-
26		01643-31032	Washer	2	90216-

FIG. H4200-012012 Hydraulic Piping (Steering Drain Piping)

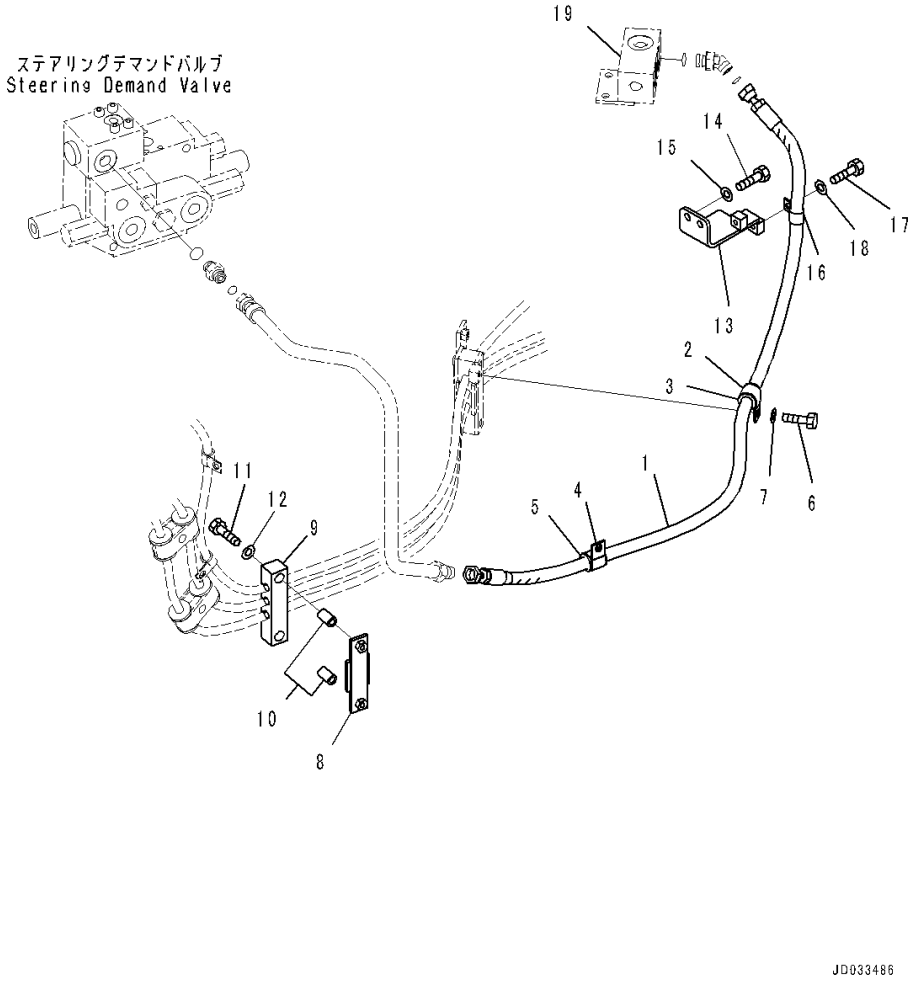

Index	Code	Part Number	Description	Qty	Serial Number
		Note: This list covers following specifications.			
		With 2-Spool Control Valve			
		With 2-Spool Control Valve, ECSS			
		With 2-Spool Control Valve, Brake Oil Cooling System			
		With 2-Spool Control Valve, ECSS, Brake Oil Cooling System			
		With 3-Spool Control Valve			
		With 3-Spool Control Valve, ECSS			
1		421-62-42191	Hose	1	90216-
2		04434-52711	Clip	1	90216-
3		07095-20420	Cushion	1	90216-
4		04434-52711	Clip	1	90216-
5		07095-20420	Cushion	1	90216-
6		01010-81025	Bolt	2	90216-
7		01643-31032	Washer	2	90216-
8		423-62-43221	Plate	1	90216-
9		423-62-34981	Rubber	1	90216-
10		418-62-23790	Spacer	2	90216-
11		01010-81055	Bolt	2	90216-
12		01643-31032	Washer	2	90216-
13		421-62-45180	Bracket	1	90216-
14		01010-81020	Bolt	2	90216-
15		01643-31032	Washer	2	90216-
16		04434-52110	Clip	1	90216-
17		01010-81020	Bolt	1	90216-
18		01643-31032	Washer	1	90216-
19		(423-43-47430)	Block(Refer to Page 705)		-

FIG. H4200-011007 Hydraulic Piping (Accumulator to ECSS Valve Piping)

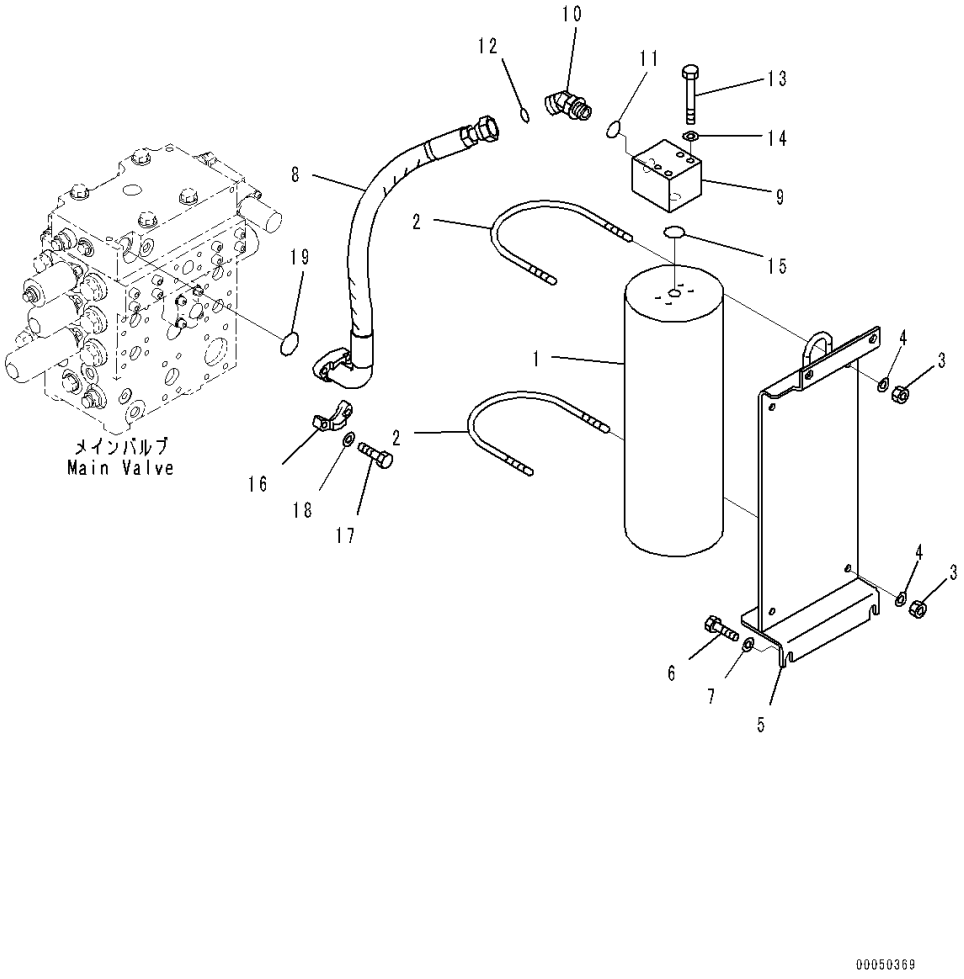

Index	Code	Part Number	Description	Qty	Serial Number
		Note: This list covers following specifications.			
		With 2-Spool Control Valve, ECSS			
		With 2-Spool Control Valve, ECSS, Brake Oil Cooling System			
		With 3-Spool Control Valve, ECSS			
1		423-S99-3142	Accumulator Assembly	1	90278-
2		423-S99-3120	Clip	2	90216-
3		01596-01009	Nut, Flanged	4	90216-
4		01643-31032	Washer	4	90216-
5		423-S99-4110	Bracket	1	90216-
6		01010-D1230	Bolt	4	90216-
7		01643-71232	Washer	4	90216-
8		421-62-43390	Hose	1	90216-
9		421-62-43981	Block	1	90216-
10		02783-10628	Elbow	1	90216-
11		07002-12434	O-ring	1	90216-
12		02896-11018	O-ring	1	90216-
13		01010-81080	Bolt	4	90216-
14		01643-31032	Washer	4	90216-
15		363-18-31390	O-ring	1	90216-
16		07371-31049	Flange, Split	2	90216-
17		07372-21035	Bolt	4	90216-
18		01643-51032	Washer	4	90216-
19		07000-13032	O-ring	1	90216-

FIG. H4200-017009 Hydraulic Piping (Return Piping)

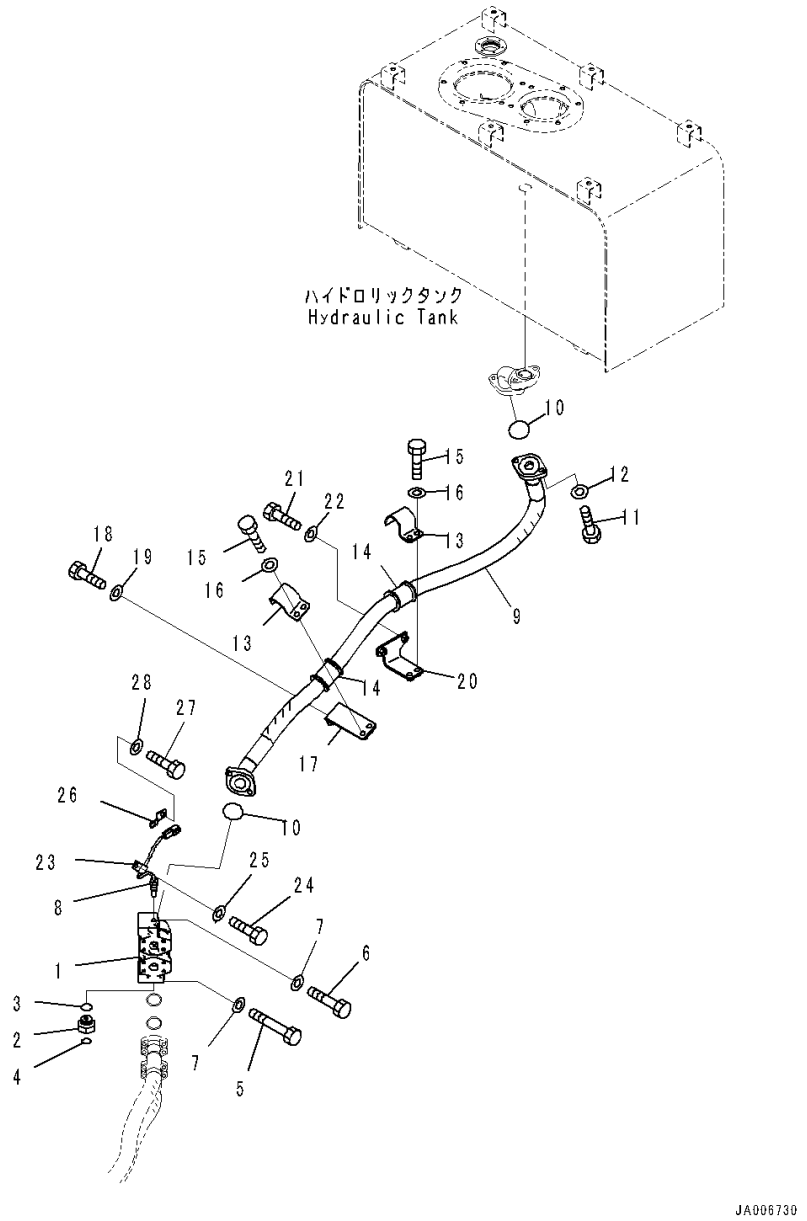

Index	Code	Part Number	Description	Qty	Serial Number
		Note: This list covers following specifications. With 2-Spool Control Valve, Brake Oil Cooling System With 2-Spool Control Valve, ECSS, Brake Oil Cooling System			
1		421-62-45210	Block	1	90216-
2		421-U45-4250	Union	1	90216-
3		07002-23334	O-ring	1	90216-
4		02896-21009	O-ring	1	90216-
5		01010-81095	Bolt	2	90216-
6		01010-81080	Bolt	2	90216-
7		01643-31032	Washer	4	90216-
8		7861-93-3320	Sensor, Oil Temperature	1	90216-
9		421-62-45730	Hose	1	90216-
10		07000-13048	O-ring	2	90216-
11		01010-81240	Bolt	4	90216-
12		01643-31232	Washer	4	90216-
13		22U-62-21551	Clamp	2	90216-
14		07095-01245	Cushion	2	90216-
15		01010-81230	Bolt	4	90216-
16		01643-31232	Washer	4	90216-
17		421-62-45740	Bracket	1	90216-
18		01010-D1250	Bolt	2	90216-
19		01643-71232	Washer	2	90216-
20		421-62-45750	Bracket	1	90216-
21		01010-D1250	Bolt	2	90216-
22		01643-71232	Washer	2	90216-
23		04434-51012	Clip	1	90216-
24		01010-81020	Bolt	1	90216-
25		01643-31032	Washer	1	90216-
26		08193-21012	Clip	1	90216-
27		01010-81020	Bolt	1	90216-
28		01643-31032	Washer	1	90216-

FIG. H4200-015004 Hydraulic Piping (PPC Piping)

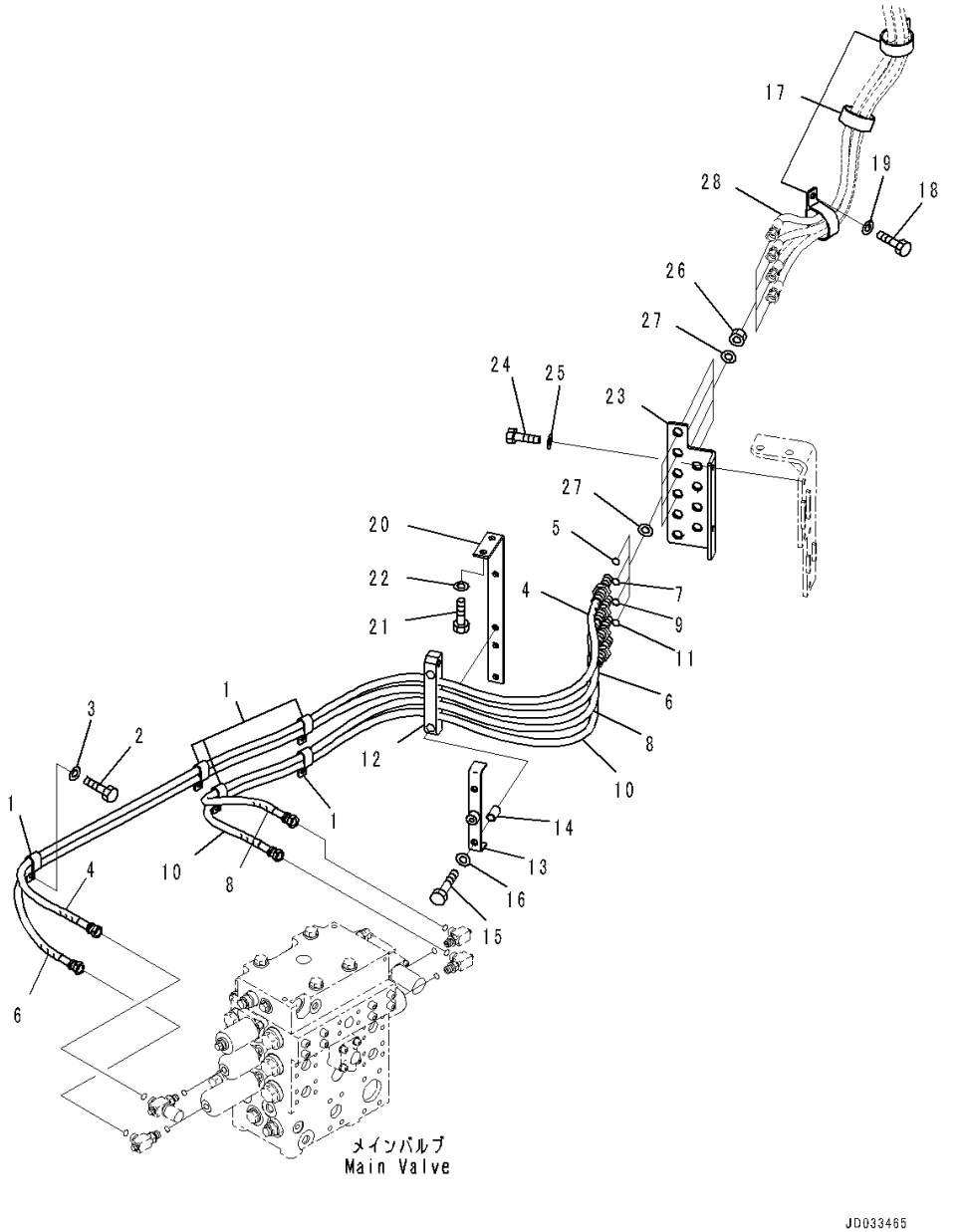

Index	Code	Part Number	Description	Qty	Serial Number
		Note: This list covers following specifications.			
		With 3-Spool Control Valve			
		With 3-Spool Control Valve, ECSS			
1		04435-51610	Clip	5	90216-
2		01010-81020	Bolt	5	90216-
3		01643-31032	Washer	5	90216-
4		421-62-43350	Hose, Blue	1	90216-
		21U-62-34750	• Band, Blue	2	90216-
5		02896-11009	• O-ring	1	90216-
6		421-62-43360	Hose, Yellow	1	90216-
		21U-62-34710	• Band, Yellow	2	90216-
7		02896-11009	• O-ring	1	90216-
8		421-62-43370	Hose, Green	1	90216-
		21U-62-34730	• Band, Green	2	90216-
9		02896-11009	• O-ring	1	90216-
10		421-62-43380	Hose, White	1	90216-
		21U-62-34770	• Band, White	2	90216-
11		02896-11009	• O-ring	1	90216-
12		419-62-23990	Rubber	1	90216-
13		421-62-46460	Plate	1	90216-
14		419-43-17910	Spacer	2	90216-
15		01010-81060	Bolt	2	90216-
16		01643-31032	Washer	2	90216-
17		207-62-33690	Clip	3	90216-
18		01010-81020	Bolt	3	90216-
19		01643-31032	Washer	3	90216-
20		421-62-44260	Bracket	1	90216-
21		01010-81025	Bolt	2	90216-
22		01643-31032	Washer	2	90216-
23		421-62-46510	Plate	1	90216-
24		01010-81025	Bolt	2	90216-
25		01643-31032	Washer	2	90216-
26		426-62-35620	Nut	4	90216-
27		01643-31845	Washer	8	90216-
28		(421-43-48150)	Hose(Refer to Page 646)		-
		(421-43-48150)	Hose(Refer to Page 652)		-
		(421-43-48150)	Hose(Refer to Page 661)		-
		(421-43-48150)	Hose(Refer to Page 669)		-

FIG. H4200-015005 Hydraulic Piping (Bucket Cylinder Piping)

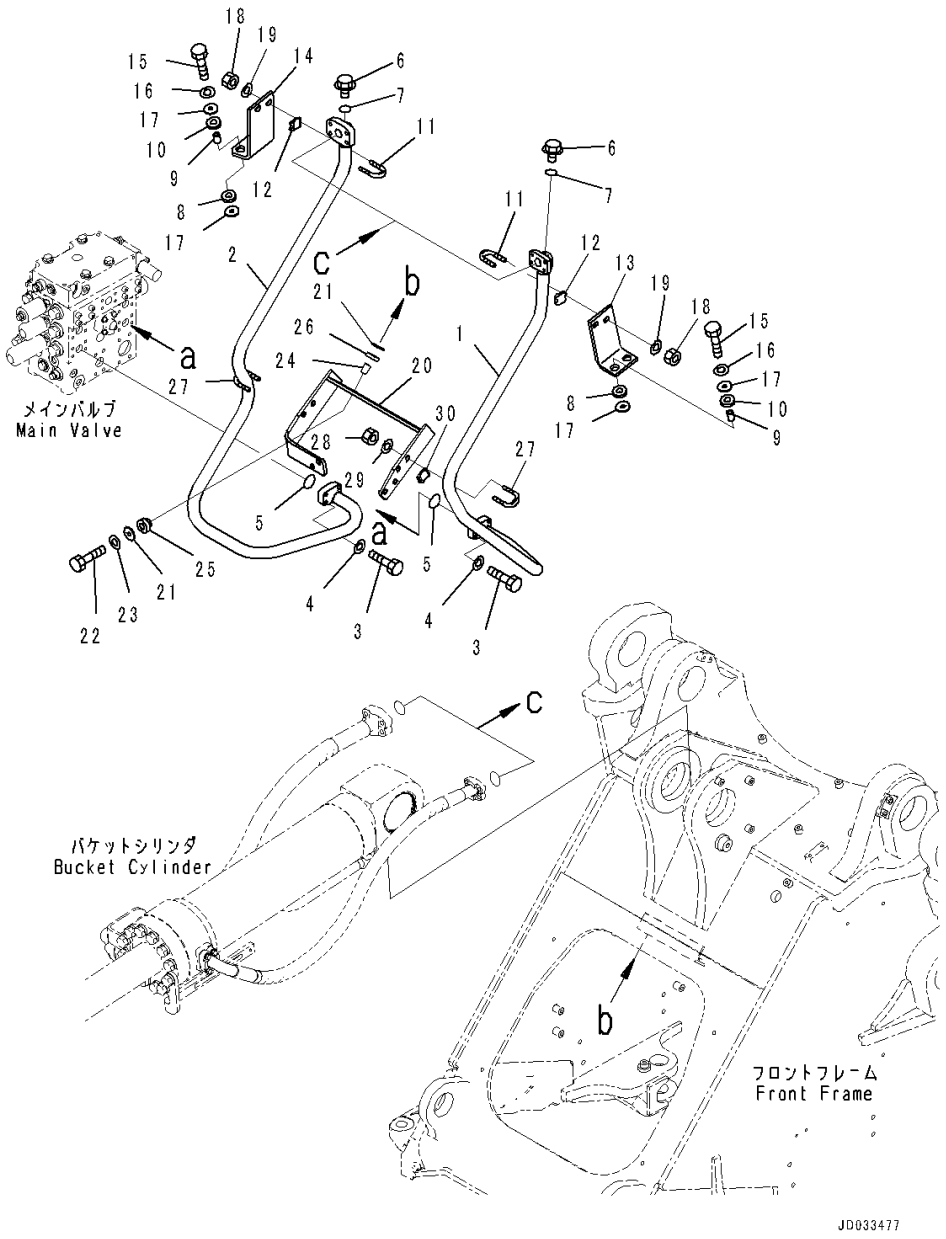

Index	Code	Part Number	Description	Qty	Serial Number
		Note: This list covers following specifications.			
		With 3-Spool Control Valve			
		With 3-Spool Control Valve, ECSS			
1		421-62-43212	Tube	1	90216-
2		421-62-43222	Tube	1	90216-
3		07372-21040	Bolt	8	90216-
4		01643-51032	Washer	8	90216-
5		07000-13035	O-ring	2	90216-
6		708-8E-16150	Plug	2	90216-
7		07002-11023	O-ring	2	90216-
8		415-64-13130	Cushion	4	90216-
9		421-62-18560	Spacer	4	90216-
10		419-43-17930	Cushion	4	90216-
11		07283-33450	Clip	2	90216-
12		07283-53444	Seat	2	90216-
13		421-62-43630	Plate	1	90216-
14		421-62-43640	Plate	1	90216-
15		01010-81050	Bolt	4	90216-
16		01643-31032	Washer	4	90216-
17		415-64-13120	Washer	8	90216-
18		01597-01009	Nut	4	90216-
19		203-54-56970	Washer	4	90216-
20		421-877-4530	Bracket	1	90216-
21		415-64-13120	Washer	4	90216-
22		01010-81060	Bolt	2	90216-
23		01643-31032	Washer	2	90216-
24		421-62-18560	Spacer	2	90216-
25		419-43-17930	Cushion	2	90216-
26		415-64-13130	Cushion	2	90216-
27		07283-33450	Clip	2	90216-
28		01597-01009	Nut	4	90216-
29		01643-31032	Washer	4	90216-
30		07283-53444	Seat	2	90216-

FIG. H4200-015007 Hydraulic Piping (With 3-Spool Control Valve) (Cap)

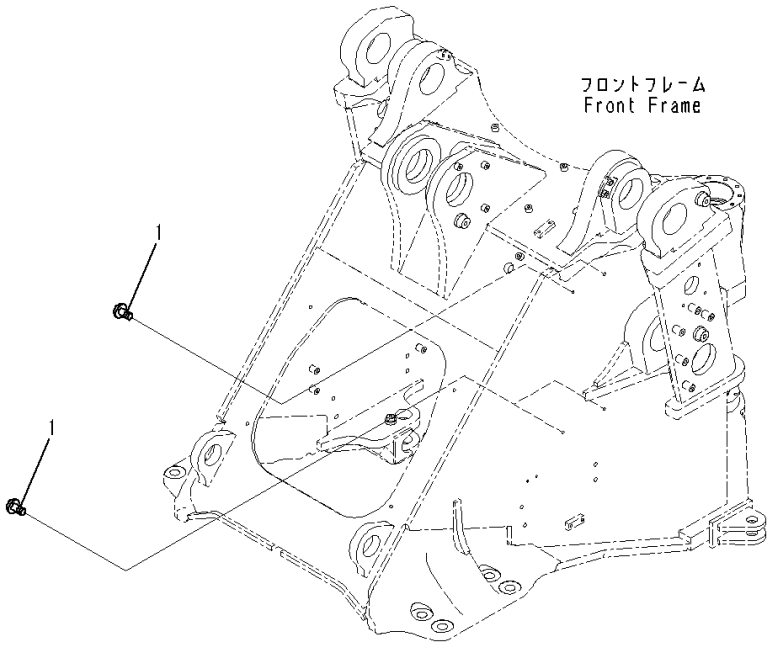

Index	Code	Part Number	Description	Qty	Serial Number
1		22L-46-12150	Cap	4	90216-

FIG. H4200-015013 Hydraulic Piping (Attachment Piping) (1/2)

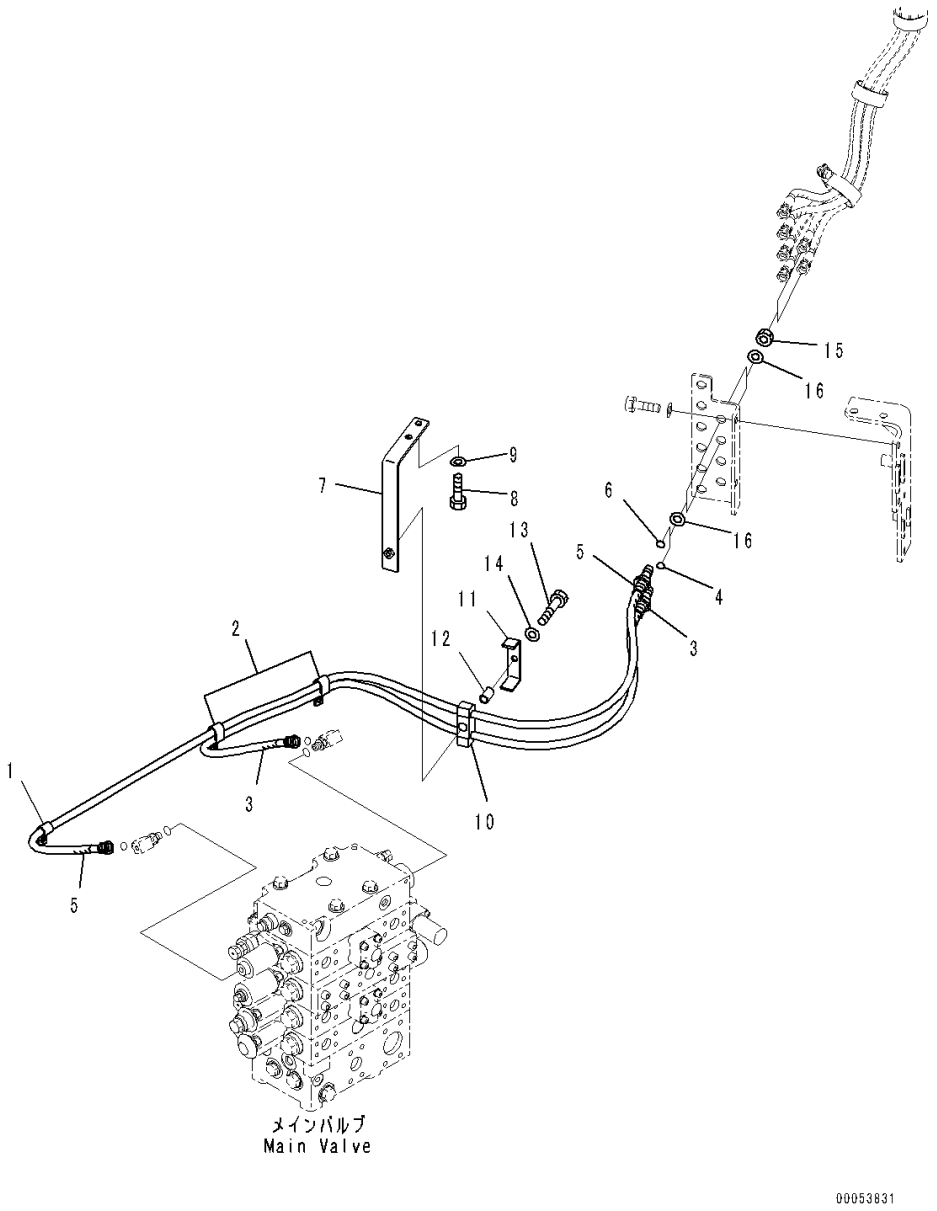

Index	Code	Part Number	Description	Qty	Serial Number
		Note: This list covers following specifications.			
		With 3-Spool Control Valve			
		With 3-Spool Control Valve, ECSS			
1		04434-51610	Clip	1	90216-
2		04435-51610	Clip	2	90216-
3		421-877-4571	Hose, Blue-White	1	90216-
		21U-62-34750	• Band, Blue	2	90216-
		21U-62-34770	• Band, White	2	90216-
4		02896-11009	• O-ring	1	90216-
5		421-877-4581	Hose, Green-White	1	90216-
		21U-62-34730	• Band, Green	2	90216-
		21U-62-34770	• Band, White	2	90216-
6		02896-11009	• O-ring	1	90216-
7		421-877-4590	Bracket	1	90216-
8		01010-81025	Bolt	2	90216-
9		01643-31032	Washer	2	90216-
10		423-877-2540	Rubber	1	90216-
11		421-62-12120	Plate	1	90216-
12		419-43-17910	Spacer	1	90216-
13		01010-81055	Bolt	1	90216-
14		01643-31032	Washer	1	90216-
15		426-62-35620	Nut	2	90216-
16		01643-31845	Washer	4	90216-

FIG. H4200-015014 Hydraulic Piping (Attachment Piping) (2/2)

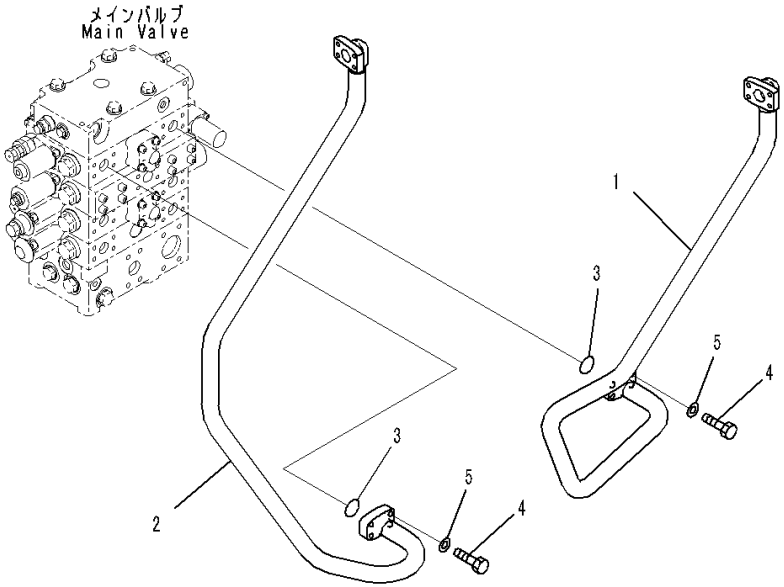

Index	Code	Part Number	Description	Qty	Serial Number
		Note: This list covers following specifications.			
		With 3-Spool Control Valve			
		With 3-Spool Control Valve, ECSS			
1		421-877-4510	Tube	1	90216-
2		421-877-4520	Tube	1	90216-
3		07000-13035	O-ring	2	90216-
4		07372-21040	Bolt	8	90216-
5		01643-51032	Washer	8	90216-

FIG. H4200-015015 Hydraulic Piping (Mounting)

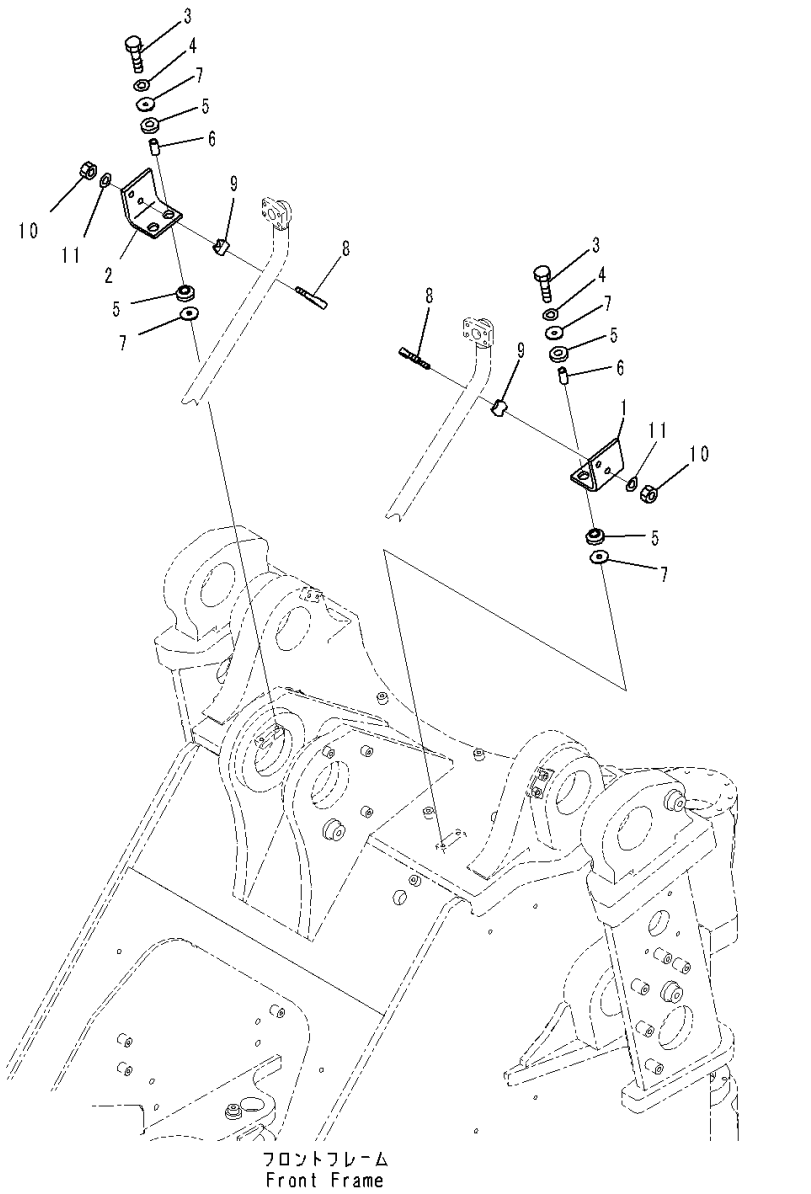

Index	Code	Part Number	Description	Qty	Serial Number
		Note: This list covers following specifications.			
		With 3-Spool Control Valve			
		With 3-Spool Control Valve, ECSS			
1		421-877-4730	Plate	1	90216-
2		421-877-4740	Plate	1	90216-
3		01010-81050	Bolt	4	90216-
4		01643-31032	Washer	4	90216-
5		419-43-17930	Cushion	8	90216-
6		421-62-18560	Spacer	4	90216-
7		415-64-13120	Washer	8	90216-
8		07283-33450	Clip	4	90216-
9		07283-53444	Seat	4	90216-
10		01597-01009	Nut	8	90216-
11		01643-31032	Washer	8	90216-

FIG. H4410-008001 Steering Hydraulic Piping (Steering Cylinder Piping)

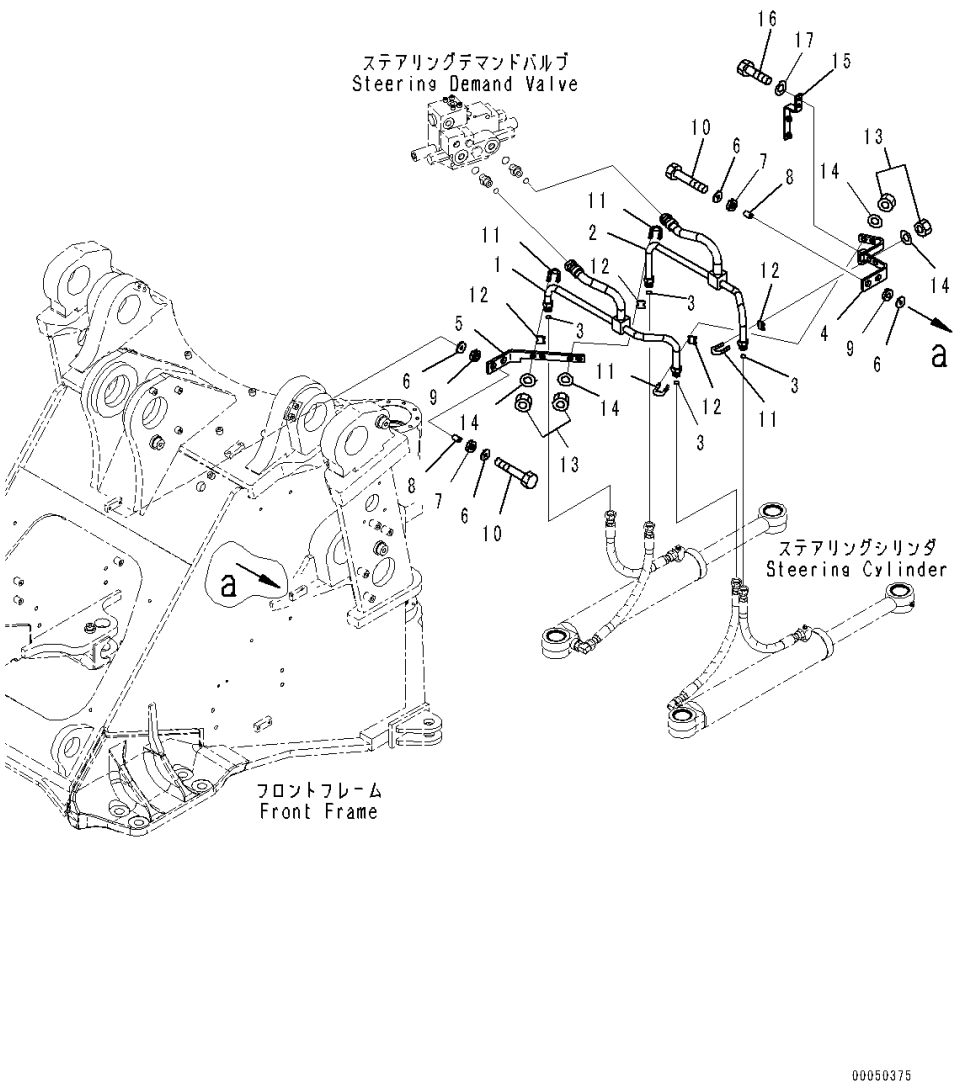

Index	Code	Part Number	Description	Qty	Serial Number
		Note: This list covers following specifications.			
		With Joystick Steering System			
		With Orbitrol Steering System			
1		421-62-42370	Tube	1	90216-
2		421-62-42380	Tube	1	90216-
3		02896-11015	O-ring	4	90216-
4		421-62-42290	Bracket, L.H.	1	90216-
5		421-62-21130	Plate, R.H.	1	90216-
6		415-64-13120	Washer	8	90216-
7		415-64-13130	Cushion	4	90216-
8		421-62-18560	Spacer	4	90216-
9		419-43-17930	Cushion	4	90216-
10		01010-81050	Bolt	4	90216-
11		07283-32244	Clip	4	90216-
12		07283-52232	Seat	4	90216-
13		01597-01009	Nut	8	90216-
14		01643-31032	Washer	8	90216-
15		421-62-41431	Bracket	1	90216-
16		01010-81020	Bolt	2	90216-
17		01643-31032	Washer	2	90216-

FIG. H4410-008002 Steering Hydraulic Piping (Steering Demand Valve Piping)

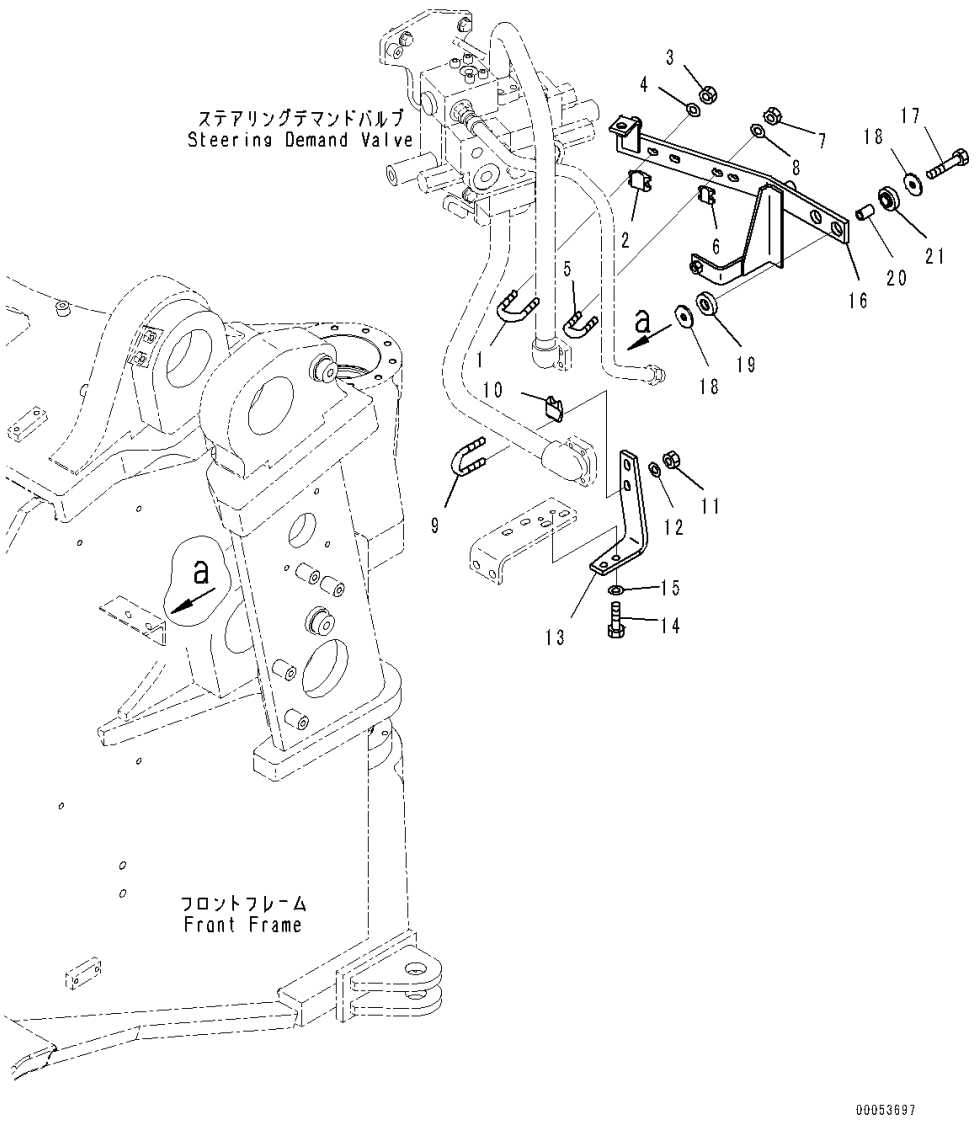

Index	Code	Part Number	Description	Qty	Serial Number
		Note: This list covers following specifications.			
		With Joystick Steering System			
		With Orbitrol Steering System			
1		07283-33450	Clip	1	90216-
2		07283-53444	Seat	1	90216-
3		01597-01009	Nut	2	90216-
4		01643-31032	Washer	2	90216-
5		07283-32244	Clip	1	90216-
6		07283-52232	Seat	1	90216-
7		01597-01009	Nut	2	90216-
8		01643-31032	Washer	2	90216-
9		07283-33450	Clip	1	90216-
10		07283-53444	Seat	1	90216-
11		01597-01009	Nut	2	90216-
12		01643-31032	Washer	2	90216-
13		421-62-42120	Plate	1	90216-
14		01010-81025	Bolt	2	90216-
15		01643-31032	Washer	2	90216-
16		421-62-42142	Bracket	1	90216-
17		01010-81055	Bolt	2	90216-
18		415-64-13120	Washer	4	90216-
19		415-64-13130	Cushion	2	90216-
20		421-62-18560	Spacer	2	90216-
21		419-43-17930	Cushion	2	90216-

FIG. H4410-008003 Steering Hydraulic Piping (Mounting) (1/3)

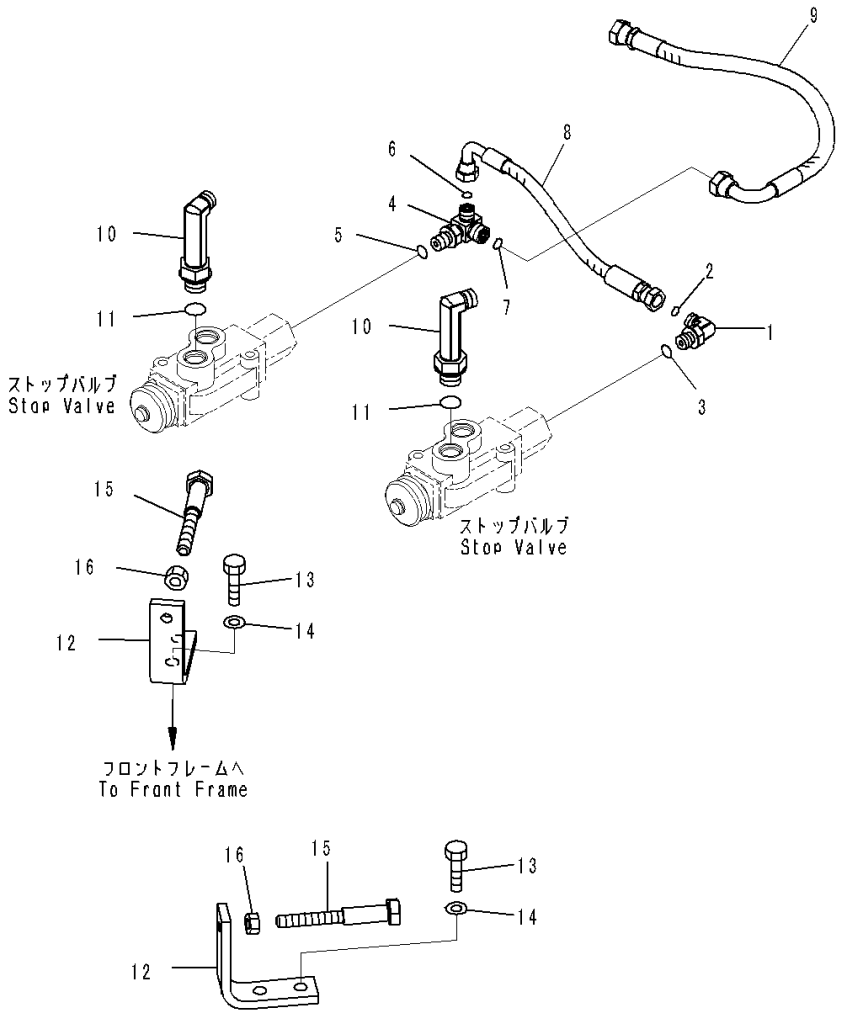

Index	Code	Part Number	Description	Qty	Serial Number
		Note: This list covers following specifications.			
		With Joystick Steering System			
		With Orbitrol Steering System			
1		02782-10210	Elbow	1	90216-
2		02896-11008	O-ring	1	90216-
3		07002-11423	O-ring	1	90216-
4		20Y-62-45710	Tee	1	90216-
5		07002-11423	O-ring	1	90216-
6		02896-11008	O-ring	1	90216-
7		02896-11009	O-ring	1	90216-
8		423-62-41730	Hose	1	90216-
9		421-62-46150	Hose	1	90216-
10		02782-10317	Elbow	2	90216-
11		07002-12034	O-ring	2	90216-
12		421-62-12310	Plate	2	90216-
13		01010-81030	Bolt	4	90216-
14		01643-31032	Washer	4	90216-
15		421-62-12320	Bolt	2	90216-
16		01580-11210	Nut	2	90216-

FIG. H4410-008004 Steering Hydraulic Piping (Inner Parts, Stop Valve)

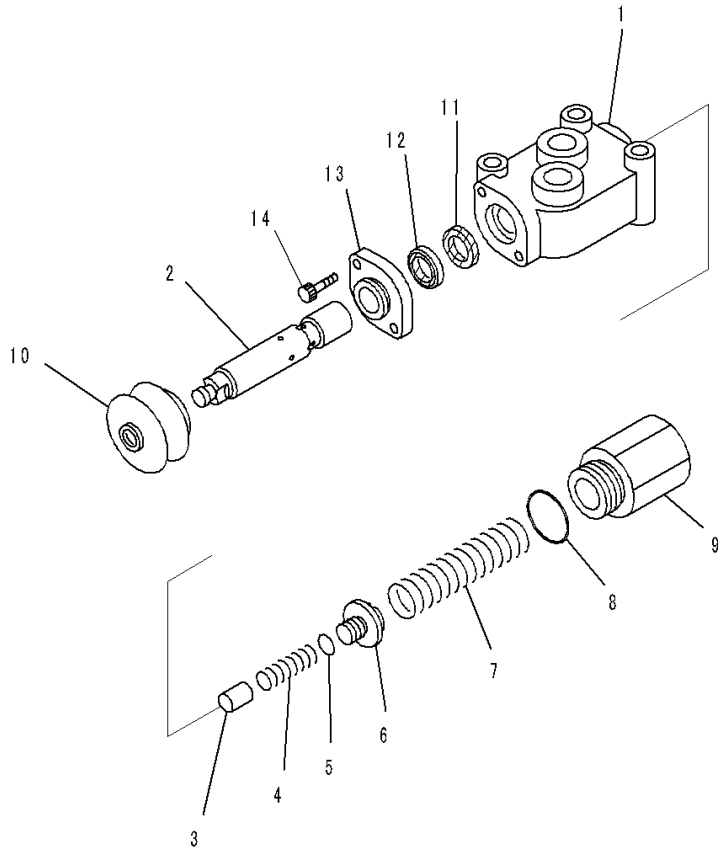

Index	Code	Part Number	Description	Qty	Serial Number
		Note: This list covers following specifications.			
		With Joystick Steering System			
		With Orbitrol Steering System			
		421-64-15501	Valve Assembly, Stop	2	90216-
1	C1		• Body	1	90216-
2	C1		• Spool	1	90216-
3		421-64-15530	• Poppet	1	90216-
4		421-64-15540	• Spring	1	90216-
5		421-64-15550	• O-ring	1	90216-
6		421-64-15560	• End	1	90216-
7		421-64-15570	• Spring	1	90216-
8		421-64-15580	• O-ring	1	90216-
9		421-64-15590	• Plug	1	90216-
10		421-64-15910	• Boot	1	90216-
11		421-64-15920	• Seal	1	90216-
12		421-64-15930	• Wiper	1	90216-
13		421-64-15940	• Cover	1	90216-
14		421-64-15950	• Bolt	2	90216-

FIG. H4410-008005 Steering Hydraulic Piping (Mounting) (2/3)

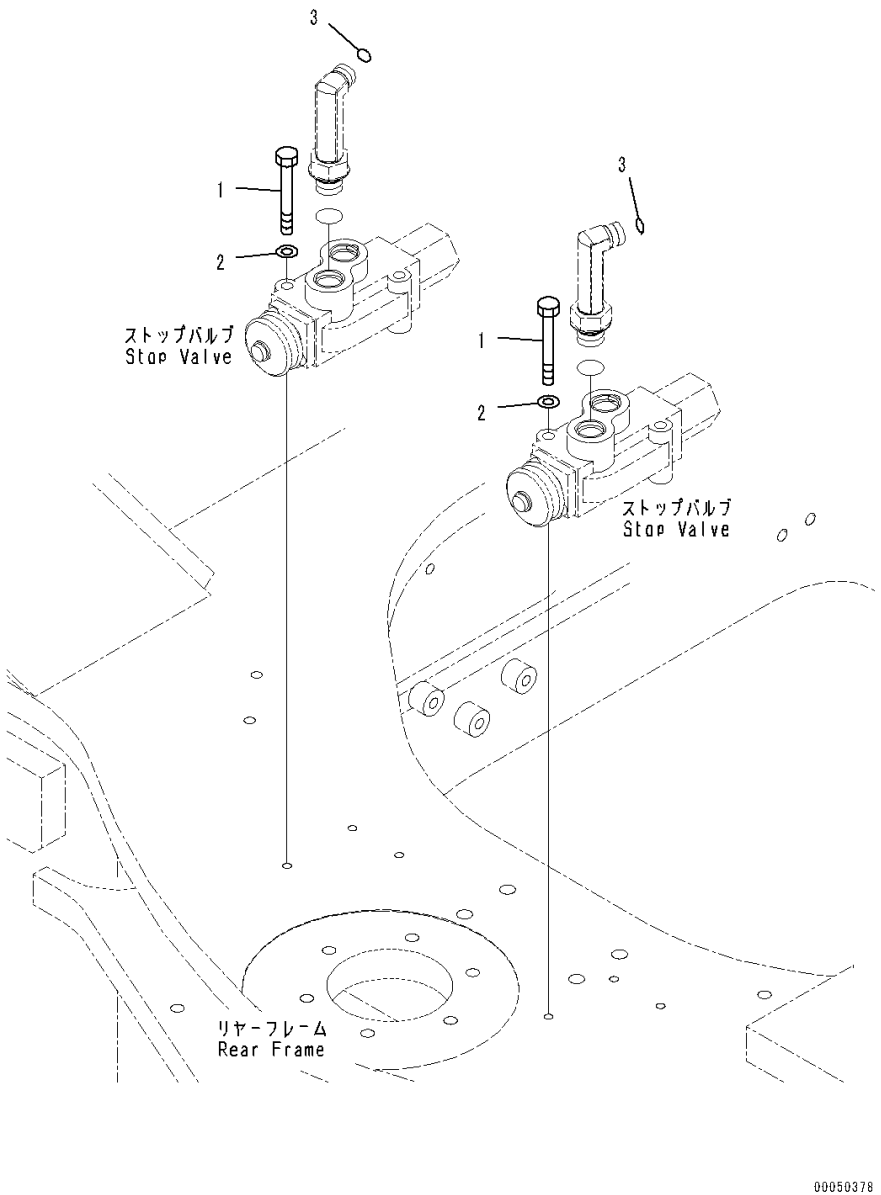

Index	Code	Part Number	Description	Qty	Serial Number
		Note: This list covers following specifications.			
		With Joystick Steering System			
		With Orbitrol Steering System			
1		01010-80865	Bolt	6	90216-
2		01643-30823	Washer	6	90216-
3		02896-11009	O-ring	2	90216-

FIG. H4410-008006 Steering Hydraulic Piping (Mounting) (3/3)

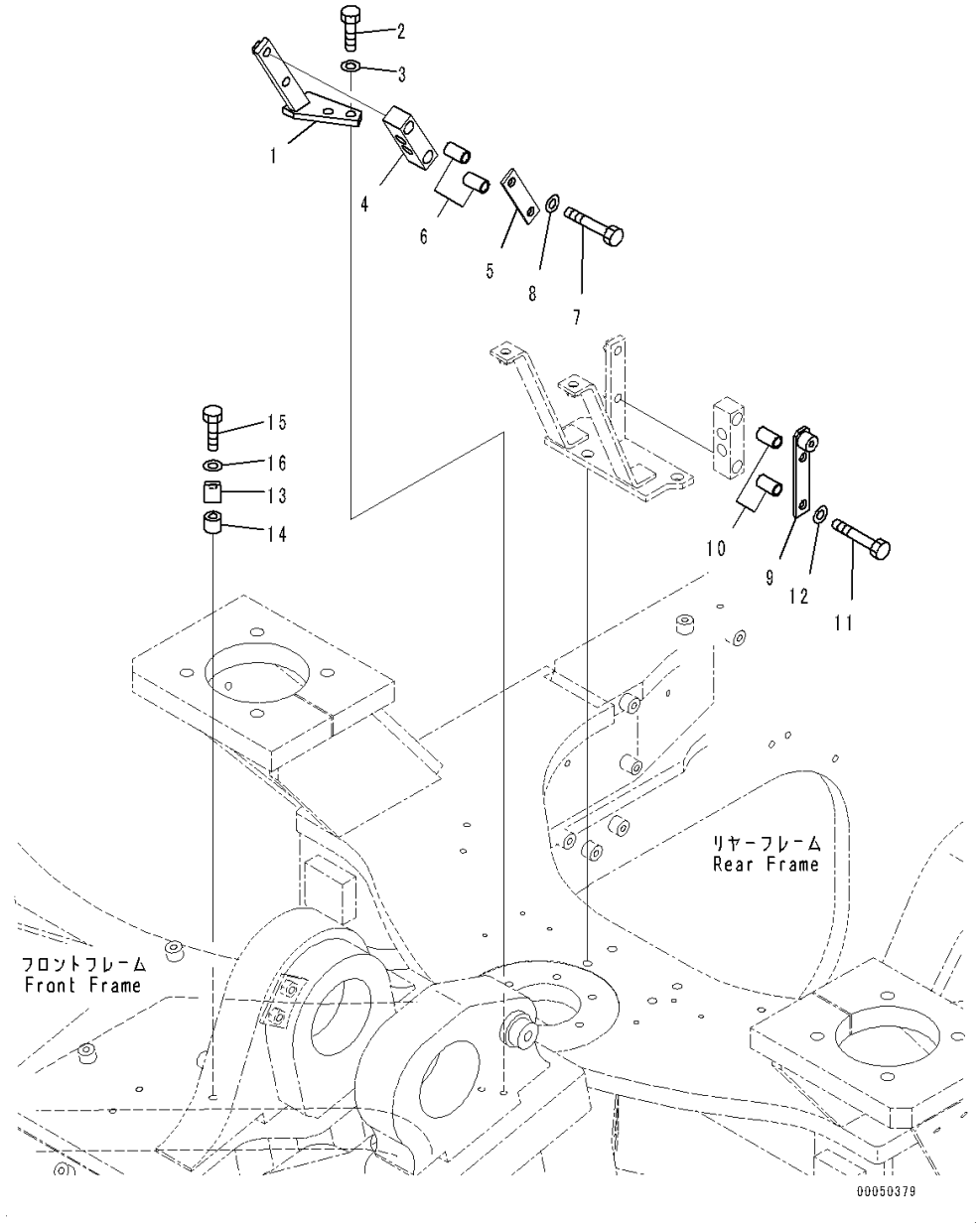

Index	Code	Part Number	Description	Qty	Serial Number
		Note: This list covers following specifications.			
		With Joystick Steering System			
		With Orbitrol Steering System			
1		421-62-45151	Bracket	1	90216-
2		01010-81030	Bolt	2	90216-
3		01643-31032	Washer	2	90216-
4		423-62-41330	Rubber	2	90216-
5		423-62-41550	Plate	1	90216-
6		419-43-17910	Spacer	2	90216-
7		01010-81060	Bolt	2	90216-
8		01643-31032	Washer	2	90216-
9		423-62-41560	Plate	1	90216-
10		419-43-17910	Spacer	2	90216-
11		01010-81060	Bolt	2	90216-
12		01643-31032	Washer	2	90216-
13		04434-51610	Clip	1	90216-
14		175-79-83760	Spacer	1	90216-
15		01010-81040	Bolt	1	90216-
16		01643-31032	Washer	1	90216-

FIG. H4410-008007 Steering Hydraulic Piping (With Joystick Steering System) (Stop Valve Piping)

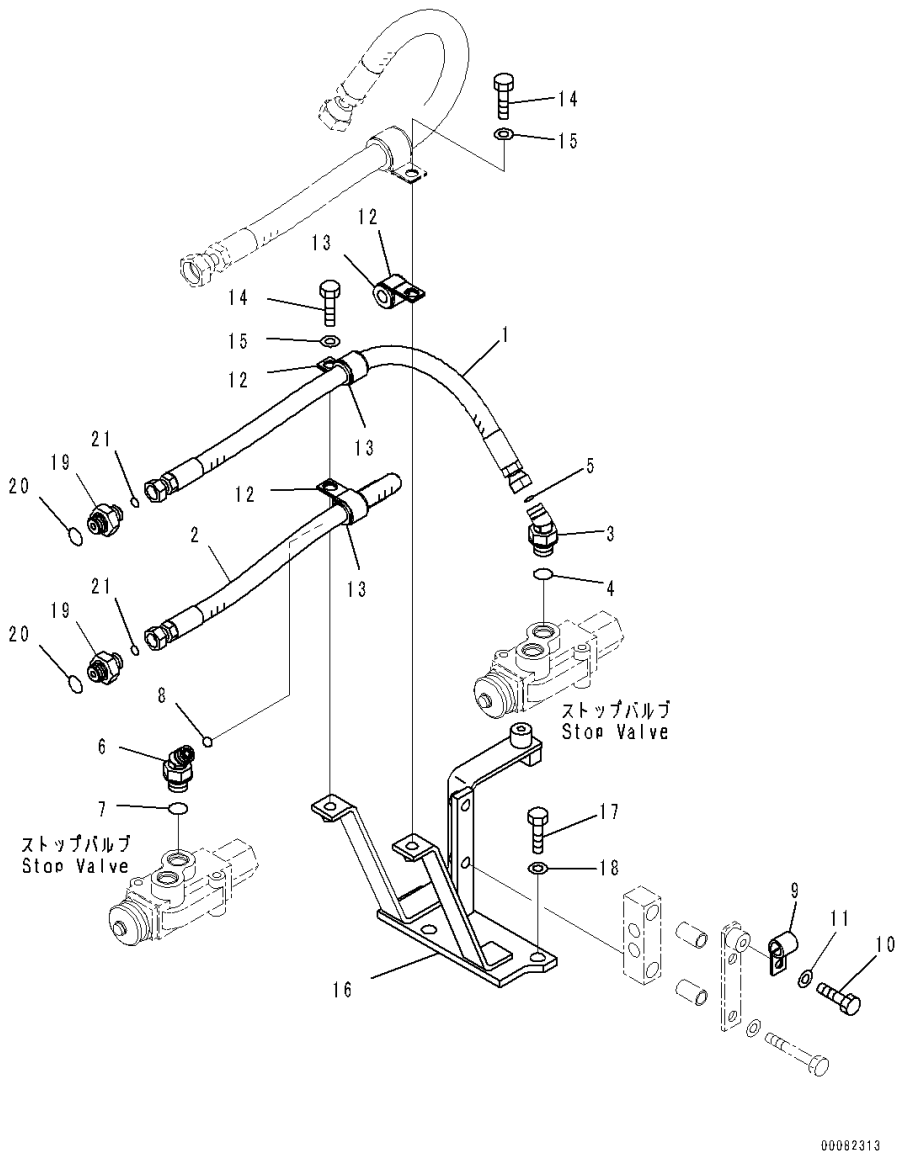

Index	Code	Part Number	Description	Qty	Serial Number
1		423-S33-4180	Hose	1	90216-
2		423-S33-4160	Hose	1	90216-
3		02783-10315	Elbow	1	90216-
4		07002-12034	O-ring	1	90216-
5		02896-11009	O-ring	1	90216-
6		02783-10315	Elbow	1	90216-
7		07002-12034	O-ring	1	90216-
8		02896-11009	O-ring	1	90216-
9		04434-51510	Clip	1	90216-
10		01010-81020	Bolt	1	90216-
11		01643-31032	Washer	1	90216-
12		04434-52312	Clip	3	90216-
13		07095-20314	Cushion	3	90216-
14		01010-81025	Bolt	2	90216-
15		01643-31032	Washer	2	90216-
16		421-62-45830	Bracket	1	90216-
17		01010-81435	Bolt	2	90216-
18		01643-31445	Washer, Flat	2	90216-
19		424-62-31170	Nipple	2	90216-
20		415-62-11560	O-ring	2	90216-
21		02896-11009	O-ring	2	90216-

FIG. H4410-008008 Steering Hydraulic Piping (With Joystick Steering System) (Steering Drain Piping)

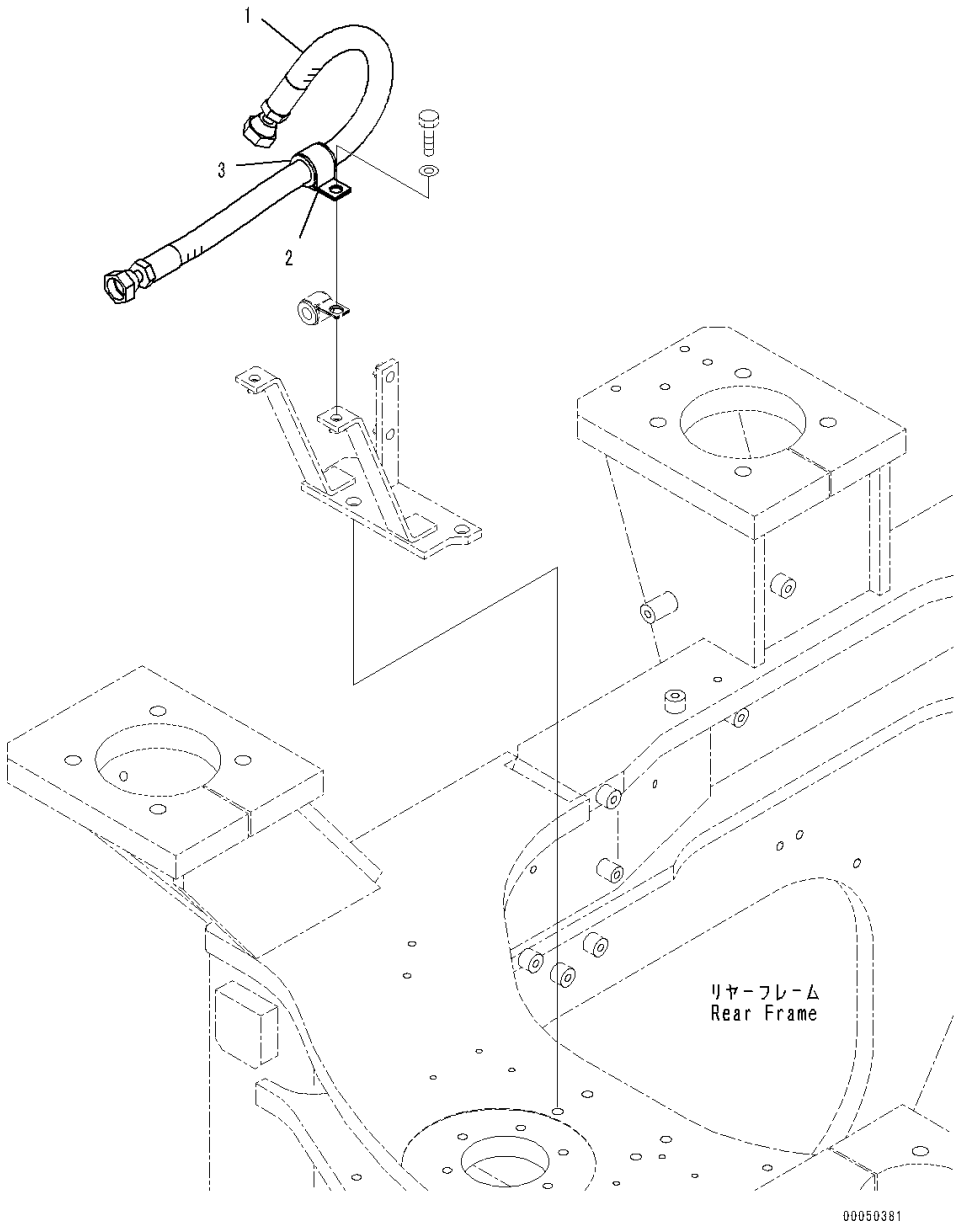

Index	Code	Part Number	Description	Qty	Serial Number
1		423-S33-4150	Hose	1	90216-
2		04434-53212	Clip	1	90216-
3		07095-20523	Cushion	1	90216-

FIG. H4410-007007 Steering Hydraulic Piping (With Orbitrol Steering System) (Stop Valve Piping)

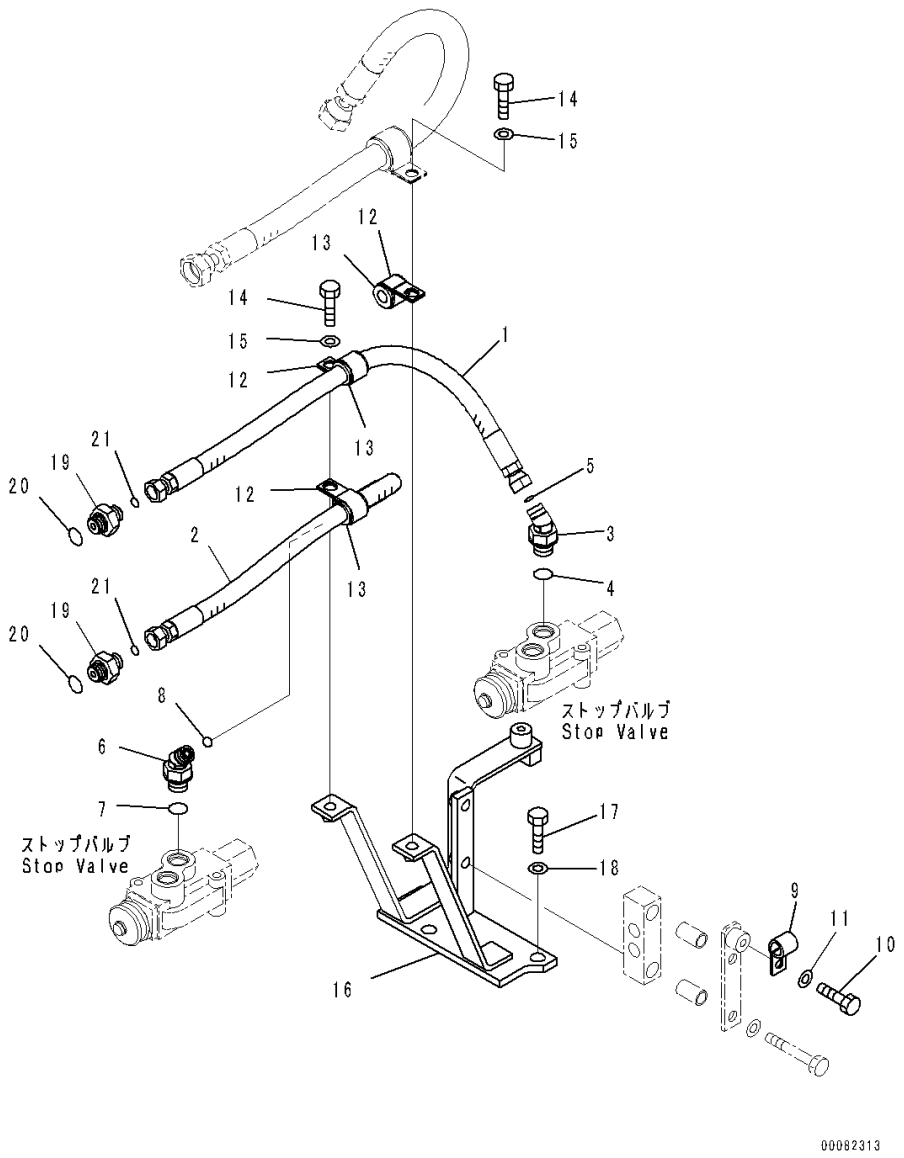

Index	Code	Part Number	Description	Qty	Serial Number
1		423-62-41690	Hose	1	90216-
2		423-62-41680	Hose	1	90216-
3		02783-10315	Elbow	1	90216-
4		07002-12034	O-ring	1	90216-
5		02896-11009	O-ring	1	90216-
6		02783-10315	Elbow	1	90216-
7		07002-12034	O-ring	1	90216-
8		02896-11009	O-ring	1	90216-
9		04434-51510	Clip	1	90216-
10		01010-81020	Bolt	1	90216-
11		01643-31032	Washer	1	90216-
12		04434-52312	Clip	3	90216-
13		07095-20314	Cushion	3	90216-
14		01010-81025	Bolt	2	90216-
15		01643-31032	Washer	2	90216-
16		421-62-45830	Bracket	1	90216-
17		01010-81435	Bolt	2	90216-
18		01643-31445	Washer, Flat	2	90216-
19		424-62-31170	Nipple	2	90216-
20		415-62-11560	O-ring	2	90216-
21		02896-11009	O-ring	2	90216-

FIG. H4410-007008 Steering Hydraulic Piping (With Orbitrol Steering System) (Steering Drain Piping)

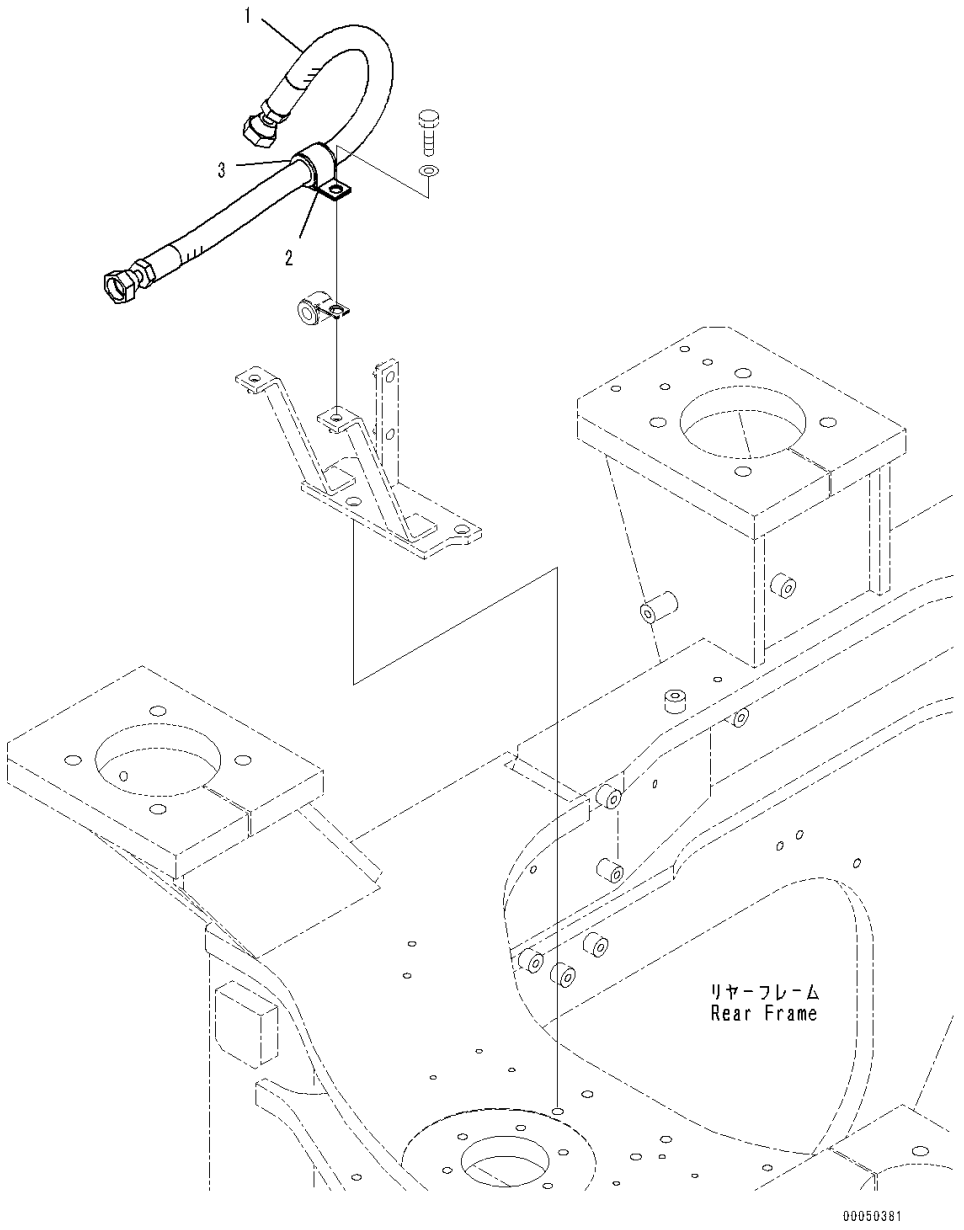

Index	Code	Part Number	Description	Qty	Serial Number
1		423-62-41670	Hose	1	90216-
2		04434-53212	Clip	1	90216-
3		07095-20523	Cushion	1	90216-

FRAME AND ITS RELATED PARTS

FIG. J4110-009001 Front Frame

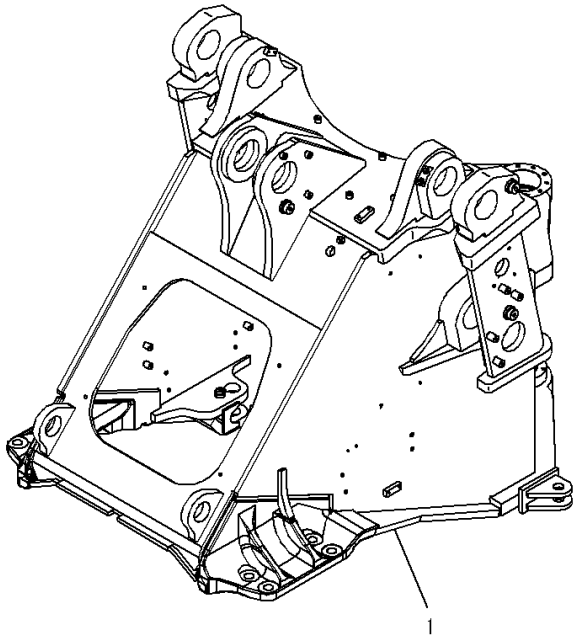

00050575

Index	Code	Part Number	Description	Qty	Serial Number
1		421-46-41502	Frame	1	90490-

FIG. J4110-011001 Front Frame (With High Lift Arm)

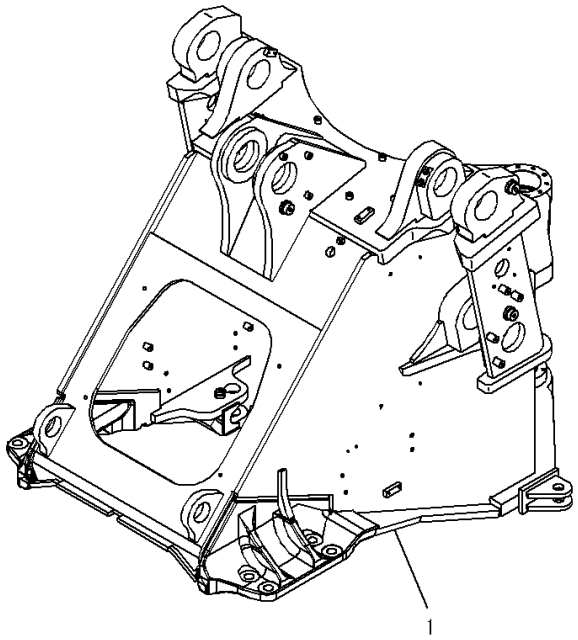

00050575

Index	Code	Part Number	Description	Qty	Serial Number
1		421-850-4142	Frame	1	90490-

FIG. J4110-013001 Front Frame (With Auto-greasing System)

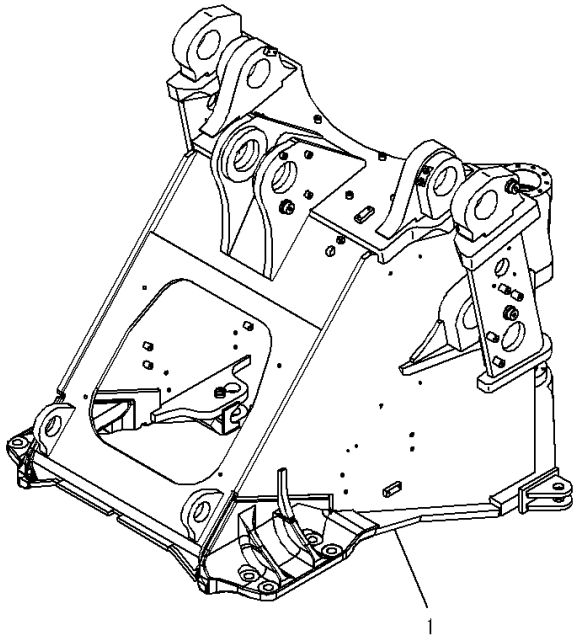

00050575

Index	Code	Part Number	Description	Qty	Serial Number
1		421-S95-7452	Frame	1	90490-

FIG. J4110-010001 Front Frame (With 3-Spool Control Valve)

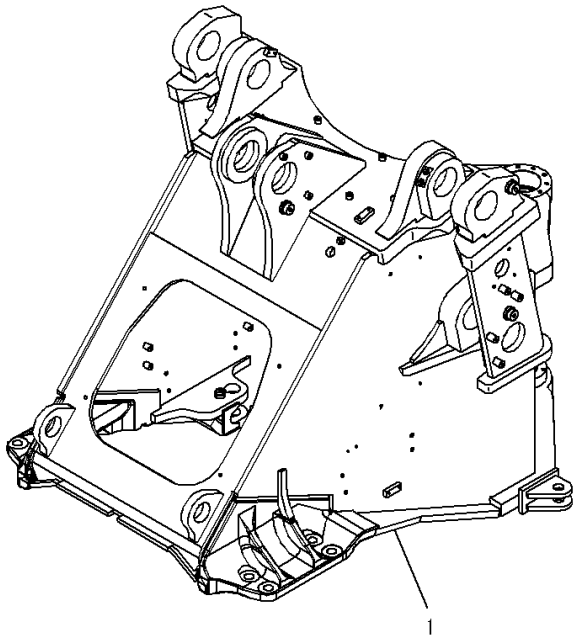

00050575

Index	Code	Part Number	Description	Qty	Serial Number
1		421-877-4712	Frame	1	90490-

FIG. J4110-014001 Front Frame (With Brake Oil Cooling System)

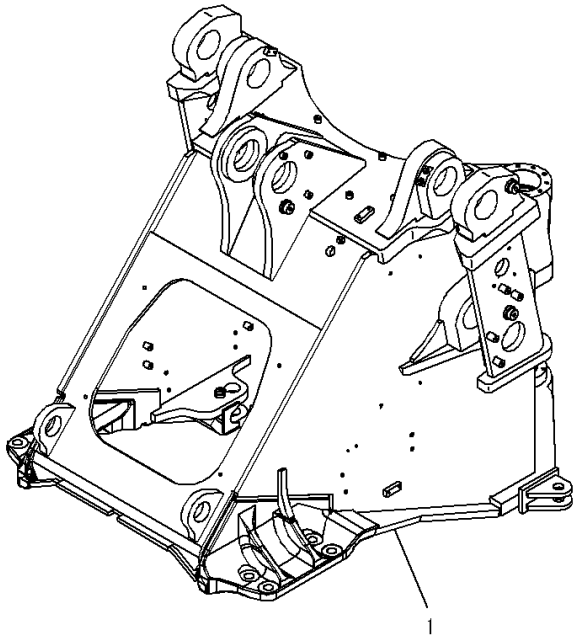

00050575

Index	Code	Part Number	Description	Qty	Serial Number
1		421-U44-4280	Frame	1	90216-

FIG. J4120-007001 Rear Frame

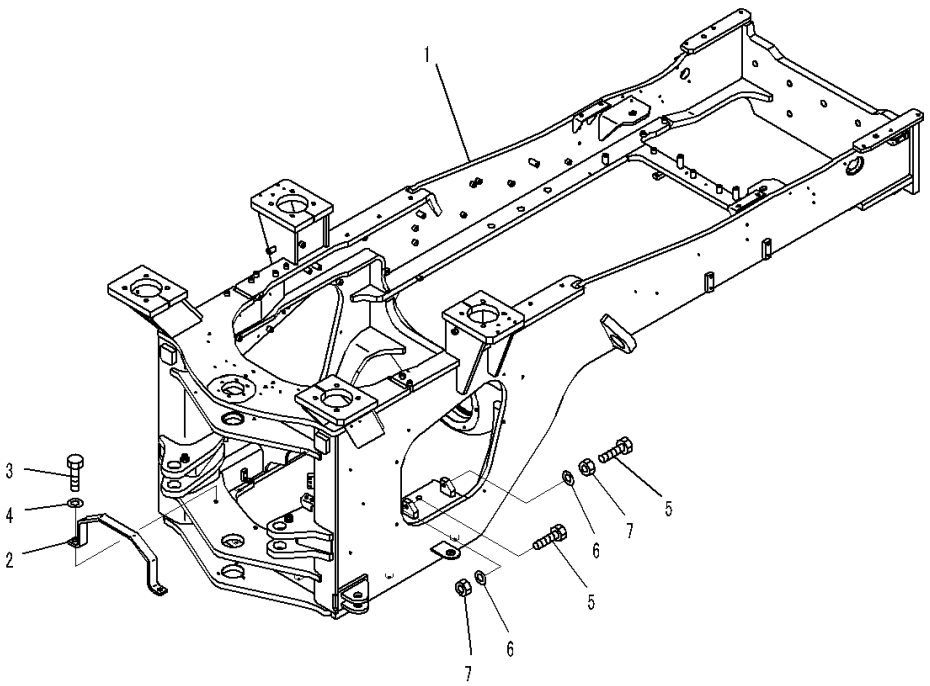

Index	Code	Part Number	Description	Qty	Serial Number
1		421-Z90-4711	Frame	1	90455-
2		421-46-42160	Guard	1	90216-
3		01010-81640	Bolt	2	90216-
4		01643-31645	Washer	2	90216-
5		01016-52080	Bolt	4	90216-
6		01643-32060	Washer	4	90216-
7		01580-12016	Nut	4	90216-

FIG. J4120-006001 Rear Frame (Without Power Train Guard)

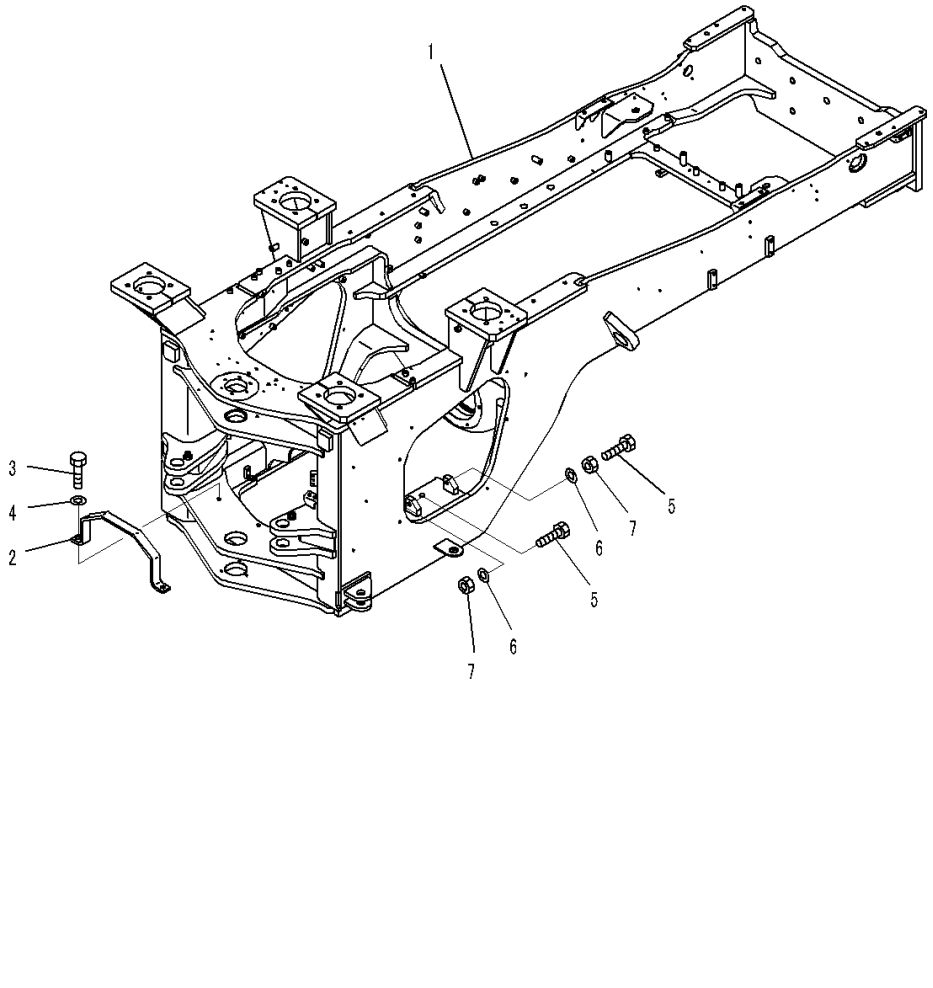

Index	Code	Part Number	Description	Qty	Serial Number
1		421-46-42301	Frame	1	90455-
2		421-46-42160	Guard	1	90216-
3		01010-81640	Bolt	2	90216-
4		01643-31645	Washer	2	90216-
5		01016-52080	Bolt	4	90216-
6		01643-32060	Washer	4	90216-
7		01580-12016	Nut	4	90216-

FIG. J4120-008001 Rear Frame (With Auto-greasing System)

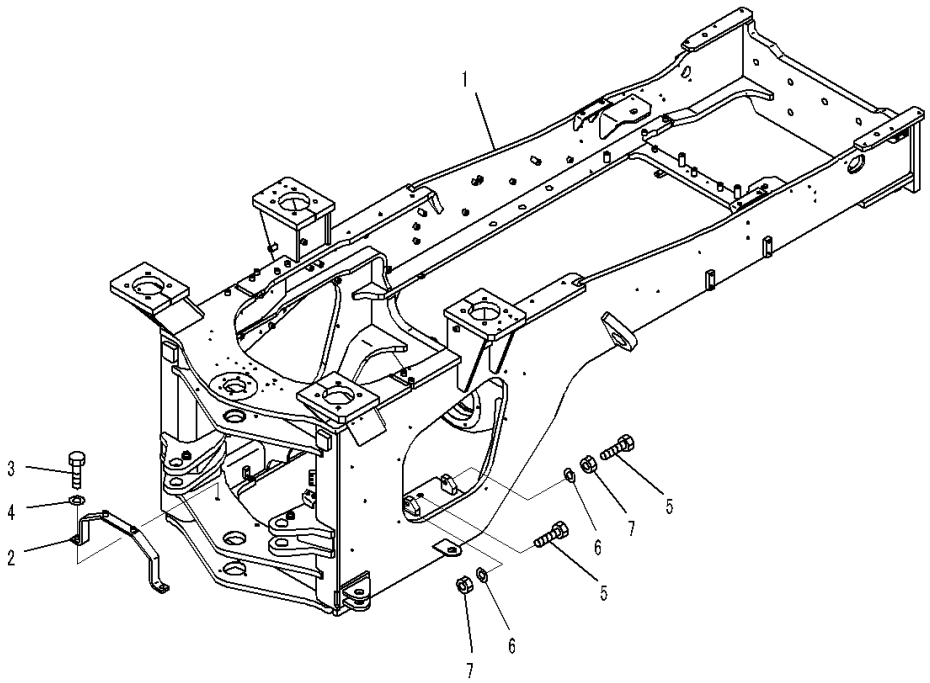

Index	Code	Part Number	Description	Qty	Serial Number
1		421-S95-7471	Frame	1	90455-
2		421-S95-7380	Plate	1	90216-
3		01010-81640	Bolt	2	90216-
4		01643-31645	Washer	2	90216-
5		01016-52080	Bolt	4	90216-
6		01643-32060	Washer	4	90216-
7		01580-12016	Nut	4	90216-

FIG. J4120-012001 Rear Frame (With Brake Oil Cooling System)

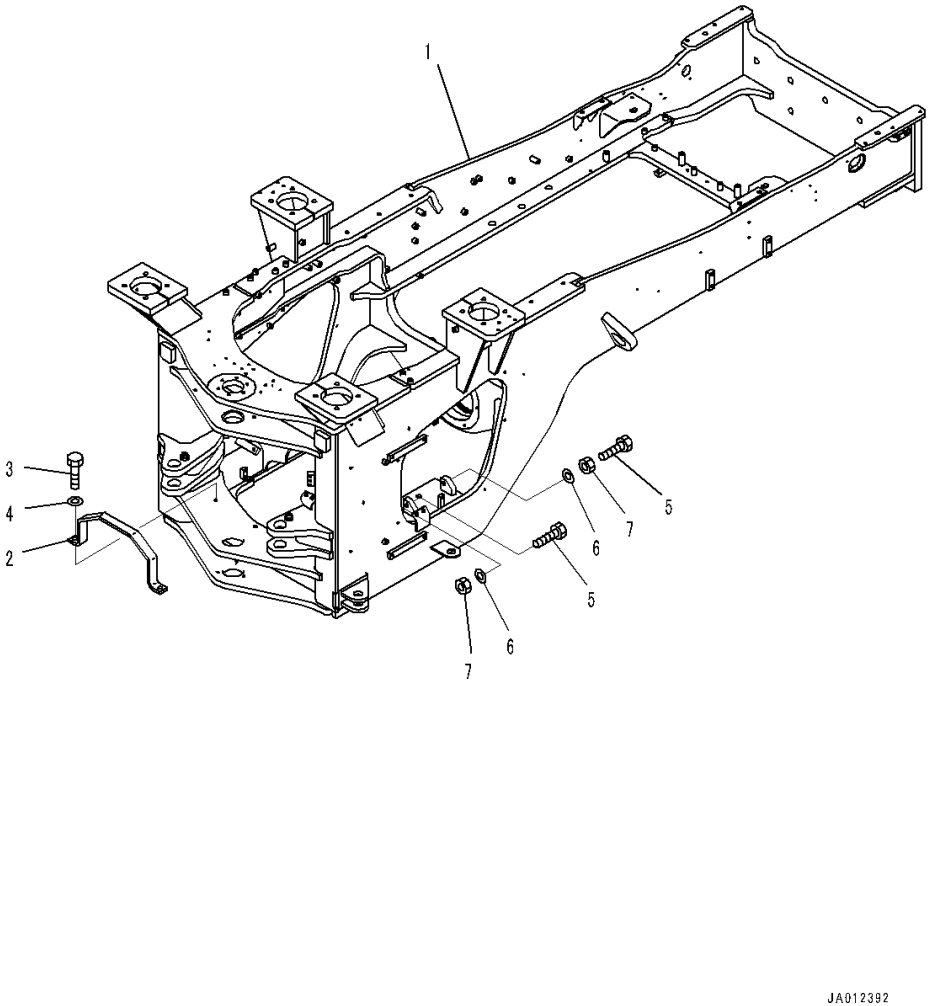

Index	Code	Part Number	Description	Qty	Serial Number
1		421-U45-4470	Frame	1	90216-
2		421-46-42160	Guard	1	90216-
3		01010-81640	Bolt	2	90216-
4		01643-31645	Washer	2	90216-
5		01016-52080	Bolt	4	90216-
6		01643-32060	Washer	4	90216-
7		01580-12016	Nut	4	90216-

FIG. J4120-010001 Rear Frame (With Brake Oil Cooling System, Without Power Train Guard)

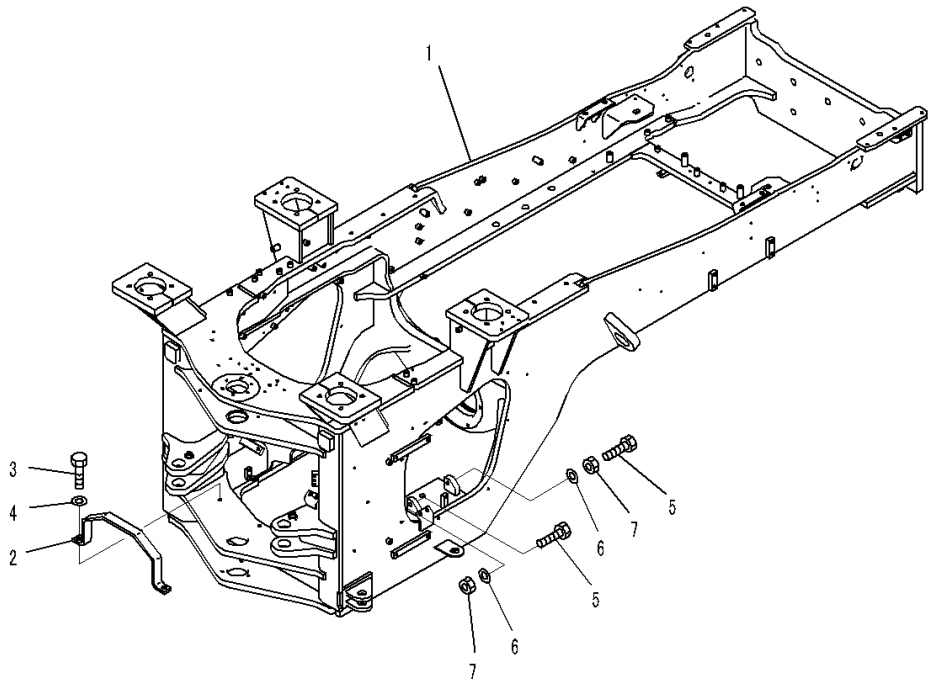

Index	Code	Part Number	Description	Qty	Serial Number
1		421-U44-4290	Frame	1	90216-
2		421-46-42160	Guard	1	90216-
3		01010-81640	Bolt	2	90216-
4		01643-31645	Washer	2	90216-
5		01016-52080	Bolt	4	90216-
6		01643-32060	Washer	4	90216-
7		01580-12016	Nut	4	90216-

FIG. J4130-002001 Hinge Pin

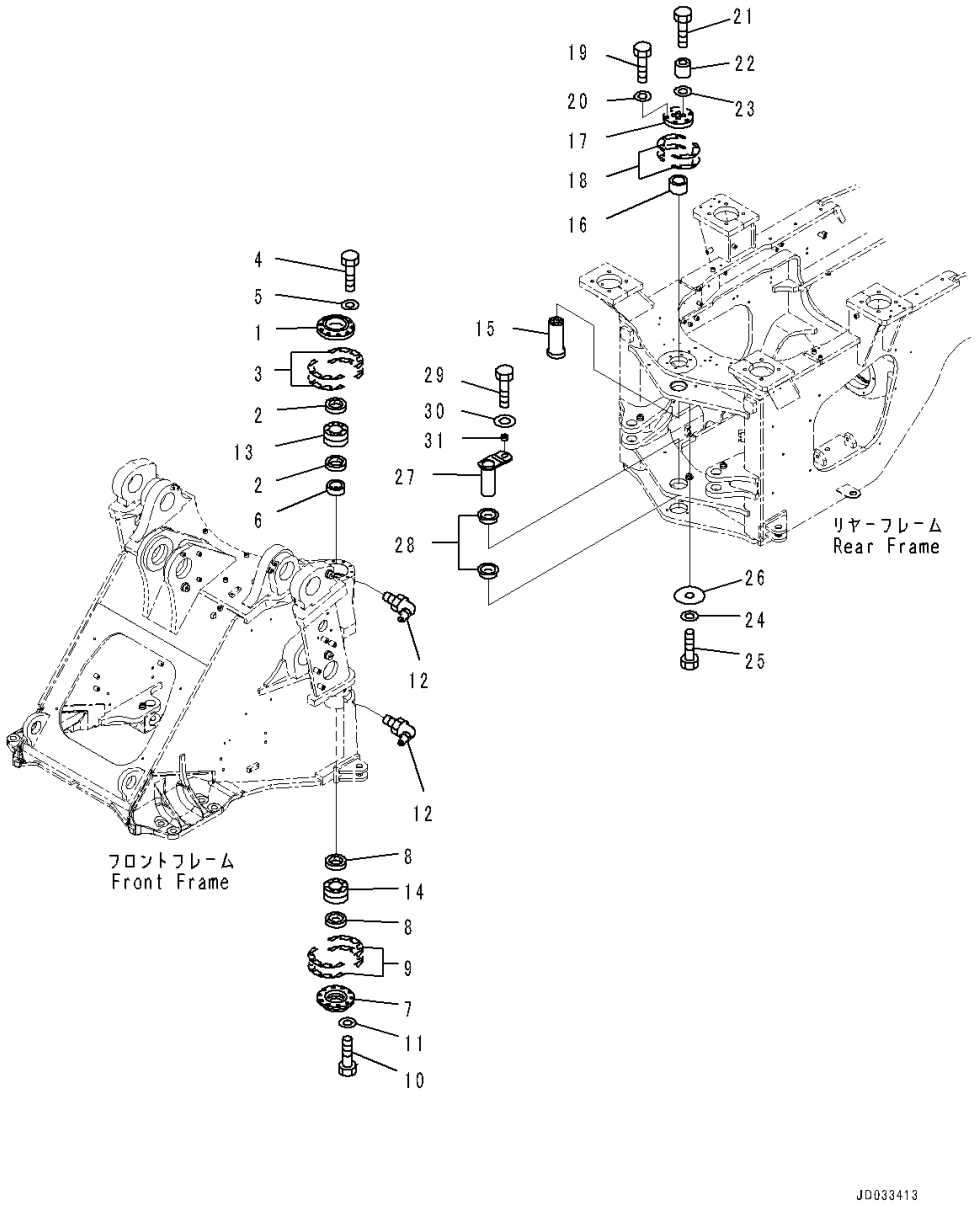

Index	Code	Part Number	Description	Qty	Serial Number
1		421-46-11710	Retainer	1	90216-
2		421-09-11310	Seal, Dust	2	90216-
3		421-46-11372	Shim, T=0.1mm	20	90216-
		421-46-11382	Shim, T=0.5mm	20	90216-
4		01010-81240	Bolt	10	90216-
5		01643-31232	Washer	10	90216-
6		421-46-11741	Spacer	1	90216-
7		421-46-11470	Retainer	1	90216-
8		07011-00080	Seal, Oil	2	90216-
9		421-46-11372	Shim, T=0.1mm	20	90216-
		421-46-11382	Shim, T=0.5mm	20	90216-
10		01010-81235	Bolt	10	90216-
11		01643-31232	Washer	10	90216-
12		419-09-11250	Fitting	2	90216-
13		421-46-11361	Bearing	1	90216-
14		421-46-11361	Bearing	1	90216-
15		421-46-41720	Pin	1	90216-
16		421-46-11730	Spacer	1	90216-
17		421-46-11421	Cover	1	90216-
18		421-46-11431	Shim, T=0.2mm	10	90216-
		421-46-11441	Shim, T=0.5mm	8	90216-
		421-46-11451	Shim, T=1.0mm	4	90216-
19		01010-81250	Bolt	6	90216-
20		01643-31232	Washer	6	90216-
21		421-46-43110	Bolt	4	90216-
22		423-46-41430	Spacer	4	90216-
23		01643-31645	Washer	4	90216-
24		01643-31645	Washer	1	90216-
25		01010-61630	Bolt	1	90216-
26		419-70-11340	Plate	1	90216-
27		421-46-41461	Pin	1	90216-
28		423-46-42330	Bushing	2	90216-
29		01010-81640	Bolt	1	90216-
30		421-70-11280	Washer	1	90216-
31		421-46-41480	Collar	1	90216-

FIG. J4140-003001 Steering Cylinder (L.H.)

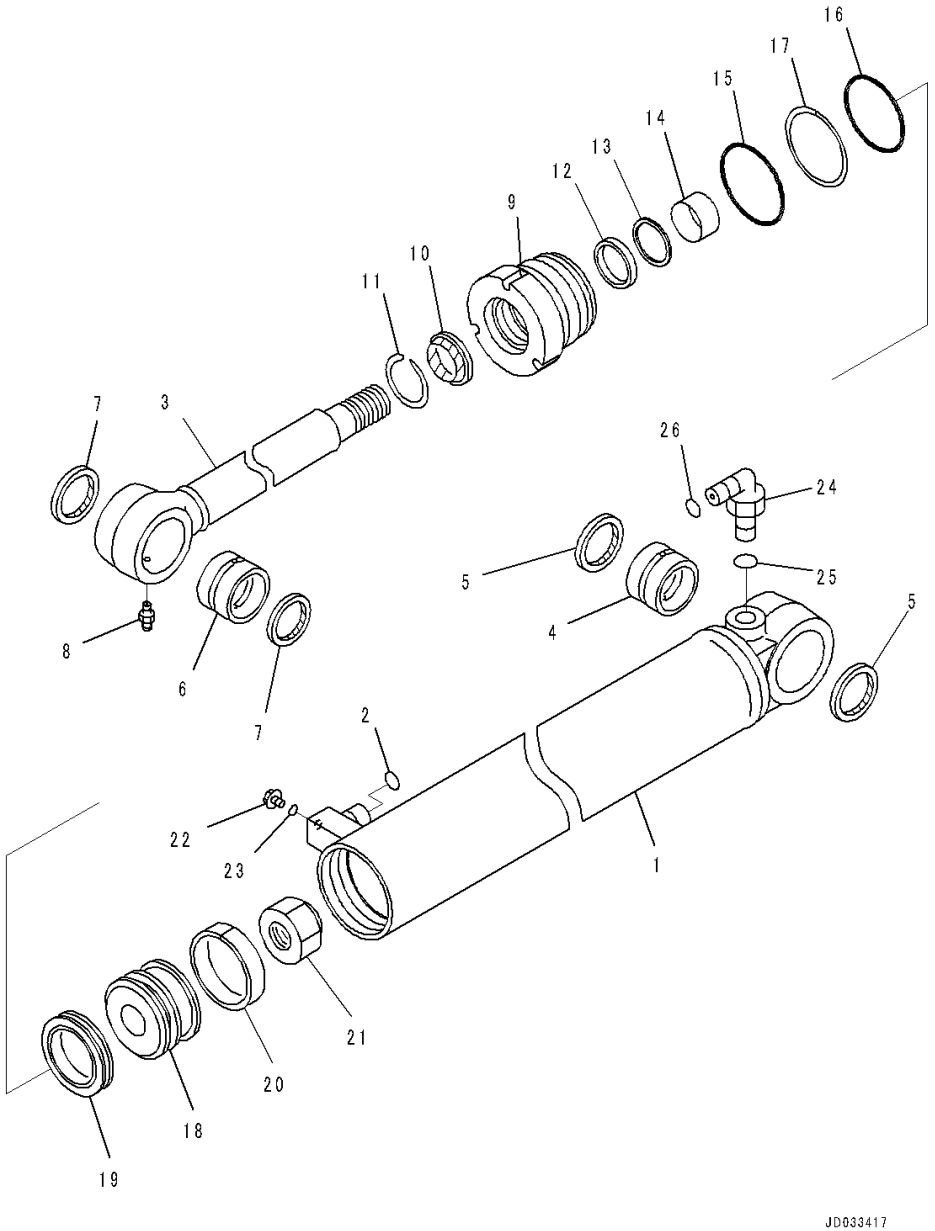

Index	Code	Part Number	Description	Qty	Serial Number
		707-00-0G760	Cylinder Assembly	1	90216-
1		721-11-90750	• Cylinder	1	90216-
2		02896-11015	• O-ring, (Kit : K09)	1	90216-
3		707-58-50J50	• Rod, Piston	1	90216-
4		707-76-55520	• Bushing	1	90216-
5		416-09-11130	• Seal, Dust, (Kit : K09)	2	90216-
6		707-76-55120	• Bushing	1	90216-
7		416-09-11130	• Seal, Dust, (Kit : K09)	2	90216-
8		07020-00000	• Fitting, Grease	1	90216-
9		707-29-90651	• Head	1	90216-
10		707-56-50740	• Seal, Dust, (Kit : K09)	1	90216-
11		07179-12062	• Ring, Snap	1	90216-
12		707-51-50030	• Packing, Rod, (Kit : K09)	1	90216-
13		707-51-50640	• Ring, Buffer, (Kit : K09)	1	90216-
14		707-52-90251	• Bushing	1	90216-
15		07000-12090	• O-ring, (Kit : K09)	1	90216-
16		07000-12085	• O-ring, (Kit : K09)	1	90216-
17		07146-02086	• Ring, Back-up, (Kit : K09)	1	90216-
18		707-36-90260	• Piston	1	90216-
19		707-44-90150	• Ring, Piston, (Kit : K09)	1	90216-
20		07156-00912	• Ring, Wear, (Kit : K09)	1	90216-
21		707-67-36010	• Nut	1	90216-
22		708-8E-16150	Plug	1	90216-
23		07002-11023	O-ring, (Kit : K09)	1	90216-
24		02782-10522	Elbow	1	90216-
25		07002-12434	O-ring, (Kit : K09)	1	90216-
26		02896-11015	O-ring, (Kit : K09)	1	90216-

FIG. J4140-003002 Steering Cylinder (R.H.)

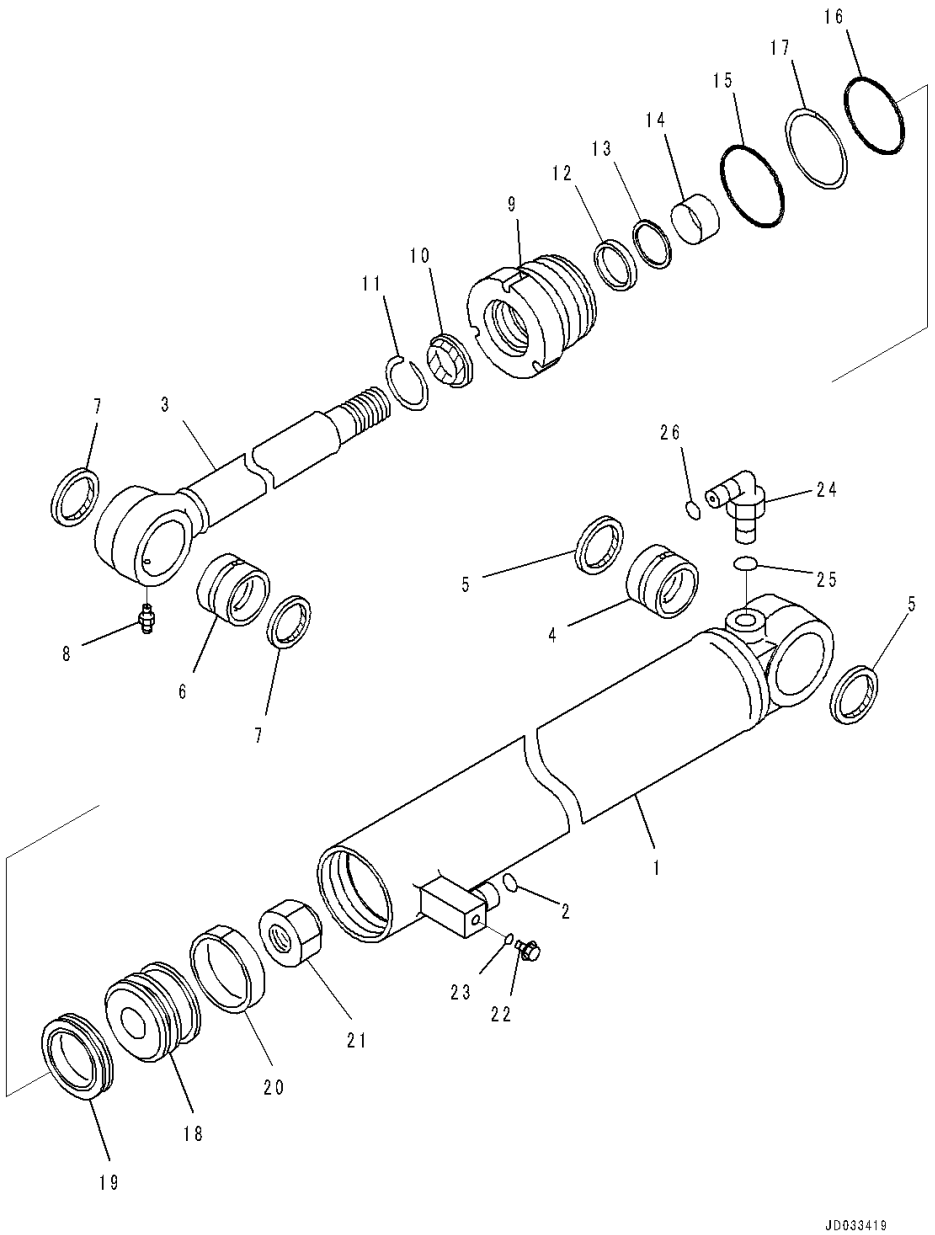

Index	Code	Part Number	Description	Qty	Serial Number
		707-00-0G770	Cylinder Assembly	1	90216-
1		721-11-90760	• Cylinder	1	90216-
2		02896-11015	• O-ring, (Kit : K09)	1	90216-
3		707-58-50J50	• Rod, Piston	1	90216-
4		707-76-55520	• Bushing	1	90216-
5		416-09-11130	• Seal, Dust, (Kit : K09)	2	90216-
6		707-76-55120	• Bushing	1	90216-
7		416-09-11130	• Seal, Dust, (Kit : K09)	2	90216-
8		07020-00000	• Fitting, Grease	1	90216-
9		707-29-90651	• Head	1	90216-
10		707-56-50740	• Seal, Dust, (Kit : K09)	1	90216-
11		07179-12062	• Ring, Snap	1	90216-
12		707-51-50030	• Packing, Rod, (Kit : K09)	1	90216-
13		707-51-50640	• Ring, Buffer, (Kit : K09)	1	90216-
14		707-52-90251	• Bushing	1	90216-
15		07000-12090	• O-ring, (Kit : K09)	1	90216-
16		07000-12085	• O-ring, (Kit : K09)	1	90216-
17		07146-02086	• Ring, Back-up, (Kit : K09)	1	90216-
18		707-36-90260	• Piston	1	90216-
19		707-44-90150	• Ring, Piston, (Kit : K09)	1	90216-
20		07156-00912	• Ring, Wear, (Kit : K09)	1	90216-
21		707-67-36010	• Nut	1	90216-
22		708-8E-16150	Plug	1	90216-
23		07002-11023	O-ring, (Kit : K09)	1	90216-
24		02782-10522	Elbow	1	90216-
25		07002-12434	O-ring, (Kit : K09)	1	90216-
26		02896-11015	O-ring, (Kit : K09)	1	90216-

FIG. J4140-003003 Steering Cylinder (Steering Cylinder Piping)

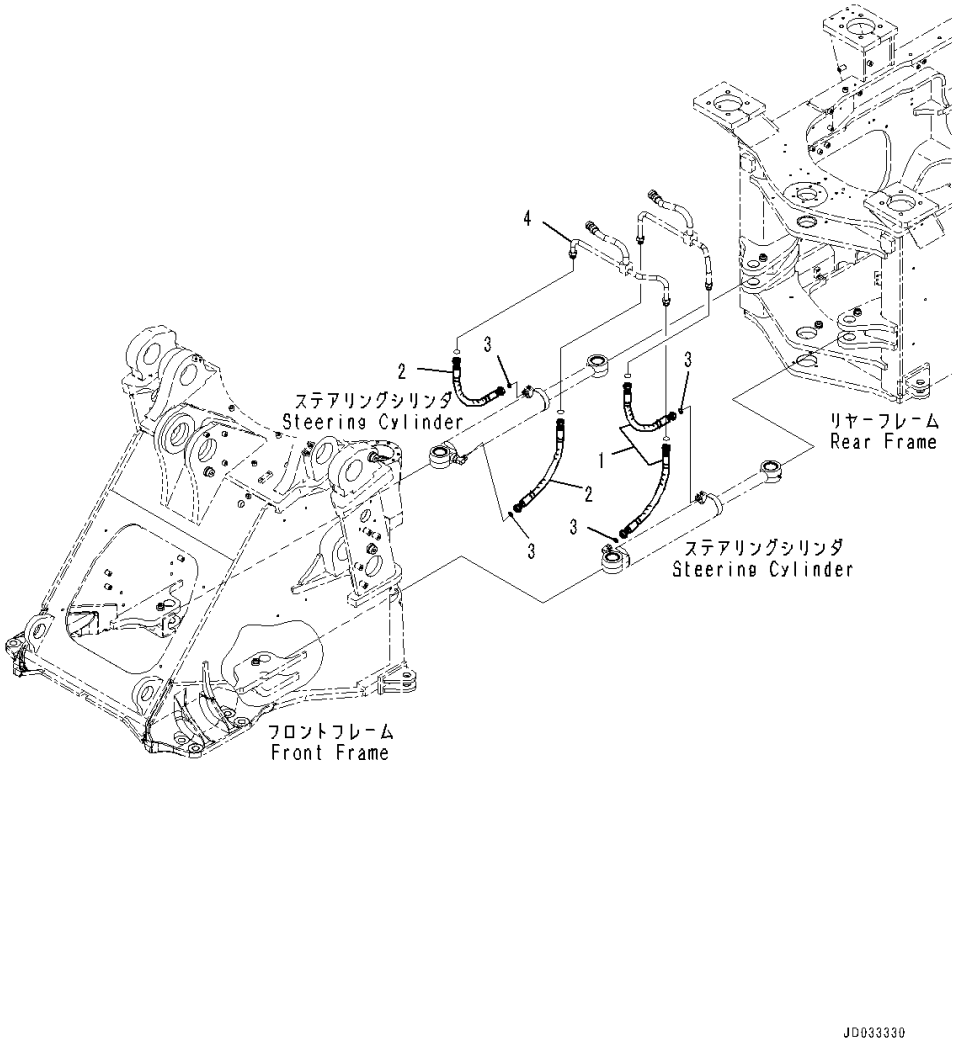

Index	Code	Part Number	Description	Qty	Serial Number
1		02756-00505	Hose, Face Seal Type	2	90216-
2		02756-00505	Hose, Face Seal Type	2	90216-
3		02896-11015	O-ring	4	90216-
4		(421-62-42370)	Tube(Refer to Page 463)		-

FIG. J4140-003004 Steering Cylinder (Pin)

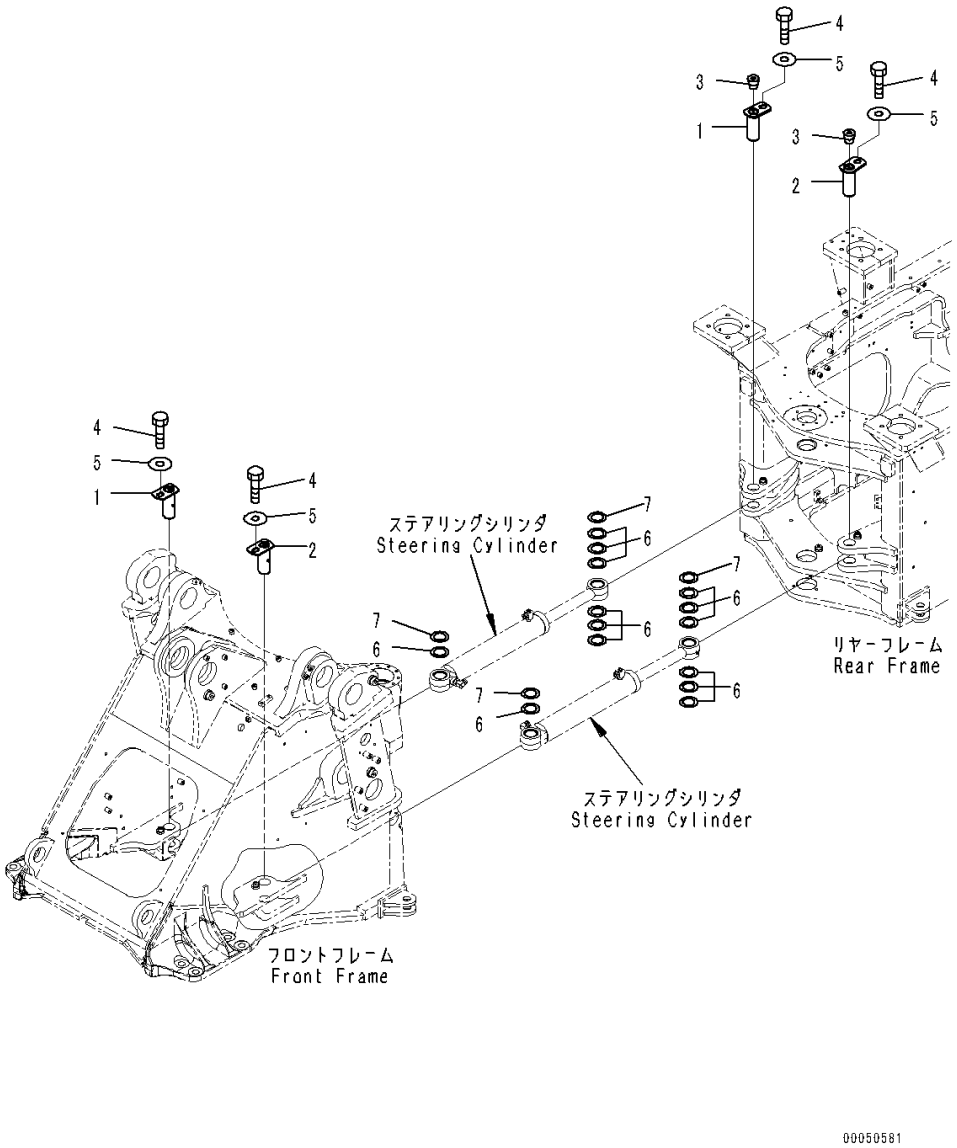

Index	Code	Part Number	Description	Qty	Serial Number
1		421-46-21760	Pin	2	90216-
2		421-46-21760	Pin	2	90216-
3		07043-A0108	Plug	2	90216-
4		01010-81220	Bolt	4	90216-
5		175-54-34170	Washer	4	90216-
6		421-46-11771	Shim, T=1.0mm	14	90216-
7		421-46-11781	Shim, T=0.5mm	4	90216-

FIG. J4190-016001 Articulate Lock Bar and Frame Cover (Front Cover)

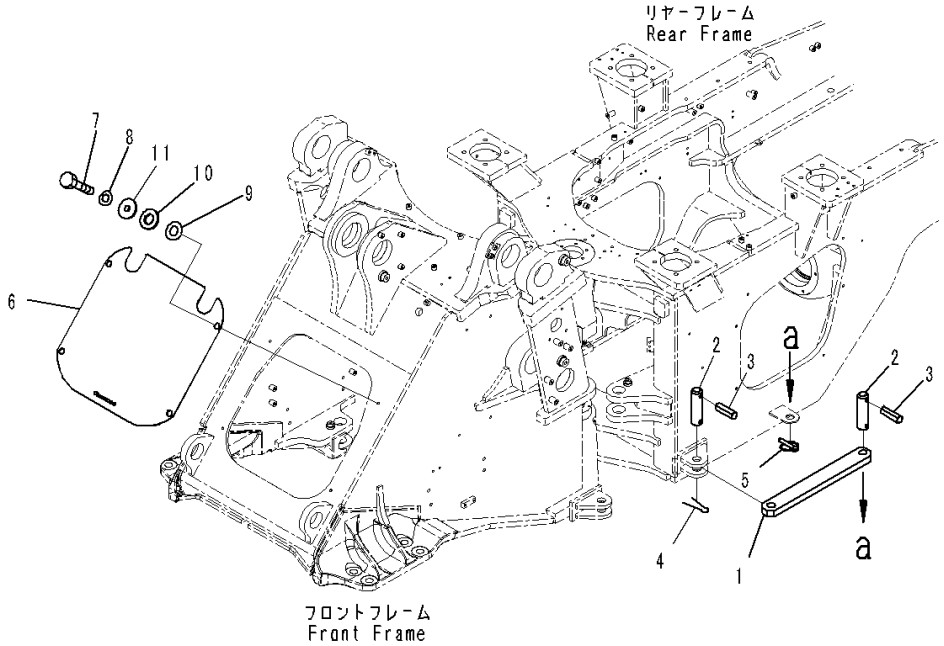

Index	Code	Part Number	Description	Qty	Serial Number
		Note: This list covers following specifications.			
		With 2-Spool Control Valve			
		With 2-Spool Control Valve, Auto-greasing System			
		With 2-Spool Control Valve, Brake Oil Cooling System			
		With 2-Spool Control Valve, Power Train Guard			
		With 2-Spool Control Valve, For EU New Noise Arrangement 2			
1		421-46-12920	Bar, Lock	1	90216-
2		421-46-12721	Pin	2	90216-
3		04025-01065	• Pin, Spring	1	90216-
4		04050-10060	Pin, Cotter	1	90216-
5		421-46-12740	Pin, Linch	1	90216-
6		421-46-44110	Cover	1	90216-
7		01010-D1235	Bolt	4	90216-
8		01643-71232	Washer	4	90216-
9		01640-22232	Washer, Flat	4	90216-
10		415-46-11380	Rubber	4	90216-
11		421-46-34420	Collar	4	90216-

FIG. J4190-016002 Articulate Lock Bar and Frame Cover (Side Cover)

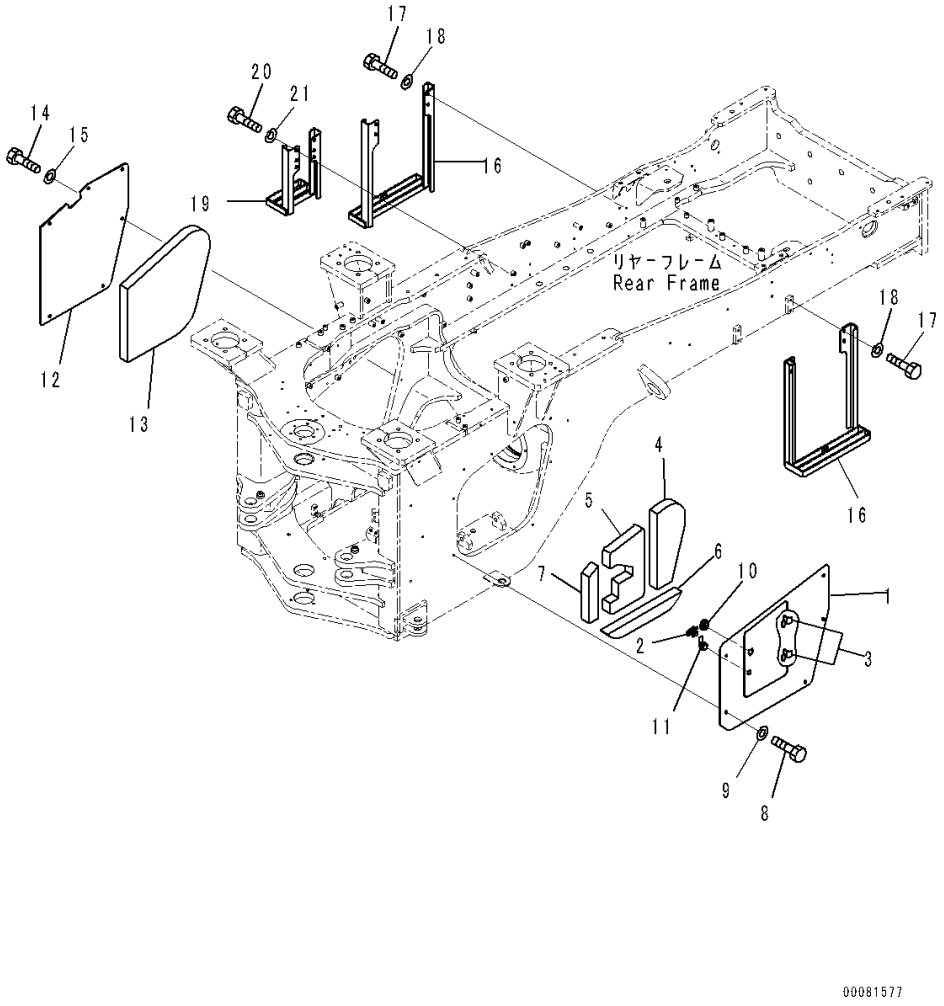

Index	Code	Part Number	Description	Qty	Serial Number
		Note: This list covers following specifications.			
		With 2-Spool Control Valve			
		With 2-Spool Control Valve, Brake Oil Cooling System			
		With 2-Spool Control Valve, Power Train Guard			
		With 2-Spool Control Valve, For EU New Noise Arrangement 2			
		With 3-Spool Control Valve			
		With 3-Spool Control Valve, Power Train Guard			
		With 3-Spool Control Valve, For EU New Noise Arrangement 2			
		421-46-44380	Cover	1	90216-
1	C1		• Cover	1	90216-
2		22M-54-19170	• • Stopper	1	90216-
3		421-06-24180	• • Hinge	2	90216-
4		421-46-44310	• Sheet	1	90216-
5		421-46-44320	• Sheet	1	90216-
6		421-46-44340	• Sheet	1	90216-
7		421-46-44350	• Sheet	1	90216-
8		01010-D1220	Bolt	5	90216-
9		01643-71232	Washer	5	90216-
10		08037-02512	Grommet	1	90216-
11		205-60-71220	Lock Assembly	1	90216-
		421-46-44440	Cover	1	90216-
12	C1		• Cover	1	90216-
13		421-46-44460	• Sheet	1	90216-
14		01010-D1220	Bolt	6	90216-
15		01643-71232	Washer	6	90216-
16		421-54-44610	Step	2	90216-
17		01010-D1225	Bolt	8	90216-
18		01643-71232	Washer	8	90216-
19		421-54-44620	Step	1	90216-
20		01010-D1225	Bolt	4	90216-
21		01643-71232	Washer	4	90216-

FIG. J4190-016003 Articulate Lock Bar and Frame Cover (Bolt)

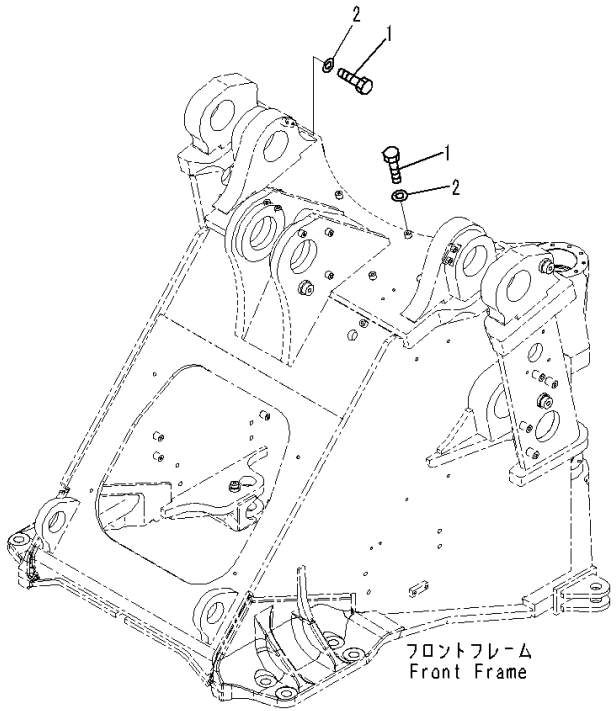

JD033443

Index	Code	Part Number	Description	Qty	Serial Number
		Note: This list covers following specifications.			
		With 2-Spool Control Valve			
		With 2-Spool Control Valve, Auto-greasing System			
		With 2-Spool Control Valve, Brake Oil Cooling System			
		With 2-Spool Control Valve, Power Train Guard			
		With 2-Spool Control Valve, For EU New Noise Arrangement 2			
		With 3-Spool Control Valve			
		With 3-Spool Control Valve, Power Train Guard			
		With 3-Spool Control Valve, Auto-greasing System			
		With 3-Spool Control Valve, For EU New Noise Arrangement 2			
1		01010-D1016	Bolt	7	90216-
2		01643-71032	Washer	7	90216-

FIG. J4190-016004 Articulate Lock Bar and Frame Cover (Tool Box)

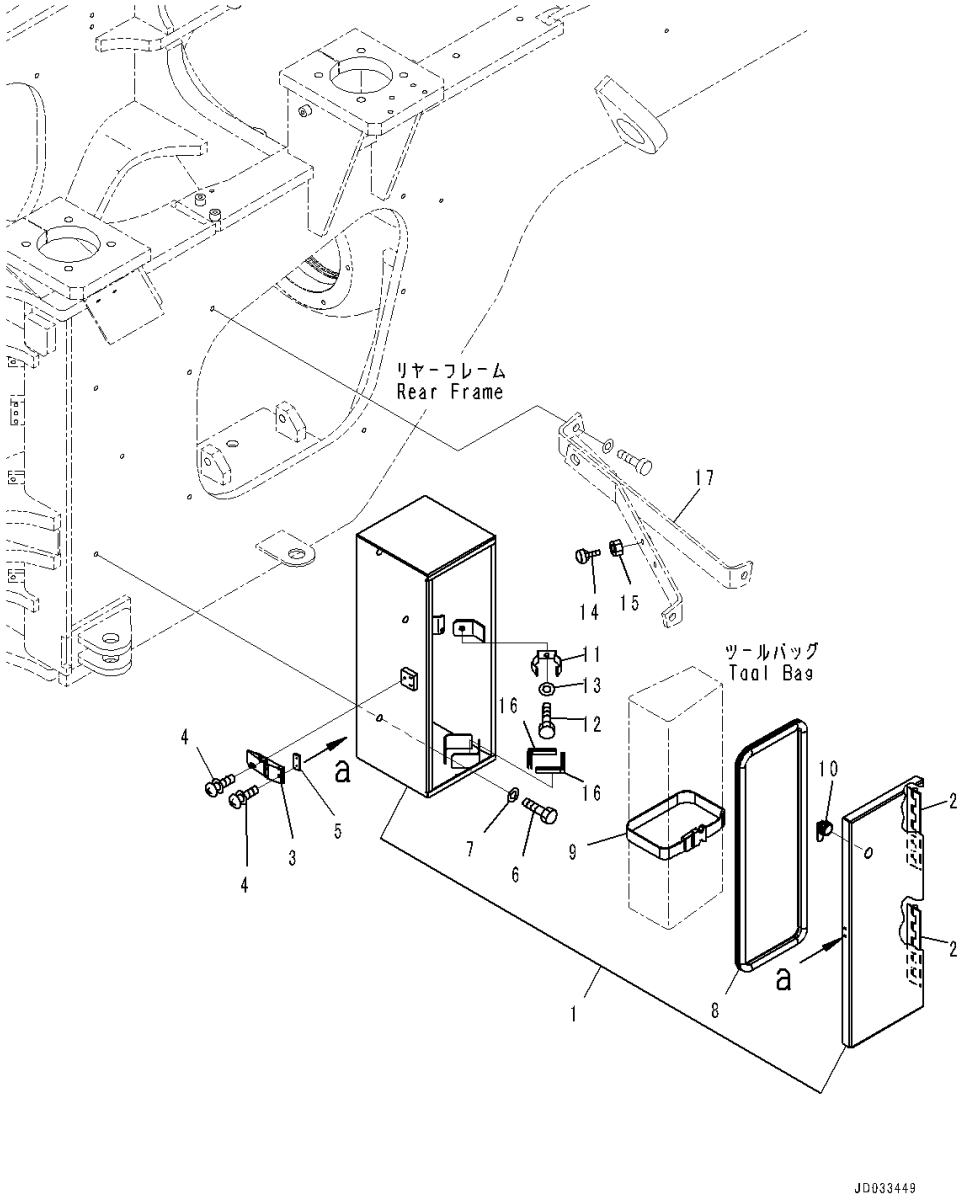

Index	Code	Part Number	Description	Qty	Serial Number
		Note: This list covers following specifications.			
		With 2-Spool Control Valve			
		With 2-Spool Control Valve, Auto-greasing System			
		With 2-Spool Control Valve, Brake Oil Cooling System			
		With 2-Spool Control Valve, Power Train Guard			
		With 2-Spool Control Valve, For EU New Noise Arrangement 2			
		With 3-Spool Control Valve			
		With 3-Spool Control Valve, Power Train Guard			
		With 3-Spool Control Valve, Auto-greasing System			
		With 3-Spool Control Valve, For EU New Noise Arrangement 2			
1		421-46-44391	Box, Tool	1	90216-
2		424-54-14120	• Hinge	2	90216-
3		421-09-12322	Holder	1	90216-
4		01023-70412	Screw	5	90216-
5		419-09-11440	Plate	1	90216-
6		01010-81235	Bolt	3	90216-
7		01643-31232	Washer	3	90216-
8		424-46-44320	Seal	1	90216-
9		423-54-42790	Band	1	90216-
10		205-60-71220	Lock Assembly	1	90216-
11		417-54-21460	Spring	1	90216-
12		01010-80816	Bolt	1	90216-
13		01643-30823	Washer	1	90216-
14		203-54-63830	Stopper	1	90216-
15		01580-11008	Nut	1	90216-
16		421-46-44410	Finisher	2	90216-
17		(424-54-44964)	Bracket(Refer to Page 769)		-

FIG. J4190-022002 Articulate Lock Bar and Frame Cover (Side Cover)

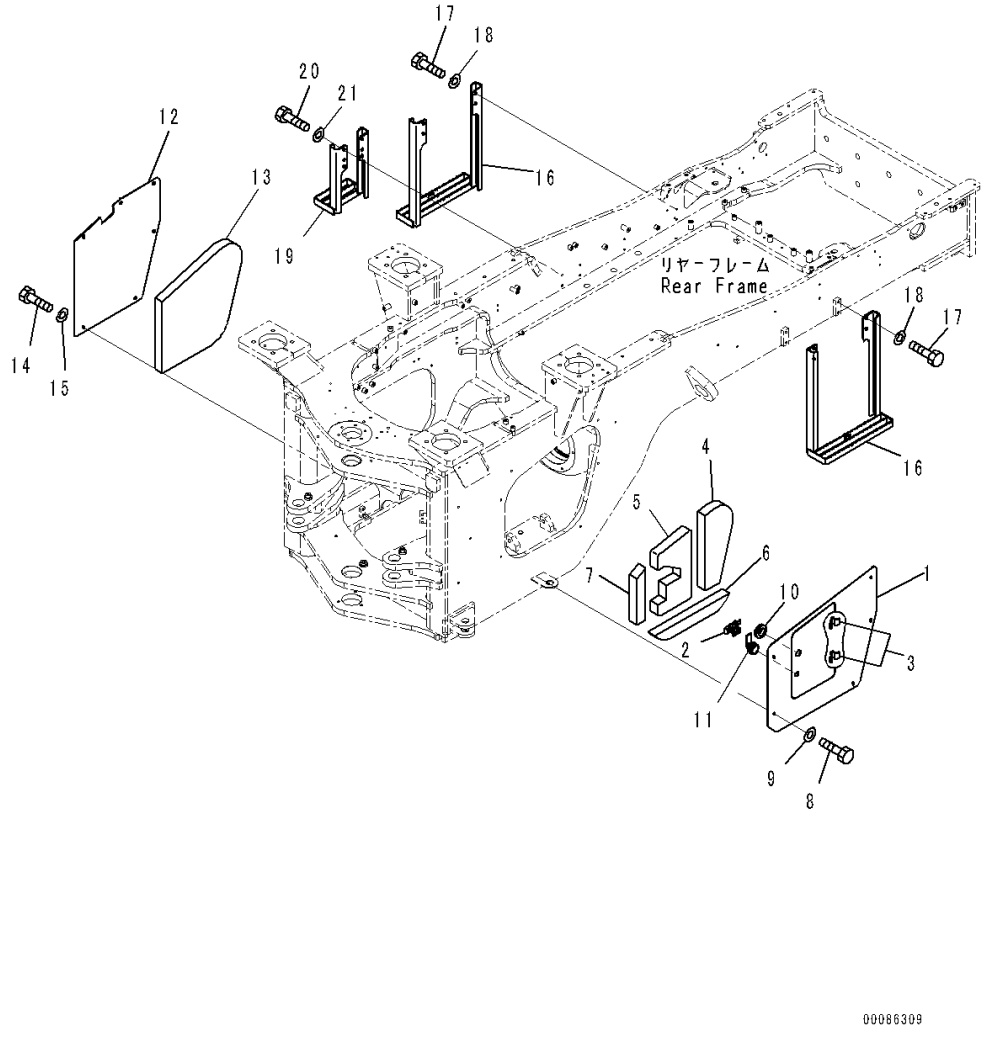

Index	Code	Part Number	Description	Qty	Serial Number
		Note: This list covers following specifications.			
		With 2-Spool Control Valve, Auto-greasing System			
		With 3-Spool Control Valve, Auto-greasing System			
		421-46-44380	Cover	1	90216-
1	C1		• Cover	1	90216-
2		22M-54-19170	• • Stopper	1	90216-
3		421-06-24180	• • Hinge	2	90216-
4		421-46-44310	• Sheet	1	90216-
5		421-46-44320	• Sheet	1	90216-
6		421-46-44340	• Sheet	1	90216-
7		421-46-44350	• Sheet	1	90216-
8		01010-D1220	Bolt	5	90216-
9		01643-71232	Washer	5	90216-
10		08037-02512	Grommet	1	90216-
11		205-60-71220	Lock Assembly	1	90216-
		421-46-44440	Cover	1	90216-
12	C1		• Cover	1	90216-
13		421-46-44460	• Sheet	1	90216-
14		01010-D1220	Bolt	6	90216-
15		01643-71232	Washer	6	90216-
16		421-54-44610	Step	2	90216-
17		01010-D1225	Bolt	8	90216-
18		01643-71232	Washer	8	90216-
19		421-54-44620	Step	1	90216-
20		01010-D1225	Bolt	4	90216-
21		01643-71232	Washer	4	90216-

FIG. J4190-022005A Articulate Lock Bar and Frame Cover (Transmission Under Cover)

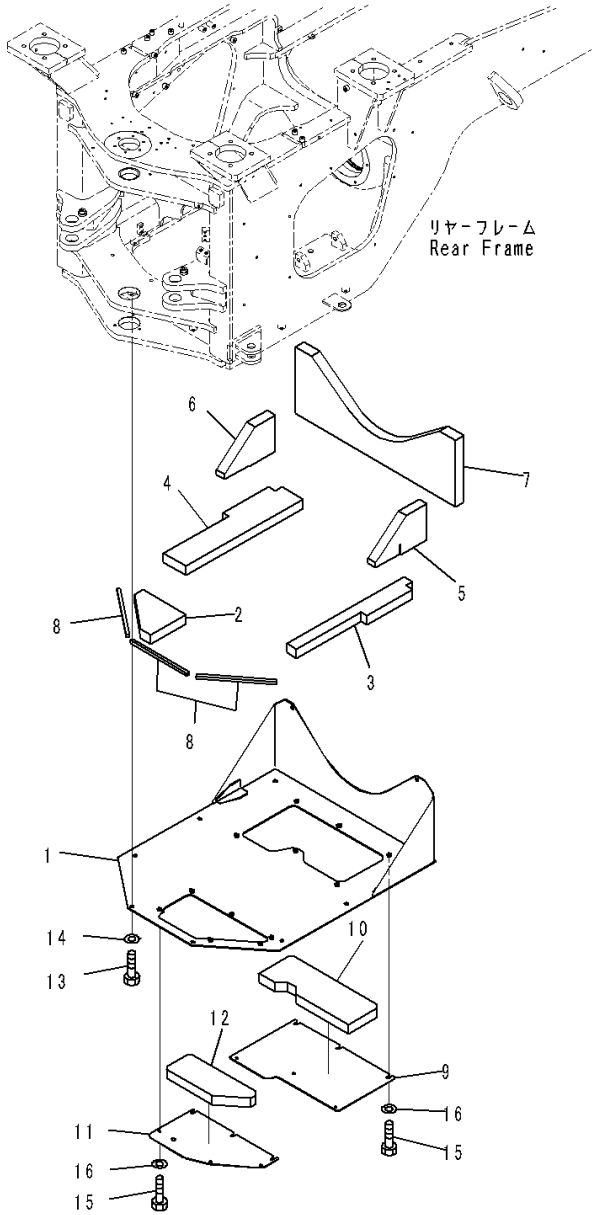

Index	Code	Part Number	Description	Qty	Serial Number
		Note: This list covers following specifications.			
		With 2-Spool Control Valve, Auto-greasing System			
		With 2-Spool Control Valve, Brake Oil Cooling System			
		With 2-Spool Control Valve, For EU New Noise Arrangement 2			
		With 3-Spool Control Valve, Auto-greasing System			
		With 3-Spool Control Valve, For EU New Noise Arrangement 2			
		421-46-44170	Guard	1	90216-
1	C1		• Guard	1	90216-
2		421-Z84-4970	• Sheet	1	90216-
3		421-Z84-4960	• Sheet	1	90216-
4		421-Z84-4930	• Sheet	1	90216-
5		421-Z84-4470	• Sheet	1	90216-
6		421-Z84-4460	• Sheet	1	90216-
7		421-Z84-4420	• Sheet	1	90216-
8		421-46-45170	• Sheet	3	90216-
		421-46-44431	Plate	1	90832-
9	C1		• Plate	1	90216-
10		421-Z84-4991	• Sheet	1	90832-
		421-46-44640	Cover	1	90216-
11	C1		• Plate	1	90216-
12		421-Z84-4980	• Sheet	1	90216-
13		01010-D1220	Bolt	8	90216-
14		01643-71232	Washer	8	90216-
15		01010-D1020	Bolt	12	90216-
16		01643-71032	Washer	12	90216-

FIG. J4190-022006 Articulate Lock Bar and Frame Cover (With 2-Spool Control Valve, Auto-greasing System) (Sheet)

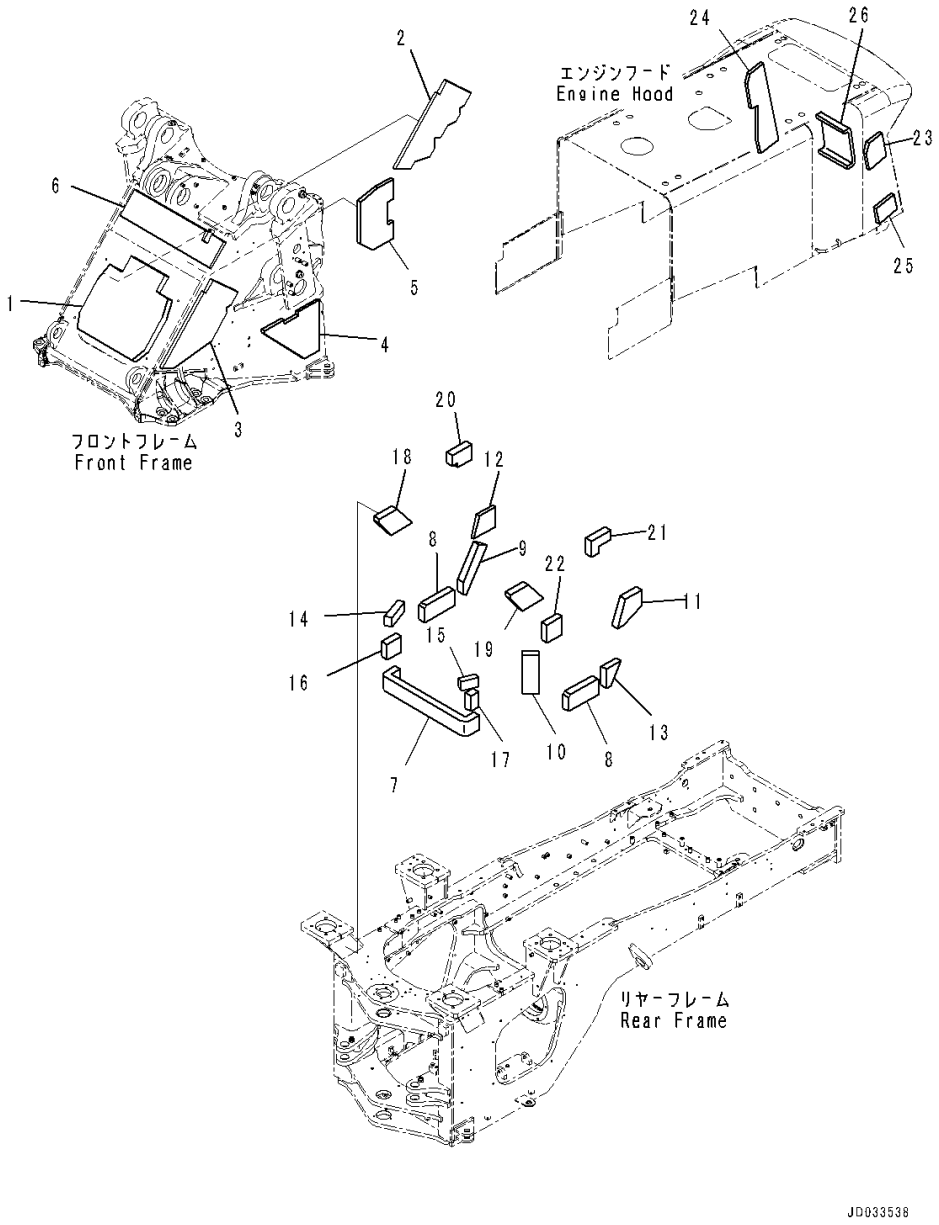

Index	Code	Part Number	Description	Qty	Serial Number
1		421-Z84-4110	Sheet	1	90216-
2		421-Z84-4130	Sheet	1	90216-
3		421-Z84-4120	Sheet	1	90216-
4		421-Z84-4150	Sheet	1	90216-
5		421-Z84-4610	Sheet	1	90216-
6		421-Z84-4140	Sheet	1	90216-
7		421-Z84-4530	Sheet	1	90216-
8		421-Z84-4180	Sheet	2	90216-
9		421-Z84-4210	Sheet	1	90216-
10		421-S95-7430	Sheet	1	90216-
11		421-Z84-4240	Sheet	1	90216-
12		421-Z84-4270	Sheet	1	90216-
13		421-Z84-4260	Sheet	1	90216-
14		421-Z84-4290	Sheet	1	90216-
15		421-Z84-4760	Sheet	1	90216-
16		421-Z84-4300	Sheet	1	90216-
17		421-Z84-4770	Sheet	1	90216-
18		421-Z84-4330	Sheet	1	90216-
19		421-Z84-4340	Sheet	1	90216-
20		421-Z84-4351	Sheet	1	90216-
21		421-Z84-4730	Sheet	1	90216-
22		421-Z84-4590	Sheet	1	90216-
23		421-Z84-4710	Sheet	1	90216-
24		421-Z84-4720	Sheet	1	90216-
25		421-Z84-4740	Sheet	1	90216-
26		421-Z84-4411	Sheet	1	90216-

FIG. J4190-028006 Articulate Lock Bar and Frame Cover (With 2-Spool Control Valve, Brake Oil Cooling System) (Sheet)

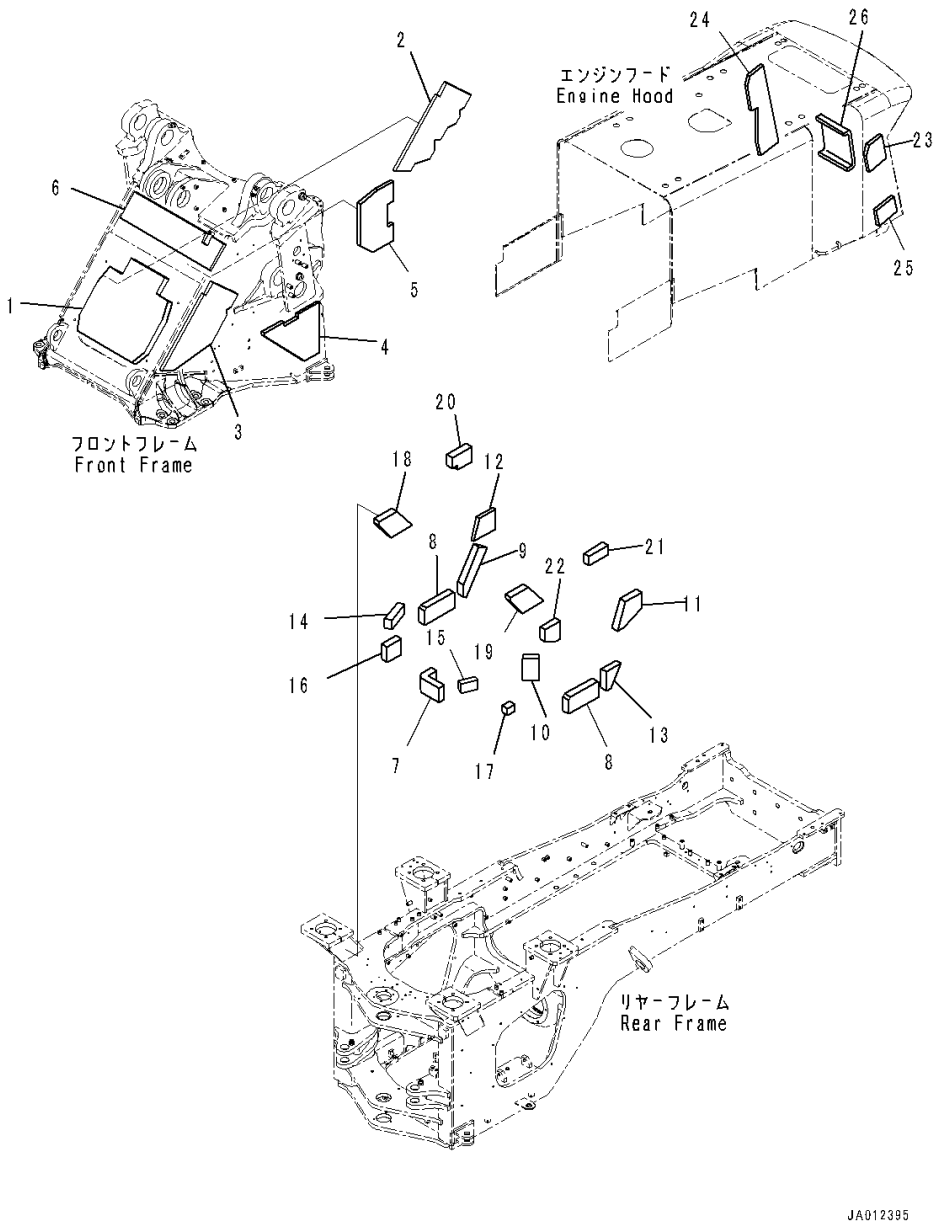

Index	Code	Part Number	Description	Qty	Serial Number
1		421-Z84-4110	Sheet	1	90216-
2		421-Z84-4130	Sheet	1	90216-
3		421-Z84-4120	Sheet	1	90216-
4		421-Z84-4150	Sheet	1	90216-
5		421-Z84-4610	Sheet	1	90216-
6		421-Z84-4140	Sheet	1	90216-
7		421-U45-4420	Sheet	2	90216-
8		421-Z84-4180	Sheet	2	90216-
9		421-Z84-4210	Sheet	1	90216-
10		421-U45-4430	Sheet	1	90216-
11		421-Z84-4240	Sheet	1	90216-
12		421-Z84-4270	Sheet	1	90216-
13		421-Z84-4260	Sheet	1	90216-
14		421-Z84-4290	Sheet	1	90216-
15		421-Z84-4760	Sheet	1	90216-
16		421-Z84-4300	Sheet	1	90216-
17		421-U45-4440	Sheet	1	90216-
18		421-Z84-4330	Sheet	1	90216-
19		421-Z84-4340	Sheet	1	90216-
20		421-Z84-4351	Sheet	1	90216-
21		421-U45-4460	Sheet	1	90216-
22		421-U45-4450	Sheet	1	90216-
23		421-Z84-4710	Sheet	1	90216-
24		421-Z84-4720	Sheet	1	90216-
25		421-Z84-4740	Sheet	1	90216-
26		421-Z84-4411	Sheet	1	90216-

FIG. J4190-021005 Articulate Lock Bar and Frame Cover (Transmission Under Cover)

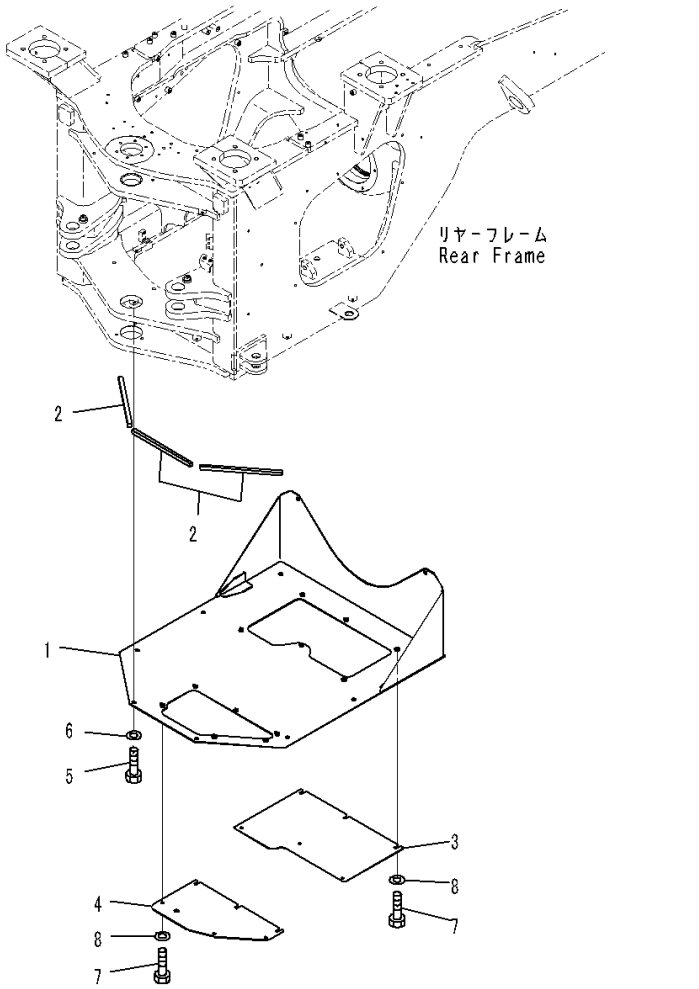

Index	Code	Part Number	Description	Qty	Serial Number
		Note: This list covers following specifications.			
		With 2-Spool Control Valve, Power Train Guard			
		With 3-Spool Control Valve, Power Train Guard			
		421-971-4190	Guard	1	90216-
1	C1		• Guard	1	90216-
2		421-46-45170	• Sheet	3	90216-
3		421-971-4170	Plate	1	90216-
4		421-971-4160	Plate	1	90216-
5		01010-D1220	Bolt	8	90216-
6		01643-71232	Washer	8	90216-
7		01010-D1025	Bolt	12	90216-
8		01643-71032	Washer	12	90216-

FIG. J4190-017006 Articulate Lock Bar and Frame Cover (With 2-Spool Control Valve, For EU New Noise Arrangement 2) (Sheet)

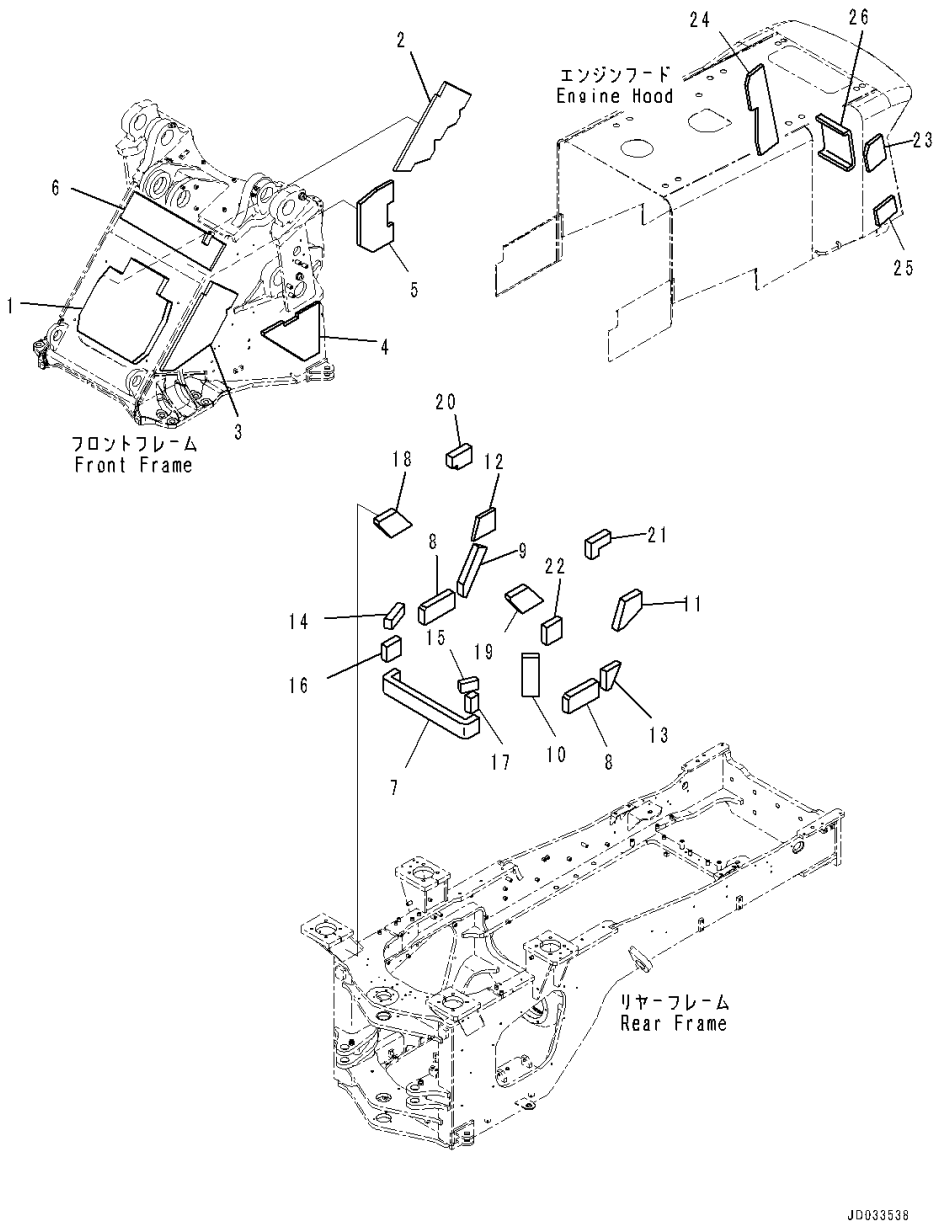

Index	Code	Part Number	Description	Qty	Serial Number
1		421-Z84-4110	Sheet	1	90216-
2		421-Z84-4130	Sheet	1	90216-
3		421-Z84-4120	Sheet	1	90216-
4		421-Z84-4150	Sheet	1	90216-
5		421-Z84-4610	Sheet	1	90216-
6		421-Z84-4140	Sheet	1	90216-
7		421-Z84-4530	Sheet	1	90216-
8		421-Z84-4180	Sheet	2	90216-
9		421-Z84-4210	Sheet	1	90216-
10		421-Z84-4220	Sheet	1	90216-
11		421-Z84-4240	Sheet	1	90216-
12		421-Z84-4270	Sheet	1	90216-
13		421-Z84-4260	Sheet	1	90216-
14		421-Z84-4290	Sheet	1	90216-
15		421-Z84-4760	Sheet	1	90216-
16		421-Z84-4300	Sheet	1	90216-
17		421-Z84-4770	Sheet	1	90216-
18		421-Z84-4330	Sheet	1	90216-
19		421-Z84-4340	Sheet	1	90216-
20		421-Z84-4351	Sheet	1	90216-
21		421-Z84-4730	Sheet	1	90216-
22		421-Z84-4590	Sheet	1	90216-
23		421-Z84-4710	Sheet	1	90216-
24		421-Z84-4720	Sheet	1	90216-
25		421-Z84-4740	Sheet	1	90216-
26		421-Z84-4411	Sheet	1	90216-

FIG. J4190-019001 Articulate Lock Bar and Frame Cover (Front Cover)

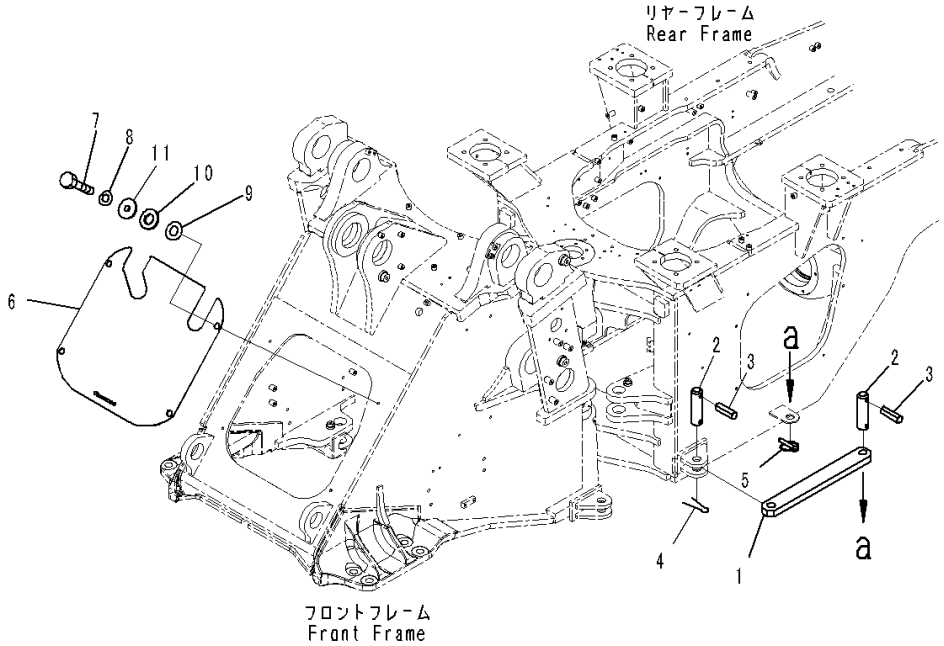

Index	Code	Part Number	Description	Qty	Serial Number
		Note: This list covers following specifications.			
		With 3-Spool Control Valve			
		With 3-Spool Control Valve, Power Train Guard			
		With 3-Spool Control Valve, Auto-greasing System			
		With 3-Spool Control Valve, For EU New Noise			
		Arrangement 2			
1		421-46-12920	Bar, Lock	1	90216-
2		421-46-12721	Pin	2	90216-
3		04025-01065	• Pin, Spring	1	90216-
4		04050-10060	Pin, Cotter	1	90216-
5		421-46-12740	Pin, Linch	1	90216-
6		421-877-4540	Cover	1	90216-
7		01010-D1235	Bolt	4	90216-
8		01643-71232	Washer	4	90216-
9		01640-22232	Washer, Flat	4	90216-
10		415-46-11380	Rubber	4	90216-
11		421-46-34420	Collar	4	90216-

FIG. J4190-023006 Articulate Lock Bar and Frame Cover (With 3-Spool Control Valve, Auto-greasing System) (Sheet)

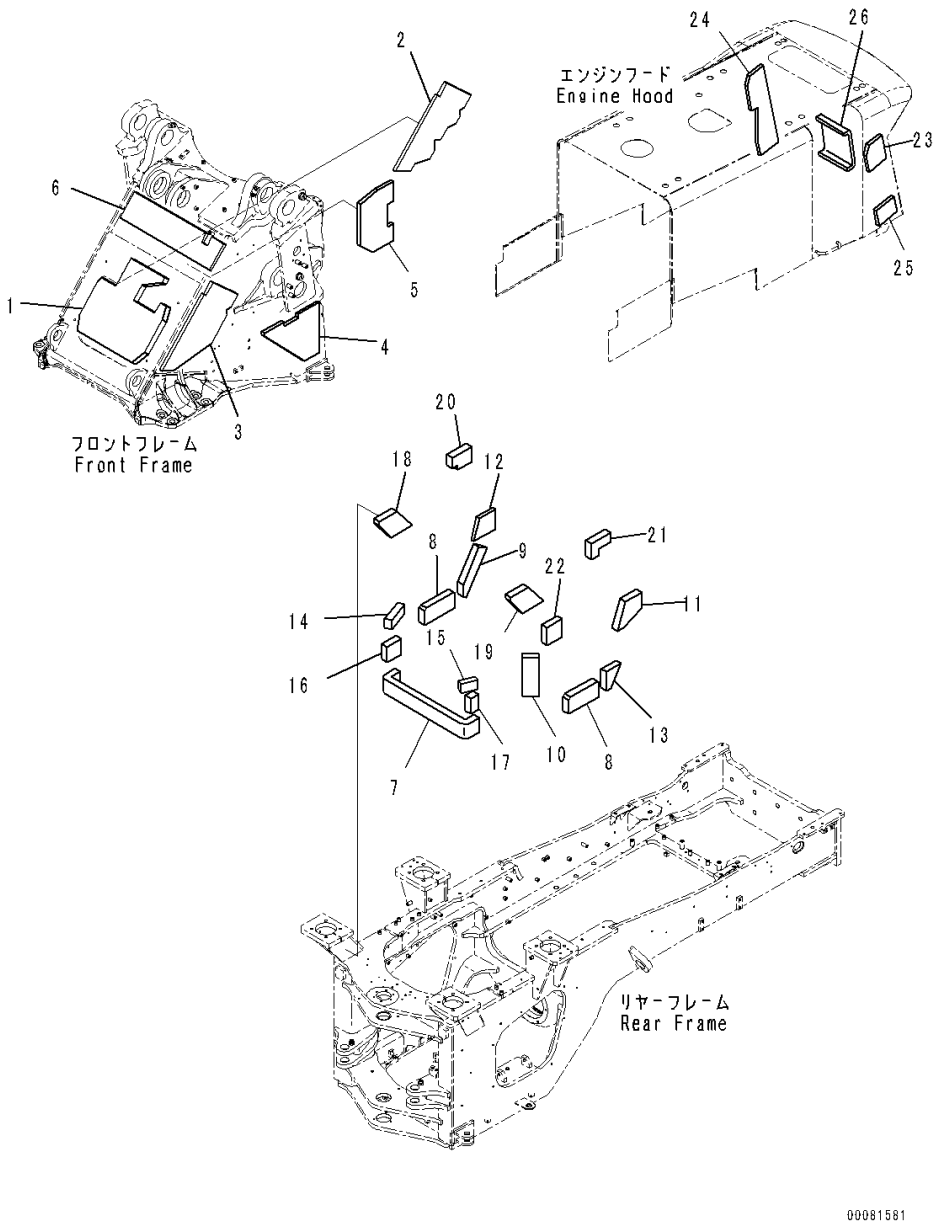

Index	Code	Part Number	Description	Qty	Serial Number
1		421-877-4630	Sheet	1	90216-
2		421-Z84-4130	Sheet	1	90216-
3		421-Z84-4120	Sheet	1	90216-
4		421-Z84-4150	Sheet	1	90216-
5		421-Z84-4610	Sheet	1	90216-
6		421-Z84-4140	Sheet	1	90216-
7		421-Z84-4530	Sheet	1	90216-
8		421-Z84-4180	Sheet	2	90216-
9		421-Z84-4210	Sheet	1	90216-
10		421-S95-7430	Sheet	1	90216-
11		421-Z84-4240	Sheet	1	90216-
12		421-Z84-4270	Sheet	1	90216-
13		421-Z84-4260	Sheet	1	90216-
14		421-Z84-4290	Sheet	1	90216-
15		421-Z84-4760	Sheet	1	90216-
16		421-Z84-4300	Sheet	1	90216-
17		421-Z84-4770	Sheet	1	90216-
18		421-Z84-4330	Sheet	1	90216-
19		421-Z84-4340	Sheet	1	90216-
20		421-Z84-4351	Sheet	1	90216-
21		421-Z84-4730	Sheet	1	90216-
22		421-Z84-4590	Sheet	1	90216-
23		421-Z84-4710	Sheet	1	90216-
24		421-Z84-4720	Sheet	1	90216-
25		421-Z84-4740	Sheet	1	90216-
26		421-Z84-4411	Sheet	1	90216-

FIG. J4190-020006 Articulate Lock Bar and Frame Cover (With 3-Spool Control Valve, For EU New Noise Arrangement 2) (Sheet)

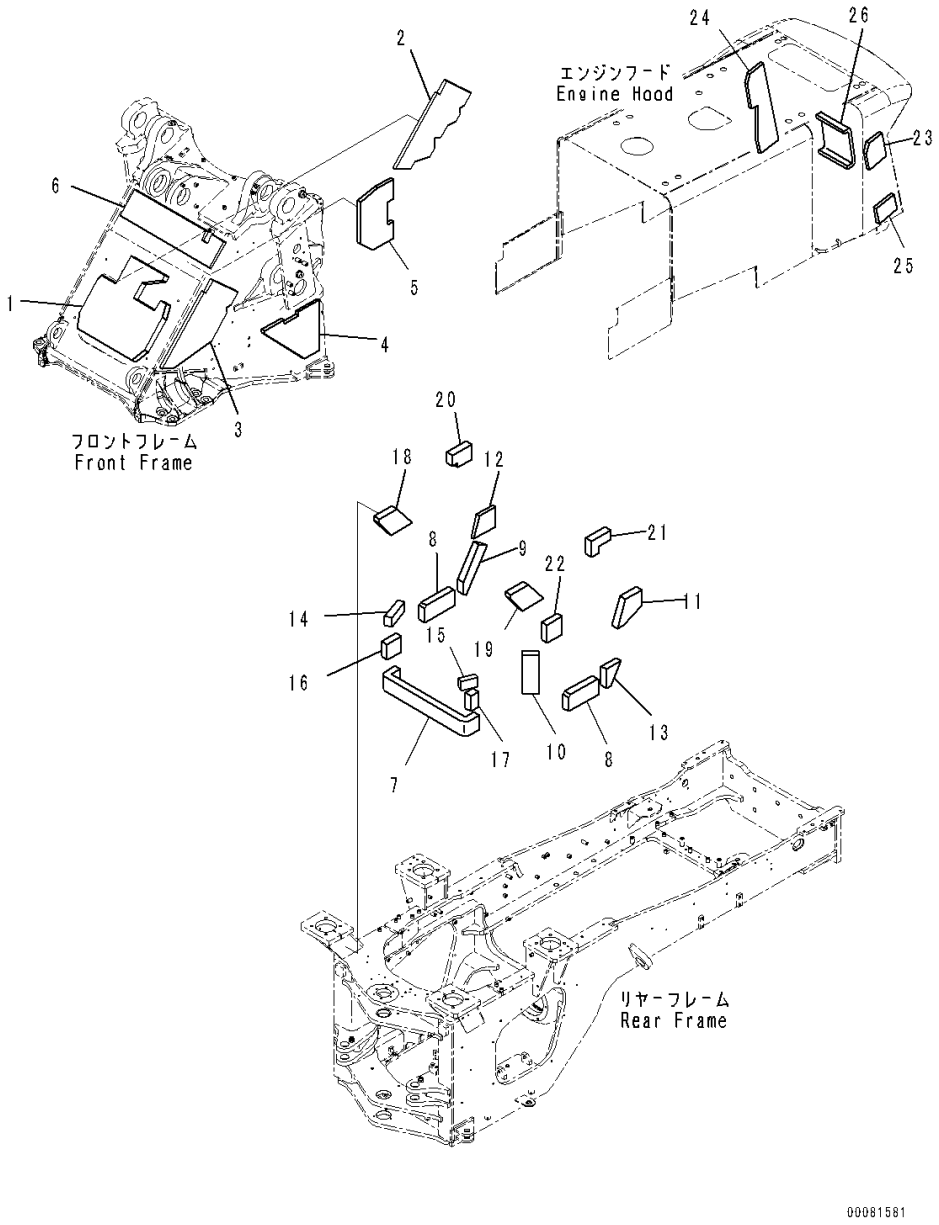

Index	Code	Part Number	Description	Qty	Serial Number
1		421-877-4630	Sheet	1	90216-
2		421-Z84-4130	Sheet	1	90216-
3		421-Z84-4120	Sheet	1	90216-
4		421-Z84-4150	Sheet	1	90216-
5		421-Z84-4610	Sheet	1	90216-
6		421-Z84-4140	Sheet	1	90216-
7		421-Z84-4530	Sheet	1	90216-
8		421-Z84-4180	Sheet	2	90216-
9		421-Z84-4210	Sheet	1	90216-
10		421-Z84-4220	Sheet	1	90216-
11		421-Z84-4240	Sheet	1	90216-
12		421-Z84-4270	Sheet	1	90216-
13		421-Z84-4260	Sheet	1	90216-
14		421-Z84-4290	Sheet	1	90216-
15		421-Z84-4760	Sheet	1	90216-
16		421-Z84-4300	Sheet	1	90216-
17		421-Z84-4770	Sheet	1	90216-
18		421-Z84-4330	Sheet	1	90216-
19		421-Z84-4340	Sheet	1	90216-
20		421-Z84-4351	Sheet	1	90216-
21		421-Z84-4730	Sheet	1	90216-
22		421-Z84-4590	Sheet	1	90216-
23		421-Z84-4710	Sheet	1	90216-
24		421-Z84-4720	Sheet	1	90216-
25		421-Z84-4740	Sheet	1	90216-
26		421-Z84-4411	Sheet	1	90216-

FIG. J4210-001001 Rear Axle Support

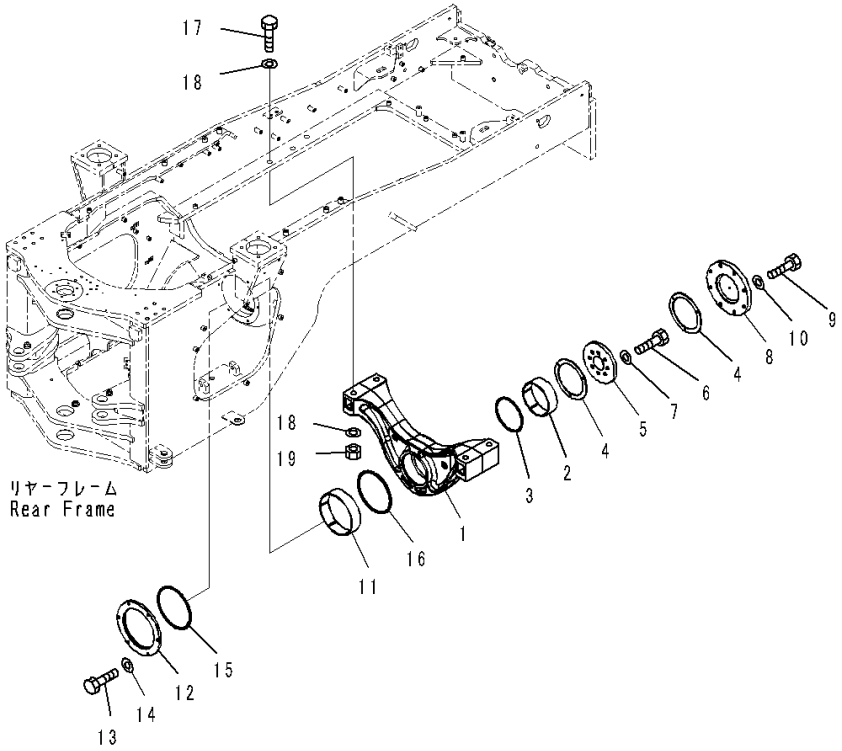

Index	Code	Part Number	Description	Qty	Serial Number
1		421-46-37110	Support	1	90216-
2		421-46-37120	Bushing	1	90216-
3		419-46-12480	Packing	1	90216-
4		421-46-37130	Washer, Thrust	2	90216-
5		424-46-12221	Plate	1	90216-
6		01010-61665	Bolt	8	90216-
7		01643-31645	Washer	8	90216-
8		424-46-12191	Cover	1	90216-
9		01010-61665	Bolt	8	90216-
10		01643-31645	Washer	8	90216-
11		421-46-37140	Bushing	1	90216-
12		421-46-37150	Retainer	1	90216-
13		01010-81235	Bolt	6	90216-
14		01643-31232	Washer	6	90216-
15		421-46-37160	Packing	1	90216-
16		421-46-37170	U-packing	1	90216-
17		01011-62790	Bolt	4	90216-
18		01643-32780	Washer	8	90216-
19		01580-02722	Nut	4	90216-

FIG. J4710-009001 Remote Greasing System (With Brake Oil Cooling System) (Axle Support)

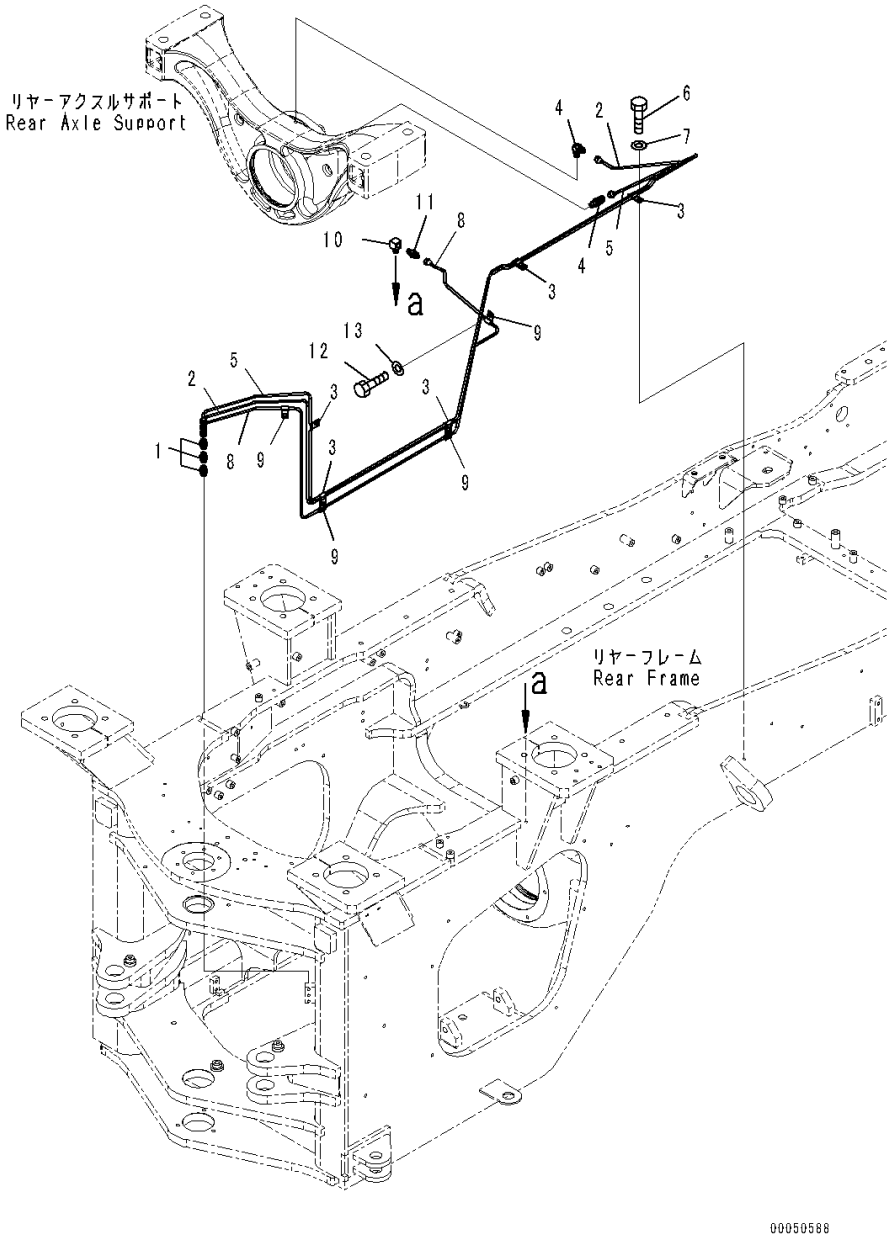

Index	Code	Part Number	Description	Qty	Serial Number
1		423-09-12110	Connector	3	90216-
2		421-46-46140	Tube	1	90216-
3		04435-50610	Clip	5	90216-
4		421-09-12540	Elbow	2	90216-
5		421-46-46150	Tube	1	90216-
6		01010-81020	Bolt	5	90216-
7		01643-31032	Washer	5	90216-
8		421-U45-4160	Tube	1	90216-
9		04434-50610	Clip	4	90216-
10		205-62-53391	Elbow	1	90216-
11		423-09-12110	Connector	1	90216-
12		01010-81020	Bolt	2	90216-
13		01643-31032	Washer	2	90216-

FIG. J4710-009003 Remote Greasing System (Bucket Cylinder)

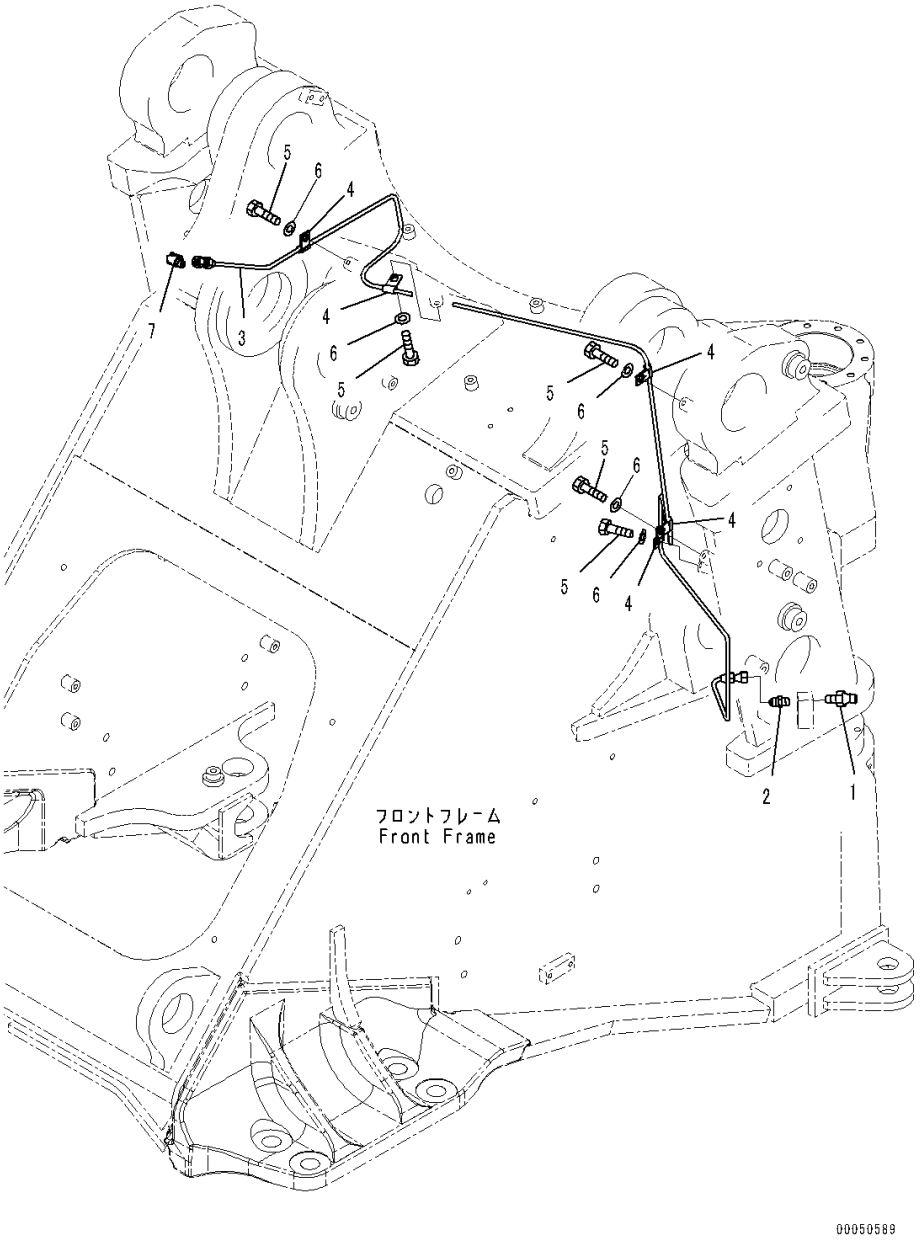

Index	Code	Part Number	Description	Qty	Serial Number
		Note: This list covers following specifications.			
		With Brake Oil Cooling System			
		Rear Axle, Steering Cylinder, Bucket			
1		07020-00000	Fitting, Grease	1	90216-
2		423-09-12110	Connector	1	90216-
3		421-46-46210	Tube	1	90216-
4		04434-50610	Clip	5	90216-
5		01010-81020	Bolt	5	90216-
6		01643-31032	Washer	5	90216-
7		421-09-12540	Elbow	1	90216-

FIG. J4710-009004 Remote Greasing System (Grease Fitting)

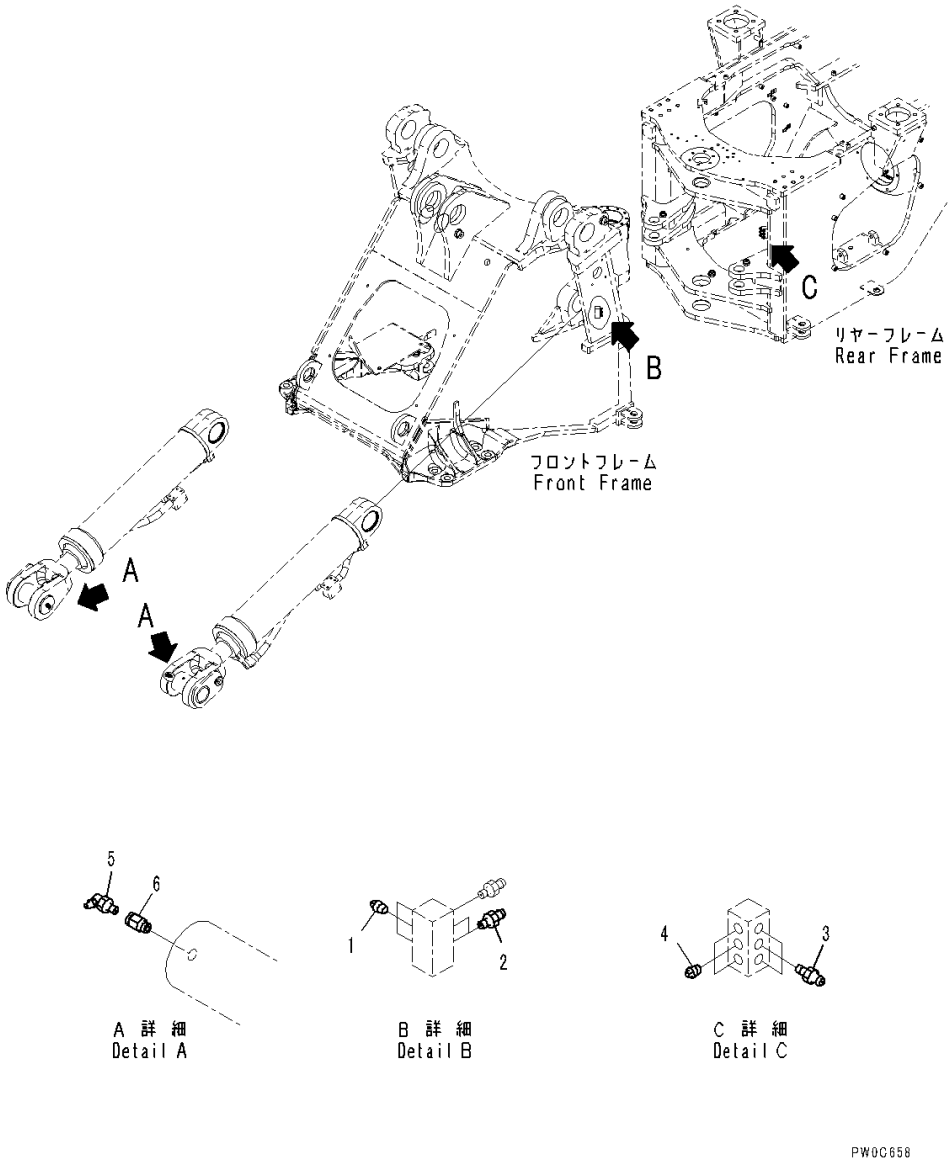

Index	Code	Part Number	Description	Qty	Serial Number
		Note: This list covers following specifications.			
		With Brake Oil Cooling System			
		Rear Axle, Steering Cylinder, Bucket			
1		07042-70108	Plug	3	90216-
2		07020-00000	Fitting, Grease	2	90216-
3		07020-00000	Fitting, Grease	3	90216-
4		07042-70108	Plug	3	90216-
5		07020-00900	Fitting, Grease	2	90216-
6		423-70-11160	Nipple	2	90216-

FIG. J4710-005001 Remote Greasing System (Rear Axle, Steering Cylinder, Bucket) (Axle Support)

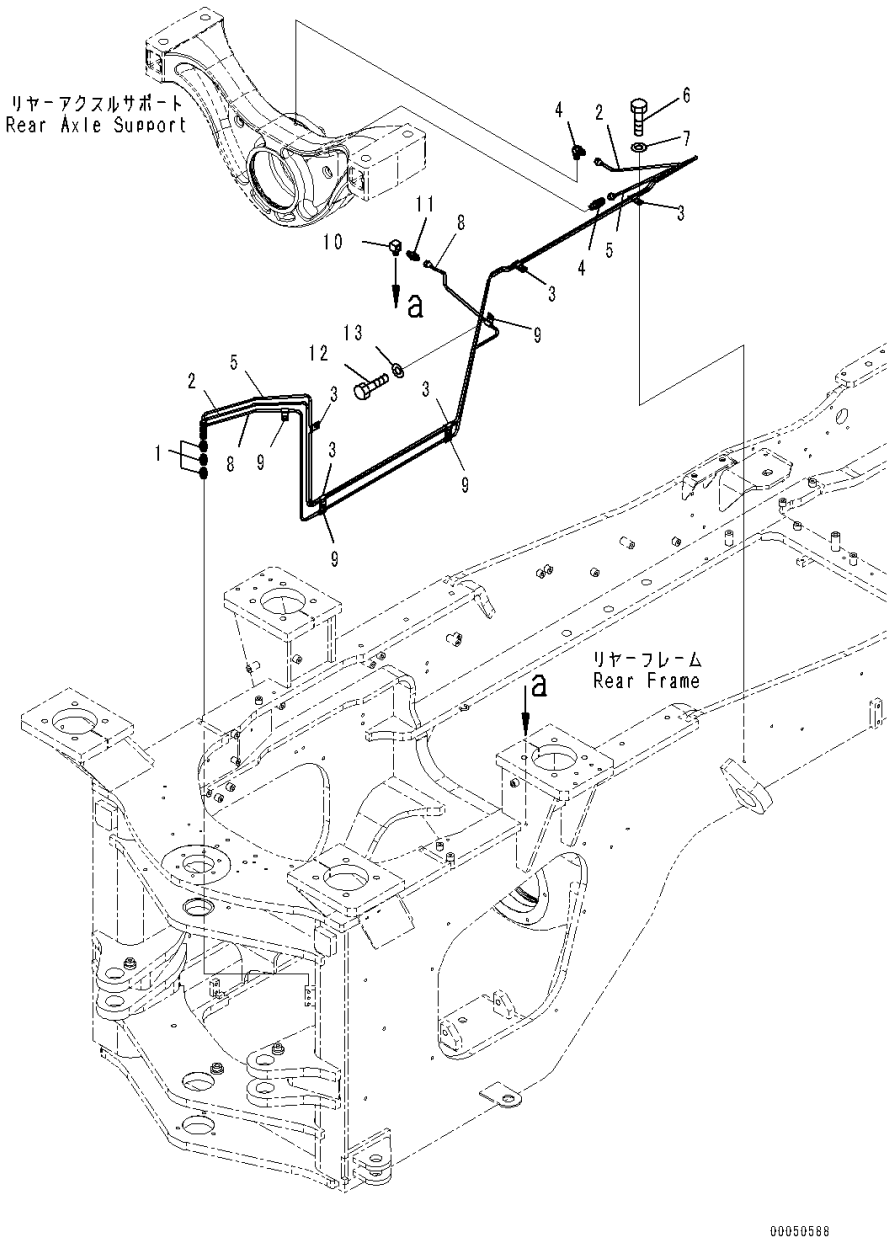

Index	Code	Part Number	Description	Qty	Serial Number
1		423-09-12110	Connector	3	90216-
2		421-46-46140	Tube	1	90216-
3		04435-50610	Clip	5	90216-
4		421-09-12540	Elbow	2	90216-
5		421-46-46150	Tube	1	90216-
6		01010-81020	Bolt	5	90216-
7		01643-31032	Washer	5	90216-
8		421-46-46271	Tube	1	90455-
9		04434-50610	Clip	4	90216-
10		205-62-53391	Elbow	1	90216-
11		423-09-12110	Connector	1	90216-
12		01010-81020	Bolt	2	90216-
13		01643-31032	Washer	2	90216-

FIG. J4710-005002 Remote Greasing System (Steering Cylinder)

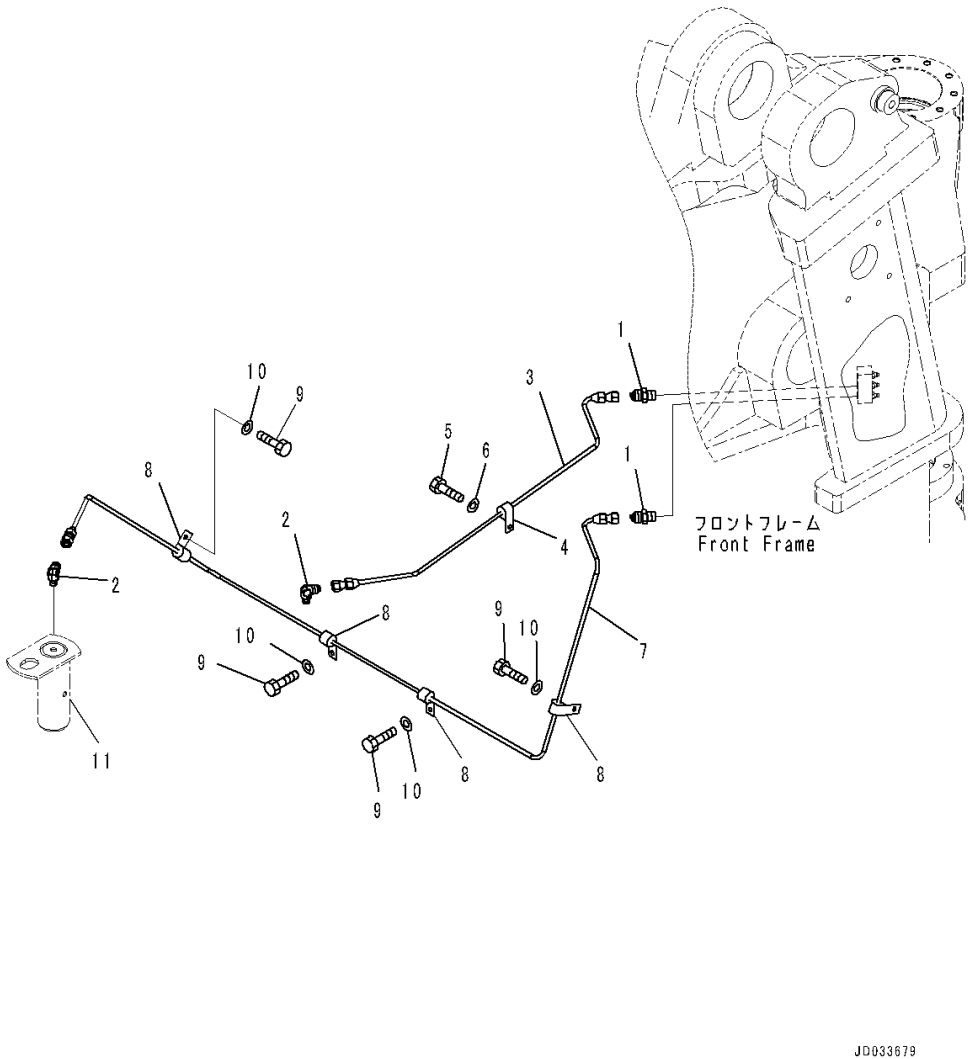

Index	Code	Part Number	Description	Qty	Serial Number
		Note: This list covers following specifications.			
		With Brake Oil Cooling System			
		Rear Axle, Steering Cylinder, Bucket			
1		423-09-12110	Connector	2	90216-
2		421-09-12540	Elbow	2	90216-
3		421-46-36222	Tube	1	90216-
4		04434-50610	Clip	1	90216-
5		01010-81020	Bolt	1	90841-
6		01643-31032	Washer	1	90216-
7		421-46-46230	Tube	1	90216-
8		04434-50610	Clip	4	90216-
9		01010-81020	Bolt	4	90841-
10		01643-31032	Washer	4	90216-
11		(421-46-21760)	Pin(Refer to Page 488)		-

FIG. J4710-007001 Auto-greasing System (Pump and Feeder)

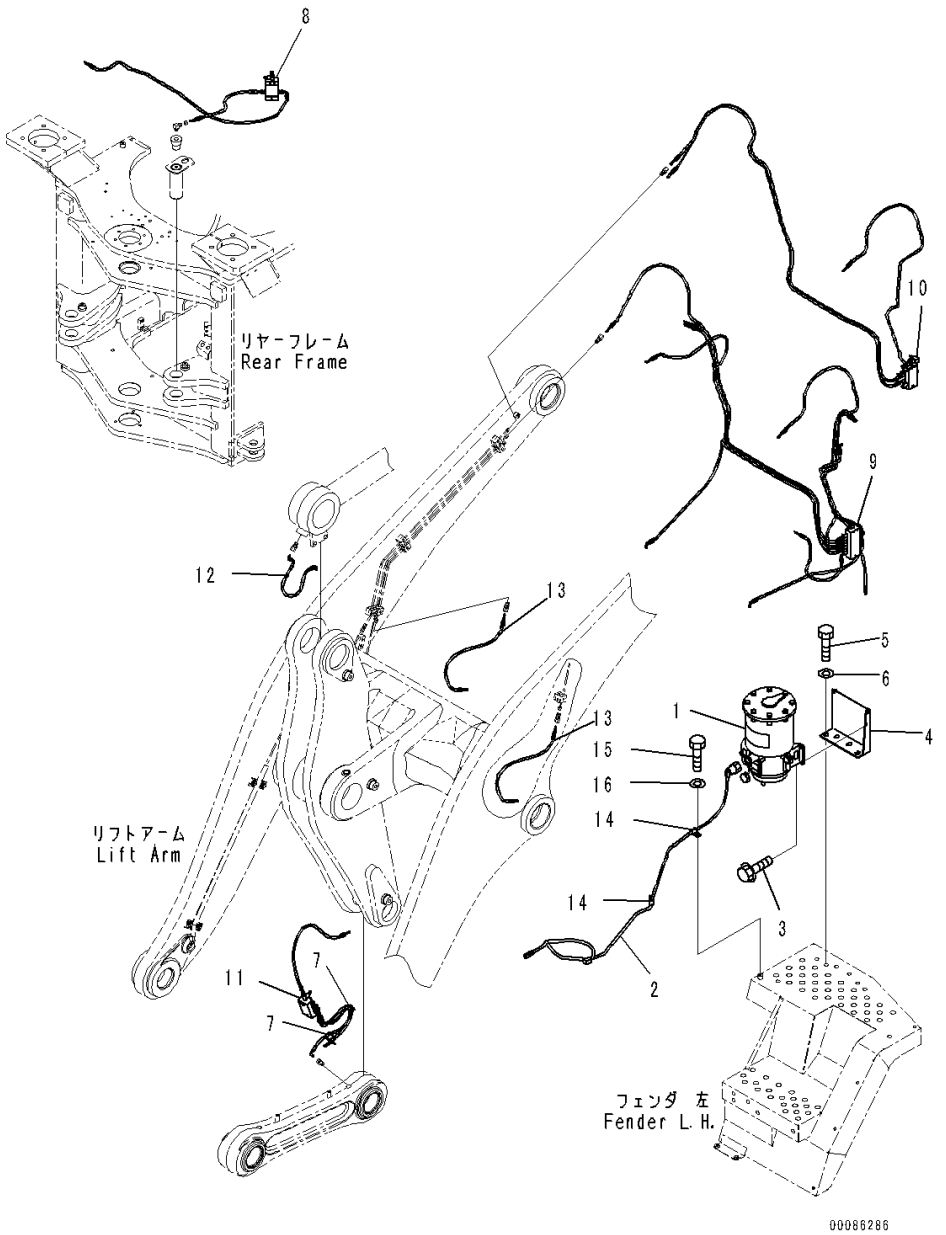

Index	Code	Part Number	Description	Qty	Serial Number
		425-S96-H250	Pump Assembly	1	90216-
1	C1		• Pump	1	90216-
2		423-06-H2660	• Wiring Harness	1	90216-
3		01435-00825	Bolt	3	90216-
4		421-S95-7490	Bracket	1	90216-
5		01010-D1225	Bolt	4	90216-
6		01643-71232	Washer	4	90216-
7		08034-20519	Band	3	90216-
		421-S96-H230	Feeder Assembly	1	90216-
8		421-S96-H290	• Feeder Assembly	1	90216-
9		421-S96-H300	• Feeder Assembly	1	90216-
10		421-S96-H310	• Feeder Assembly	1	90216-
		421-S96-H240	Feeder Assembly	1	90216-
11		421-S96-H322	• Feeder Assembly	1	90216-
12		424-09-H1840	• Hose	1	90216-
13		421-09-H4680	• Hose	2	90216-
14		04434-51210	Clip	2	90216-
15		01010-81020	Bolt	1	90216-
16		01643-31032	Washer	1	90216-

FIG. J4710-007002 Auto-greasing System (Rear Frame Side) (1/2)

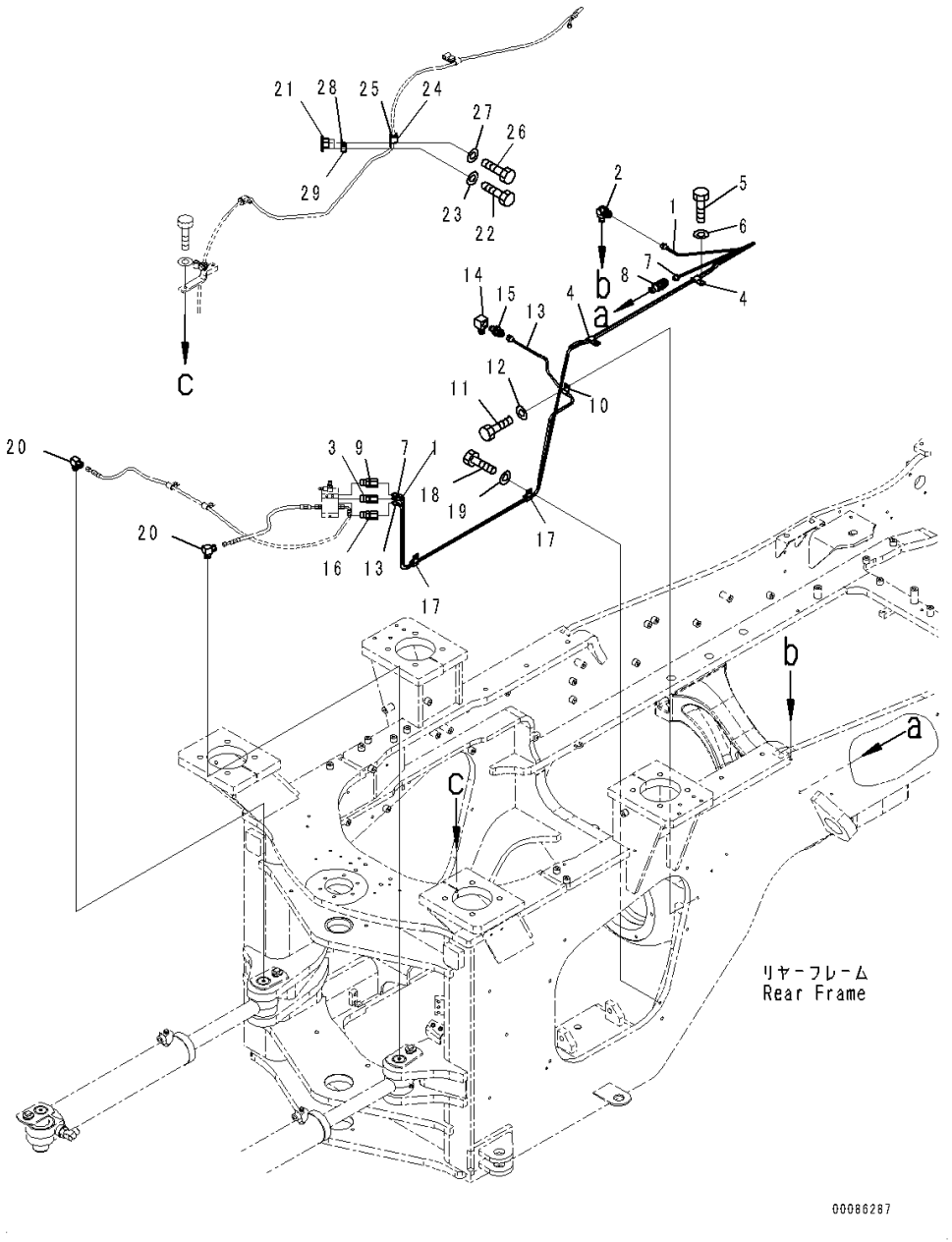

Index	Code	Part Number	Description	Qty	Serial Number
1		421-S95-7710	Tube	1	90216-
2		421-09-12540	Elbow	1	90216-
3		421-S95-7640	Connector	1	90216-
4		04435-50610	Clip	4	90216-
5		01010-81020	Bolt	2	90216-
6		01643-31032	Washer	2	90216-
7		421-S95-7720	Tube	1	90216-
8		421-09-12540	Elbow	1	90216-
9		421-S95-7640	Connector	1	90216-
10		04434-50610	Clip	3	90216-
11		01010-81020	Bolt	1	90216-
12		01643-31032	Washer	1	90216-
13		421-S95-7481	Tube	1	90455-
14		205-62-53391	Elbow	1	90216-
15		423-09-12110	Connector	1	90216-
16		421-S95-7640	Connector	1	90216-
17		04434-51310	Clip	2	90216-
18		01010-81020	Bolt	2	90216-
19		01643-31032	Washer	2	90216-
20		421-S95-7630	Elbow	2	90216-
21		421-S95-7280	Plate	1	90216-
22		01010-81030	Bolt	2	90216-
23		01643-31032	Washer	2	90216-
24		04434-51710	Clip	1	90216-
25		07095-20211	Cushion	1	90216-
26		01010-81020	Bolt	1	90216-
27		01643-31032	Washer	1	90216-
28		04434-51210	Clip	1	90216-
29		07095-20211	Cushion	1	90216-

FIG. J4710-007003 Auto-greasing System (Rear Frame Side) (2/2)

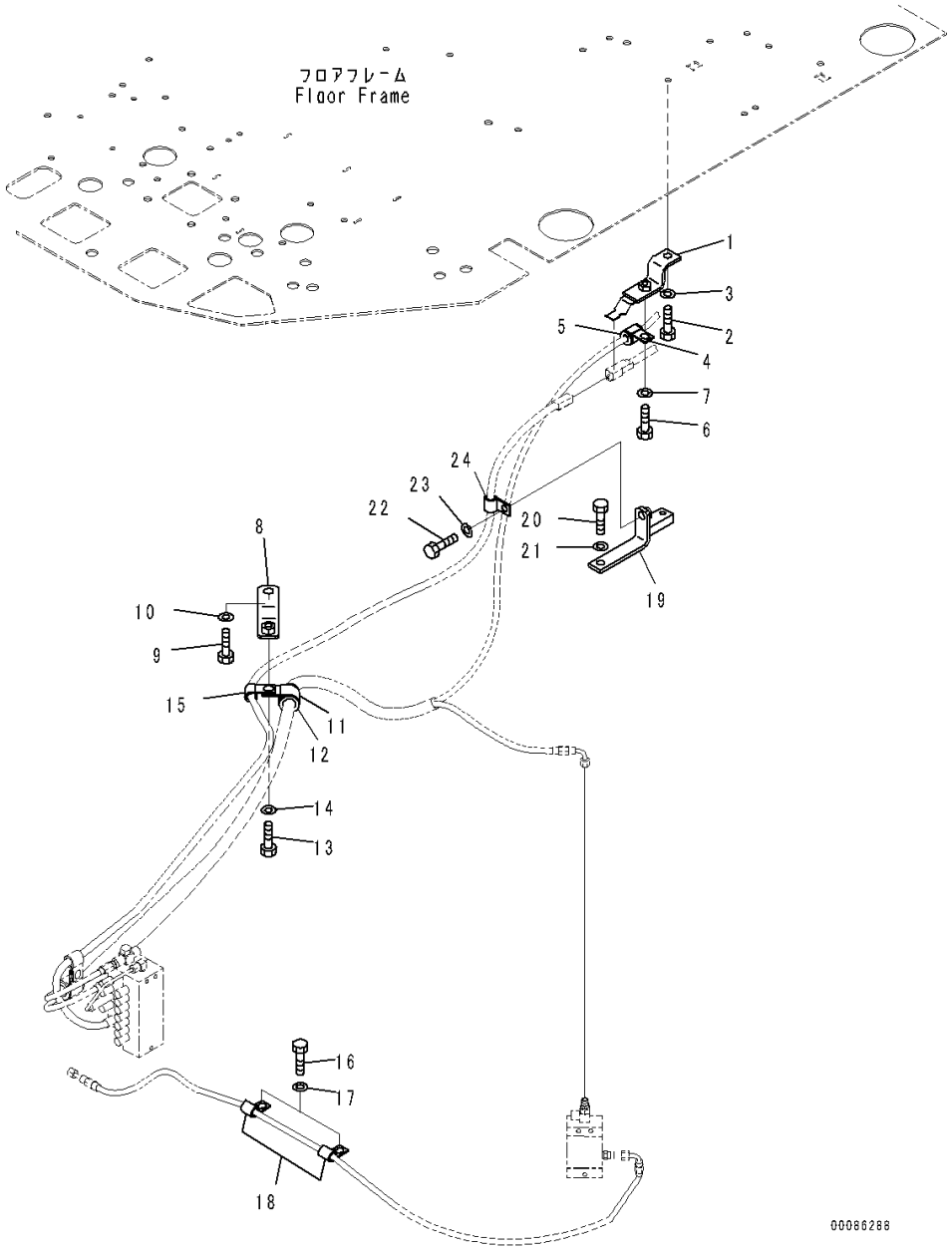

Index	Code	Part Number	Description	Qty	Serial Number
1		421-S95-7260	Plate	1	90216-
2		01010-81025	Bolt	1	90216-
3		01643-31032	Washer	1	90216-
4		04434-51710	Clip	1	90216-
5		07095-20211	Cushion	1	90216-
6		01010-81020	Bolt	1	90216-
7		01643-31032	Washer	1	90216-
8		423-S95-7510	Bracket	1	90216-
9		01010-81230	Bolt	1	90216-
10		01643-31232	Washer	1	90216-
11		04434-52512	Clip	1	90216-
12		07095-20318	Cushion	1	90216-
13		01010-81225	Bolt	1	90216-
14		01643-31232	Washer	1	90216-
15		04434-51312	Clip	1	90216-
16		01010-81020	Bolt	2	90216-
17		01643-31032	Washer	2	90216-
18		04434-51210	Clip	2	90216-
19		23B-07-61412	Bracket	1	90216-
20		01010-81020	Bolt	1	90216-
21		01643-31032	Washer	1	90216-
22		01010-81025	Bolt	1	90216-
23		01643-31032	Washer	1	90216-
24		04434-51210	Clip	1	90216-

FIG. J4710-007004 Auto-greasing System (Front Frame Side) (1/2)

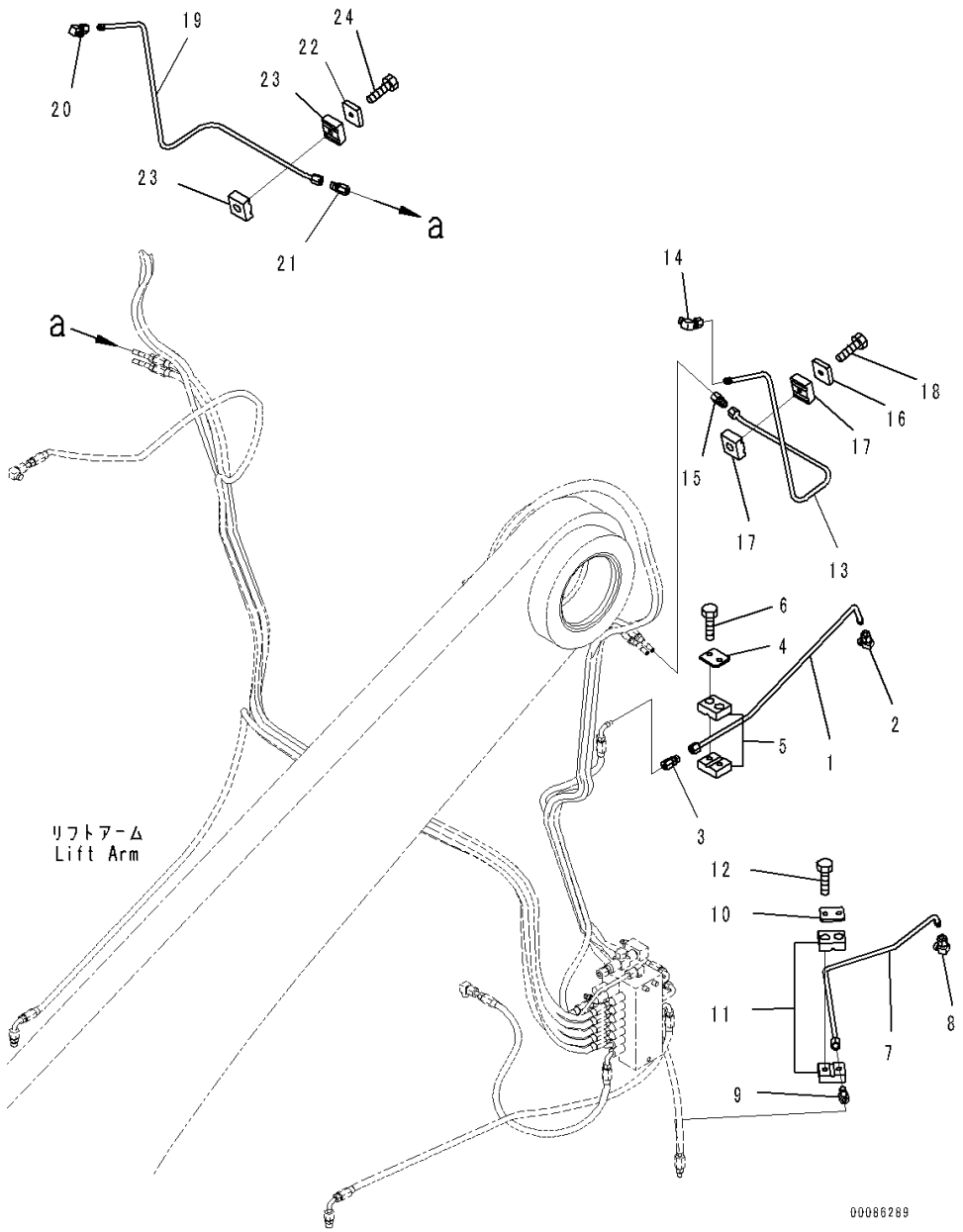

Index	Code	Part Number	Description	Qty	Serial Number
1		421-S95-7740	Tube	1	90216-
2		421-S95-7630	Elbow	1	90216-
3		418-S95-4450	Joint	1	90216-
4		418-S95-4530	Plate	1	90216-
5		418-S95-4521	Clamp	2	90216-
6		418-S95-4540	Screw	2	90216-
7		421-S95-7750	Tube	2	90216-
8		421-S95-7630	Elbow	1	90216-
9		418-S95-4450	Joint	1	90216-
10		418-S95-4530	Plate	1	90216-
11		418-S95-4521	Clamp	2	90216-
12		418-S95-4540	Screw	2	90216-
13		421-S95-7160	Tube	1	90216-
14		421-S95-7630	Elbow	1	90216-
15		418-S95-4450	Joint	1	90216-
16		418-S95-4480	Plate	1	90216-
17		418-S95-4471	Clamp	2	90216-
18		418-S95-4490	Screw	1	90216-
19		421-S95-7170	Tube	1	90216-
20		421-S95-7630	Elbow	1	90216-
21		418-S95-4450	Joint	1	90216-
22		418-S95-4480	Plate	1	90216-
23		418-S95-4471	Clamp	2	90216-
24		418-S95-4490	Screw	1	90216-

FIG. J4710-007005 Auto-greasing System (Front Frame Side) (2/2)

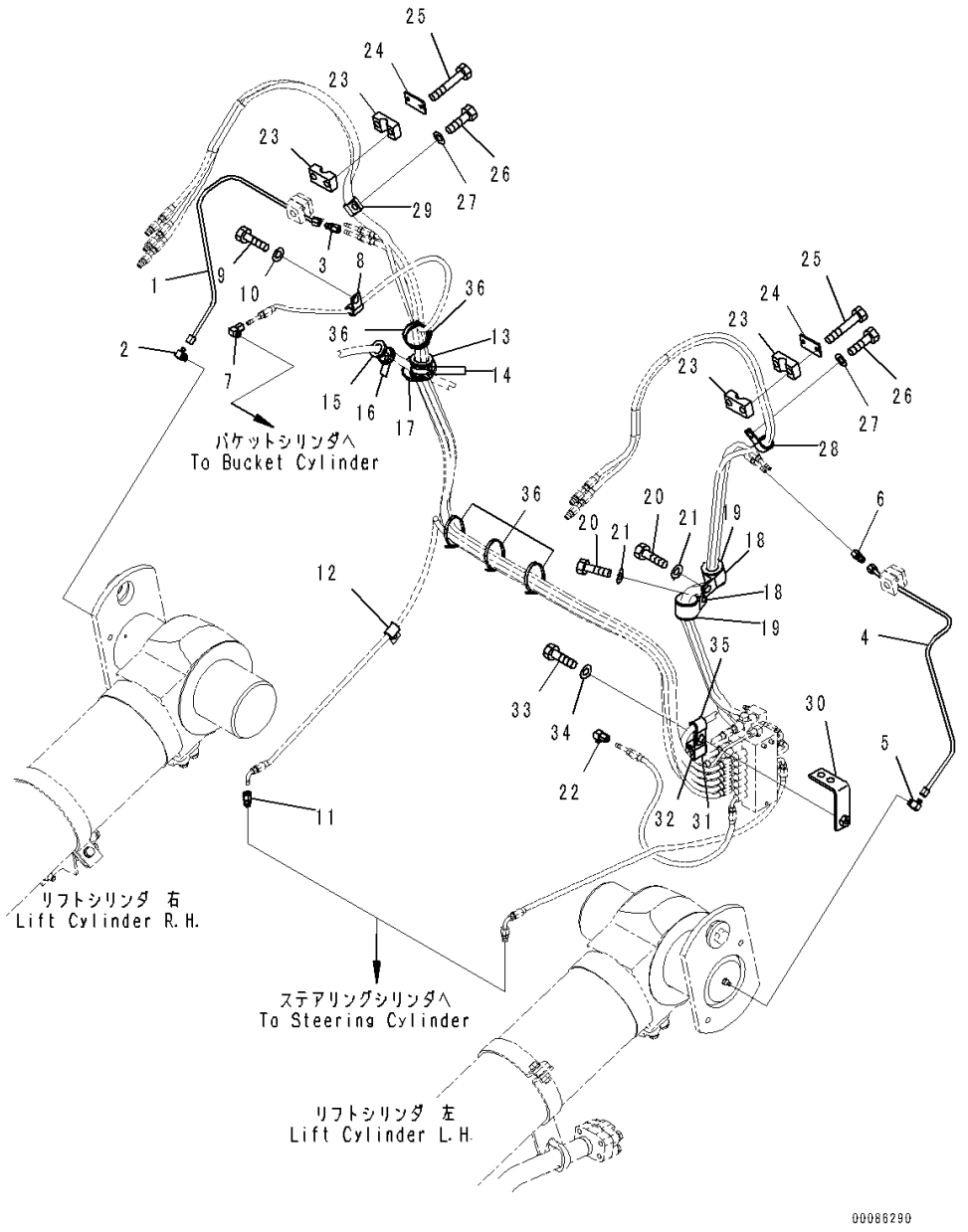

Index	Code	Part Number	Description	Qty	Serial Number
1		421-S95-7180	Tube	1	90216-
2		421-S95-7630	Elbow	1	90216-
3		418-S95-4450	Joint	1	90216-
4		421-S95-7590	Tube	1	90216-
5		421-S95-7630	Elbow	1	90216-
6		418-S95-4450	Joint	1	90216-
7		421-S95-7630	Elbow	1	90216-
8		04434-51310	Clip	4	90216-
9		01010-81020	Bolt	4	90216-
10		01643-31032	Washer	4	90216-
11		418-S95-4460	Connector	1	90216-
12		04434-51210	Clip	1	90216-
13		07095-20625	Cushion	1	90216-
14		08034-20519	Band	2	90216-
15		07095-20318	Cushion	1	90216-
16		08034-20414	Band	2	90216-
17		08034-20536	Band	1	90216-
18		04434-53211	Clip	2	90216-
19		07095-20522	Cushion	2	90216-
20		01010-81020	Bolt	2	90216-
21		01643-31032	Washer	2	90216-
22		421-S95-7630	Elbow	2	90216-
23		421-S95-7651	Clamp	4	90216-
24		421-S95-7660	Plate	2	90216-
25		01010-80640	Bolt	4	90216-
26		01010-81020	Bolt	2	90216-
27		01643-31032	Washer	2	90216-
28		04434-51910	Clip	1	90216-
29		04434-52110	Clip	1	90216-
30		421-S95-7270	Bracket	1	90216-
31		04434-52511	Clip	1	90216-
32		07095-20318	Cushion	1	90216-
33		01010-81025	Bolt	1	90216-
34		01643-31032	Washer	1	90216-
35		04434-51310	Clip	1	90216-
36		08034-20536	Band	5	90216-

FIG. J4710-007006 Auto-greasing System (Boom, Bell Crank and Link)

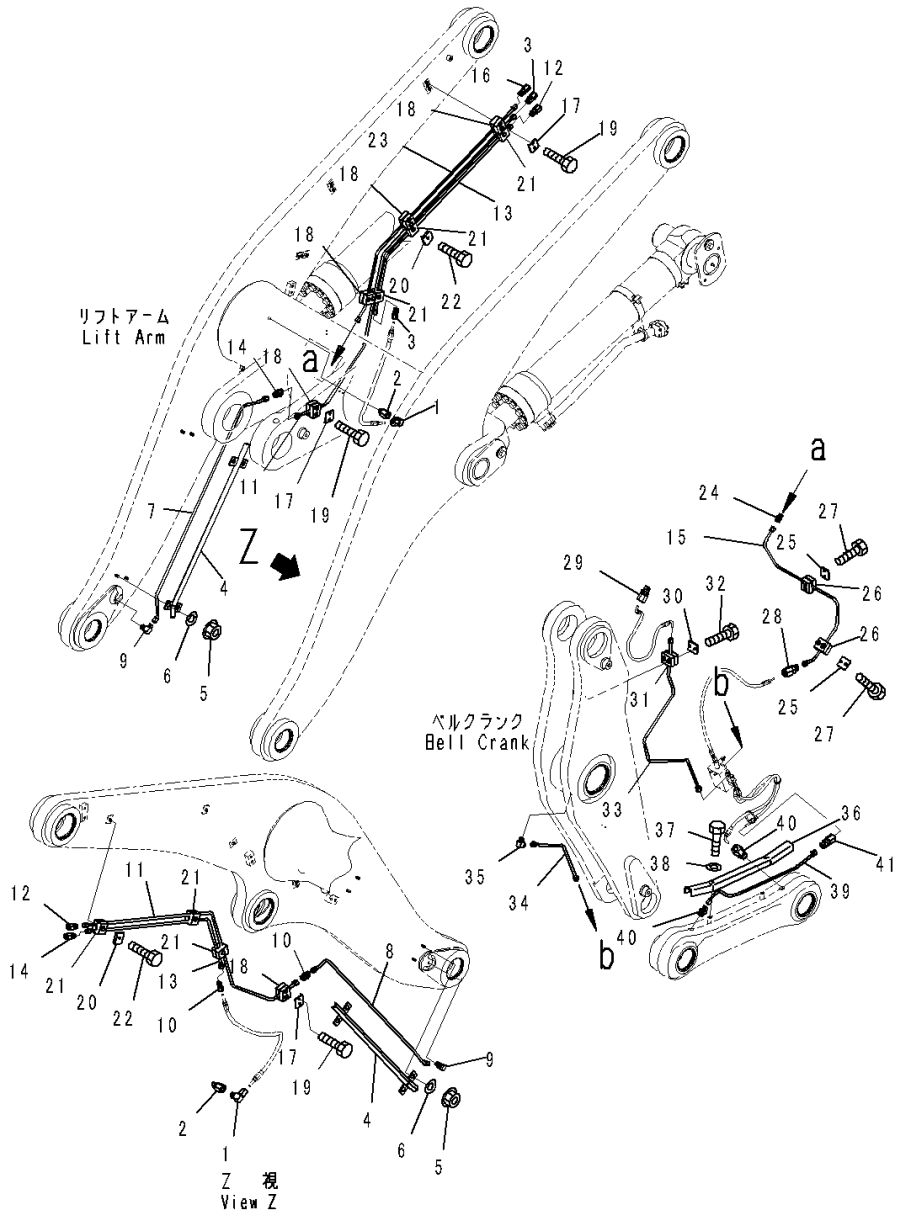

Index	Code	Part Number	Description	Qty	Serial Number
1		421-S95-7670	Elbow	2	90216-
2		421-S95-7680	Joint	2	90216-
3		418-S95-4450	Joint	2	90216-
4		423-S95-7170	Cover	2	90216-
5		01584-01008	Nut	8	90216-
6		423-09-41110	Washer	8	90216-
7		421-S95-7530	Tube	1	90216-
8		421-S95-7540	Tube	1	90216-
9		421-S95-7630	Elbow	2	90216-
10		418-S95-4450	Joint	2	90216-
11		421-S95-7550	Tube	2	90216-
12		418-S95-4450	Joint	2	90216-
13		421-S95-7560	Tube	2	90216-
14		418-S95-4450	Joint	2	90216-
15		421-S95-7570	Tube	1	90216-
16		418-S95-4450	Joint	1	90216-
17		418-S95-4530	Plate	5	90216-
18		418-S95-4521	Clamp	10	90216-
19		418-S95-4540	Screw	10	90216-
20		418-S95-4480	Plate	6	90216-
21		418-S95-4471	Clamp	12	90216-
22		418-S95-4490	Screw	6	90216-
23		421-S95-7580	Tube	1	90216-
24		418-S95-4450	Joint	1	90216-
25		418-S95-4530	Plate	2	90216-
26		418-S95-4521	Clamp	4	90216-
27		418-S95-4540	Screw	4	90216-
28		418-S95-4450	Joint	1	90216-
29		418-S95-4460	Connector	1	90216-
30		418-S95-4530	Plate	1	90216-
31		418-S95-4521	Clamp	2	90216-
32		418-S95-4540	Screw	2	90216-
33		421-S95-7230	Tube	1	90216-
34		421-S95-7240	Tube	1	90216-
35		421-S95-7630	Elbow	1	90216-
36		421-S95-7520	Cover	1	90216-
37		01010-80816	Bolt	2	90216-
38		01643-30823	Washer	2	90216-
39		421-S95-7190	Tube	1	90216-
40		418-S95-4460	Connector	2	90216-

FIG. J4710-007006 Auto-greasing System (Boom, Bell Crank and Link)

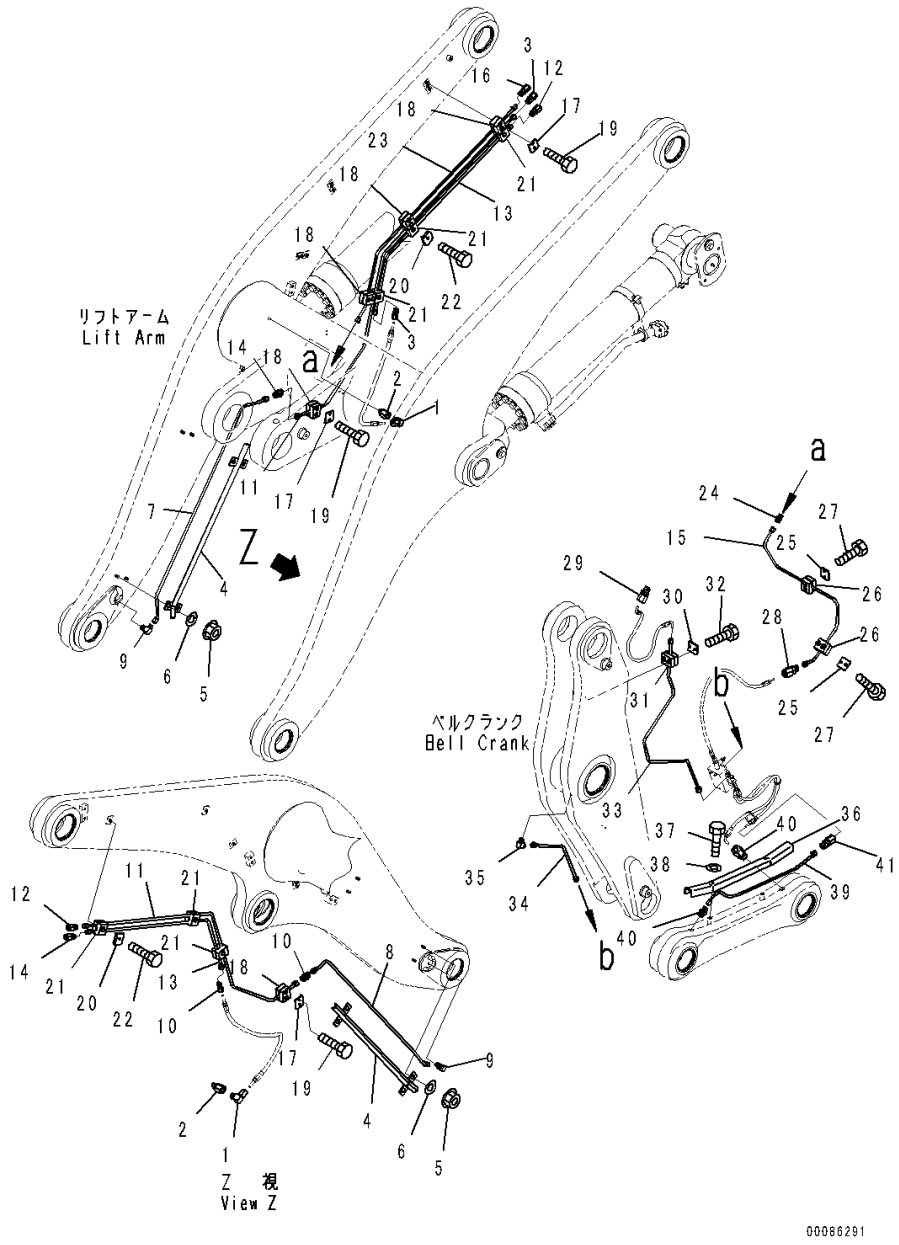

Index	Code	Part Number	Description	Qty	Serial Number
41		418-S95-4450	Joint	1	90216-

OPERATOR'S COMPARTMENT AND CONTROL SYSTEM

FIG. K0110-003001 Operator's Seat (Suspension Type, Reclining) (Inner Parts)

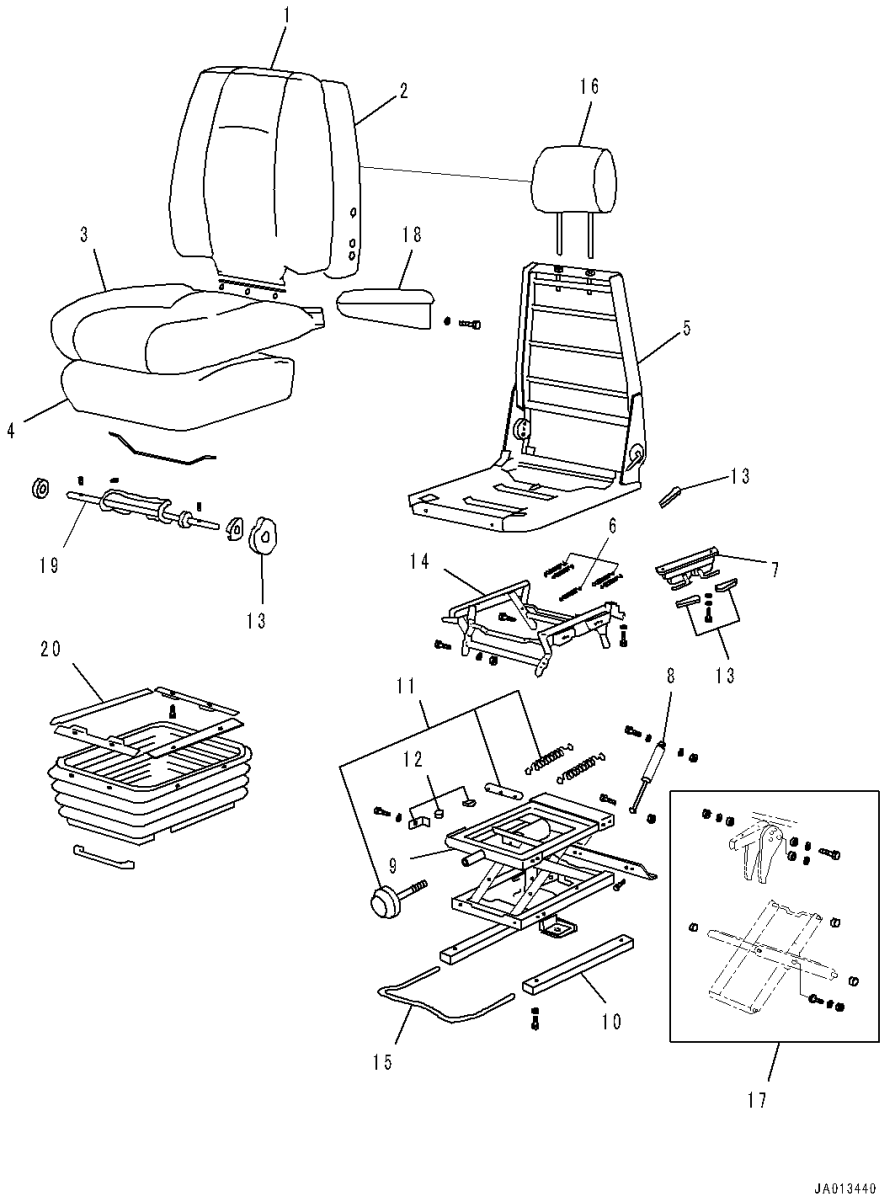

Index	Code	Part Number	Description	Qty	Serial Number
		421-57-41311	Seat Assembly	1	90238-
		AS177125+182	• Upper Assembly	1	90216-
1		AS182428	• • Cover Group	1	90216-
2		AS157144	• • Back Foam Kit	1	90216-
3		AS157146	• • Seat Cover Kit	1	90216-
4		AS157154	• • Seat Foam Kit	1	90216-
5		AS157130	• • Frame Kit	1	90216-
6		AS162056	• Spring Kit	1	90216-
7		AS157157	• Latch Kit	1	90216-
8		AS198244	• Damper Assembly	1	90216-
9		AS157230	• Suspension Assembly	1	90216-
10		AS166568	• Adjuster Kit	1	90216-
11		AS156737	• Weight Adjuster Kit	1	90216-
12		AS156717	• Up Stop and Bump Stop Kit	1	90216-
13		AS189098	• Knob Kit	1	90216-
14		AS202011	• Riser Kit	1	90216-
15		AS161796	• Handle Kit	1	90216-
16		AS197031	• Headrest Kit	1	90216-
17		AS156738	• Bearing Kit	1	90216-
18		AS165216	• Arm Rest	1	90216-
19		AS156790	• Mechanical Lumber Kit	1	90216-
20		AS163577	• Suspension Cover Kit	1	90216-

FIG. K0110-003002 Operator's Seat (Suspension Type, Reclining) (Mounting)

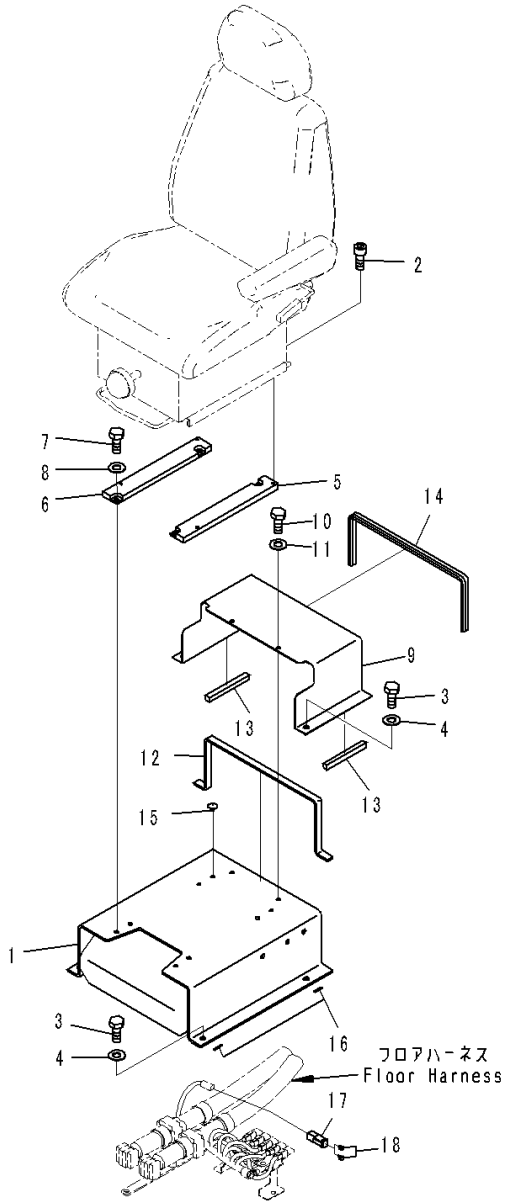

Index	Code	Part Number	Description	Qty	Serial Number
1		423-54-42730	Bracket	1	90216-
2		01252-70816	Bolt	4	90216-
3		01010-81235	Bolt	4	90216-
4		01643-31232	Washer	4	90216-
5		421-57-41320	Bracket	1	90216-
6		421-57-41330	Bracket	1	90216-
7		01010-80825	Bolt	4	90216-
8		01643-30823	Washer	4	90216-
9		423-54-42740	Cover	1	90216-
10		01010-80825	Bolt	2	90216-
11		01643-30823	Washer	2	90216-
12		423-54-42750	Sheet	1	90216-
13		423-54-42760	Sheet	2	90216-
14		423-54-42770	Sheet	1	90216-
15		421-09-21210	Button	2	90216-
16		421-57-31190	Shim, T=0.50mm	4	90216-
17		08192-12100	Connector Assembly	1	90932-
18		08191-00770	Plug, Connector	2	90932-

FIG. K0110-002001 Operator's Seat (Grammer, With Joystick Steering System) (Inner Parts) (1/2)

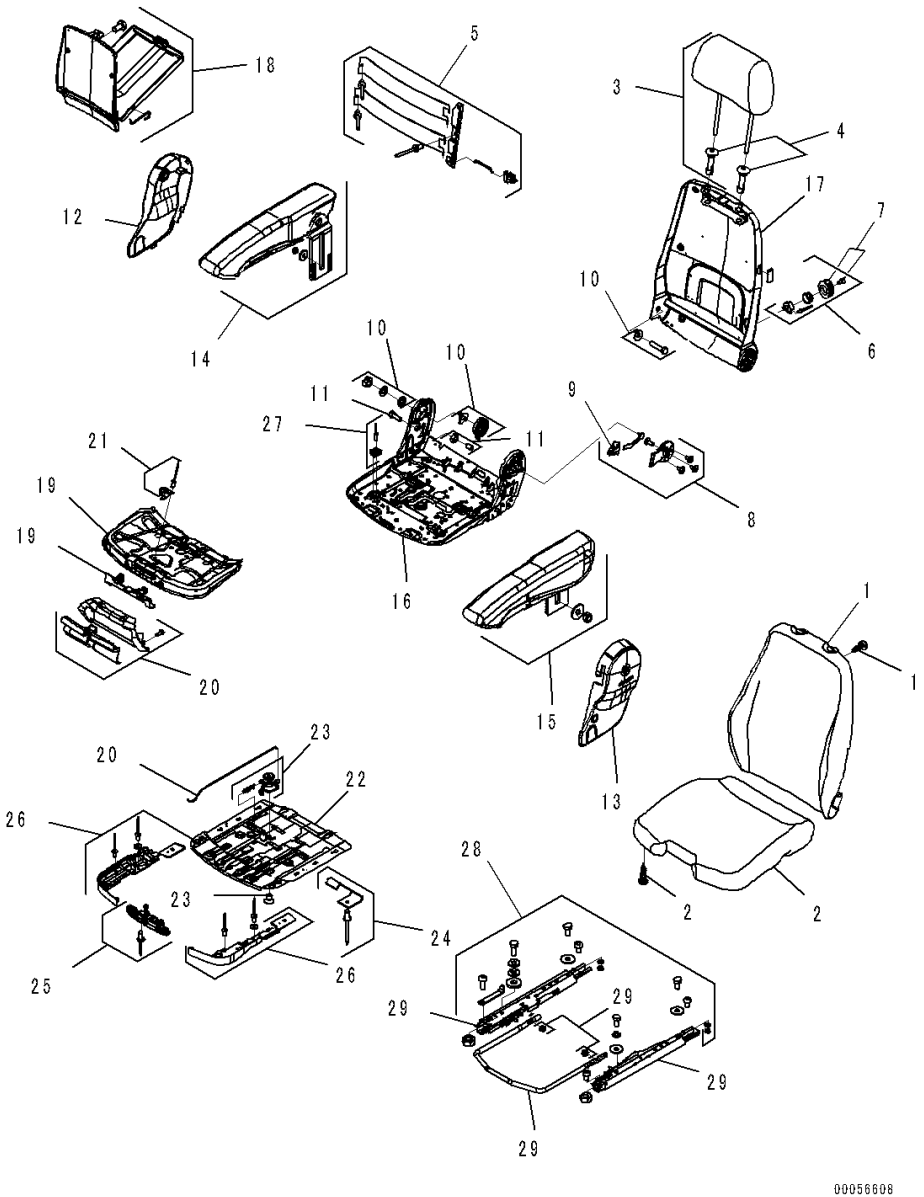

Index	Code	Part Number	Description	Qty	Serial Number
		425-S33-3513	Seat Assembly	1	90216-
		426-57-21413	• Seat Assembly	1	90216-
1		GJ2048193	• • Backrest, Cushion	1	90216-
2		GJ140988	• • Cushion, Seat	1	90216-
3		GJ142733	• • Extension, Extension	1	90216-
4		GJ136951	• • • Guide	1	90216-
5		GJ140678B	• • Support	1	90216-
6		GJ1091082	• • • Actuator	1	90216-
7		GJ140679	• • • • Handle Kit	1	90216-
8		GJ2046567	• • Actuator, Backrest	1	90216-
9		GJ140694	• • • Handle	1	90216-
10		GJ1091158	• • Bearing	1	90216-
11		GJ1091191	• • Stopper	1	90216-
12		GJ1088782	• • Cover	1	90216-
13		GJ1088780	• • Cover	1	90216-
14		GJ1023155	• • Arm Rest	1	90216-
15		GJ1023156	• • Arm Rest	1	90216-
16		GJ1091285	• • Frame, Seat Pan	1	90216-
17		GJ1091299	• • Frame, Backrest	1	90216-
18		GJ142259	• • Box	1	90216-
19		GJ1091397	• • Adjuster	1	90216-
20		GJ1091389	• • • Actuator	1	90216-
21		GJ139257	• • • Bracket	1	90216-
22		GJ1091503	• • Adjuster	1	90216-
23		GJ139246	• • • Lever	1	90216-
24		GJ1091428	• • • Bracket, Resilient Sheet	1	90216-
25		GJ139254	• • • Bracket	1	90216-
26		GJ139521	• • • Cover	1	90216-
27		GJ1091214	• • • Guide Kit	1	90216-
28		GJ1088777	• • Bolt Kit	1	90216-
29		GJ1091471	• • • Adjuster	1	90216-

FIG. K0110-002002 Operator's Seat (Grammer, With Joystick Steering System) (Inner Parts) (2/2)

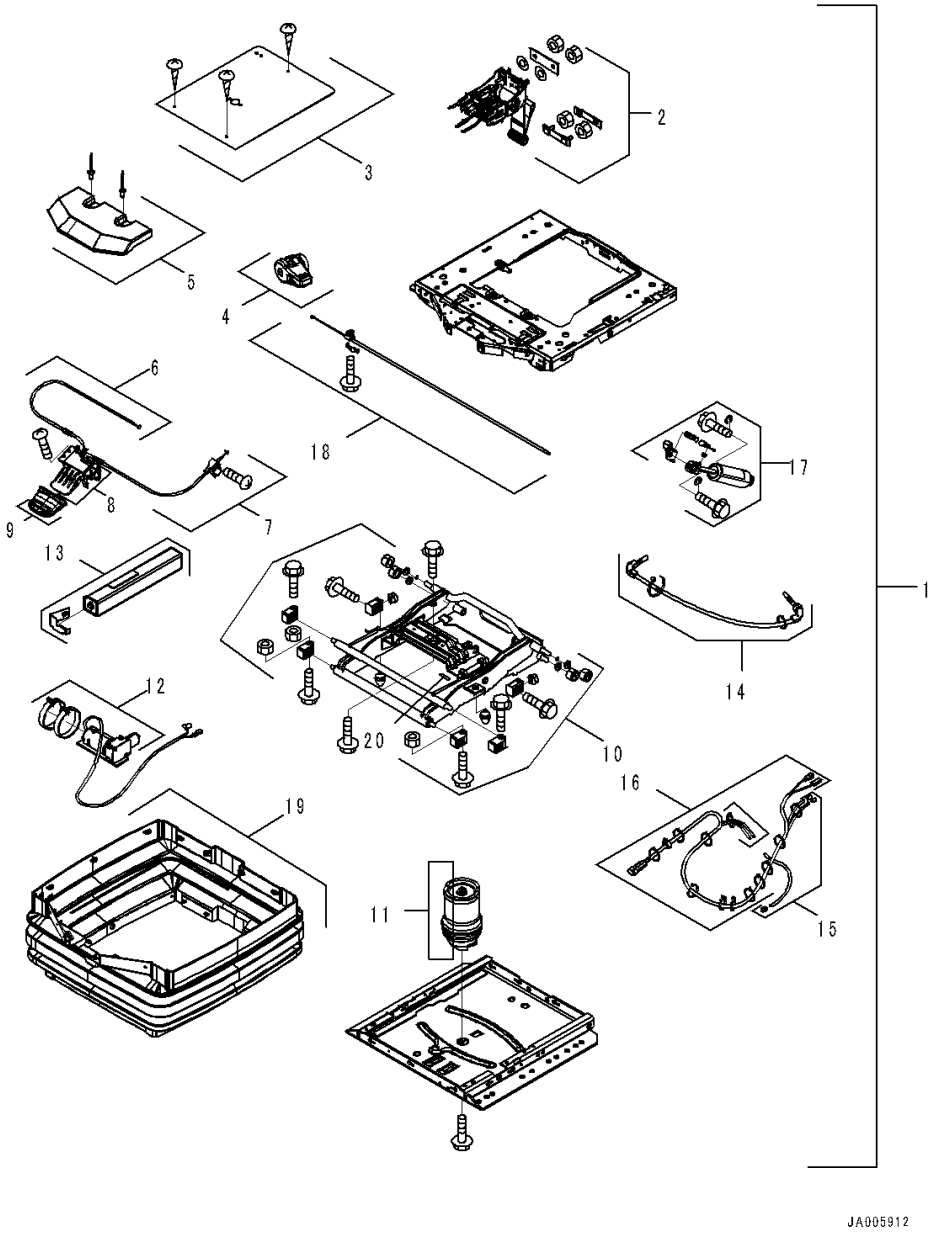

Index	Code	Part Number	Description	Qty	Serial Number
		425-S33-3513	Seat Assembly	1	90216-
		426-57-21413	• Seat Assembly	1	90216-
1		GJ1166395	• • Suspension	1	90216-
2		GJ1163323	• • • Controller	1	90216-
3		GJ1076975	• • • Cover	1	90216-
4		GJ1150900	• • • Handle	1	90216-
5		GJ1078590	• • • Cover	1	90216-
6		GJ1077152	• • • Cable	1	90216-
7		GJ1077153	• • • Cable	1	90216-
8		GJ131834	• • • Control	1	90216-
9		GJ138628	• • • • Handle	1	90216-
10		GJ1138023	• • • Set Of Wear Parts	1	90216-
11		GJ1081315	• • • Spring	1	90216-
12		GJ1096687	• • • Compressor	1	90216-
13		GJ1090447	• • • Reservoir	1	90216-
14		GJ1090779	• • • Hose, Air	1	90216-
15		GJ1096565	• • • Hose, Air	1	90216-
16		GJ1089165	• • • Cable	1	90216-
17		GJ1096588	• • • Absorber, Shock	1	90216-
18		GJ1150902	• • • Cable	1	90216-
19		GJ1079174	• • • Boot	1	90216-
20		GJ2046570	• • Trim	1	90216-

FIG. K0110-002003 Operator's Seat (Grammer, With Joystick Steering System) (Mounting)

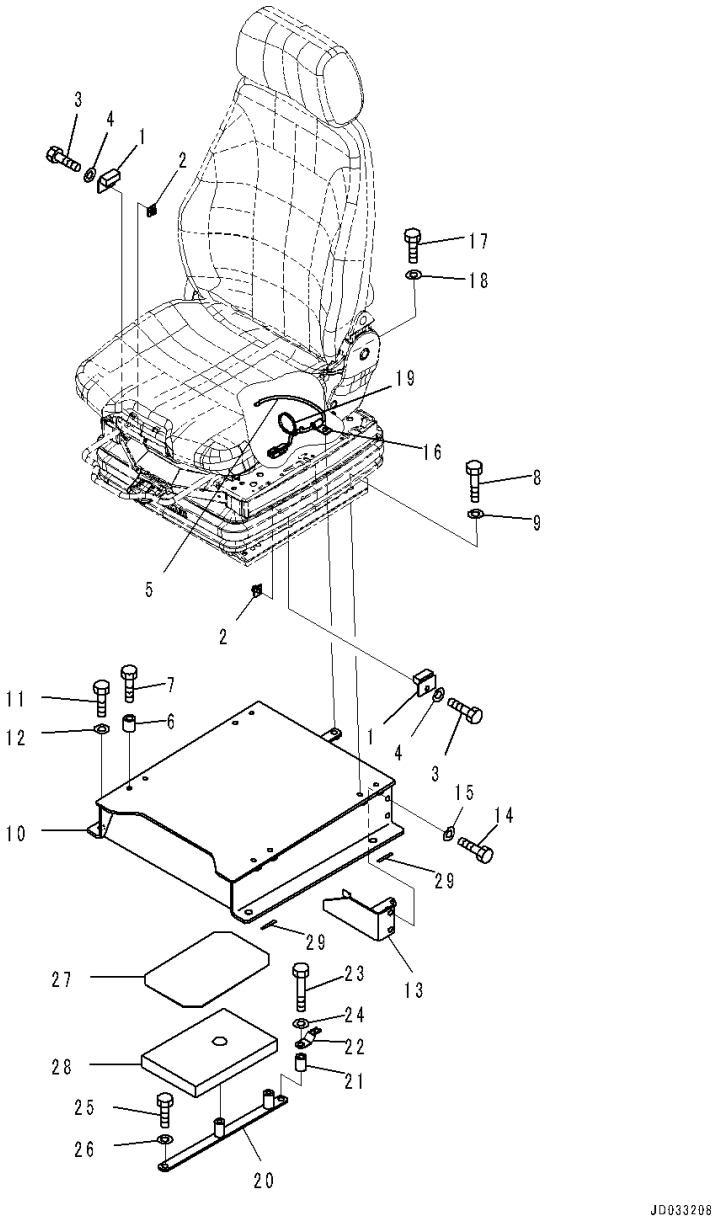

Index	Code	Part Number	Description	Qty	Serial Number
		425-S33-3513	Seat Assembly	1	90216-
1		428-S33-2752	• Spacer	2	90216-
2		428-S33-2760	• Plate	2	90216-
3		01010-80816	• Bolt	2	90216-
4		01643-30823	• Washer	2	90216-
5	C1		• Connector	1	90216-
6		11T-27-11180	Spacer	1	90216-
7		426-57-31140	Bolt	4	90745-
8		01010-D0835	Bolt	4	90216-
9		01643-70823	Washer	4	90216-
10		423-S33-4111	Bracket	1	90216-
11		01010-81230	Bolt	4	90216-
12		01643-51232	Washer	4	90216-
13		423-S33-4131	Bracket	1	90216-
14		01010-81025	Bolt	2	90216-
15		01643-31032	Washer	2	90216-
16		04434-50812	Clip	1	90216-
17		01010-81025	Bolt	1	90216-
18		01643-31032	Washer	1	90216-
19		08034-40521	Band	1	90216-
20		423-S33-4121	Bracket	1	90216-
21		427-03-10370	Spacer	1	90216-
22		08193-21012	Clip	1	90216-
23		01010-81060	Bolt	1	90216-
24		01643-31032	Washer	1	90216-
25		01010-81025	Bolt	1	90216-
26		01643-31032	Washer	1	90216-
27		423-S33-4260	Sheet	1	90216-
28		423-S33-4270	Sheet	1	90216-
29		421-57-31190	Shim, T=0.50mm	4	90216-

FIG. K0110-002004 Operator's Seat (Grammer, With Joystick Steering System) (Protector)

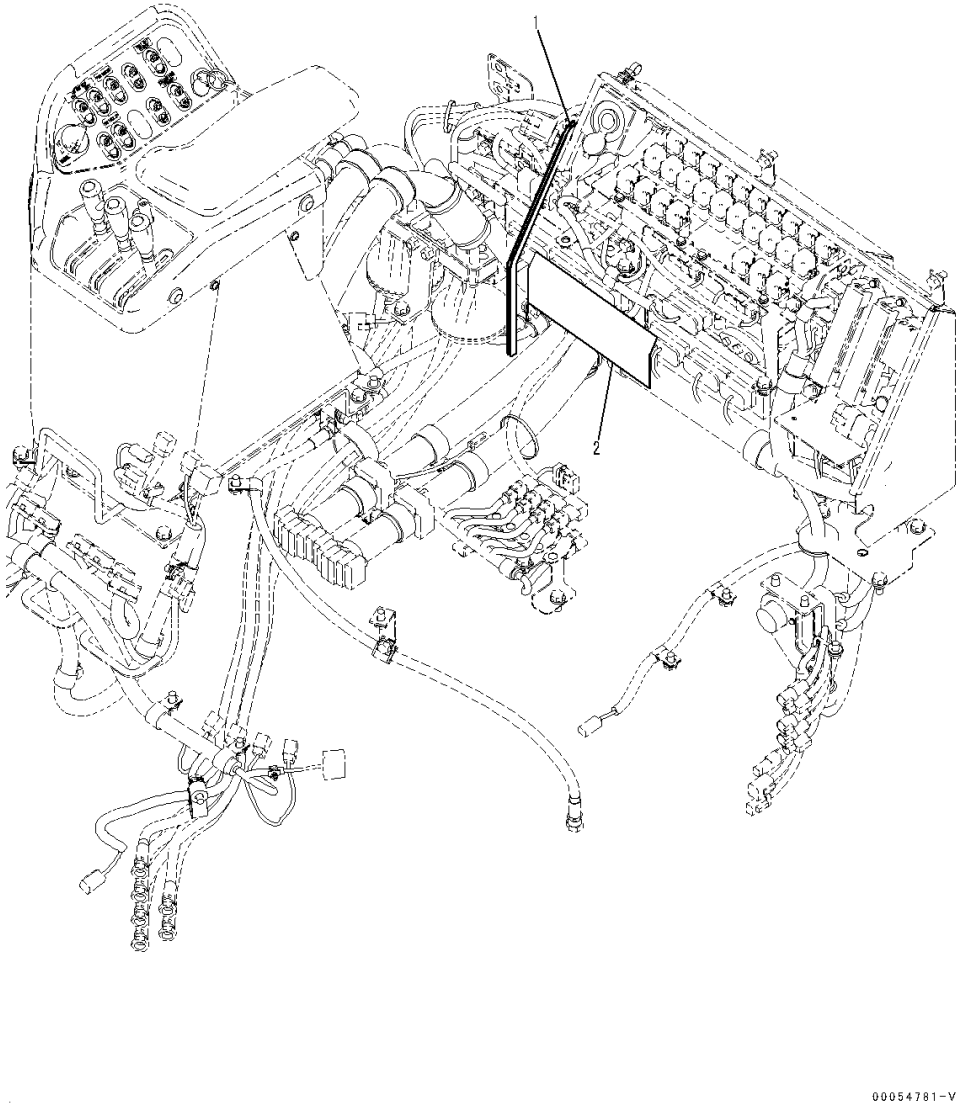

Index	Code	Part Number	Description	Qty	Serial Number
1		423-54-42670	Finisher	1	90216-
2		423-06-42740	Sheet	1	90216-

FIG. K0110-002005 Operator's Seat (Grammer, With Joystick Steering System) (Console) (1/2)

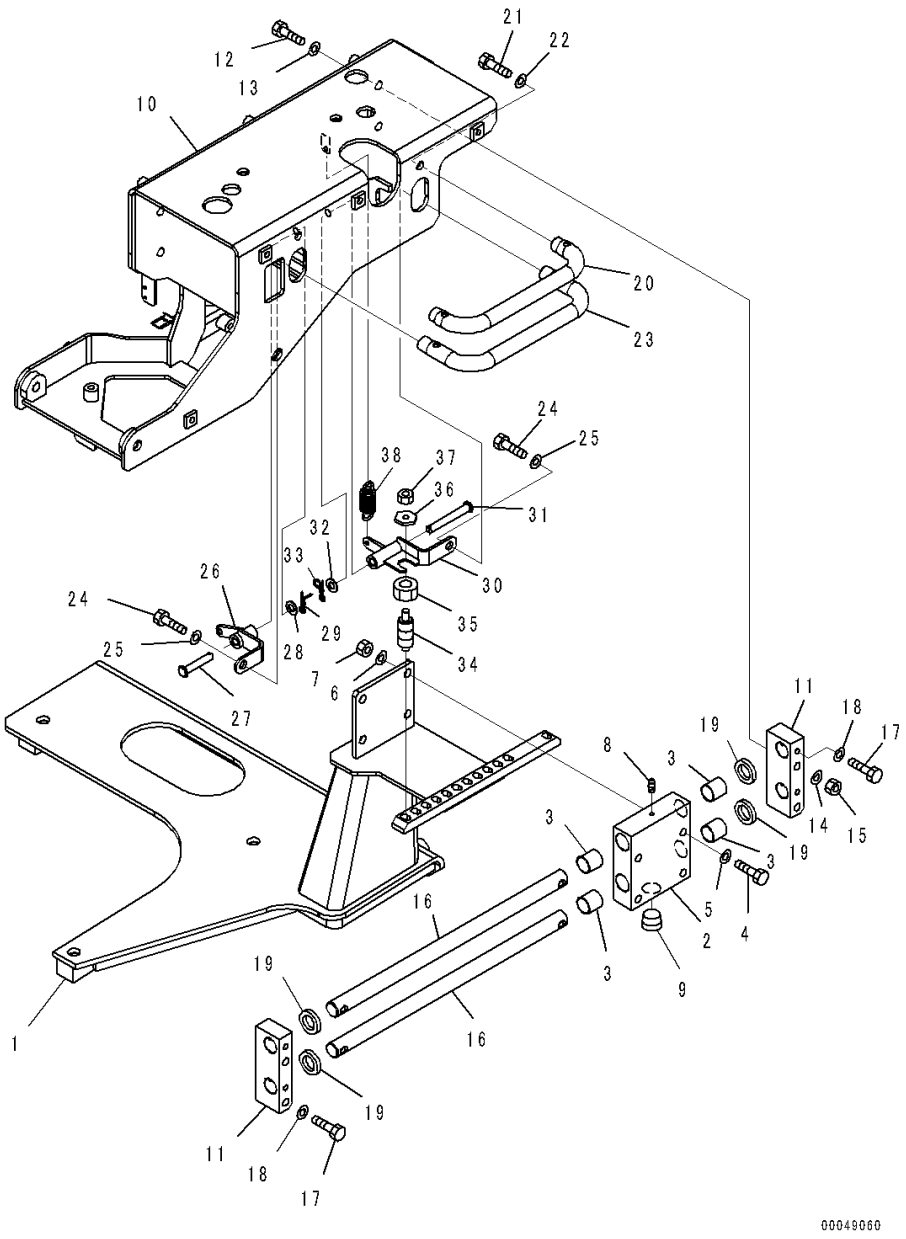

Index	Code	Part Number	Description	Qty	Serial Number
1		425-S33-3181	Bracket	1	90216-
2		425-S33-3461	Guide	1	90216-
3		426-40-32350	Bushing	4	90216-
4		01010-80850	Bolt	4	90216-
5		01643-30823	Washer	4	90216-
6		01643-30823	Washer	4	90216-
7		01580-10806	Nut	4	90216-
8		07020-00001	Fitting, Grease	1	90216-
9		07043-70415	Plug	1	90216-
10		425-S33-3311	Bracket	1	90216-
11		426-40-32481	Guide	2	90216-
12		01010-80855	Bolt	4	90216-
13		01643-30823	Washer	4	90216-
14		01643-30823	Washer	4	90216-
15		01580-10806	Nut	4	90216-
16		425-S33-3231	Rod	2	90216-
17		01010-80635	Bolt	4	90216-
18		01643-30623	Washer	4	90216-
19		426-40-32360	Packing	4	90216-
20		425-S33-3250	Handle	1	90216-
21		01010-80820	Bolt	2	90216-
22		01643-30823	Washer	2	90216-
23		425-S33-3260	Handle	1	90216-
24		01010-80820	Bolt	2	90216-
25		01643-30823	Washer	2	90216-
26		425-S33-3280	Lever	1	90216-
27		154-61-16930	Pin	1	90216-
28		01641-20812	Washer	1	90216-
29		04052-20833	Pin, Snap	1	90216-
30		425-S33-3240	Lever	1	90216-
31		198-911-2550	Pin	1	90216-
32		01641-20812	Washer	1	90216-
33		04052-20833	Pin, Snap	1	90216-
34		426-43-38250	Plunger	1	90216-
35		01583-11610	Nut	1	90216-
36		426-43-38262	Nut	1	90216-
37		01580-10806	Nut	1	90216-
38		112-961-2260	Spring	1	90216-

FIG. K0110-002006 Operator's Seat (Grammer, With Joystick Steering System) (Console) (2/2)

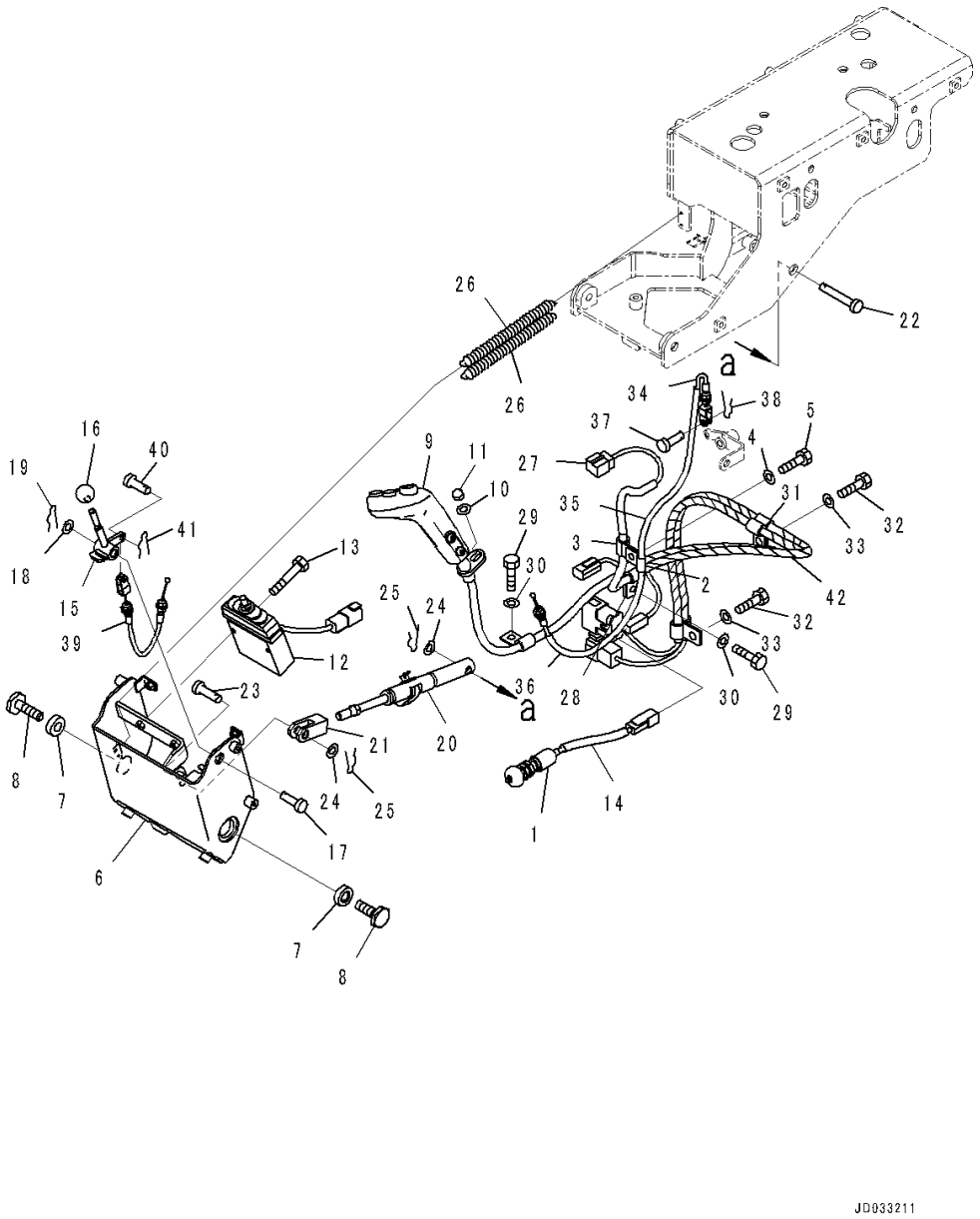

Index	Code	Part Number	Description	Qty	Serial Number
1		421-S33-3282	Switch, Parking Brake Lever	1	90216-
2		04434-50508	Clip	1	90216-
3		04434-51008	Clip	1	90216-
4		01010-80816	Bolt	1	90216-
5		01643-30823	Washer	1	90216-
6		425-S33-3323	Bracket	1	90216-
7		22T-43-12180	Spacer	2	90216-
8		425-S33-3290	Bolt	2	90216-
9		425-S33-3534	Knob Assembly	1	90793-
10		01643-70823	Washer	1	90216-
11		01546-10812	Nut	1	90216-
12		702-16-02150	Lever Assembly	1	90216-
13		01435-00640	Bolt	2	90216-
14		08017-C0701	Conduit	1	90216-
15		425-S33-3272	Lever	1	90216-
16		22T-55-15290	Knob	1	90216-
17		04205-31042	Pin	1	90216-
18		01640-21016	Washer	1	90216-
19		04052-21038	Pin, Snap	1	90216-
20		425-S33-3490	Lock	1	90216-
21		22T-43-11210	• Yoke	1	90216-
22		8236-71-2450	Pin	1	90216-
23		04205-31042	Pin	1	90216-
24		01640-21016	Washer	2	90216-
25		04052-21038	Pin, Snap	2	90216-
26		418-43-18240	Spring	2	90216-
27		425-S33-3192	Wiring Harness	1	90216-
28		04434-51008	Clip	3	90216-
29		01010-80816	Bolt	2	90216-
30		01643-30823	Washer	2	90216-
31		04434-51010	Clip	4	90216-
32		01010-D1020	Bolt	2	90216-
33		01643-71032	Washer	2	90216-
34		425-S33-3333	Cable	1	90216-
35		08017-C0701	Conduit	1	90216-
36		08017-C0703	Conduit	1	90216-
37		04205-10616	Pin	1	90216-
38		04052-20633	Pin, Snap	1	90216-
39		425-S33-3342	Cable	1	90216-
40		04205-10616	Pin	1	90216-

FIG. K0110-002006 Operator's Seat (Grammer, With Joystick Steering System) (Console) (2/2)

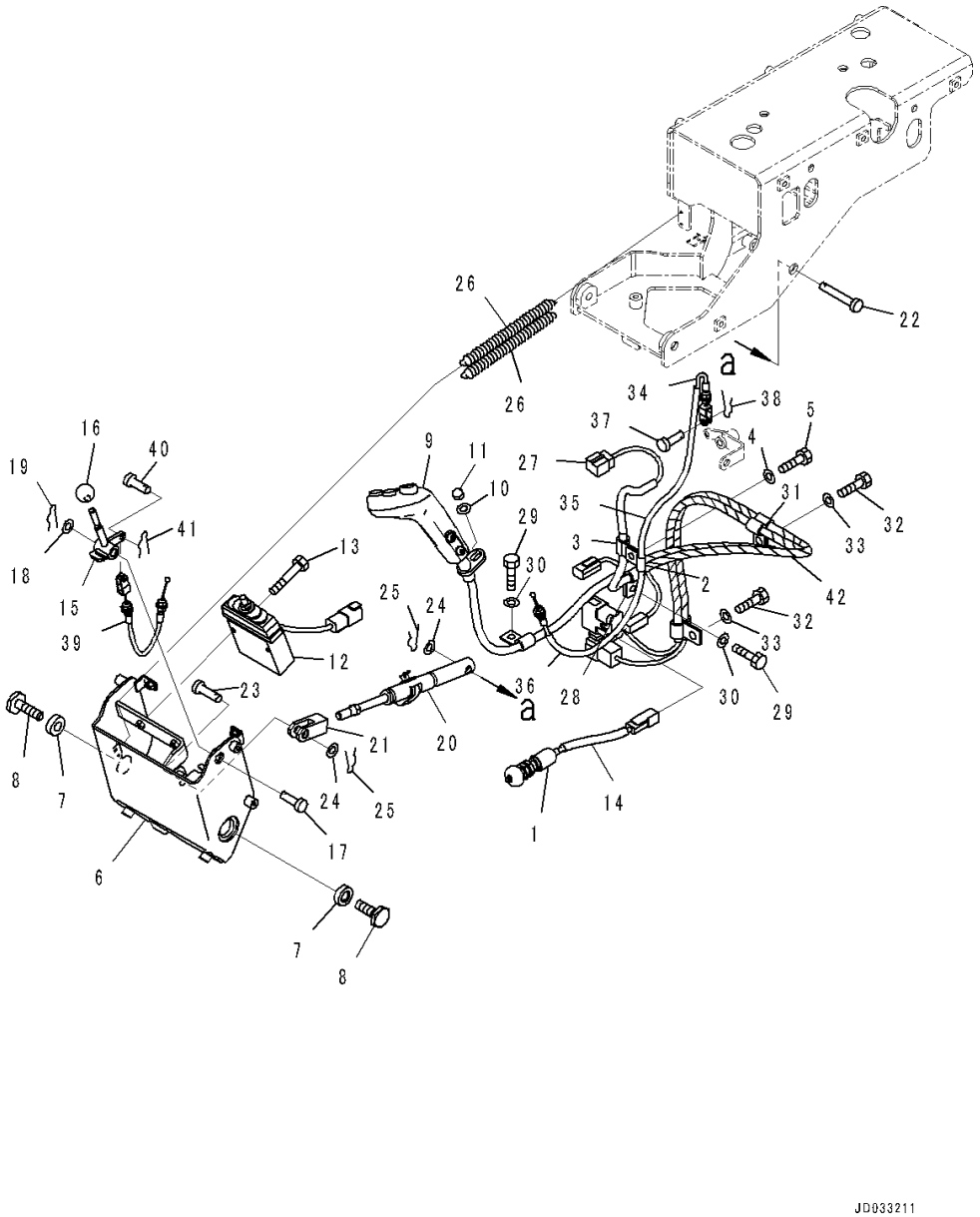

Index	Code	Part Number	Description	Qty	Serial Number
41		04052-20633	Pin, Snap	1	90216-
42		08210-01805	Tube, Spiral	2	90216-

FIG. K0110-002007 Operator's Seat (Grammer, With Joystick Steering System) (Cover)

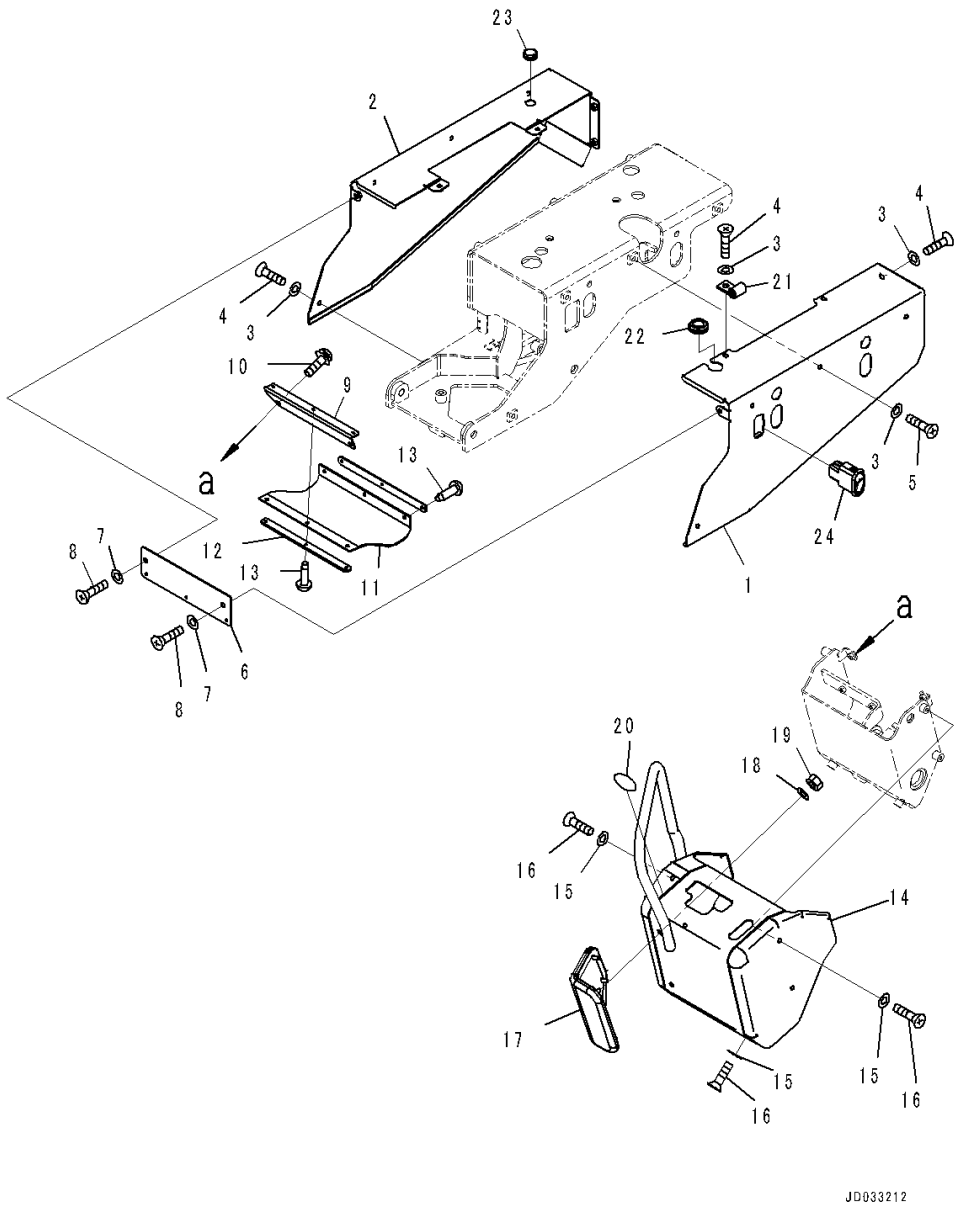

Index	Code	Part Number	Description	Qty	Serial Number
1		425-S33-3372	Cover, L.H.	1	90216-
2		425-S33-3381	Cover, R.H.	1	90216-
3		23S-55-51970	Washer	12	90216-
4		01225-70616	Screw, Philips Head	8	90216-
5		01225-70620	Screw, Philips Head	4	90216-
6		425-S33-3390	Plate	1	90216-
7		23S-55-51970	Washer	2	90216-
8		01225-70616	Screw, Philips Head	2	90216-
9		425-S33-3410	Plate	1	90216-
10		01023-20612	Screw	2	90216-
11		425-S33-3420	Rubber	1	90216-
12		425-S33-3430	Plate	2	90216-
13		362-56-41740	Rivet	6	90216-
14		425-S33-3563	Cover	1	90216-
15		23S-55-51970	Washer	6	90216-
16		01225-70616	Screw, Philips Head	6	90216-
17		425-S33-3571	Pad	1	90216-
18		01640-20508	Washer	4	90216-
19		01580-10504	Nut	4	90216-
20		426-93-43430	Plate, AJSS Operating Pattern	1	90216-
21		04434-51008	Clip	1	90216-
22		08037-01610	Grommet	1	90216-
23		09415-01008	Cap	1	90216-
24		425-06-33650	Switch, Joy Stick, ON-OFF	1	90216-

FIG. K0110-002008 Operator's Seat (Grammer, With Joystick Steering System) (Armrest)

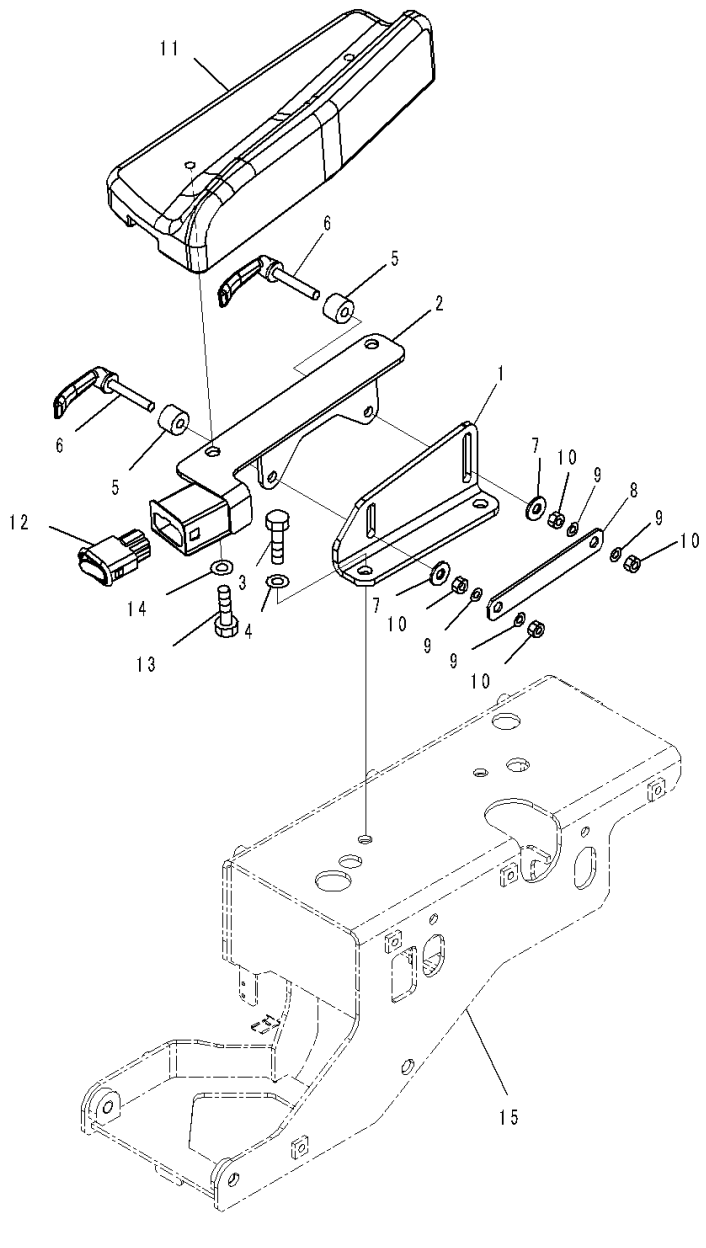

Index	Code	Part Number	Description	Qty	Serial Number
1		425-S33-3450	Bracket	1	90216-
2		425-S33-3440	Bracket	1	90216-
3		01010-D1025	Bolt	2	90216-
4		01643-71032	Washer	2	90216-
5		425-43-31110	Spacer	2	90216-
6		423-43-38170	Lever	2	90216-
7		154-61-16570	Washer	2	90216-
8		425-S33-3470	Plate	1	90216-
9		01643-30823	Washer	4	90216-
10		01580-10806	Nut	4	90216-
11		425-S33-3352	Arm Rest	1	90216-
12		423-06-45580	Switch, Speed Selector	1	90216-
13		01010-D1020	Bolt	2	90216-
14		01643-71032	Washer	2	90216-
15		(425-S33-3311)	Bracket(Refer to Page 522)		-

FIG. K0110-001001 Operator's Seat (Air Suspension Type, Deluxe Type, Lumbar Support) (Inner Parts)

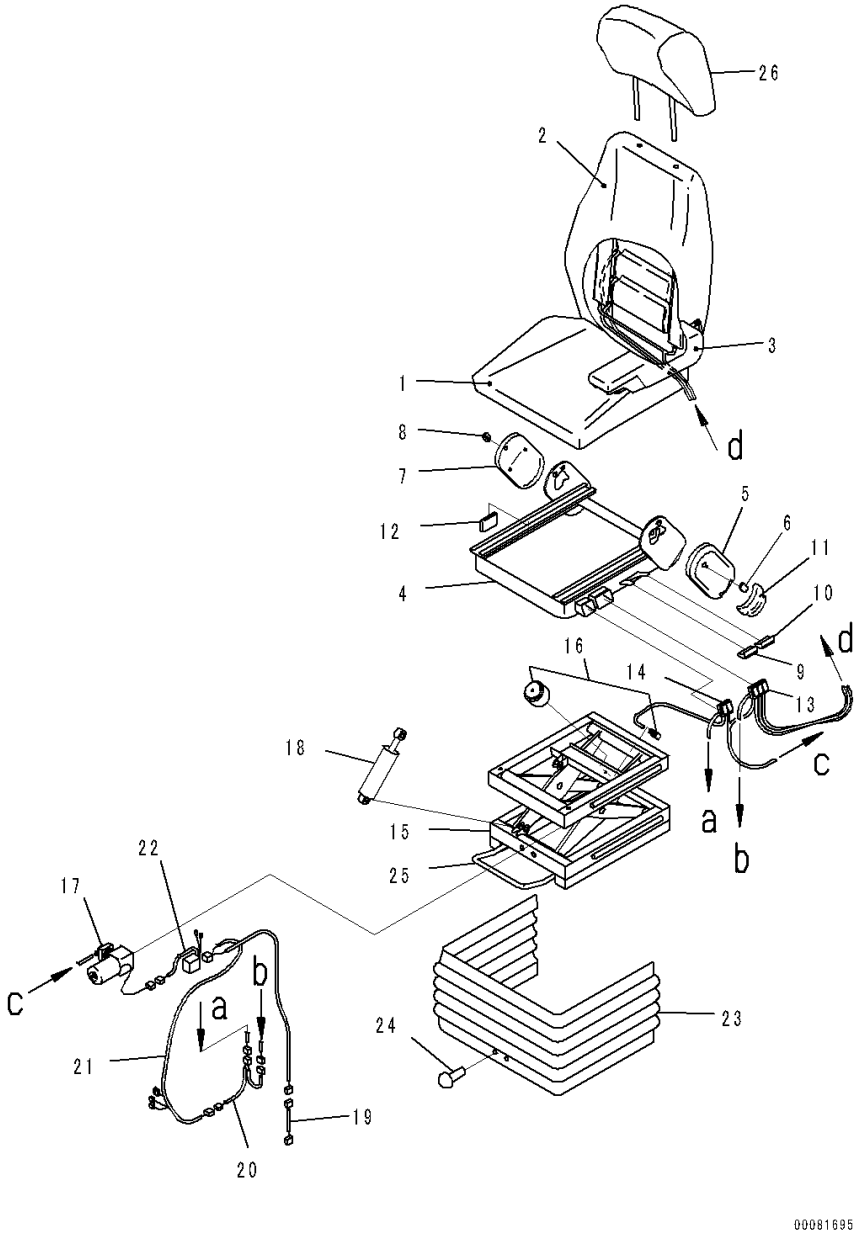

Index	Code	Part Number	Description	Qty	Serial Number
		421-57-41110	Seat Assembly	1	90216-
1		421-57-31510	• Cushion	1	90216-
2		421-57-31520	• Backrest	1	90216-
3		421-57-31541	• Armrest	1	90216-
4		421-57-31550	• Lifter Assembly	1	90216-
		421-57-31620	• • Cover Assembly	1	90216-
5		421-57-31630	• • • Cover, L.H.	1	90216-
6		421-57-31820	• • • Cap	1	90216-
7		421-57-31640	• • • Cover, R.H.	1	90216-
8		421-57-31820	• • • Cap	1	90216-
		421-57-31650	• • Knob Assembly	1	90216-
9		421-57-31660	• • • Knob, Tilt, Front	1	90216-
10		421-57-31670	• • • Knob, Tilt, Rear	1	90216-
11		421-57-31680	• • • Knob, Reclining	1	90216-
12		421-57-31690	• • • Knob, Slide	1	90216-
13		421-57-31740	• • Switch, Lumber	1	90216-
14		421-57-31750	• • Switch, Air Suspension	1	90216-
15		421-57-31560	• Suspension Assembly	1	90216-
16		421-57-31710	• • Spring Assembly	1	90216-
17		421-57-31720	• • Compressor Assembly	1	90216-
18		421-57-31730	• • Damper	1	90216-
		421-57-31760	• • Wiring Harness Assembly	1	90216-
19		421-57-31770	• • • Wiring Harness	1	90216-
20		421-57-31780	• • • Wiring Harness	1	90216-
21		421-57-31790	• • • Wiring Harness	1	90216-
22		421-57-31810	• • Relay	1	90216-
23		421-57-31570	• Cover	1	90216-
24		421-57-31580	• Clip	8	90216-
25		421-57-31590	• Adjuster, Seat	1	90216-
26		421-57-31610	• Headrest	1	90216-

FIG. K0110-001002 Operator's Seat (Air Suspension Type, Deluxe Type, Lumbar Support) (Mounting)

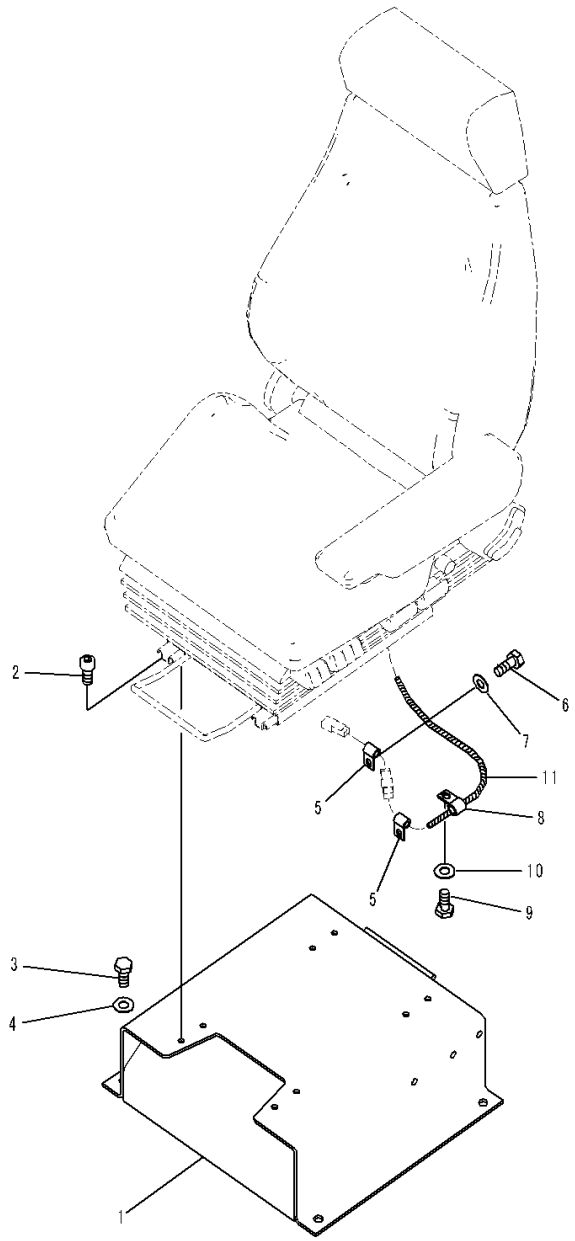

Index	Code	Part Number	Description	Qty	Serial Number
1		423-54-42512	Bracket	1	90216-
2		01252-70820	Bolt	4	90216-
3		01010-81230	Bolt	4	90216-
4		01643-31232	Washer	4	90216-
5		04434-51010	Clip	2	90216-
6		01010-81020	Bolt	2	90216-
7		01643-31032	Washer	2	90216-
8		04434-51410	Clip	1	90216-
9		01010-81016	Bolt	1	90216-
10		01643-31032	Washer	1	90216-
11		08017-C1001	Conduit	1	90216-

FIG. K0160-005001 Seat Belt (50mm, 2-point Type, Suspension Type Grammer Operator's Seat)

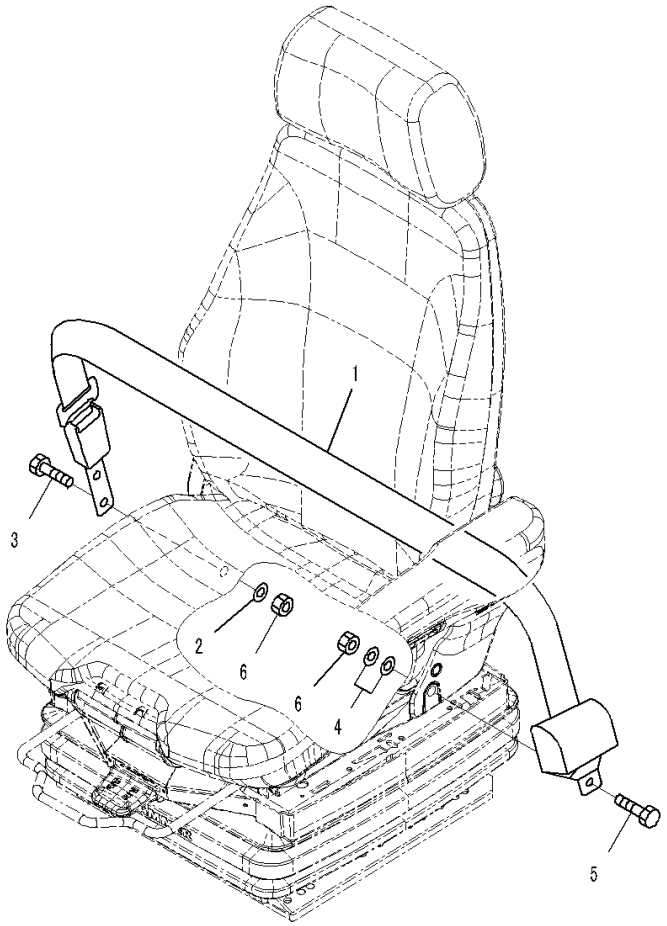

Index	Code	Part Number	Description	Qty	Serial Number
1		17A-57-21201	Seat Belt, Lap	1	90216-
2		01643-51232	Washer	1	90216-
3		02030-70729	Bolt, Unified	1	90216-
4		01643-51232	Washer	2	90216-
5		02030-70729	Bolt, Unified	1	90216-
6		02215-10710	Nut	2	90216-

FIG. K0160-001001 Seat Belt (50mm, 2-point Type, Suspension Type Operator's Seat, With Operator's Seat, Suspension Type, Reclining)

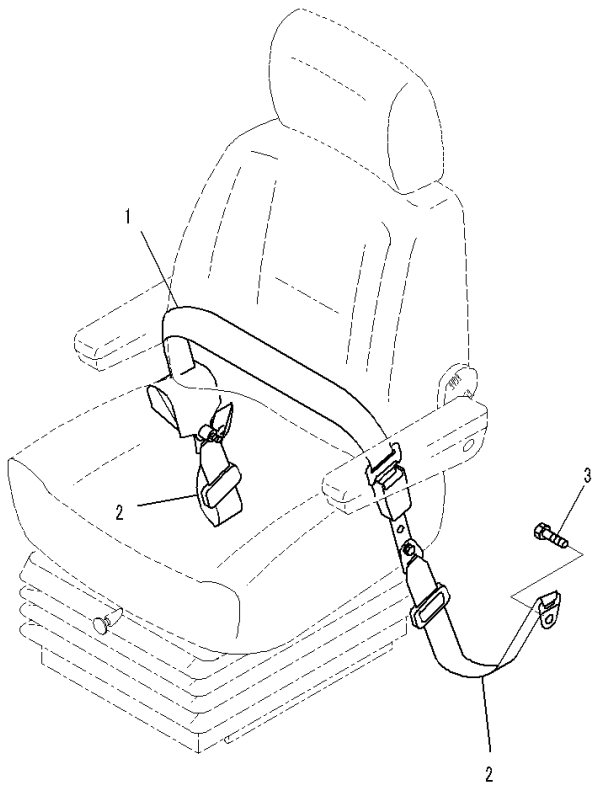

Index	Code	Part Number	Description	Qty	Serial Number
1		17A-57-21201	Seat Belt, Lap	1	90216-
2		17A-57-21221	Belt, Tether	2	90216-
3		02030-70719	Bolt, Unified	2	90216-

FIG. K0160-003001 Seat Belt (50mm, 2-point Type, Suspension Type Operator's Seat, With Operator's Seat, Air Suspension Type, Deluxe Type, Lumbar Support)

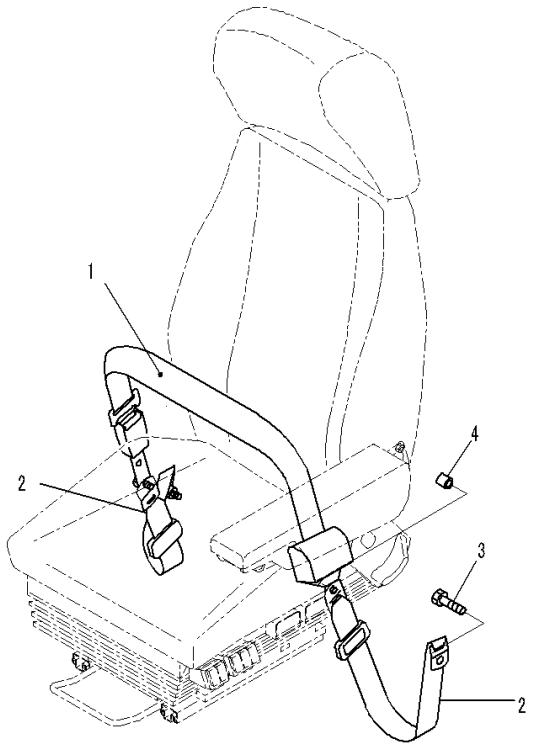

00040624

Index	Code	Part Number	Description	Qty	Serial Number
1		421-57-31130	Seat Belt Kit, Kab	1	90216-
2		17A-57-21221	Belt, Tether	2	90216-
3		02030-70719	Bolt, Unified	2	90216-
4		104-890-5610	Collar	3	90216-

FIG. K0160-002001 Seat Belt (78mm, 2-point Type, Suspension Type Operator's Seat)

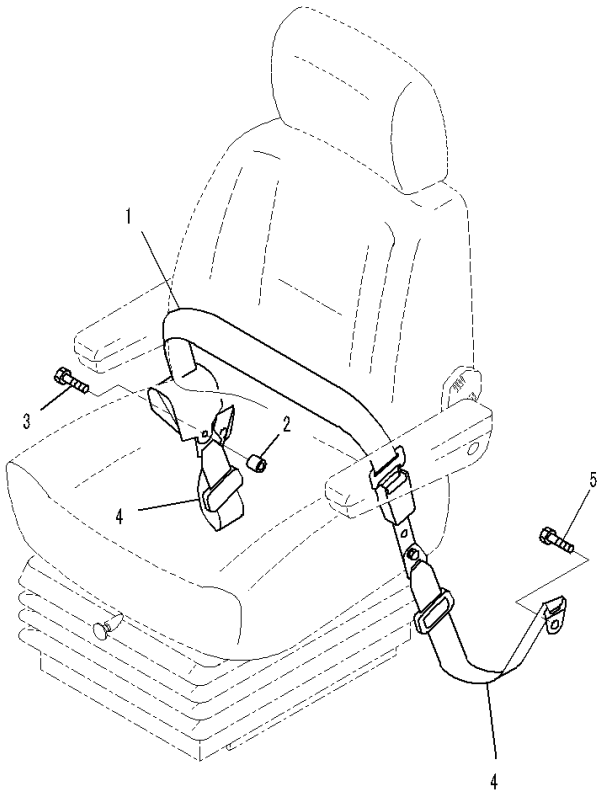

Index	Code	Part Number	Description	Qty	Serial Number
1		09409-70000	Seat Belt	1	90216-
2		104-890-5610	Collar	1	90216-
3		02030-70744	Bolt, Unified	1	90216-
4		17A-57-21221	Belt, Tether	2	90216-
5		02030-70719	Bolt, Unified	2	90216-

FIG. K0160-006001 Seat Belt (78mm, 2-point Type, Suspension Type Grammer Operator's Seat)

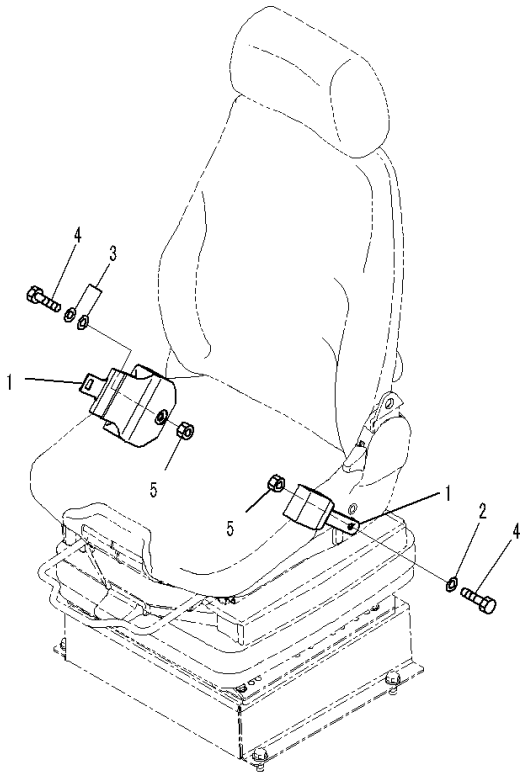

Index	Code	Part Number	Description	Qty	Serial Number
1		20Y-57-A1661	Seat Belt, Lap	1	90216-
2		01643-51232	Washer	1	90216-
3		01643-51232	Washer	2	90216-
4		02030-70729	Bolt, Unified	2	90216-
5		02215-10710	Nut	2	90216-

FIG. K0160-004001 Seat Belt (78mm, 2-point, Retractable Type, Suspension Type Operator's Seat)

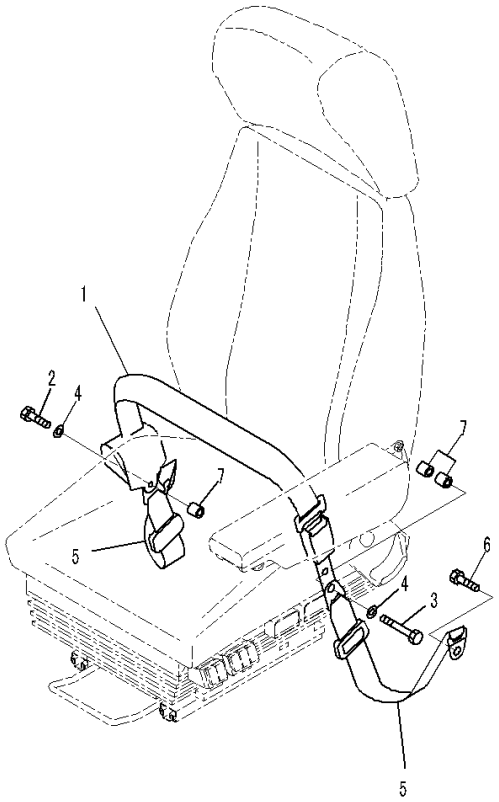

Index	Code	Part Number	Description	Qty	Serial Number
1		09409-70000	Seat Belt	1	90216-
2		02030-70744	Bolt, Unified	1	90216-
3		02030-70764	Bolt, Unified	1	90216-
4		01643-31232	Washer	2	90216-
5		17A-57-21221	Belt, Tether	2	90216-
6		02030-70719	Bolt, Unified	2	90216-
7		104-890-5610	Collar	3	90216-

FIG. K0210-024001 ROPS Cab (Body)

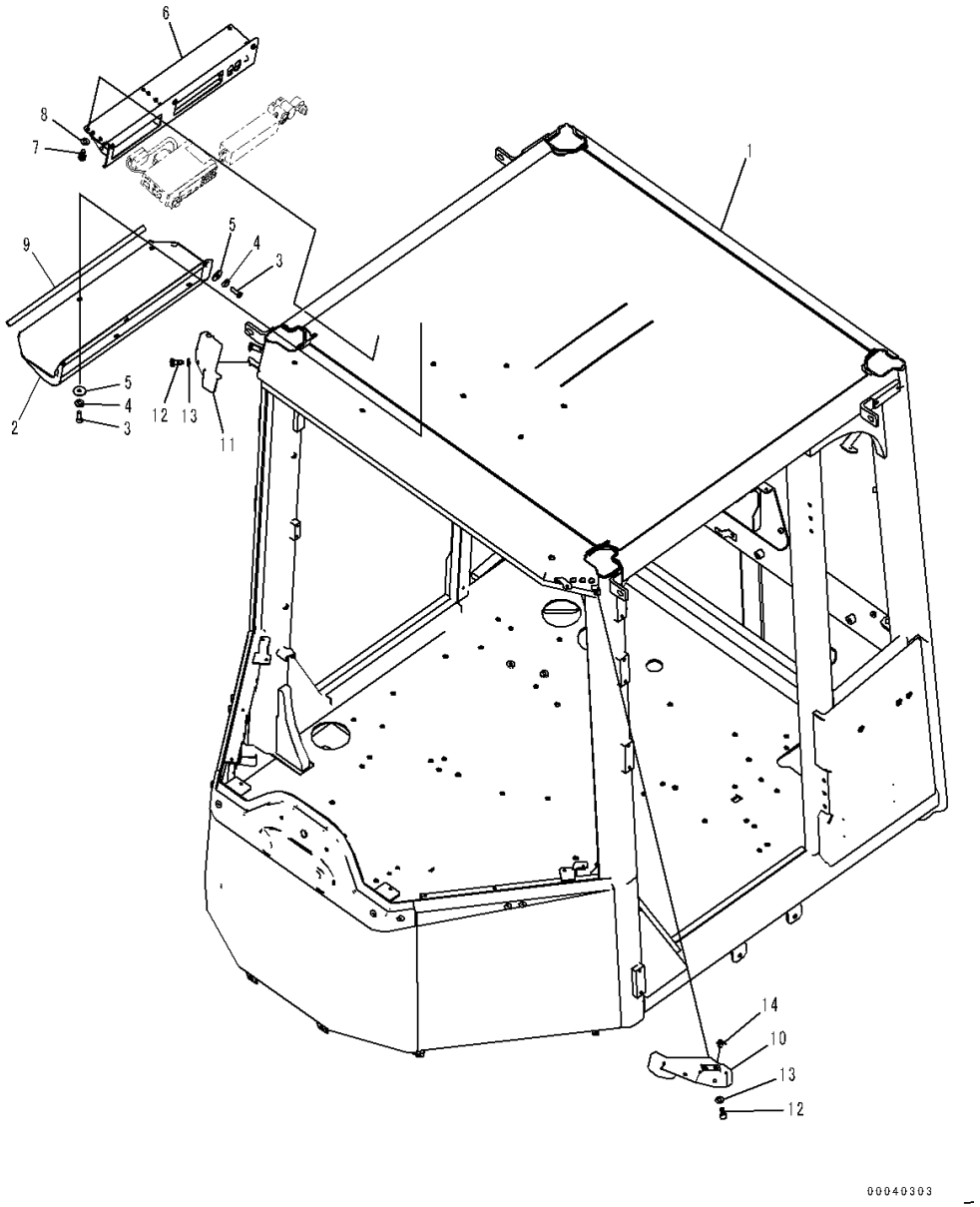

Index	Code	Part Number	Description	Qty	Serial Number
		Note: This list covers following specifications.			
		L.H. Door Sash Window			
		L.H. Door Sash Window, With Auto Air Conditioner			
		Both Sash Window			
		Both Sash Window, For EU Safety Regulation			
		Both Sash Window, With Auto Air Conditioner			
1		421-926-4112	ROPS Cab	1	91202-
2		418-925-3450	Cover	1	91202-
3		01225-70620	Screw, Philips Head	8	91202-
4		418-926-3490	Washer	8	91202-
5		423-925-4620	Washer	8	91202-
6		423-926-4823	Bracket	1	91202-
7		01010-80616	Bolt	6	91202-
8		01643-30623	Washer	6	91202-
9		425-925-3580	Seal	1	91202-
10		423-926-4533	Cover, L.H.	1	91202-
11		423-926-4542	Cover, R.H.	1	91202-
12		01010-80612	Bolt	4	91202-
13		01643-30623	Washer	4	91202-
14		426-56-21990	Plug	2	91202-

FIG. K0210-024002 ROPS Cab (Door, L.H.)

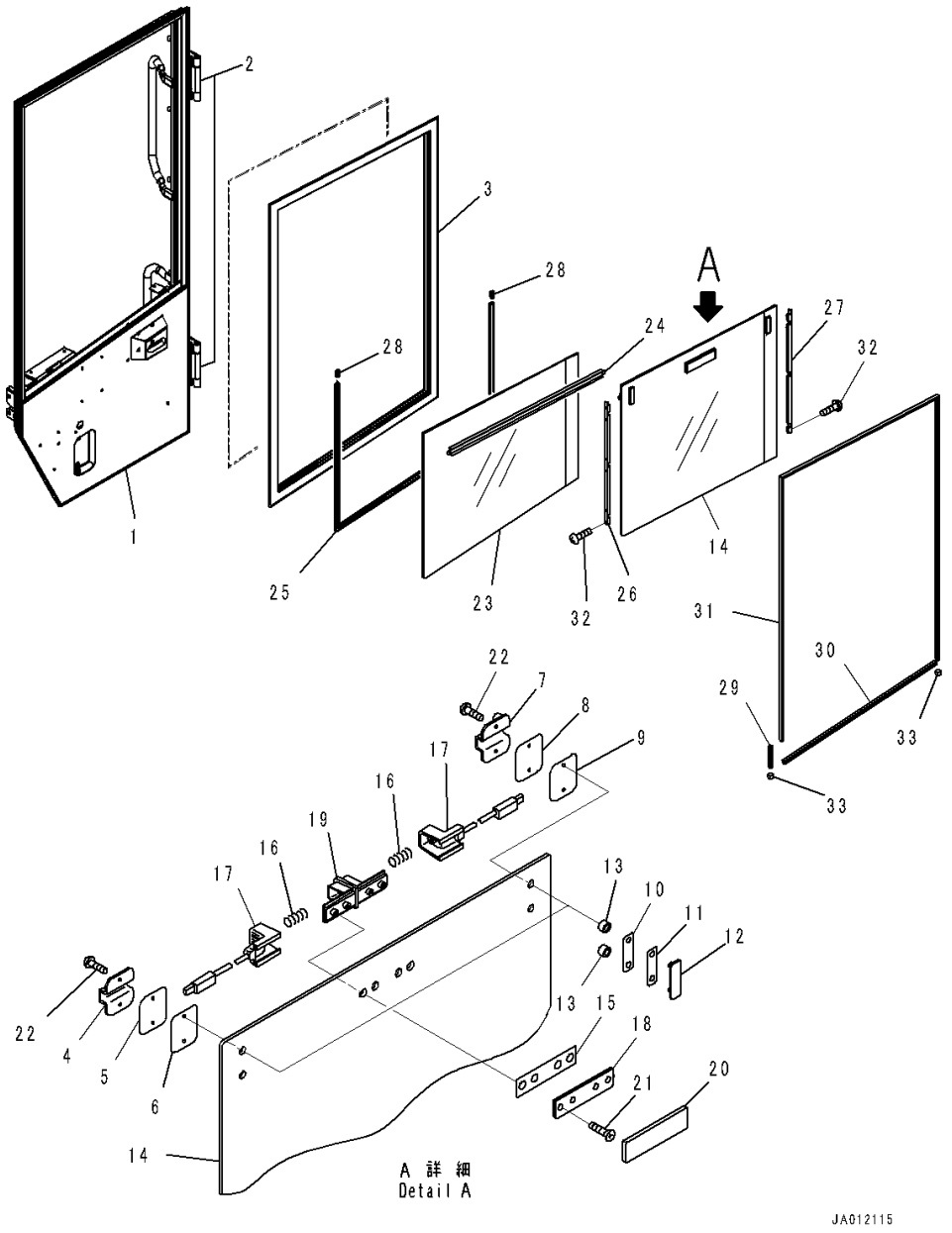

Index	Code	Part Number	Description	Qty	Serial Number
		Note: This list covers following specifications.			
		L.H. Door Sash Window			
		L.H. Door Sash Window, With Auto Air Conditioner			
		Both Sash Window			
		Both Sash Window, For EU Safety Regulation			
		Both Sash Window, With Auto Air Conditioner			
1		423-925-4115	Door	1	91202-
2		14X-911-1330	• Hinge, Welded	2	91202-
		423-925-4135	Sash Assembly	1	91202-
3		421-925-4610	• Frame	1	91202-
		421-925-4642	• Glass Assembly	1	91202-
4		421-925-4920	• • Holder Assembly	1	91202-
5		423-925-3780	• • • Packing	1	91202-
6		423-925-3790	• • • Packing	1	91202-
7		421-925-4930	• • Holder Assembly	1	91202-
8		423-925-3780	• • • Packing	1	91202-
9		423-925-3790	• • • Packing	1	91202-
10		421-925-5950	• • Packing	2	91202-
11		421-925-5960	• • Packing	2	91202-
12		423-925-3810	• • Retainer	2	91202-
13		421-925-4940	• • Tube	4	91202-
14		421-925-4671	• • Glass	1	91202-
		421-925-4860	• • Lock Assembly	1	91202-
15		423-925-3850	• • • Packing	1	91202-
16		423-925-3860	• • • Spring	2	91202-
17		421-925-4870	• • • Lever	2	91202-
18		423-925-3880	• • • Retainer	1	91202-
19		423-925-3940	• • • Base	1	91202-
20		423-925-3950	• • • Cover	1	91202-
21		423-925-3990	• • • Screw	4	91202-
22		421-925-5970	• • Screw	4	91202-
23		421-925-4711	• Glass	1	91202-
24		421-925-4750	• Run Channel	1	91202-
25		421-925-4760	• Rubber	1	91202-
26		421-925-4780	• Catcher	1	91202-
27		421-925-4790	• Catcher	1	91202-
28		421-925-4830	• Rubber	2	91202-
29		421-925-4840	• Rubber	1	91202-
30		421-925-4850	• Rubber	1	91202-
31		421-925-4740	• Run Channel	1	91202-

FIG. K0210-024002 ROPS Cab (Door, L.H.)

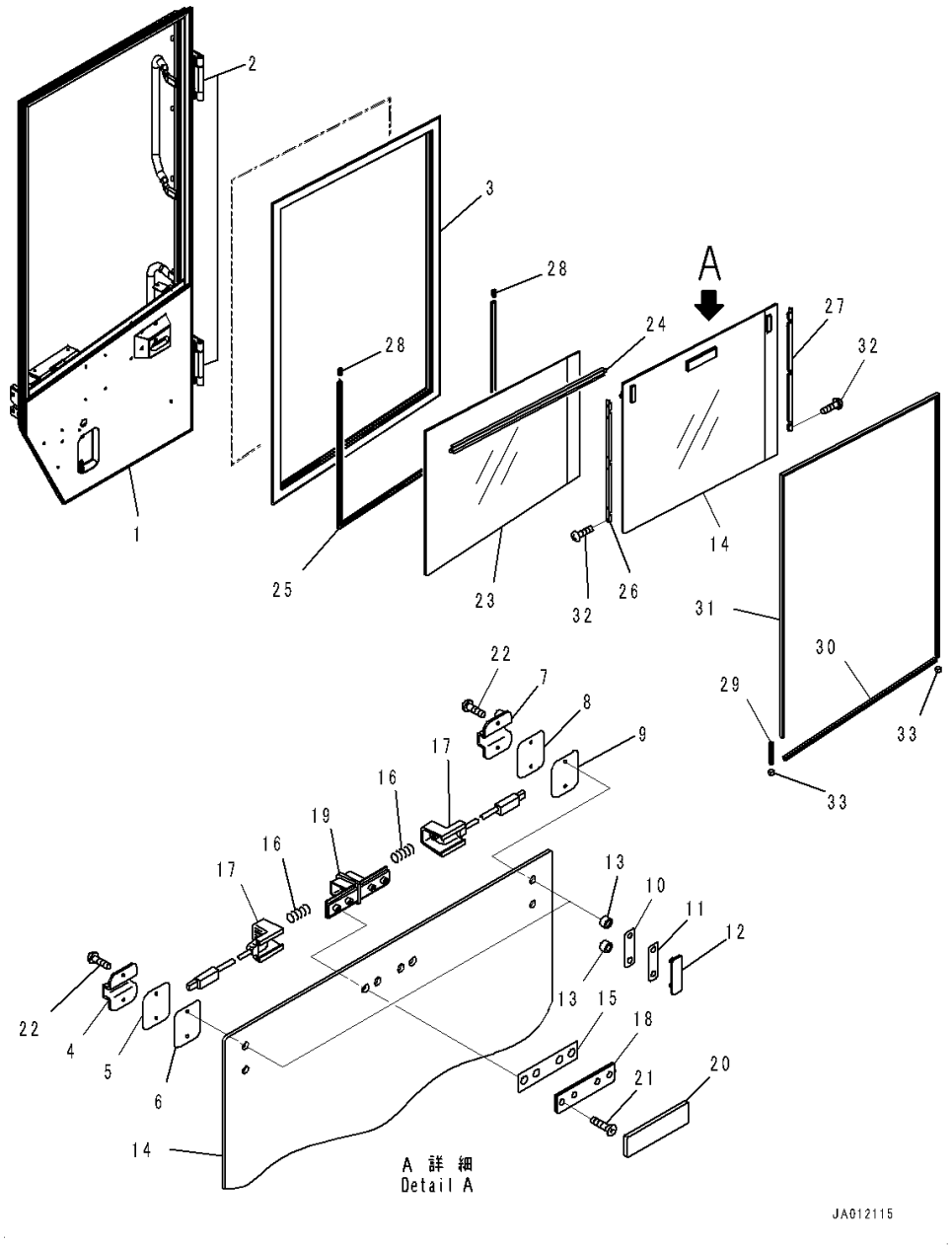

Index	Code	Part Number	Description	Qty	Serial Number
32		423-925-3960	• Screw	12	91202-
33		421-925-4910	• Seal	2	91202-

FIG. K0210-024003 ROPS Cab (Door Lock, L.H.)

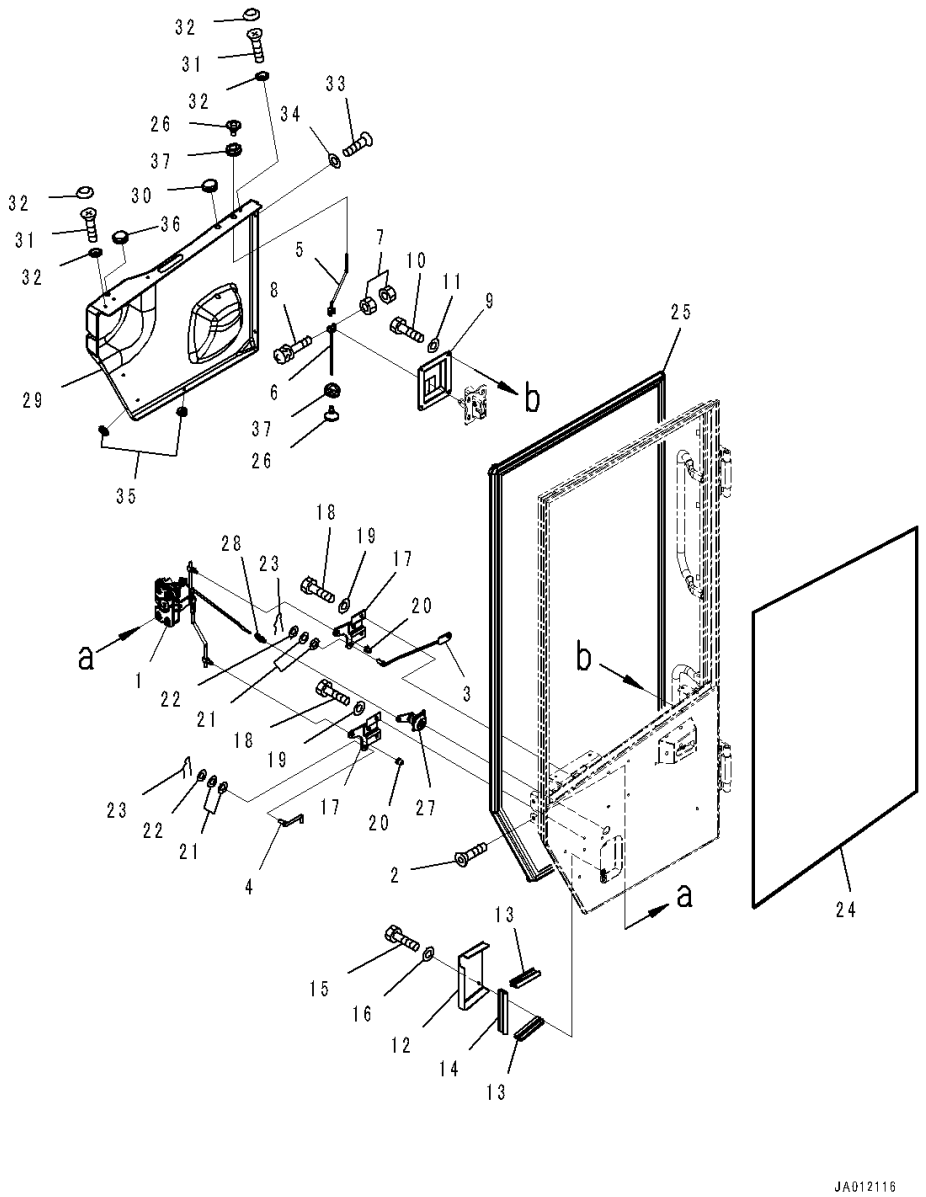

Index	Code	Part Number	Description	Qty	Serial Number
		Note: This list covers following specifications.			
		L.H. Door Sash Window			
		L.H. Door Sash Window, With Auto Air Conditioner			
		Both Sash Window			
		Both Sash Window, For EU Safety Regulation			
		Both Sash Window, With Auto Air Conditioner			
1		417-926-3141	Lock	1	91202-
2		01240-00616	Screw	3	91202-
3		417-926-3150	Rod	1	91202-
4		424-926-3531	Rod	1	91202-
5		425-925-3210	Rod	1	91202-
6		423-925-4230	Rod	1	91202-
7		01580-10403	Nut	2	91202-
8		01023-60430	Screw	1	91202-
9		417-926-3181	Cover	1	91202-
10		01010-80616	Bolt	4	91202-
11		01643-30623	Washer	4	91202-
12		423-925-4190	Cover	1	91202-
13		417-926-3411	Seal	2	91202-
14		417-926-3421	Seal	1	91202-
15		01010-80616	Bolt	2	91202-
16		01643-30623	Washer	2	91202-
17		417-926-3210	Link Assembly	2	91202-
18		01010-80616	Bolt	4	91202-
19		01643-30623	Washer	4	91202-
20		22B-54-16340	Snap, Rod	2	91202-
21		01643-30623	Washer	4	91202-
22		01640-20610	Washer	2	91202-
23		04052-20633	Pin, Snap	2	91202-
24		423-926-4640	Dam	1	91202-
25		423-925-4141	Seal, L.H.	1	91202-
26		417-926-3370	Knob	2	91202-
27		418-925-4260	Lock Assembly	1	91202-
28		423-925-4760	Clip	3	91202-
29		421-926-4670	Cover	1	91202-
30		09415-01008	• Cap	1	91202-
31		01224-40616	Screw	2	91202-
32		421-09-31310	Cap Assembly	2	91202-
33		01225-70616	Screw, Philips Head	3	91202-
34		418-926-3490	Washer	3	91202-

FIG. K0210-024003 ROPS Cab (Door Lock, L.H.)

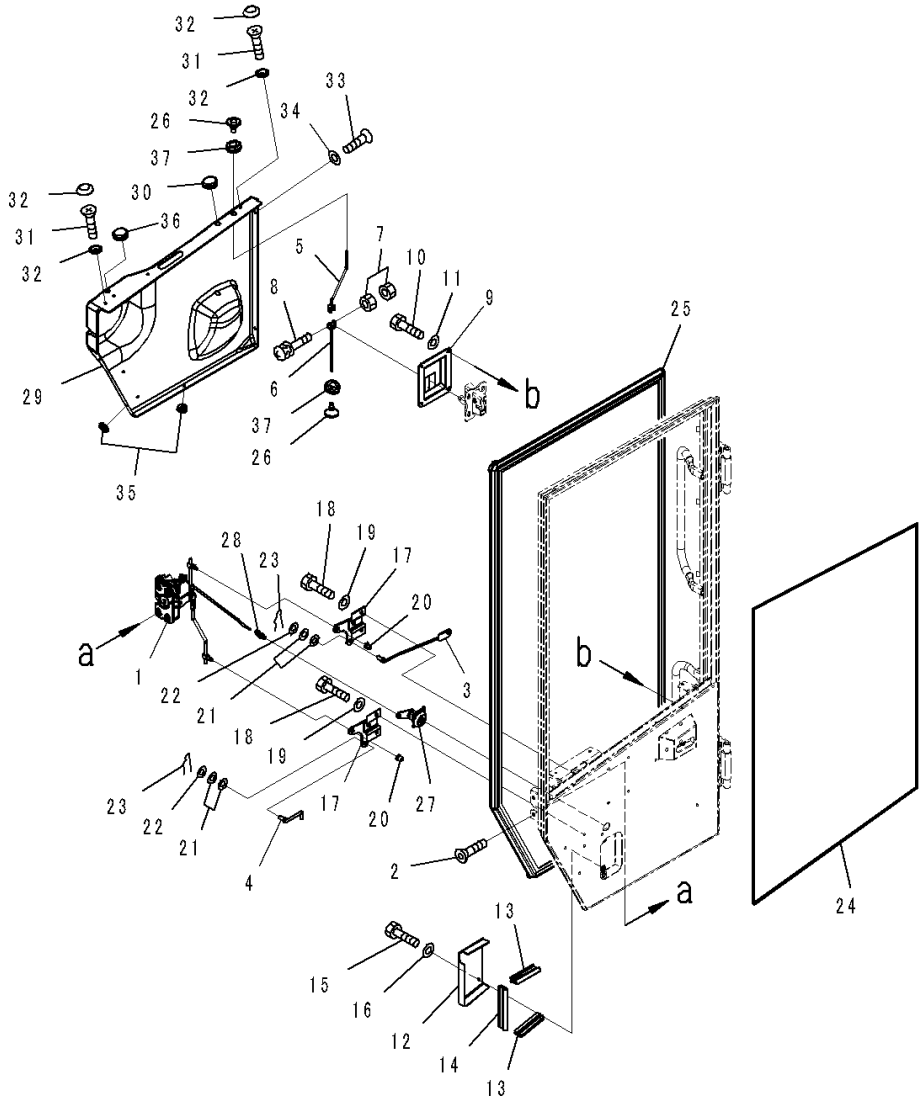

Index	Code	Part Number	Description	Qty	Serial Number
35		09415-00506	Cap	2	91202-
36		09415-01008	Cap	1	91202-
37		08037-01008	Grommet	2	91202-

FIG. K0210-024004 ROPS Cab (Door Knob, L.H.)

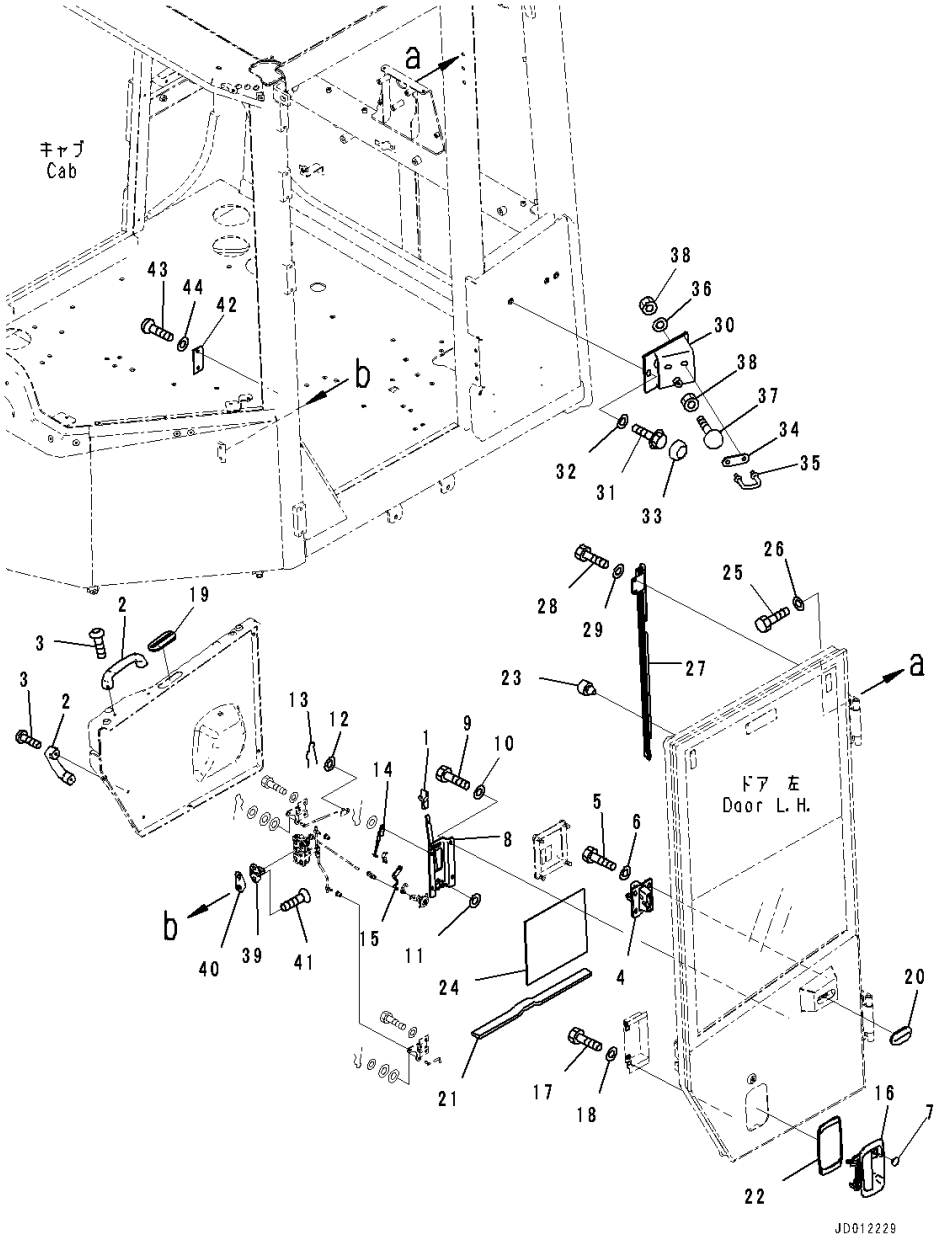

Index	Code	Part Number	Description	Qty	Serial Number
		Note: This list covers following specifications.			
		L.H. Door Sash Window			
		L.H. Door Sash Window, With Auto Air Conditioner			
		Both Sash Window			
		Both Sash Window, For EU Safety Regulation			
		Both Sash Window, With Auto Air Conditioner			
1		14X-911-1540	Knob	1	91202-
2		205-54-72220	Handle	2	91202-
3		417-926-3250	Screw	4	91202-
4		417-926-3380	Lock Assembly	1	91202-
5		01010-80820	Bolt	4	91202-
6		01643-30823	Washer	4	91202-
7		421-56-21720	Cap	1	91202-
8		418-925-4220	Handle	1	91202-
9		01010-80616	Bolt	4	91202-
10		01643-30623	Washer	4	91202-
11		01643-30623	Washer	1	91202-
12		01640-20610	Washer	1	91202-
13		04052-20633	Pin, Snap	1	91202-
14		418-925-4320	Rod	1	91202-
15		418-925-4310	Rod	1	91202-
16		424-926-3261	Handle	1	91202-
17		01010-80610	Bolt	2	91202-
18		01643-30623	Washer	2	91202-
19		424-926-3630	Grommet	1	91202-
20		423-926-3860	Grommet	1	91202-
21		417-926-3431	Sheet	1	91202-
22		426-925-3380	Seal	1	91202-
23		417-923-3950	Stopper	1	91202-
24		421-925-3160	Sheet	1	91202-
25		01010-81025	Bolt	6	91202-
26		01643-31032	Washer	6	91202-
27		425-925-3551	Assist	1	91202-
28		01010-D0612	Bolt	5	91202-
29		01643-70623	Washer	5	91202-
30		423-925-4630	Bracket	1	91202-
31		01435-01025	Bolt	2	91202-
32		01643-31032	Washer	2	91202-
33		363-54-31450	Cap	2	91202-
34		20Y-54-35710	Plate	1	91202-

FIG. K0210-024004 ROPS Cab (Door Knob, L.H.)

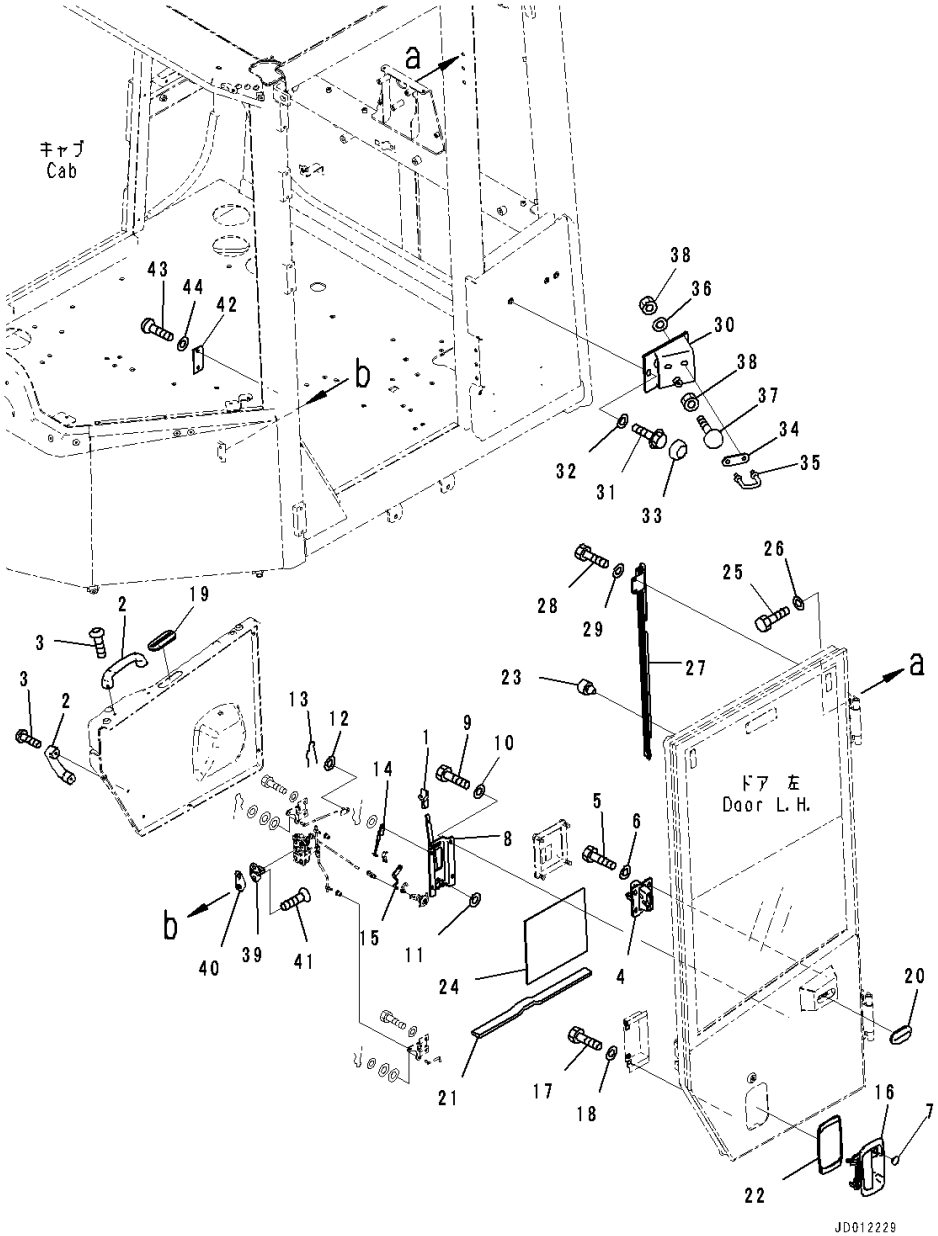

Index	Code	Part Number	Description	Qty	Serial Number
35		20Y-54-35961	Striker	1	91202-
36		01643-31032	Washer	2	91202-
37		20T-54-75290	Stopper	1	91202-
38		01580-11008	Nut	3	91202-
39		20Y-53-11810	Striker	1	91202-
40		20Y-54-35480	Shim, T=1.6mm	1	91202-
41		01240-01020	Screw, Hexagon Socket Head	2	91202-
42		421-926-4690	Plate	1	91202-
43		01225-70616	Screw, Philips Head	2	91202-
44		23S-55-51970	Washer	2	91202-

FIG. K0210-024005 ROPS Cab (Door, R.H.)

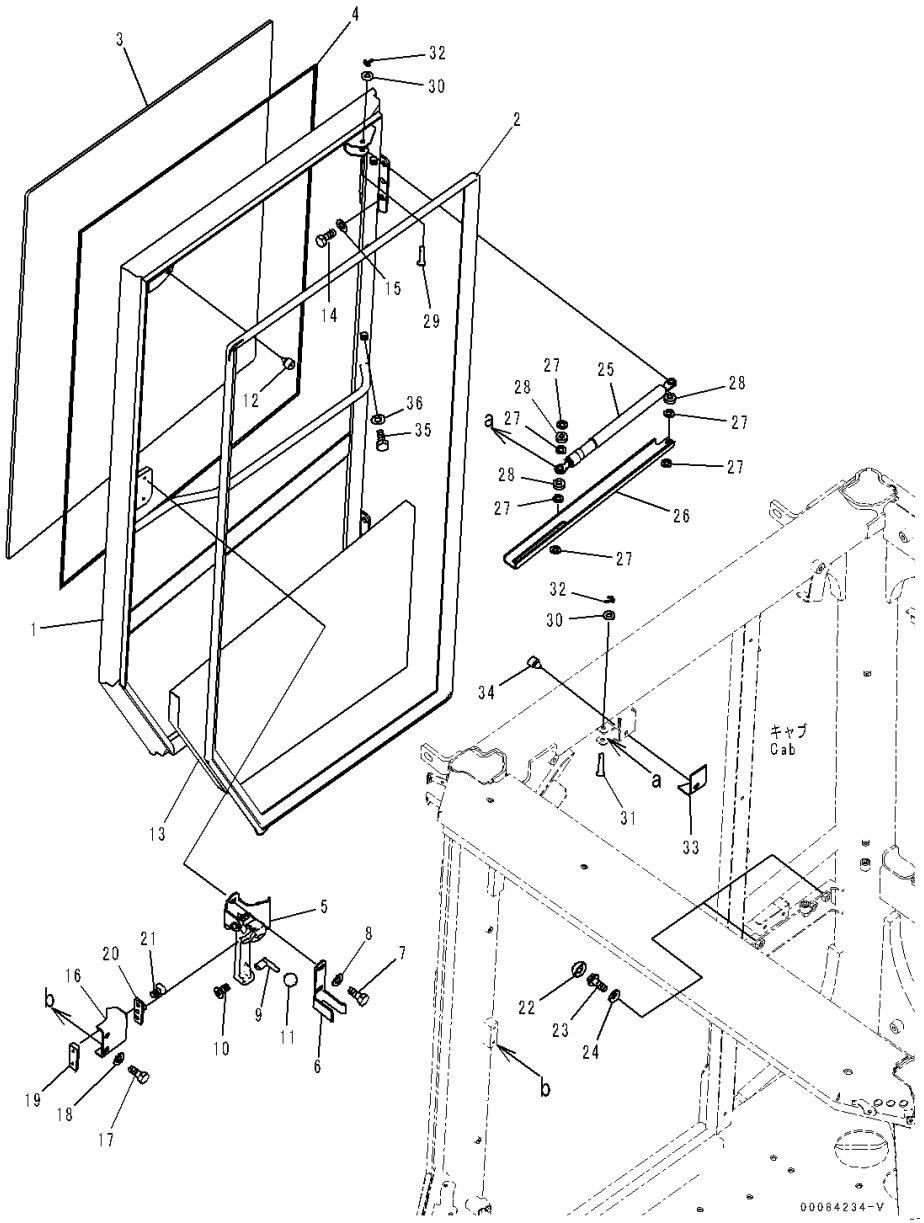

Index	Code	Part Number	Description	Qty	Serial Number
		Note: This list covers following specifications.			
		L.H. Door Sash Window			
		L.H. Door Sash Window, With Auto Air Conditioner			
1		423-925-4214	Door Assembly, R.H.	1	91202-
2		423-925-4341	Seal, R.H.	1	91202-
3		423-925-4163	Glass	1	91202-
4		423-926-4640	Dam	1	91202-
5		423-925-4271	Lock Assembly	1	91202-
6		426-56-31650	Plate	1	91202-
7		01010-D0620	Bolt	2	91202-
8		01643-70623	Washer	2	91202-
9		423-925-4391	Bracket	1	91202-
10		01224-70412	Screw, Philips Head	1	91202-
11		22T-55-15290	Knob	1	91202-
12		417-923-3950	Stopper	1	91202-
13		423-925-4360	Sheet	1	91202-
14		01010-81025	Bolt	6	91202-
15		01643-31032	Washer	6	91202-
16		423-925-4334	Bracket	1	91202-
17		01010-D1020	Bolt	2	91202-
18		01643-71032	Washer	2	91202-
19		423-925-4241	Plate	1	91202-
20		423-925-4253	Striker	1	91202-
21		01240-00616	Screw	2	91202-
22		363-54-31450	Cap	2	91202-
23		01435-01025	Bolt	2	91202-
24		01643-31032	Washer	2	91202-
25		426-56-32180	Spring, Gas	1	91202-
26		425-926-3911	Plate	1	91202-
27		426-925-3981	Washer	6	91202-
28		426-925-3990	Spacer	3	91202-
29		04205-30835	Pin	1	91202-
30		01640-20816	Washer	2	91202-
31		154-61-16930	Pin	1	91202-
32		04050-12015	Pin, Cotter	2	91202-
33		425-926-3941	Sheet	1	91202-
34		56B-54-13340	Stopper	1	91202-
35		01010-D0610	Bolt	3	91202-
36		01643-70623	Washer	3	91202-

FIG. K0210-024006 ROPS Cab (Glass Window)

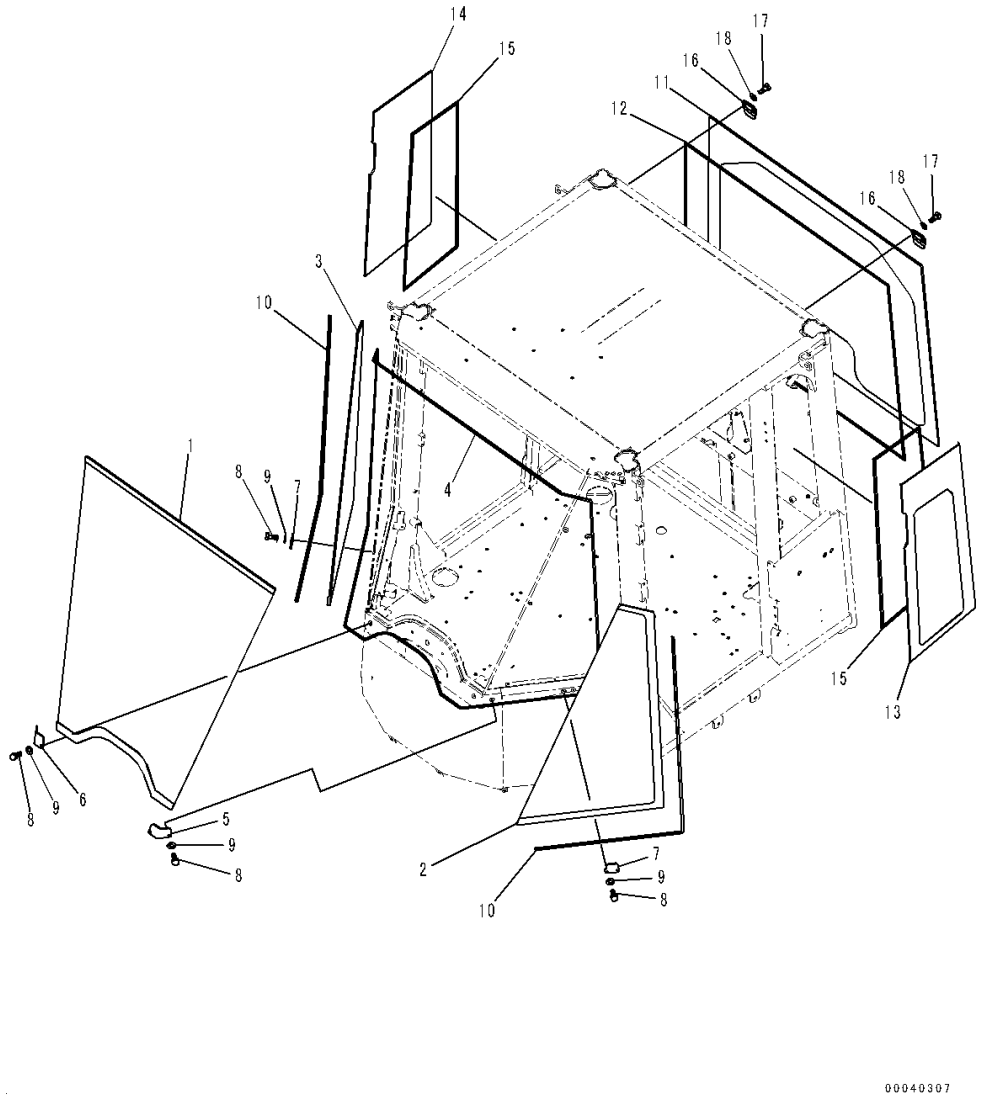

Index	Code	Part Number	Description	Qty	Serial Number
		Note: This list covers following specifications.			
		L.H. Door Sash Window			
		L.H. Door Sash Window, With Auto Air Conditioner			
		Both Sash Window			
		Both Sash Window, For EU Safety Regulation			
		Both Sash Window, With Auto Air Conditioner			
1		423-926-4711	Glass, Center, Front	1	91202-
2		423-926-4721	Glass, L.H., Side, Front	1	91202-
3		423-926-4731	Glass, R.H., Side, Front	1	91202-
4		423-926-4610	Dam	1	91202-
5		421-926-4631	Plate, L.H.	1	91202-
6		421-926-4641	Plate, R.H.	1	91202-
7		421-926-4650	Plate	2	91202-
8		01010-D0620	Bolt	8	91202-
9		01643-70623	Washer	8	91202-
10		425-925-3440	Weather Strip	2	91202-
11		423-926-4742	Glass, Center, Rear	1	91202-
12		423-926-4620	Dam	1	91202-
13		423-926-4751	Glass, L.H., Side, Rear	1	91202-
14		423-925-4581	Glass, R.H., Side, Rear	1	91202-
15		423-926-4630	Dam	2	91202-
16		421-926-4661	Plate	2	91202-
17		01010-81020	Bolt	4	91202-
18		01643-31032	Washer	4	91202-

FIG. K0210-024007 ROPS Cab (Wiper)

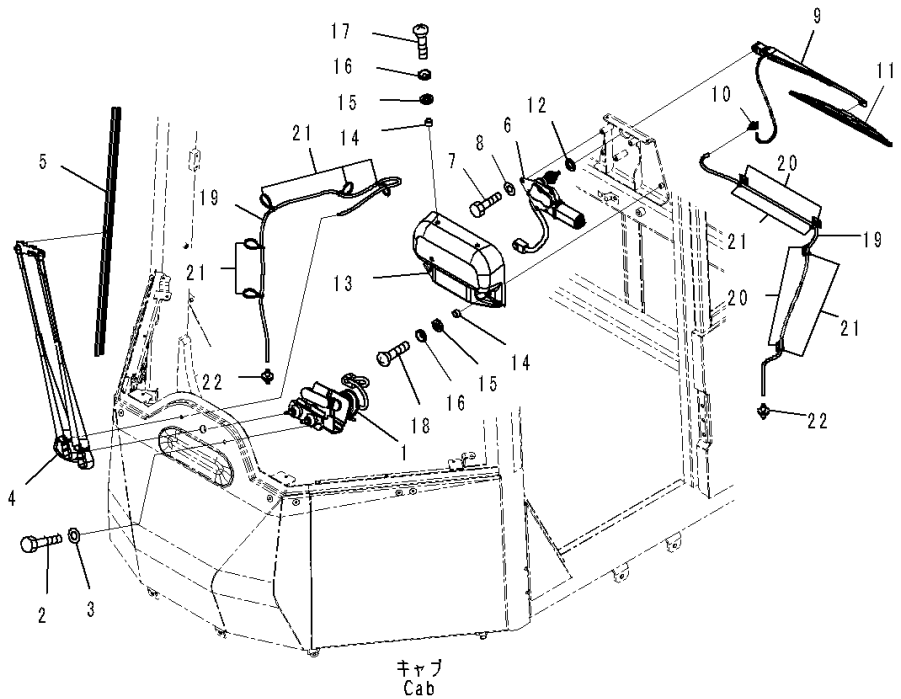

Index	Code	Part Number	Description	Qty	Serial Number
		Note: This list covers following specifications.			
		L.H. Door Sash Window			
		L.H. Door Sash Window, With Auto Air Conditioner			
		Both Sash Window			
		Both Sash Window, For EU Safety Regulation			
		Both Sash Window, With Auto Air Conditioner			
1		418-923-3932	Motor, Wiper, Front	1	91202-
2		02030-70444	Bolt, Unified	1	91202-
3		419-926-4260	Washer	1	91202-
4		423-926-4781	Arm Assembly, Wiper	1	91202-
		ND857199-0320	• Accessory Assembly	1	91202-
		ND857056-1540	• • Nut	1	91202-
		ND857059-0020	• • Screw	1	91202-
5		425-54-15250	Wiper Blade	1	91202-
		425-56-21220	• Rubber	1	91202-
6		421-926-3612	Motor, Wiper, Rear	1	91202-
7		01010-80820	Bolt	3	91202-
8		01643-30823	Washer	3	91202-
9		425-925-3360	Arm Assembly, Wiper	1	91202-
10		426-925-3930	• Connector	1	91202-
11		20U-54-24850	Wiper Blade	1	91202-
12		424-926-3890	Spacer	1	91202-
13		421-926-4311	Cover	1	91202-
14		426-56-31890	Collar	4	91202-
15		426-56-31870	Washer	4	91202-
16		23S-55-51970	Washer	4	91202-
17		01225-70620	Screw, Philips Head	2	91202-
18		01225-70616	Screw, Philips Head	2	91202-
19		423-925-4890	Hose	2	91202-
20		20U-54-46520	Hook, Sticker Type	4	91202-
21		08034-40521	Band	9	91202-
22		421-07-15110	Joint	2	91202-

FIG. K0210-024008 ROPS Cab (Interior)

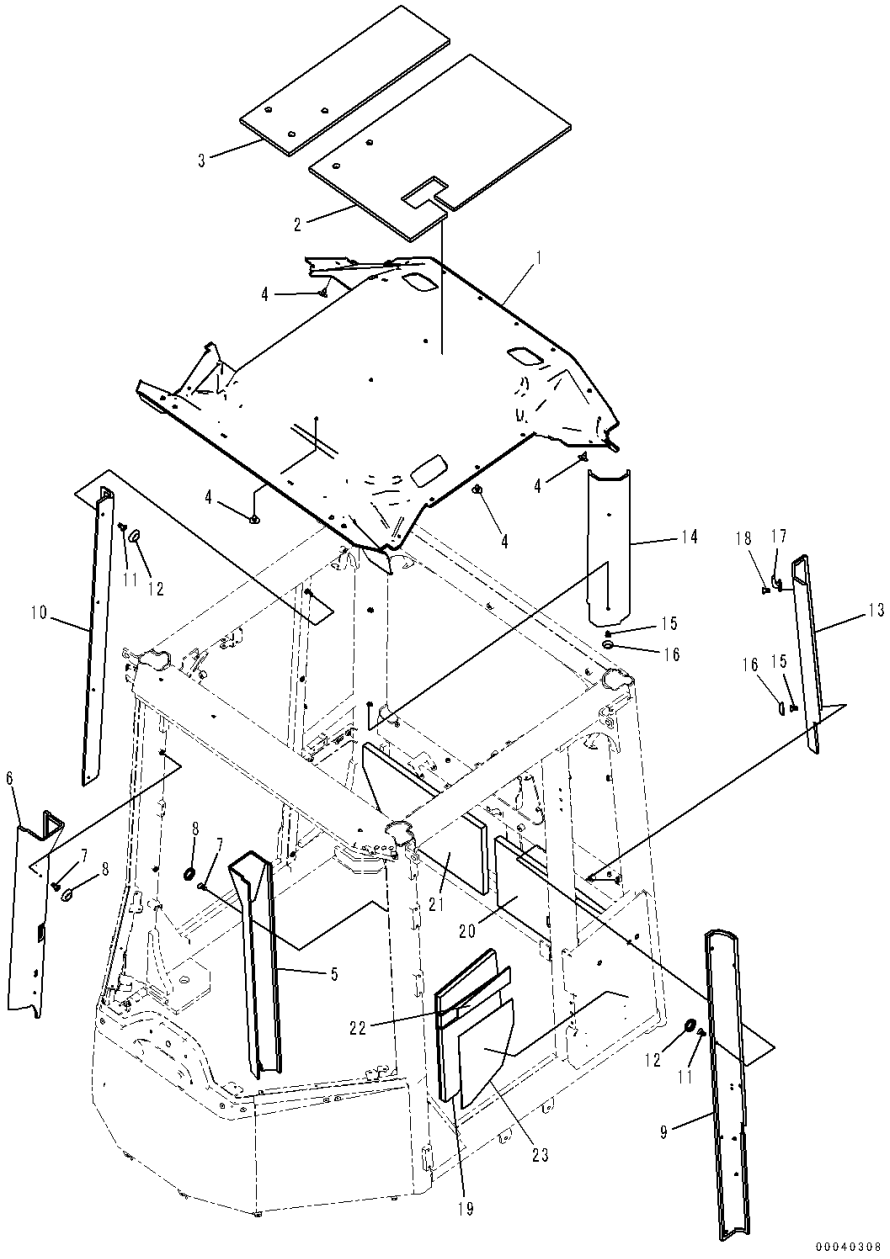

Index	Code	Part Number	Description	Qty	Serial Number
		Note: This list covers following specifications.			
		L.H. Door Sash Window			
		L.H. Door Sash Window, With Auto Air Conditioner			
		Both Sash Window			
		Both Sash Window, For EU Safety Regulation			
		Both Sash Window, With Auto Air Conditioner			
1		423-926-4483	Pad	1	91202-
2		423-926-4661	Sheet	1	91202-
3		423-926-4832	Sheet	1	91202-
4		423-56-21910	Button	16	91202-
5		423-925-4811	Cover	1	91202-
6		423-925-4821	Cover	1	91202-
7		01224-40612	Screw, Philips Head	4	91202-
8		421-09-31310	Cap Assembly	4	91202-
9		423-925-4851	Cover	1	91202-
10		423-925-4861	Cover	1	91202-
11		01224-40616	Screw	12	91202-
12		421-09-31310	Cap Assembly	12	91202-
13		423-925-4832	Cover	1	91202-
14		423-925-4841	Cover	1	91202-
15		01224-40612	Screw, Philips Head	4	91202-
16		421-09-31310	Cap Assembly	4	91202-
17		205-54-51250	Hanger	1	91202-
18		01224-70412	Screw, Philips Head	2	91202-
19		423-926-4883	Sheet	1	91202-
20		423-926-4682	Sheet, L.H.	1	91202-
21		423-926-4692	Sheet, R.H.	1	91202-
22		423-925-4510	Sheet	1	91202-
23		423-925-4520	Sheet	1	91202-

FIG. K0210-024009 ROPS Cab (Sunvisor)

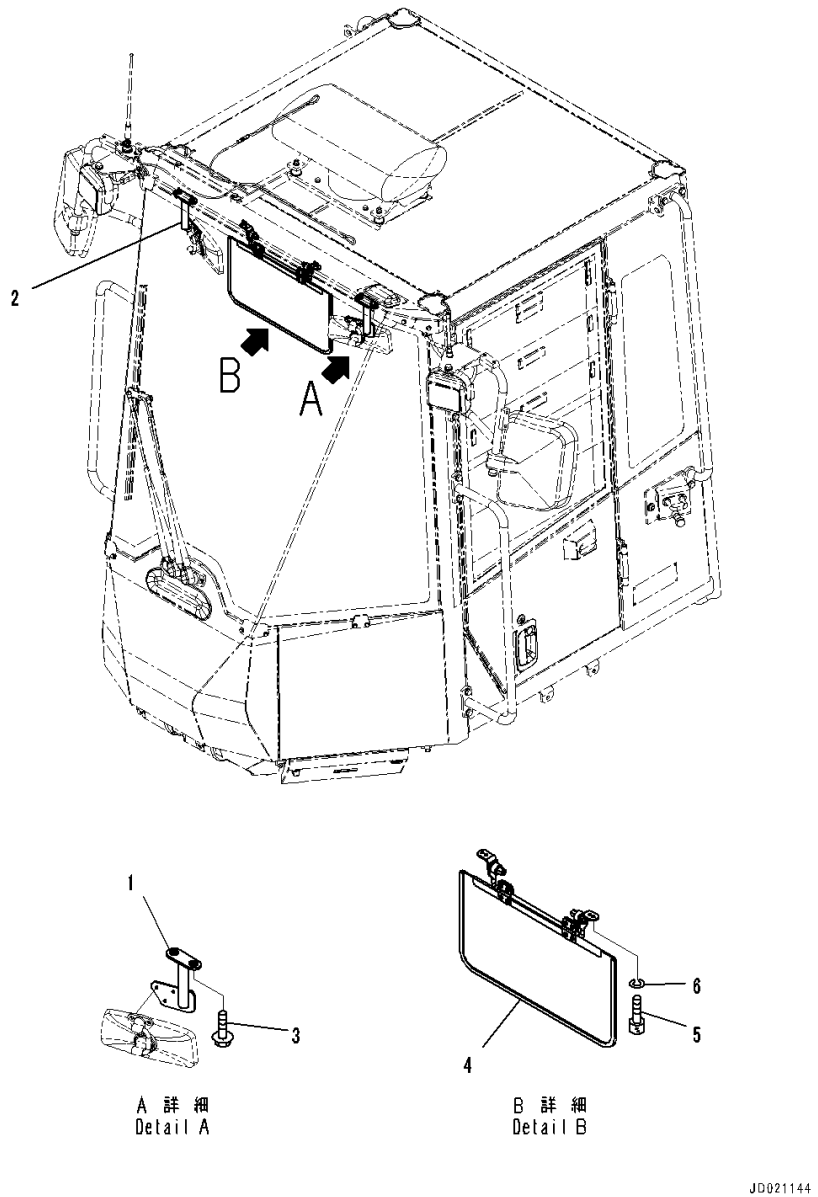

Index	Code	Part Number	Description	Qty	Serial Number
		Note: This list covers following specifications.			
		L.H. Door Sash Window			
		L.H. Door Sash Window, With Auto Air Conditioner			
		Both Sash Window			
		Both Sash Window, For EU Safety Regulation			
		Both Sash Window, With Auto Air Conditioner			
1		423-925-4641	Stay	1	91202-
2		423-925-4651	Stay	1	91202-
3		01435-40620	Bolt	4	91202-
4		425-925-3281	Sunvisor	1	91202-
5		01252-80520	Bolt, Hexagon Socket Head	4	91202-
6		01601-50513	Washer, Spring	4	91202-

FIG. K0210-024010 ROPS Cab (Antenna)

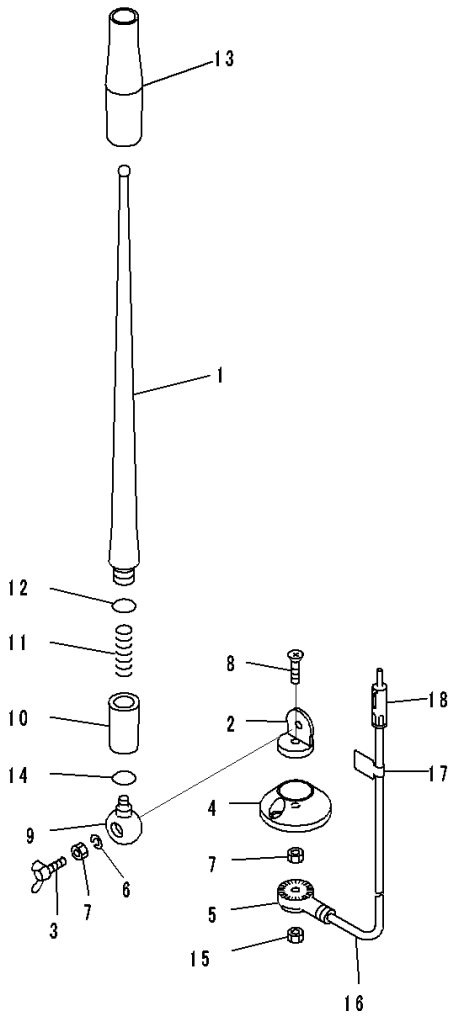

00084650

Index	Code	Part Number	Description	Qty	Serial Number
		Note: This list covers following specifications.			
		L.H. Door Sash Window			
		L.H. Door Sash Window, With Auto Air Conditioner			
		Both Sash Window			
		Both Sash Window, For EU Safety Regulation			
		Both Sash Window, With Auto Air Conditioner			
		20Y-06-41990	Antenna	1	91202-
1		RFU419B-418-A	• Rod	1	91202-
2	C1		• Holder	1	91202-
3		RFU419B-418-D	• Bolt, Wing	1	91202-
4		RFU419B-418-E	• Base	1	91202-
5	C1		• Holder	1	91202-
6		RFU419B-418-B	• Washer, Spring	1	91202-
7		RFU419B-418-C	• Nut	2	91202-
8	C1		• Screw	1	91202-
9	C1		• Holder	1	91202-
10	C1		• Holder Assembly	1	91202-
11	C1		• Spring	1	91202-
12	C1		• O-ring	1	91202-
13	C1		• Tube	1	91202-
14	C1		• O-ring	1	91202-
15		REU419B-418-C	• Nut	1	91202-
16		RFU419B-418-F	• Cable	1	91202-
17	C1		• Plate	1	91202-
18	C1		• Plug	1	91202-

FIG. K0210-024011 ROPS Cab (Rubber Antenna Mounting and Speaker)

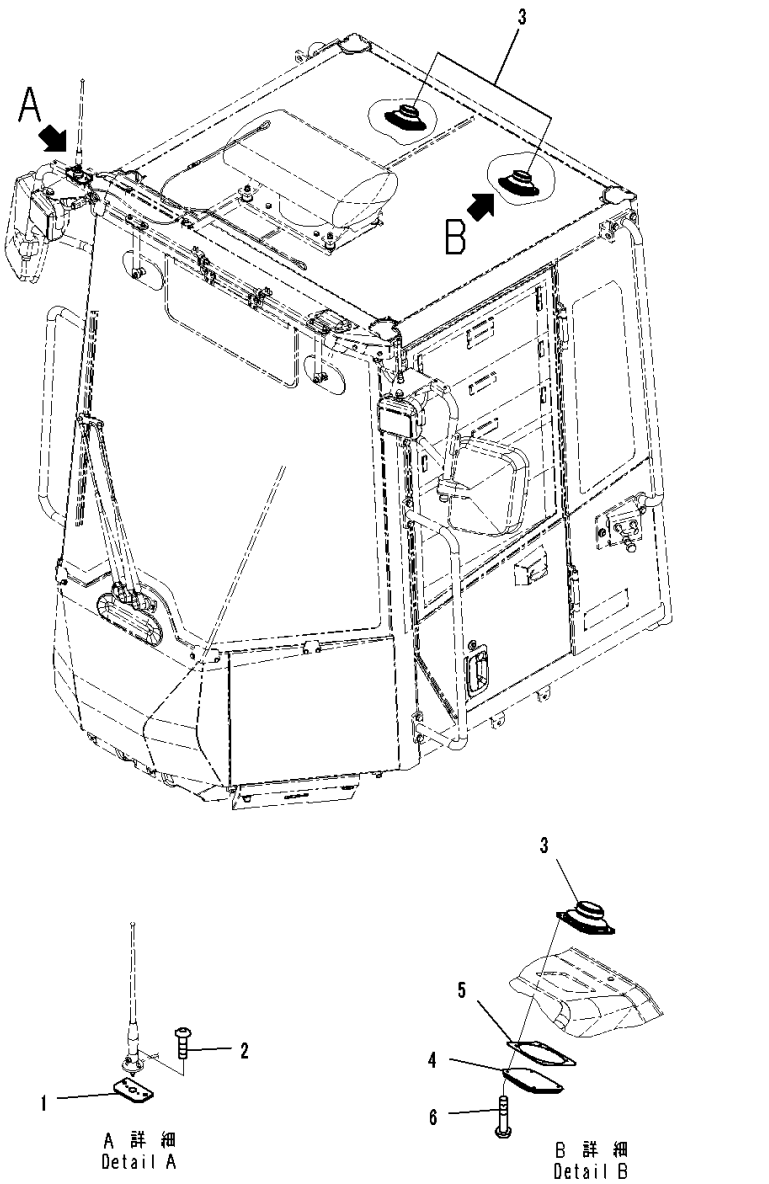

Index	Code	Part Number	Description	Qty	Serial Number
		Note: This list covers following specifications.			
		L.H. Door Sash Window			
		L.H. Door Sash Window, With Auto Air Conditioner			
		Both Sash Window			
		Both Sash Window, For EU Safety Regulation			
		Both Sash Window, With Auto Air Conditioner			
1		416-926-3494	Bracket	1	91202-
2		01023-20416	Screw	2	91202-
3		20Y-06-42180	Speaker	2	91202-
4		418-967-2150	Cover	2	91202-
5		418-967-2230	Plate	2	91202-
6		01220-40420	Screw, Philips Head	8	91202-

FIG. K0210-024012 ROPS Cab (Mark and Plate)

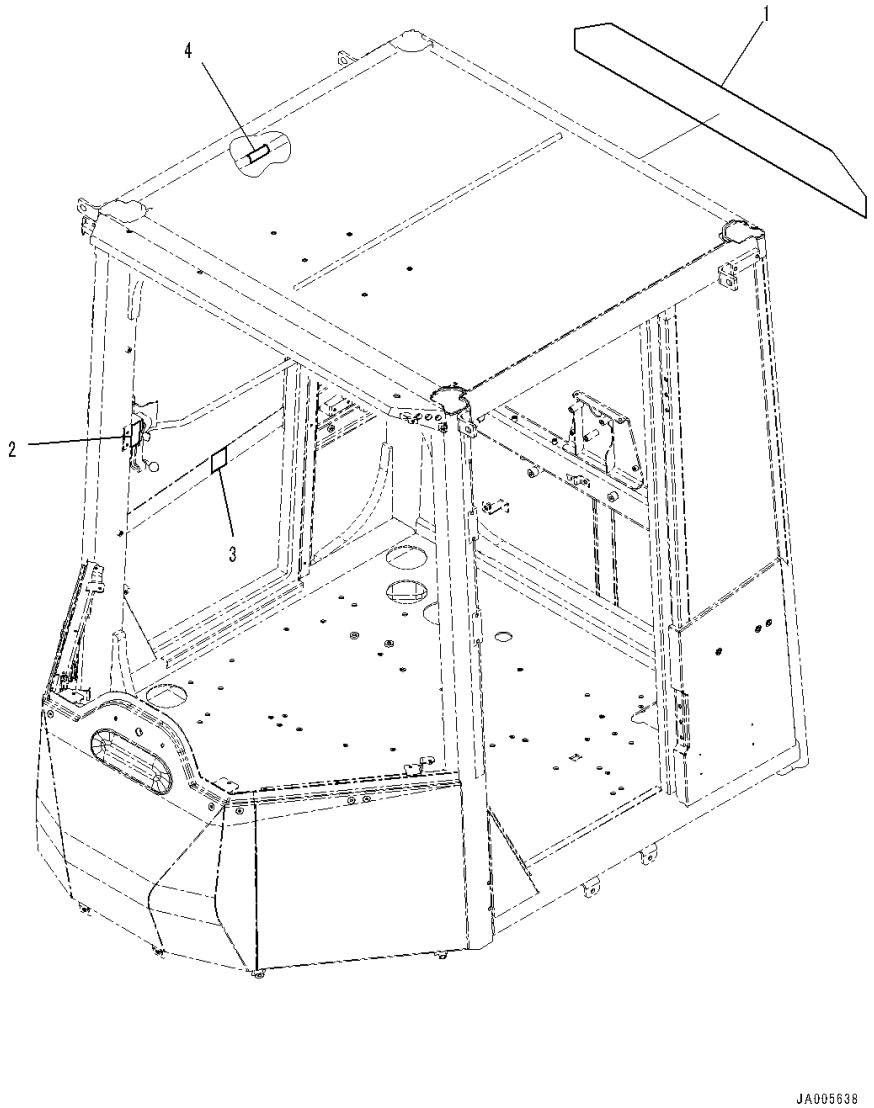

Index	Code	Part Number	Description	Qty	Serial Number
		Note: This list covers following specifications.			
		L.H. Door Sash Window			
		L.H. Door Sash Window, With Auto Air Conditioner			
		Both Sash Window, For EU Safety Regulation			
1		417-926-3711	Plate, Komatsu Logo	1	91202-
2		425-93-51110	Decal, Emergency Exit	1	91202-
3		421-926-4990	Plate, Emergency Escape Door	1	91202-
4		09659-A0641	Plate, Warning, Explosion Hazard	1	91202-

FIG. K0210-024013 ROPS Cab (Front Cover, Switch and Monitor)

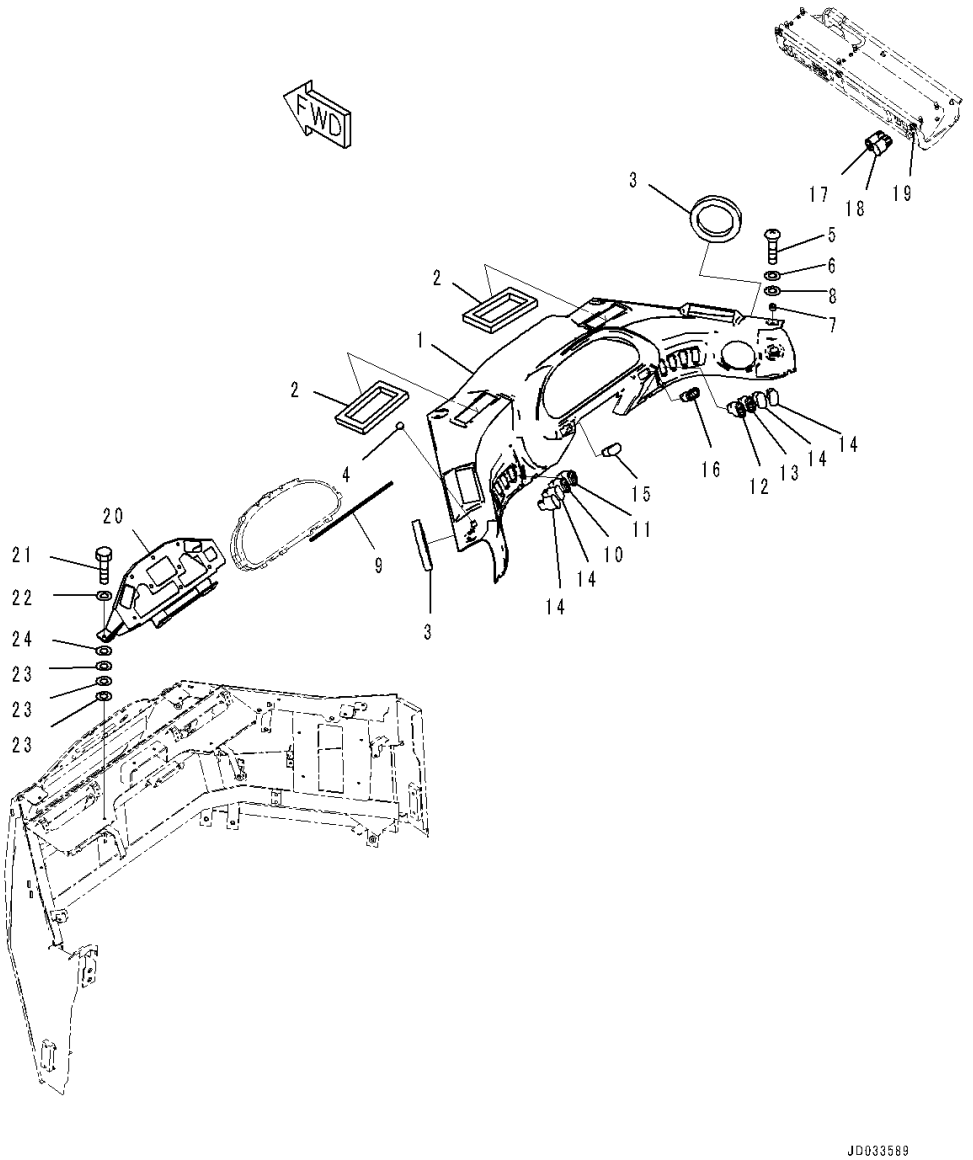

Index	Code	Part Number	Description	Qty	Serial Number
		Note: This list covers following specifications.			
		L.H. Door Sash Window			
		L.H. Door Sash Window, With Auto Air Conditioner			
		Both Sash Window			
		Both Sash Window, For EU Safety Regulation			
		Both Sash Window, With Auto Air Conditioner			
		423-926-4500	Cover Assembly	1	91202-
1	C1		• Cover, Front	1	91202-
2		423-07-31641	• Sheet	2	91202-
3		423-07-31661	• Sheet	2	91202-
4		09415-01008	Cap	1	91202-
5		01225-70620	Screw, Philips Head	10	91202-
6		23S-55-51970	Washer	10	91202-
7		426-56-31890	Collar	10	91202-
8		426-56-31870	Washer	10	91202-
9		421-925-3170	Cushion	1	91202-
10		423-06-45410	Switch, Monitor Panel Mode (1)	1	91202-
11		423-06-45390	Switch, Monitor Panel Mode (2)	1	91202-
12		423-06-45360	Switch, Work Lamp, Front	1	91202-
13		423-06-45350	Switch, Work Lamp, Rear	1	91202-
14		20Y-06-42190	Cover	4	91202-
15		20Y-06-42190	Cover	1	91202-
16		423-06-45370	Switch, Parking Brake	1	91202-
17		423-06-45440	Switch, Heat Glass, Rear	1	91202-
18		20Y-06-42190	Cover	1	91202-
19		09415-00506	Cap	1	91202-
20		423-926-4562	Support	1	91202-
21		01010-80625	Bolt	3	91202-
22		01643-30623	Washer	3	91202-
23		01643-30623	Washer	9	91202-
24		01640-20610	Washer	3	91202-

FIG. K0210-024014 ROPS Cab (Cup Holder, Cigarette Lighter and Ashtray)

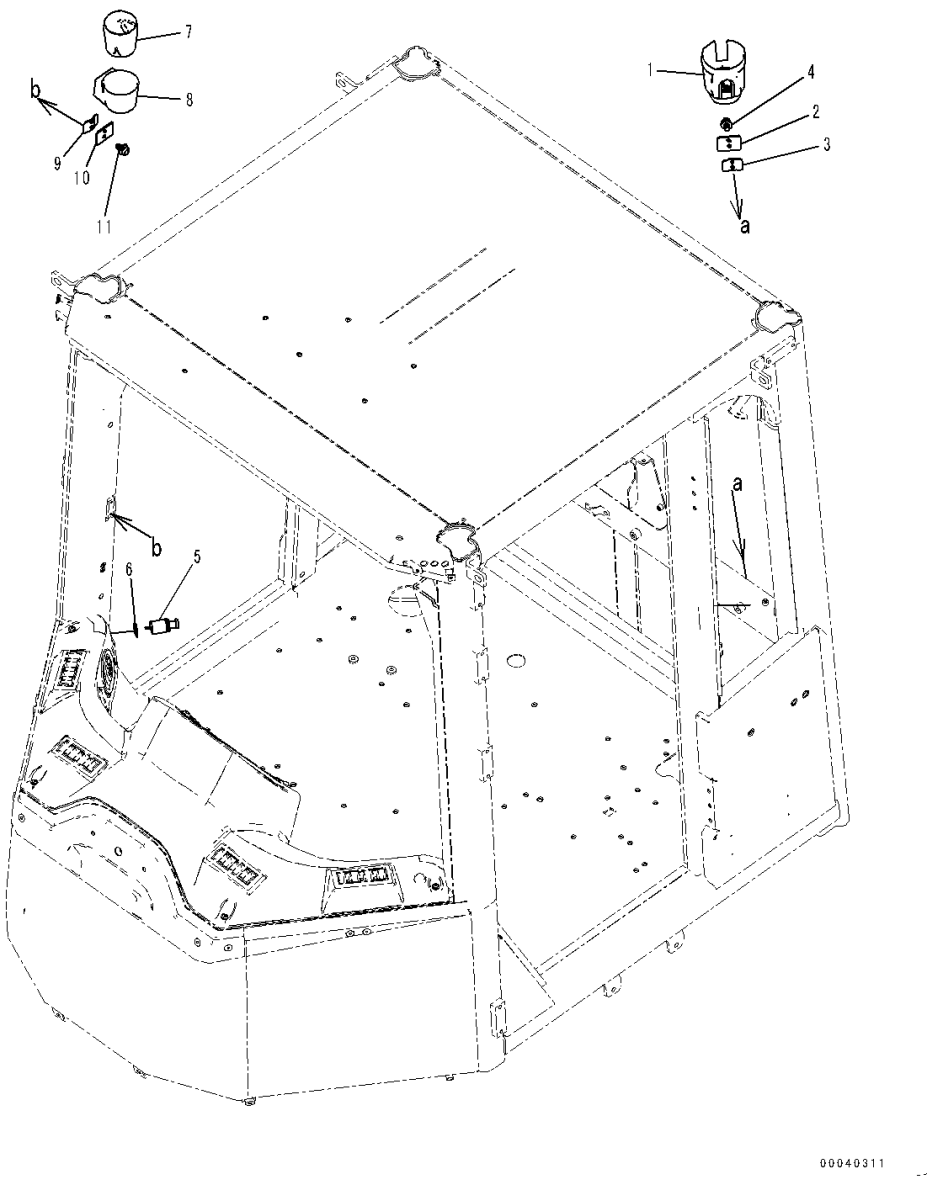

Index	Code	Part Number	Description	Qty	Serial Number
		Note: This list covers following specifications.			
		L.H. Door Sash Window			
		L.H. Door Sash Window, With Auto Air Conditioner			
		Both Sash Window			
		Both Sash Window, For EU Safety Regulation			
		Both Sash Window, With Auto Air Conditioner			
1		208-53-12991	Holder	1	91202-
2		421-926-4780	Plate	1	91202-
3		426-925-3890	Plate	1	91202-
4		01023-10616	Screw	2	91202-
5		20Y-06-23472	Cigarette Lighter	1	91202-
6		421-926-4710	Plate	1	91202-
7		20Y-43-41491	Ashtray	1	91202-
8		425-926-3751	Holder	1	91202-
9		426-925-3890	Plate	1	91202-
10		421-926-4780	Plate	1	91202-
11		01023-10614	Screw	2	91202-

FIG. K0210-024015 ROPS Cab (Wiring Harness)

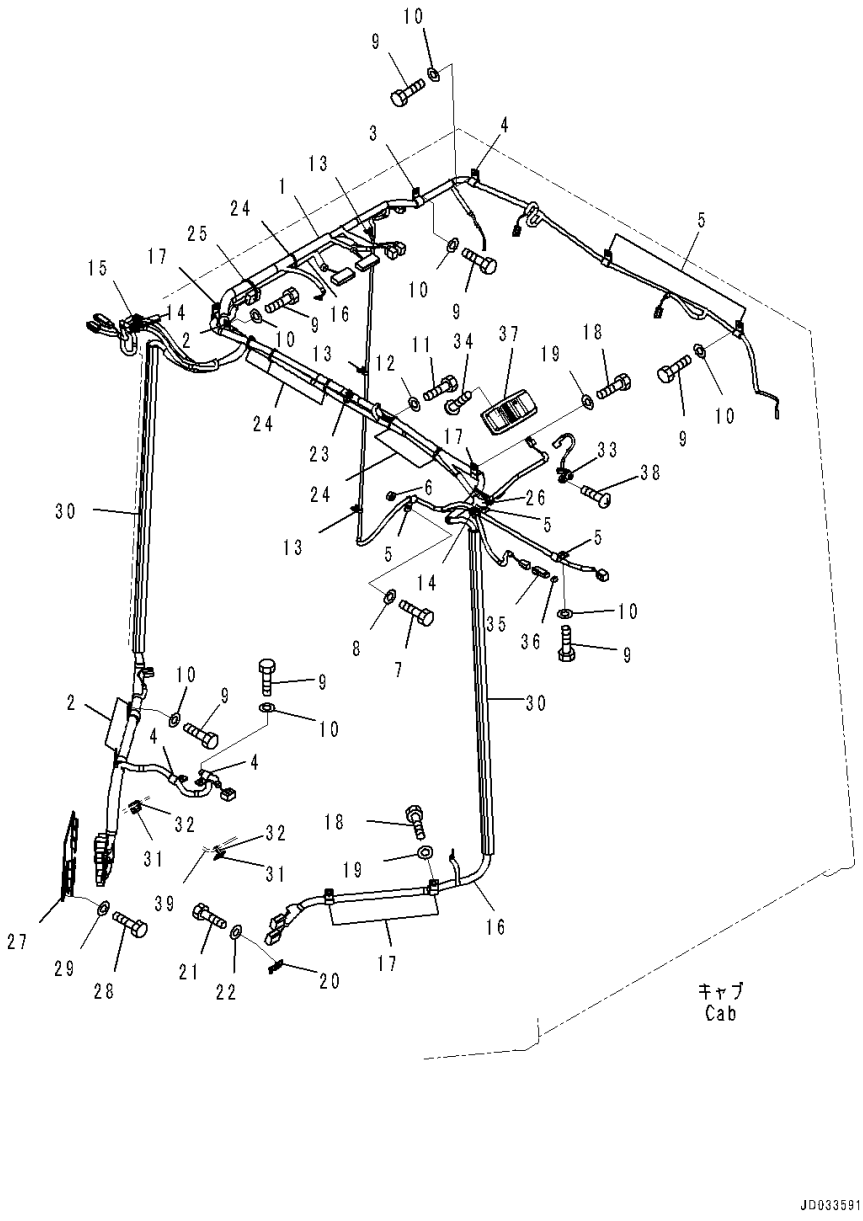

Index	Code	Part Number	Description	Qty	Serial Number
		Note: This list covers following specifications.			
		L.H. Door Sash Window			
		L.H. Door Sash Window, With Auto Air Conditioner			
		Both Sash Window			
		Both Sash Window, For EU Safety Regulation			
		Both Sash Window, With Auto Air Conditioner			
1		423-926-4852	Wiring Harness	1	91202-
2		04434-52310	Clip	3	91202-
3		04434-51710	Clip	1	91202-
4		04434-51410	Clip	3	91202-
5		04434-51010	Clip	5	91202-
6		20Y-54-65860	Spacer	1	91202-
7		01010-81030	Bolt	1	91202-
8		01643-31032	Washer	1	91202-
9		01010-81020	Bolt	11	91202-
10		01643-31032	Washer	11	91202-
11		01010-80610	Bolt	1	91202-
12		01643-30623	Washer	1	91202-
13		08059-00310	Clip	3	91202-
14		175-06-81610	Grommet	4	91202-
15		08037-01008	Grommet	1	91202-
16		423-07-31782	Wiring Harness	1	91202-
17		04434-51710	Clip	4	91202-
18		01010-81020	Bolt	4	91202-
19		01643-31032	Washer	4	91202-
20		08053-00910	Clip	1	91202-
21		01010-81020	Bolt	1	91202-
22		01643-31032	Washer	1	91202-
23		08059-00310	Clip	1	91202-
24		08034-20519	Band	6	91202-
25		08034-20823	Band	1	91202-
26		08034-40521	Band	1	91202-
27		423-925-4612	Bracket	1	91202-
28		01010-81020	Bolt	2	91202-
29		01643-31032	Washer	2	91202-
30		417-926-3450	Duct	2	91202-
31		20U-54-46520	Hook, Sticker Type	2	91202-
32		08034-40521	Band	2	91202-
33		424-926-3490	Switch, Door	1	91202-
34		419-923-2130	Screw	1	91202-

FIG. K0210-024015 ROPS Cab (Wiring Harness)

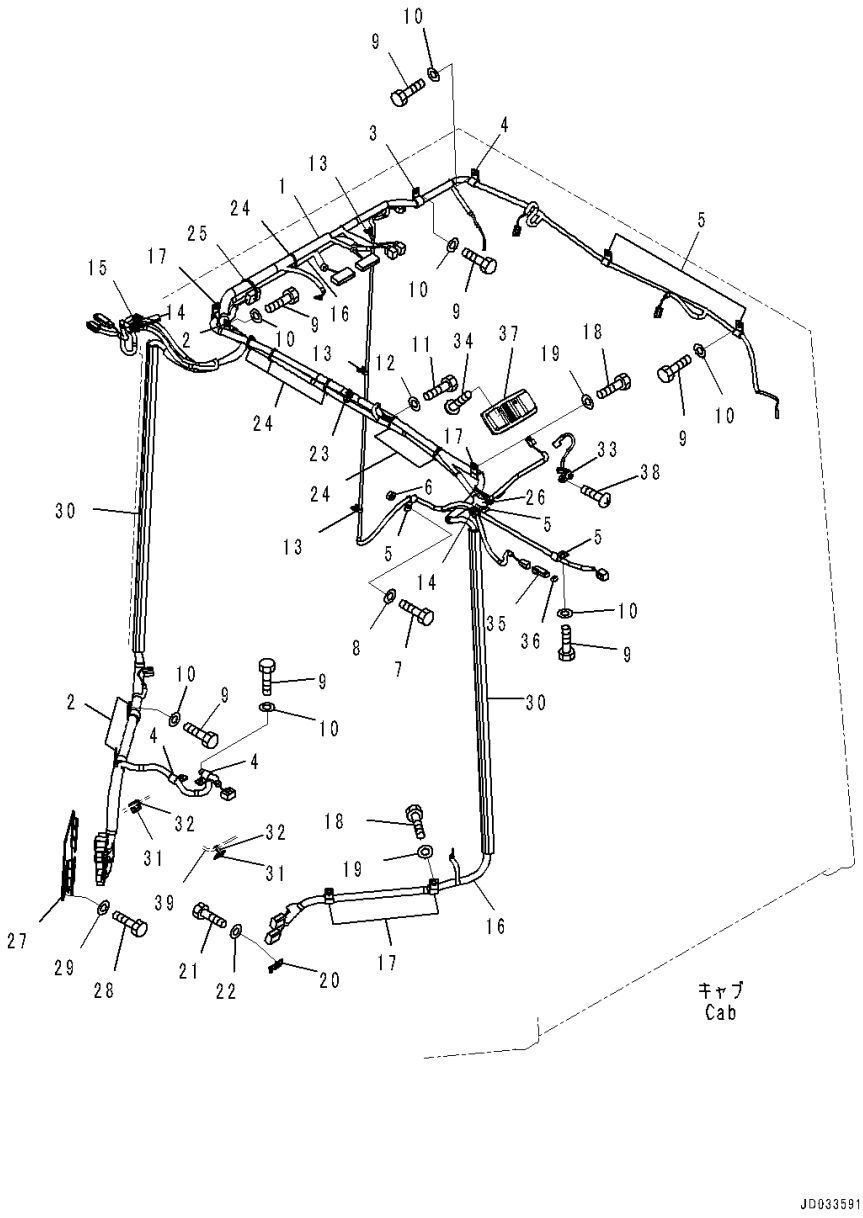

Index	Code	Part Number	Description	Qty	Serial Number
35		08056-00111	Connector Body, Male	1	91202-
36		08056-00130	Holder, Male	1	91202-
37		421-06-26210	Room Lamp	1	91202-
		421-06-26250	• Lens	2	91202-
		421-06-26260	• Bulb, 10watt	2	91202-
38		419-923-2130	Screw	2	91202-
39		(421-06-45111)	Wiring Harness(Refer to Page 578)		-

FIG. K0210-024016 ROPS Cab (L.H. Door Sash Window) (Cap)

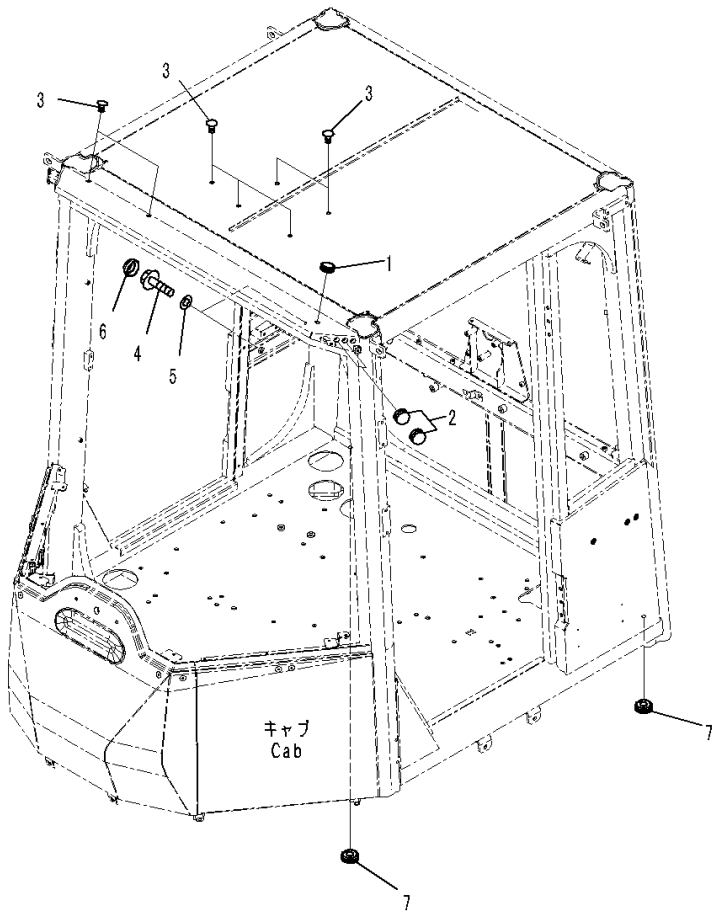

Index	Code	Part Number	Description	Qty	Serial Number
1		09415-01008	Cap	1	91202-
2		09415-01008	Cap	4	91202-
3		421-09-21210	Button	7	91202-
4		01435-01025	Bolt	2	91202-
5		01643-51032	Washer	2	91202-
6		363-54-31450	Cap	2	91202-
7		09415-00706	Cap	2	91202-

FIG. K0210-024017 ROPS Cab (Air Conditioner Duct)

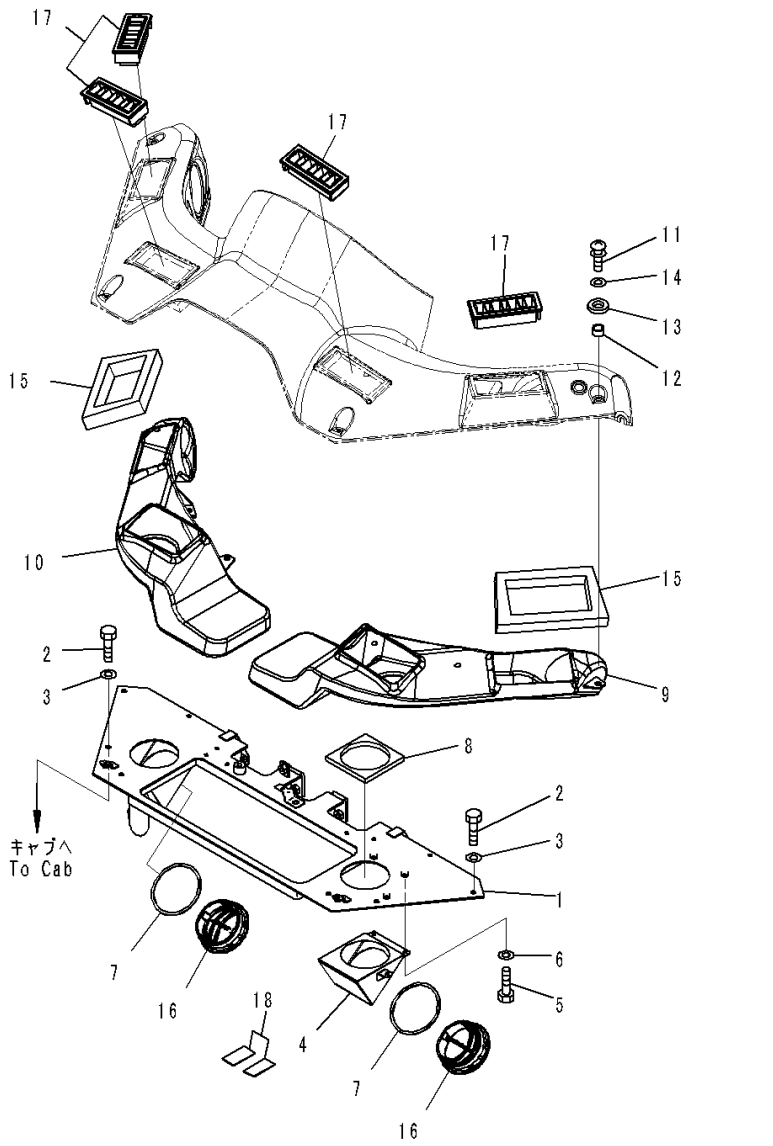

Index	Code	Part Number	Description	Qty	Serial Number
		Note: This list covers following specifications.			
		L.H. Door Sash Window			
		Both Sash Window			
		Both Sash Window, For EU Safety Regulation			
1		423-926-4577	Bracket	1	91202-
2		01010-80616	Bolt	6	91202-
3		01643-30623	Washer	6	91202-
4		423-925-4412	Cover	1	91202-
5		01010-80612	Bolt	3	91202-
6		01643-30623	Washer	3	91202-
7		423-925-4482	Sheet	2	91202-
8		423-925-4420	Sheet	1	91202-
9		423-07-31683	Duct, L.H.	1	91202-
10		423-07-31693	Duct, R.H.	1	91202-
11		01023-10620	Screw	6	91202-
12		426-56-31890	Collar	6	91202-
13		426-56-31870	Washer	6	91202-
14		01643-30623	Washer	6	91202-
15		423-07-31250	Sheet	2	91202-
16		20Y-53-12172	Grille	4	91202-
17		421-07-12512	Grille	4	91202-
18		423-07-31280	Plate	2	91202-

FIG. K0210-024018 ROPS Cab (Air Conditioner Unit)

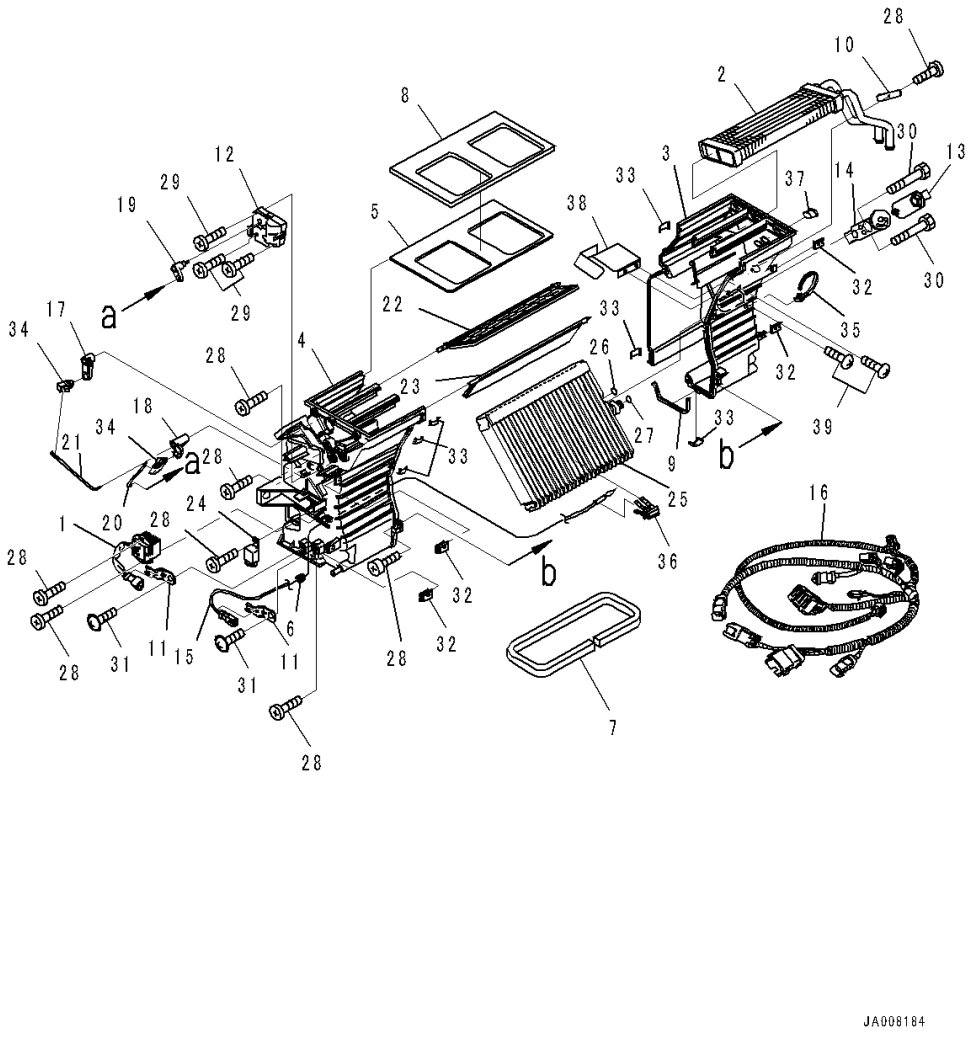

Index	Code	Part Number	Description	Qty	Serial Number
		Note: This list covers following specifications.			
		L.H. Door Sash Window			
		Both Sash Window			
		Both Sash Window, For EU Safety Regulation			
		423-07-31533	Unit Assembly	1	91202-
1		ANTKS-B210A0	• Controller	1	91202-
2		AN51141-10431	• Heater Core Assembly	1	91202-
3		AN51150-12720	• Case Assembly	1	91202-
4		AN51150-12602	• Case Assembly	1	91202-
5		AN51159-41840	• Outlet Section	1	91202-
6		AN51184-40820	• Grommet	1	91202-
7		AN51191-58720	• Packing	1	91202-
8		AN51191-58830	• Packing	1	91202-
9		AN51191-59410	• Packing	1	91202-
10		AN51243-41500	• Pipe	1	91202-
11		AN51259-41750	• Bracket	2	91202-
12		AN51502-15130	• Actuator	1	91202-
13		AN51436-D0580	• Valve, Expansion	1	91202-
14		AN51515-A0490	• Valve, Expansion	1	91202-
15		AN51532-41240	• Thermistor	1	91202-
16		AN51550-18780	• Wiring Harness	1	91202-
17		AN51571-43580	• Lever	1	91202-
18		AN51571-43590	• Lever	1	91202-
19		AN51571-44120	• Lever	1	91202-
20		AN51571-44320	• Rod	1	91202-
21		AN51571-44330	• Rod	1	91202-
22		AN51573-11552	• Damper	1	91202-
23		AN51573-11562	• Damper	1	91202-
24		AN51580-41010	• Relay	2	91202-
25		AN51700-A0380	• Evaporator Assembly	1	91202-
26		AN51439-D0041	• • O-ring	1	91202-
27		AN51439-D0051	• • O-ring	1	91202-
28		ANTB105160T1	• Screw	9	91202-
29		ANTN104300T1	• Screw	3	91202-
30		AN51581-42250	• Bolt	2	91202-
31		AN51852-40770	• Screw	2	91202-
32		AN51853-41521	• Nut	4	91202-
33		AN51870-40040	• Clamp	6	91202-
34		AN51870-40910	• Clamp	2	91202-
35		AN51871-40280	• Band	1	91202-

FIG. K0210-024018 ROPS Cab (Air Conditioner Unit)

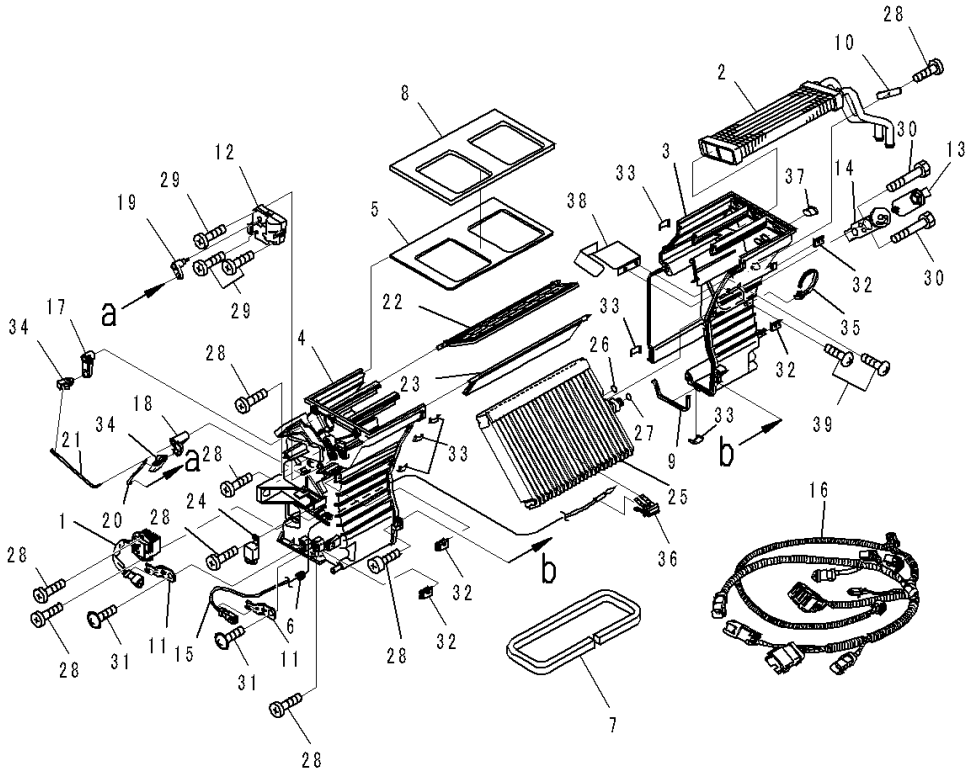

Index	Code	Part Number	Description	Qty	Serial Number
36		AN51873-40250	• Holder	1	91202-
37		AN51436-10320	• Cap	1	91202-
38		AN51151-47700	• Plate	1	91202-
39		ANKT+0410BA1	• Screw	2	91202-

FIG. K0210-024019 ROPS Cab (Air Conditioner Related Parts)

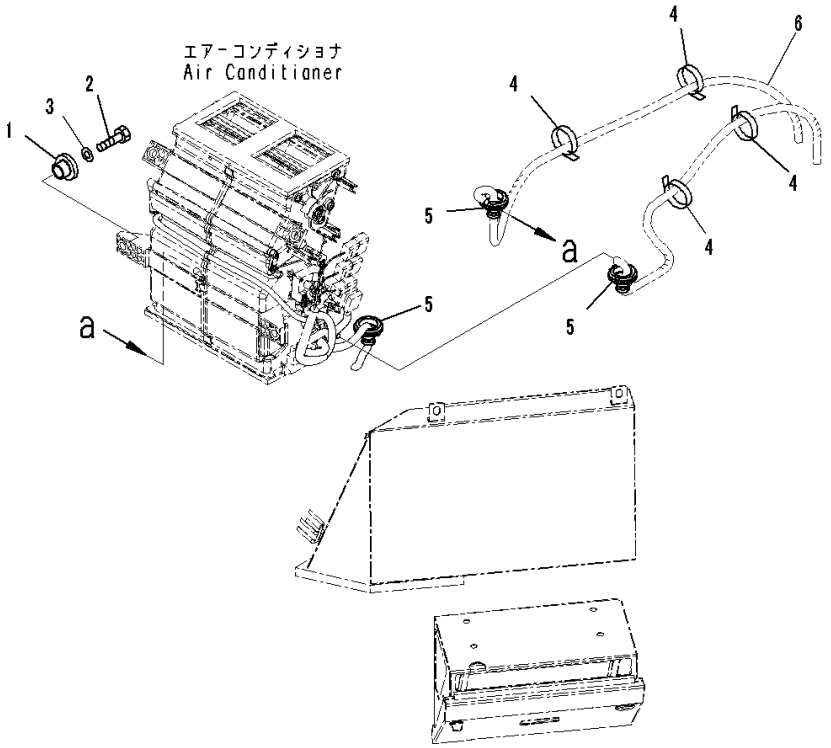

Index	Code	Part Number	Description	Qty	Serial Number
		Note: This list covers following specifications.			
		L.H. Door Sash Window			
		Both Sash Window			
		Both Sash Window, For EU Safety Regulation			
1		208-979-7540	Collar	4	91202-
2		01010-80830	Bolt	4	91202-
3		01643-30823	Washer	4	91202-
4		08034-40521	Band	4	91202-
5		08037-12036	Grommet	3	91202-
6		(423-07-31350)	Hose(Refer to Page 585)		-

FIG. K0210-024020 ROPS Cab (Blower)

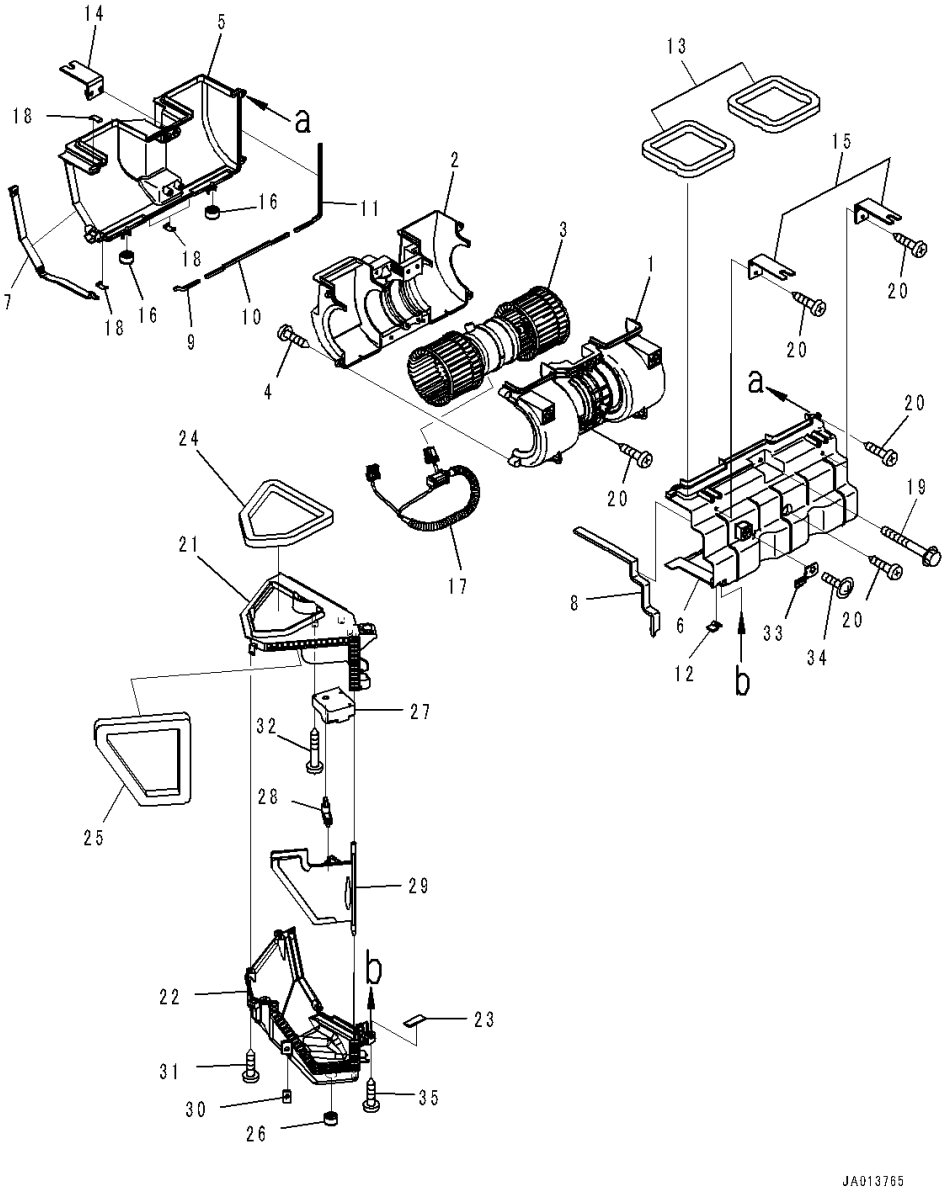

Index	Code	Part Number	Description	Qty	Serial Number
		Note: This list covers following specifications.			
		L.H. Door Sash Window			
		Both Sash Window			
		Both Sash Window, For EU Safety Regulation			
		423-07-31503	Blower Assembly	1	91202-
		423-07-31544	• Blower Assembly	1	91202-
		AN51104-10850	• • Blower Assembly	1	91202-
1		AN51153-40392	• • • Case	1	91202-
2		AN51153-40581	• • • Case	1	91202-
3		AN51500-11150	• • • Motor Assembly	1	91202-
4		ANTB105160TA	• • • Bolt	8	91202-
5		AN51153-40491	• • Case	1	91202-
6		AN51153-40501	• • Case	1	91202-
7		AN51191-58750	• • Packing	1	91202-
8		AN51191-58760	• • Packing	1	91202-
9		AN51191-62020	• • Packing	1	91202-
10		AN51191-62030	• • Packing	1	91202-
11		AN51191-62040	• • Packing	1	91202-
12		AN51191-59460	• • Packing	1	91202-
13		AN51194-53610	• • Packing	2	91202-
14		AN51240-12310	• • Bracket	1	91202-
15		AN51240-43460	• • Bracket	2	91202-
16		AN51420-43340	• • Valve	2	91202-
17		AN51550-18790	• • Wiring Harness	1	91202-
18		AN51870-40040	• • Clamp	4	91202-
19		ANBF00640DPA	• • Bolt	2	91202-
20		ANTB105160TA	• • Bolt	11	91202-
		423-07-31552	• Intake Box Assembly	1	91202-
21		AN51170-43791	• • Box	1	91202-
22		AN51170-43801	• • Box	1	91202-
23		AN51191-59460	• • • Packing	1	91202-
24		AN51194-53570	• • Packing	1	91202-
25		AN51194-53580	• • Packing	1	91202-
26		AN51420-43340	• • Valve	1	91202-
27		AN51502-40220	• • Actuator	1	91202-
28		AN51571-43611	• • Valve	1	91202-
29		AN51573-11570	• • Damper	1	91202-
30		AN51853-41521	• • Nut	1	91202-
31		ANTB105160TA	• • Bolt	4	91202-
32		ANTN104300TA	• • Bolt	3	91202-

FIG. K0210-024020 ROPS Cab (Blower)

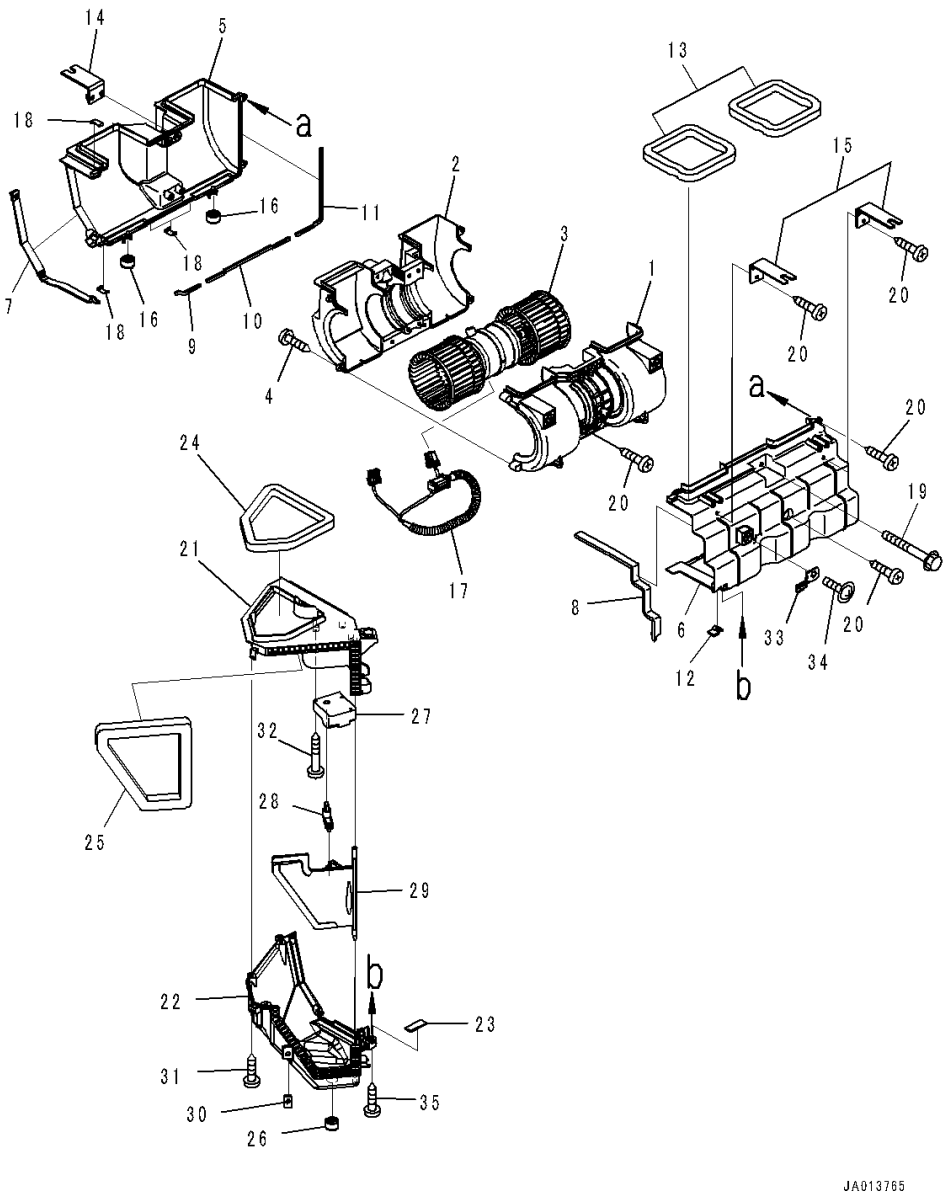

Index	Code	Part Number	Description	Qty	Serial Number
33		AN51259-41750	• Bracket	1	91202-
34		AN51852-40770	• Screw	1	91202-
35		ANTB105160TA	• Bolt	3	91202-

FIG. K0210-024021 ROPS Cab (Blower Mounting and Control Panel)

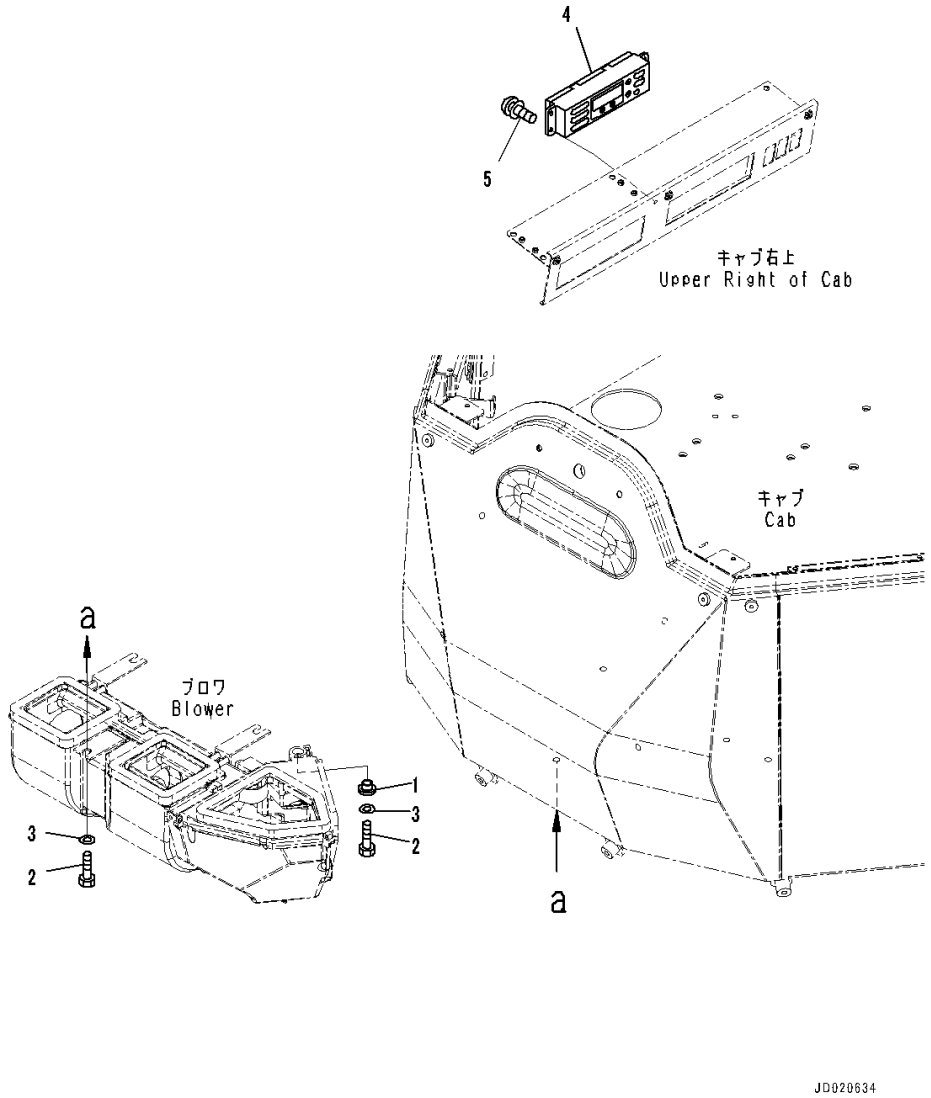

Index	Code	Part Number	Description	Qty	Serial Number
		Note: This list covers following specifications.			
		L.H. Door Sash Window			
		Both Sash Window			
		Both Sash Window, For EU Safety Regulation			
1		208-979-7540	Collar	1	91202-
2		01010-80825	Bolt	4	91202-
3		01643-30823	Washer	4	91202-
4		423-07-31563	Control Panel Assembly	1	91202-
5		01023-10514	Screw	4	91202-

FIG. K0210-024022 ROPS Cab (Air Conditioner Filter)

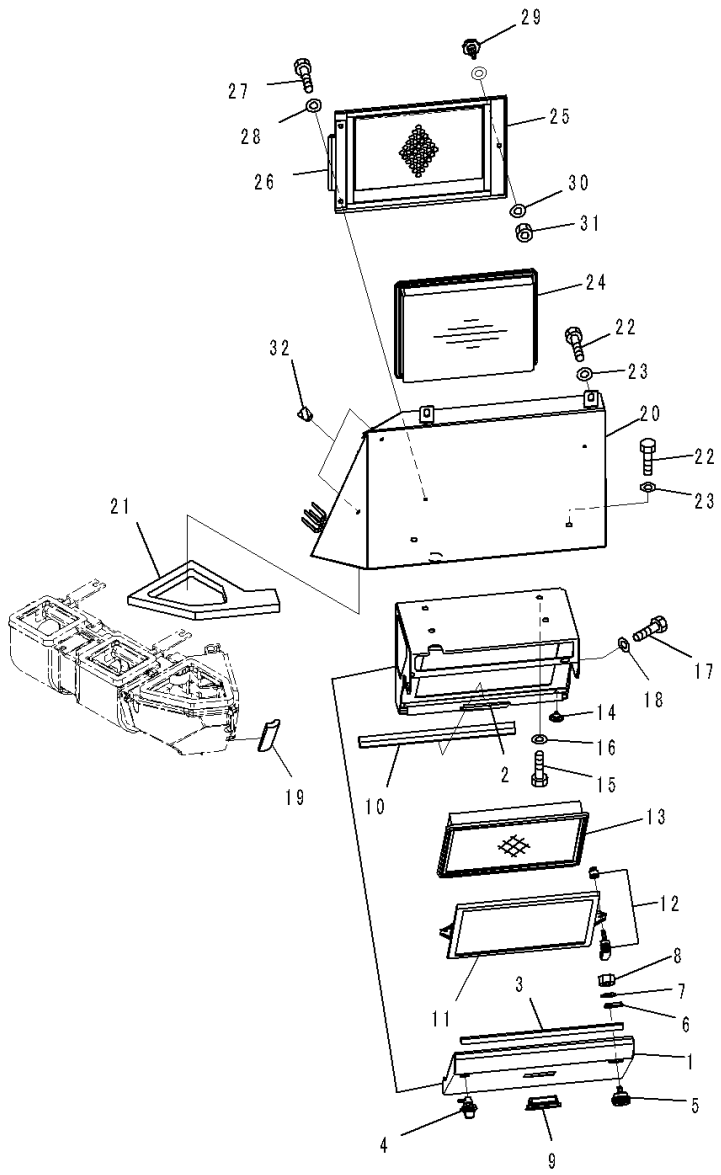

Index	Code	Part Number	Description	Qty	Serial Number
		Note: This list covers following specifications.			
		L.H. Door Sash Window			
		L.H. Door Sash Window, With Auto Air Conditioner			
		Both Sash Window			
		Both Sash Window, For EU Safety Regulation			
		Both Sash Window, With Auto Air Conditioner			
1		423-07-43400	Filter Assembly	1	91202-
2		425-07-31340	• Hinge, Welded	1	91202-
3		423-07-31880	• Sheet	1	91202-
4		425-07-31350	• Lock	1	91202-
5		23B-952-1980	• Lock	1	91202-
6		23B-951-5360	• Plate	1	91202-
7		01643-31032	• Washer	1	91202-
8		01580-11008	• Nut	1	91202-
9		418-926-3660	• Handle	1	91202-
10		423-07-33460	• Seal	1	91202-
11		423-07-33422	• Bracket	1	91202-
12		423-925-4530	• Lock Assembly	2	91202-
13		426-07-32441	• Filter	1	91202-
14		426-56-21990	• Plug	2	91202-
15		01010-81020	Bolt	4	91202-
16		01643-31032	Washer	4	91202-
17		01010-80616	Bolt	1	91202-
18		01643-30623	Washer	1	91202-
19		423-07-31871	Sheet	1	91202-
20		423-07-31233	Box	1	91202-
21		423-07-31242	Sheet	1	91202-
22		01010-81020	Bolt	4	91202-
23		01643-31032	Washer	4	91202-
24		426-07-32441	Filter	1	91202-
25		423-07-31673	Cover	1	91202-
26		416-09-12220	• Hinge, Welded	1	91202-
27		01010-80616	Bolt	2	91202-
28		01643-30623	Washer	2	91202-
29		421-09-31320	Screw	1	91202-
30		01643-30623	Washer	1	91202-
31		01598-00608	Nut	1	91202-
32		07049-01012	Plug	2	91202-

FIG. K0210-024023 ROPS Cab (Air Conditioner Cover)

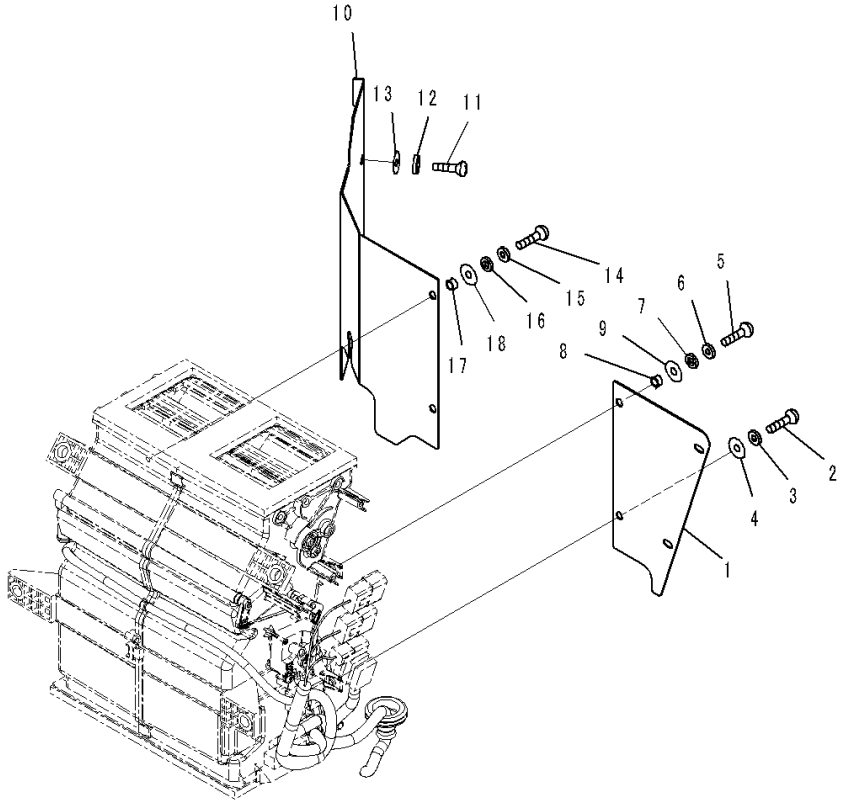

エアーコンディショナユニット
Air Conditioner Unit

Index	Code	Part Number	Description	Qty	Serial Number
		Note: This list covers following specifications.			
		L.H. Door Sash Window			
		L.H. Door Sash Window, With Auto Air Conditioner			
		Both Sash Window			
		Both Sash Window, For EU Safety Regulation			
		Both Sash Window, With Auto Air Conditioner			
1		423-925-4563	Cover, L.H.	1	91202-
2		01225-70620	Screw, Philips Head	2	91202-
3		23S-55-51970	Washer	2	91202-
4		23S-55-55510	Washer	2	91202-
5		01225-70620	Screw, Philips Head	2	91202-
6		23S-55-51970	Washer	2	91202-
7		426-56-31870	Washer	2	91202-
8		426-56-31890	Collar	2	91202-
9		209-43-51640	Washer	2	91202-
10		423-925-4574	Cover, R.H.	1	91202-
11		01225-70620	Screw, Philips Head	1	91202-
12		23S-55-51970	Washer	1	91202-
13		23S-55-55510	Washer	1	91202-
14		01225-70620	Screw, Philips Head	2	91202-
15		23S-55-51970	Washer	2	91202-
16		426-56-31870	Washer	2	91202-
17		426-56-31890	Collar	2	91202-
18		209-43-51640	Washer	2	91202-

FIG. K0210-024024 ROPS Cab (Brake Pedal)

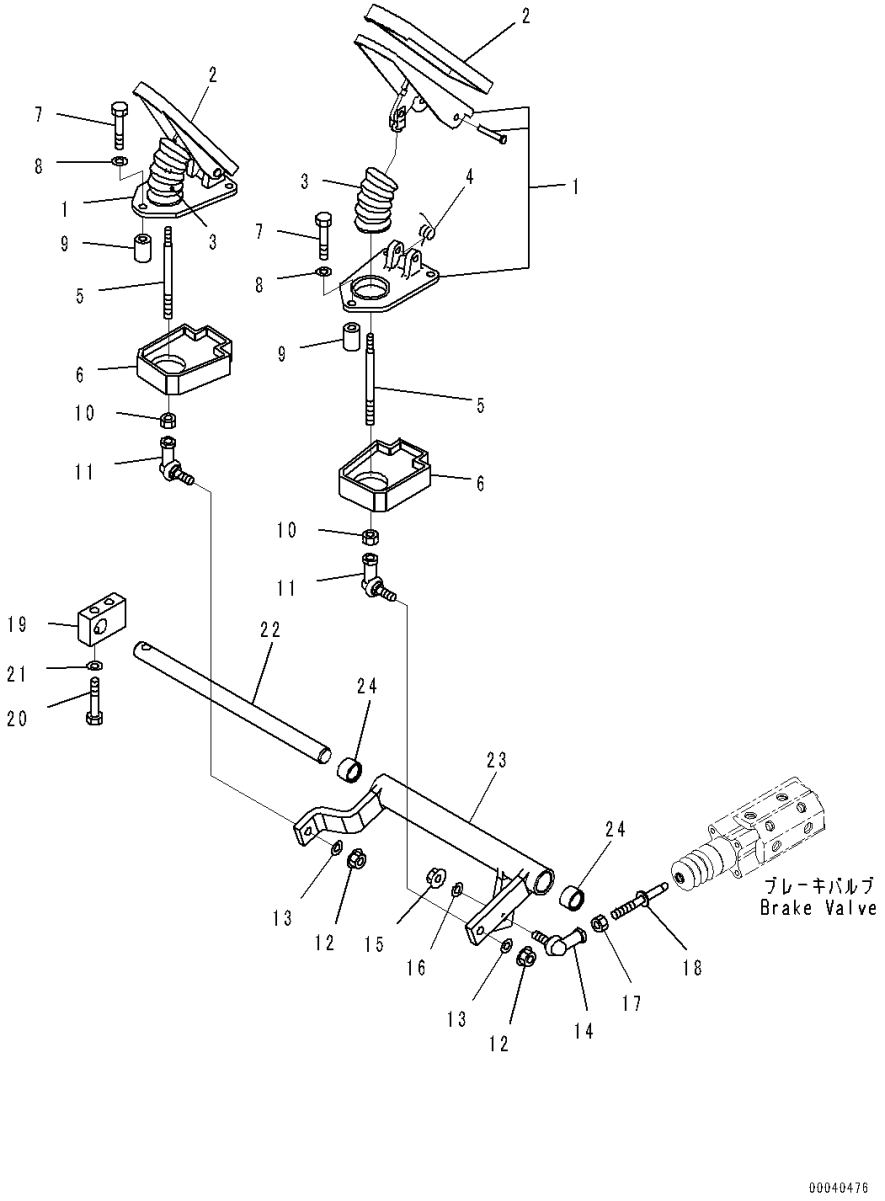

Index	Code	Part Number	Description	Qty	Serial Number
		Note: This list covers following specifications.			
		L.H. Door Sash Window			
		L.H. Door Sash Window, With Auto Air Conditioner			
		Both Sash Window			
		Both Sash Window, For EU Safety Regulation			
		Both Sash Window, With Auto Air Conditioner			
1		418-43-27191	Pedal	2	91202-
2		363-43-37410	• Pad	1	91202-
3		417-43-27410	• Boot	1	91202-
4		417-43-27420	• Spring	1	91202-
5		418-43-27140	• Rod	1	91202-
6		423-43-47361	Sheet	2	91202-
7		01010-81065	Bolt	6	91202-
8		01643-31032	Washer	6	91202-
9		423-43-47350	Spacer	6	91202-
10		01582-11210	Nut	2	91202-
11		04256-41230	Joint, Ball	2	91202-
12		01595-01210	Nut, Flanged	2	91202-
13		01643-31232	Washer	2	91202-
14		04256-41230	Joint, Ball	1	91202-
15		01595-01210	Nut, Flanged	1	91202-
16		01643-31232	Washer	1	91202-
17		01582-11210	Nut	1	91202-
18		418-43-37140	Rod	1	91202-
19		418-43-37130	Plate	1	91202-
20		01010-81270	Bolt	2	91202-
21		01643-31232	Washer	2	91202-
22		417-43-27120	Shaft	1	91202-
23		423-43-47341	Lever	1	91202-
24		06124-02520	Bearing	2	91202-

FIG. K0210-024025 ROPS Cab (Accelerator Pedal Mounting) (1/2)

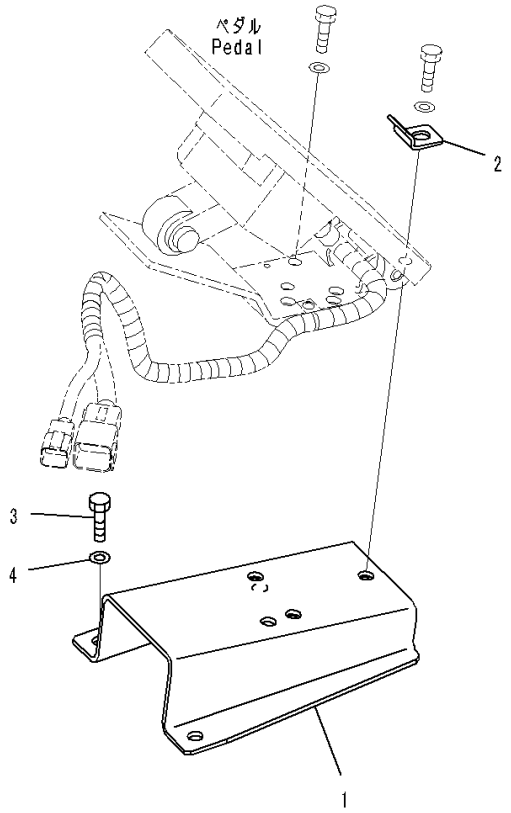

Index	Code	Part Number	Description	Qty	Serial Number
		Note: This list covers following specifications.			
		L.H. Door Sash Window			
		L.H. Door Sash Window, With Auto Air Conditioner			
		Both Sash Window			
		Both Sash Window, For EU Safety Regulation			
		Both Sash Window, With Auto Air Conditioner			
1		423-43-42410	Bracket	1	91202-
2		42C-54-22330	Plate	1	91202-
3		01010-80820	Bolt	3	91202-
4		01643-30823	Washer	3	91202-

FIG. K0210-024026 ROPS Cab (Accelerator Pedal)

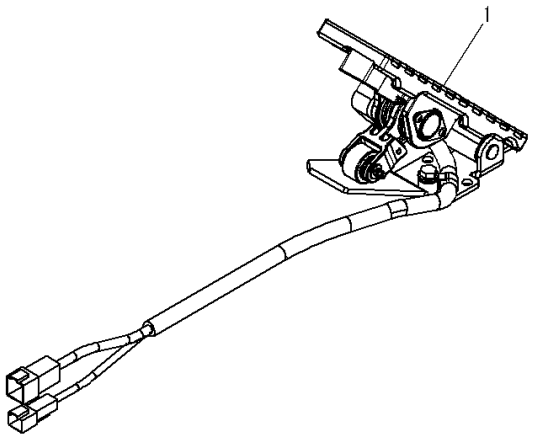

Index	Code	Part Number	Description	Qty	Serial Number
		Note: This list covers following specifications.			
		L.H. Door Sash Window			
		L.H. Door Sash Window, With Auto Air Conditioner			
		Both Sash Window			
		Both Sash Window, For EU Safety Regulation			
		Both Sash Window, With Auto Air Conditioner			
1		702-16-07022	Pedal Assembly	1	91202-

FIG. K0210-024027 ROPS Cab (Accelerator Pedal Mounting) (2/2)

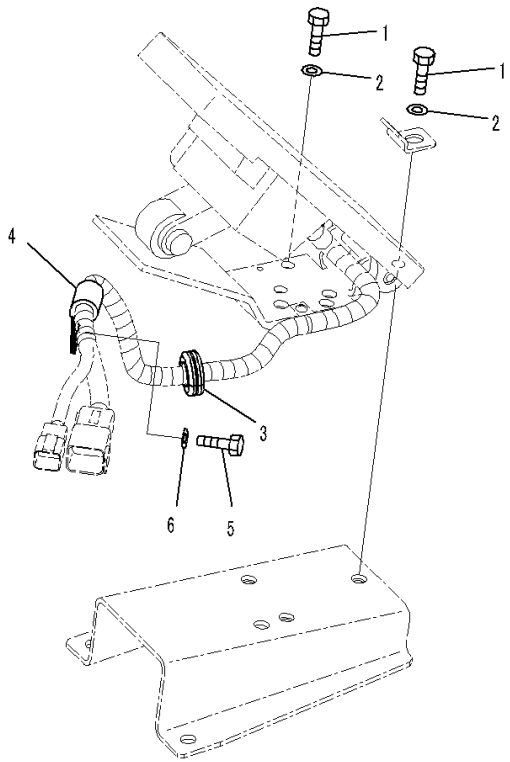

JD033601

Index	Code	Part Number	Description	Qty	Serial Number
		Note: This list covers following specifications.			
		L.H. Door Sash Window			
		L.H. Door Sash Window, With Auto Air Conditioner			
		Both Sash Window			
		Both Sash Window, For EU Safety Regulation			
		Both Sash Window, With Auto Air Conditioner			
1		01010-80820	Bolt	3	91202-
2		01643-30823	Washer	3	91202-
3		22W-22-17460	Grommet	1	91202-
4		04434-51210	Clip	1	91202-
5		01010-81016	Bolt	1	91202-
6		01643-31032	Washer	1	91202-

FIG. K0210-024028 ROPS Cab (Transmission Control Switch)

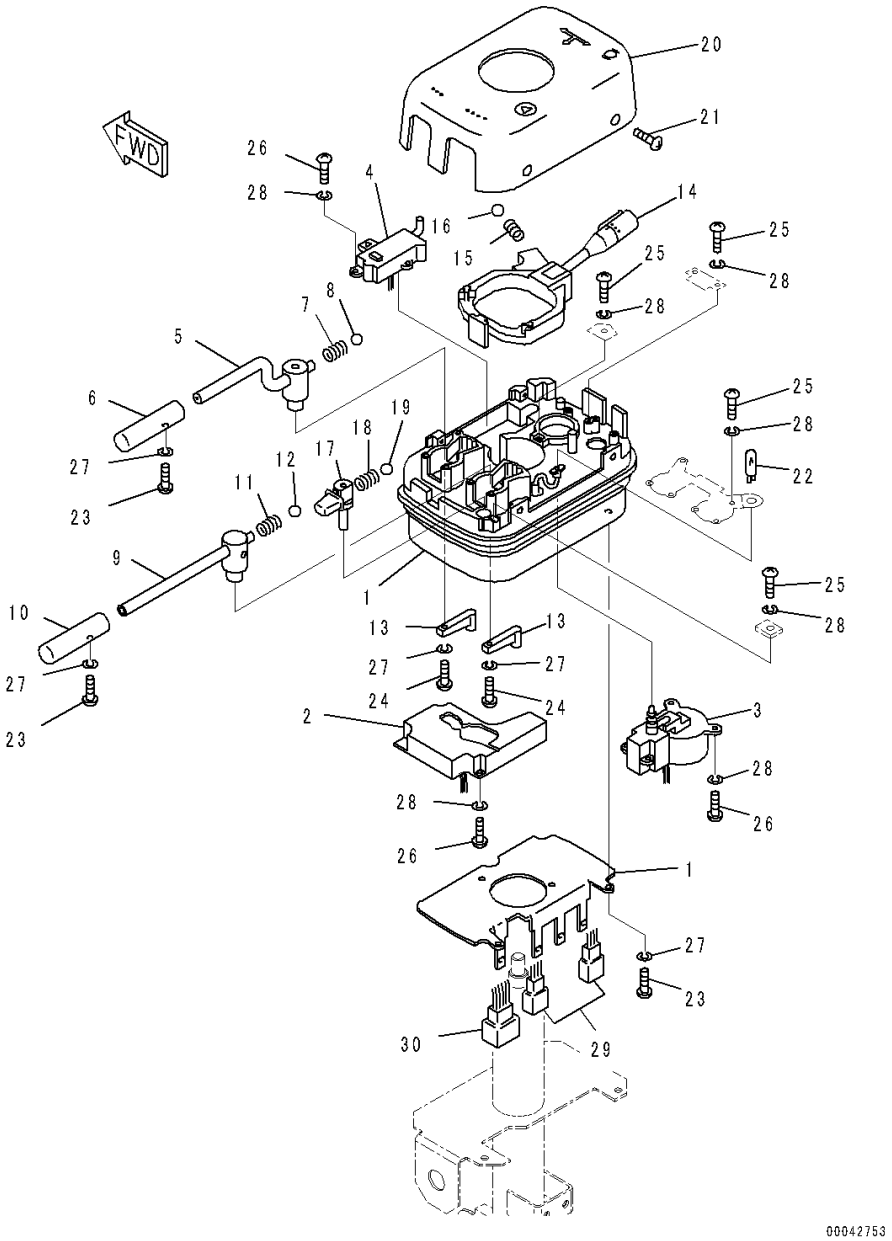

Index	Code	Part Number	Description	Qty	Serial Number
		Note: This list covers following specifications.			
		L.H. Door Sash Window			
		L.H. Door Sash Window, With Auto Air Conditioner			
		Both Sash Window			
		Both Sash Window, For EU Safety Regulation			
		Both Sash Window, With Auto Air Conditioner			
1		423-43-46212	Switch Assembly	1	91202-
2		417-43-26212	• Switch	1	91202-
3		417-43-26221	• Switch, Lamp	1	91202-
4		417-43-26230	• Switch, Hazard And Turn Signal	1	91202-
		421-43-26141	• Lever Assembly	1	91202-
5		421-43-26151	• • Lever	1	91202-
6		417-43-26280	• • Grip	1	91202-
7		417-43-26290	• • Spring	1	91202-
8		417-43-26310	• • Ball	1	91202-
		421-43-36160	• Lever Assembly	1	91202-
9		421-43-36170	• • Level, Shift	1	91202-
10		417-43-26280	• • Grip	1	91202-
11		417-43-26290	• • Spring	1	91202-
12		417-43-26310	• • Ball	1	91202-
13		417-43-26320	• Arm, Magnet	2	91202-
14		417-43-26332	• Lever Assembly, Turn	1	91202-
15		417-43-26340	• Spring	1	91202-
16		417-43-26350	• Ball	1	91202-
17		417-43-26360	• Knob Assembly	1	91202-
18		417-43-26370	• Spring	1	91202-
19		417-43-26380	• Ball	1	91202-
20		421-43-46120	• Case	1	91202-
21		417-43-26410	• Screw	4	91202-
22		7815-11-1010	• Bulb, 1.4watt	1	91202-
23		01220-40308	• Screw, Philips Head	6	91202-
24		01220-40312	• Screw	2	91202-
25		01220-40408	• Screw	10	91202-
26		01220-40412	• Screw, Philips Head	11	91202-
27		01601-20307	• Washer	8	91202-
28		01601-20410	• Washer	21	91202-
29		08055-10681	• Connector Body Assembly, Male	2	91202-
30		08055-11481	• Connector Body Assembly, Male	1	91202-

FIG. K0210-024029 ROPS Cab (Steering Column Mounting)

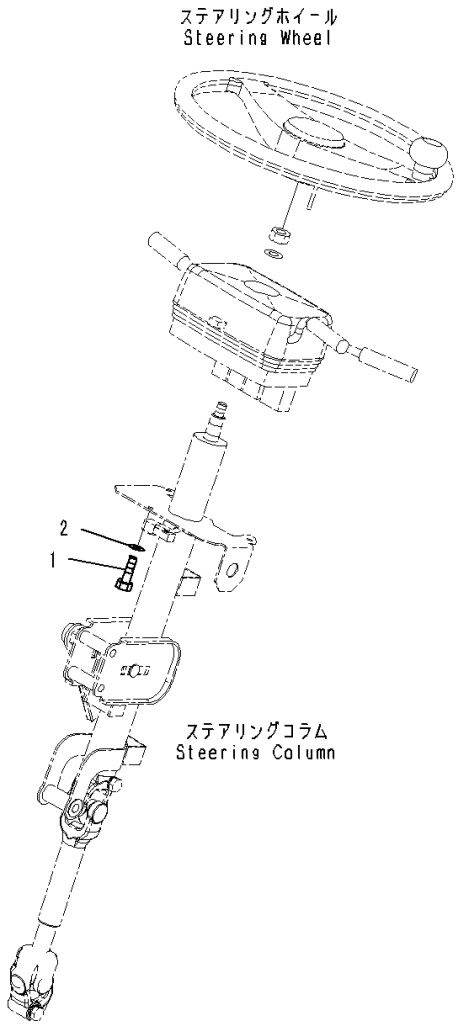

Index	Code	Part Number	Description	Qty	Serial Number
		Note: This list covers following specifications.			
		L.H. Door Sash Window			
		L.H. Door Sash Window, With Auto Air Conditioner			
		Both Sash Window			
		Both Sash Window, For EU Safety Regulation			
		Both Sash Window, With Auto Air Conditioner			
1		01010-80616	Bolt	3	91202-
2		01643-30623	Washer	3	91202-

FIG. K0210-024030 ROPS Cab (Wiper Switch)

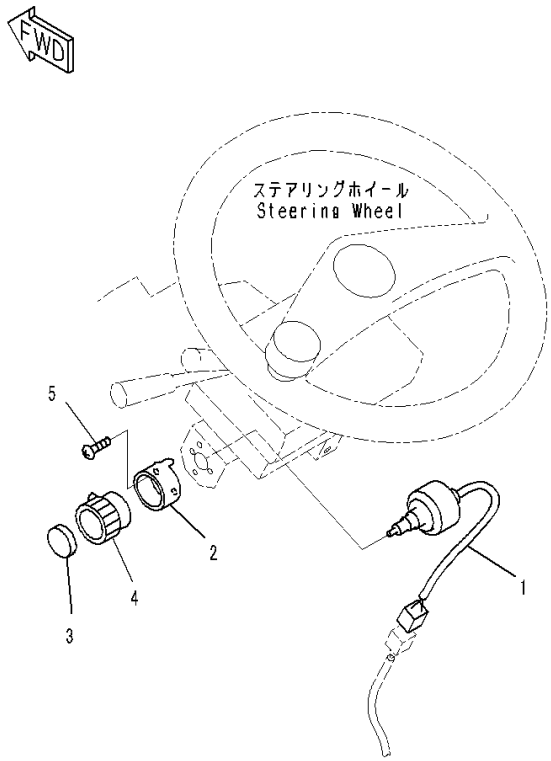

PW0D461

Index	Code	Part Number	Description	Qty	Serial Number
		Note: This list covers following specifications.			
		L.H. Door Sash Window			
		L.H. Door Sash Window, With Auto Air Conditioner			
		Both Sash Window			
		Both Sash Window, For EU Safety Regulation			
		Both Sash Window, With Auto Air Conditioner			
		421-06-26110	Switch Assembly	1	91202-
1		421-06-26120	• Switch	1	91202-
2		421-06-26130	• Collar	1	91202-
3		421-06-26140	• Cap	1	91202-
4		421-06-26150	• Knob Assembly	1	91202-
5		421-06-26160	Screw	2	91202-

FIG. K0210-024031 ROPS Cab (Steering Column)

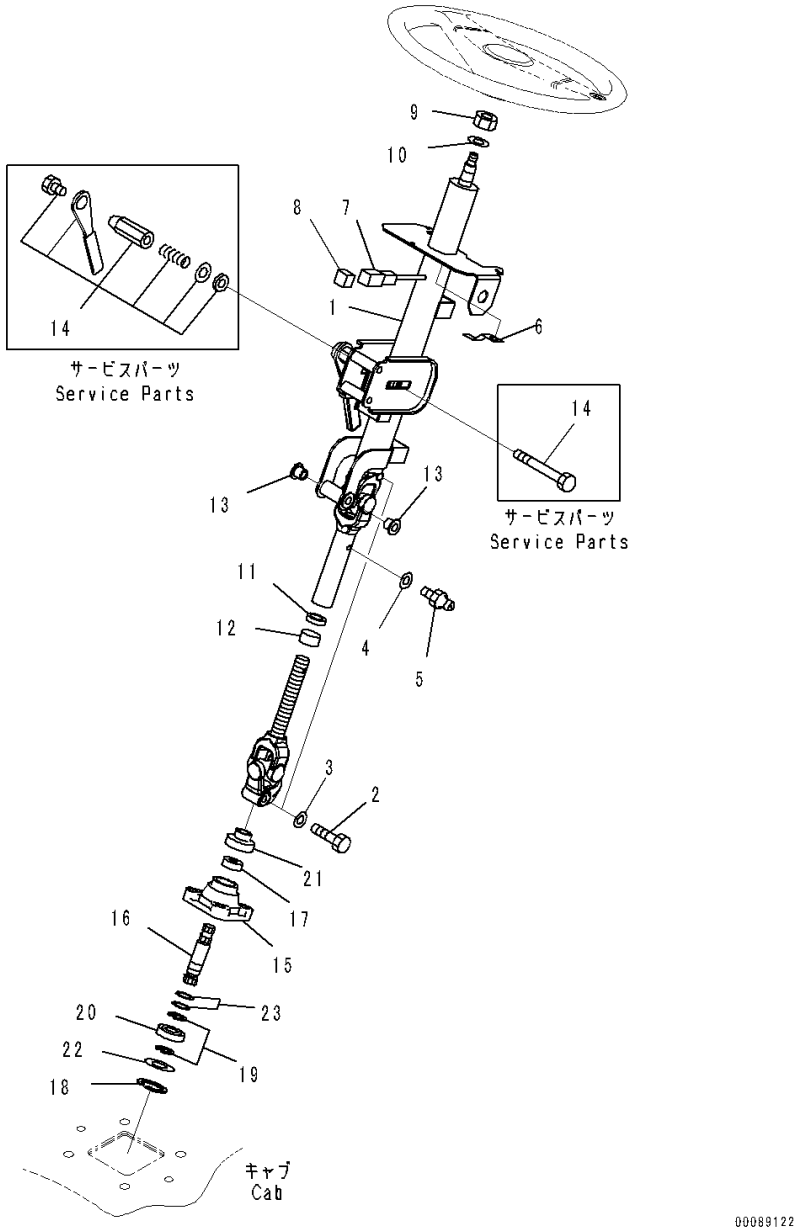

Index	Code	Part Number	Description	Qty	Serial Number
		Note: This list covers following specifications.			
		L.H. Door Sash Window			
		L.H. Door Sash Window, With Auto Air Conditioner			
		Both Sash Window			
		Both Sash Window, For EU Safety Regulation			
		Both Sash Window, With Auto Air Conditioner			
1		421-40-32314	Column Assembly	1	91202-
2		01050-51040	• Bolt	2	91202-
3		01602-21030	• Washer	2	91202-
4		01643-30623	• Washer	1	91202-
5		07020-00001	• Fitting, Grease	1	91202-
6		08193-21012	• Clip	1	91202-
7	C1		• Connector	1	91202-
8		08191-00770	• Plug, Connector	1	91202-
9		421-40-12440	• Nut	1	91202-
10		421-40-12450	• Washer	1	91202-
11		421-40-12550	• Seal	1	91202-
12		421-40-12560	• Cover	1	91202-
13		421-40-32410	• Bushing	2	91202-
14		421-40-32420	• Lever Assembly	1	91202-
15		417-40-22131	Column Assembly	1	91202-
16		417-40-22171	• Shaft	1	91202-
17		417-40-22180	• Seal, Oil	1	91202-
18		417-40-22190	• Ring, Snap	1	91202-
19		417-40-22210	• Ring, Snap	2	91202-
20		417-40-22220	• Bearing	1	91202-
21		417-40-22290	• Cover	1	91202-
22		417-40-22310	• Shim	1	91202-
		417-40-22320	• Shim	1	91202-
23		417-40-22330	• Shim	2	91202-
		417-40-22340	• Shim	2	91202-
		417-40-22350	• Shim	2	91202-

FIG. K0210-024032 ROPS Cab (Mounting) (1/2)

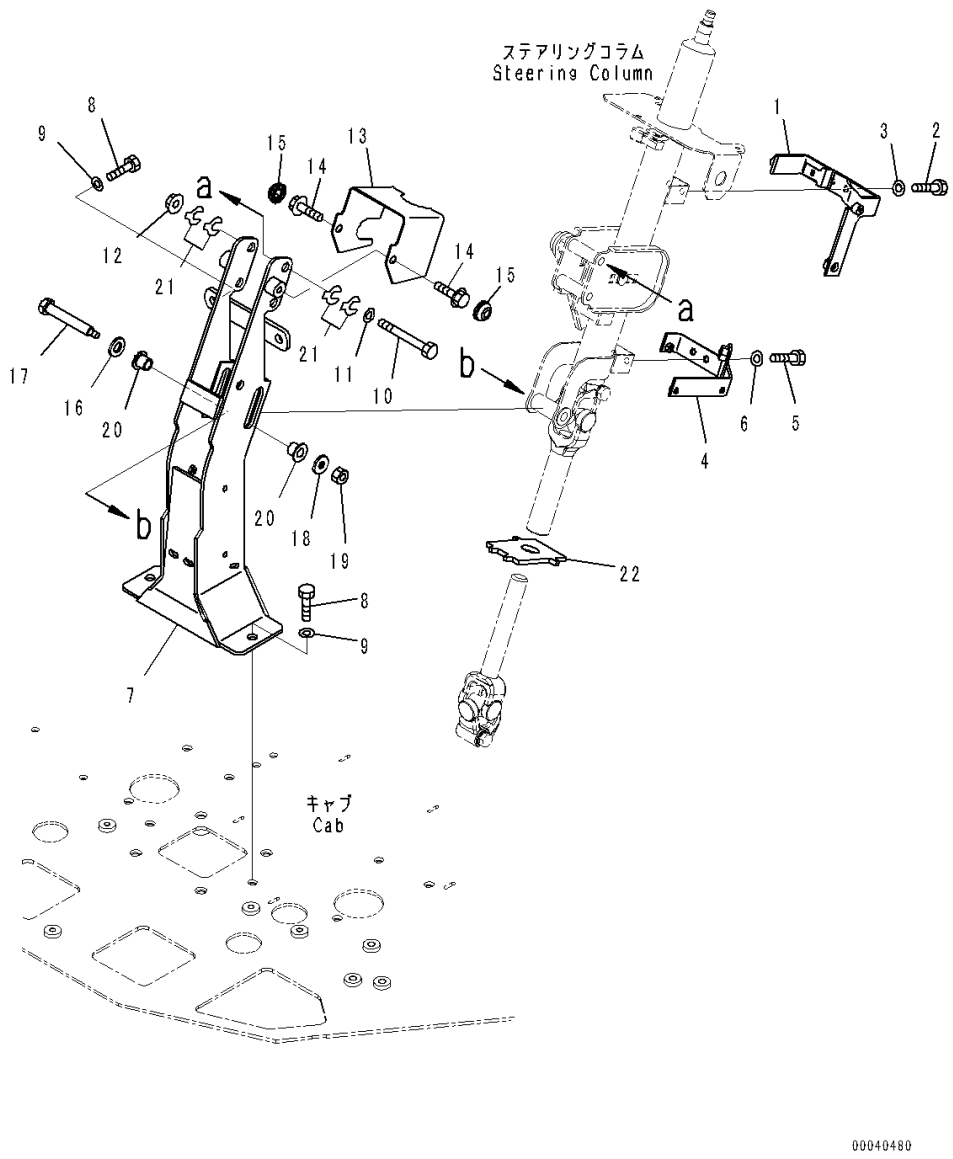

Index	Code	Part Number	Description	Qty	Serial Number
		Note: This list covers following specifications.			
		L.H. Door Sash Window			
		L.H. Door Sash Window, With Auto Air Conditioner			
		Both Sash Window			
		Both Sash Window, For EU Safety Regulation			
		Both Sash Window, With Auto Air Conditioner			
1		423-40-42172	Bracket	1	91202-
2		01010-80616	Bolt	2	91202-
3		01643-30623	Washer	2	91202-
4		423-40-42210	Support	1	91202-
5		01010-80616	Bolt	2	91202-
6		01643-30623	Washer	2	91202-
7		423-40-42190	Bracket	1	91202-
8		01010-81030	Bolt	4	91202-
9		01643-31032	Washer	4	91202-
10		01010-81085	Bolt	2	91202-
11		01643-31032	Washer	2	91202-
12		01594-01008	Nut	2	91202-
13		423-40-42180	Plate	1	91202-
14		01435-41016	Bolt	2	91202-
15		363-54-31450	Cap	2	91202-
16		01643-31232	Washer	1	91202-
17		423-40-32160	Bolt	1	91202-
18		22W-43-17330	Washer	1	91202-
19		01580-10806	Nut	1	91202-
20		421-40-32410	Bushing	2	91202-
21		421-40-22650	Shim, T=0.5mm	8	91202-
22		423-40-42150	Rubber	1	91202-

FIG. K0210-024033 ROPS Cab (Steering Column Cover)

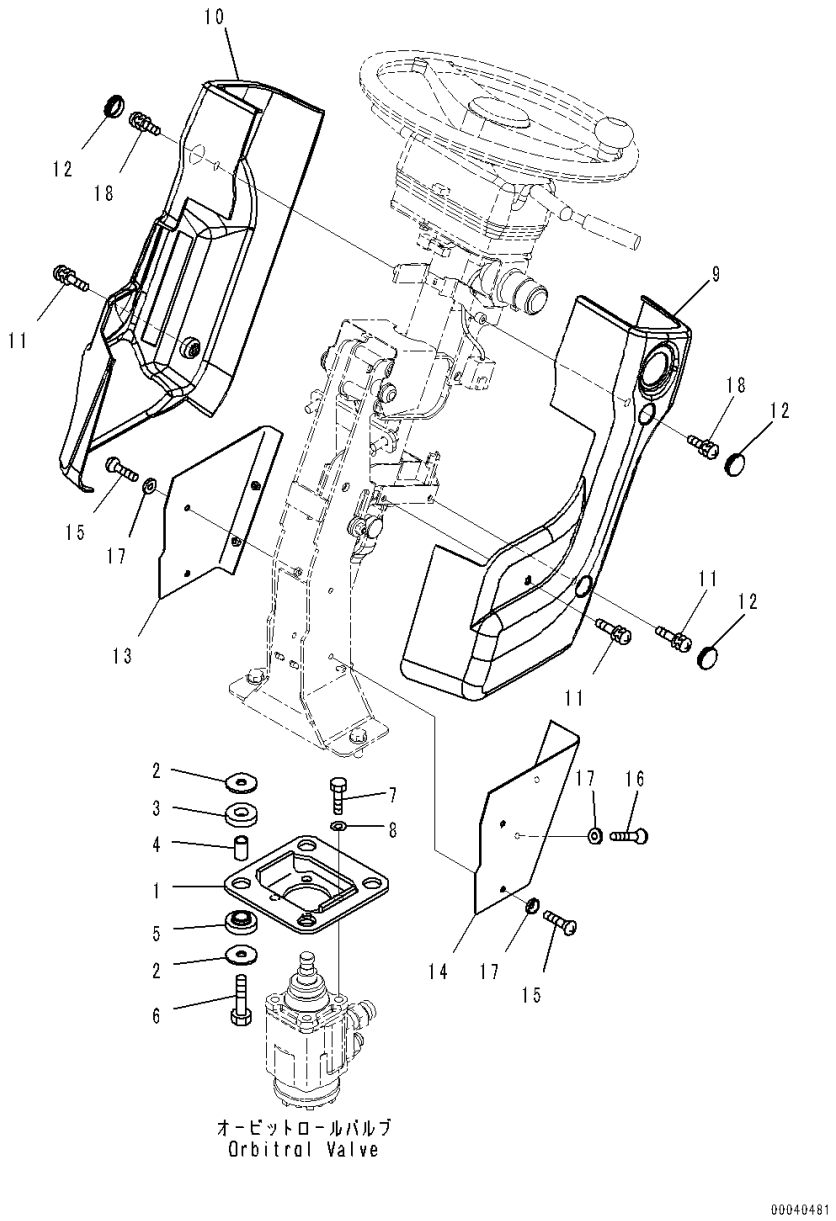

Index	Code	Part Number	Description	Qty	Serial Number
		Note: This list covers following specifications.			
		L.H. Door Sash Window			
		L.H. Door Sash Window, With Auto Air Conditioner			
		Both Sash Window			
		Both Sash Window, For EU Safety Regulation			
		Both Sash Window, With Auto Air Conditioner			
1		423-40-42160	Bracket	1	91202-
2		419-43-17920	Washer	8	91202-
3		417-62-13620	Cushion	4	91202-
4		417-62-14130	Spacer	4	91202-
5		419-43-17930	Cushion	4	91202-
6		01010-81250	Bolt	4	91202-
7		02010-70638	Bolt	4	91202-
8		01643-31032	Washer	4	91202-
9		421-54-32313	Cover, L.H.	1	91202-
10		421-54-32323	Cover, R.H.	1	91202-
11		421-09-21460	Screw	3	91202-
12		22U-54-25140	Cap	3	91202-
13		423-40-42120	Cover	1	91202-
14		423-40-42140	Cover	1	91202-
15		01225-70616	Screw, Philips Head	4	91202-
16		01225-70612	Screw, Philips Head	2	91202-
17		23S-55-51970	Washer	6	91202-
18		421-09-21440	Screw	2	91202-

FIG. K0210-024034 ROPS Cab (Orbitrol Valve)

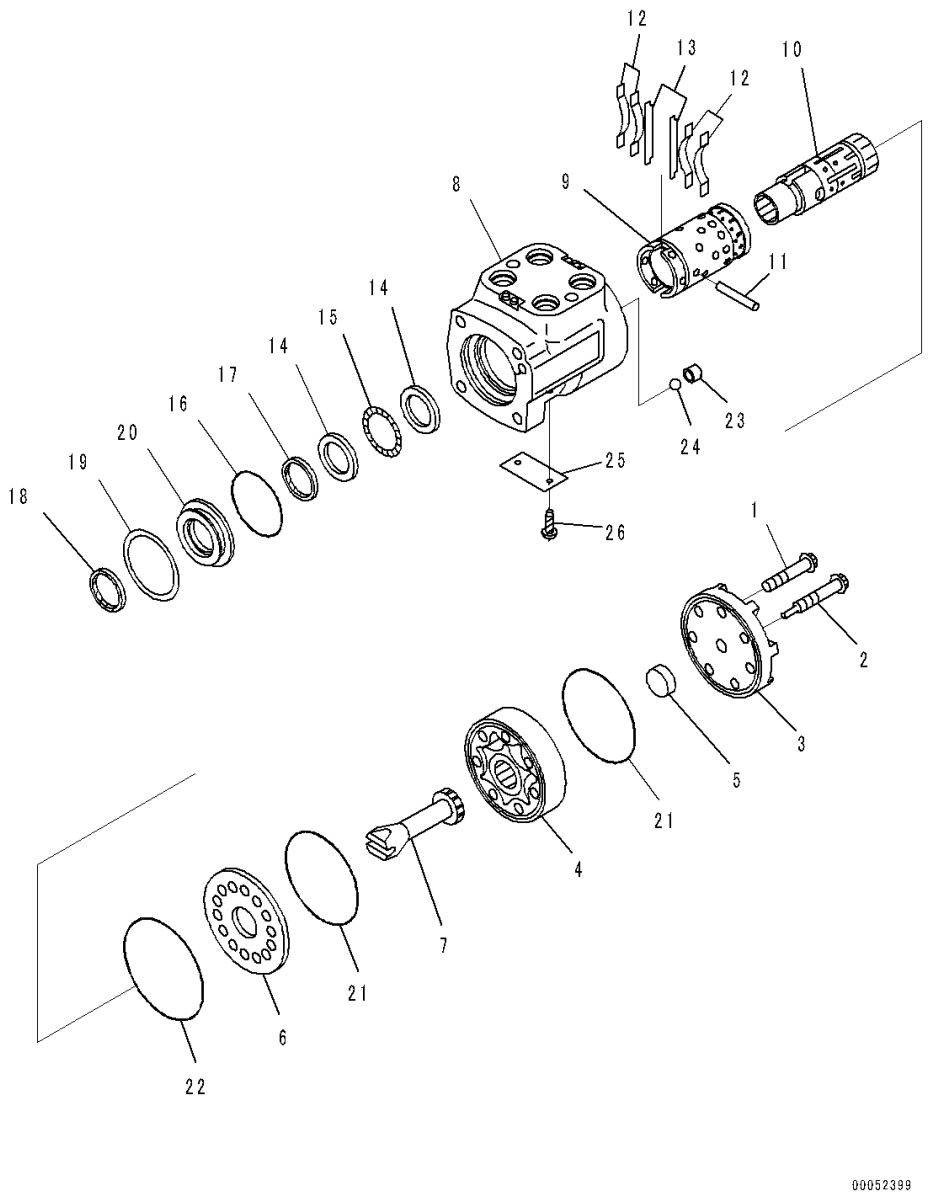

Index	Code	Part Number	Description	Qty	Serial Number
		Note: This list covers following specifications.			
		L.H. Door Sash Window			
		L.H. Door Sash Window, With Auto Air Conditioner			
		Both Sash Window			
		Both Sash Window, For EU Safety Regulation			
		Both Sash Window, With Auto Air Conditioner			
		423-64-45601	Valve	1	91202-
1	C1		• Screw	6	91202-
2	C1		• Retainer	1	91202-
3	C1		• End Cap Subassembly	1	91202-
4	C1		• Gerotor	1	91202-
5	C1		• Spacer	1	91202-
6	C1		• Spacer	1	91202-
7	C1		• Drive	1	91202-
	C1		• Control	1	91202-
8	C1		• • Housing	1	91202-
9	C1		• • Sleeve	1	91202-
10	C1		• • Spool	1	91202-
11	C1		• Pin	1	91202-
12	C1		• Spring	4	91202-
13	C1		• Spring	2	91202-
14	C1		• Race, (Kit : K10)	2	91202-
15	C1		• Needle, (Kit : K10)	1	91202-
16	C1		• O-ring, (Kit : K11)	1	91202-
17	C1		• Seal, (Kit : K11)	1	91202-
18	C1		• Seal, (Kit : K11)	1	91202-
19	C1		• Ring	1	91202-
20	C1		• Seal	1	91202-
21	C1		• O-ring, (Kit : K11)	2	91202-
22	C1		• O-ring, (Kit : K11)	1	91202-
23	C1		• Screw	1	91202-
24	C1		• Ball	1	91202-
25	C1		• Plate	1	91202-
26	C1		• Rivet	2	91202-

FIG. K0210-024035 ROPS Cab (Tee and Union)

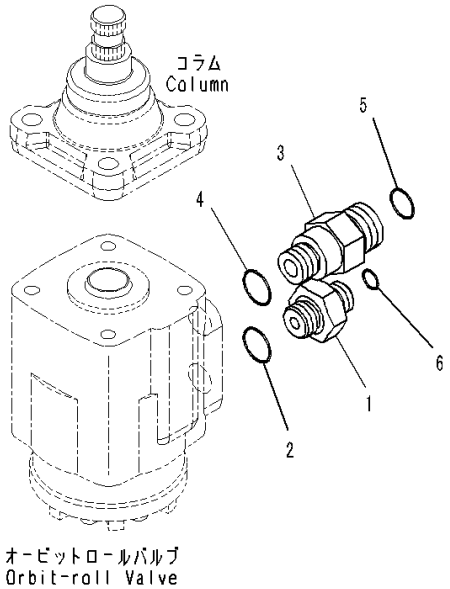

JD033610

Index	Code	Part Number	Description	Qty	Serial Number
		Note: This list covers following specifications.			
		L.H. Door Sash Window			
		L.H. Door Sash Window, With Auto Air Conditioner			
		Both Sash Window			
		Both Sash Window, For EU Safety Regulation			
		Both Sash Window, With Auto Air Conditioner			
1		424-62-31170	Nipple	1	91202-
2		415-62-11560	O-ring	1	91202-
3		423-62-41190	Nipple	1	91202-
4		415-62-11560	O-ring	1	91202-
5		02896-11015	O-ring	1	91202-
6		02896-11009	O-ring	1	91202-

FIG. K0210-024036 ROPS Cab (Electric Parts)

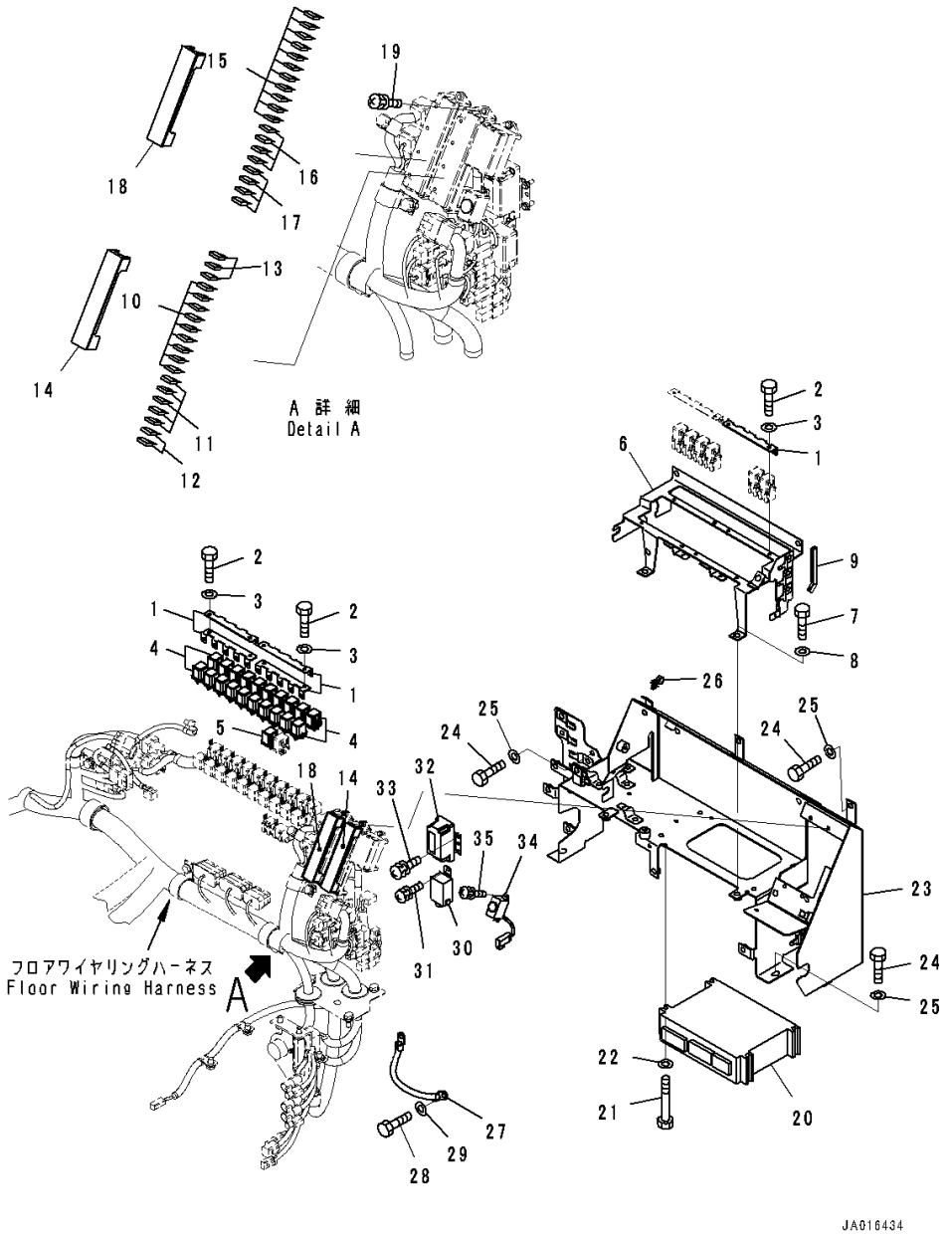

Index	Code	Part Number	Description	Qty	Serial Number
		Note: This list covers following specifications.			
		L.H. Door Sash Window			
		L.H. Door Sash Window, With Auto Air Conditioner			
		Both Sash Window			
		Both Sash Window, For EU Safety Regulation			
		Both Sash Window, With Auto Air Conditioner			
1		569-06-61180	Bracket	5	91202-
2		01010-80616	Bolt	6	91202-
3		01643-30623	Washer	6	91202-
4		569-06-61960	Relay	20	91202-
5		569-06-61970	Relay	1	91202-
6		423-06-42633	Bracket	1	91202-
7		01010-81020	Bolt	4	91202-
8		01643-31032	Washer	4	91202-
9		423-06-42420	Finisher	1	91202-
10		283-06-16190	Fuse Element, 10Amp.	9	91202-
11		22W-06-13160	Fuse, 20Amp.	5	91202-
12		08041-03000	Fuse, 30Amp.	2	91202-
13		08041-00500	Fuse, 5Amp.	3	91202-
14		283-06-16120	Cover, Fuse Box 15Pole	1	91202-
15		283-06-16190	Fuse Element, 10Amp.	11	91202-
16		22W-06-13160	Fuse, 20Amp.	4	91202-
17		08041-00500	Fuse, 5Amp.	4	91202-
18		283-06-16120	Cover, Fuse Box 15Pole	1	91202-
19		01023-60620	Screw	4	91202-
20		7823-36-3009	Controller	1	91202-
21		01010-80880	Bolt	4	91202-
22		01643-30823	Washer	4	91202-
23		423-06-42622	Bracket	1	91202-
24		01010-81020	Bolt	7	91202-
25		01643-31032	Washer	7	91202-
26		08059-00310	Clip	1	91202-
27		08028-12025	Cable, Ground	1	91202-
28		01010-81016	Bolt	2	91202-
29		01643-31032	Washer	2	91202-
30		416-06-22250	Flasher	1	91202-
31		01023-80516	Screw	1	91202-
32		421-06-26220	Relay	1	91202-
33		01023-60616	Screw	2	91202-
34		23S-05-35320	Buzzer	1	91202-

FIG. K0210-024036 ROPS Cab (Electric Parts)

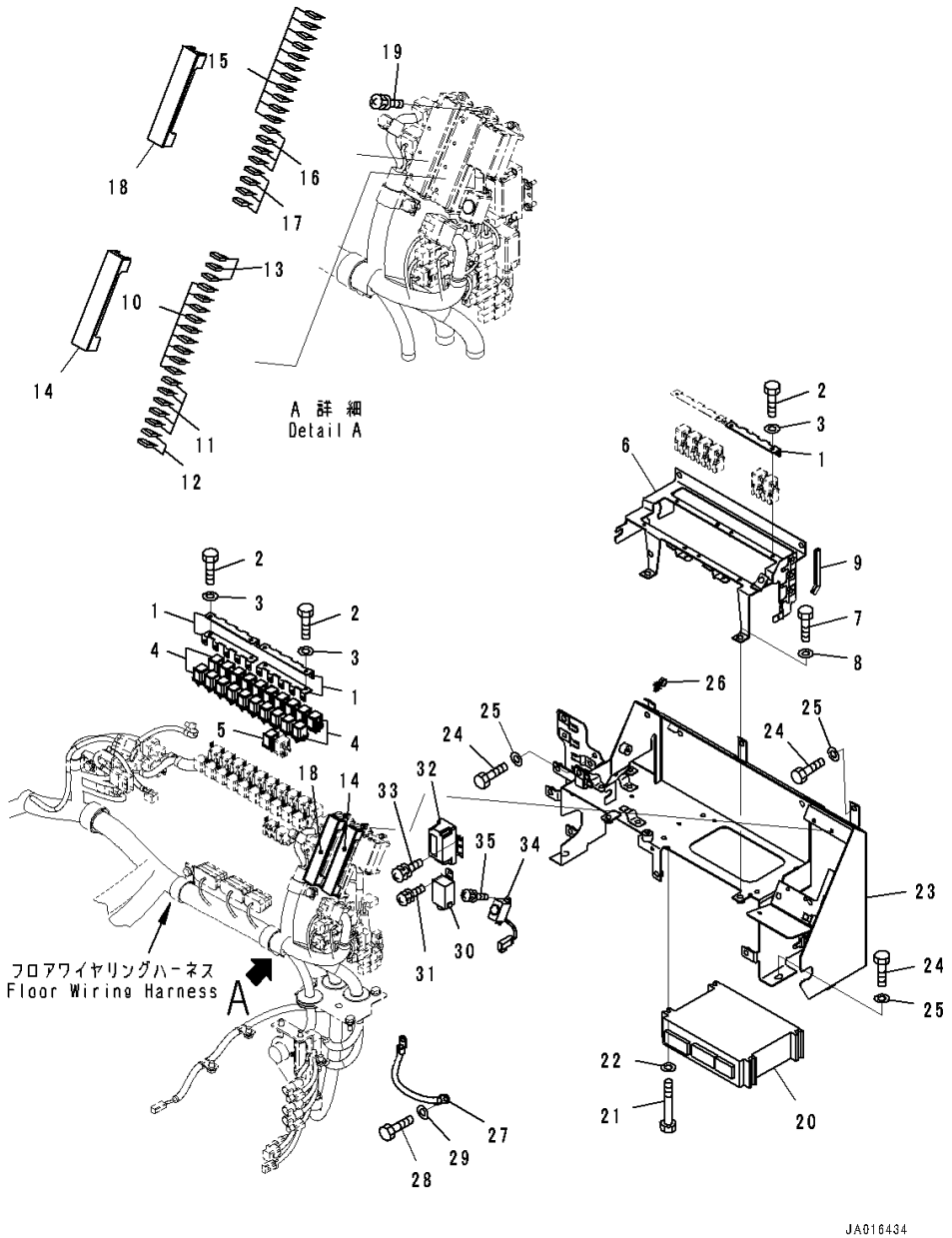

Index	Code	Part Number	Description	Qty	Serial Number
35		01023-60412	Screw	2	91202-

FIG. K0210-024037 ROPS Cab (Floor Wiring Harness) (1/2)

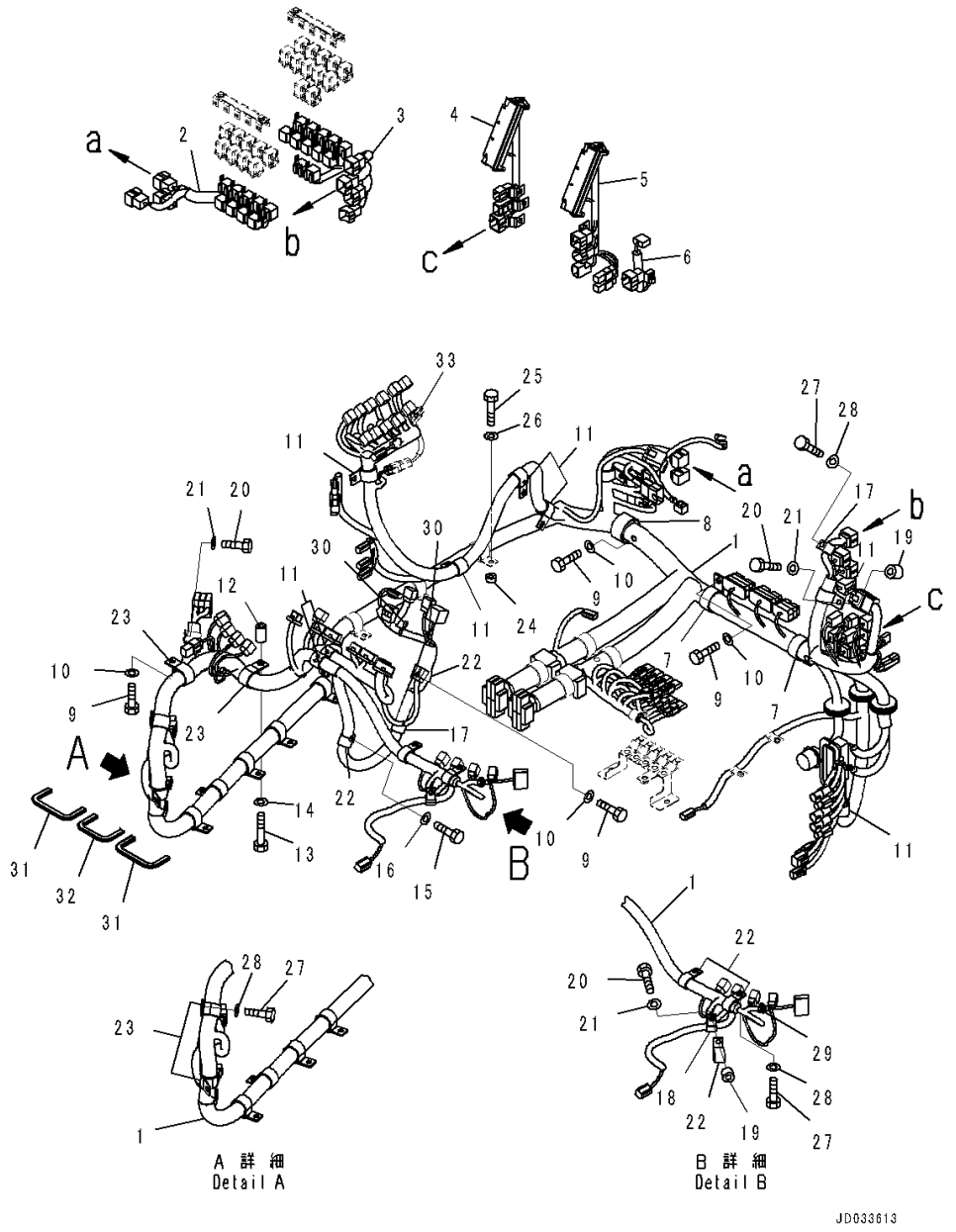

Index	Code	Part Number	Description	Qty	Serial Number
		Note: This list covers following specifications.			
		L.H. Door Sash Window			
		L.H. Door Sash Window, With Auto Air Conditioner			
		Both Sash Window			
		Both Sash Window, For EU Safety Regulation			
		Both Sash Window, With Auto Air Conditioner			
1		421-06-45111	Wiring Harness	1	91202-
2		423-06-45120	Wiring Harness	1	91202-
3		423-06-45133	Wiring Harness	1	91202-
4		423-06-45141	Box, Fuse	1	91202-
		08044-00010	• Terminal	15	91202-
5		423-06-45151	Box, Fuse	1	91202-
		08044-00010	• Terminal	20	91202-
6		423-06-45161	Wiring Harness	1	91202-
7		419-09-11150	Clip	2	91202-
8		234-885-3660	Clip	1	91202-
9		01010-81020	Bolt	12	91202-
10		01643-31032	Washer	12	91202-
11		04434-52711	Clip	10	91202-
12		22D-62-18450	Collar	1	91202-
13		01010-81055	Bolt	1	91202-
14		01643-31032	Washer	1	91202-
15		01010-81025	Bolt	2	91202-
16		01643-31032	Washer	2	91202-
17		04434-51410	Clip	2	91202-
18		04434-51510	Clip	1	91202-
19		175-79-83760	Spacer	2	91202-
20		01010-81040	Bolt	4	91202-
21		01643-31032	Washer	4	91202-
22		04434-52310	Clip	6	91202-
23		04434-53411	Clip	4	91202-
24		560-43-15220	Washer	9	91202-
25		01010-81035	Bolt	9	91202-
26		01643-31032	Washer	9	91202-
27		01010-81016	Bolt	4	91202-
28		01643-31032	Washer	4	91202-
29		08059-00310	Clip	1	91202-
30		08034-40521	Band	2	91202-
31		423-54-42380	Finisher	2	91202-
32		423-54-42990	Finisher	1	91202-

FIG. K0210-024037 ROPS Cab (Floor Wiring Harness) (1/2)

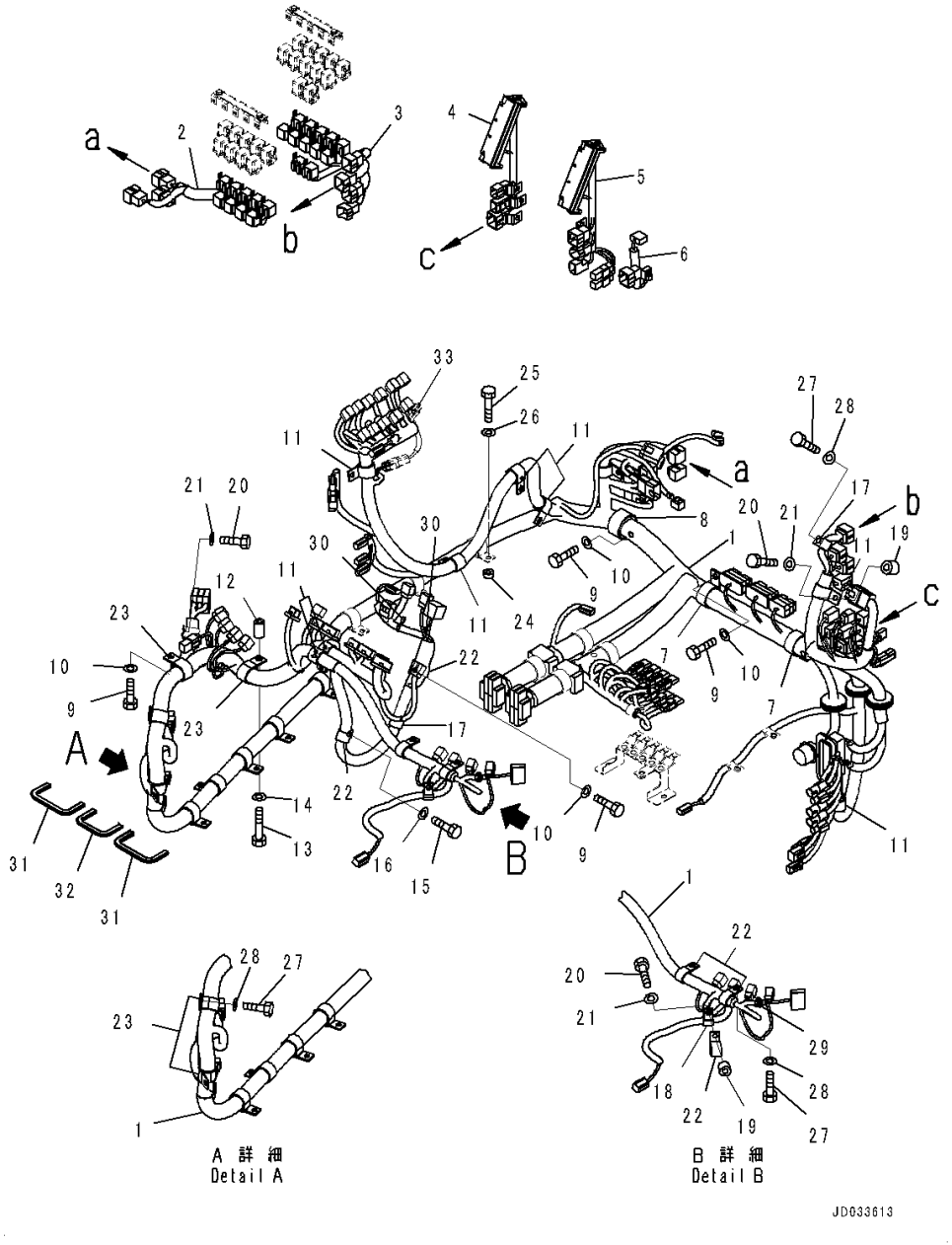

Index	Code	Part Number	Description	Qty	Serial Number
33		(423-06-45170)	Wiring Harness(Refer to Page 629)		-

FIG. K0210-024038 ROPS Cab (Floor Wiring Harness) (2/2)

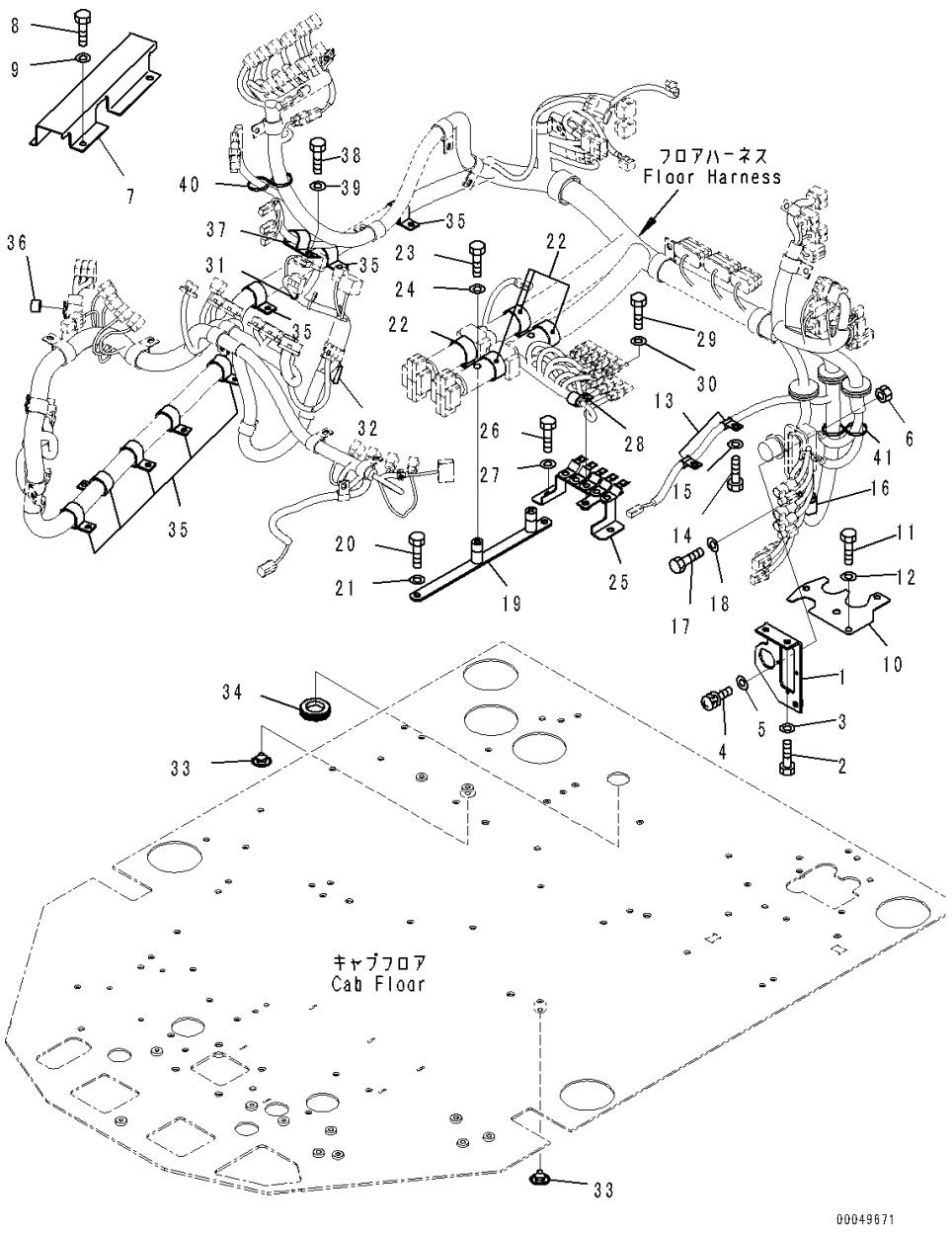

Index	Code	Part Number	Description	Qty	Serial Number
		Note: This list covers following specifications.			
		L.H. Door Sash Window			
		L.H. Door Sash Window, With Auto Air Conditioner			
		Both Sash Window			
		Both Sash Window, For EU Safety Regulation			
		Both Sash Window, With Auto Air Conditioner			
1		423-06-42662	Bracket	1	91202-
2		01010-81020	Bolt	2	91202-
3		01643-31032	Washer	2	91202-
4		01023-60420	Screw	4	91202-
5		01640-20408	Washer	4	91202-
6		01580-60403	Nut	4	91202-
7		423-54-42960	Plate	1	91202-
8		01010-81020	Bolt	2	91202-
9		01643-31032	Washer	2	91202-
10		423-06-42671	Plate	1	91202-
11		01010-81025	Bolt	3	91202-
12		01643-31032	Washer	3	91202-
13		04434-51010	Clip	2	91202-
14		01010-81016	Bolt	2	91202-
15		01643-31032	Washer	2	91202-
16		04434-52711	Clip	1	91202-
17		01010-81025	Bolt	1	91202-
18		01643-31032	Washer	1	91202-
19		423-06-42691	Bracket	1	91202-
20		01010-81025	Bolt	2	91202-
21		01643-31032	Washer	2	91202-
22		419-09-11150	Clip	4	91202-
23		01010-81025	Bolt	2	91202-
24		01643-31032	Washer	2	91202-
25		423-06-42681	Bracket	1	91202-
26		01010-81030	Bolt	2	91202-
27		01643-31032	Washer	2	91202-
28		04434-51710	Clip	1	91202-
29		01010-81020	Bolt	1	91202-
30		01643-31032	Washer	1	91202-
31		134-03-61410	Band	1	91202-
32		423-06-42730	Sheet	1	91202-
33		426-56-21990	Plug	2	91202-
34		09415-03614	Cap	1	91202-

FIG. K0210-024038 ROPS Cab (Floor Wiring Harness) (2/2)

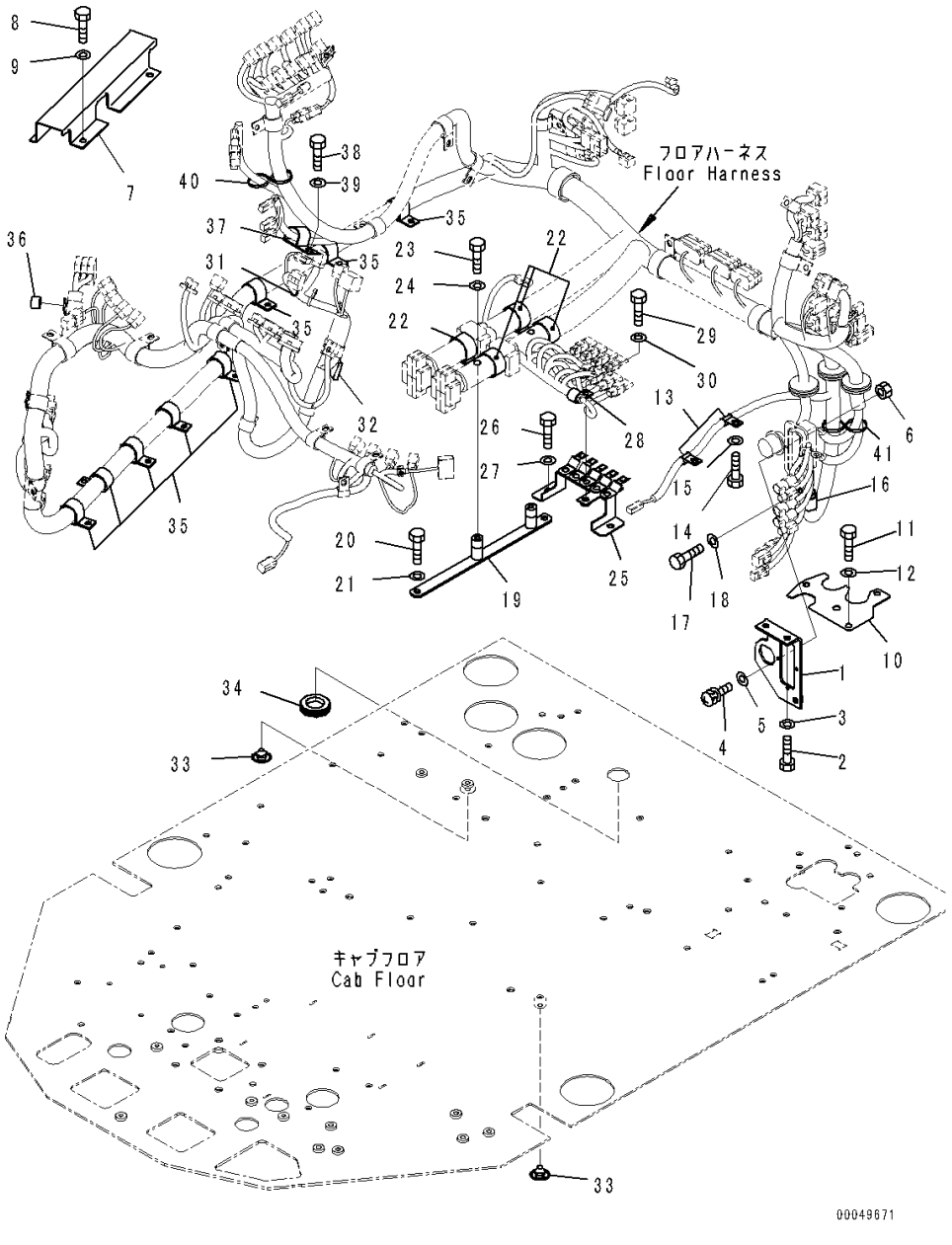

Index	Code	Part Number	Description	Qty	Serial Number
35		281-01-13180	Clip	9	91202-
36		201-03-29160	Spacer	1	91202-
37		04434-51010	Clip	1	91202-
38		01010-81020	Bolt	1	91202-
39		01643-31032	Washer	1	91202-
40		134-03-61410	Band	1	91202-
41		134-03-61410	Band	1	91202-

FIG. K0210-024039 ROPS Cab (Brake Valve)

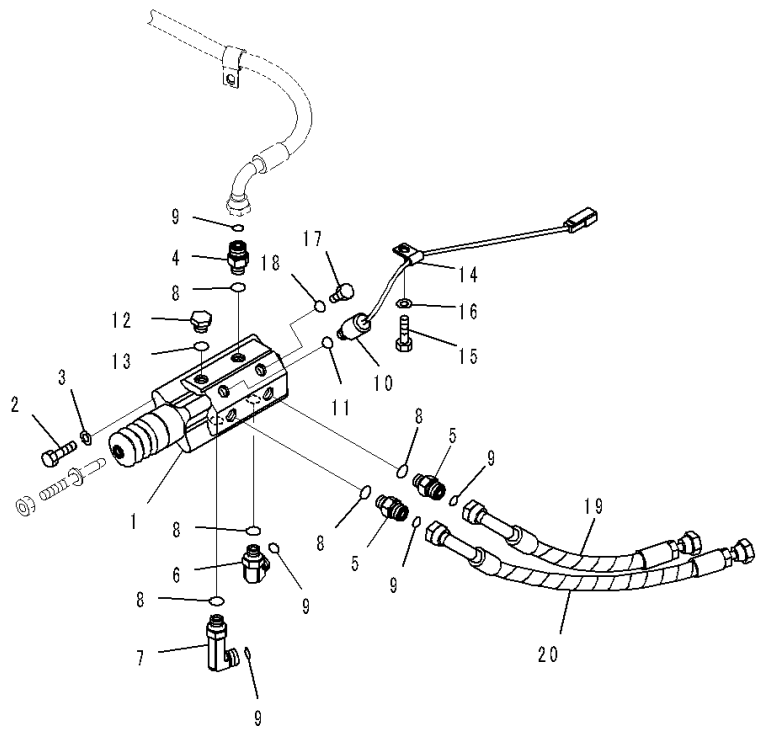

Index	Code	Part Number	Description	Qty	Serial Number
		Note: This list covers following specifications.			
		L.H. Door Sash Window			
		L.H. Door Sash Window, With Auto Air Conditioner			
		Both Sash Window			
		Both Sash Window, For EU Safety Regulation			
		Both Sash Window, With Auto Air Conditioner			
1		421-43-47102	Valve Assembly	1	91202-
2		01010-80825	Bolt	4	91202-
3		01643-30823	Washer	4	91202-
4		423-43-37270	Union	1	91202-
5		423-43-37270	Union	2	91202-
6		423-43-37260	Elbow	1	91202-
7		423-43-47250	Elbow	1	91202-
8		07002-11623	O-ring	5	91202-
9		02896-11012	O-ring	5	91202-
10		418-43-37230	Switch, Stop Lamp	1	91202-
11		07002-11423	O-ring	1	91202-
12		07040-11612	Plug	1	91202-
13		07002-11623	O-ring	1	91202-
14		04434-50510	Clip	1	91202-
15		01010-81016	Bolt	1	91202-
16		01643-31032	Washer	1	91202-
17		07040-11409	Plug	1	91202-
18		07002-11423	O-ring	1	91202-
19		421-43-47370	Hose	1	91202-
20		02754-004A4	Hose, Face Seal Type	1	91202-

FIG. K0210-024040 ROPS Cab (Main Monitor)

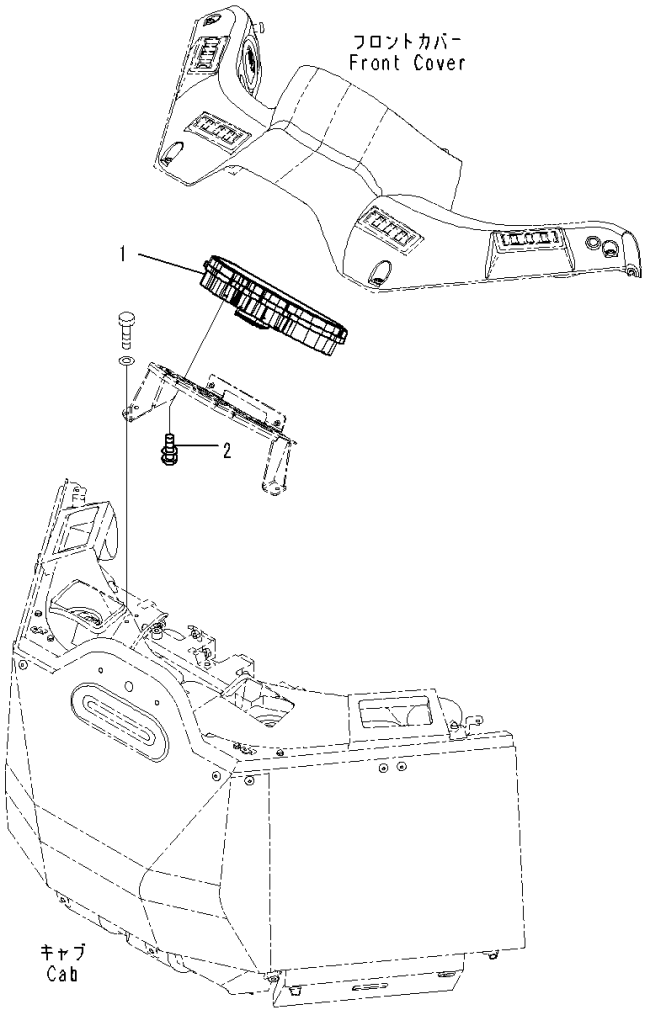

Index	Code	Part Number	Description	Qty	Serial Number
		Note: This list covers following specifications.			
		L.H. Door Sash Window			
		L.H. Door Sash Window, With Auto Air Conditioner			
		Both Sash Window			
		Both Sash Window, For EU Safety Regulation			
		Both Sash Window, With Auto Air Conditioner			
1		7823-30-9214	Monitor	1	91202-
2		01023-20612	Screw	8	91202-

FIG. K0210-024041 ROPS Cab (Washer Hose)

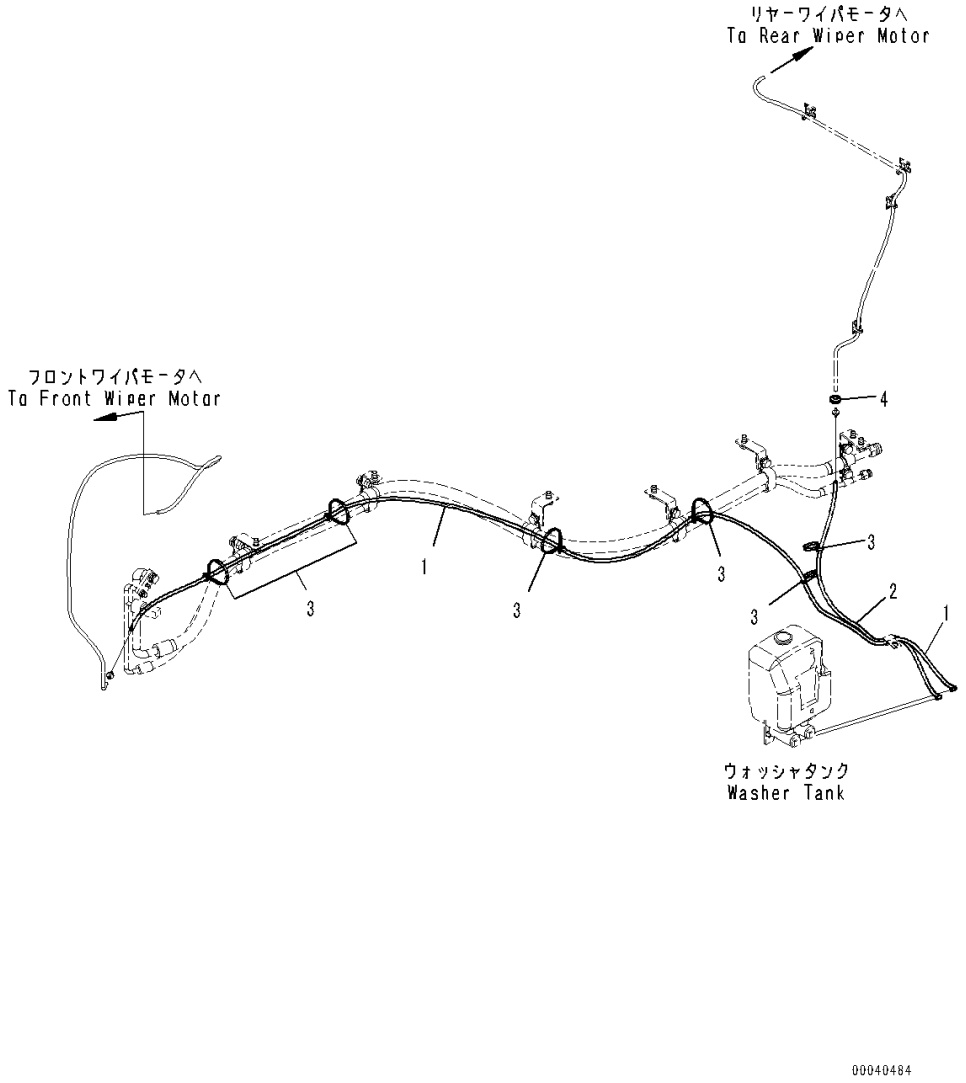

Index	Code	Part Number	Description	Qty	Serial Number
		Note: This list covers following specifications.			
		L.H. Door Sash Window			
		L.H. Door Sash Window, With Auto Air Conditioner			
		Both Sash Window			
		Both Sash Window, For EU Safety Regulation			
		Both Sash Window, With Auto Air Conditioner			
1		423-07-46110	Hose	1	91202-
2		423-07-46120	Hose	1	91202-
3		134-03-61410	Band	6	91202-
4		08037-01008	Grommet	1	91202-

FIG. K0210-024042 ROPS Cab (Air Conditioner Piping)

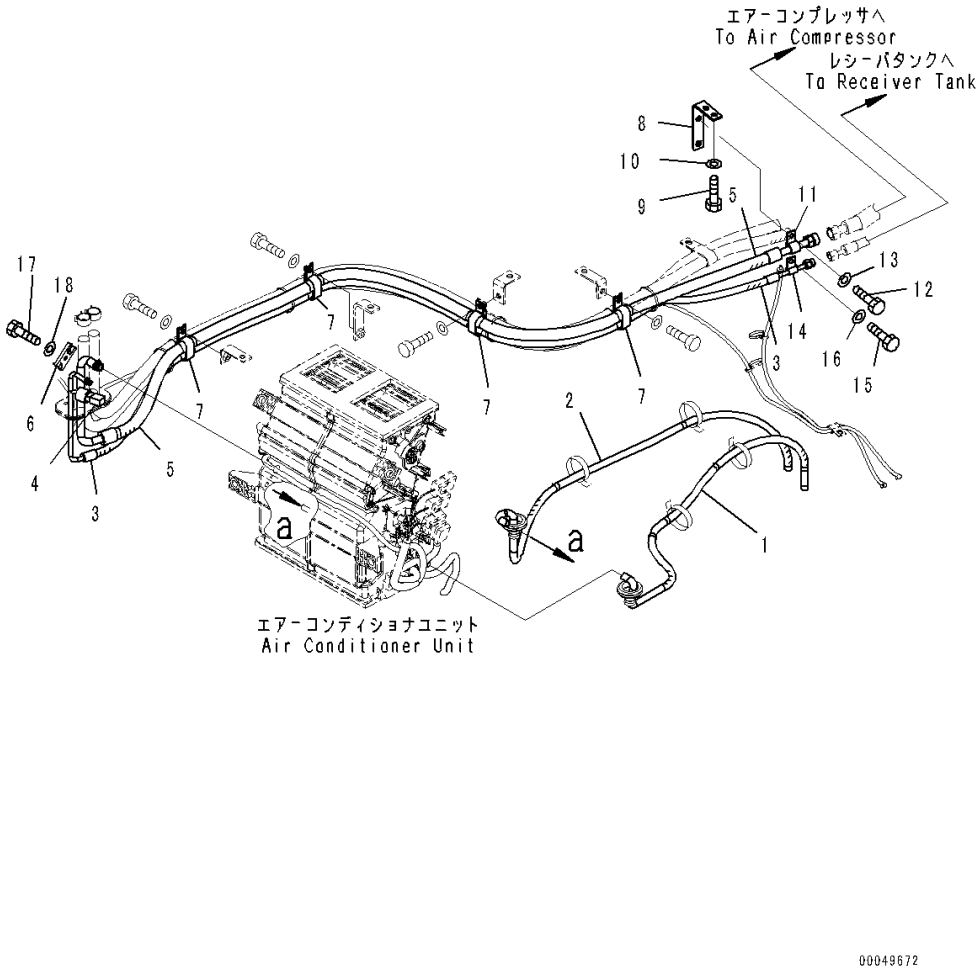

Index	Code	Part Number	Description	Qty	Serial Number
		Note: This list covers following specifications.			
		L.H. Door Sash Window			
		L.H. Door Sash Window, With Auto Air Conditioner			
		Both Sash Window			
		Both Sash Window, For EU Safety Regulation			
		Both Sash Window, With Auto Air Conditioner			
1		423-07-31340	Hose, L.H.	1	91202-
2		423-07-31350	Hose, R.H.	1	91202-
3		423-S62-4161	Hose	1	91202-
		AN51439-D0031	• O-ring	2	92102-
4		423-S62-3510	• Switch, Pressure	1	91202-
5		423-S62-4171	Hose	1	91202-
		AN51439-D0051	• O-ring	2	92102-
6		423-S62-3370	Plate	1	91202-
7		04435-52210	Clip	4	91202-
8		421-S62-4250	Bracket	1	91202-
9		01010-81020	Bolt	2	91202-
10		01643-31032	Washer	2	91202-
11		04434-51610	Clip	1	91202-
12		01010-81020	Bolt	1	91202-
13		01643-31032	Washer	1	91202-
14		04434-50810	Clip	1	91202-
15		01010-81020	Bolt	1	91202-
16		01643-31032	Washer	1	91202-
17		01010-80620	Bolt	1	91202-
18		01643-30623	Washer	1	91202-

FIG. K0210-024043 ROPS Cab (Heater Piping)

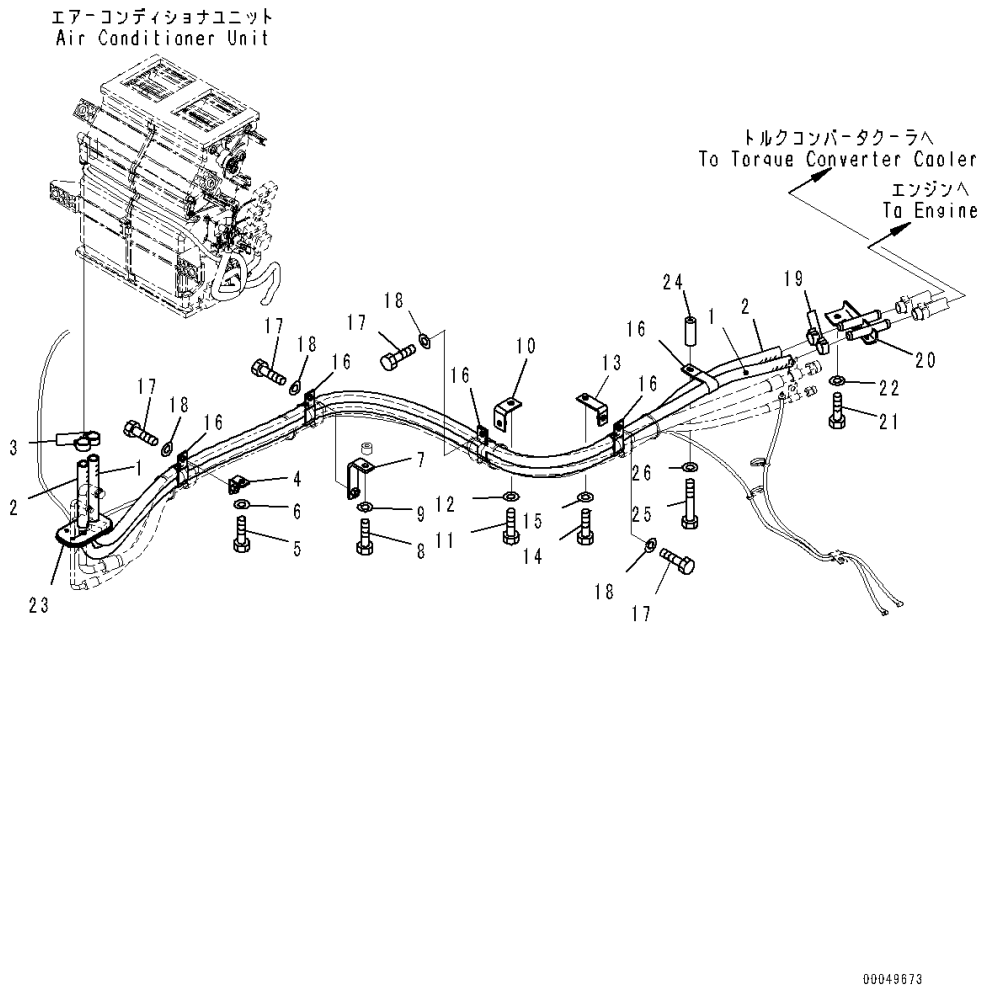

Index	Code	Part Number	Description	Qty	Serial Number
		Note: This list covers following specifications.			
		L.H. Door Sash Window			
		L.H. Door Sash Window, With Auto Air Conditioner			
		Both Sash Window			
		Both Sash Window, For EU Safety Regulation			
		Both Sash Window, With Auto Air Conditioner			
1		423-S62-4141	Hose	1	91202-
2		423-S62-4151	Hose	1	91202-
3		09479-02400	Clip	2	91202-
4		423-S62-4310	Plate	1	91202-
5		01010-81020	Bolt	1	91202-
6		01643-31032	Washer	1	91202-
7		42A-16-11210	Plate	1	91202-
8		01010-81020	Bolt	1	91202-
9		01643-31032	Washer	1	91202-
10		426-Z91-2170	Plate	1	91202-
11		01010-81020	Bolt	1	91202-
12		01643-31032	Washer	1	91202-
13		423-S62-4310	Plate	1	91202-
14		01010-81020	Bolt	1	91202-
15		01643-31032	Washer	1	91202-
16		421-07-11550	Clip	5	91202-
17		01010-81025	Bolt	5	91202-
18		01643-31032	Washer	5	91202-
19		09479-02400	Clip	2	91202-
20		421-07-41240	Bracket	1	91202-
21		01010-81025	Bolt	2	91202-
22		01643-31032	Washer	2	91202-
23		423-07-41721	Grommet	1	91202-
24		195-979-5190	Collar	1	91202-
25		01010-81070	Bolt	1	91202-
26		01643-31032	Washer	1	91202-

FIG. K0210-024044 ROPS Cab (Mounting) (2/2)

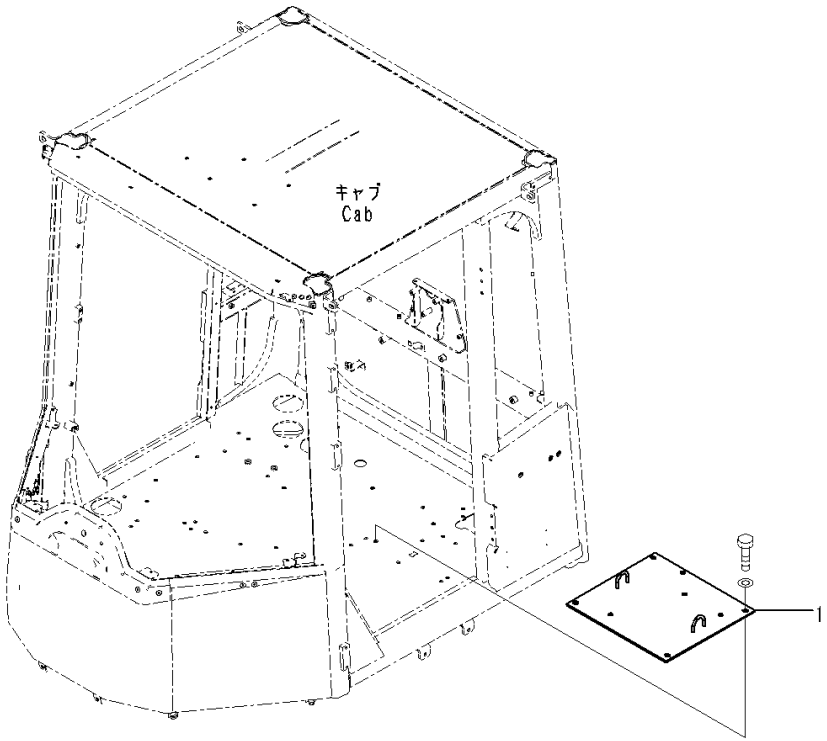

Index	Code	Part Number	Description	Qty	Serial Number
		Note: This list covers following specifications.			
		L.H. Door Sash Window			
		L.H. Door Sash Window, With Auto Air Conditioner			
		Both Sash Window			
		Both Sash Window, For EU Safety Regulation			
		Both Sash Window, With Auto Air Conditioner			
1		421-54-43570	Plate	1	91202-

FIG. K0210-024045 ROPS Cab (Rearview Mirror)

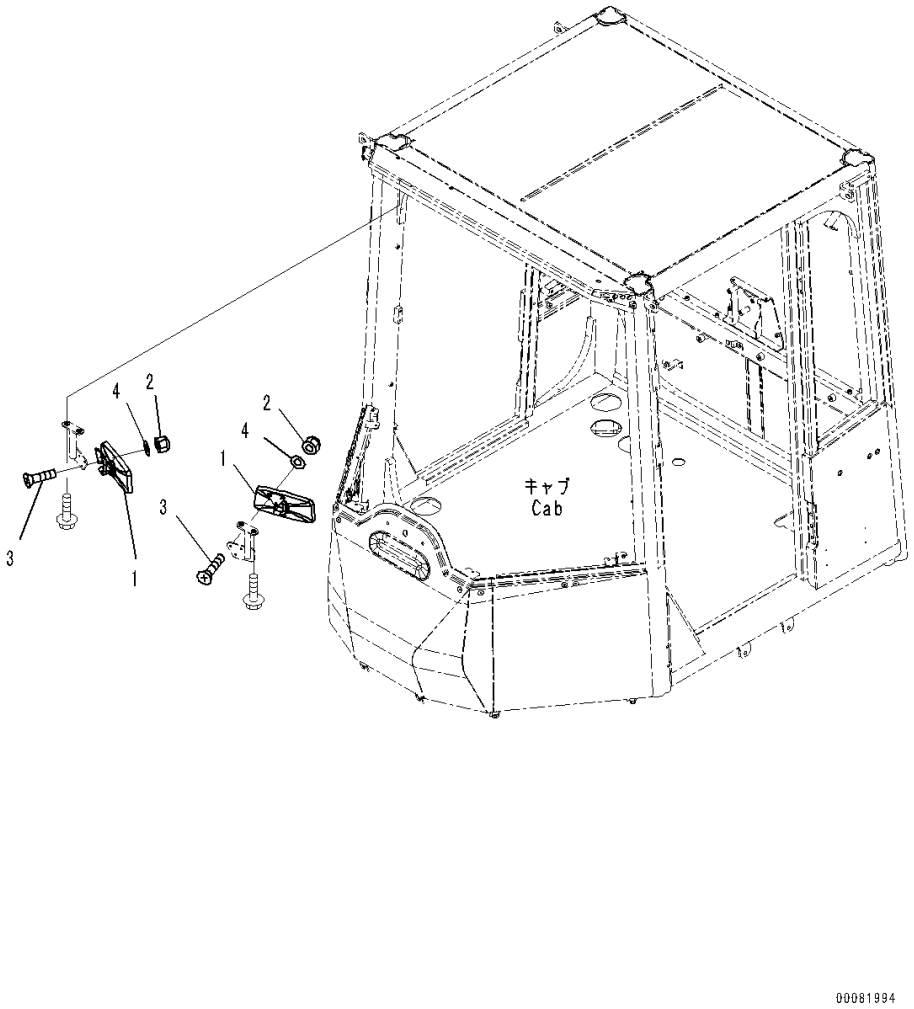

Index	Code	Part Number	Description	Qty	Serial Number
		Note: This list covers following specifications.			
		L.H. Door Sash Window			
		L.H. Door Sash Window, With Auto Air Conditioner			
		Both Sash Window			
		Both Sash Window, For EU Safety Regulation			
		Both Sash Window, With Auto Air Conditioner			
1		426-926-4990	Mirror	2	91202-
2		426-926-4980	Nut	6	91202-
3		01225-70516	Screw, Philips Head	6	91202-
4		01641-50508	Washer	6	91202-

FIG. K0210-026016 ROPS Cab (Cap)

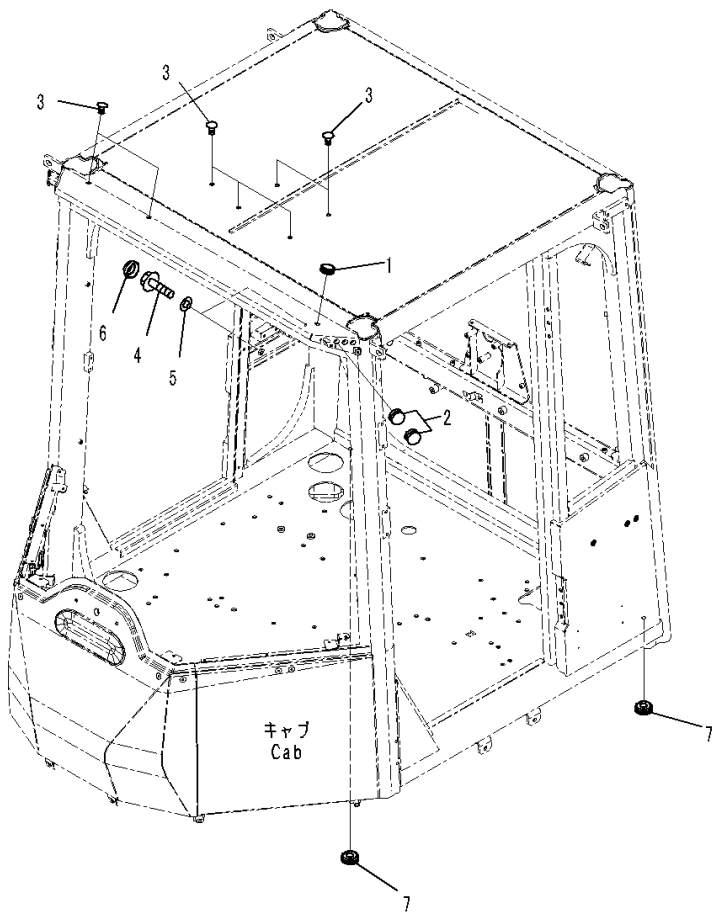

Index	Code	Part Number	Description	Qty	Serial Number
		Note: This list covers following specifications.			
		L.H. Door Sash Window, With Auto Air Conditioner			
		Both Sash Window			
		Both Sash Window, For EU Safety Regulation			
		Both Sash Window, With Auto Air Conditioner			
1		09415-01008	Cap	1	91202-
2		09415-01008	Cap	2	91202-
3		421-09-21210	Button	7	91202-
4		01435-01025	Bolt	2	91202-
5		01643-51032	Washer	2	91202-
6		363-54-31450	Cap	2	91202-
7		09415-00706	Cap	2	91202-

FIG. K0210-026017 ROPS Cab (Air Conditioner Duct)

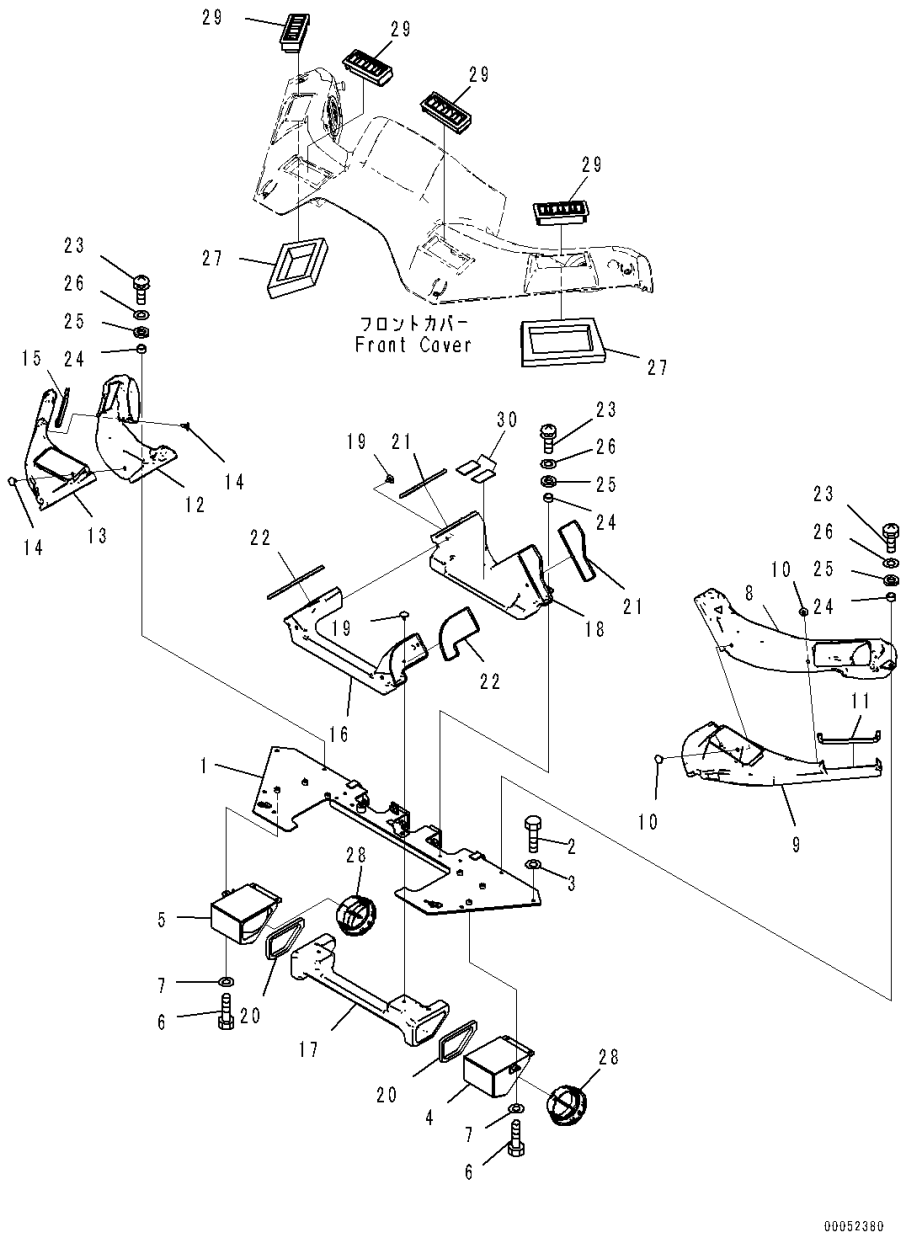

Index	Code	Part Number	Description	Qty	Serial Number
		Note: This list covers following specifications.			
		L.H. Door Sash Window, With Auto Air Conditioner			
		Both Sash Window, With Auto Air Conditioner			
1		423-925-4383	Bracket	1	91202-
2		01010-80616	Bolt	6	91202-
3		01643-30623	Washer	6	91202-
4		423-925-4433	Cover	1	91202-
5		423-925-4443	Cover	1	91202-
6		01010-80612	Bolt	6	91202-
7		01643-30623	Washer	6	91202-
		423-07-31743	Duct Assembly, L.H.	1	91202-
8		423-07-31912	• Duct	1	91202-
9		423-07-31921	• Duct	1	91202-
10		423-56-21910	• Button	2	91202-
11		423-07-31410	• Sheet	1	91202-
		423-07-31753	Duct Assembly, R.H.	1	91202-
12		423-07-31932	• Duct	1	91202-
13		423-07-31941	• Duct	1	91202-
14		423-56-21910	• Button	2	91202-
15		423-07-31410	• Sheet	1	91202-
		423-07-31763	Duct Assembly	1	91202-
16		423-07-31951	• Duct	1	91202-
17		423-07-31960	• Duct	1	91202-
18		423-07-31972	• Duct	1	91202-
19		423-56-21910	• Button	6	91202-
20		423-07-31790	• Sheet	2	91202-
21		423-07-31420	• Sheet	2	91202-
22		423-07-31430	• Sheet	2	91202-
23		01023-10620	Screw	6	91202-
24		426-56-31890	Collar	6	91202-
25		426-56-31870	Washer	6	91202-
26		01643-30623	Washer	6	91202-
27		423-07-31250	Sheet	2	91202-
28		20Y-53-12172	Grille	2	91202-
29		421-07-12512	Grille	4	91202-
30		423-07-31280	Plate	2	91202-

FIG. K0210-026018 ROPS Cab (Inner Parts, Air Conditioner Unit)

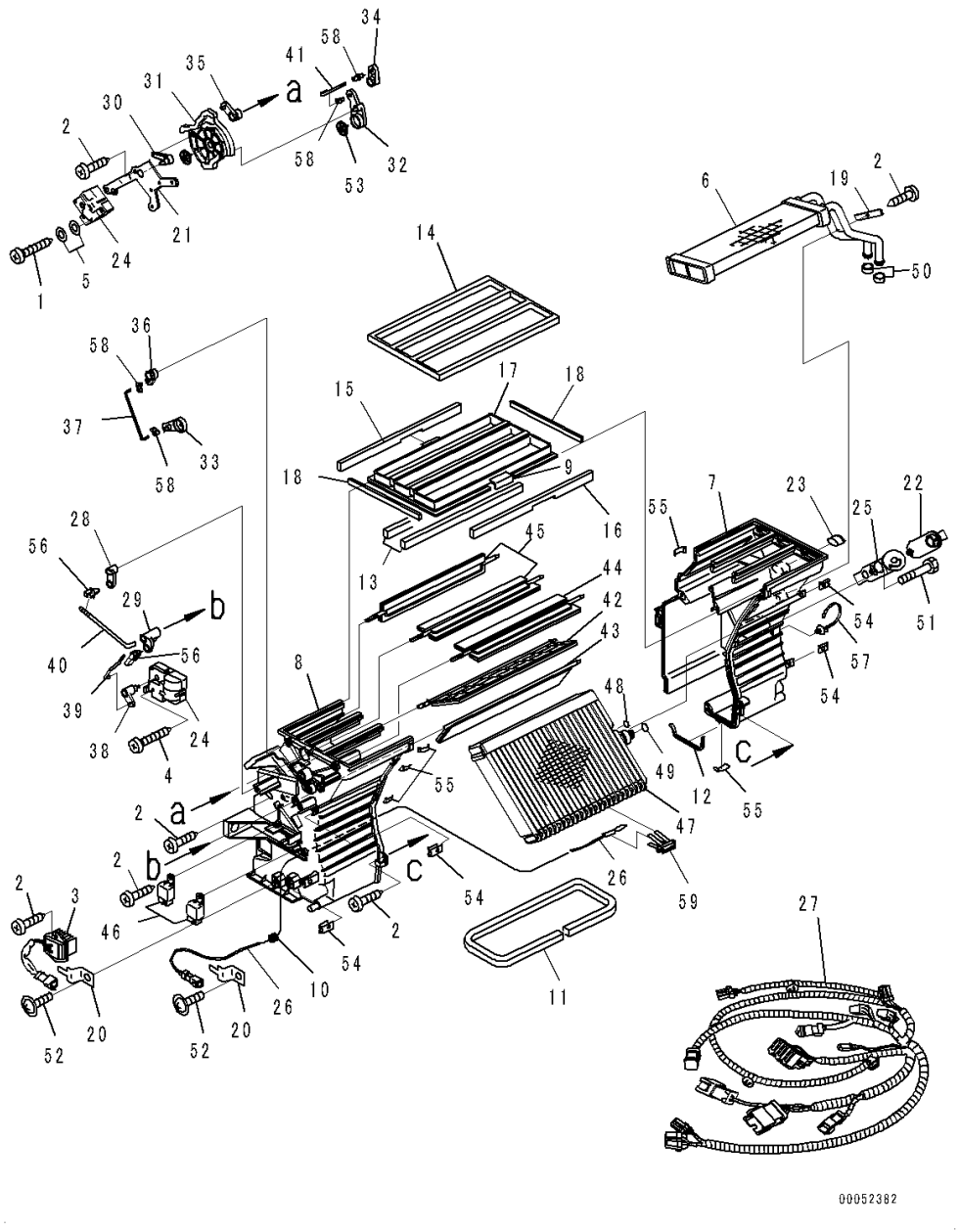

Index	Code	Part Number	Description	Qty	Serial Number
		Note: This list covers following specifications.			
		L.H. Door Sash Window, With Auto Air Conditioner			
		Both Sash Window, With Auto Air Conditioner			
		423-07-31811	Unit Assembly	1	91202-
1		ANKN-0425BA8	• Bolt	3	91202-
2		ANTB105160TI	• Screw	12	91202-
3		ANTKS-B210A0	• Controller	1	91202-
4		ANTN104300T1	• Screw	3	91202-
5		ANWPA04000G1	• Washer	2	91202-
6		AN51141-10430	• Heater Core Assembly	1	91202-
7		AN51150-12590	• Case Assembly	1	91202-
8		AN51150-12680	• Case Assembly	1	91202-
9		AN51159-41850	• Joint	1	91202-
10		AN51184-40820	• Grommet	1	91202-
11		AN51191-58720	• Packing	1	91202-
12		AN51191-59410	• Packing	1	91202-
13		AN51191-59601	• Packing	2	91202-
14		AN51191-59710	• Packing	1	91202-
15		AN51191-59720	• Packing	1	91202-
16		AN51191-59730	• Packing	1	91202-
17		AN51191-59740	• Packing	2	91202-
18		AN51191-59750	• Packing	2	91202-
19		AN51243-41500	• Pipe	1	91202-
20		AN51259-41750	• Bracket	2	91202-
21		AN51260-40670	• Bracket	1	91202-
22		AN51436-D0580	• Valve, Expansion	1	91202-
23		AN51436-10320	• Cap	1	91202-
24		AN51502-15130	• Actuator	2	91202-
25		AN51515-A0490	• Valve, Expansion	1	91202-
26		AN51532-41240	• Thermistor	1	91202-
27		AN51550-18860	• Wiring Harness	1	91202-
28		AN51571-43580	• Lever	1	91202-
29		AN51571-43590	• Lever	1	91202-
30		AN51571-43840	• Lever	1	91202-
31		AN51571-43850	• Link	1	91202-
32		AN51571-43860	• Lever	1	91202-
33		AN51571-43870	• Lever	1	91202-
34		AN51571-43880	• Lever	1	91202-
35		AN51571-43890	• Lever	1	91202-
36		AN51571-43900	• Lever	1	91202-

FIG. K0210-026018 ROPS Cab (Inner Parts, Air Conditioner Unit)

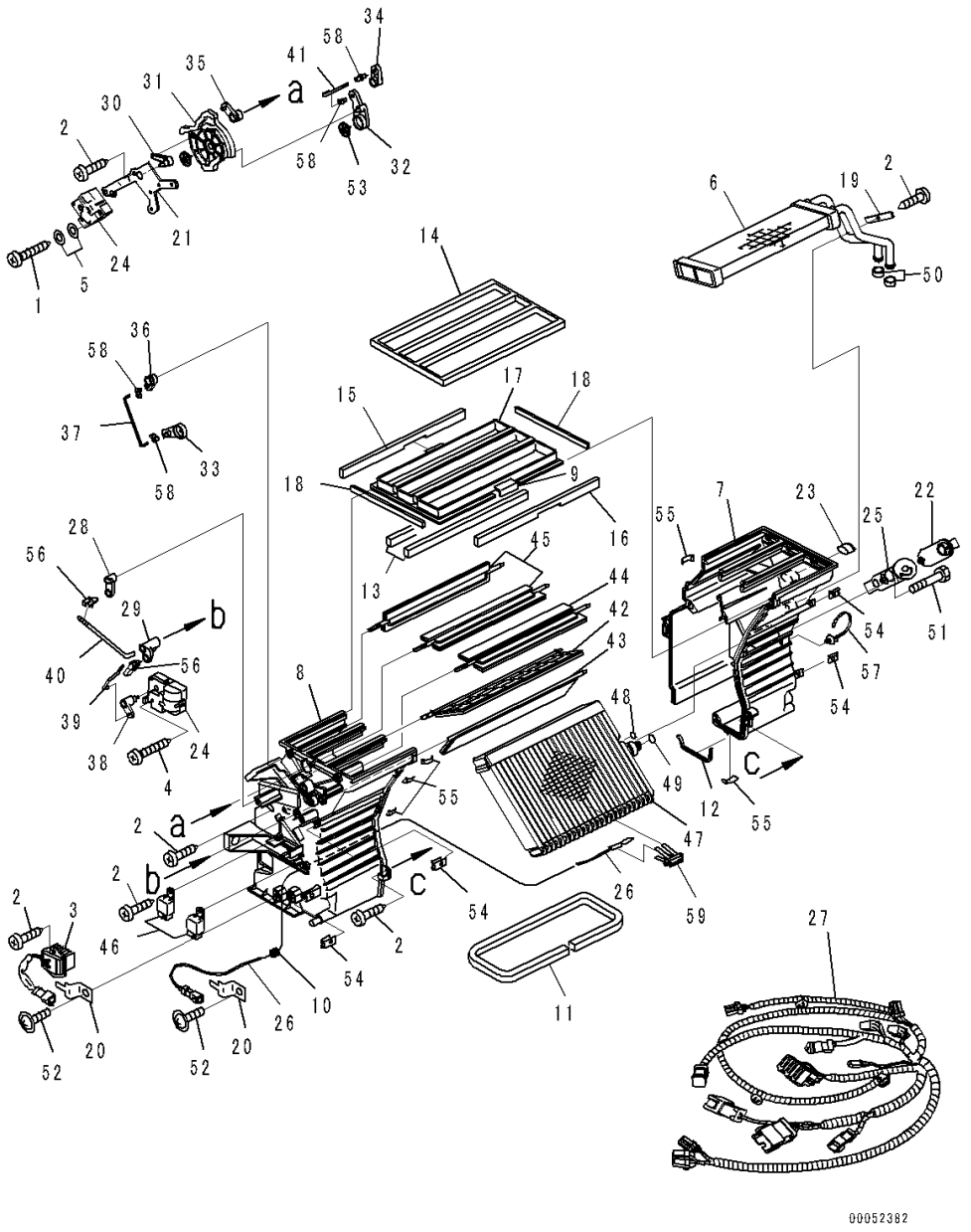

Index	Code	Part Number	Description	Qty	Serial Number
37		AN51571-43910	• Rod	1	91202-
38		AN51571-44120	• Lever	1	91202-
39		AN51571-44320	• Rod	1	91202-
40		AN51571-44330	• Rod	1	91202-
41		AN51571-44570	• Rod	1	91202-
42		AN51573-11552	• Damper	1	91202-
43		AN51573-11562	• Damper	1	91202-
44		AN51573-11660	• Damper	1	91202-
45		AN51573-11670	• Damper	2	91202-
46		AN51580-41010	• Relay	2	91202-
47		AN51700-A0380	• Evaporator Assembly	1	91202-
48		AN51439-D0041	• • O-ring	1	91202-
49		AN51439-D0051	• • O-ring	1	91202-
50		AN51719-40030	• Cap	2	91202-
51		AN51851-42250	• Bolt	2	91202-
52		AN51852-40770	• Screw	2	91202-
53		AN51852-40780	• Cap	3	91202-
54		AN51853-41521	• Nut	4	91202-
55		AN51870-40040	• Clamp	6	91202-
56		AN51870-40910	• Clamp	2	91202-
57		AN51871-80010	• Band	2	91202-
58		AN51872-40350	• Holder	4	91202-
59		AN51873-40250	• Holder	1	91202-

FIG. K0210-026019 ROPS Cab (Air Conditioner Unit Mounting)

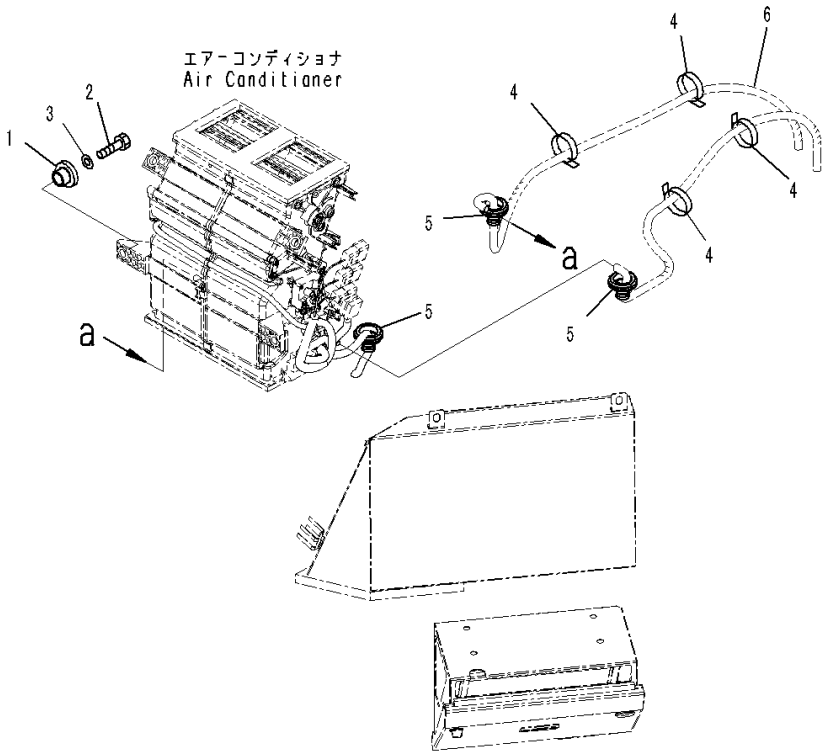

Index	Code	Part Number	Description	Qty	Serial Number
		Note: This list covers following specifications.			
		L.H. Door Sash Window, With Auto Air Conditioner			
		Both Sash Window, With Auto Air Conditioner			
1		208-979-7540	Collar	4	91202-
2		01010-80830	Bolt	4	91202-
3		01643-30823	Washer	4	91202-
4		08034-40521	Band	4	91202-
5		08037-12036	Grommet	3	91202-
6		(423-07-31350)	Hose(Refer to Page 585)		-

FIG. K0210-026020 ROPS Cab (Blower)

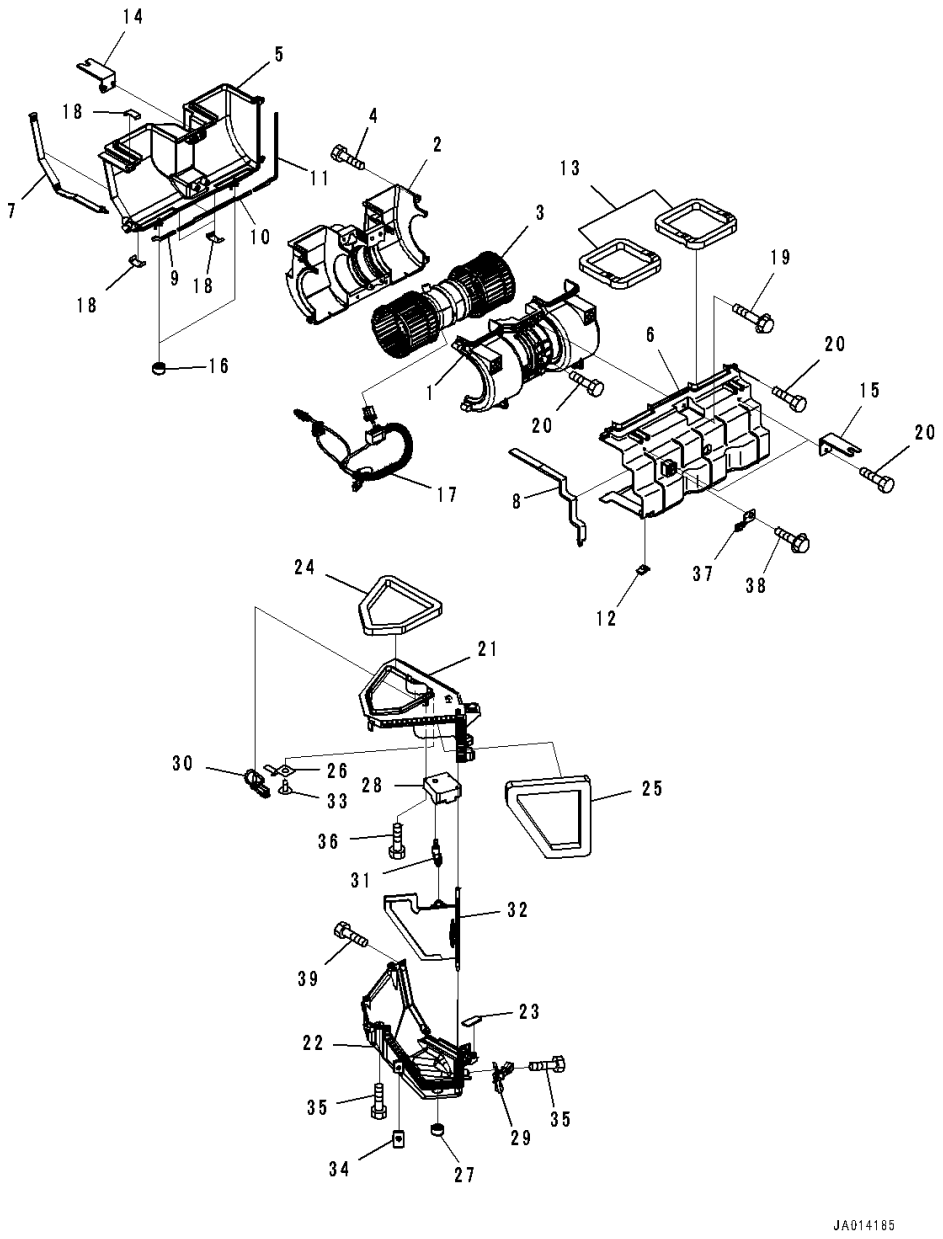

Index	Code	Part Number	Description	Qty	Serial Number
		Note: This list covers following specifications.			
		L.H. Door Sash Window, With Auto Air Conditioner			
		Both Sash Window, With Auto Air Conditioner			
		423-07-31802	Blower Assembly	1	91202-
		423-07-31481	• Blower Assembly	1	91202-
		AN51104-10860	• • Blower Assembly	1	91202-
1		AN51153-40680	• • • Case	1	91202-
2		AN51153-40511	• • • Case	1	91202-
3		AN51500-11150	• • • Motor Assembly	1	91202-
4		ANTB105160TA	• • • Bolt	8	91202-
5		AN51153-40491	• • Case	1	91202-
6		AN51153-40501	• • Case	1	91202-
7		AN51191-58750	• • Packing	1	91202-
8		AN51191-58760	• • Packing	1	91202-
9		AN51191-62020	• • Packing	1	91202-
10		AN51191-62030	• • Packing	1	91202-
11		AN51191-62040	• • Packing	1	91202-
12		AN51191-59460	• • Packing	1	91202-
13		AN51194-53610	• • Packing	2	91202-
14		AN51240-12310	• • Bracket	1	91202-
15		AN51240-43460	• • Bracket	2	91202-
16		AN51420-43340	• • Valve	2	91202-
17		AN51550-18870	• • Wiring Harness	1	91202-
18		AN51870-40040	• • Clamp	4	91202-
19		ANBF00640DPA	• • Bolt	2	91202-
20		ANTB105160TA	• • Bolt	11	91202-
		AN51170-12311	• Intake Box Assembly	1	91202-
21		AN51170-43791	• • Box	1	91202-
22		AN51170-43801	• • Box	1	91202-
23		AN51191-59460	• • Packing	1	91202-
24		AN51194-53570	• • Packing	1	91202-
25		AN51194-53580	• • Packing	1	91202-
26		AN51259-41780	• • Clip	1	91202-
27		AN51420-43340	• • Valve	1	91202-
28		AN51502-40220	• • Actuator	1	91202-
29		AN51532-10870	• • Sensor	1	91202-
30		AN51532-41250	• • Connector	1	91202-
31		AN51571-43611	• • Valve	1	91202-
32		AN51573-11570	• • Damper	1	91202-
33		AN51852-40770	• • Screw	1	91202-

FIG. K0210-026020 ROPS Cab (Blower)

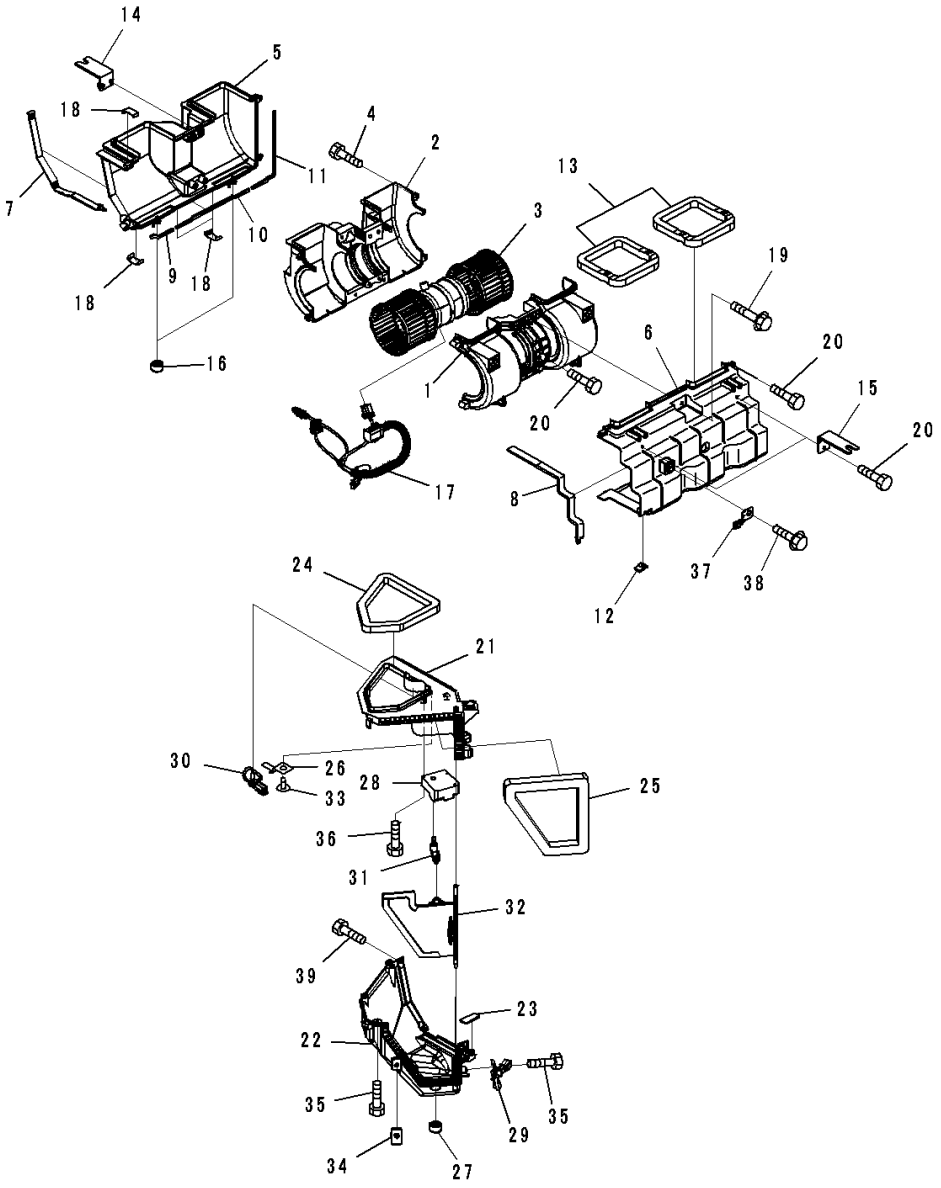

Index	Code	Part Number	Description	Qty	Serial Number
34		AN51853-41521	• • Nut	1	91202-
35		ANTB105160TA	• • Bolt	5	91202-
36		ANTN104300TA	• • Bolt	3	91202-
37		AN51259-41780	• Clip	1	91202-
38		AN51852-40770	• Screw	1	91202-
39		ANTB105160TA	• Bolt	3	91202-

FIG. K0210-026021 ROPS Cab (Blower Mounting and Control Panel)

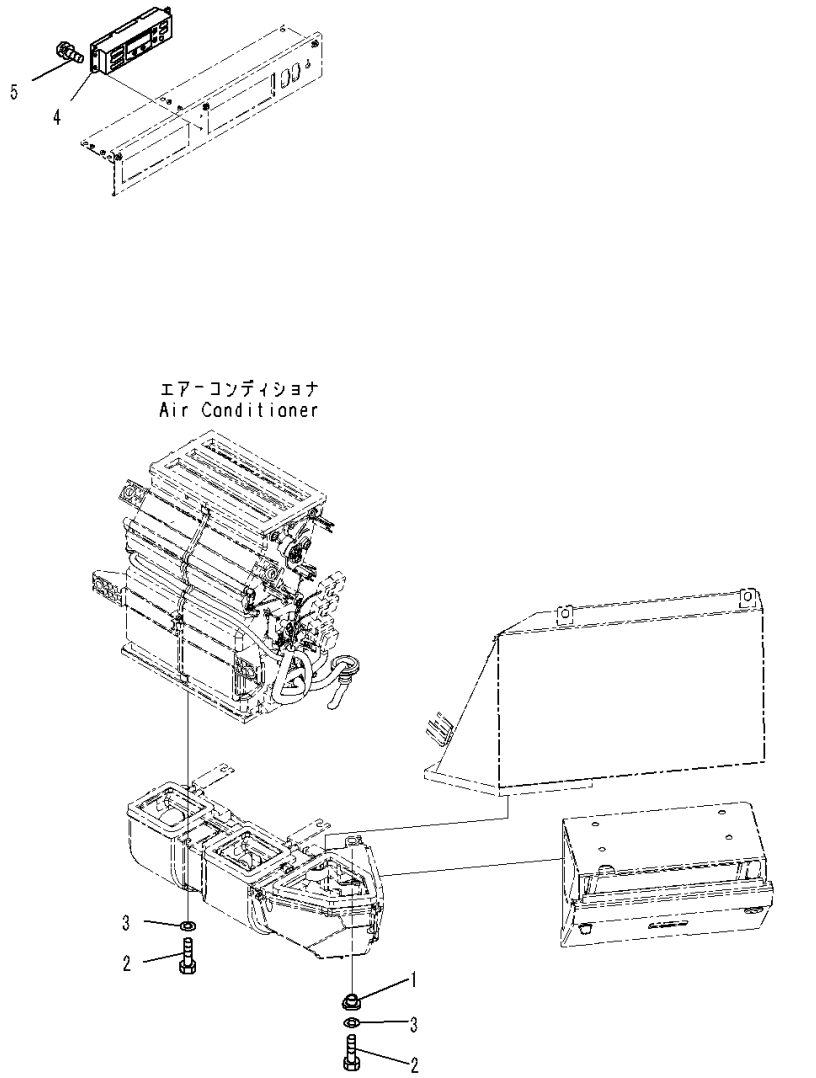

Index	Code	Part Number	Description	Qty	Serial Number
		Note: This list covers following specifications.			
		L.H. Door Sash Window, With Auto Air Conditioner			
		Both Sash Window, With Auto Air Conditioner			
1		208-979-7540	Collar	1	91202-
2		01010-80825	Bolt	4	91202-
3		01643-30823	Washer	4	91202-
4		423-07-31841	Control	1	91202-
5		01023-10514	Screw	4	91202-

FIG. K0210-026024 ROPS Cab (Sensor)

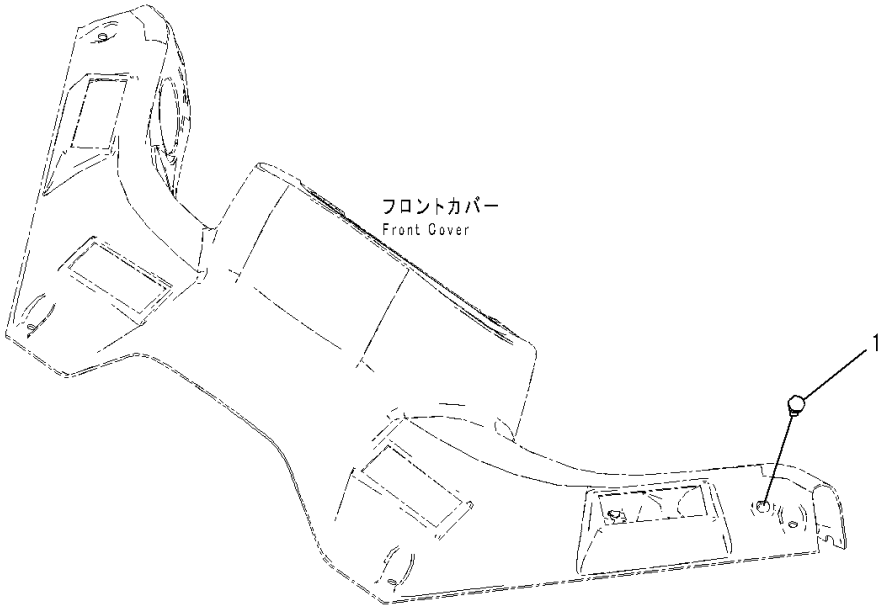

Index	Code	Part Number	Description	Qty	Serial Number
		Note: This list covers following specifications.			
		L.H. Door Sash Window, With Auto Air Conditioner			
		Both Sash Window, With Auto Air Conditioner			
1		423-07-31771	Sensor, Auto Air Conditioner	1	91202-

FIG. K0210-025005 ROPS Cab (Door, R.H.)

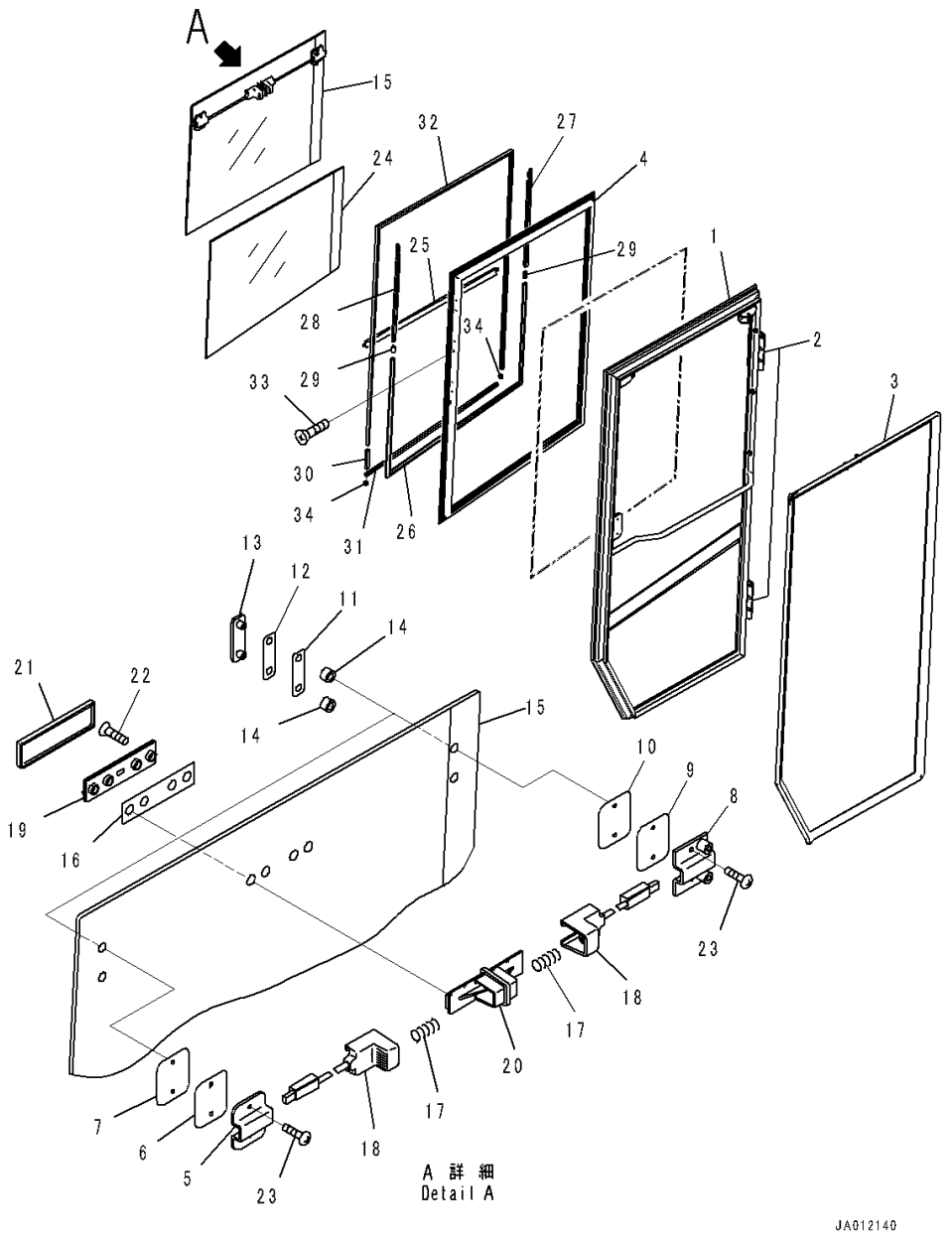

Index	Code	Part Number	Description	Qty	Serial Number
		Note: This list covers following specifications.			
		Both Sash Window			
		Both Sash Window, For EU Safety Regulation			
		Both Sash Window, With Auto Air Conditioner			
1		425-925-3160	Door Assembly	1	91202-
2		14X-911-1330	• Hinge, Welded	2	91202-
3		423-925-4341	Seal, R.H.	1	91202-
		423-925-4723	Sash Assembly	1	91202-
4		421-925-4620	• Frame	1	91202-
		421-925-4652	• Glass Assembly	1	91202-
5		421-925-4920	• • Holder Assembly	1	91202-
6		423-925-3780	• • • Packing	1	91202-
7		423-925-3790	• • • Packing	1	91202-
8		421-925-4930	• • Holder Assembly	1	91202-
9		423-925-3780	• • • Packing	1	91202-
10		423-925-3790	• • • Packing	1	91202-
11		421-925-5950	• • Packing	2	91202-
12		421-925-5960	• • Packing	2	91202-
13		423-925-3810	• • Retainer	2	91202-
14		421-925-4940	• • Tube	4	91202-
15		421-925-4681	• • Glass	1	91202-
		421-925-4860	• • Lock Assembly	1	91202-
16		423-925-3850	• • • Packing	1	91202-
17		423-925-3860	• • • Spring	2	91202-
18		421-925-4870	• • • Lever	2	91202-
19		423-925-3880	• • • Retainer	1	91202-
20		423-925-3940	• • • Base	1	91202-
21		423-925-3950	• • • Cover	1	91202-
22		423-925-3990	• • • Screw	4	91202-
23		421-925-5970	• • Screw	4	91202-
24		421-925-4721	• Glass	1	91202-
25		421-925-4750	• Run Channel	1	91202-
26		421-925-4770	• Rubber	1	91202-
27		421-925-4810	• Catcher	1	91202-
28		421-925-4820	• Catcher	1	91202-
29		421-925-4830	• Rubber	2	91202-
30		421-925-4840	• Rubber	1	91202-
31		421-925-4850	• Rubber	1	91202-
32		421-925-4890	• Run Channel	1	91202-
33		423-925-3960	• Screw	12	91202-

FIG. K0210-025005 ROPS Cab (Door, R.H.)

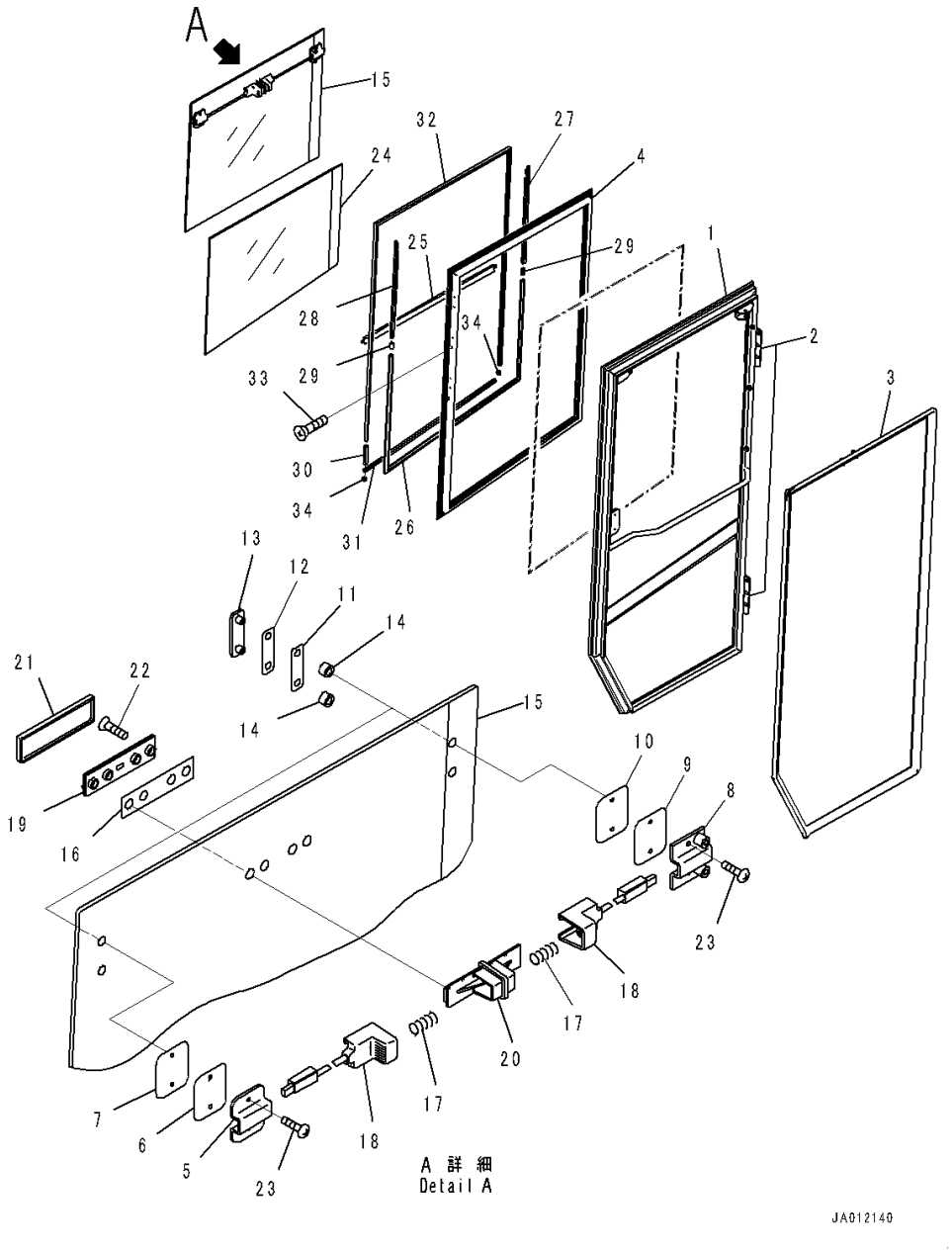

Index	Code	Part Number	Description	Qty	Serial Number
34		421-925-4910	• Seal	2	91202-

FIG. K0210-025006 ROPS Cab (Door Lock, R.H.)

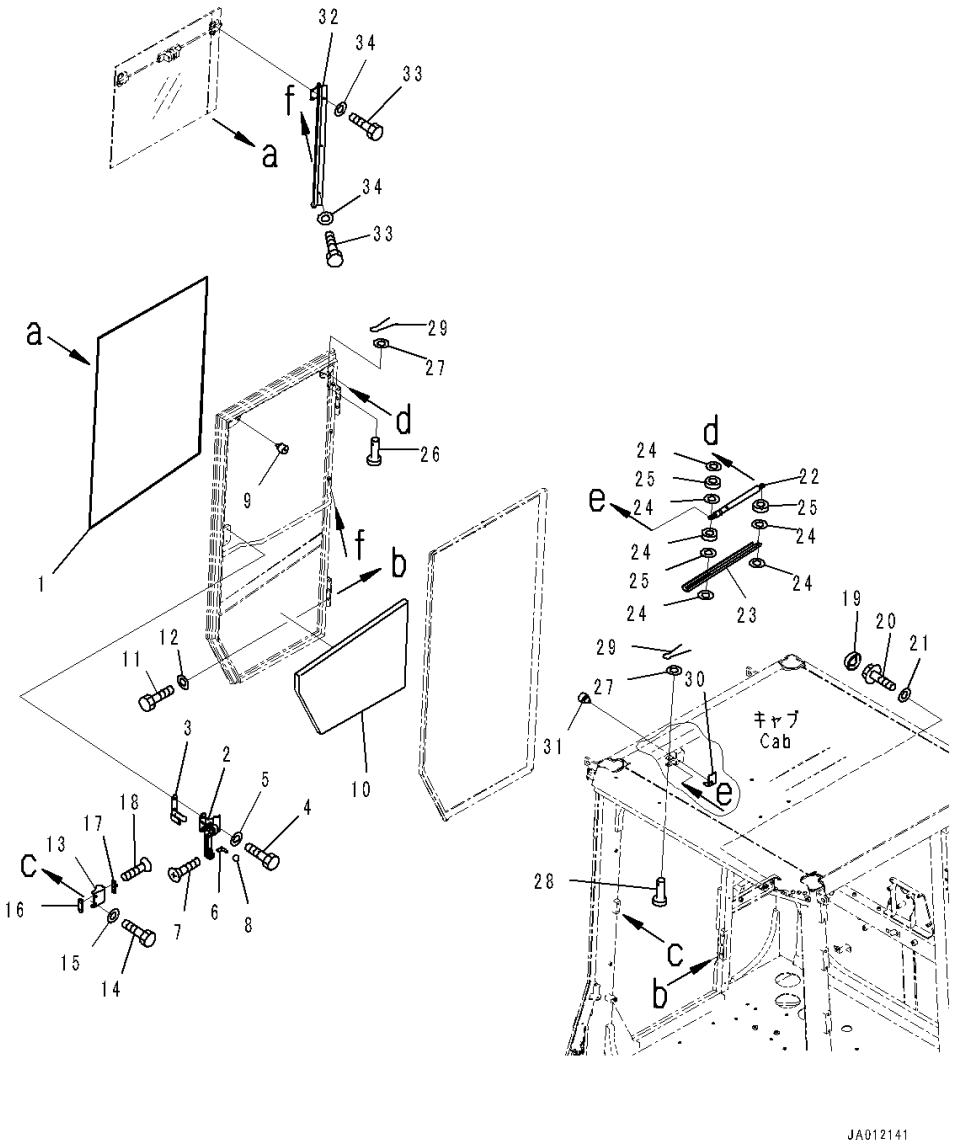

Index	Code	Part Number	Description	Qty	Serial Number
		Note: This list covers following specifications.			
		Both Sash Window			
		Both Sash Window, For EU Safety Regulation			
		Both Sash Window, With Auto Air Conditioner			
1		423-926-4640	Dam	1	91202-
2		423-925-4271	Lock Assembly	1	91202-
3		426-56-31650	Plate	1	91202-
4		01010-D0620	Bolt	2	91202-
5		01643-70623	Washer	2	91202-
6		423-925-4391	Bracket	1	91202-
7		01224-70412	Screw, Philips Head	1	91202-
8		22T-55-15290	Knob	1	91202-
9		417-923-3950	Stopper	1	91202-
10		423-925-4360	Sheet	1	91202-
11		01010-81025	Bolt	6	91202-
12		01643-31032	Washer	6	91202-
13		423-925-4334	Bracket	1	91202-
14		01010-D1020	Bolt	2	91202-
15		01643-71032	Washer	2	91202-
16		423-925-4241	Plate	1	91202-
17		423-925-4253	Striker	1	91202-
18		01240-00616	Screw	2	91202-
19		363-54-31450	Cap	2	91202-
20		01435-01025	Bolt	2	91202-
21		01643-31032	Washer	2	91202-
22		426-56-32180	Spring, Gas, Gas	1	91202-
23		425-926-3911	Plate	1	91202-
24		426-925-3981	Washer	6	91202-
25		426-925-3990	Spacer	3	91202-
26		04205-30835	Pin	1	91202-
27		01640-20816	Washer	2	91202-
28		154-61-16930	Pin	1	91202-
29		04050-12015	Pin, Cotter	2	91202-
30		425-926-3941	Sheet	1	91202-
31		56B-54-13340	Stopper	1	91202-
32		425-925-3170	Assist	1	91202-
33		01010-D0612	Bolt	5	91202-
34		01643-70623	Washer	5	91202-

FIG. K0210-025013 ROPS Cab (Mark and Plate)

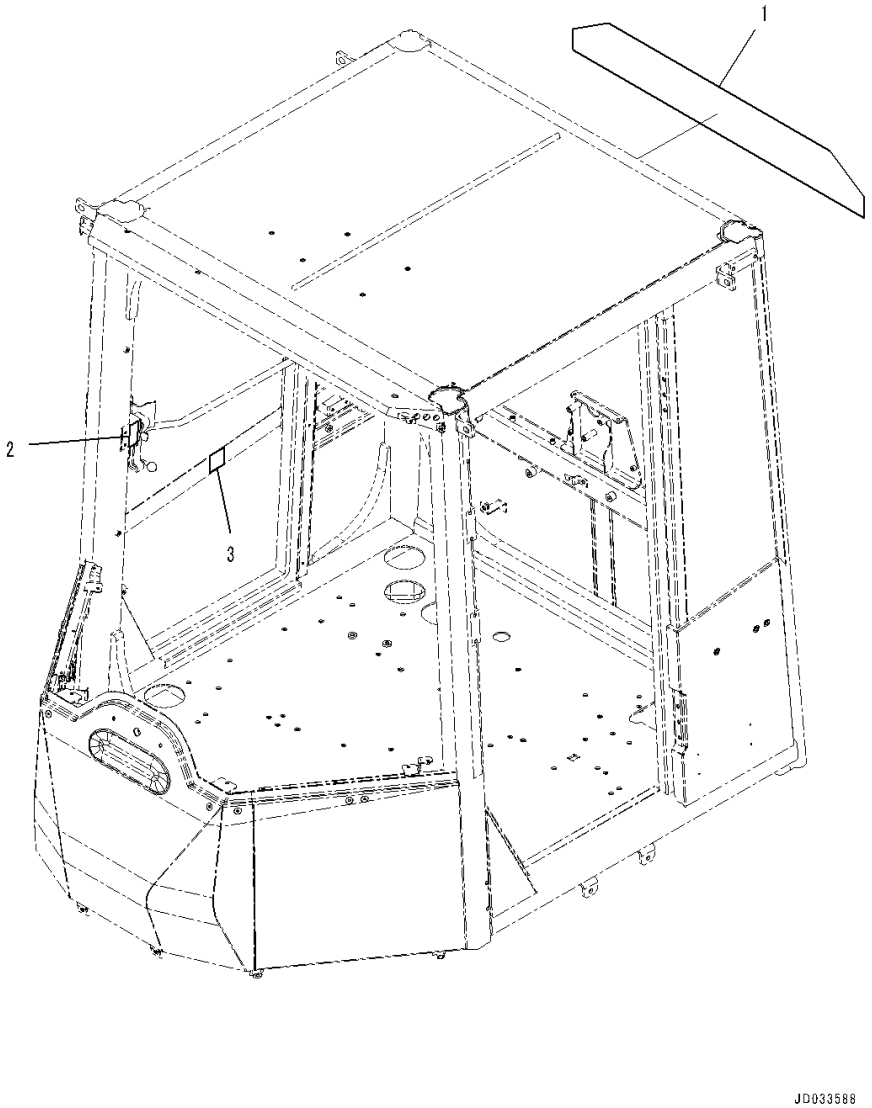

Index	Code	Part Number	Description	Qty	Serial Number
		Note: This list covers following specifications.			
		Both Sash Window			
		Both Sash Window, With Auto Air Conditioner			
1		417-926-3711	Plate, Komatsu Logo	1	91202-
2		425-93-51110	Decal, Emergency Exit	1	91202-
3		421-926-4990	Plate, Emergency Escape Door	1	91202-

FIG. K0310-001001 Floor Mat (Without Joystick Steering System)

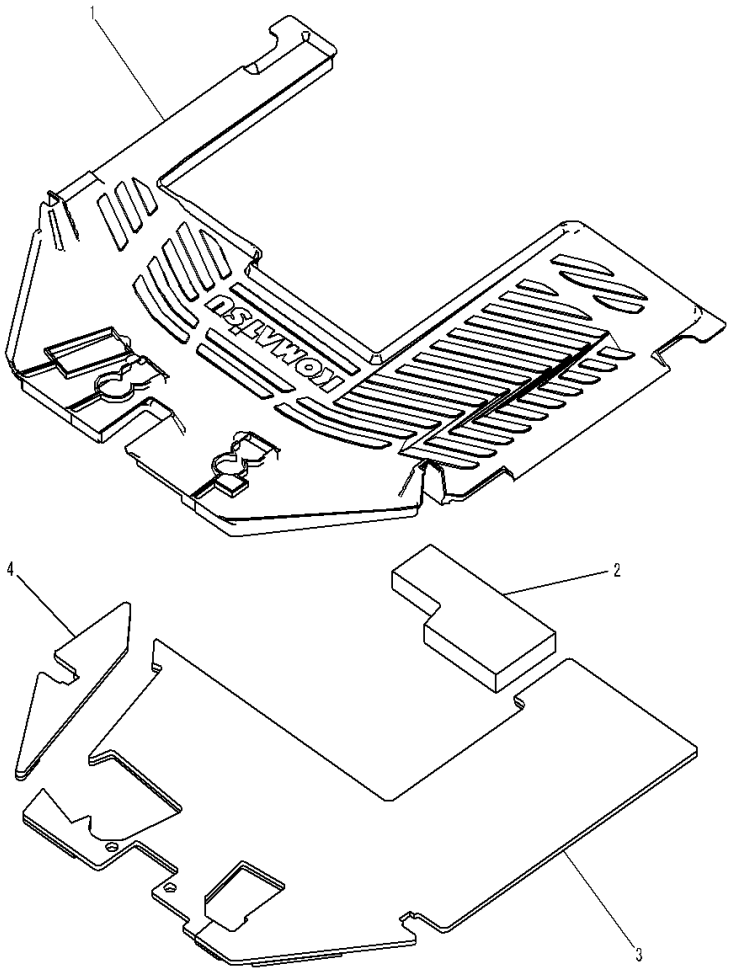

Index	Code	Part Number	Description	Qty	Serial Number
1		423-54-32631	Mat	1	90216-
2		423-54-42480	Sheet	1	90216-
3		423-54-32612	Sheet	1	90216-
4		423-54-32622	Sheet	1	90216-

FIG. K0310-002001 Floor Mat (With Joystick Steering System)

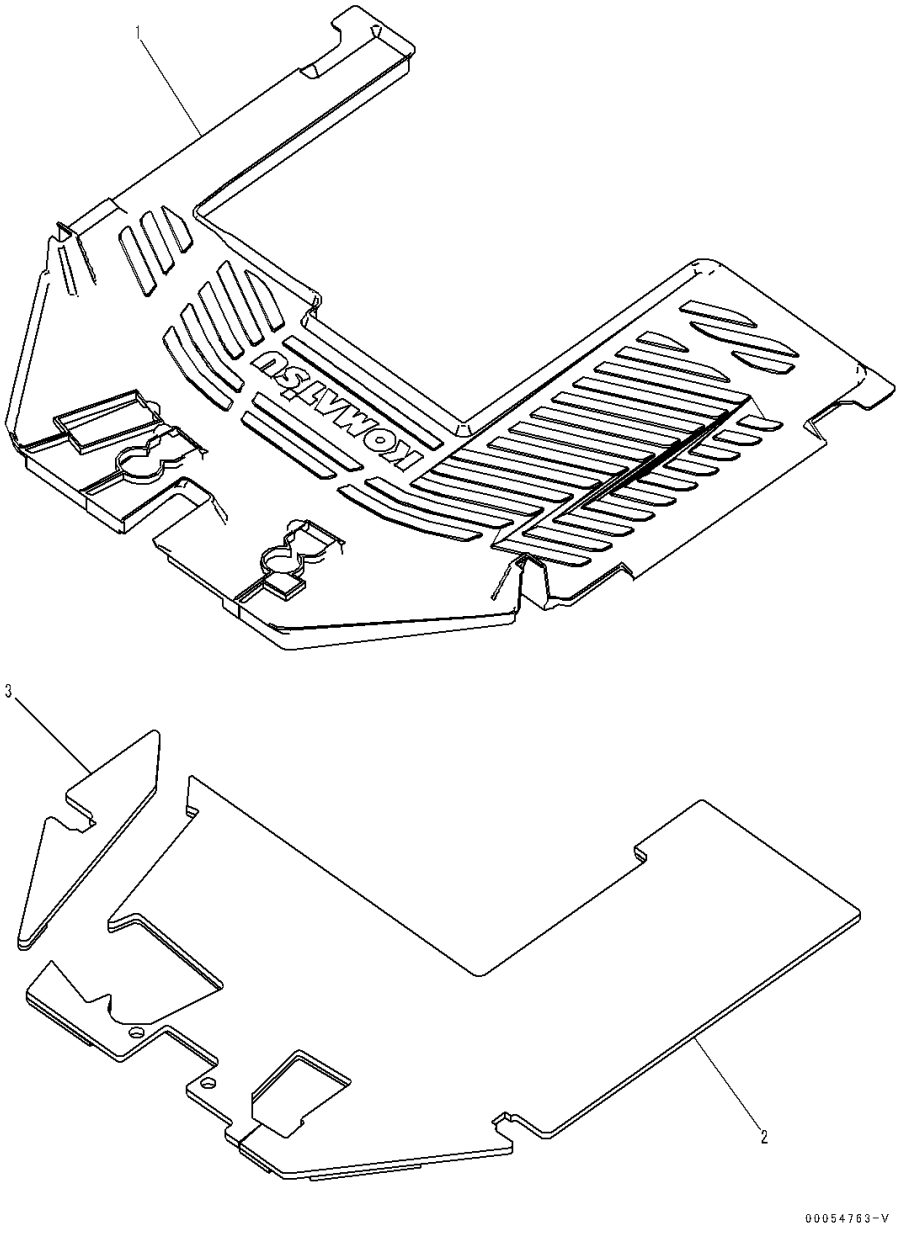

Index	Code	Part Number	Description	Qty	Serial Number
1		423-54-32631	Mat	1	90216-
2		423-54-32612	Sheet	1	90216-
3		423-54-32622	Sheet	1	90216-

FIG. K0350-001001 Window Washer Tank

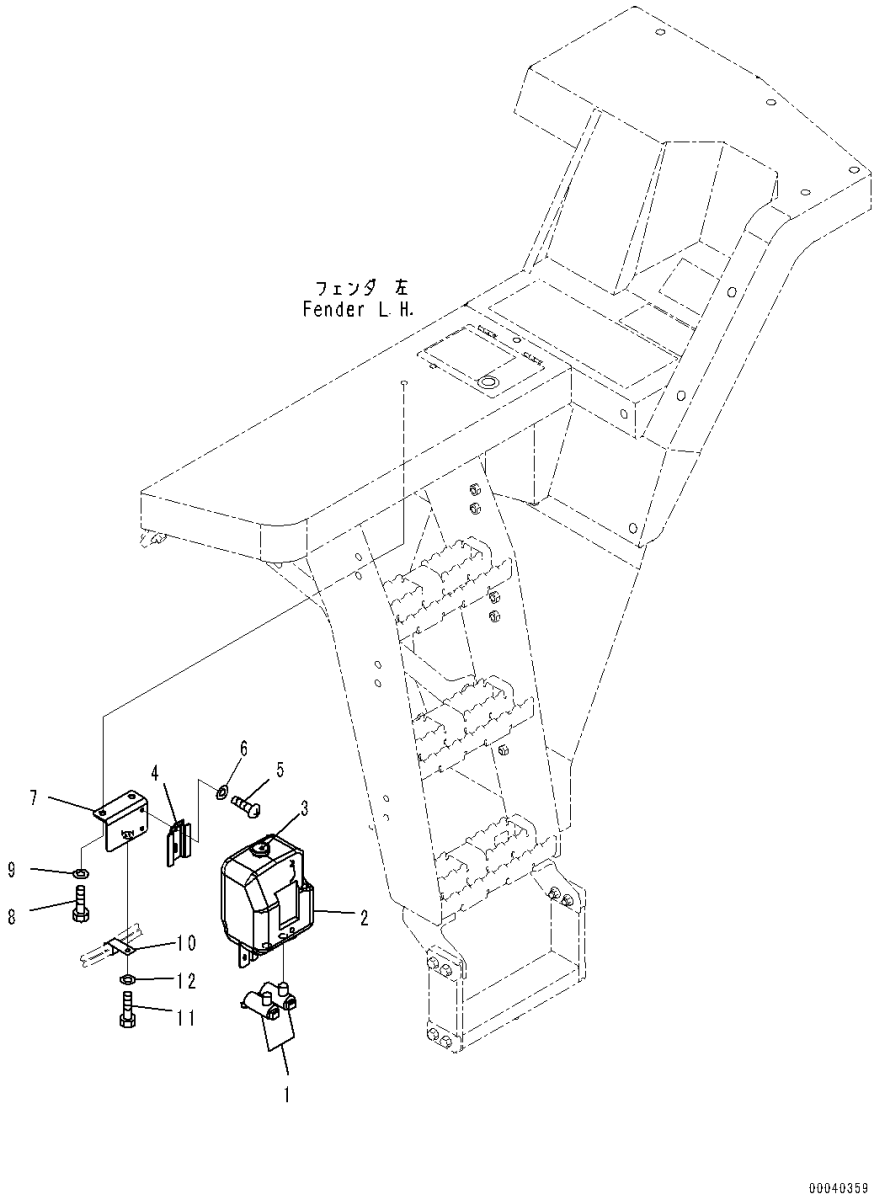

Index	Code	Part Number	Description	Qty	Serial Number
		423-947-1101	Tank Assembly	1	90216-
1		423-947-1110	• Pump Assembly	2	90216-
2		423-947-1121	• Tank	1	90216-
3		423-947-2150	• • Cap	1	90216-
4		421-07-15170	Bracket	1	90216-
5		01220-40616	Screw, Philips Head	2	90216-
6		01643-30623	Washer	2	90216-
7		421-07-36211	Bracket	1	90216-
8		01010-81020	Bolt	2	90216-
9		01643-31032	Washer	2	90216-
10		04434-51210	Clip	1	90216-
11		01010-81020	Bolt	1	90216-
12		01643-31032	Washer	1	90216-

FIG. K0711-004001 Air Conditioner Related Parts (With Monocoque Type ROPS Cab, Monocoque Type ROPS Cab, Both Sash Window) (Compressor)

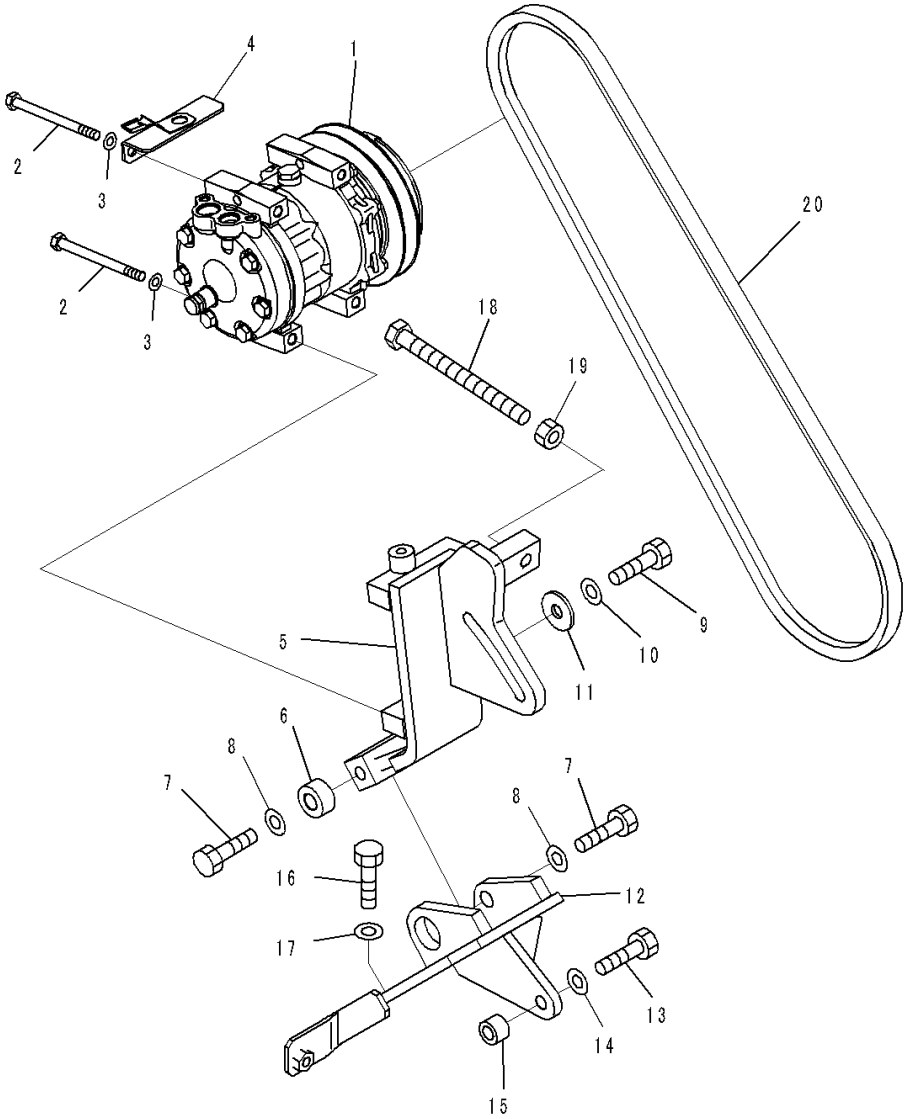

Index	Code	Part Number	Description	Qty	Serial Number
1		423-S62-4330	Compressor Assembly	1	90216-
2		363-15-16110	Bolt	4	90216-
3		01643-30823	Washer	4	90216-
4		421-S62-4340	Bracket	1	90216-
5		421-S62-4210	Bracket	1	90216-
6		198-38-12460	Spacer	1	90216-
7		01010-81440	Bolt	2	90216-
8		01643-31445	Washer, Flat	2	90216-
9		01010-81240	Bolt	1	90216-
10		01643-31232	Washer	1	90216-
11		424-54-14220	Washer	1	90216-
12		421-S62-4230	Bracket	1	90216-
13		01010-81045	Bolt	1	90216-
14		01643-31032	Washer	1	90216-
15		418-09-11130	Spacer	1	90216-
16		01010-81030	Bolt	3	90216-
17		01643-31032	Washer	3	90216-
18		21J-978-2480	Bolt	1	90216-
19		01580-11411	Nut	1	90216-
20		04120-21757	V-belt	1	90216-

FIG. K0711-004002 Air Conditioner Related Parts (With Monocoque Type ROPS Cab, Monocoque Type ROPS Cab, Both Sash Window) (Piping) (1/2)

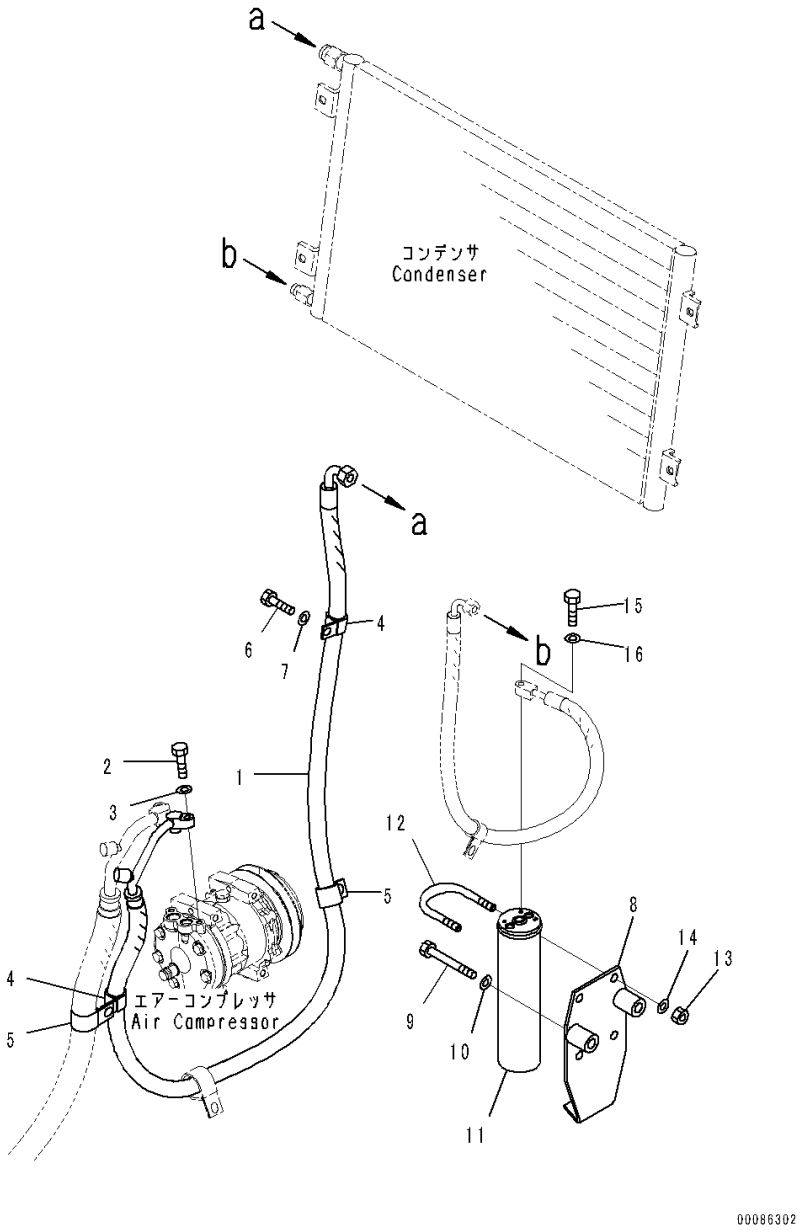

Index	Code	Part Number	Description	Qty	Serial Number
1		421-S62-4150	Hose	1	90216-
		AN51439-D0041	• O-ring	2	90216-
2		01010-80830	Bolt	1	90216-
3		01643-30823	Washer	1	90216-
4		04434-52310	Clip	2	90216-
5		04434-52712	Clip	2	90216-
6		01010-81020	Bolt	3	90216-
7		01643-31032	Washer	3	90216-
8		421-S62-4130	Bracket	1	90216-
9		01010-81060	Bolt	2	90216-
10		01643-31032	Washer	2	90216-
11		423-07-31571	Receiver, Dryer	1	90216-
12		07283-36155	Clip	2	90216-
13		01597-01009	Nut	4	90216-
14		01643-31032	Washer	4	90216-
15		01010-80630	Bolt	1	90216-
16		01643-30623	Washer	1	90216-

FIG. K0711-004003 Air Conditioner Related Parts (With Monocoque Type ROPS Cab, Monocoque Type ROPS Cab, Both Sash Window) (Piping) (2/2)

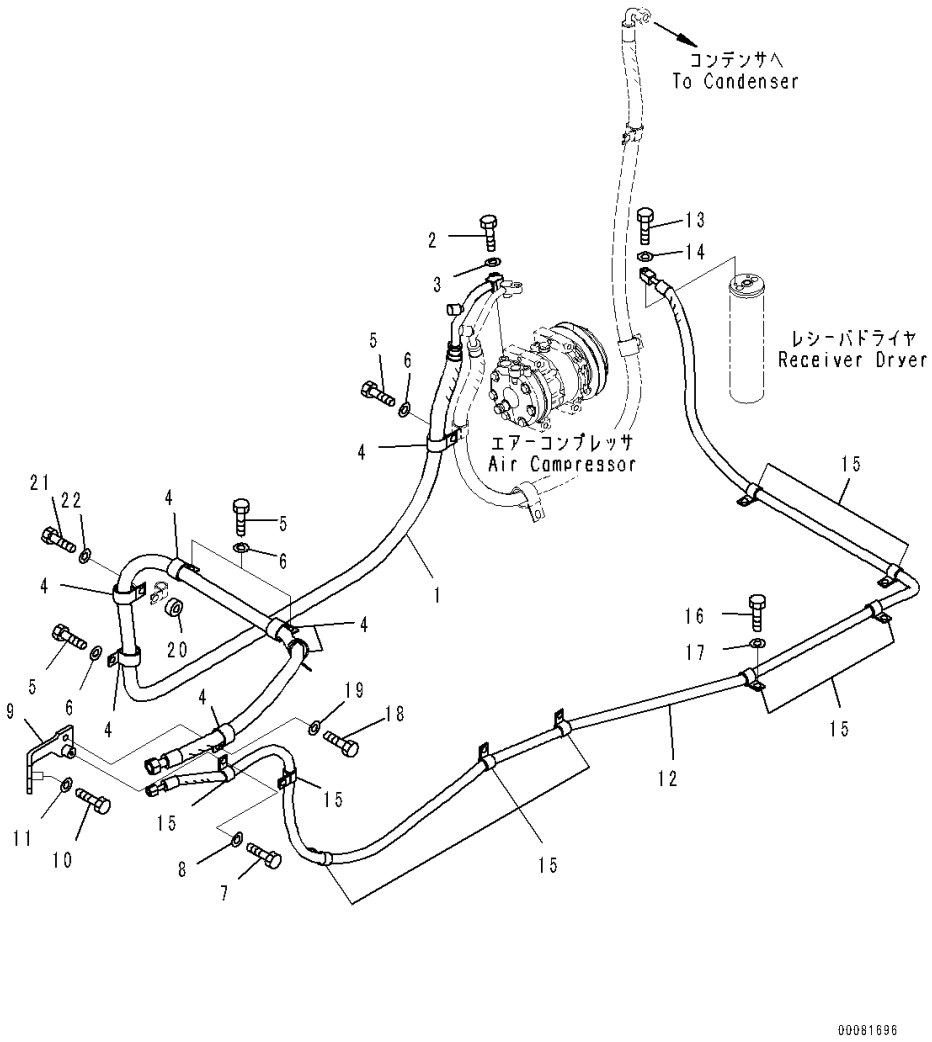

Index	Code	Part Number	Description	Qty	Serial Number
1		421-S62-4510	Hose	1	90216-
		AN51439-D0051	• O-ring	2	90216-
2		01010-80830	Bolt	1	90216-
3		01643-30823	Washer	1	90216-
4		04434-53212	Clip	7	90216-
5		01010-81020	Bolt	5	90216-
6		01643-31032	Washer	5	90216-
7		01010-81020	Bolt	1	90216-
8		01643-31032	Washer	1	90216-
9		421-S62-4530	Bracket	1	90216-
10		01010-81025	Bolt	2	90216-
11		01643-31032	Washer	2	90216-
12		421-S62-4520	Hose	1	90216-
		AN51439-D0031	• O-ring	2	90216-
13		01010-80630	Bolt	1	90216-
14		01643-30623	Washer	1	90216-
15		04434-51910	Clip	9	90216-
16		01010-81020	Bolt	8	90216-
17		01643-31032	Washer	8	90216-
18		01010-81025	Bolt	1	90216-
19		01643-31032	Washer	1	90216-
20		103-21-21260	Boss	1	90216-
21		01010-81030	Bolt	1	90216-
22		01643-31032	Washer	1	90216-

FIG. K0713-002001 Heater Piping (Front)

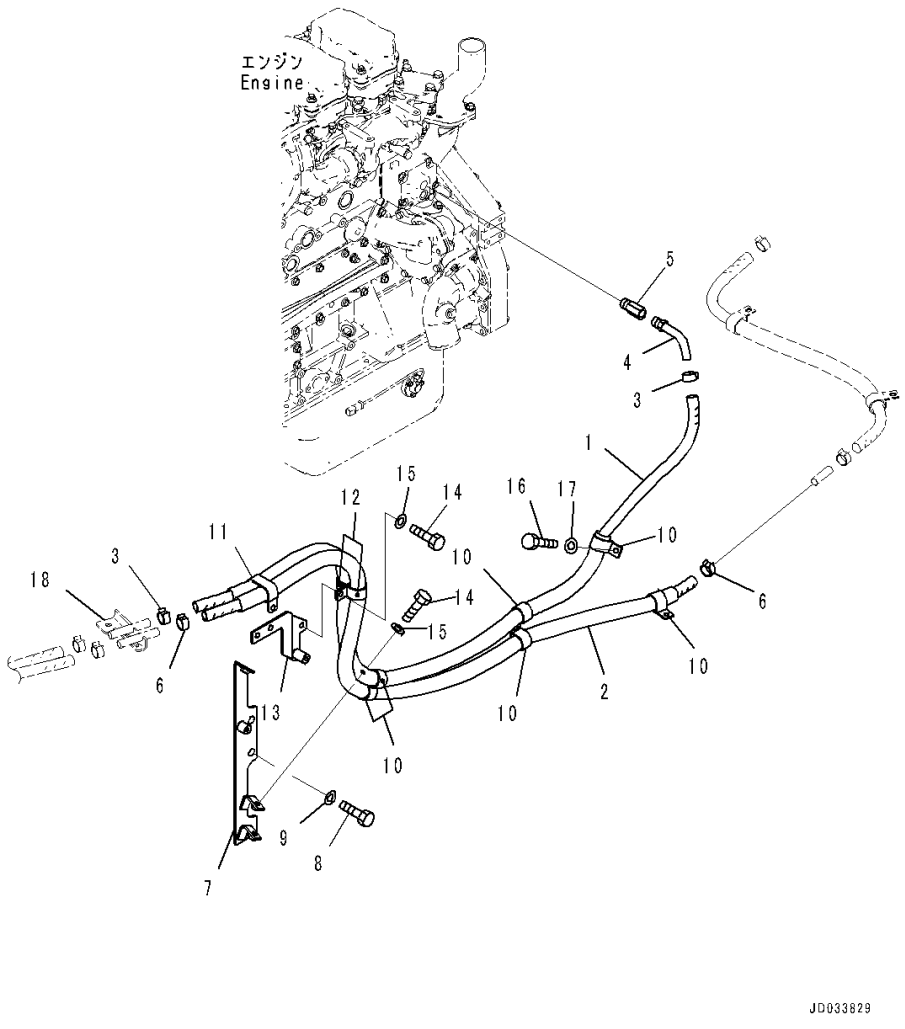

Index	Code	Part Number	Description	Qty	Serial Number
1		421-07-41140	Hose	1	90216-
2		421-07-41150	Hose	1	90216-
3		09479-02400	Clip	2	90216-
4		424-07-11360	Elbow	1	90216-
5		281-81-12930	Joint	1	90216-
6		09479-02400	Clip	2	90216-
7		421-07-41160	Bracket	1	90216-
8		01010-81430	Bolt	2	90216-
9		01643-31445	Washer, Flat	2	90216-
10		04434-53411	Clip	6	90216-
11		176-911-4220	Clip	1	90216-
12		04434-53411	Clip	2	90216-
13		421-07-41170	Bracket	1	90216-
14		01010-81025	Bolt	6	90216-
15		01643-31032	Washer	6	90216-
16		01010-81020	Bolt	1	90216-
17		01643-31032	Washer	1	90216-
18		(421-07-41240)	Bracket(Refer to Page 586)		-

FIG. K0713-002002 Heater Piping (Rear)

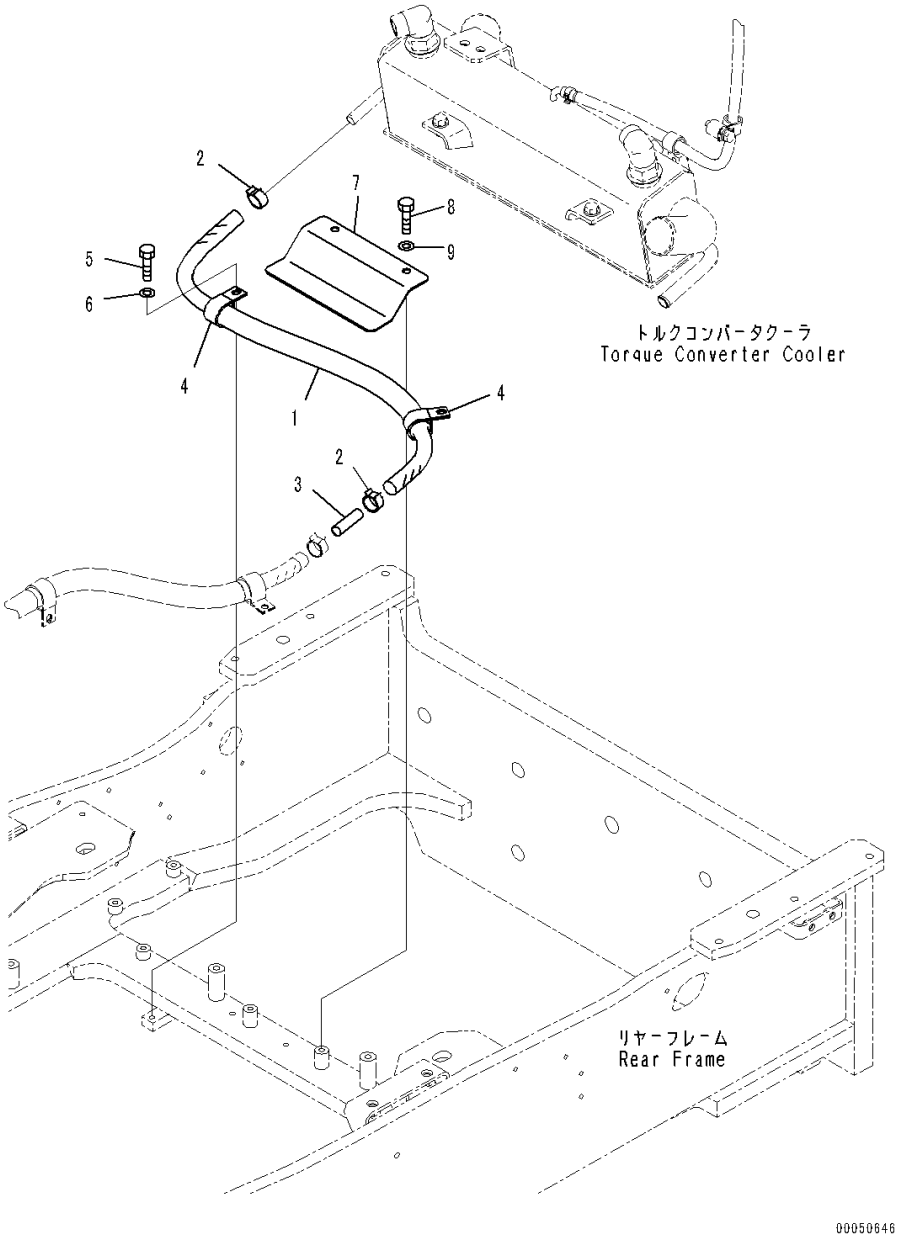

Index	Code	Part Number	Description	Qty	Serial Number
1		421-07-41130	Hose	1	90216-
2		09479-02400	Clip	2	90216-
3		09484-00560	Connector	1	90216-
4		04434-53411	Clip	2	90216-
5		01010-81020	Bolt	2	90216-
6		01643-31032	Washer	2	90216-
7		421-07-41230	Cover	1	90216-
8		01010-81020	Bolt	2	90216-
9		01643-31032	Washer	2	90216-

FIG. K0714-001001 Cooler and Heater Box (With Cooler and Heater Box)

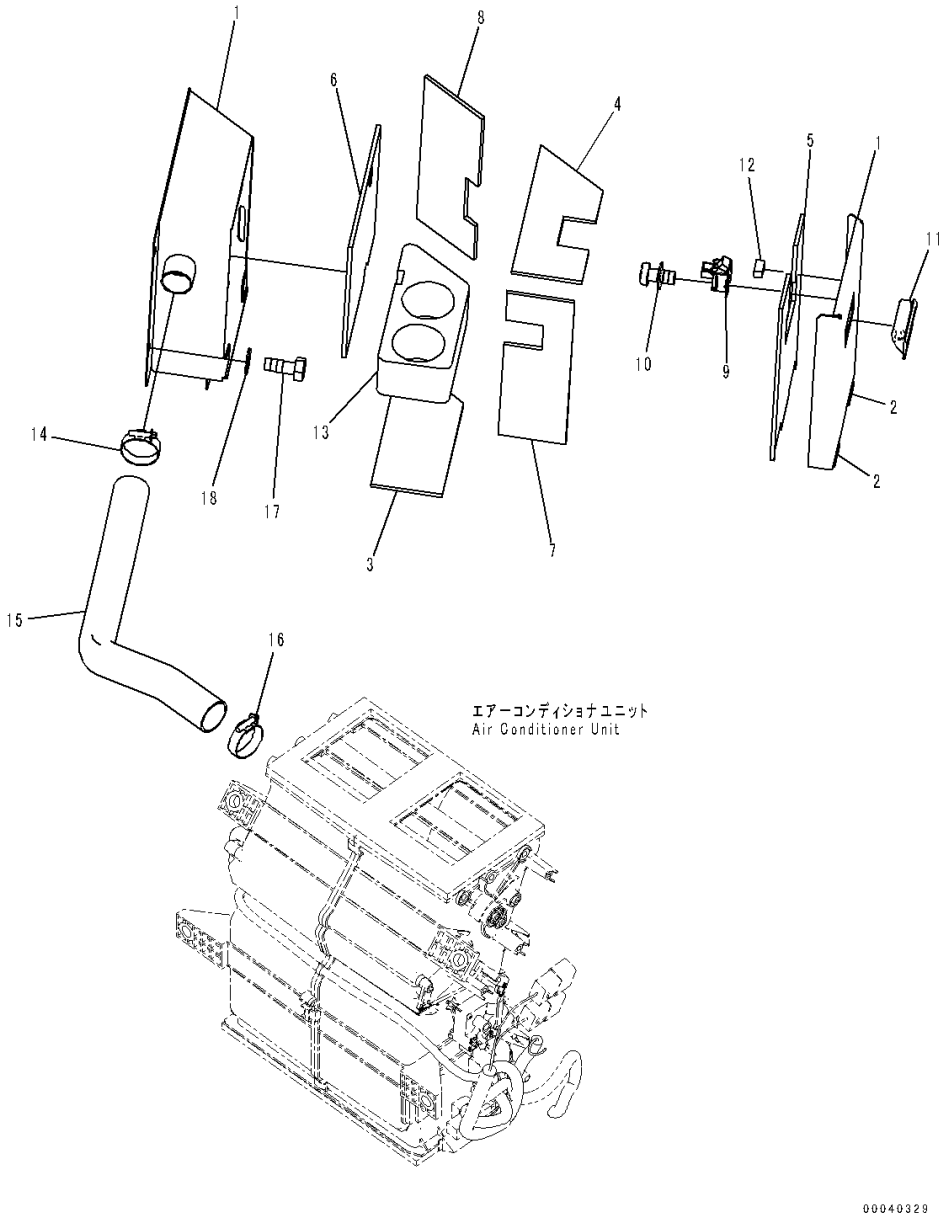

Index	Code	Part Number	Description	Qty	Serial Number
		418-54-43300	Box	1	90216-
1	C1		• Box	1	90216-
2		421-09-21360	• • Hinge, Welded	2	90216-
3		423-54-33310	• Sheet	1	90216-
4		423-54-32742	• Sheet	1	90216-
5		423-54-32752	• Sheet	1	90216-
6		423-54-32762	• Sheet	1	90216-
7		423-54-32772	• Sheet	1	90216-
8		423-54-32793	• Sheet	1	90216-
9		22M-54-19170	• Stopper	1	90216-
10		01023-10510	• Screw	2	90216-
11		418-926-3660	• Handle	1	90216-
12		423-54-33331	• Plate	1	90216-
13		423-54-33320	• Cushion	1	90216-
14		07281-00489	Clamp, Hose	1	90216-
15		423-54-33341	Hose	1	90216-
16		07281-00489	Clamp, Hose	1	90216-
17		01010-80612	Bolt	4	90216-
18		01643-30623	Washer	4	90216-

FIG. K0714-002001 Cooler and Heater Without Box (Without Cooler and Heater Box)

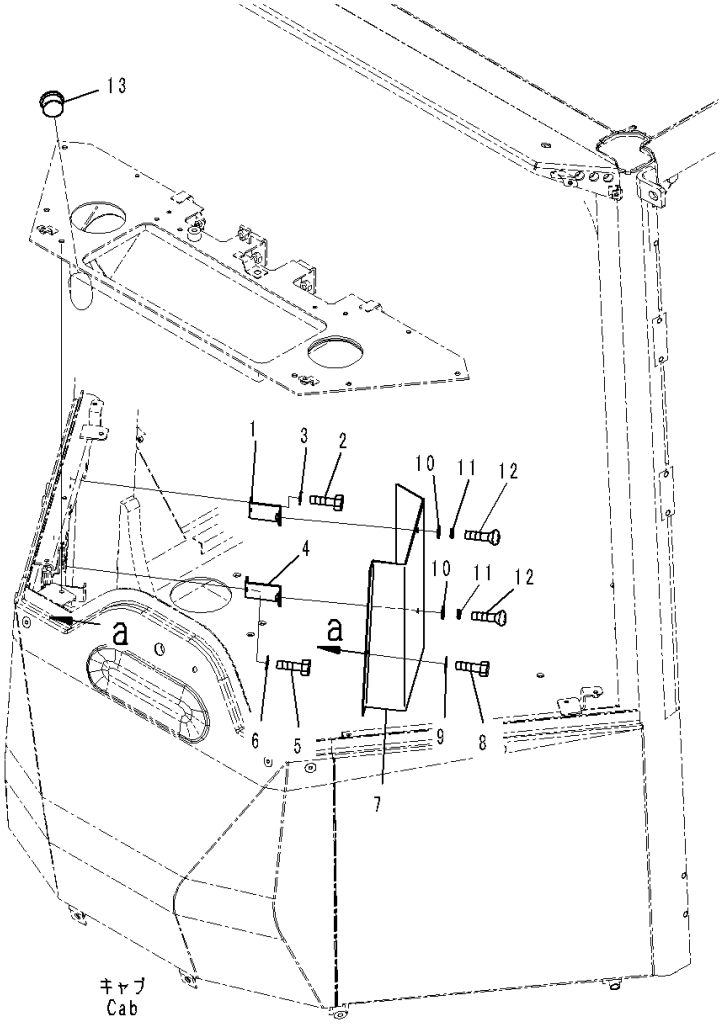

Index	Code	Part Number	Description	Qty	Serial Number
1		423-54-33350	Bracket	1	90216-
2		01010-80612	Bolt	2	90216-
3		01643-30623	Washer	2	90216-
4		423-54-33360	Bracket	1	90216-
5		01010-80612	Bolt	2	90216-
6		01643-30623	Washer	2	90216-
7		423-54-33371	Cover	1	90216-
8		01010-80612	Bolt	2	90216-
9		01643-30623	Washer	2	90216-
10		23S-55-55510	Washer	2	90216-
11		23S-55-51970	Washer	2	90216-
12		01225-70620	Screw, Philips Head	2	90216-
13		423-07-31360	Cap	1	90216-

FIG. K0810-005001 Radio (AM-FM Radio, North America)

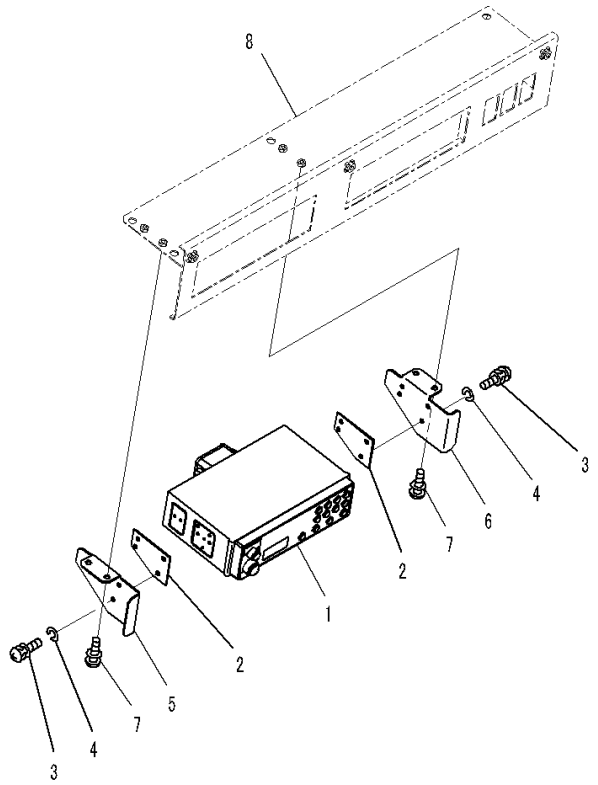

JD033833

Index	Code	Part Number	Description	Qty	Serial Number
1		425-07-24133	Radio, AM-FM	1	90446-
		425-S67-2180	• Knob Kit	1	90216-
2		421-925-3140	Plate	2	90216-
3		01023-60412	Screw	4	90216-
4		01601-20410	Washer	4	90216-
5		418-925-3471	Plate, L.H.	1	90216-
6		418-925-3481	Plate, R.H.	1	90216-
7		01023-10510	Screw	4	90216-
8		(423-926-4823)	Bracket(Refer to Page 535)		-

FIG. K0810-002001 Radio (AM-FM Radio, Europe and Asia)

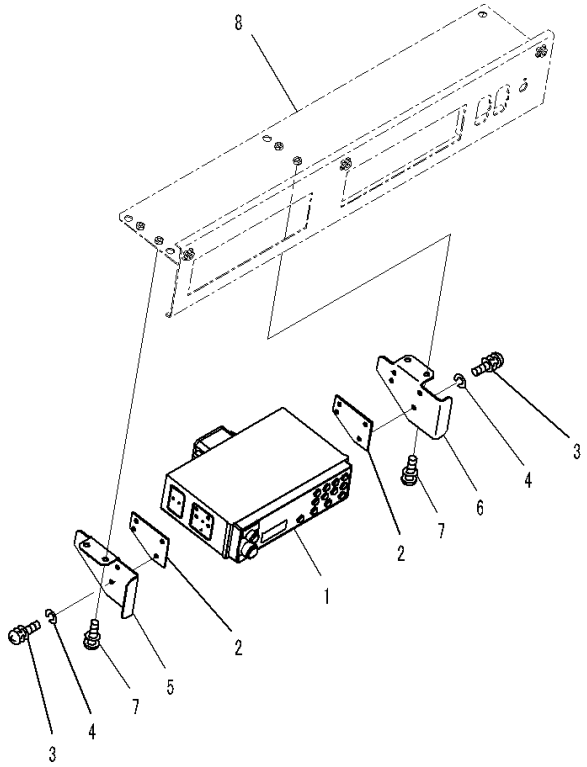

JD033834

Index	Code	Part Number	Description	Qty	Serial Number
1		425-07-24143	Radio, AM-FM	1	90446-
		425-S67-2180	• Knob Kit	1	90216-
2		421-925-3140	Plate	2	90216-
3		01023-60412	Screw	4	90216-
4		01601-20410	Washer	4	90216-
5		418-925-3471	Plate, L.H.	1	90216-
6		418-925-3481	Plate, R.H.	1	90216-
7		01023-10510	Screw	4	90216-
8		(423-926-4823)	Bracket(Refer to Page 535)		-

FIG. K0810-003001 Radio (AM-FM Stereo Radio, Cassette, North America)

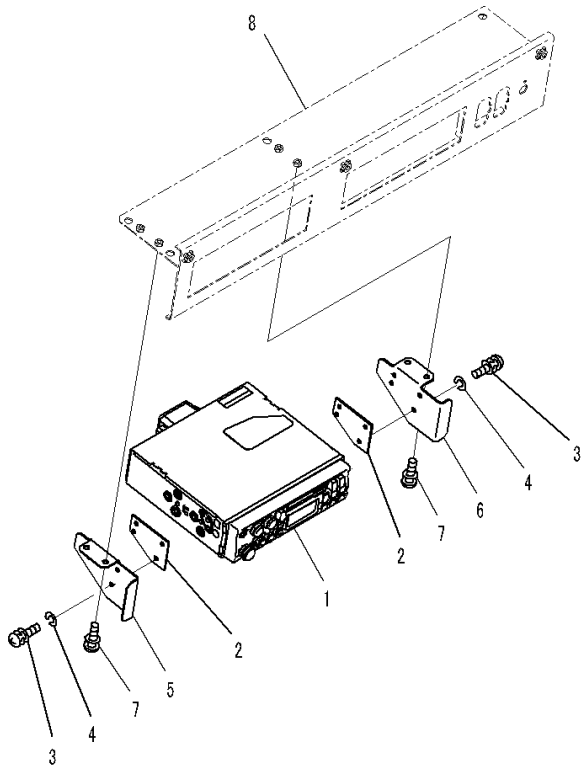

JD033837

Index	Code	Part Number	Description	Qty	Serial Number
1		425-S67-2152	Radio, AM-FM Stereo with Cassette	1	90216-
		425-S67-2180	• Knob Kit	1	90216-
2		421-925-3140	Plate	2	90216-
3		01023-60412	Screw	4	90216-
4		01601-20410	Washer	4	90216-
5		418-925-3471	Plate, L.H.	1	90216-
6		418-925-3481	Plate, R.H.	1	90216-
7		01023-10510	Screw	4	90216-
8		(423-926-4823)	Bracket(Refer to Page 535)		-

FIG. K0810-006001 Radio (AM-FM Stereo Radio, Cassette, Europe and Asia)

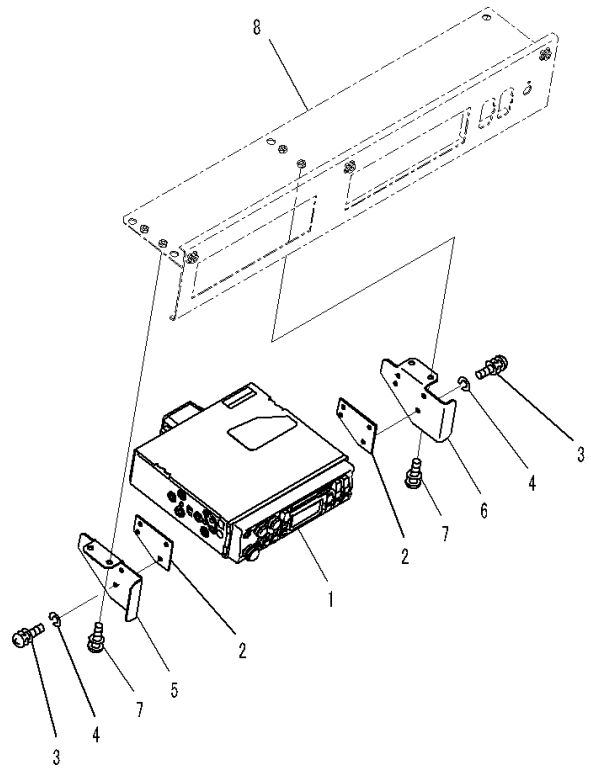

JD033836

Index	Code	Part Number	Description	Qty	Serial Number
1		425-S67-2162	Stereo System Assembly	1	90216-
		425-S67-2180	• Knob Kit	1	90216-
2		421-925-3140	Plate	2	90216-
3		01023-60412	Screw	4	90216-
4		01601-20410	Washer	4	90216-
5		418-925-3471	Plate, L.H.	1	90216-
6		418-925-3481	Plate, R.H.	1	90216-
7		01023-10510	Screw	4	90216-
8		(423-926-4823)	Bracket(Refer to Page 535)		-

FIG. K0810-004001 Parts For Less Radio (Without AM-FM Radio)

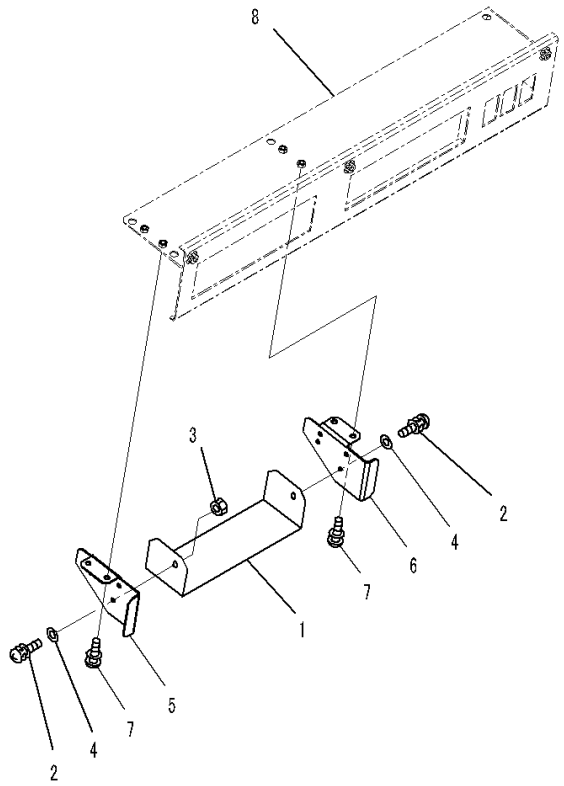

JD033835

Index	Code	Part Number	Description	Qty	Serial Number
1		421-925-3510	Cover	1	90216-
2		01023-60412	Screw	2	90216-
3		01580-10403	Nut	2	90216-
4		01640-20408	Washer	2	90216-
5		418-925-3471	Plate, L.H.	1	90216-
6		418-925-3481	Plate, R.H.	1	90216-
7		01023-10510	Screw	4	90216-
8		(423-926-4823)	Bracket(Refer to Page 535)		-

FIG. K4100-001001 Floor Support

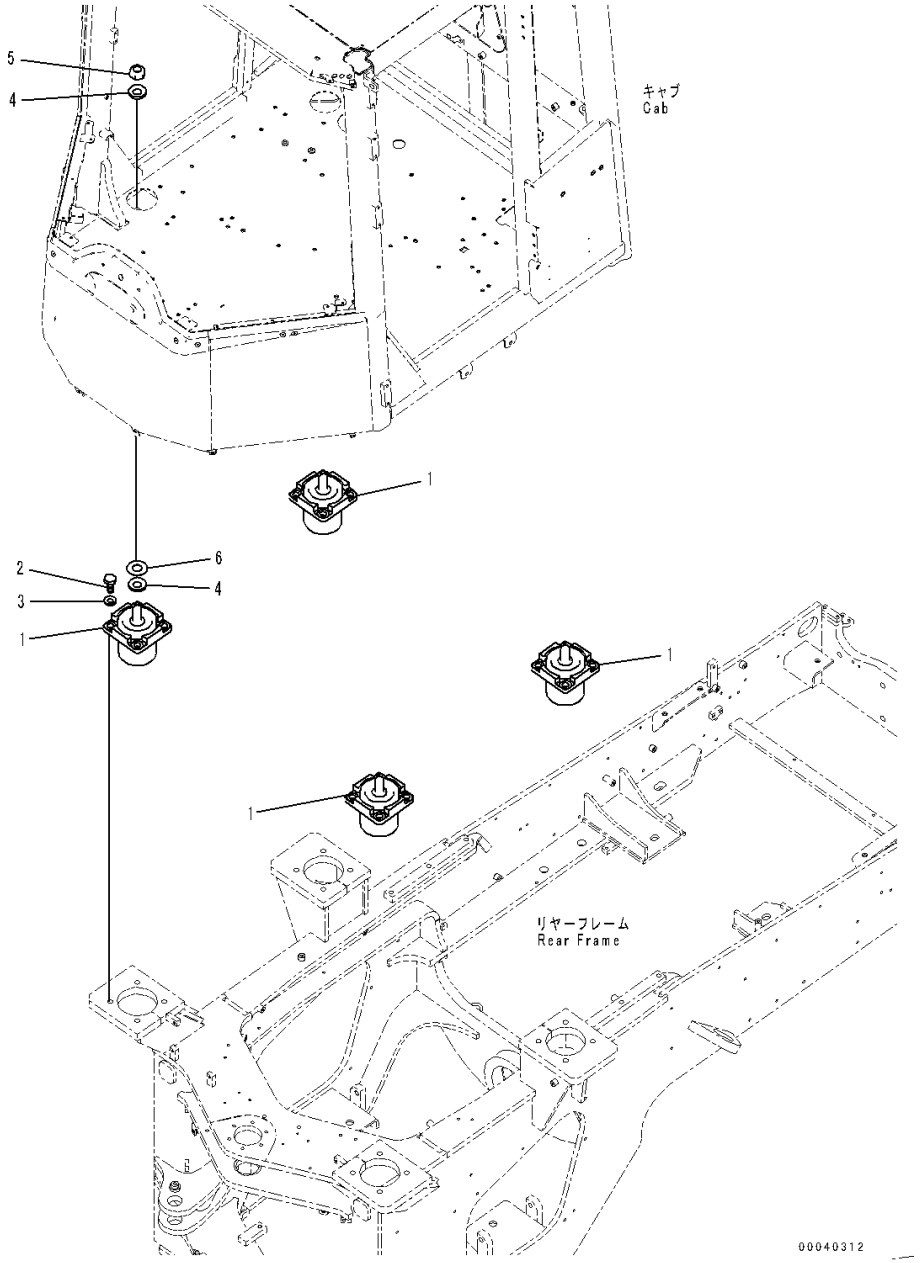

Index	Code	Part Number	Description	Qty	Serial Number
1		423-54-41631	Viscous Mount	4	90690-
2		01010-82055	Bolt	16	90216-
3		01643-32060	Washer	16	90216-
4		01643-33080	Washer	8	90216-
5		01596-03024	Nut, Flanged	4	90216-
6		424-928-3130	Shim, T=1.0mm	4	90216-

FIG. K4202-022001 Loader Control Unit (Console Slider)

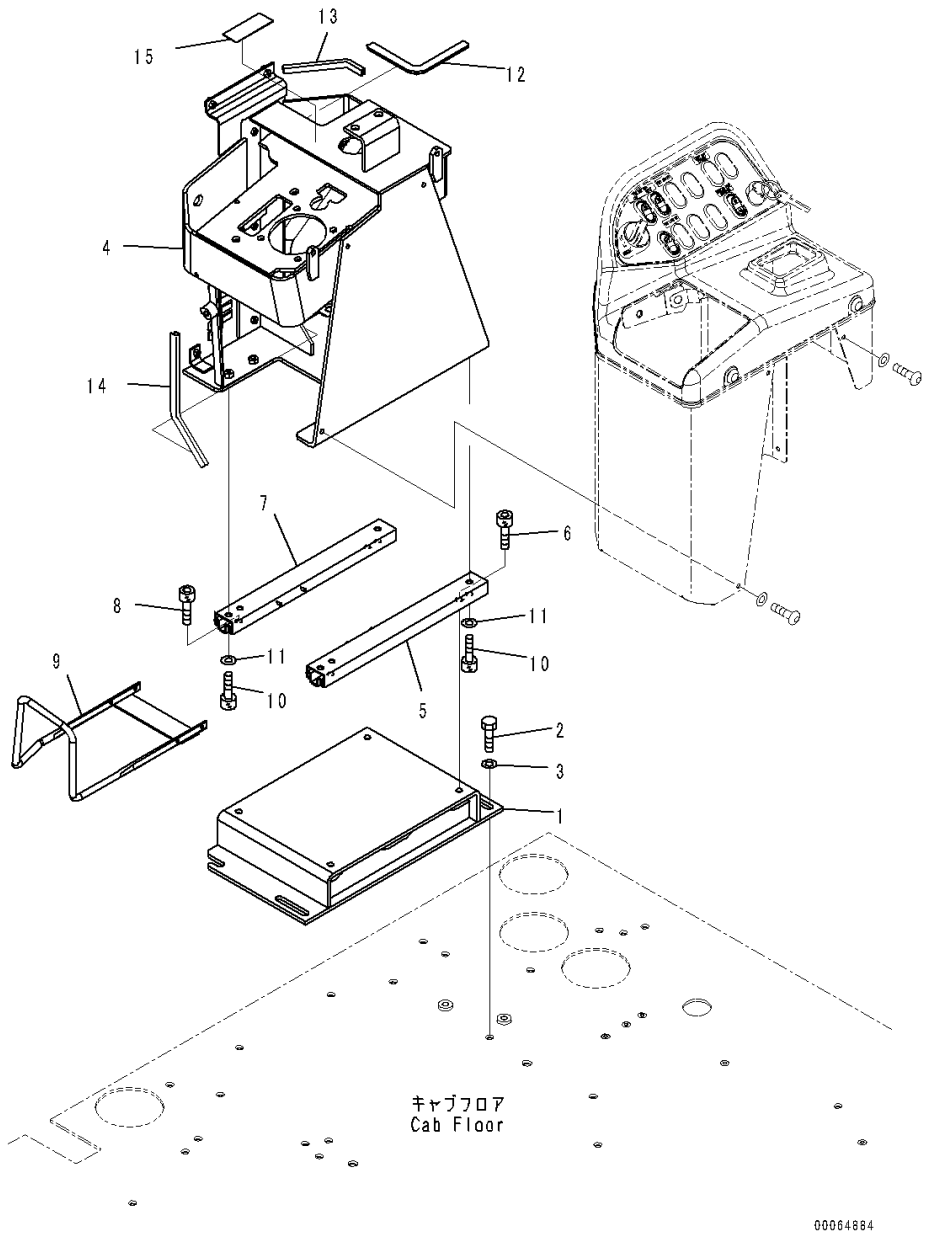

Index	Code	Part Number	Description	Qty	Serial Number
		Note: This list covers following specifications.			
		With Multi-function Mono Lever			
		With Multi-function Mono Lever and 1-lever Attachment Control			
1		421-43-49171	Bracket	1	90216-
2		01010-81025	Bolt	4	90216-
3		01643-31032	Washer	4	90216-
4		421-V91-4111	Bracket	1	90216-
5		22M-43-21220	Adjuster, L.H.	1	90216-
6		01252-70820	Bolt	2	90216-
7		22M-43-21230	Adjuster, R.H.	1	90216-
8		01252-70820	Bolt	2	90216-
9		423-43-48281	Pipe	1	90216-
10		01252-70820	Bolt	6	90216-
11		01643-50823	Washer	6	90216-
12		423-54-42990	Finisher	1	90216-
13		423-06-42420	Finisher	1	90216-
14		423-54-42680	Finisher	1	90216-
15		421-V91-4160	Sheet	1	90216-

FIG. K4202-022002 Loader Control Unit (Inner Parts, PPC Valve)

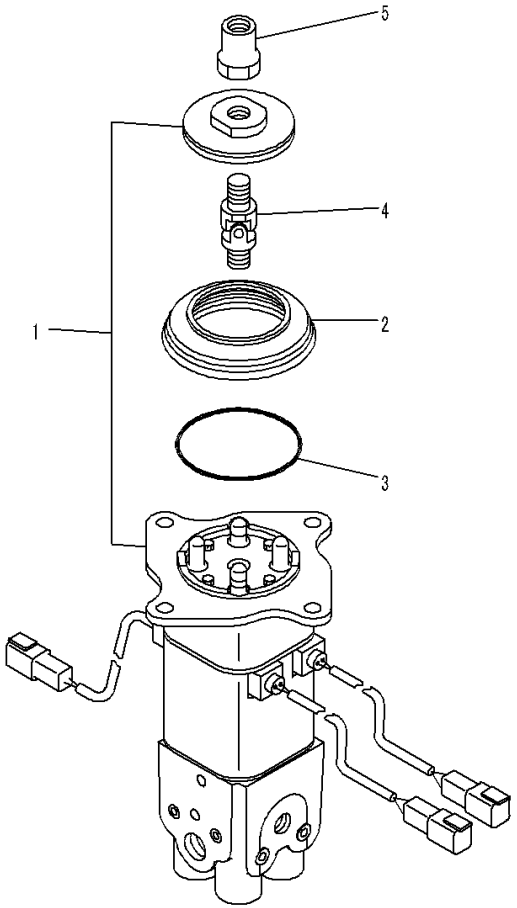

00023143

Index	Code	Part Number	Description	Qty	Serial Number
		Note: This list covers following specifications. With Multi-function Mono Lever With Multi-function Mono Lever and 1-lever Attachment Control			
1		702-16-03461	Valve, Pilot	1	90216-
2		702-16-58820	• Boot	1	90216-
3		07000-12070	• O-ring	1	90216-
4		702-16-51240	• Joint, Universal	1	90216-
5		702-16-53230	• Nut	1	90216-

FIG. K4202-022003A Loader Control Unit (With Multi-function Mono Lever) (Lever)

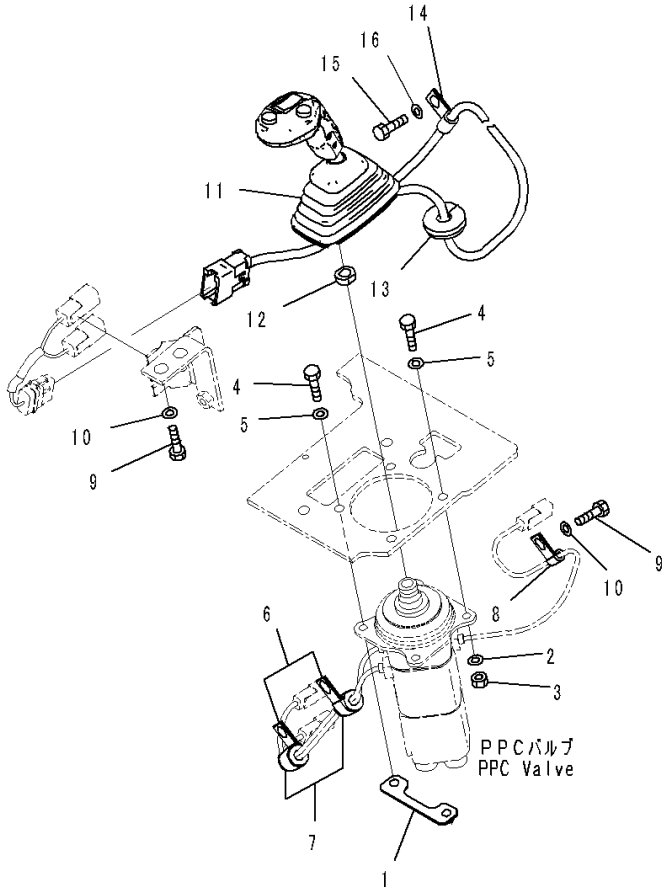

JA005646

Index	Code	Part Number	Description	Qty	Serial Number
1		423-V91-4130	Plate	1	90216-
2		01643-30823	Washer	2	90216-
3		01580-10806	Nut	2	90216-
4		01010-80825	Bolt	4	90216-
5		01643-30823	Washer	4	90216-
6		04434-51712	Clip	2	90216-
7		07095-20211	Cushion	2	90216-
8		04434-50610	Clip	1	90216-
9		01010-81020	Bolt	3	90216-
10		01643-31032	Washer	3	90216-
11		423-V91-4144	Lever Assembly	1	90904-
12		23S-43-51240	Nut	1	90216-
13		135-06-34250	Grommet	1	90216-
14		04434-51012	Clip	1	90216-
15		01010-81020	Bolt	1	90216-
16		01643-31032	Washer	1	90216-

FIG. K4202-022004 Loader Control Unit (With Multi-function Mono Lever) (Wiring Harness)

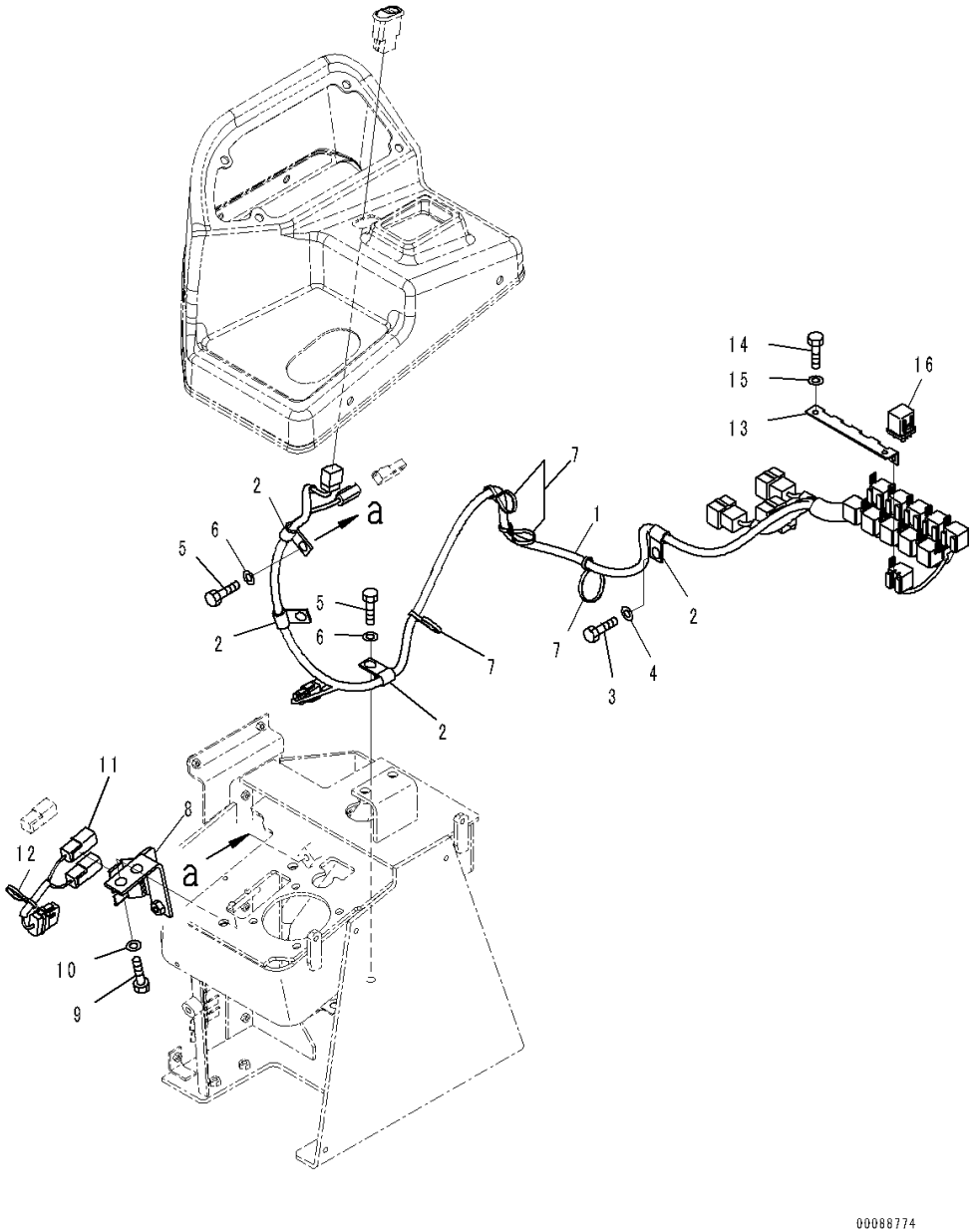

Index	Code	Part Number	Description	Qty	Serial Number
1		423-V91-4332	Wiring Harness	1	90216-
2		04434-51012	Clip	4	90216-
3		01010-81020	Bolt	1	90216-
4		01643-31032	Washer	1	90216-
5		01010-81025	Bolt	2	90216-
6		01643-31032	Washer	2	90216-
7		08034-40521	Band	4	90216-
8		423-V91-4551	Bracket	1	90216-
9		01010-81020	Bolt	2	90216-
10		01643-31032	Washer	2	90216-
11		423-V91-4561	Wiring Harness	1	90216-
12		08034-40521	Band	1	90216-
13		569-06-61180	Bracket	1	90216-
14		01010-80616	Bolt	2	90216-
15		01643-30623	Washer	2	90216-
16		569-06-61970	Relay	1	90216-

FIG. K4202-022005 Loader Control Unit (With Multi-function Mono Lever) (Cover)

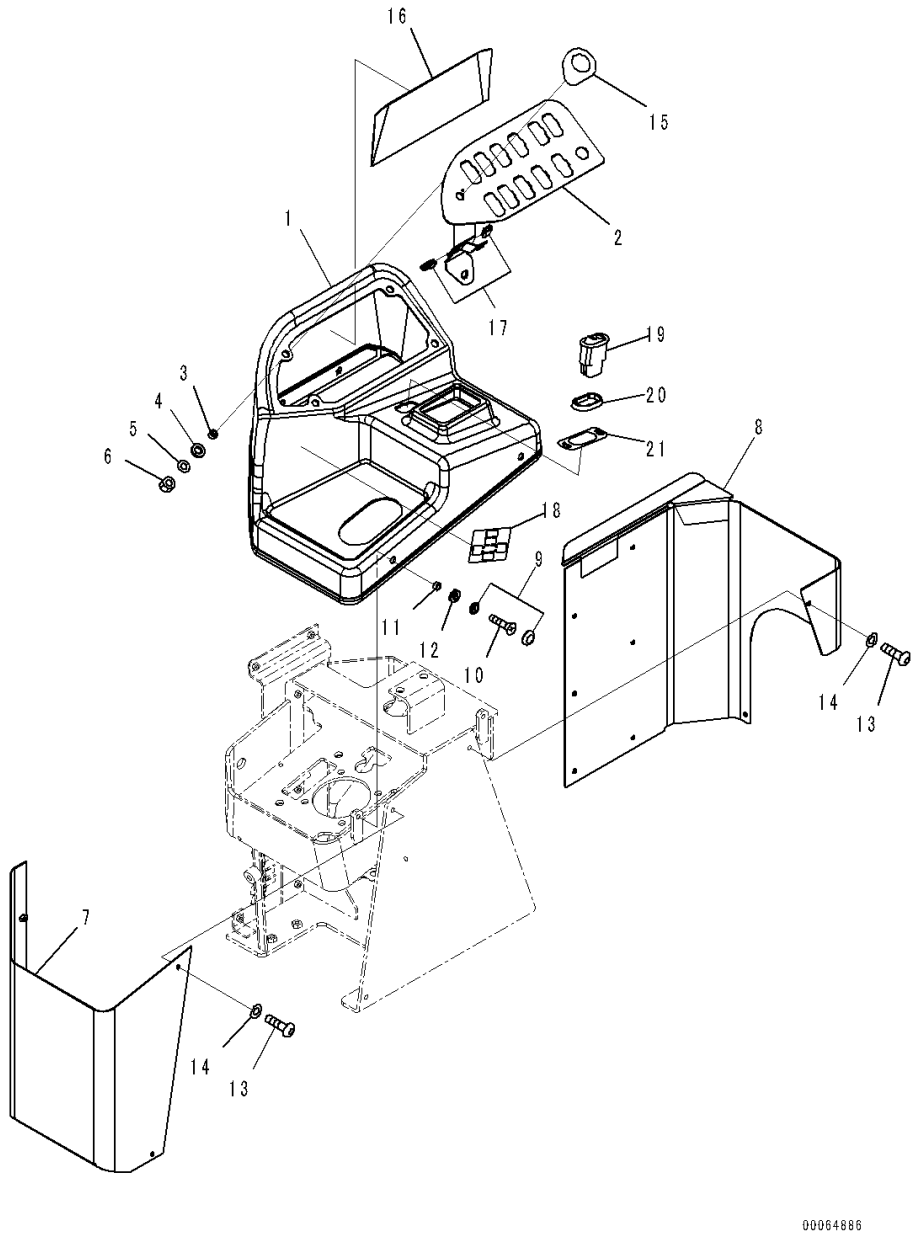

Index	Code	Part Number	Description	Qty	Serial Number
1		423-V91-4311	Cover	1	90216-
2		421-43-48210	Bracket	1	90216-
3		426-56-31890	Collar	4	90216-
4		426-56-31870	Washer	4	90216-
5		01643-30623	Washer	4	90216-
6		01580-10605	Nut	4	90216-
7		421-V91-4120	Cover	1	90216-
8		421-43-48170	Cover	1	90216-
9		421-09-31310	Cap Assembly	4	90216-
10		01224-40620	Screw, Philips Head	4	90216-
11		426-56-31890	Collar	4	90216-
12		426-56-31870	Washer	4	90216-
13		01245-00616	Screw	10	90216-
14		01643-70623	Washer	10	90216-
15		423-93-41190	Plate	1	90216-
16		423-06-42740	Sheet	1	90216-
17		423-06-42430	Finisher	2	90216-
18		421-V91-3140	Plate	1	90216-
19		426-06-33550	Switch	1	90216-
20		418-926-4530	Spacer	1	90216-
21		423-V91-4160	Plate	1	90216-

FIG. K4202-022006 Loader Control Unit (Armrest)

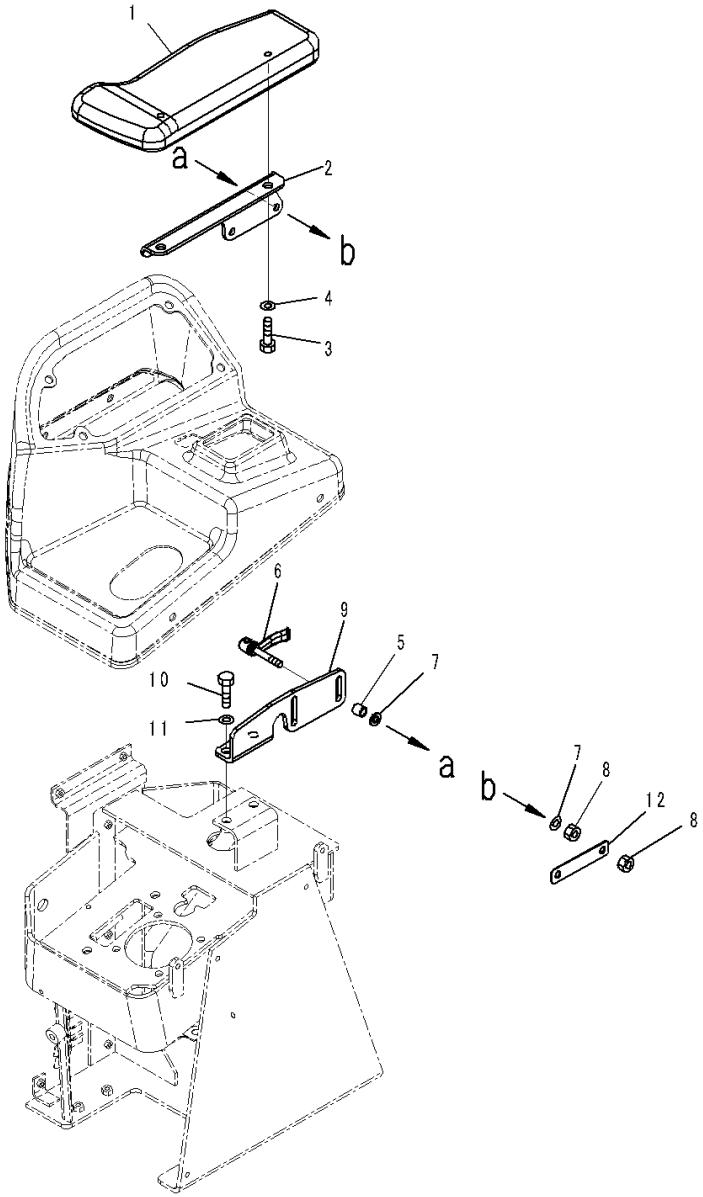

Index	Code	Part Number	Description	Qty	Serial Number
		Note: This list covers following specifications. With Multi-function Mono Lever With Multi-function Mono Lever and 1-lever Attachment Control			
1		423-43-48321	Arm Rest	1	90216-
2		423-43-48420	Bracket	1	90216-
3		01010-81016	Bolt	2	90216-
4		01643-31032	Washer	2	90216-
5		423-43-38160	Pipe	2	90216-
6		423-43-38170	Lever	2	90216-
7		01643-30823	Washer	4	90216-
8		01580-10806	Nut	4	90216-
9		423-43-48410	Bracket	1	90216-
10		01010-81025	Bolt	2	90216-
11		01643-31032	Washer	2	90216-
12		425-43-31141	Plate	1	90216-

FIG. K4202-022007 Loader Control Unit (With Multi-function Mono Lever) (PPC Piping) (1/3)

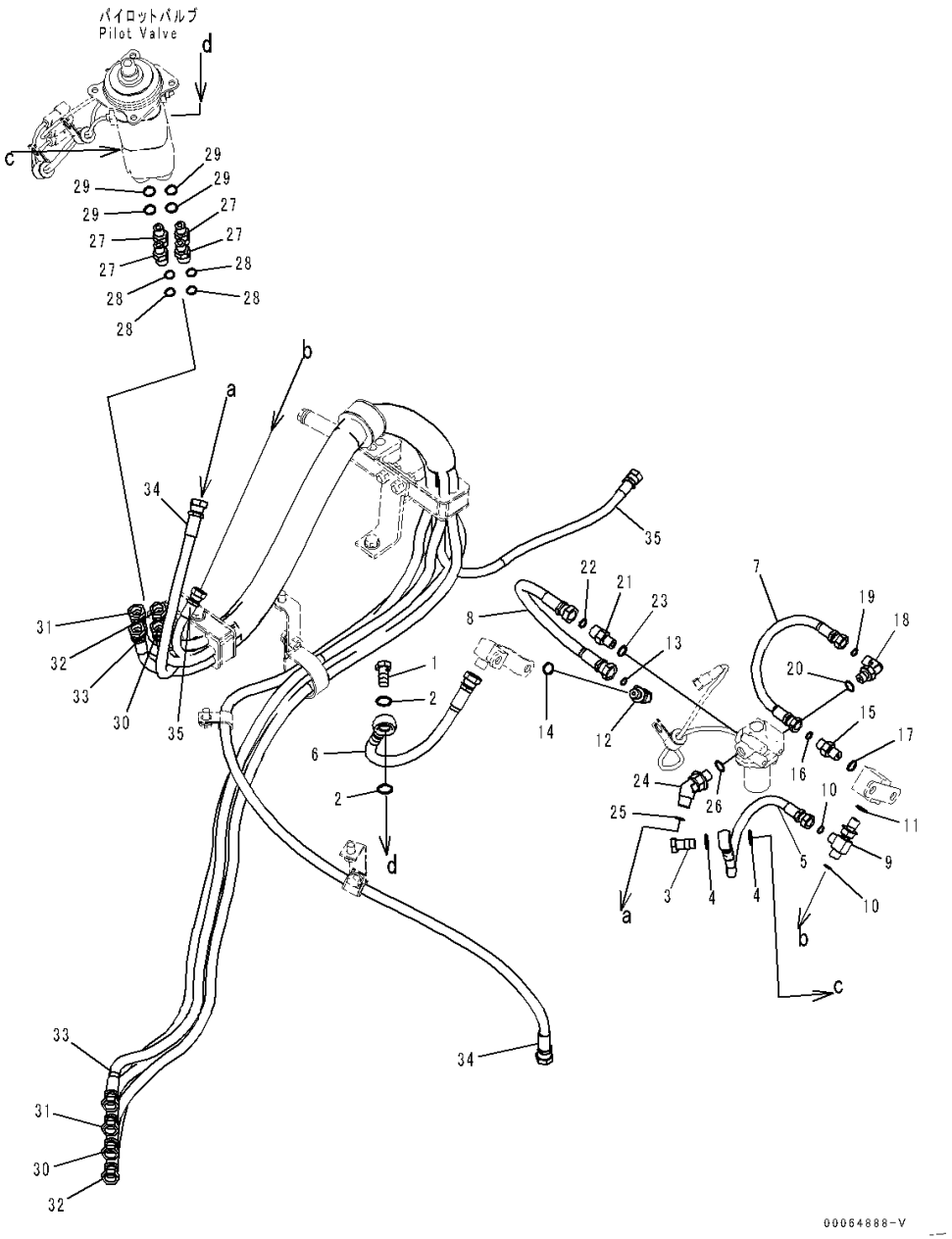

Index	Code	Part Number	Description	Qty	Serial Number
1		20Y-62-18910	Plug	1	90216-
2		07000-12018	O-ring	2	90216-
3		20Y-62-18890	Bolt, Joint	1	90216-
4		07000-12015	O-ring	2	90216-
5		423-V91-4411	Hose	1	90216-
		21U-62-34720	• Band, Black	2	90216-
6		423-S35-4431	Hose	1	90216-
7		02760-00203	Hose, Face Seal Type	1	90216-
8		02760-003A3	Hose, Face Seal Type	1	90216-
9		11Y-62-12330	Tee	1	90216-
10		02896-11008	O-ring	2	90216-
11		07002-11423	O-ring	1	90216-
12		02782-10311	Elbow	1	90216-
13		02896-11009	O-ring	1	90216-
14		07002-11423	O-ring	1	90216-
15		02781-0021D	Union	1	90216-
16		02896-11008	O-ring	1	90216-
17		07002-11423	O-ring	1	90216-
18		02782-10210	Elbow	1	90216-
19		02896-11008	O-ring	1	90216-
20		07002-11423	O-ring	1	90216-
21		02781-0031D	Nipple	1	90216-
22		02896-11009	O-ring	1	90216-
23		07002-11423	O-ring	1	90216-
24		11Y-62-12510	Elbow	1	90216-
25		02896-11009	O-ring	1	90216-
26		07002-11423	O-ring	1	90216-
27		02781-0031D	Nipple	4	90216-
28		02896-11009	O-ring	4	90216-
29		07002-11423	O-ring	4	90216-
		421-V91-4400	Hose Assembly	1	90216-
30		421-V91-4210	• Hose, Green	1	90216-
		21U-62-34730	• • Band, Green	2	90216-
31		423-V91-4421	• Hose	1	90216-
		21U-62-34750	• • Band, Blue	2	90216-
32		421-V91-4230	• Hose, White	1	90216-
		21U-62-34770	• • Band, White	2	90216-
33		423-V91-4441	• Hose	1	90216-
		21U-62-34710	• • Band, Yellow	2	90216-
34		421-V91-4410	• Hose, Black-Red	1	90216-

FIG. K4202-022007 Loader Control Unit (With Multi-function Mono Lever) (PPC Piping) (1/3)

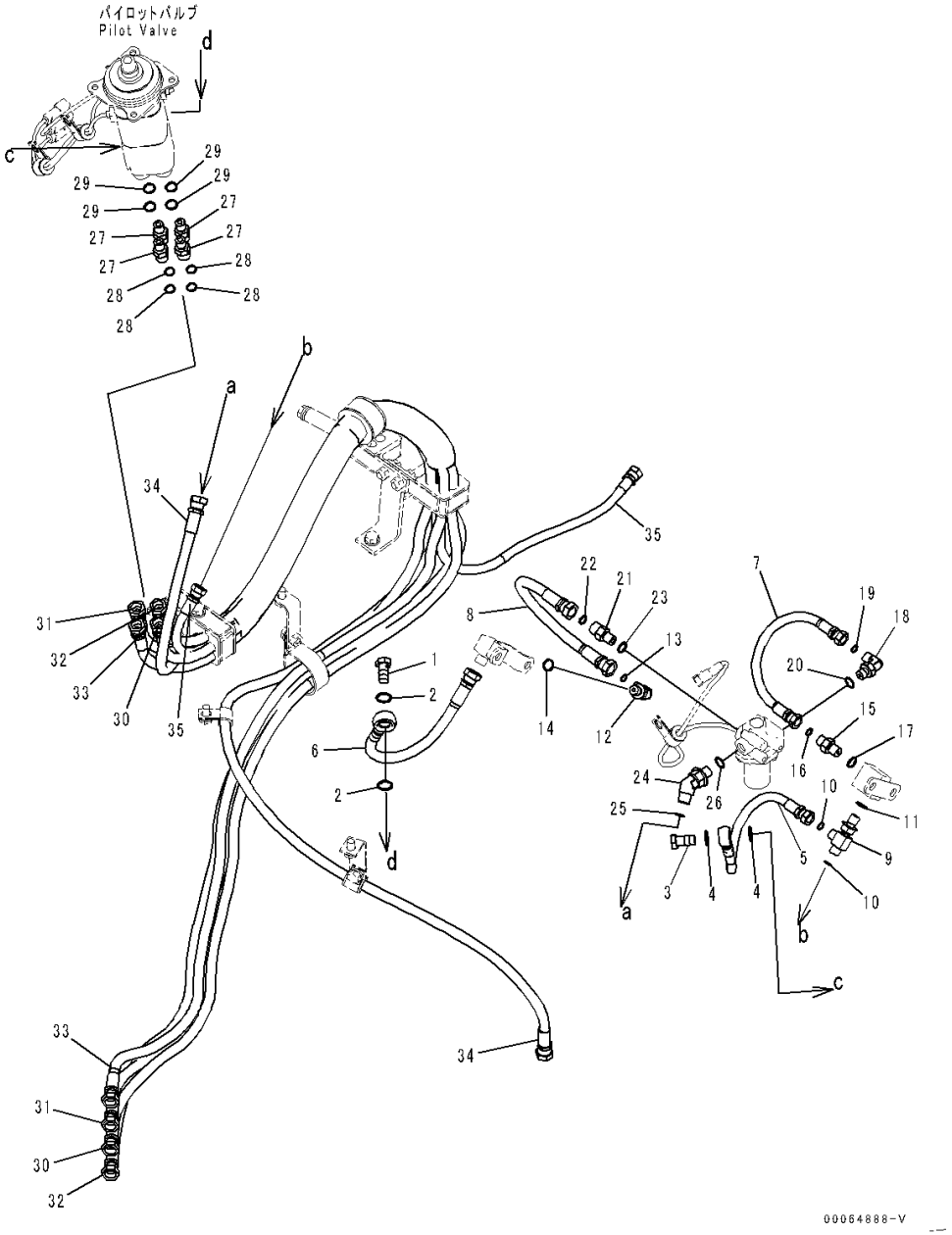

Index	Code	Part Number	Description	Qty	Serial Number
		21U-62-34760	• • Band, Red	2	90216-
		21U-62-34720	• • Band, Black	2	90216-
35		421-V91-4260	• Hose, Black	1	90216-
		21U-62-34720	• • Band, Black	2	90216-

FIG. K4202-022008 Loader Control Unit (With Multi-function Mono Lever) (PPC Piping) (2/3)

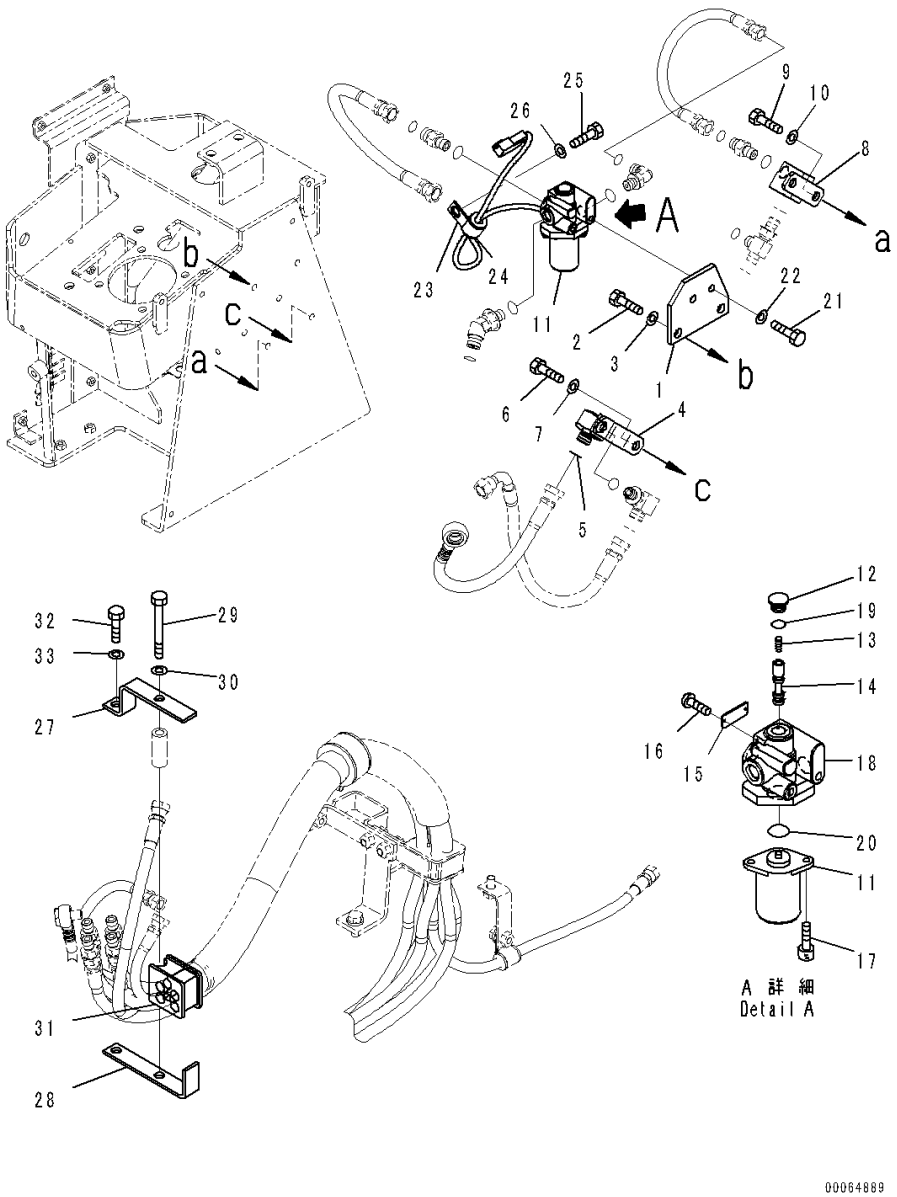

Index	Code	Part Number	Description	Qty	Serial Number
1		423-V91-4271	Plate	1	90216-
2		01010-81020	Bolt	2	90216-
3		01643-31032	Washer	2	90216-
4		423-V91-4250	Block	1	90216-
5		02896-11009	O-ring	1	90216-
6		01010-81020	Bolt	2	90216-
7		01643-31032	Washer	2	90216-
8		423-V91-4281	Block	1	90216-
9		01010-81020	Bolt	2	90216-
10		01643-31032	Washer	2	90216-
		20Y-60-32110	Valve Assembly	1	90216-
11		20Y-60-32121	• Solenoid Assembly	1	90216-
12		NY08000-02200	• Plug	1	90216-
13		NY06339-10200	• Spring	1	90216-
14		NY07493-10200	• Spool	1	90216-
15		NY09000-11400	• Plate	1	90216-
16		NY84110-00264	• Screw	2	90216-
17		NY81446-05010	• Bolt	2	90216-
18	C1		• Block	1	90216-
19		07000-12011	• O-ring	1	90216-
20		07000-12016	• O-ring	1	90216-
21		01010-80820	Bolt	2	90216-
22		01643-30823	Washer	2	90216-
23		04434-51712	Clip	1	90216-
24		07095-20211	Cushion	1	90216-
25		01010-81020	Bolt	1	90216-
26		01643-31032	Washer	1	90216-
27		423-43-48371	Plate	1	90216-
28		423-43-48382	Bracket	1	90216-
29		01010-81080	Bolt	1	90216-
30		01643-31032	Washer	1	90216-
31		423-43-48161	Cushion	1	90216-
32		01010-81030	Bolt	1	90216-
33		01643-31032	Washer	1	90216-

FIG. K4202-022009 Loader Control Unit (With Multi-function Mono Lever) (PPC Piping) (3/3)

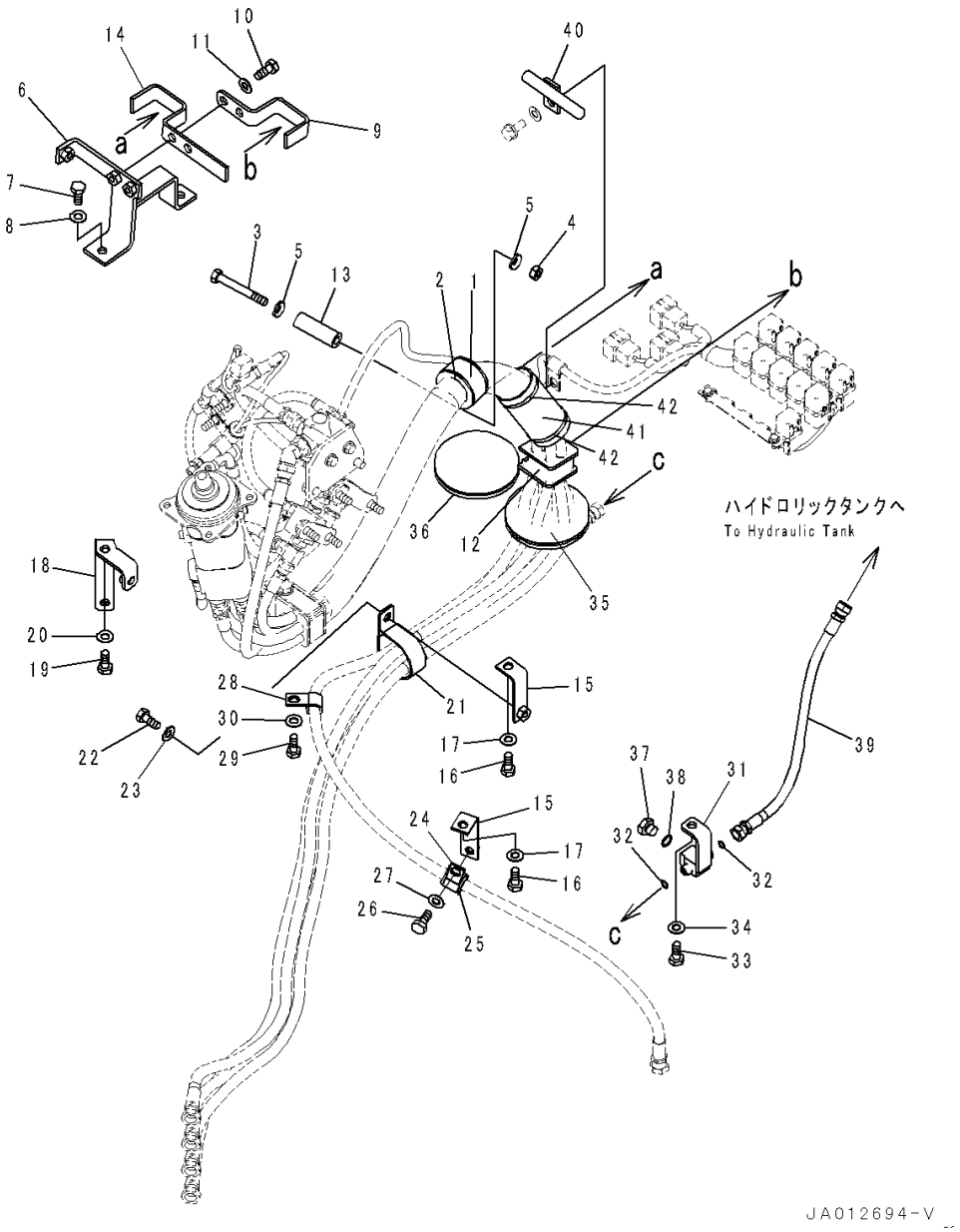

Index	Code	Part Number	Description	Qty	Serial Number
1		20Y-62-15960	Clip	1	90216-
2		423-43-48110	Rubber	1	90216-
3		01011-81000	Bolt	1	90216-
4		01580-11008	Nut	1	90216-
5		01643-31032	Washer	2	90216-
6		423-43-48460	Bracket	1	90216-
7		01010-81025	Bolt	2	90216-
8		01643-31032	Washer	2	90216-
9		423-43-48340	Plate	1	90216-
10		01010-81030	Bolt	2	90216-
11		01643-31032	Washer	2	90216-
12		423-43-48161	Cushion	1	90216-
13		561-43-43390	Spacer	1	90216-
14		423-877-4860	Plate	1	90216-
15		361-62-21111	Bracket	2	90216-
16		01010-81020	Bolt	2	90216-
17		01643-31032	Washer	2	90216-
18		423-43-48470	Bracket	1	90216-
19		01010-81020	Bolt	1	90216-
20		01643-31032	Washer	1	90216-
21		21K-03-11190	Clip	1	90216-
22		01010-81020	Bolt	1	90216-
23		01643-31032	Washer	1	90216-
24		04434-52112	Clip	1	90216-
25		07095-20314	Cushion	1	90216-
26		01010-81020	Bolt	1	90216-
27		01643-31032	Washer	1	90216-
28		04434-51510	Clip	1	90216-
29		01010-81020	Bolt	1	90216-
30		01643-31032	Washer	1	90216-
31		421-877-4150	Tee	1	90216-
32		02896-11008	O-ring	2	90216-
33		01010-81020	Bolt	1	90216-
34		01643-31032	Washer	1	90216-
35		423-43-38320	Grommet	1	90216-
36		423-43-38330	Grommet	1	90216-
37		07040-11409	Plug	1	90216-
38		07002-11423	O-ring	1	90216-
39		02760-00204	Hose, Face Seal Type	1	90216-
40		421-V91-4150	Guide	1	90216-

FIG. K4202-022009 Loader Control Unit (With Multi-function Mono Lever) (PPC Piping) (3/3)

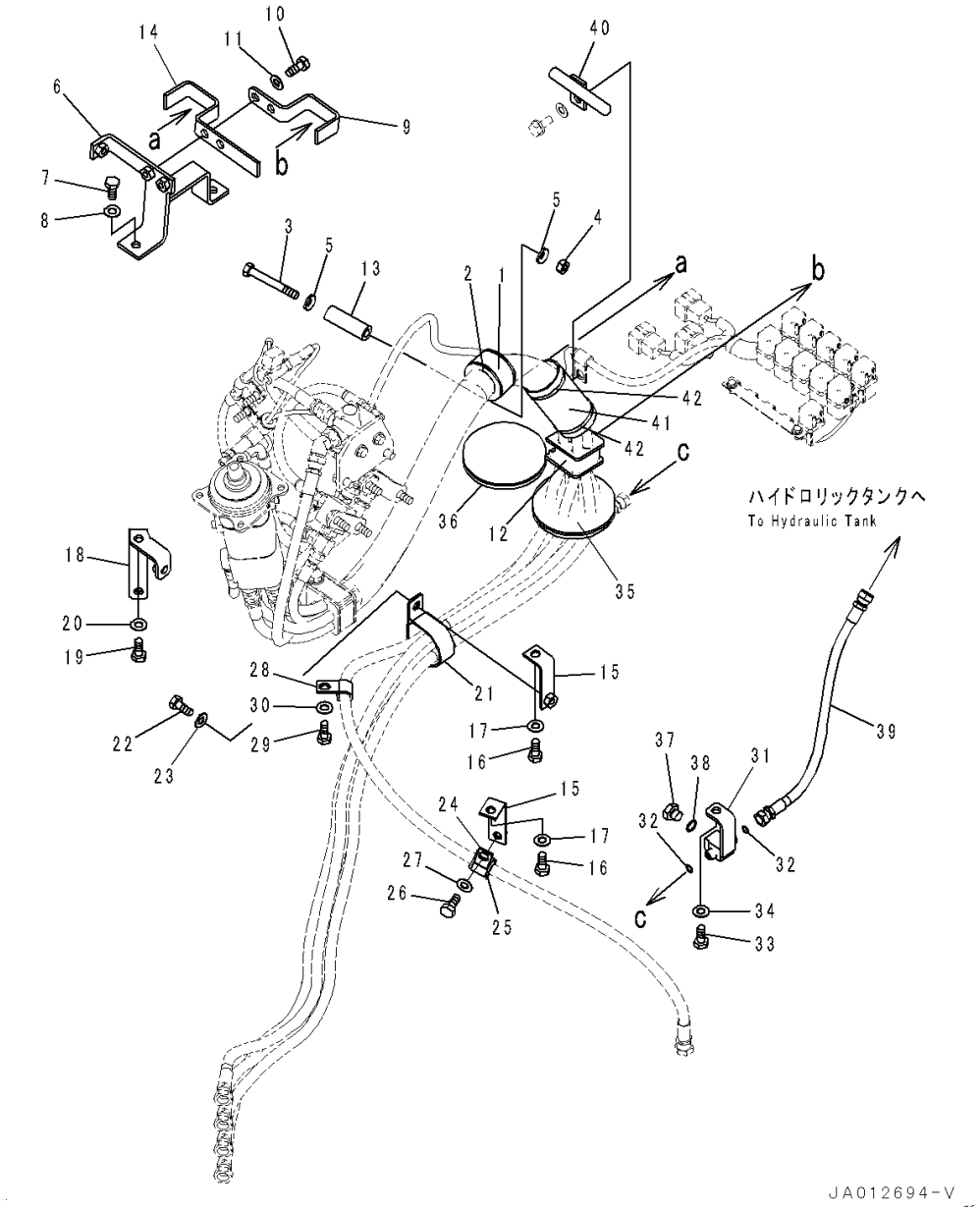

Index	Code	Part Number	Description	Qty	Serial Number
41		423-06-42740	Sheet	1	90216-
42		08034-20536	Band	2	90216-

FIG. K4202-022010 Loader Control Unit (Switch Box)

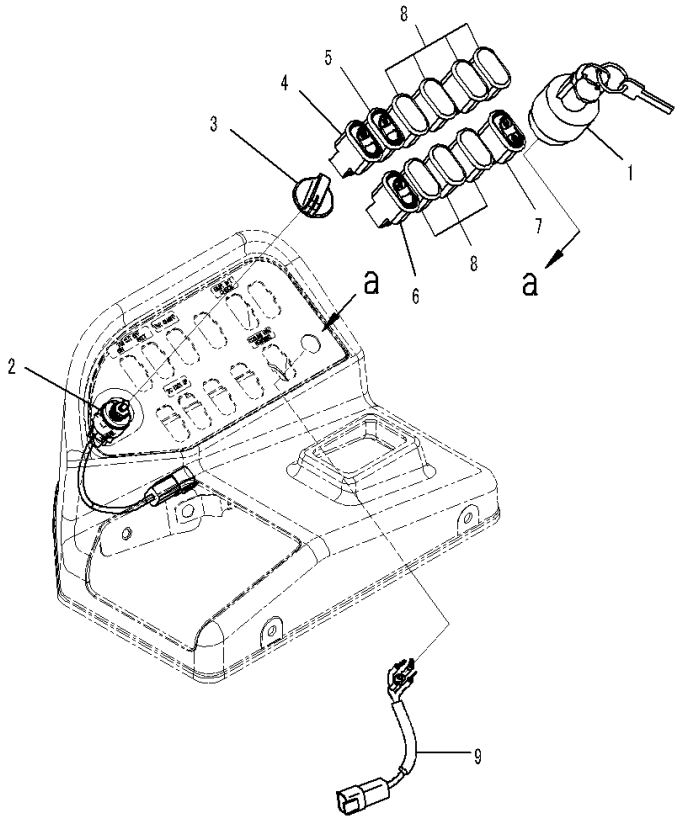

Index	Code	Part Number	Description	Qty	Serial Number
		Note: This list covers following specifications.			
		With Multi-function Mono Lever			
		With Multi-function Mono Lever and 1-lever Attachment Control			
		With 2-lever Loader Control			
		With 2-lever Loader Control, Forward Reverse Switch			
		With 2-lever Loader Control, Joystick Steering System			
		With 2-lever Loader Control and 1-lever Attachment Control			
		With 2-lever Loader Control and 1-lever Attachment Control, Forward Reverse Switch			
		With 2-lever Loader Control and 1-lever Attachment Control, Joystick Steering System			
1		08086-20100	Switch, Starting	1	90216-
2		426-06-36310	Switch, Shift Pattern	1	90216-
3		421-06-36241	Knob	1	90216-
4		423-06-45460	Switch, T/M Cut Off	1	90216-
5		423-06-45470	Switch, T/M Cut Off	1	90216-
6		423-06-45521	Switch, Power Mode	1	90216-
7		423-06-45550	Switch, Reverse Fan	1	90216-
8		20Y-06-42190	Cover	7	90216-
9		423-06-45170	Wiring Harness	1	90216-

FIG. K4202-025003A Loader Control Unit (With Multi-function Mono Lever and 1-lever Attachment Control) (Lever)

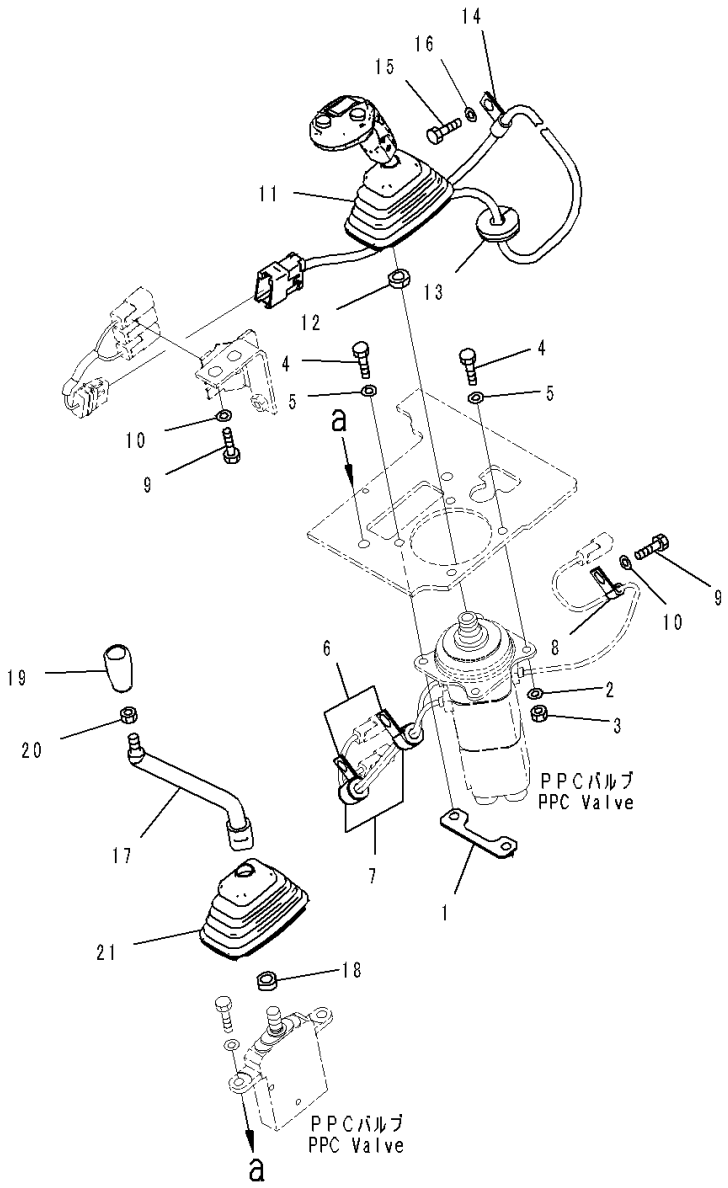

Index	Code	Part Number	Description	Qty	Serial Number
1		423-V91-4130	Plate	1	90216-
2		01643-30823	Washer	2	90216-
3		01580-10806	Nut	2	90216-
4		01010-80825	Bolt	4	90216-
5		01643-30823	Washer	4	90216-
6		04434-51712	Clip	2	90216-
7		07095-20211	Cushion	2	90216-
8		04434-50610	Clip	1	90216-
9		01010-81020	Bolt	3	90216-
10		01643-31032	Washer	3	90216-
11		423-V91-4144	Lever Assembly	1	90904-
12		23S-43-51240	Nut	1	90216-
13		135-06-34250	Grommet	1	90216-
14		04434-51012	Clip	1	90216-
15		01010-81020	Bolt	1	90216-
16		01643-31032	Washer	1	90216-
17		423-V91-4360	Lever	1	90216-
18		23S-43-51240	Nut	1	90216-
19		22T-43-13130	Knob	1	90216-
20		195-43-44220	Nut	1	90216-
21		421-43-28431	Boot	1	90216-

FIG. K4202-025004 Loader Control Unit (With Multi-function Mono Lever and 1-lever Attachment Control) (Inner Parts, PPC Valve) (2/2)

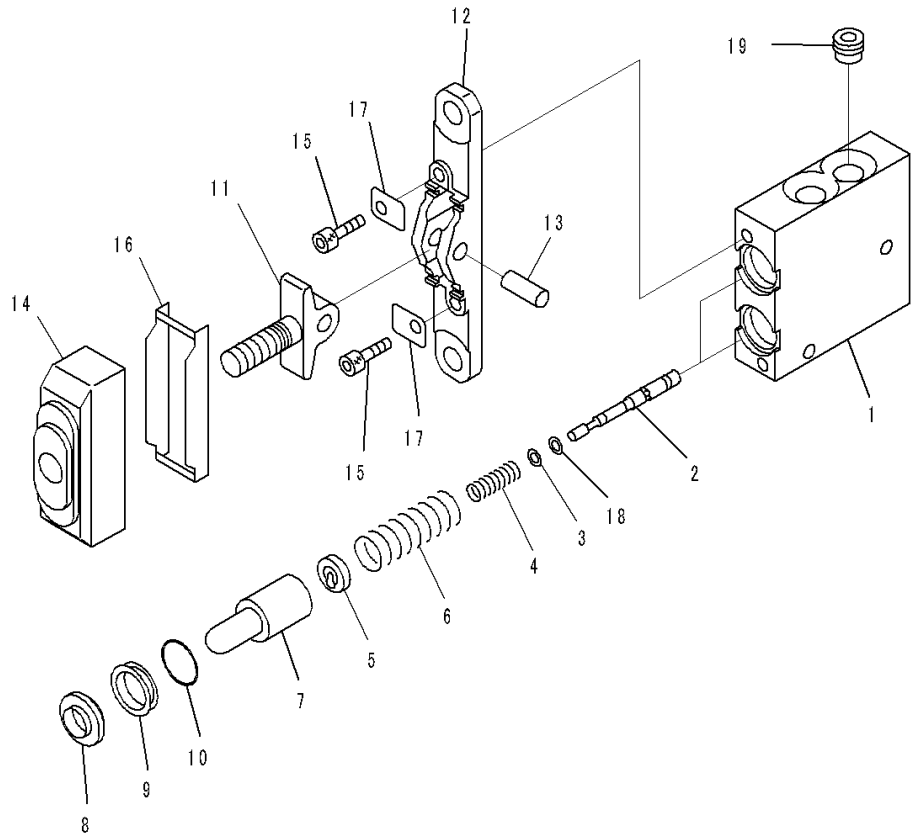

Index	Code	Part Number	Description	Qty	Serial Number
		702-16-03370	Valve, Pilot	1	90216-
1	C1		• Body	1	90216-
2	C1		• Valve	2	90216-
3	C1		• Shim, T=0.30mm	2	90216-
4		702-16-54550	• Spring	2	90216-
5		702-16-54571	• Retainer	2	90216-
6	C1		• Spring	2	90216-
7		702-16-53170	• Piston	2	90216-
8		702-16-57430	• Seal	2	90216-
9		702-16-54580	• Collar	2	90216-
10		702-16-54590	• O-ring	2	90216-
11		702-16-54610	• Lever	1	90216-
12	C1		• Plate	1	90216-
13		702-16-54630	• Shaft	1	90216-
14		702-16-54641	• Boot	1	90216-
15		01252-30625	• Bolt	2	90216-
16		702-16-54660	• Plate	1	90216-
17		702-16-54650	• Plate	2	90216-
18		702-16-54670	• Shim, T=0.20mm	4	90216-
19		702-16-54880	• Filter	1	90216-

FIG. K4202-025005 Loader Control Unit (With Multi-function Mono Lever and 1-lever Attachment Control) (PPC Valve Mounting)

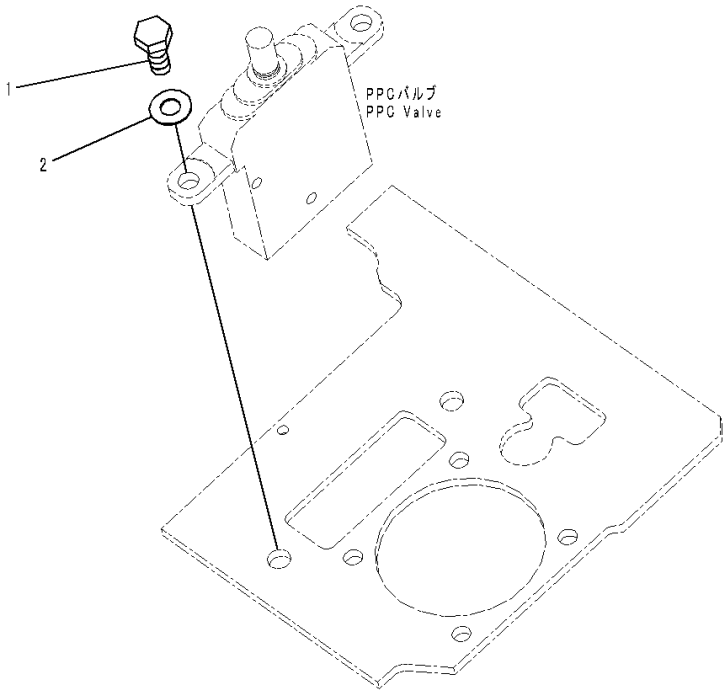

Index	Code	Part Number	Description	Qty	Serial Number
1		01010-81030	Bolt	2	90216-
2		01643-31032	Washer	2	90216-

FIG. K4202-025006 Loader Control Unit (With Multi-function Mono Lever and 1-lever Attachment Control) (Wiring Harness)

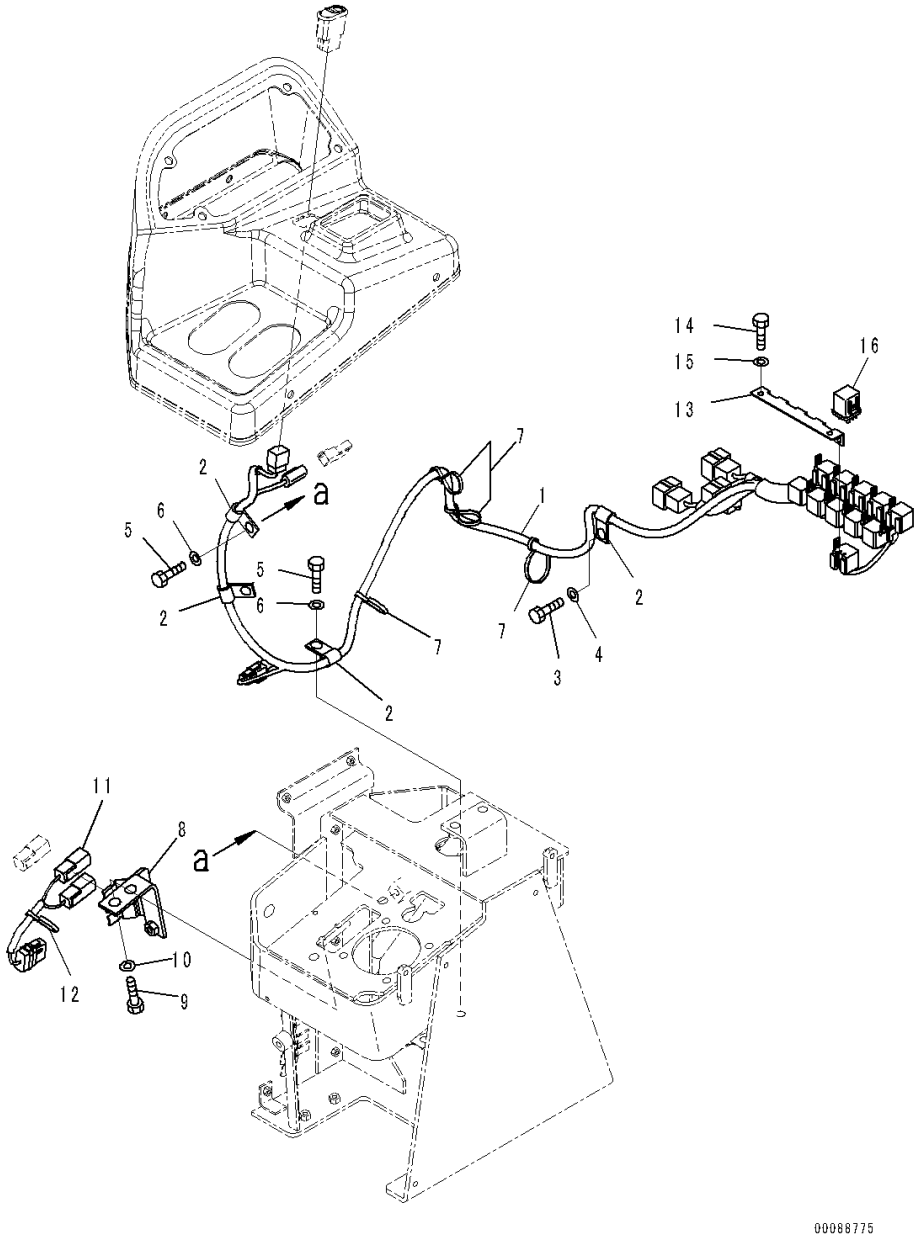

Index	Code	Part Number	Description	Qty	Serial Number
1		423-V91-4332	Wiring Harness	1	90216-
2		04434-51012	Clip	4	90216-
3		01010-81020	Bolt	1	90216-
4		01643-31032	Washer	1	90216-
5		01010-81025	Bolt	2	90216-
6		01643-31032	Washer	2	90216-
7		08034-40521	Band	4	90216-
8		423-V91-4551	Bracket	1	90216-
9		01010-81020	Bolt	2	90216-
10		01643-31032	Washer	2	90216-
11		423-V91-4561	Wiring Harness	1	90216-
12		08034-40521	Band	1	90216-
13		569-06-61180	Bracket	1	90216-
14		01010-80616	Bolt	2	90216-
15		01643-30623	Washer	2	90216-
16		569-06-61970	Relay	1	90216-

FIG. K4202-025007 Loader Control Unit (With Multi-function Mono Lever and 1-lever Attachment Control) (Cover)

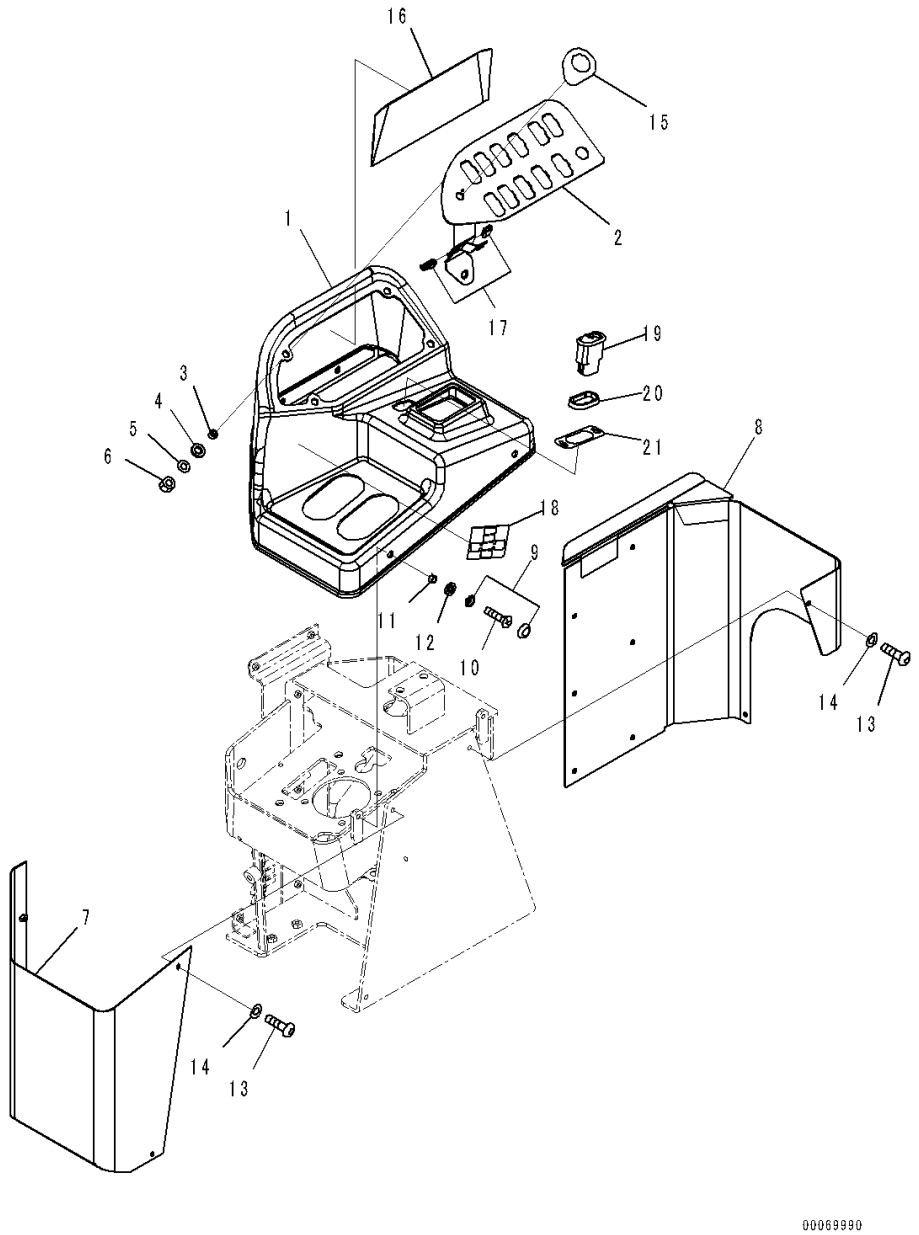

Index	Code	Part Number	Description	Qty	Serial Number
1		423-V91-4351	Cover	1	90216-
2		421-43-48210	Bracket	1	90216-
3		426-56-31890	Collar	4	90216-
4		426-56-31870	Washer	4	90216-
5		01643-30623	Washer	4	90216-
6		01580-10605	Nut	4	90216-
7		421-V91-4120	Cover	1	90216-
8		421-43-48170	Cover	1	90216-
9		421-09-31310	Cap Assembly	4	90216-
10		01224-40620	Screw, Philips Head	4	90216-
11		426-56-31890	Collar	4	90216-
12		426-56-31870	Washer	4	90216-
13		01245-00616	Screw	10	90216-
14		01643-70623	Washer	10	90216-
15		423-93-41190	Plate	1	90216-
16		423-06-42740	Sheet	1	90216-
17		423-06-42430	Finisher	2	90216-
18		421-V91-3140	Plate	1	90216-
19		426-06-33550	Switch	1	90216-
20		418-926-4530	Spacer	1	90216-
21		423-V91-4160	Plate	1	90216-

FIG. K4202-025009 Loader Control Unit (With Multi-function Mono Lever and 1-lever Attachment Control) (PPC Piping) (1/3)

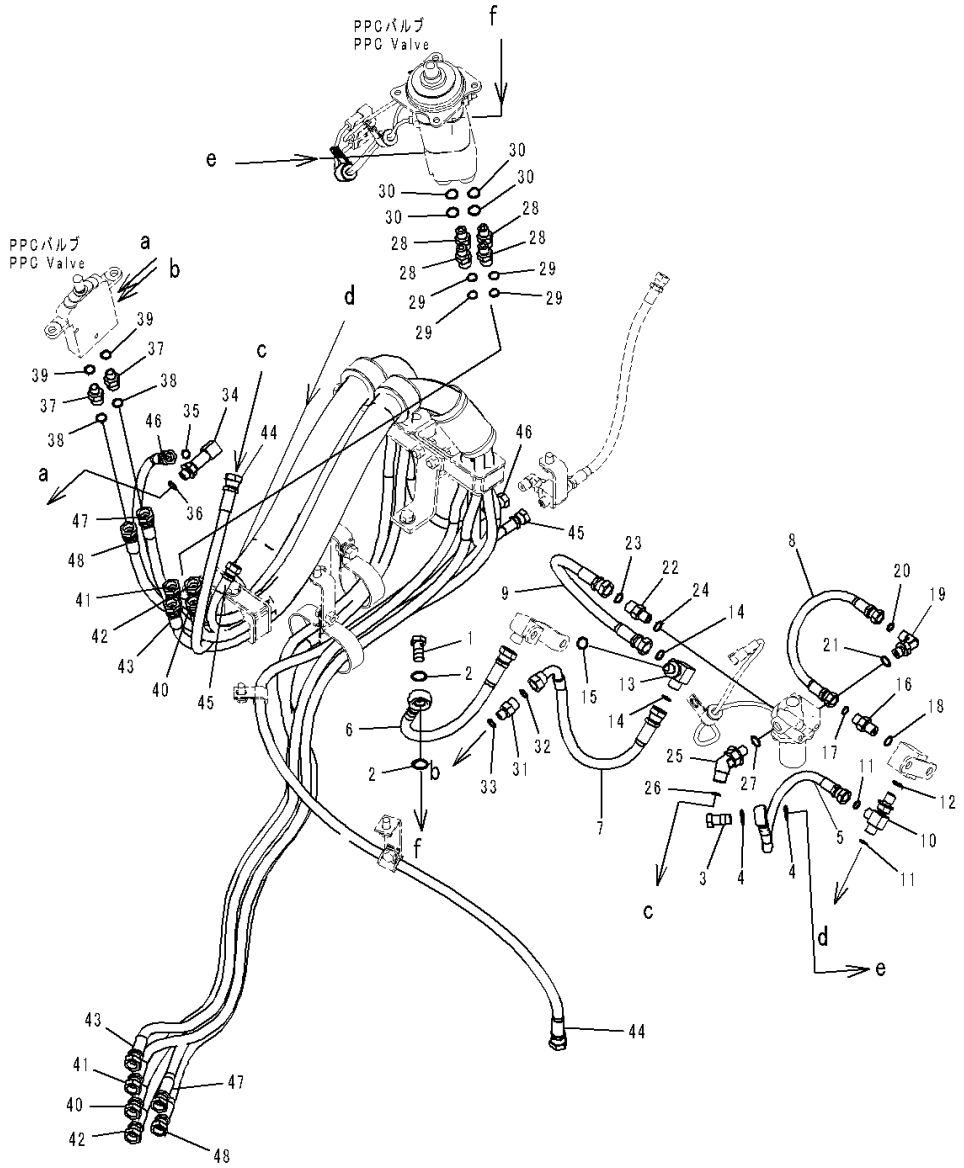

Index	Code	Part Number	Description	Qty	Serial Number
1		20Y-62-18910	Plug	1	90216-
2		07000-12018	O-ring	2	90216-
3		20Y-62-18890	Bolt, Joint	1	90216-
4		07000-12015	O-ring	2	90216-
5		423-V91-4411	Hose	1	90216-
		21U-62-34720	• Band, Black	2	90216-
6		423-S35-4431	Hose	1	90216-
7		423-V91-4610	Hose	1	90216-
8		02760-00203	Hose, Face Seal Type	1	90216-
9		02760-003A3	Hose, Face Seal Type	1	90216-
10		11Y-62-12330	Tee	1	90216-
11		02896-11008	O-ring	2	90216-
12		07002-11423	O-ring	1	90216-
13		21W-62-45140	Elbow	1	90216-
14		02896-11009	O-ring	2	90216-
15		07002-11423	O-ring	1	90216-
16		02781-0021D	Union	1	90216-
17		02896-11008	O-ring	1	90216-
18		07002-11423	O-ring	1	90216-
19		02782-10210	Elbow	1	90216-
20		02896-11008	O-ring	1	90216-
21		07002-11423	O-ring	1	90216-
22		02781-0031D	Nipple	1	90216-
23		02896-11009	O-ring	1	90216-
24		07002-11423	O-ring	1	90216-
25		11Y-62-12510	Elbow	1	90216-
26		02896-11009	O-ring	1	90216-
27		07002-11423	O-ring	1	90216-
28		02781-0031D	Nipple	4	90216-
29		02896-11009	O-ring	4	90216-
30		07002-11423	O-ring	4	90216-
31		11Y-62-12850	Union	1	90216-
32		02896-11009	O-ring	1	90216-
33		07000-12011	O-ring	1	90216-
34		21W-62-43990	Elbow	1	90216-
35		02896-11008	O-ring	1	90216-
36		07000-12011	O-ring	1	90216-
37		11Y-62-12850	Union	2	90216-
38		02896-11009	O-ring	2	90216-

FIG. K4202-025009 Loader Control Unit (With Multi-function Mono Lever and 1-lever Attachment Control) (PPC Piping) (1/3)

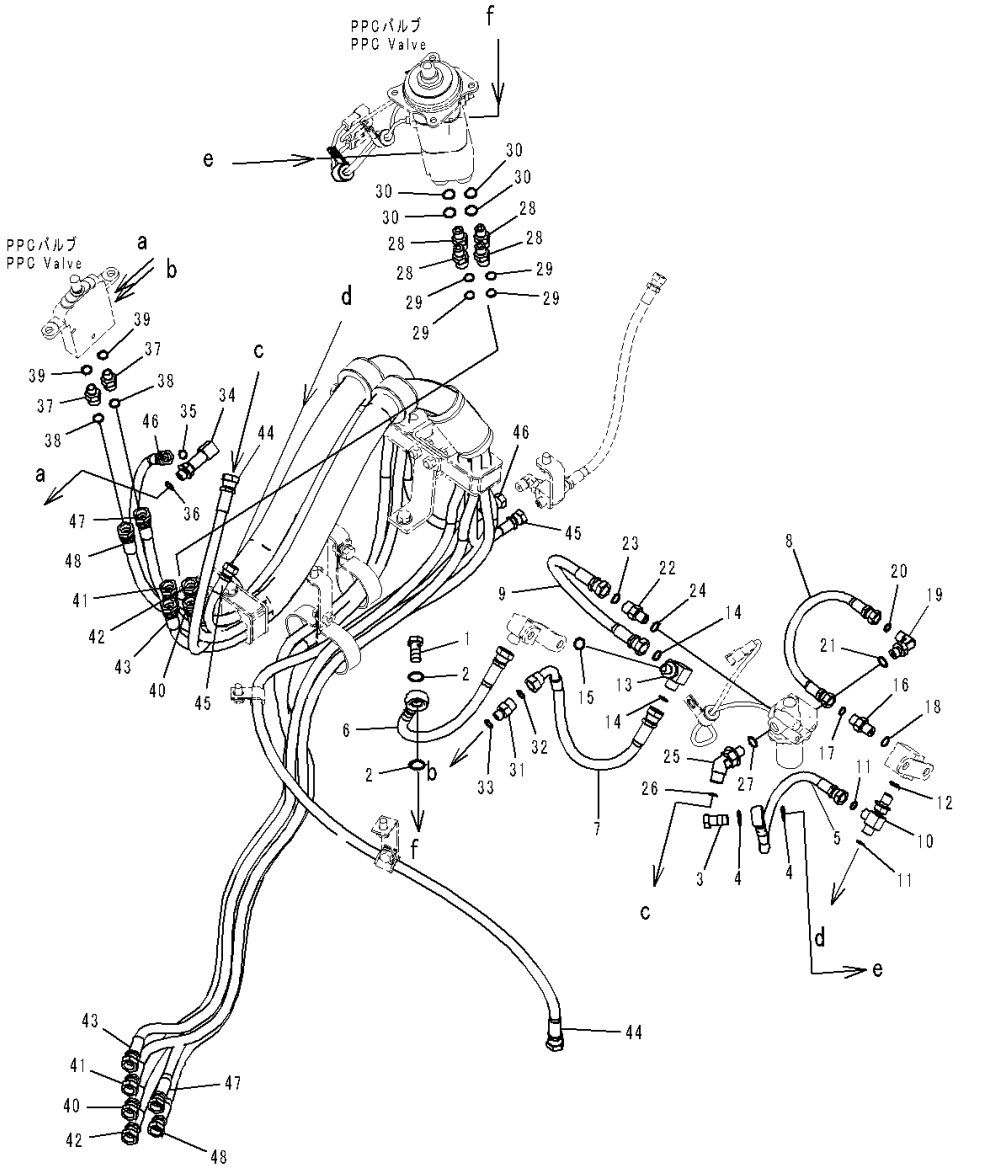

Index	Code	Part Number	Description	Qty	Serial Number
39		07000-12011	O-ring	2	90216-
		421-V91-4400	Hose Assembly	1	90216-
40		421-V91-4210	• Hose, Green	1	90216-
		21U-62-34730	• • Band, Green	2	90216-
41		423-V91-4421	• Hose	1	90216-
		21U-62-34750	• • Band, Blue	2	90216-
42		421-V91-4230	• Hose, White	1	90216-
		21U-62-34770	• • Band, White	2	90216-
43		423-V91-4441	• Hose	1	90216-
		21U-62-34710	• • Band, Yellow	2	90216-
44		421-V91-4410	• Hose, Black-Red	1	90216-
		21U-62-34760	• • Band, Red	2	90216-
		21U-62-34720	• • Band, Black	2	90216-
45		421-V91-4260	• Hose, Black	1	90216-
		21U-62-34720	• • Band, Black	2	90216-
		421-V91-4301	Hose Assembly	1	90216-
46		421-V91-4311	• Hose, Black	1	90216-
		21U-62-34720	• • Band, Black	2	90216-
47		423-V91-4381	• Hose	1	90216-
		21U-62-34770	• • Band, White	2	90216-
		21U-62-34730	• • Band, Green	2	90216-
48		423-V91-4391	• Hose	1	90216-
		21U-62-34770	• • Band, White	2	90216-
		21U-62-34750	• • Band, Blue	2	90216-

FIG. K4202-025010 Loader Control Unit (With Multi-function Mono Lever and 1-lever Attachment Control) (PPC Piping) (2/3)

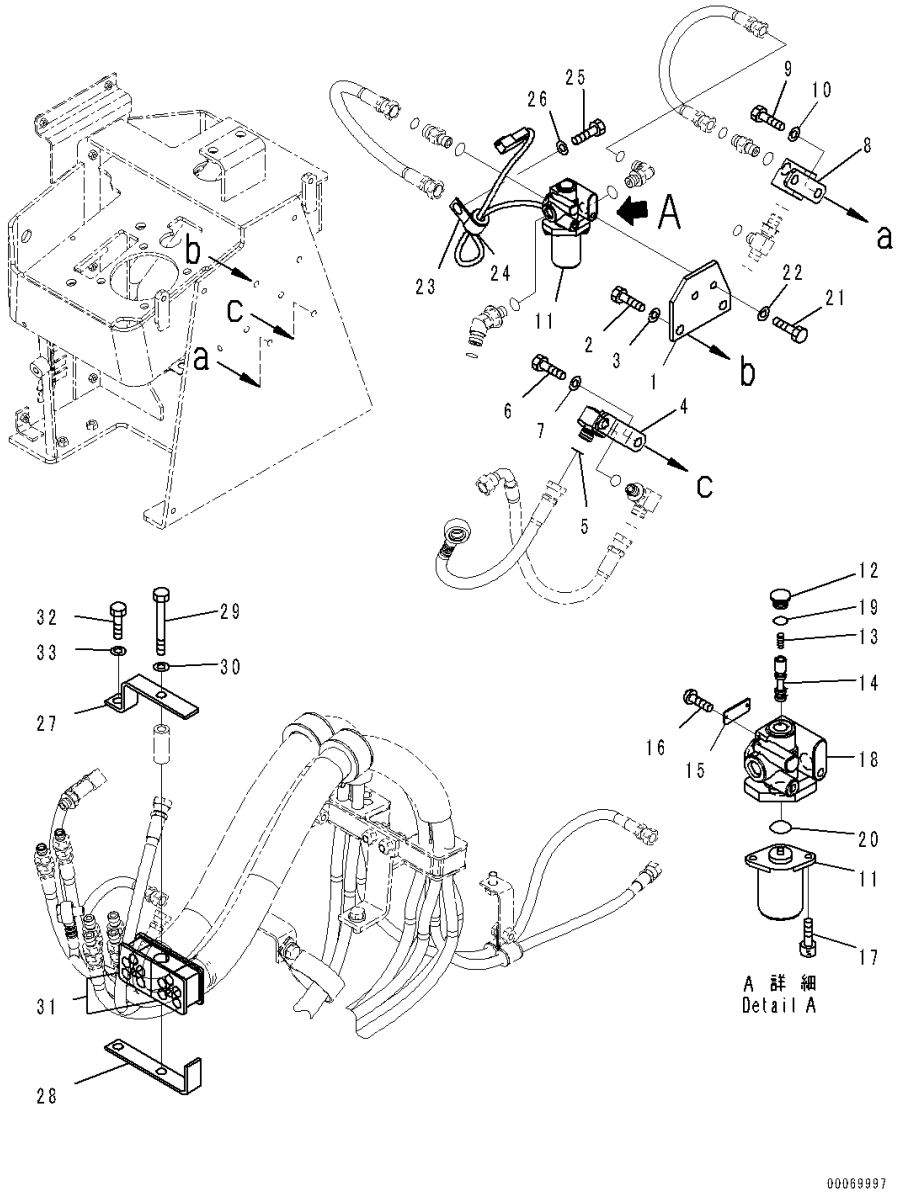

Index	Code	Part Number	Description	Qty	Serial Number
1		423-V91-4271	Plate	1	90216-
2		01010-81020	Bolt	2	90216-
3		01643-31032	Washer	2	90216-
4		423-V91-4250	Block	1	90216-
5		02896-11009	O-ring	1	90216-
6		01010-81020	Bolt	2	90216-
7		01643-31032	Washer	2	90216-
8		423-V91-4281	Block	1	90216-
9		01010-81020	Bolt	2	90216-
10		01643-31032	Washer	2	90216-
		20Y-60-32110	Valve Assembly	1	90216-
11		20Y-60-32121	• Solenoid Assembly	1	90216-
12		NY08000-02200	• Plug	1	90216-
13		NY06339-10200	• Spring	1	90216-
14		NY07493-10200	• Spool	1	90216-
15		NY09000-11400	• Plate	1	90216-
16		NY84110-00264	• Screw	2	90216-
17		NY81446-05010	• Bolt	2	90216-
18	C1		• Block	1	90216-
19		07000-12011	• O-ring	1	90216-
20		07000-12016	• O-ring	1	90216-
21		01010-80820	Bolt	2	90216-
22		01643-30823	Washer	2	90216-
23		04434-51712	Clip	1	90216-
24		07095-20211	Cushion	1	90216-
25		01010-81020	Bolt	1	90216-
26		01643-31032	Washer	1	90216-
27		423-43-48371	Plate	1	90216-
28		423-43-48382	Bracket	1	90216-
29		01010-81080	Bolt	1	90216-
30		01643-31032	Washer	1	90216-
31		423-43-48161	Cushion	2	90216-
32		01010-81030	Bolt	1	90216-
33		01643-31032	Washer	1	90216-

FIG. K4202-025011 Loader Control Unit (With Multi-function Mono Lever and 1-lever Attachment Control) (PPC Piping) (3/3)

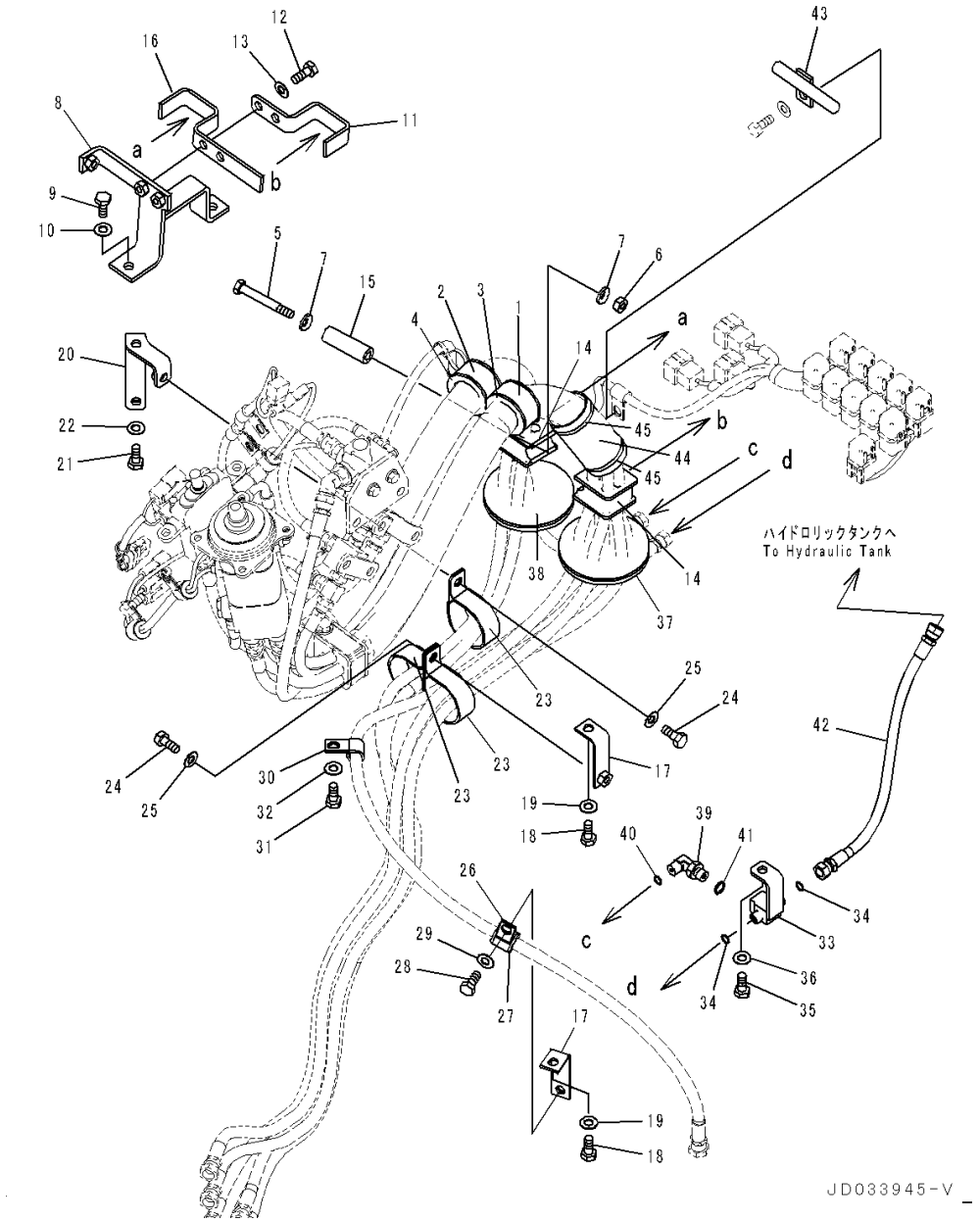

Index	Code	Part Number	Description	Qty	Serial Number
1		20Y-62-15960	Clip	1	90216-
2		419-09-11150	Clip	1	90216-
3		423-43-48110	Rubber	1	90216-
4		418-62-32180	Rubber	1	90216-
5		01011-81000	Bolt	1	90216-
6		01580-11008	Nut	1	90216-
7		01643-31032	Washer	2	90216-
8		423-43-48460	Bracket	1	90216-
9		01010-81025	Bolt	2	90216-
10		01643-31032	Washer	2	90216-
11		423-43-48340	Plate	1	90216-
12		01010-81030	Bolt	2	90216-
13		01643-31032	Washer	2	90216-
14		423-43-48161	Cushion	2	90216-
15		561-43-43390	Spacer	1	90216-
16		423-877-4860	Plate	1	90216-
17		361-62-21111	Bracket	2	90216-
18		01010-81020	Bolt	2	90216-
19		01643-31032	Washer	2	90216-
20		423-43-48470	Bracket	1	90216-
21		01010-81020	Bolt	1	90216-
22		01643-31032	Washer	1	90216-
23		21K-03-11190	Clip	3	90216-
24		01010-81020	Bolt	2	90216-
25		01643-31032	Washer	2	90216-
26		04434-52112	Clip	1	90216-
27		07095-20314	Cushion	1	90216-
28		01010-81020	Bolt	1	90216-
29		01643-31032	Washer	1	90216-
30		04434-51510	Clip	1	90216-
31		01010-81020	Bolt	1	90216-
32		01643-31032	Washer	1	90216-
33		421-877-4150	Tee	1	90216-
34		02896-11008	O-ring	2	90216-
35		01010-81020	Bolt	1	90216-
36		01643-31032	Washer	1	90216-
37		423-43-38320	Grommet	1	90216-
38		423-V91-4290	Grommet	1	90216-
39		02782-10210	Elbow	1	90216-

FIG. K4202-025011 Loader Control Unit (With Multi-function Mono Lever and 1-lever Attachment Control) (PPC Piping) (3/3)

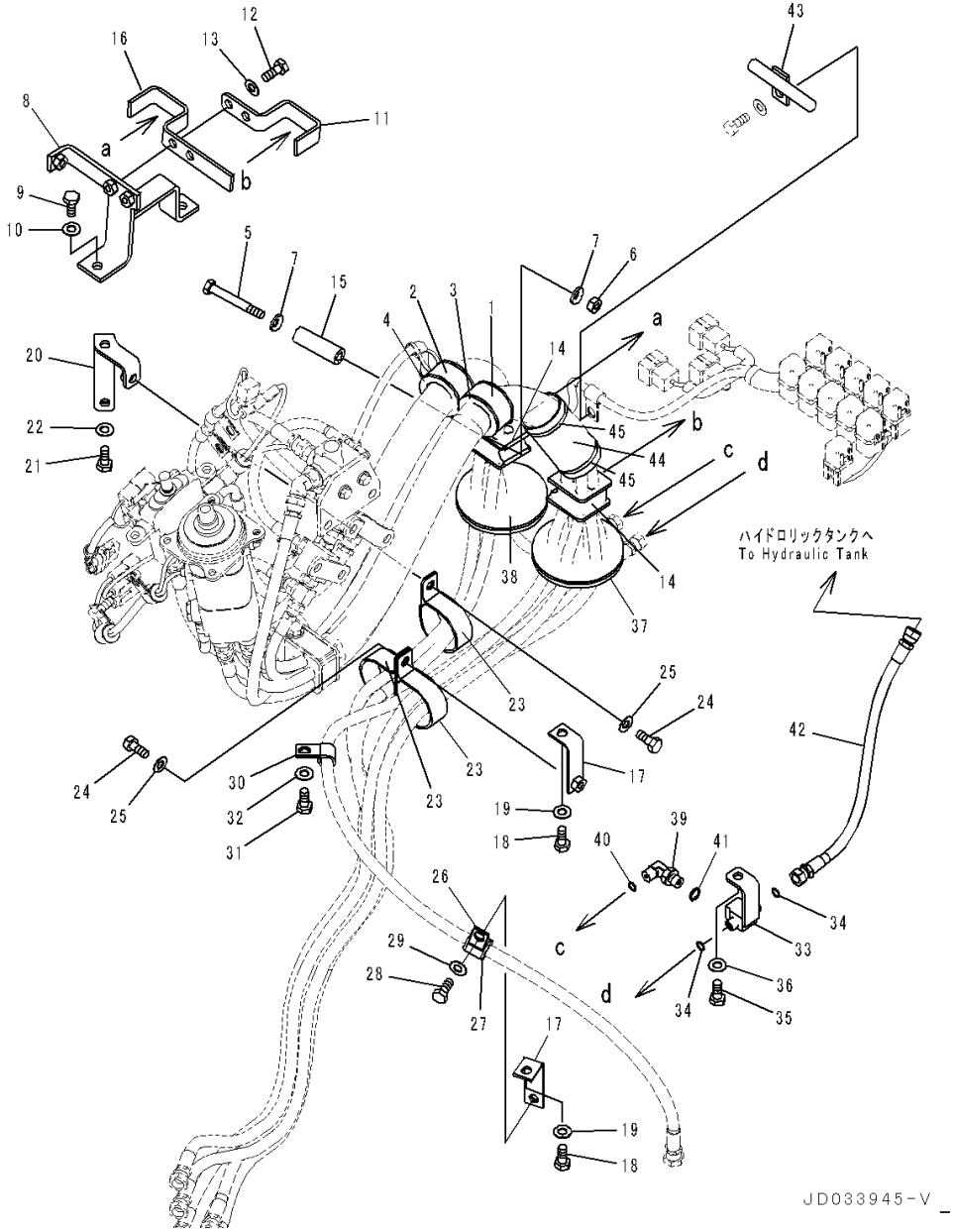

Index	Code	Part Number	Description	Qty	Serial Number
40		02896-11008	O-ring	1	90216-
41		07002-11423	O-ring	1	90216-
42		02760-00204	Hose, Face Seal Type	1	90216-
43		421-V91-4150	Guide	1	90216-
44		423-06-42740	Sheet	1	90216-
45		08034-20536	Band	2	90216-

FIG. K4202-015001 Loader Control Unit (Console Slider)

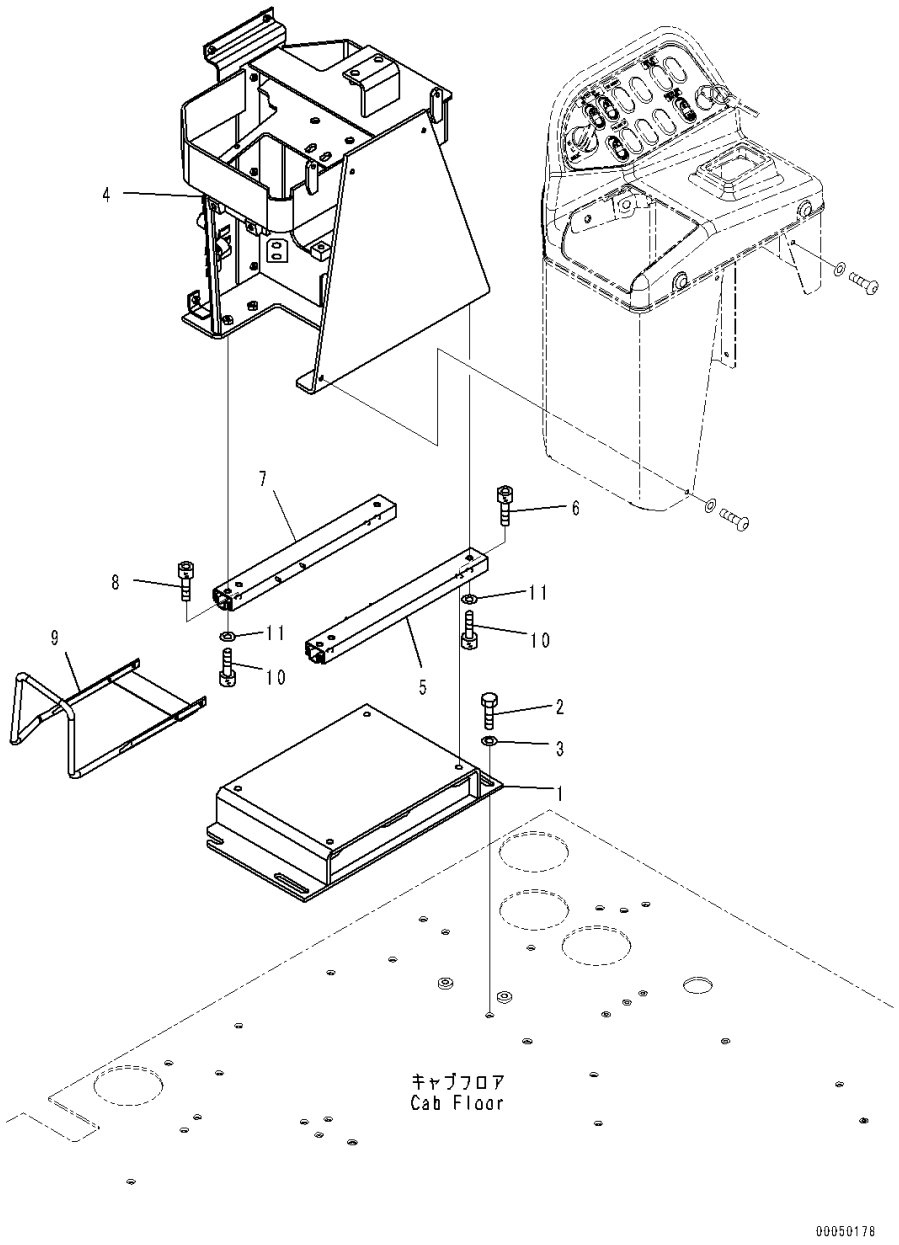

Index	Code	Part Number	Description	Qty	Serial Number
		Note: This list covers following specifications.			
		With 2-lever Loader Control			
		With 2-lever Loader Control, Forward Reverse Switch			
		With 2-lever Loader Control, Joystick Steering System			
1		421-43-49171	Bracket	1	90216-
2		01010-81025	Bolt	4	90216-
3		01643-31032	Washer	4	90216-
4		421-54-48510	Bracket	1	90216-
5		22M-43-21220	Adjuster, L.H.	1	90216-
6		01252-70820	Bolt	2	90216-
7		22M-43-21230	Adjuster, R.H.	1	90216-
8		01252-70820	Bolt	2	90216-
9		423-43-48281	Pipe	1	90216-
10		01252-70820	Bolt	6	90216-
11		01643-50823	Washer	6	90216-

FIG. K4202-015002 Loader Control Unit (Inner Parts, PPC Valve)

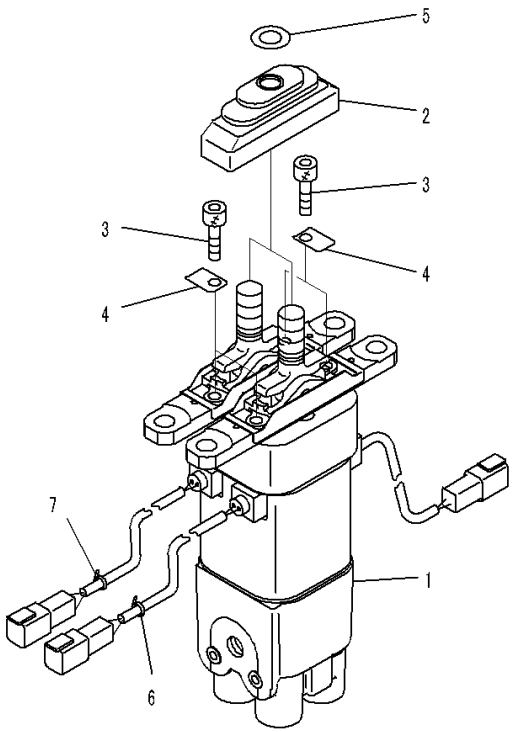

00040769

Index	Code	Part Number	Description	Qty	Serial Number
		Note: This list covers following specifications.			
		With 2-lever Loader Control			
		With 2-lever Loader Control, Forward Reverse Switch			
		With 2-lever Loader Control, Joystick Steering System			
		With 2-lever Loader Control and 1-lever Attachment Control			
		With 2-lever Loader Control and 1-lever Attachment Control, Forward Reverse Switch			
		With 2-lever Loader Control and 1-lever Attachment Control, Joystick Steering System			
1		702-16-06130	Valve, Pilot	1	90216-
2		702-16-54641	• Boot	2	90216-
3		01252-60625	• Bolt, Hexagon Socket Head	4	90216-
4		702-16-54650	• Plate	4	90216-
5		702-16-54920	• Ring	2	90216-
6		08034-00310	• Band, White	1	90216-
7		08034-20310	• Band, Black	1	90216-

FIG. K4202-015003 Loader Control Unit (Lever)

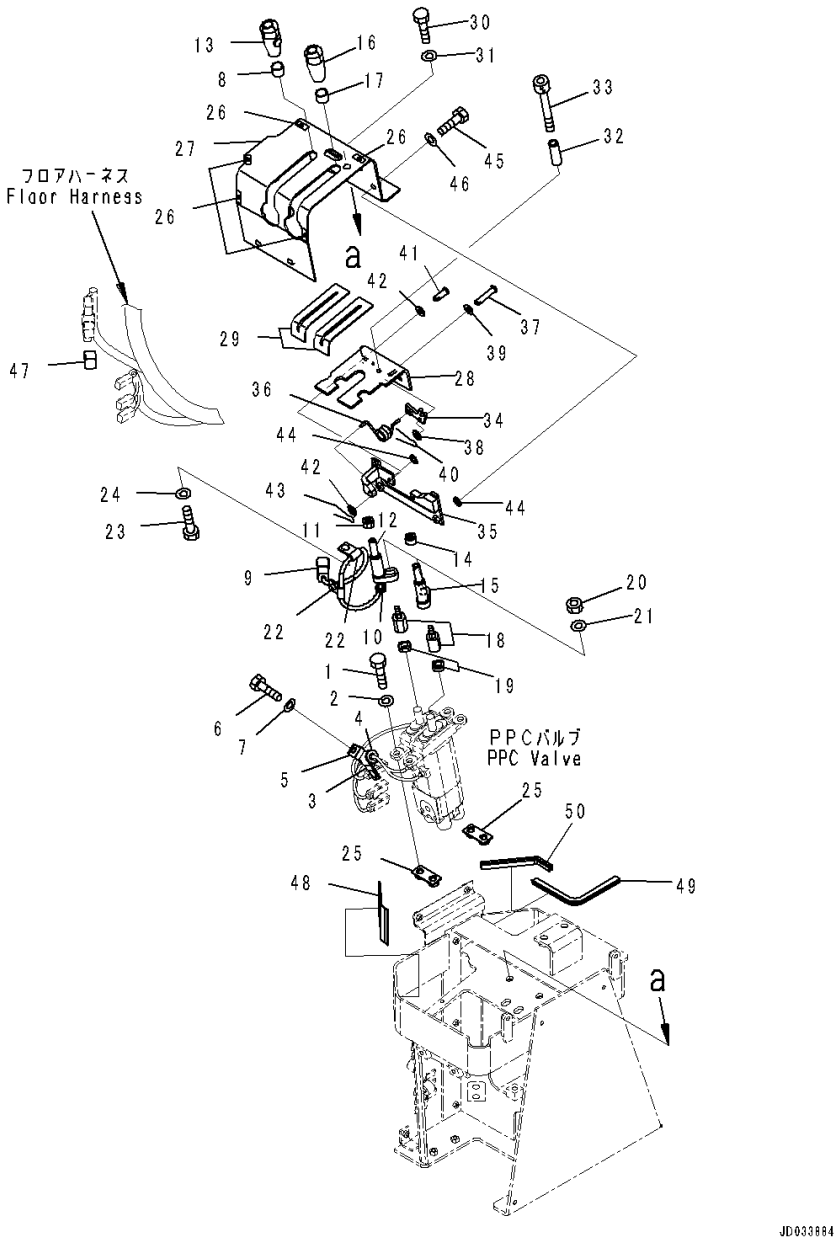

Index	Code	Part Number	Description	Qty	Serial Number
		Note: This list covers following specifications.			
		With 2-lever Loader Control			
		With 2-lever Loader Control, Joystick Steering System			
1		01010-81030	Bolt	4	90216-
2		01643-31032	Washer	4	90216-
3		04434-51712	Clip	1	90216-
4		07095-20211	Cushion	1	90216-
5		04434-50610	Clip	1	90216-
6		01010-81016	Bolt	2	90216-
7		01643-31032	Washer	2	90216-
		423-43-48243	Lever Assembly	1	91097-
8		421-43-38430	• Collar	1	90216-
9	C1		• Connector	1	90216-
10		23S-43-51230	• Grommet	1	90216-
11		23S-43-31550	• Nut	1	90216-
12		421-43-37591	• Lever	1	90216-
13		423-43-48261	• Knob Assembly	1	90216-
	C1		• • Body Assembly	1	90216-
	C1		• • Switch Assembly	1	90216-
		421-43-38523	• • Cap	1	90216-
		421-43-38530	• • Spacer	1	90216-
		421-43-38540	• • Spring	1	90216-
		421-43-38550	• • Cap	1	90216-
		421-43-38560	• • Ring	1	90216-
		421-43-38570	• • Plunger	1	90216-
		421-43-38580	• • O-ring	1	90216-
		421-43-38740	• • Stopper	1	90216-
		421-43-38142	Lever Assembly	1	90216-
14		23S-43-31550	• Nut	1	90216-
15		421-43-37591	• Lever	1	90216-
16		421-43-38332	• Knob	1	90216-
17		421-43-38430	• Collar	1	90216-
18		23S-43-51111	Lever	2	90216-
19		23S-43-51240	Nut	2	90216-
20		01580-10806	Nut	2	90216-
21		01643-50823	Washer	2	90216-
22		04434-50610	Clip	2	90216-
23		01010-80816	Bolt	2	90216-
24		01643-30823	Washer	2	90216-
25		423-43-48440	Bracket	2	90216-

FIG. K4202-015003 Loader Control Unit (Lever)

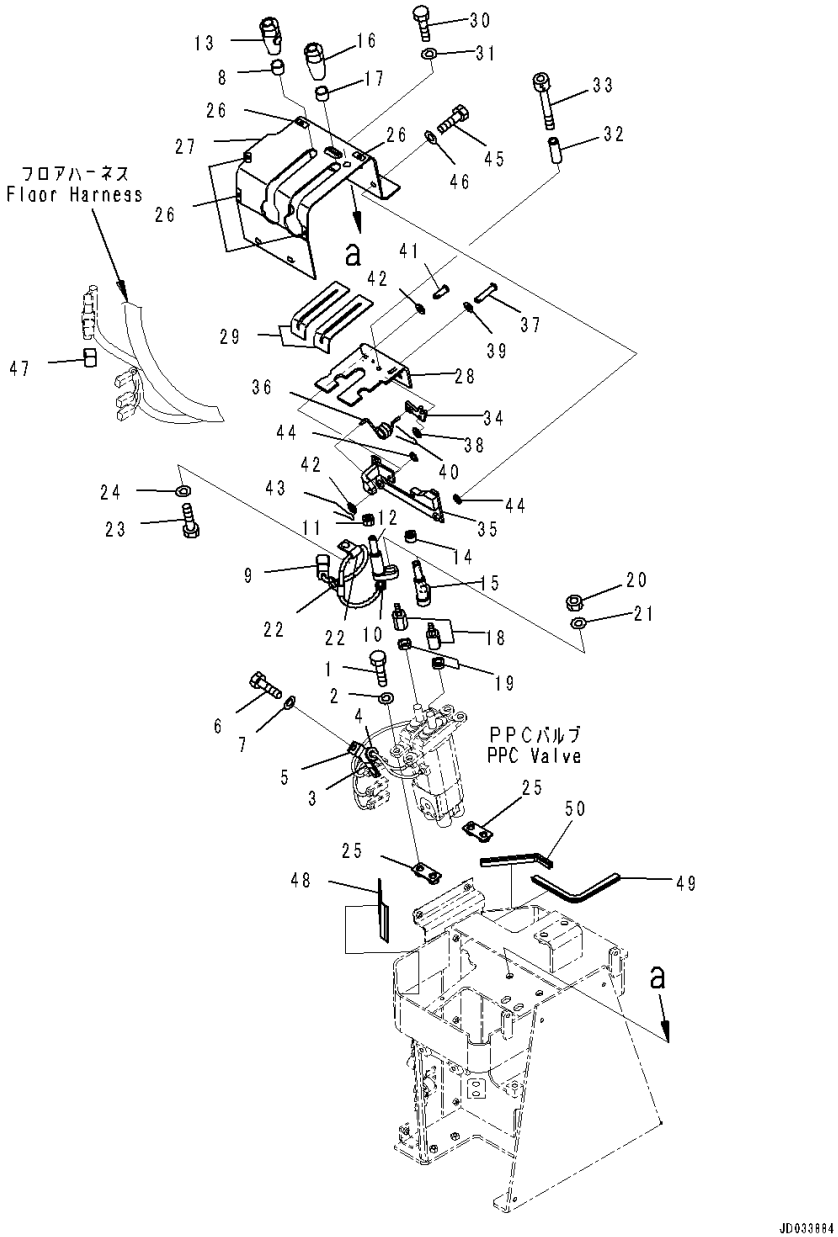

Index	Code	Part Number	Description	Qty	Serial Number
26		421-09-21420	Sheet	5	90216-
27		421-43-48190	Cover	1	90216-
28		423-43-48193	Plate	1	90216-
29		423-43-48720	Awning	4	90216-
30		01010-81030	Bolt	4	90216-
31		01643-31032	Washer	4	90216-
32		423-43-48130	Pipe	1	90216-
33		01252-70650	Bolt	1	90216-
34		423-43-48452	Plate	1	90216-
35		423-43-48231	Bracket	1	90216-
36		423-43-48430	Spring	1	90216-
37		04205-10630	Pin	1	90216-
38		01643-30623	Washer	1	90216-
39		01640-20610	Washer	1	90216-
40		04050-11612	Pin, Cotter	1	90216-
41		04205-10618	Pin	1	90216-
42		01640-20610	Washer	2	90216-
43		04050-11612	Pin, Cotter	1	90216-
44		425-15-14240	Shim, T=0.5mm	2	90216-
45		01010-80820	Bolt	2	90216-
46		01643-30823	Washer	2	90216-
47		423-06-45620	Connector	1	90216-
48		421-06-42740	Sheet	1	90216-
49		423-54-42990	Finisher	1	90216-
50		423-06-42420	Finisher	1	90216-

FIG. K4202-015004 Loader Control Unit (Cover)

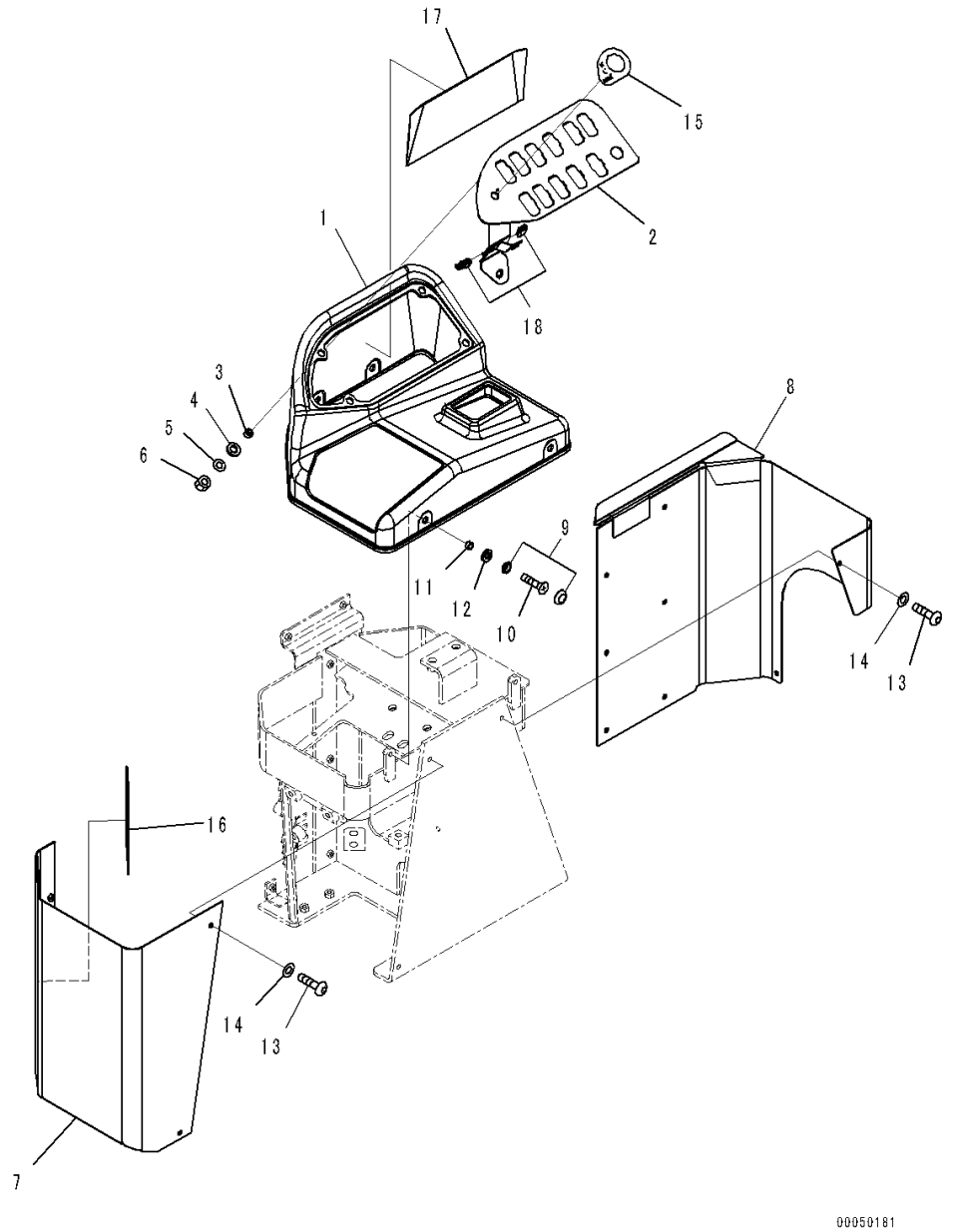

Index	Code	Part Number	Description	Qty	Serial Number
		Note: This list covers following specifications.			
		With 2-lever Loader Control			
		With 2-lever Loader Control, Forward Reverse Switch			
		With 2-lever Loader Control, Joystick Steering System			
		With 2-lever Loader Control and 1-lever Attachment Control			
		With 2-lever Loader Control and 1-lever Attachment Control, Forward Reverse Switch			
		With 2-lever Loader Control and 1-lever Attachment Control, Joystick Steering System			
1		423-43-48310	Cover	1	90216-
2		421-43-48210	Bracket	1	90216-
3		426-56-31890	Collar	4	90216-
4		426-56-31870	Washer	4	90216-
5		01643-30623	Washer	4	90216-
6		01580-10605	Nut	4	90216-
7		421-43-48160	Cover	1	90216-
8		421-43-48170	Cover	1	90216-
9		421-09-31310	Cap Assembly	4	90216-
10		01224-40620	Screw, Philips Head	4	90216-
11		426-56-31890	Collar	4	90216-
12		426-56-31870	Washer	4	90216-
13		01245-00616	Screw	10	90216-
14		01643-70623	Washer	10	90216-
15		423-93-41190	Plate	1	90216-
16		421-06-42750	Sheet	1	90216-
17		423-06-42740	Sheet	1	90216-
18		423-06-42430	Finisher	2	90216-

FIG. K4202-015005 Loader Control Unit (Armrest)

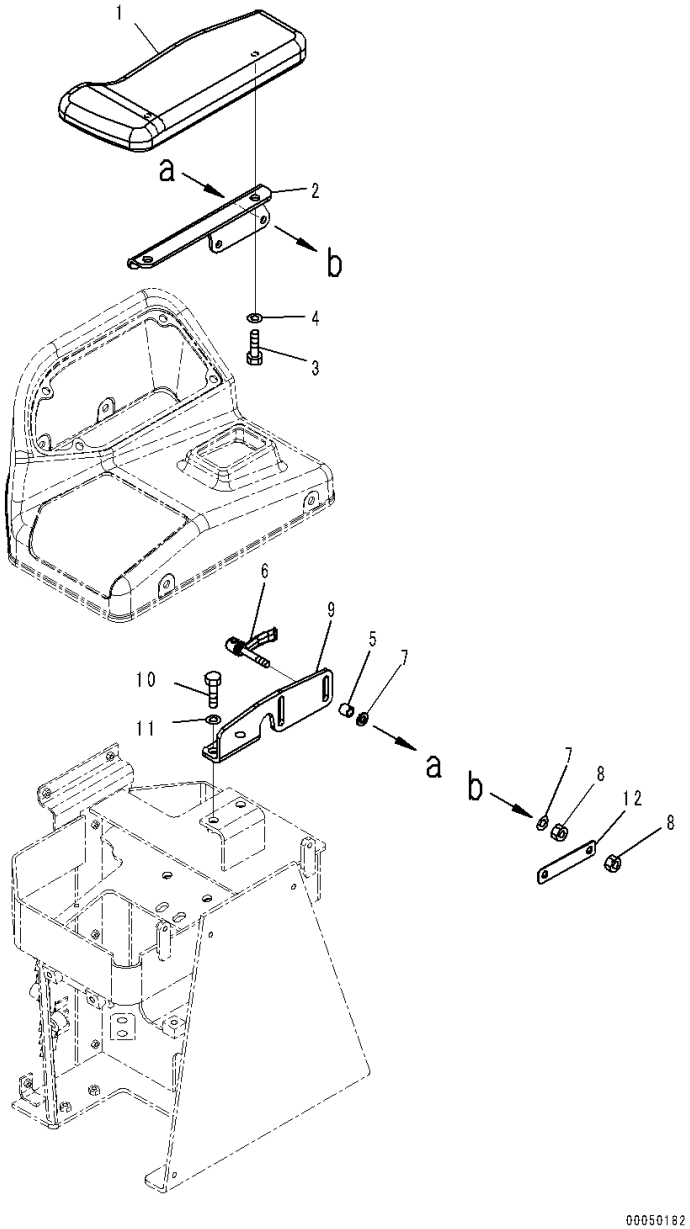

Index	Code	Part Number	Description	Qty	Serial Number
		Note: This list covers following specifications.			
		With 2-lever Loader Control			
		With 2-lever Loader Control, Forward Reverse Switch			
		With 2-lever Loader Control, Joystick Steering System			
		With 2-lever Loader Control and 1-lever Attachment Control			
		With 2-lever Loader Control and 1-lever Attachment Control, Forward Reverse Switch			
		With 2-lever Loader Control and 1-lever Attachment Control, Joystick Steering System			
1		423-43-48321	Arm Rest	1	90216-
2		423-43-48420	Bracket	1	90216-
3		01010-81016	Bolt	2	90216-
4		01643-31032	Washer	2	90216-
5		423-43-38160	Pipe	2	90216-
6		423-43-38170	Lever	2	90216-
7		01643-30823	Washer	4	90216-
8		01580-10806	Nut	4	90216-
9		423-43-48410	Bracket	1	90216-
10		01010-81025	Bolt	2	90216-
11		01643-31032	Washer	2	90216-
12		425-43-31141	Plate	1	90216-

FIG. K4202-015006 Loader Control Unit (PPC Piping) (1/2)

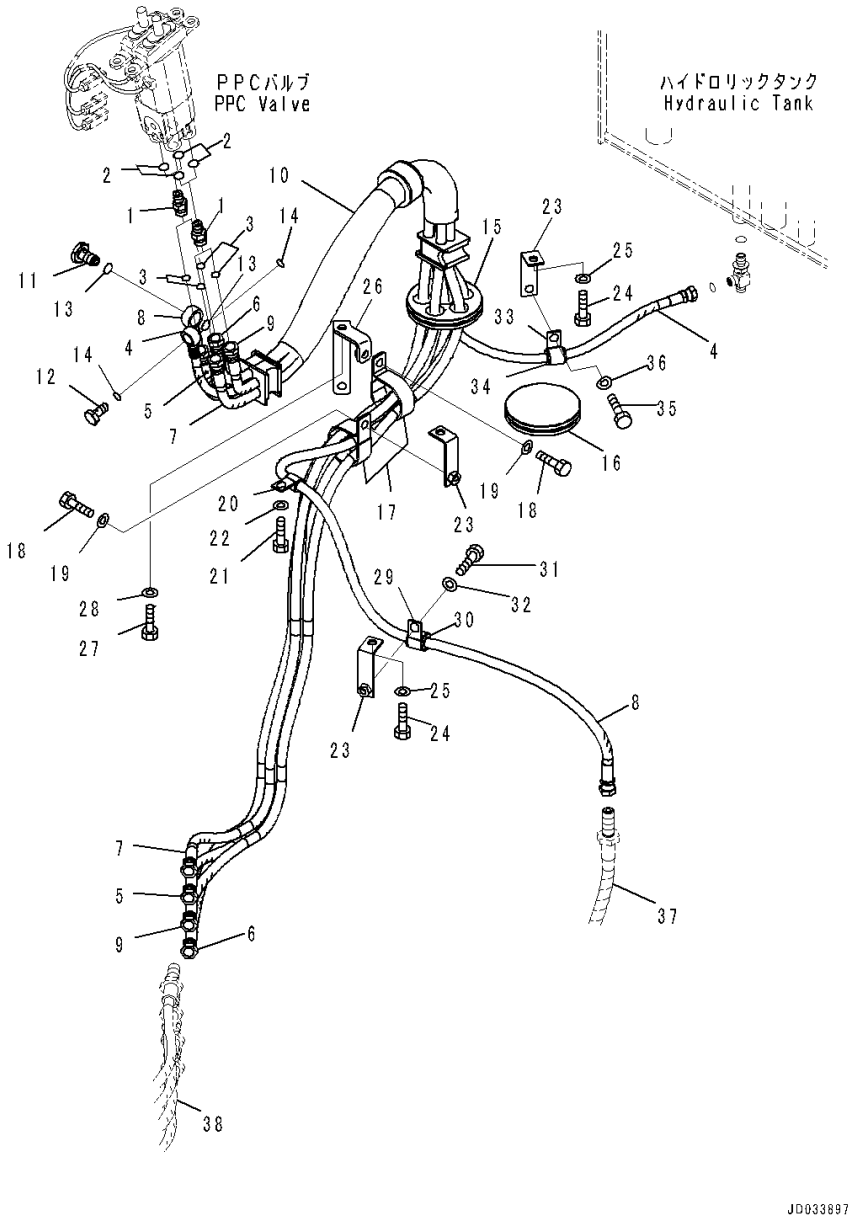

Index	Code	Part Number	Description	Qty	Serial Number
		Note: This list covers following specifications.			
		With 2-lever Loader Control			
		With 2-lever Loader Control, Forward Reverse Switch			
1		02781-0031D	Nipple	4	90216-
2		07002-11423	O-ring	4	90216-
3		02896-11009	O-ring	4	90216-
		421-43-48232	Hose Assembly	1	90921-
4		421-43-48110	• Hose, Black	1	90216-
		21U-62-34720	• • Band, Black	2	90216-
5		421-43-48130	• Hose, Yellow	1	90216-
		21U-62-34710	• • Band, Yellow	2	90216-
6		421-43-48140	• Hose, White	1	90216-
		21U-62-34770	• • Band, White	2	90216-
7		421-43-48150	• Hose, Blue	1	90216-
		21U-62-34750	• • Band, Blue	2	90216-
8		421-43-47830	• Hose, Black-Red	1	90216-
		21U-62-34760	• • Band, Red	2	90216-
		21U-62-34720	• • Band, Black	2	90216-
9		423-43-48512	• Hose, Green	1	90921-
		21U-62-34730	• Band, Green	2	90216-
10		08210-02911	• Tube, Spiral	1	90216-
11		20Y-62-18910	Plug	1	90216-
12		20Y-62-18890	Bolt, Joint	1	90216-
13		07000-12018	O-ring	2	90216-
14		07000-12015	O-ring	2	90216-
15		423-43-38320	Grommet	1	90216-
16		423-43-38330	Grommet	1	90216-
17		21K-03-11190	Clip	2	90216-
18		01010-81020	Bolt	2	90216-
19		01643-31032	Washer	2	90216-
20		04434-51510	Clip	1	90216-
21		01010-81020	Bolt	1	90216-
22		01643-31032	Washer	1	90216-
23		361-62-21111	Bracket	3	90216-
24		01010-81020	Bolt	3	90216-
25		01643-31032	Washer	3	90216-
26		423-43-48470	Bracket	1	90216-
27		01010-81020	Bolt	1	90216-
28		01643-31032	Washer	1	90216-
29		04434-52112	Clip	1	90216-

FIG. K4202-015006 Loader Control Unit (PPC Piping) (1/2)

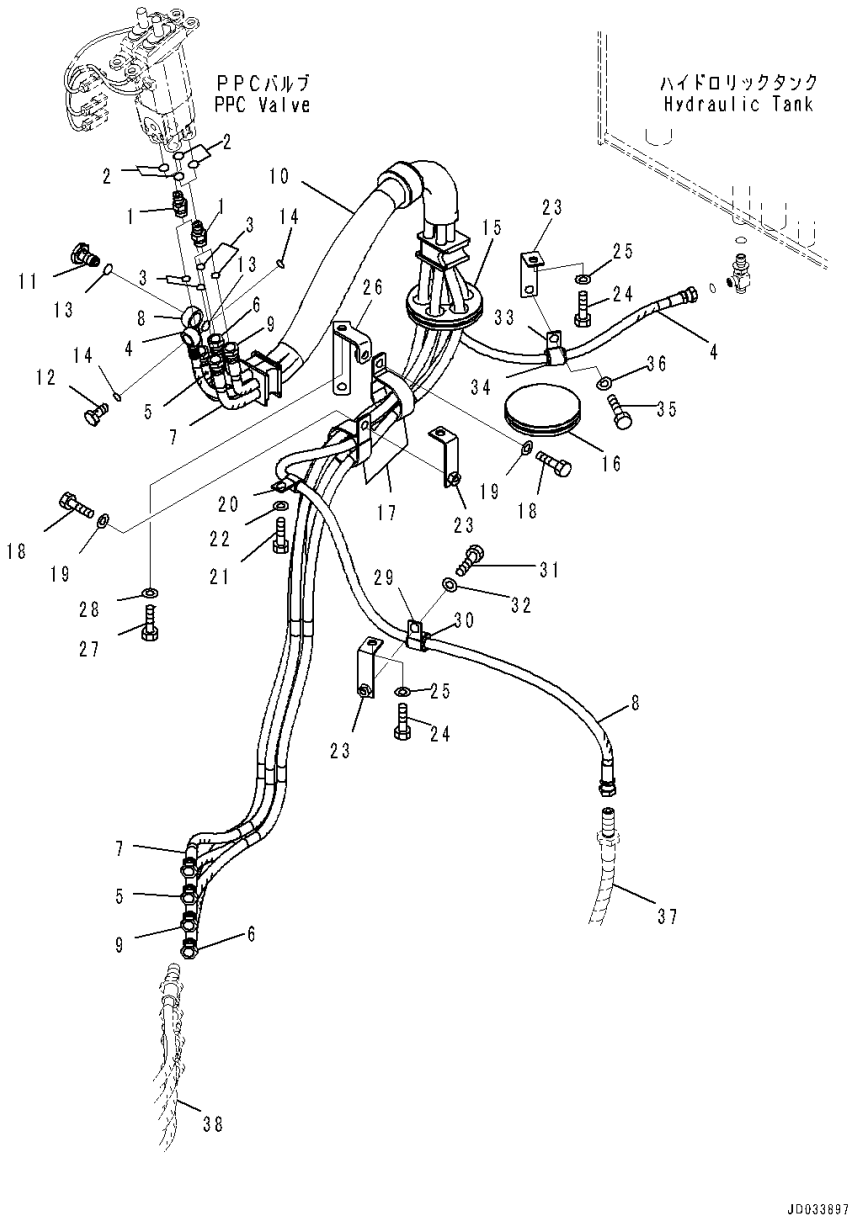

Index	Code	Part Number	Description	Qty	Serial Number
30		07095-20314	Cushion	1	90216-
31		01010-81020	Bolt	1	90216-
32		01643-31032	Washer	1	90216-
33		04434-51712	Clip	1	90216-
34		07095-20211	Cushion	1	90216-
35		01010-81020	Bolt	1	90216-
36		01643-31032	Washer	1	90216-
37		(421-43-47820)	Hose(Refer to Page 697)		-
38		(421-62-43370)	Hose(Refer to Page 444)		-
		(421-62-43370)	Hose(Refer to Page 457)		-

FIG. K4202-015007 Loader Control Unit (PPC Piping) (2/2)

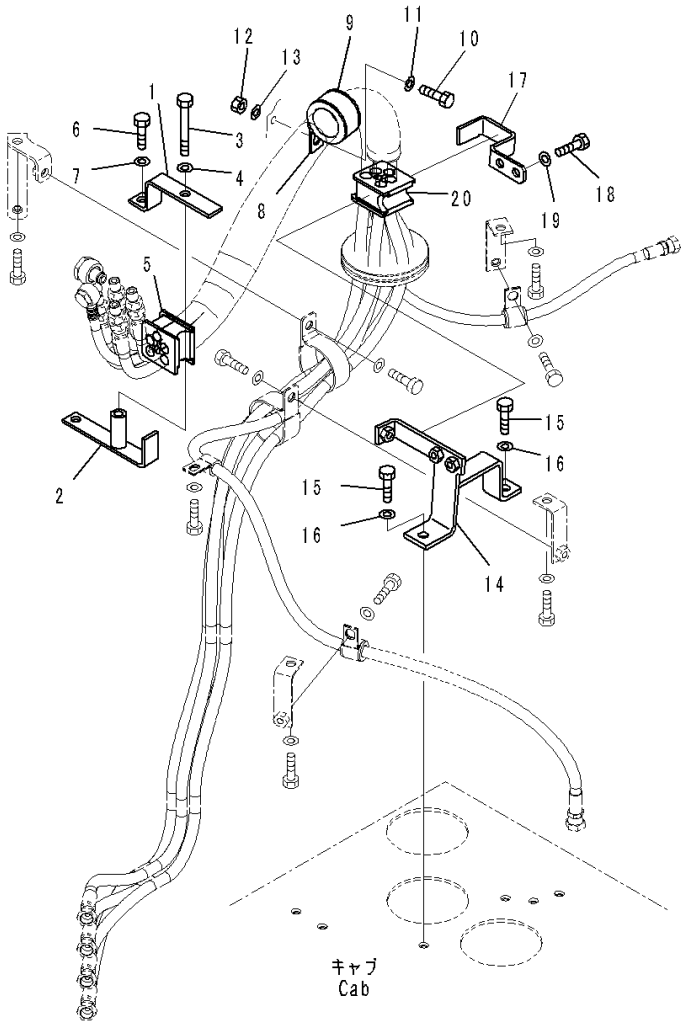

Index	Code	Part Number	Description	Qty	Serial Number
		Note: This list covers following specifications.			
		With 2-lever Loader Control			
		With 2-lever Loader Control, Forward Reverse Switch			
		With 2-lever Loader Control, Joystick Steering System			
1		423-43-48371	Plate	1	90216-
2		423-43-48382	Bracket	1	90216-
3		01010-81080	Bolt	1	90216-
4		01643-31032	Washer	1	90216-
5		423-43-48161	Cushion	1	90216-
6		01010-81030	Bolt	1	90216-
7		01643-31032	Washer	1	90216-
8		20Y-62-15960	Clip	1	90216-
9		423-43-48110	Rubber	1	90216-
10		01010-81020	Bolt	1	90216-
11		01643-31032	Washer	1	90216-
12		01580-11008	Nut	1	90216-
13		01643-31032	Washer	1	90216-
14		423-43-48460	Bracket	1	90216-
15		01010-81025	Bolt	2	90216-
16		01643-31032	Washer	2	90216-
17		423-43-48340	Plate	1	90216-
18		01010-81025	Bolt	2	90216-
19		01643-31032	Washer	2	90216-
20		423-43-48161	Cushion	1	90216-

FIG. K4202-016003 Loader Control Unit (With 2-lever Loader Control, Forward Reverse Switch) (Lever)

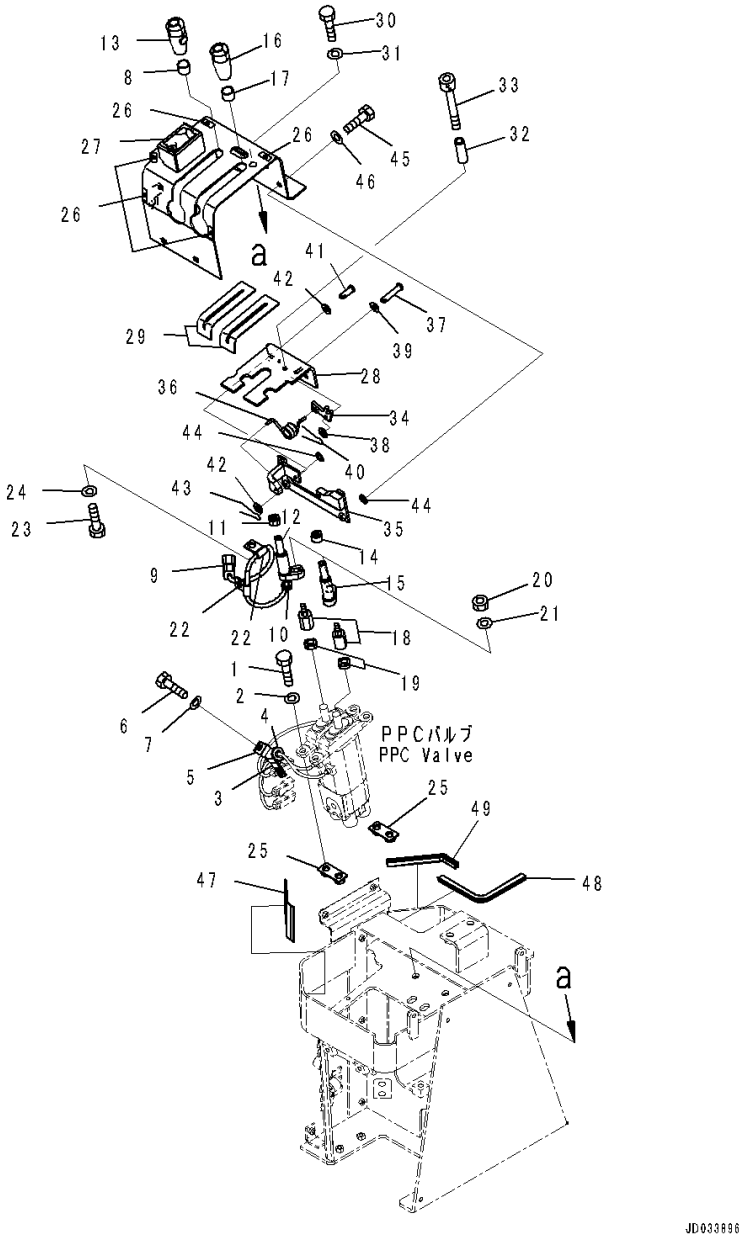

Index	Code	Part Number	Description	Qty	Serial Number
1		01010-81030	Bolt	4	90216-
2		01643-31032	Washer	4	90216-
3		04434-51712	Clip	1	90216-
4		07095-20211	Cushion	1	90216-
5		04434-50610	Clip	1	90216-
6		01010-81016	Bolt	2	90216-
7		01643-31032	Washer	2	90216-
		423-43-48243	Lever Assembly	1	91097-
8		421-43-38430	• Collar	1	90216-
9	C1		• Connector	1	90216-
10		23S-43-51230	• Grommet	1	90216-
11		23S-43-31550	• Nut	1	90216-
12		421-43-37591	• Lever	1	90216-
13		423-43-48261	• Knob Assembly	1	90216-
	C1		• • Body Assembly	1	90216-
	C1		• • Switch Assembly	1	90216-
		421-43-38523	• • Cap	1	90216-
		421-43-38530	• • Spacer	1	90216-
		421-43-38540	• • Spring	1	90216-
		421-43-38550	• • Cap	1	90216-
		421-43-38560	• • Ring	1	90216-
		421-43-38570	• • Plunger	1	90216-
		421-43-38580	• • O-ring	1	90216-
		421-43-38740	• • Stopper	1	90216-
		421-43-38142	Lever Assembly	1	90216-
14		23S-43-31550	• Nut	1	90216-
15		421-43-37591	• Lever	1	90216-
16		421-43-38332	• Knob	1	90216-
17		421-43-38430	• Collar	1	90216-
18		23S-43-51111	Lever	2	90216-
19		23S-43-51240	Nut	2	90216-
20		01580-10806	Nut	2	90216-
21		01643-50823	Washer	2	90216-
22		04434-50610	Clip	2	90216-
23		01010-80816	Bolt	2	90216-
24		01643-30823	Washer	2	90216-
25		423-43-48440	Bracket	2	90216-
26		421-09-21420	Sheet	5	90216-
27		421-43-48182	Cover	1	91081-
28		423-43-48193	Plate	1	90216-

FIG. K4202-016003 Loader Control Unit (With 2-lever Loader Control, Forward Reverse Switch) (Lever)

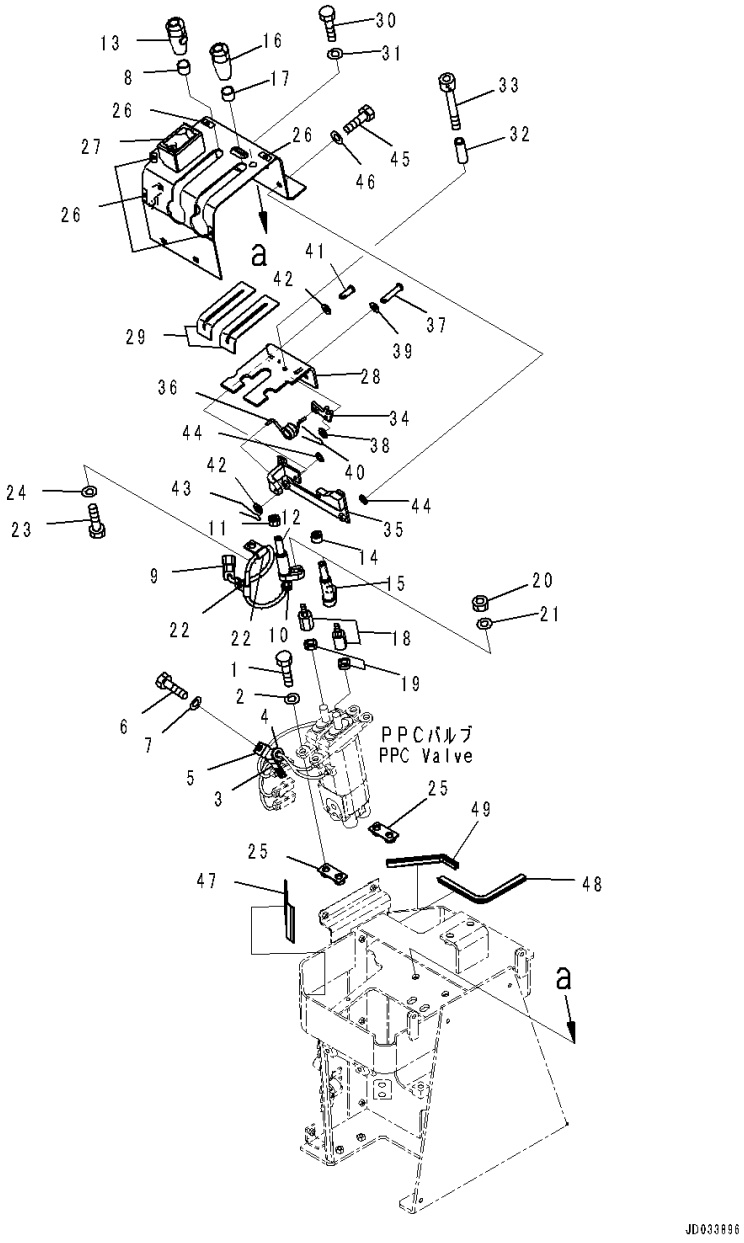

Index	Code	Part Number	Description	Qty	Serial Number
29		423-43-48720	Awning	4	90216-
30		01010-81030	Bolt	4	90216-
31		01643-31032	Washer	4	90216-
32		423-43-48130	Pipe	1	90216-
33		01252-70650	Bolt	1	90216-
34		423-43-48452	Plate	1	90216-
35		423-43-48231	Bracket	1	90216-
36		423-43-48430	Spring	1	90216-
37		04205-10630	Pin	1	90216-
38		01643-30623	Washer	1	90216-
39		01640-20610	Washer	1	90216-
40		04050-11612	Pin, Cotter	1	90216-
41		04205-10618	Pin	1	90216-
42		01640-20610	Washer	2	90216-
43		04050-11612	Pin, Cotter	1	90216-
44		425-15-14240	Shim, T=0.5mm	2	90216-
45		01010-80820	Bolt	2	90216-
46		01643-30823	Washer	2	90216-
47		421-06-42740	Sheet	1	90216-
48		423-54-42990	Finisher	1	90216-
49		423-06-42420	Finisher	1	90216-

FIG. K4202-016008 Loader Control Unit (With 2-lever Loader Control, Forward Reverse Switch) (FNR Selector Switch)

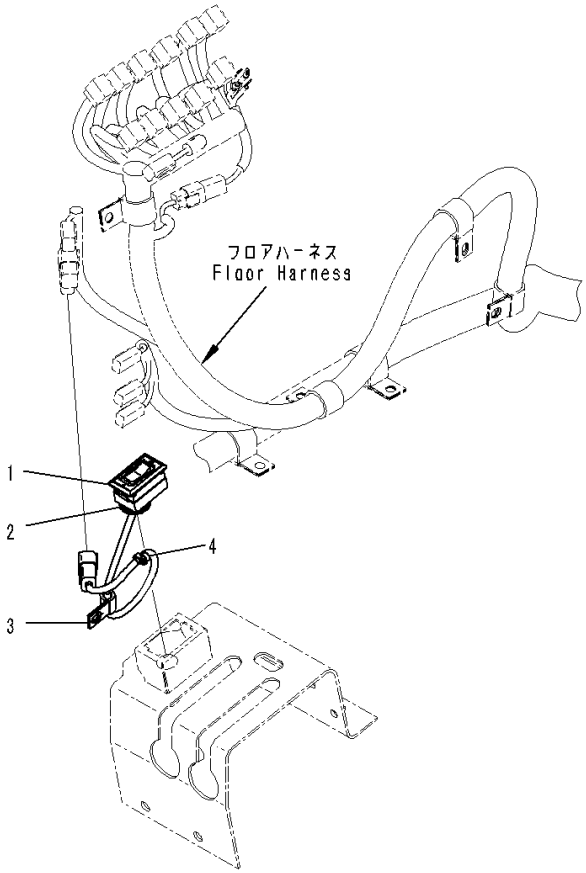

Index	Code	Part Number	Description	Qty	Serial Number
1		421-06-31190	Switch, FNR Selector	1	91043-
2		135-06-34260	Grommet	1	90216-91042
3		04434-51010	Clip	1	90216-
4		08034-40521	Band	1	90216-

FIG. K4202-017006 Loader Control Unit (With 2-lever Loader Control, Joystick Steering System) (PPC Piping) (1/2)

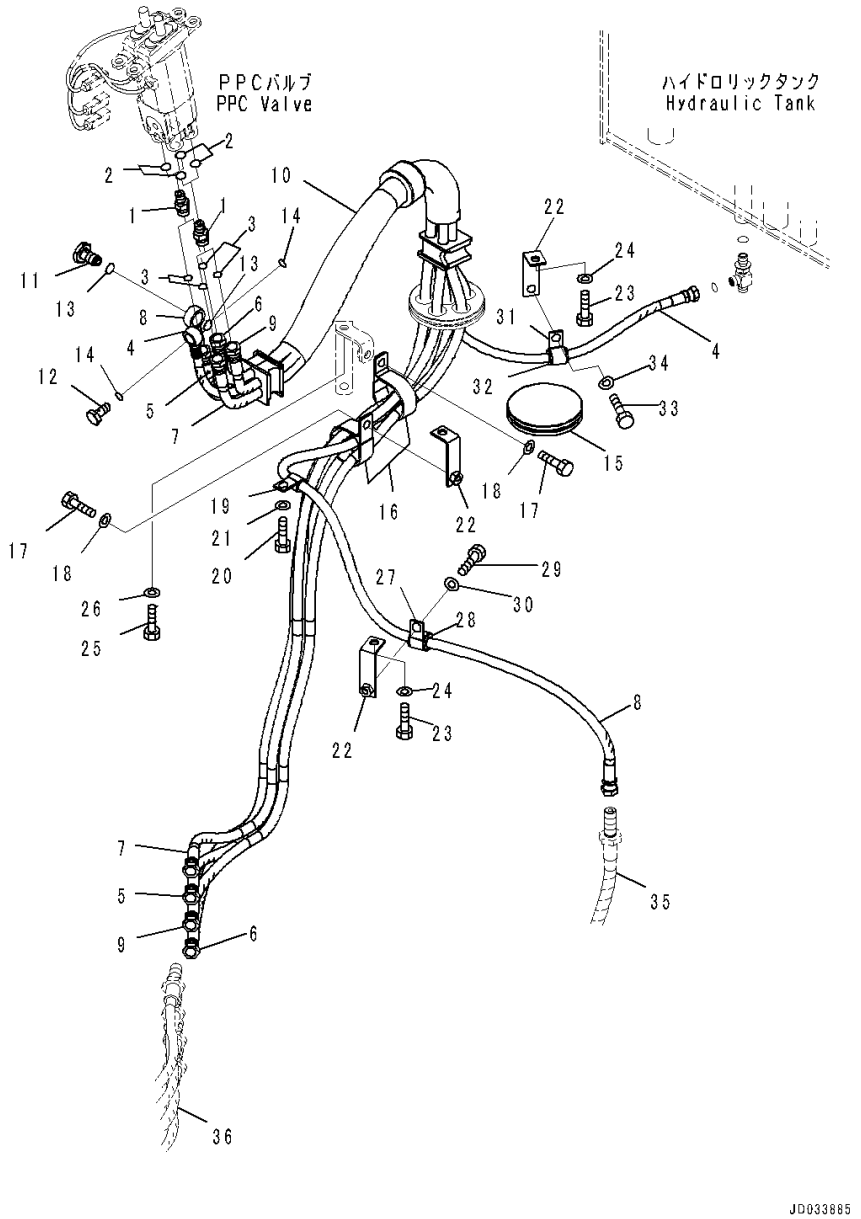

Index	Code	Part Number	Description	Qty	Serial Number
1		02781-0031D	Nipple	4	90216-
2		07002-11423	O-ring	4	90216-
3		02896-11009	O-ring	4	90216-
		421-43-48232	Hose Assembly	1	90921-
4		421-43-48110	• Hose, Black	1	90216-
		21U-62-34720	• • Band, Black	2	90216-
5		421-43-48130	• Hose, Yellow	1	90216-
		21U-62-34710	• • Band, Yellow	2	90216-
6		421-43-48140	• Hose, White	1	90216-
		21U-62-34770	• • Band, White	2	90216-
7		421-43-48150	• Hose, Blue	1	90216-
		21U-62-34750	• • Band, Blue	2	90216-
8		421-43-47830	• Hose, Black-Red	1	90216-
		21U-62-34760	• • Band, Red	2	90216-
		21U-62-34720	• • Band, Black	2	90216-
9		423-43-48512	• Hose, Green	1	90921-
		21U-62-34730	• Band, Green	2	90216-
10		08210-02911	• Tube, Spiral	1	90216-
11		20Y-62-18910	Plug	1	90216-
12		20Y-62-18890	Bolt, Joint	1	90216-
13		07000-12018	O-ring	2	90216-
14		07000-12015	O-ring	2	90216-
15		423-43-38330	Grommet	1	90216-
16		21K-03-11190	Clip	2	90216-
17		01010-81020	Bolt	2	90216-
18		01643-31032	Washer	2	90216-
19		04434-51510	Clip	1	90216-
20		01010-81020	Bolt	1	90216-
21		01643-31032	Washer	1	90216-
22		361-62-21111	Bracket	3	90216-
23		01010-81020	Bolt	3	90216-
24		01643-31032	Washer	3	90216-
25		01010-81020	Bolt	1	90216-
26		01643-31032	Washer	1	90216-
27		04434-52112	Clip	1	90216-
28		07095-20314	Cushion	1	90216-
29		01010-81020	Bolt	1	90216-
30		01643-31032	Washer	1	90216-
31		04434-51712	Clip	1	90216-
32		07095-20211	Cushion	1	90216-

FIG. K4202-017006 Loader Control Unit (With 2-lever Loader Control, Joystick Steering System) (PPC Piping) (1/2)

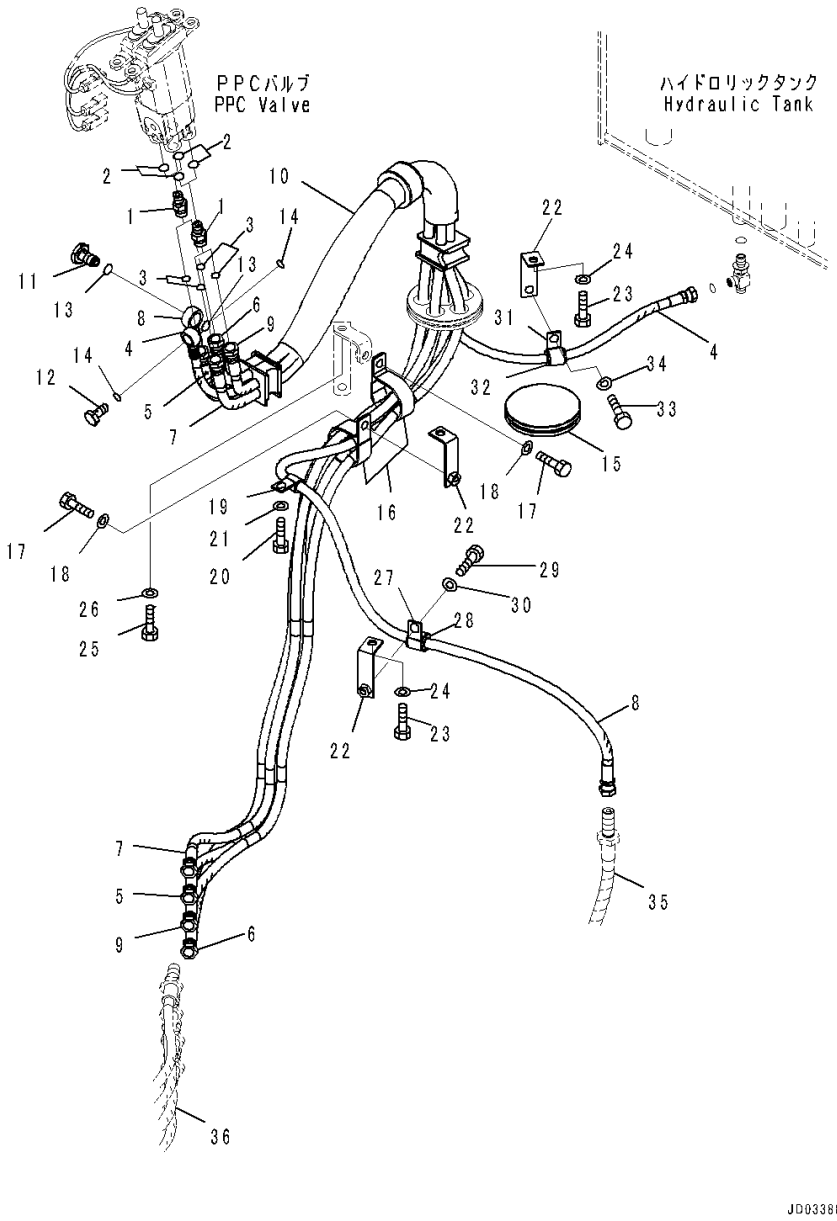

Index	Code	Part Number	Description	Qty	Serial Number
33		01010-81020	Bolt	1	90216-
34		01643-31032	Washer	1	90216-
35		(421-43-47820)	Hose(Refer to Page 697)		-
36		(421-62-43370)	Hose(Refer to Page 444)		-
		(421-62-43370)	Hose(Refer to Page 457)		-

FIG. K4202-017009 Loader Control Unit (Solenoid Valve and Wiring Harness)

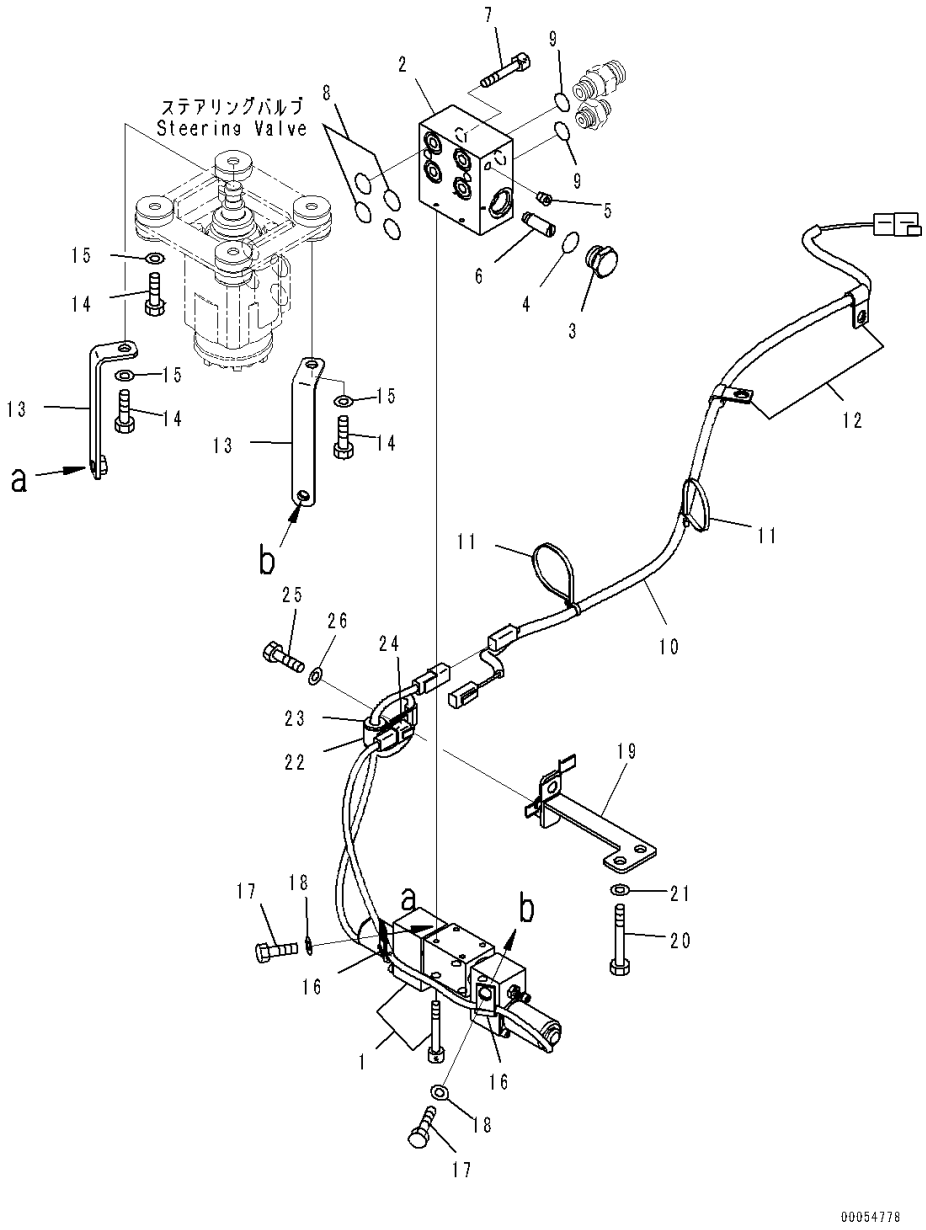

Index	Code	Part Number	Description	Qty	Serial Number
		Note: This list covers following specifications.			
		With 2-lever Loader Control, Joystick Steering System			
		With 2-lever Loader Control and 1-lever Attachment Control, Joystick Steering System			
1		421-S33-3911	Valve Assembly	1	90216-
		421-S33-3921	Block Assembly	1	90216-
2		421-S33-3931	• Block	1	90216-
3		421-S33-3940	• Plug	1	90216-
4		07002-12434	• O-ring	1	90216-
5		07043-70108	• Plug	5	90216-
6		22W-62-17190	• Filter	1	90216-
7		02101-10651	Bolt, Unified	2	90216-
8		07000-12022	O-ring	4	90216-
9		415-62-11560	O-ring	2	90216-
10		423-S33-4370	Wiring Harness	1	90216-
11		08034-40521	Band	2	90216-
12		04434-51012	Clip	2	90216-
13		423-S33-4320	Bracket	2	90216-
14		01010-81255	Bolt	4	90216-
15		01643-31232	Washer	4	90216-
16		04434-50612	Clip	2	90216-
17		01010-81020	Bolt	2	90216-
18		01643-31032	Washer	2	90216-
19		423-S33-4380	Bracket	1	90216-
20		01010-81275	Bolt	2	90216-
21		01643-31232	Washer	2	90216-
22		04434-51712	Clip	1	90216-
23		07095-20211	Cushion	1	90216-
24		04434-50612	Clip	1	90216-
25		01010-81025	Bolt	1	90216-
26		01643-31032	Washer	1	90216-

FIG. K4202-017010 Loader Control Unit (Additional Wiring Harness)

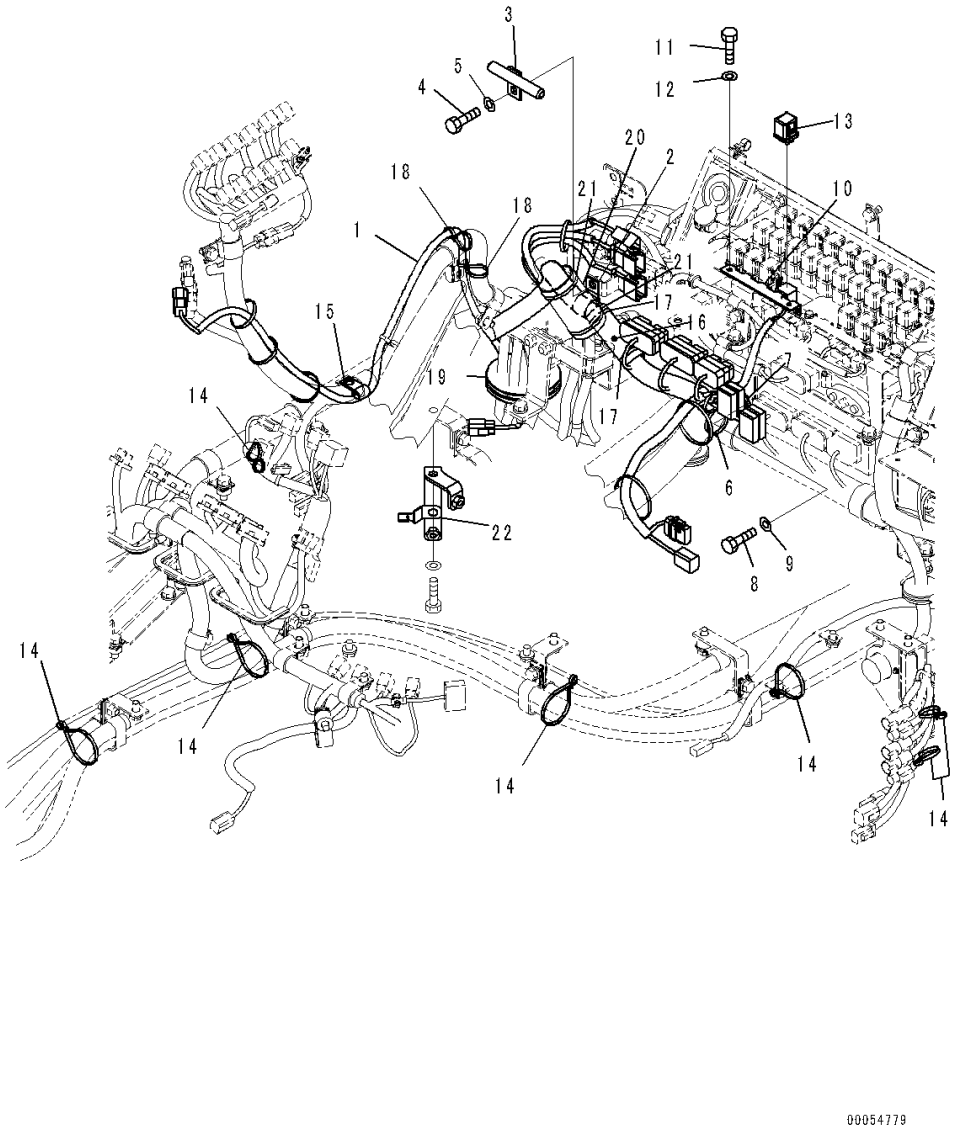

Index	Code	Part Number	Description	Qty	Serial Number
		Note: This list covers following specifications.			
		With 2-lever Loader Control, Joystick Steering System			
		With 2-lever Loader Control and 1-lever Attachment Control, Joystick Steering System			
1		423-S33-4390	Wiring Harness	1	90216-
2		142-06-13540	Clip	1	90216-
3		421-V91-4150	Guide	1	90216-
4		01010-81030	Bolt	1	90216-
5		01643-31032	Washer	1	90216-
6		134-03-61410	Band	1	90216-
7		04434-51012	Clip	1	90216-
8		01010-81025	Bolt	1	90216-
9		01643-31032	Washer	1	90216-
10		569-06-61180	Bracket	1	90216-
11		01010-80616	Bolt	2	90216-
12		01643-30623	Washer	2	90216-
13		569-06-61960	Relay	1	90216-
14		134-03-61410	Band	7	90216-
15		04434-51012	Clip	1	90216-
16		423-06-42740	Sheet	1	90216-
17		08034-20536	Band	2	90216-
18		08034-40521	Band	2	90216-
19		423-S33-4410	Grommet	1	90216-
20		423-06-42740	Sheet	1	90216-
21		08034-20536	Band	2	90216-
22		423-S33-4420	Bracket	1	90216-

FIG. K4202-018001 Loader Control Unit (Console Slider)

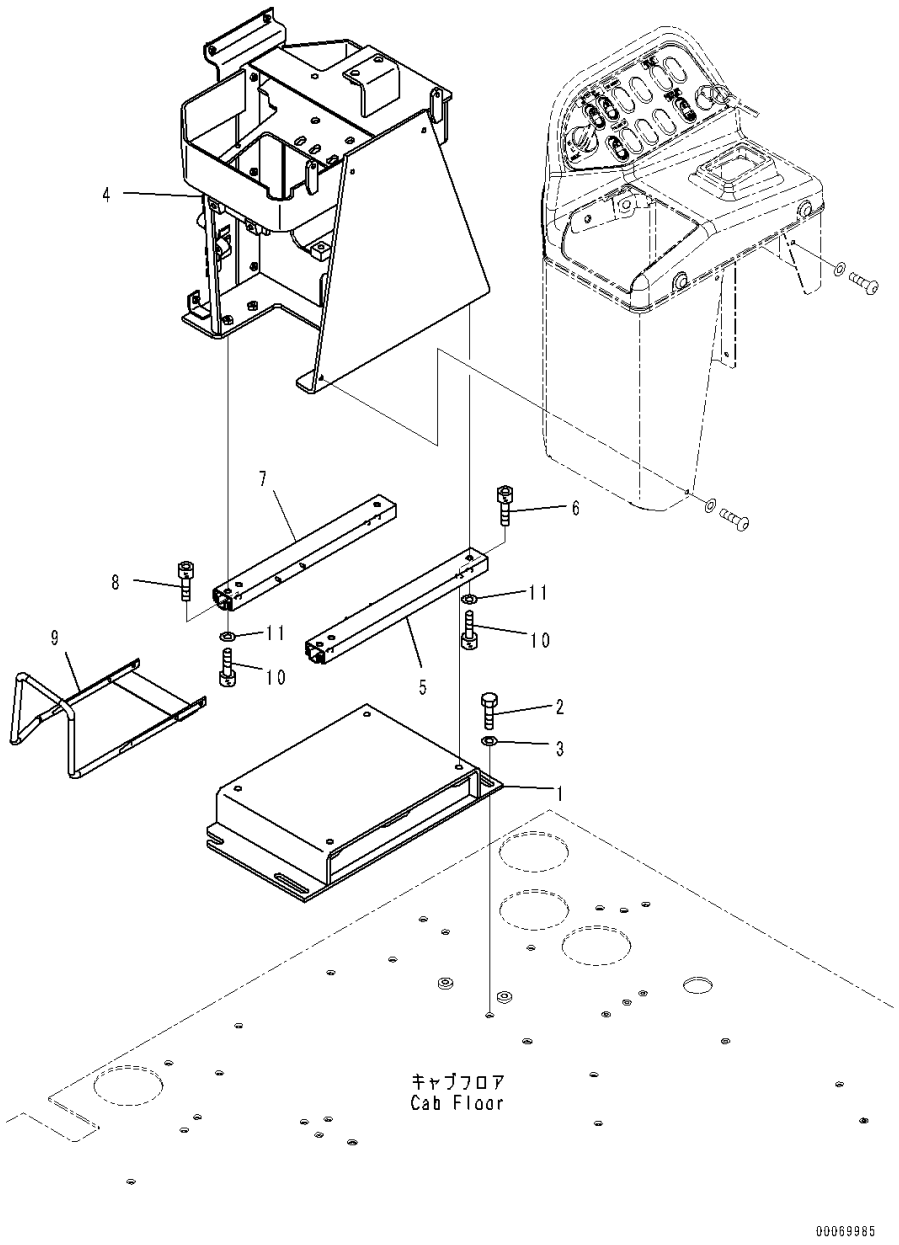

Index	Code	Part Number	Description	Qty	Serial Number
		Note: This list covers following specifications.			
		With 2-lever Loader Control and 1-lever Attachment Control			
		With 2-lever Loader Control and 1-lever Attachment Control, Forward Reverse Switch			
		With 2-lever Loader Control and 1-lever Attachment Control, Joystick Steering System			
1		421-43-49171	Bracket	1	90216-
2		01010-81025	Bolt	4	90216-
3		01643-31032	Washer	4	90216-
4		421-877-4111	Bracket	1	90216-
5		22M-43-21220	Adjuster, L.H.	1	90216-
6		01252-70820	Bolt	2	90216-
7		22M-43-21230	Adjuster, R.H.	1	90216-
8		01252-70820	Bolt	2	90216-
9		423-43-48281	Pipe	1	90216-
10		01252-70820	Bolt	6	90216-
11		01643-50823	Washer	6	90216-

FIG. K4202-018003 Loader Control Unit (Lever) (1/2)

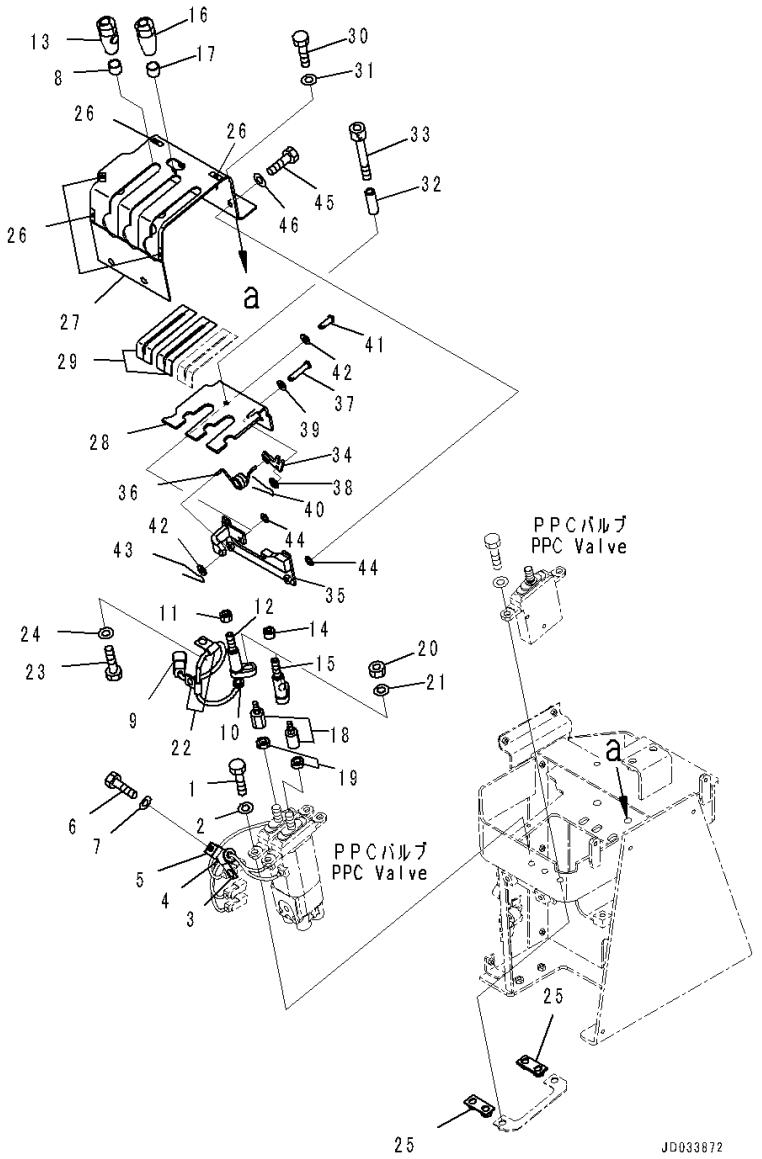

Index	Code	Part Number	Description	Qty	Serial Number
		Note: This list covers following specifications.			
		With 2-lever Loader Control and 1-lever Attachment Control			
		With 2-lever Loader Control and 1-lever Attachment Control, Joystick Steering System			
1		01010-81030	Bolt	4	90216-
2		01643-31032	Washer	4	90216-
3		04434-51712	Clip	1	90216-
4		07095-20211	Cushion	1	90216-
5		04434-50610	Clip	1	90216-
6		01010-81016	Bolt	2	90216-
7		01643-31032	Washer	2	90216-
		423-43-48243	Lever Assembly	1	91097-
8		421-43-38430	• Collar	1	90216-
9	C1		• Connector	1	90216-
10		23S-43-51230	• Grommet	1	90216-
11		23S-43-31550	• Nut	1	90216-
12		421-43-37591	• Lever	1	90216-
13		423-43-48261	• Knob Assembly	1	90216-
	C1		• • Body Assembly	1	90216-
	C1		• • Switch Assembly	1	90216-
		421-43-38523	• • Cap	1	90216-
		421-43-38530	• • Spacer	1	90216-
		421-43-38540	• • Spring	1	90216-
		421-43-38550	• • Cap	1	90216-
		421-43-38560	• • Ring	1	90216-
		421-43-38570	• • Plunger	1	90216-
		421-43-38580	• • O-ring	1	90216-
		421-43-38740	• • Stopper	1	90216-
		421-43-38142	Lever Assembly	1	90216-
14		23S-43-31550	• Nut	1	90216-
15		421-43-37591	• Lever	1	90216-
16		421-43-38332	• Knob	1	90216-
17		421-43-38430	• Collar	1	90216-
18		23S-43-51111	Lever	2	90216-
19		23S-43-51240	Nut	2	90216-
20		01580-10806	Nut	2	90216-
21		01643-50823	Washer	2	90216-
22		04434-50610	Clip	2	90216-
23		01010-80816	Bolt	2	90216-
24		01643-30823	Washer	2	90216-

FIG. K4202-018003 Loader Control Unit (Lever) (1/2)

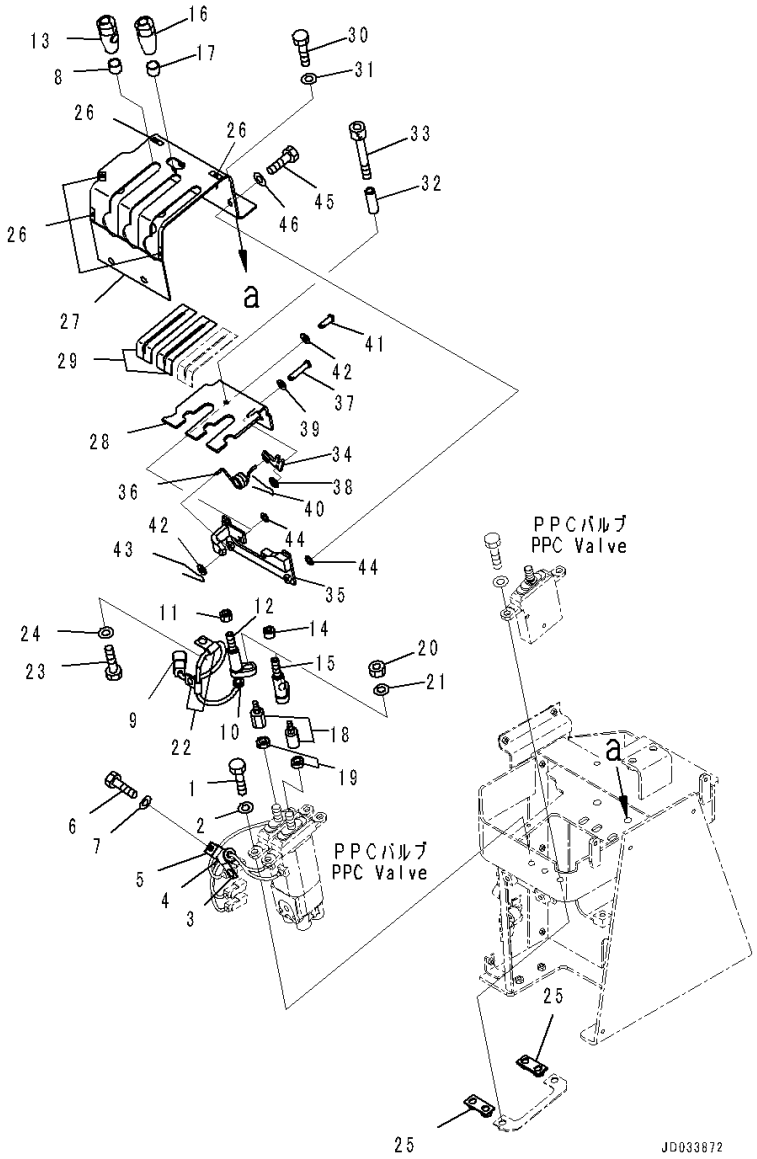

Index	Code	Part Number	Description	Qty	Serial Number
25		423-43-48440	Bracket	2	90216-
26		421-09-21420	Sheet	5	90216-
27		421-877-4130	Cover	1	90216-
28		423-877-4721	Plate	1	90216-
29		423-43-48720	Awning	4	90216-
30		01010-81030	Bolt	4	90216-
31		01643-31032	Washer	4	90216-
32		423-43-48130	Pipe	1	90216-
33		01252-70650	Bolt	1	90216-
34		423-43-48452	Plate	1	90216-
35		423-43-48231	Bracket	1	90216-
36		423-43-48430	Spring	1	90216-
37		04205-10630	Pin	1	90216-
38		01643-30623	Washer	1	90216-
39		01640-20610	Washer	1	90216-
40		04050-11612	Pin, Cotter	1	90216-
41		04205-10618	Pin	1	90216-
42		01640-20610	Washer	2	90216-
43		04050-11612	Pin, Cotter	1	90216-
44		425-15-14240	Shim, T=0.5mm	2	90216-
45		01010-80820	Bolt	2	90216-
46		01643-30823	Washer	2	90216-

FIG. K4202-018004 Loader Control Unit (Inner Parts, PPC Valve) (2/2)

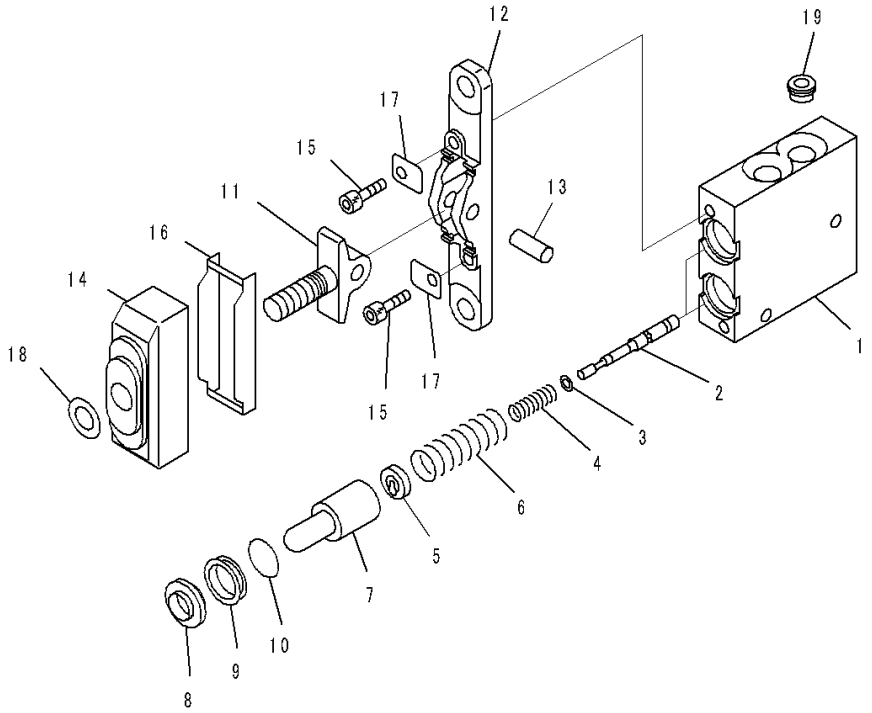

Index	Code	Part Number	Description	Qty	Serial Number
		Note: This list covers following specifications.			
		With 2-lever Loader Control and 1-lever Attachment Control			
		With 2-lever Loader Control and 1-lever Attachment Control, Forward Reverse Switch			
		With 2-lever Loader Control and 1-lever Attachment Control, Joystick Steering System			
		702-16-01460	Valve, Pilot	1	90216-
1	C1		• Body	1	90216-
2	C1		• Valve	2	90216-
3	C1		• Shim, T=0.30mm	2	90216-
4		702-16-56260	• Spring	2	90216-
5		702-16-54750	• Retainer	2	90216-
6		702-16-53470	• Spring	2	90216-
7		702-16-53170	• Piston	2	90216-
8		702-16-51270	• Seal	2	90216-
9		702-16-54580	• Collar	2	90216-
10		702-16-54590	• O-ring	2	90216-
11	C1		• Lever	1	90216-
12	C1		• Plate	1	90216-
13		702-16-54630	• Shaft	1	90216-
14		702-16-54641	• Boot	1	90216-
15		01252-30625	• Bolt	2	90216-
16		702-16-54660	• Plate	1	90216-
17		702-16-54650	• Plate	2	90216-
18		702-16-54920	• Ring	1	90216-
19		702-16-54880	• Filter	1	90216-

FIG. K4202-018005 Loader Control Unit (Lever) (2/2)

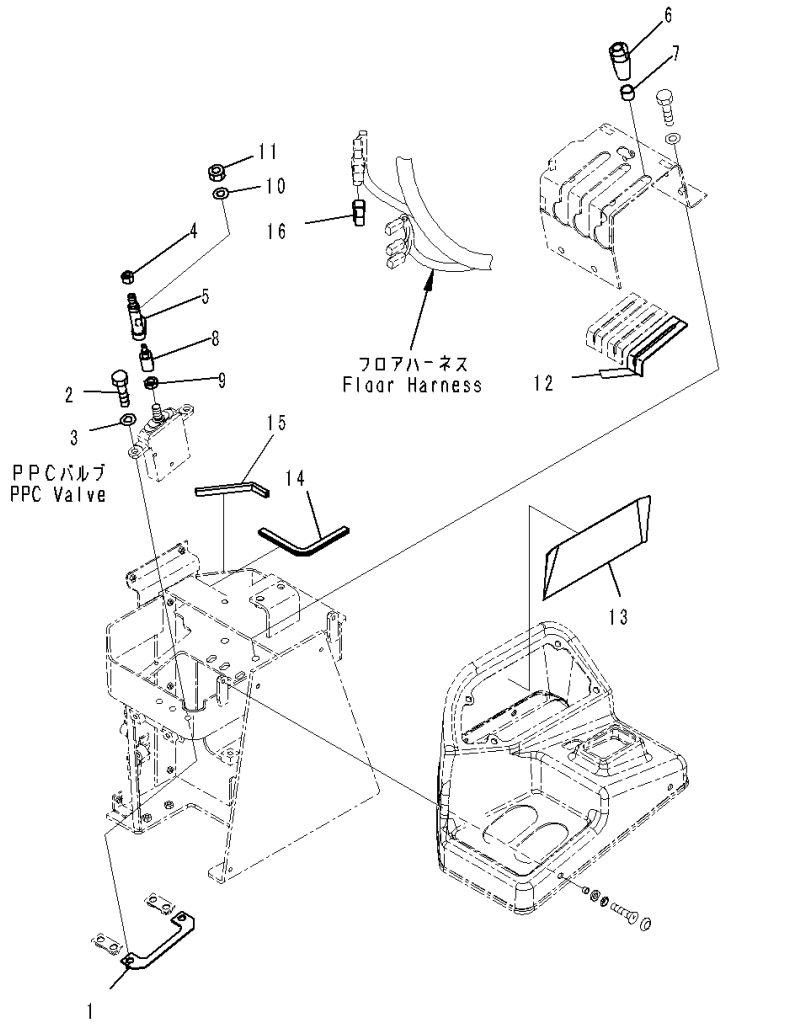

Index	Code	Part Number	Description	Qty	Serial Number
		Note: This list covers following specifications.			
		With 2-lever Loader Control and 1-lever Attachment Control			
		With 2-lever Loader Control and 1-lever Attachment Control, Joystick Steering System			
1		423-877-4810	Plate	1	90216-
2		01010-81030	Bolt	2	90216-
3		01643-31032	Washer	2	90216-
		421-43-38142	Lever Assembly	1	90216-
4		23S-43-31550	• Nut	1	90216-
5		421-43-37591	• Lever	1	90216-
6		421-43-38332	• Knob	1	90216-
7		421-43-38430	• Collar	1	90216-
8		23S-43-51111	Lever	1	90216-
9		23S-43-51240	Nut	1	90216-
10		01643-50823	Washer	1	90216-
11		01580-10806	Nut	1	90216-
12		423-43-48720	Awning	2	90216-
13		421-06-42740	Sheet	1	90216-
14		423-54-42990	Finisher	1	90216-
15		423-06-42420	Finisher	1	90216-
16		423-06-45620	Connector	1	90216-

FIG. K4202-018008 Loader Control Unit (PPC Piping) (1/2)

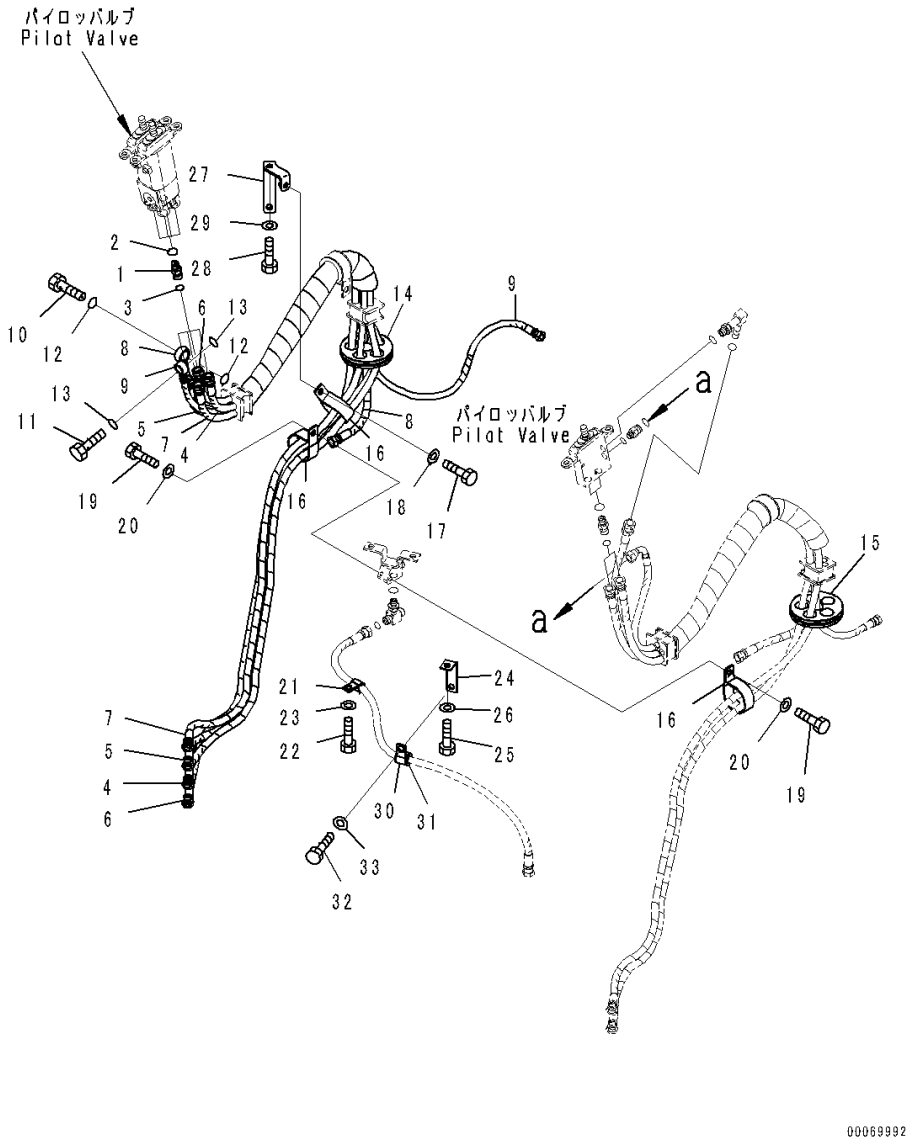

Index	Code	Part Number	Description	Qty	Serial Number
		Note: This list covers following specifications.			
		With 2-lever Loader Control and 1-lever Attachment Control			
		With 2-lever Loader Control and 1-lever Attachment Control, Forward Reverse Switch			
1		02781-0031D	Nipple	4	90216-
2		07002-11423	O-ring	4	90216-
3		02896-11009	O-ring	4	90216-
		421-877-4201	Hose Assembly	1	90216-
4		421-877-4170	• Hose, Green	1	90216-
		21U-62-34730	• • Band, Green	2	90216-
5		421-43-48130	• Hose, Yellow	1	90216-
		21U-62-34710	• • Band, Yellow	2	90216-
6		421-43-48140	• Hose, White	1	90216-
		21U-62-34770	• • Band, White	2	90216-
7		421-43-48150	• Hose, Blue	1	90216-
		21U-62-34750	• • Band, Blue	2	90216-
8		423-877-4170	• Hose, Black-Red	1	90216-
		21U-62-34760	• • Band, Red	2	90216-
		21U-62-34720	• • Band, Black	2	90216-
9		421-877-4210	• Hose, Black	1	90216-
		21U-62-34720	• • Band, Black	2	90216-
10		20Y-62-18910	Plug	1	90216-
11		20Y-62-18890	Bolt, Joint	1	90216-
12		07000-12018	O-ring	2	90216-
13		07000-12015	O-ring	2	90216-
14		423-43-38320	Grommet	1	90216-
15		423-877-4750	Grommet	1	90216-
16		21K-03-11190	Clip	3	90216-
17		01010-81020	Bolt	1	90216-
18		01643-31032	Washer	1	90216-
19		01010-81016	Bolt	2	90216-
20		01643-31032	Washer	2	90216-
21		04434-51510	Clip	1	90216-
22		01010-81020	Bolt	1	90216-
23		01643-31032	Washer	1	90216-
24		361-62-21111	Bracket	1	90216-
25		01010-81020	Bolt	1	90216-
26		01643-31032	Washer	1	90216-
27		423-43-48470	Bracket	1	90216-
28		01010-81020	Bolt	1	90216-

FIG. K4202-018008 Loader Control Unit (PPC Piping) (1/2)

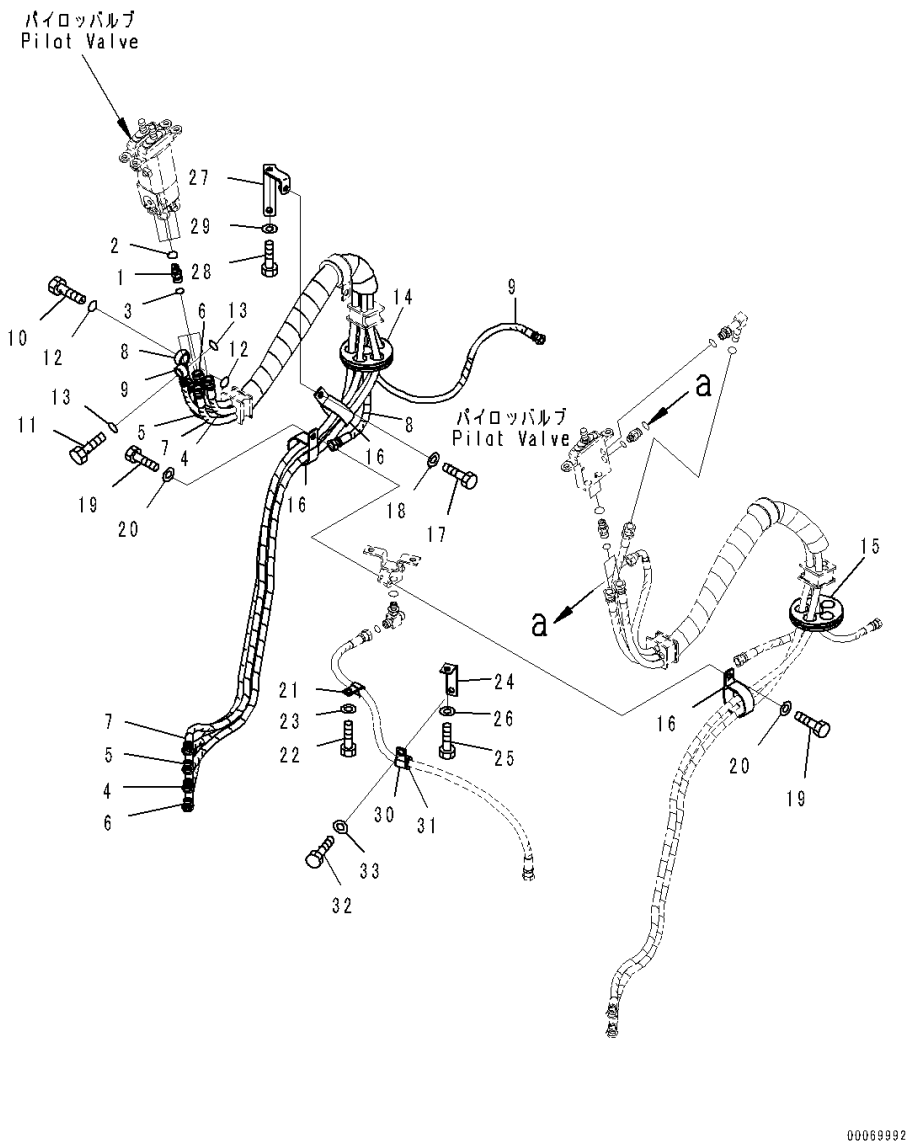

Index	Code	Part Number	Description	Qty	Serial Number
29		01643-31032	Washer	1	90216-
30		04434-52112	Clip	1	90216-
31		07095-20314	Cushion	1	90216-
32		01010-81020	Bolt	1	90216-
33		01643-31032	Washer	1	90216-

FIG. K4202-018009 Loader Control Unit (PPC Piping) (2/2)

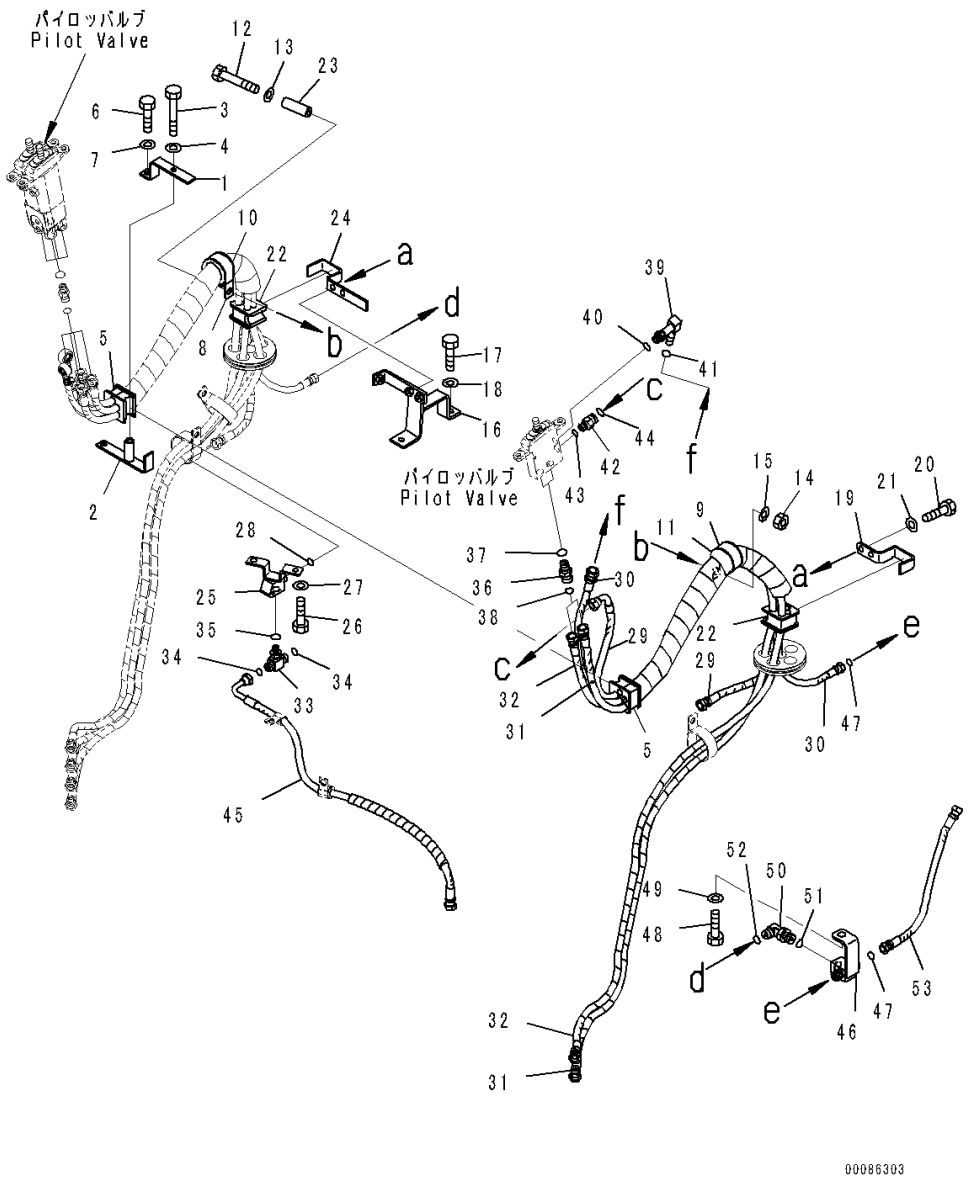

Index	Code	Part Number	Description	Qty	Serial Number
		Note: This list covers following specifications.			
		With 2-lever Loader Control and 1-lever Attachment Control			
		With 2-lever Loader Control and 1-lever Attachment Control, Forward Reverse Switch			
1		423-43-48371	Plate	1	90216-
2		423-43-48382	Bracket	1	90216-
3		01010-81080	Bolt	1	90216-
4		01643-31032	Washer	1	90216-
5		423-43-48161	Cushion	2	90216-
6		01010-81030	Bolt	1	90216-
7		01643-31032	Washer	1	90216-
8		20Y-62-15960	Clip	1	90216-
9		419-09-11150	Clip	1	90216-
10		423-43-48110	Rubber	1	90216-
11		418-62-32180	Rubber	1	90216-
12		01011-81000	Bolt	1	90216-
13		01643-31032	Washer	1	90216-
14		01580-11008	Nut	1	90216-
15		01643-31032	Washer	1	90216-
16		423-43-48460	Bracket	1	90216-
17		01010-81025	Bolt	2	90216-
18		01643-31032	Washer	2	90216-
19		423-43-48340	Plate	1	90216-
20		01010-81030	Bolt	2	90216-
21		01643-31032	Washer	2	90216-
22		423-43-48161	Cushion	2	90216-
23		561-43-43390	Spacer	1	90216-
24		423-877-4860	Plate	1	90216-
25		423-877-4741	Block	1	90216-
26		01010-81020	Bolt	2	90216-
27		01643-31032	Washer	2	90216-
28		02896-11009	O-ring	1	90216-
		421-877-4301	Hose Assembly	1	90216-
29		421-877-4180	• Hose, Black-Red	1	90216-
		21U-62-34760	• • Band, Red	2	90216-
		21U-62-34720	• • Band, Black	2	90216-
30		421-877-4331	• Hose, Black	1	90216-
		21U-62-34720	• • Band, Black	2	90216-
31		421-877-4311	• Hose, Green-White	1	90216-
		21U-62-34770	• • Band, White	2	90216-

FIG. K4202-018009 Loader Control Unit (PPC Piping) (2/2)

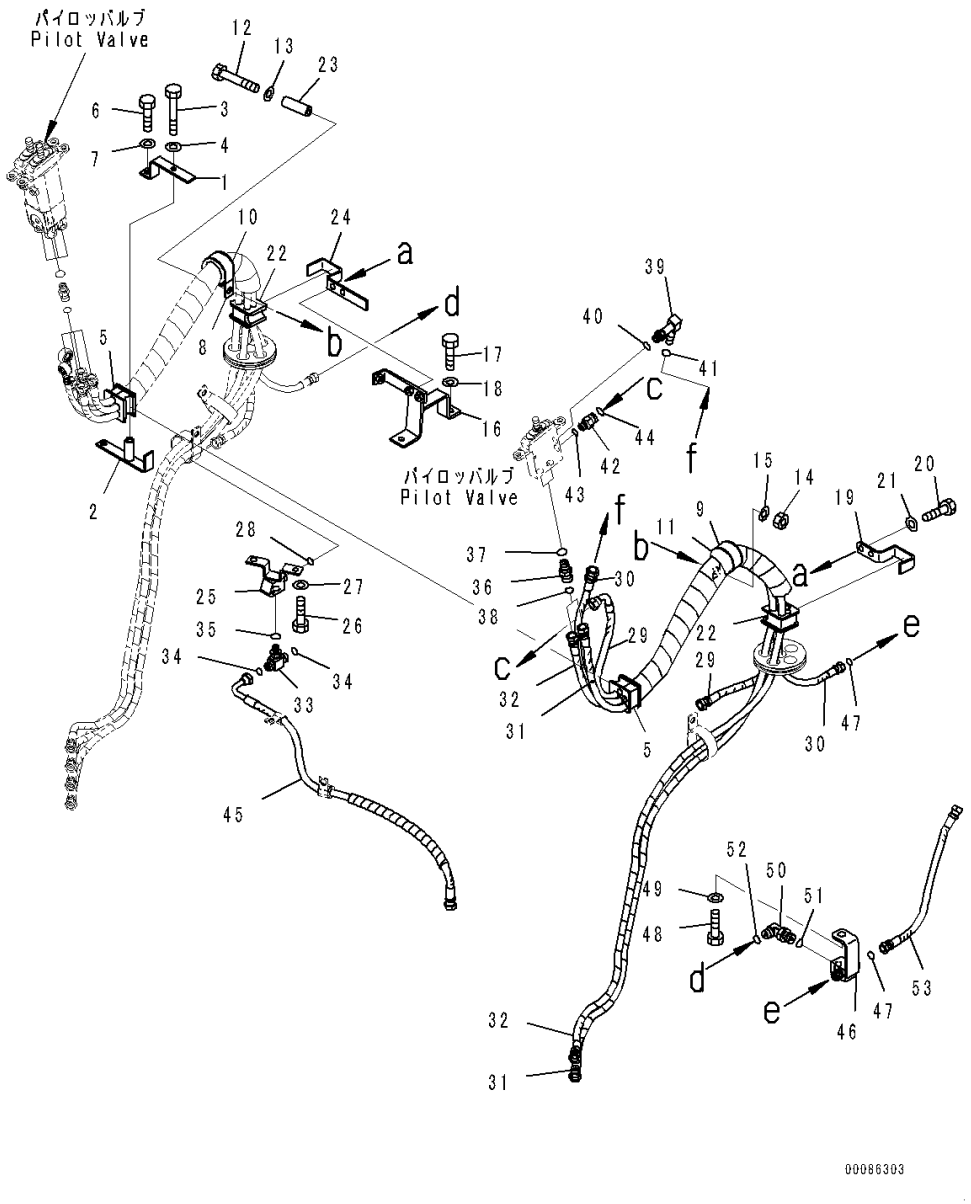

Index	Code	Part Number	Description	Qty	Serial Number
		21U-62-34730	• • Band, Green	2	90216-
32		421-877-4320	• Hose, Blue-White	1	90216-
		21U-62-34770	• • Band, White	2	90216-
		21U-62-34750	• • Band, Blue	2	90216-
33		21W-62-42630	Tee	1	90216-
34		02896-11009	O-ring	2	90216-
35		07002-11423	O-ring	1	90216-
36		11Y-62-12850	Union	2	90216-
37		07000-12011	O-ring	2	90216-
38		02896-11009	O-ring	2	90216-
39		21W-62-43990	Elbow	1	90216-
40		07002-11423	O-ring	1	90216-
41		02896-11008	O-ring	1	90216-
42		11Y-62-12850	Union	1	90216-
43		07000-12011	O-ring	1	90216-
44		02896-11009	O-ring	1	90216-
45		421-877-4230	Hose, Black-Red	1	90216-
		21U-62-34760	• Band, Red	2	90216-
		21U-62-34720	• Band, Black	2	90216-
46		421-877-4150	Tee	1	90216-
47		02896-11008	O-ring	2	90216-
48		01010-81020	Bolt	2	90216-
49		01643-31032	Washer	2	90216-
50		02782-10210	Elbow	1	90216-
51		07002-11423	O-ring	1	90216-
52		02896-11008	O-ring	1	90216-
53		02760-00204	Hose, Face Seal Type	1	90216-

FIG. K4202-019003 Loader Control Unit (With 2-lever Loader Control and 1-lever Attachment Control, Forward Reverse Switch) (Lever) (1/2)

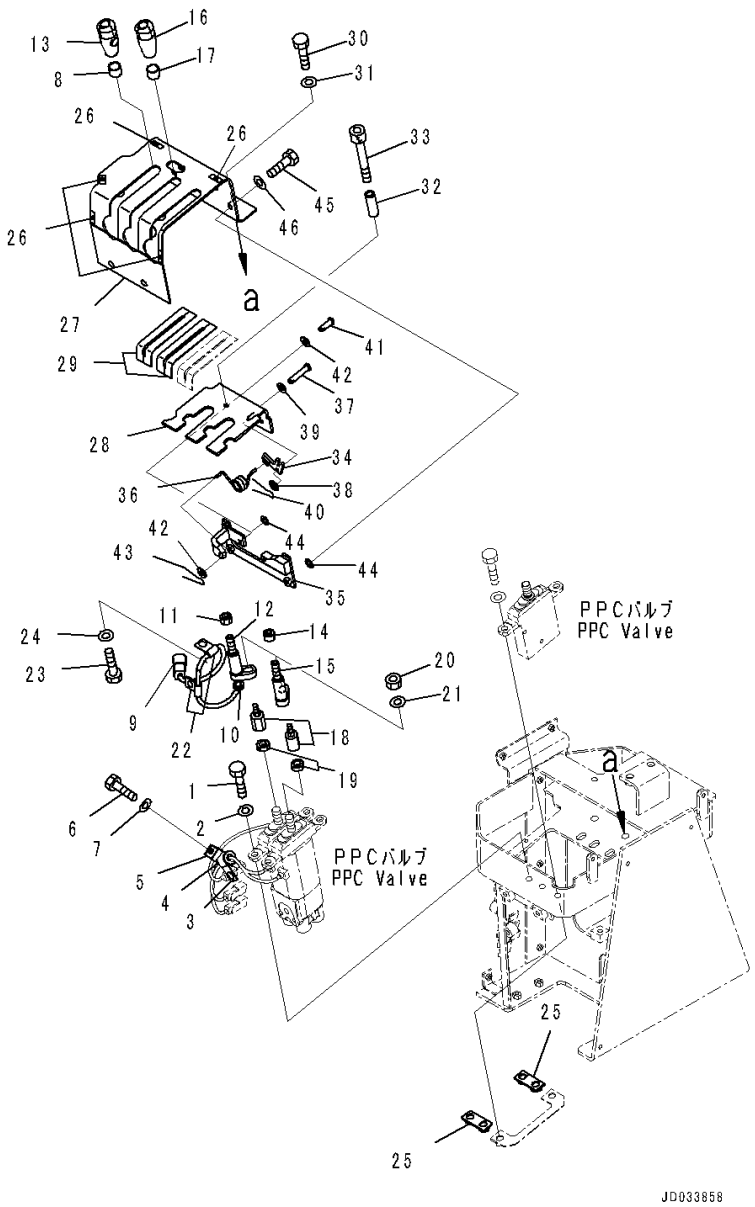

Index	Code	Part Number	Description	Qty	Serial Number
1		01010-81030	Bolt	4	90216-
2		01643-31032	Washer	4	90216-
3		04434-51712	Clip	1	90216-
4		07095-20211	Cushion	1	90216-
5		04434-50610	Clip	1	90216-
6		01010-81016	Bolt	2	90216-
7		01643-31032	Washer	2	90216-
		423-43-48243	Lever Assembly	1	91097-
8		421-43-38430	• Collar	1	90216-
9	C1		• Connector	1	90216-
10		23S-43-51230	• Grommet	1	90216-
11		23S-43-31550	• Nut	1	90216-
12		421-43-37591	• Lever	1	90216-
13		423-43-48261	• Knob Assembly	1	90216-
	C1		• • Body Assembly	1	90216-
	C1		• • Switch Assembly	1	90216-
		421-43-38523	• • Cap	1	90216-
		421-43-38530	• • Spacer	1	90216-
		421-43-38540	• • Spring	1	90216-
		421-43-38550	• • Cap	1	90216-
		421-43-38560	• • Ring	1	90216-
		421-43-38570	• • Plunger	1	90216-
		421-43-38580	• • O-ring	1	90216-
		421-43-38740	• • Stopper	1	90216-
		421-43-38142	Lever Assembly	1	90216-
14		23S-43-31550	• Nut	1	90216-
15		421-43-37591	• Lever	1	90216-
16		421-43-38332	• Knob	1	90216-
17		421-43-38430	• Collar	1	90216-
18		23S-43-51111	Lever	2	90216-
19		23S-43-51240	Nut	2	90216-
20		01580-10806	Nut	2	90216-
21		01643-50823	Washer	2	90216-
22		04434-50610	Clip	2	90216-
23		01010-80816	Bolt	2	90216-
24		01643-30823	Washer	2	90216-
25		423-43-48440	Bracket	2	90216-
26		421-09-21420	Sheet	5	90216-
27		421-877-4122	Cover	1	91081-

FIG. K4202-019003 Loader Control Unit (With 2-lever Loader Control and 1-lever Attachment Control, Forward Reverse Switch) (Lever) (1/2)

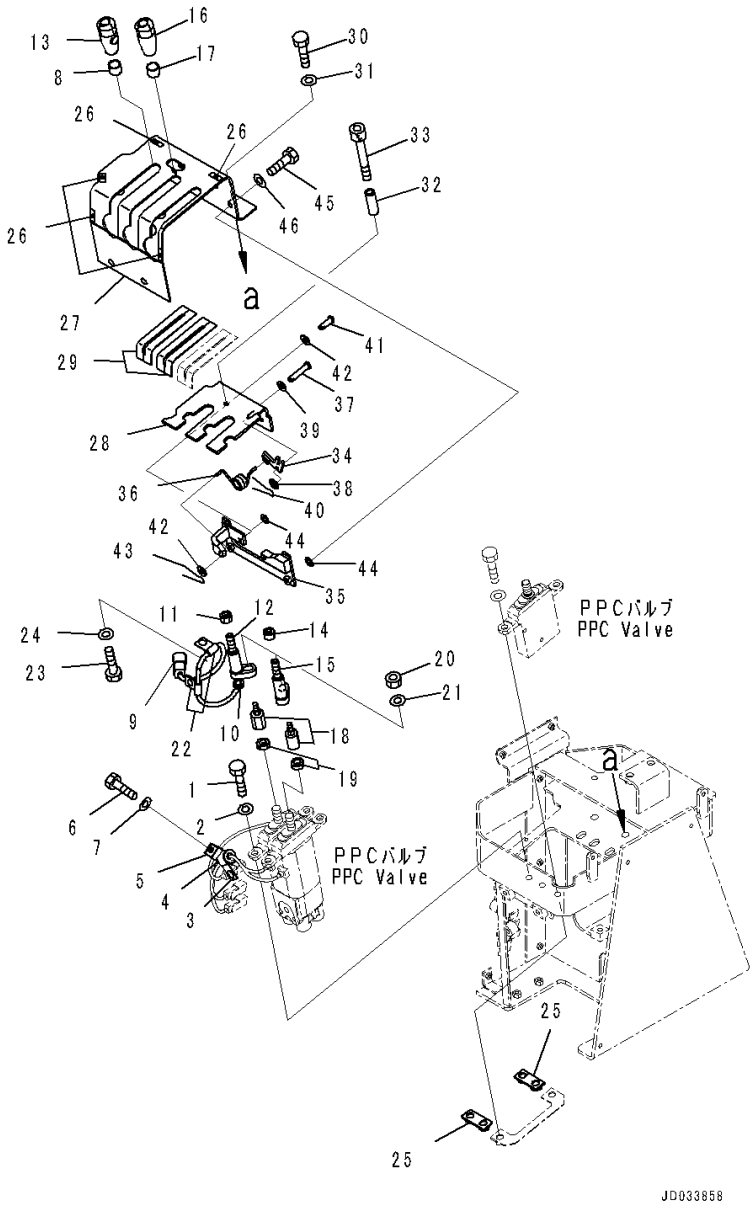

Index	Code	Part Number	Description	Qty	Serial Number
28		423-877-4721	Plate	1	90216-
29		423-43-48720	Awning	4	90216-
30		01010-81030	Bolt	4	90216-
31		01643-31032	Washer	4	90216-
32		423-43-48130	Pipe	1	90216-
33		01252-70650	Bolt	1	90216-
34		423-43-48452	Plate	1	90216-
35		423-43-48231	Bracket	1	90216-
36		423-43-48430	Spring	1	90216-
37		04205-10630	Pin	1	90216-
38		01643-30623	Washer	1	90216-
39		01640-20610	Washer	1	90216-
40		04050-11612	Pin, Cotter	1	90216-
41		04205-10618	Pin	1	90216-
42		01640-20610	Washer	2	90216-
43		04050-11612	Pin, Cotter	1	90216-
44		425-15-14240	Shim, T=0.5mm	2	90216-
45		01010-80820	Bolt	2	90216-
46		01643-30823	Washer	2	90216-

FIG. K4202-019005 Loader Control Unit (With 2-lever Loader Control and 1-lever Attachment Control, Forward Reverse Switch) (Lever) (2/2)

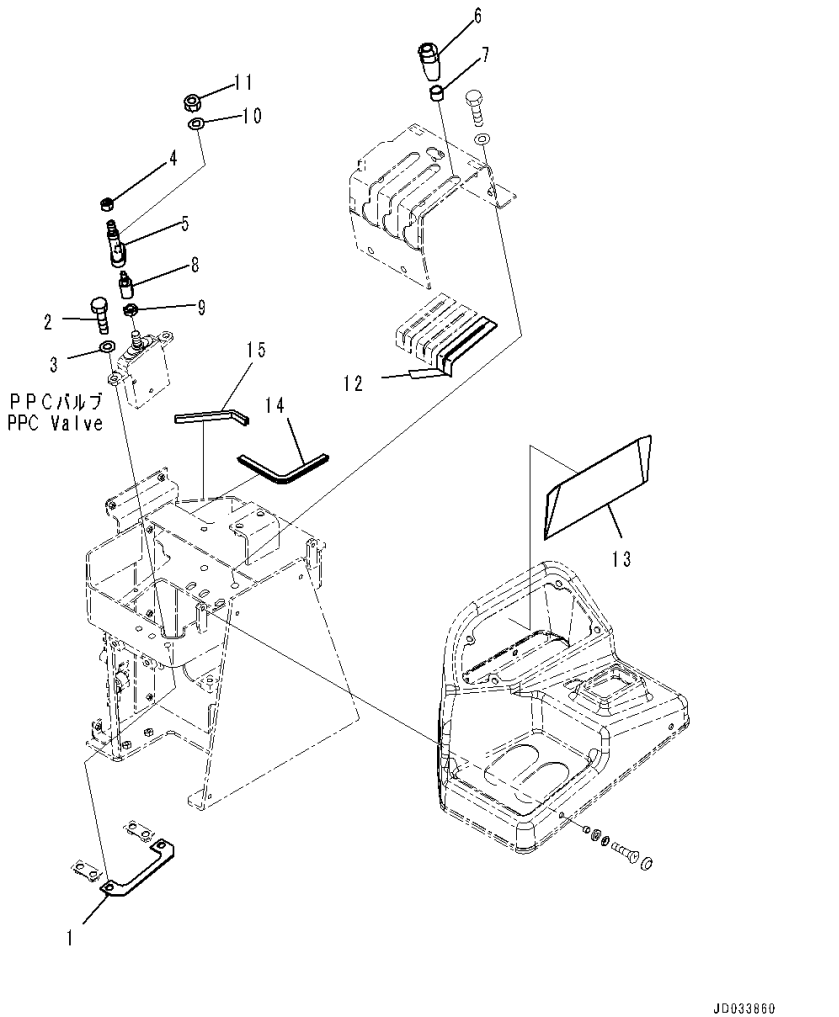

Index	Code	Part Number	Description	Qty	Serial Number
1		423-877-4810	Plate	1	90216-
2		01010-81030	Bolt	2	90216-
3		01643-31032	Washer	2	90216-
		421-43-38142	Lever Assembly	1	90216-
4		23S-43-31550	• Nut	1	90216-
5		421-43-37591	• Lever	1	90216-
6		421-43-38332	• Knob	1	90216-
7		421-43-38430	• Collar	1	90216-
8		23S-43-51111	Lever	1	90216-
9		23S-43-51240	Nut	1	90216-
10		01643-50823	Washer	1	90216-
11		01580-10806	Nut	1	90216-
12		423-43-48720	Awning	2	90216-
13		421-06-42740	Sheet	1	90216-
14		423-54-42990	Finisher	1	90216-
15		423-06-42420	Finisher	1	90216-

FIG. K4202-019010 Loader Control Unit (With 2-lever Loader Control and 1-lever Attachment Control, Forward Reverse Switch) (FNR Selector Switch)

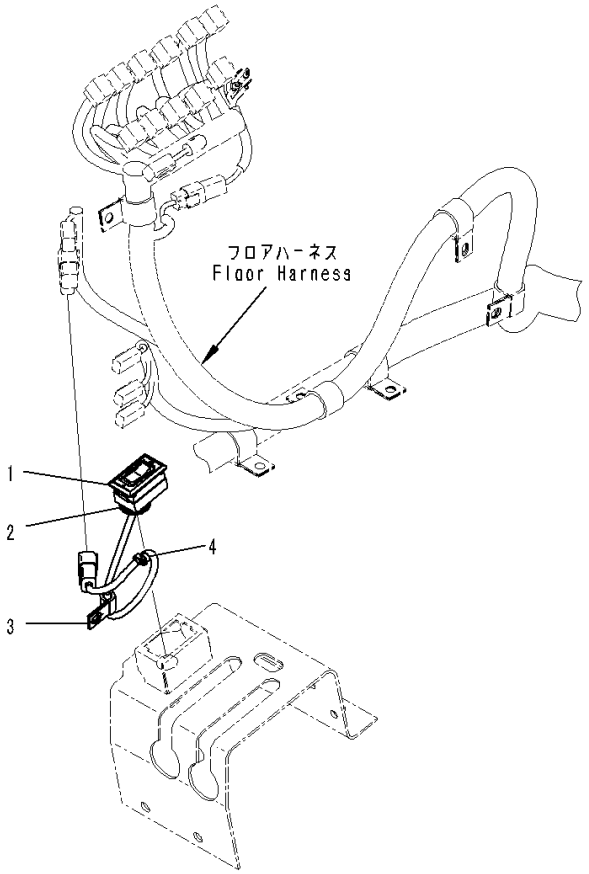

Index	Code	Part Number	Description	Qty	Serial Number
1		421-06-31190	Switch, FNR Selector	1	91043-
2		175-06-81610	Grommet	1	90216-91042
3		04434-51010	Clip	1	90216-
4		08034-40521	Band	1	90216-

FIG. K4202-021008 Loader Control Unit (With 2-lever Loader Control and 1-lever Attachment Control, Joystick Steering System) (PPC Piping) (1/2)

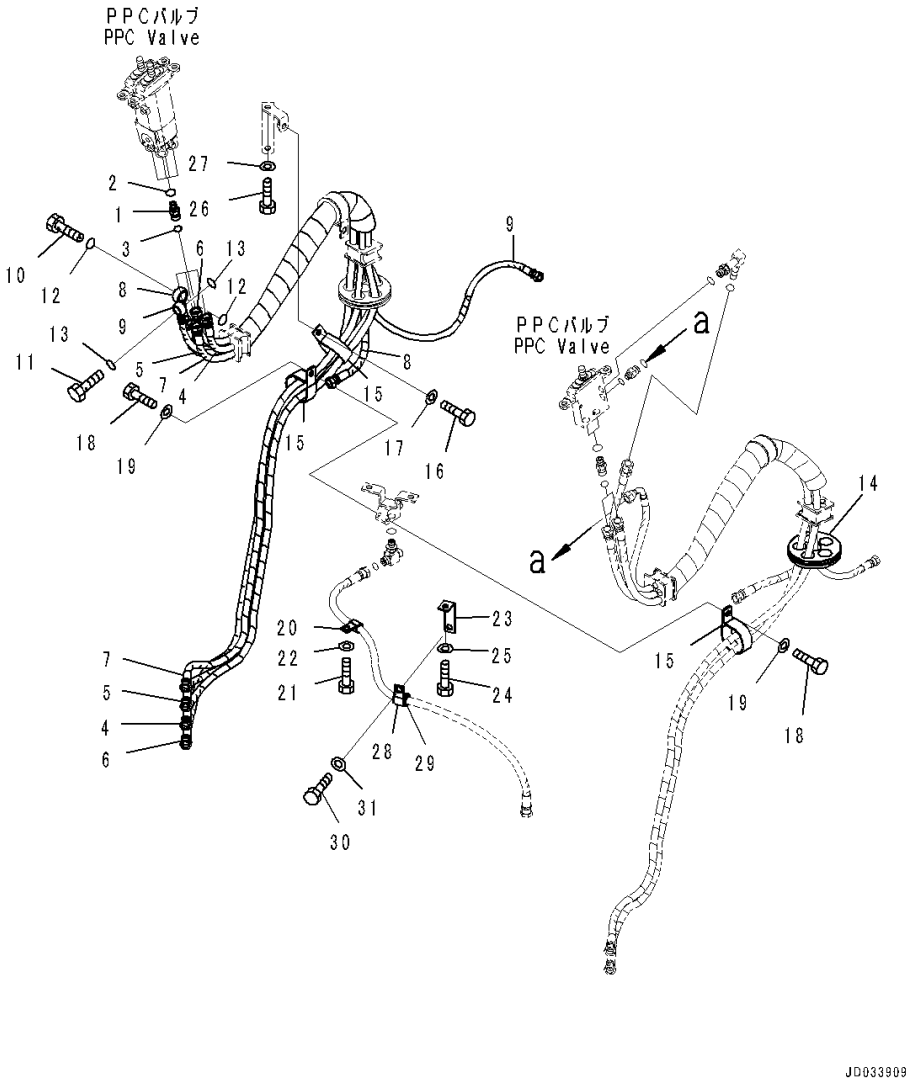

Index	Code	Part Number	Description	Qty	Serial Number
1		02781-0031D	Nipple	4	90216-
2		07002-11423	O-ring	4	90216-
3		02896-11009	O-ring	4	90216-
		421-877-4201	Hose Assembly	1	90216-
4		421-877-4170	• Hose, Green	1	90216-
		21U-62-34730	• • Band, Green	2	90216-
5		421-43-48130	• Hose, Yellow	1	90216-
		21U-62-34710	• • Band, Yellow	2	90216-
6		421-43-48140	• Hose, White	1	90216-
		21U-62-34770	• • Band, White	2	90216-
7		421-43-48150	• Hose, Blue	1	90216-
		21U-62-34750	• • Band, Blue	2	90216-
8		423-877-4170	• Hose, Black-Red	1	90216-
		21U-62-34760	• • Band, Red	2	90216-
		21U-62-34720	• • Band, Black	2	90216-
9		421-877-4210	• Hose, Black	1	90216-
		21U-62-34720	• • Band, Black	2	90216-
10		20Y-62-18910	Plug	1	90216-
11		20Y-62-18890	Bolt, Joint	1	90216-
12		07000-12018	O-ring	2	90216-
13		07000-12015	O-ring	2	90216-
14		423-877-4750	Grommet	1	90216-
15		21K-03-11190	Clip	3	90216-
16		01010-81020	Bolt	1	90216-
17		01643-31032	Washer	1	90216-
18		01010-81016	Bolt	2	90216-
19		01643-31032	Washer	2	90216-
20		04434-51510	Clip	1	90216-
21		01010-81020	Bolt	1	90216-
22		01643-31032	Washer	1	90216-
23		361-62-21111	Bracket	1	90216-
24		01010-81020	Bolt	1	90216-
25		01643-31032	Washer	1	90216-
26		01010-81020	Bolt	1	90216-
27		01643-31032	Washer	1	90216-
28		04434-52112	Clip	1	90216-
29		07095-20314	Cushion	1	90216-
30		01010-81020	Bolt	1	90216-
31		01643-31032	Washer	1	90216-

FIG. K4202-021009 Loader Control Unit (With 2-lever Loader Control and 1-lever Attachment Control, Joystick Steering System) (PPC Piping) (2/2)

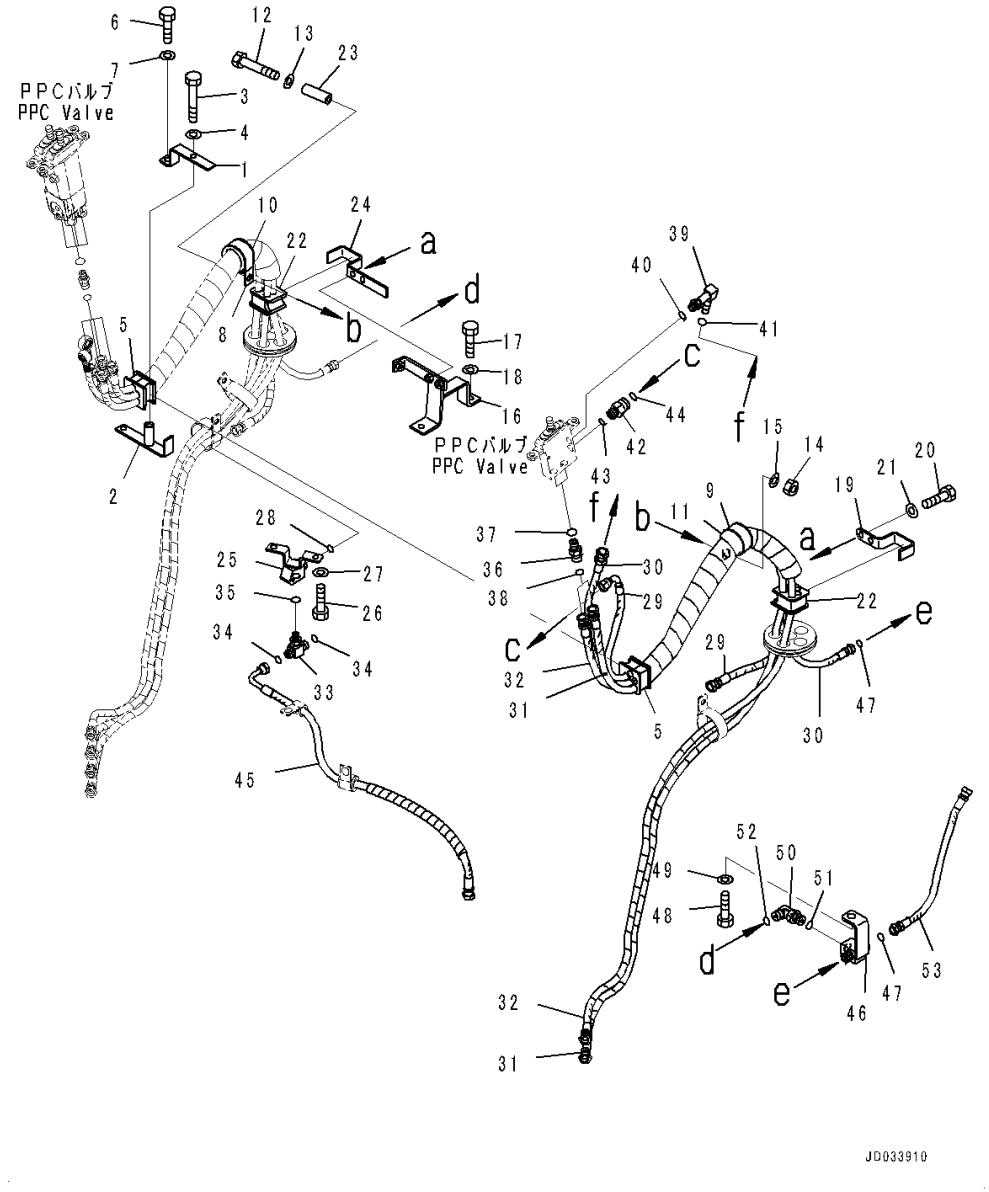

Index	Code	Part Number	Description	Qty	Serial Number
1		423-43-48371	Plate	1	90216-
2		423-43-48382	Bracket	1	90216-
3		01010-81080	Bolt	1	90216-
4		01643-31032	Washer	1	90216-
5		423-43-48161	Cushion	2	90216-
6		01010-81030	Bolt	1	90216-
7		01643-31032	Washer	1	90216-
8		20Y-62-15960	Clip	1	90216-
9		419-09-11150	Clip	1	90216-
10		423-43-48110	Rubber	1	90216-
11		418-62-32180	Rubber	1	90216-
12		01011-81000	Bolt	1	90216-
13		01643-31032	Washer	1	90216-
14		01580-11008	Nut	1	90216-
15		01643-31032	Washer	1	90216-
16		423-43-48460	Bracket	1	90216-
17		01010-81025	Bolt	2	90216-
18		01643-31032	Washer	2	90216-
19		423-43-48340	Plate	1	90216-
20		01010-81030	Bolt	2	90216-
21		01643-31032	Washer	2	90216-
22		423-43-48161	Cushion	2	90216-
23		561-43-43390	Spacer	1	90216-
24		423-877-4860	Plate	1	90216-
25		423-877-4741	Block	1	90216-
26		01010-81020	Bolt	2	90216-
27		01643-31032	Washer	2	90216-
28		02896-11009	O-ring	1	90216-
		421-877-4301	Hose Assembly	1	90216-
29		421-877-4180	• Hose, Black-Red	1	90216-
		21U-62-34760	• • Band, Red	2	90216-
		21U-62-34720	• • Band, Black	2	90216-
30		421-877-4331	• Hose, Black	1	90216-
		21U-62-34720	• • Band, Black	2	90216-
31		421-877-4311	• Hose, Green-White	1	90216-
		21U-62-34770	• • Band, White	2	90216-
		21U-62-34730	• • Band, Green	2	90216-
32		421-877-4320	• Hose, Blue-White	1	90216-
		21U-62-34770	• • Band, White	2	90216-

FIG. K4202-021009 Loader Control Unit (With 2-lever Loader Control and 1-lever Attachment Control, Joystick Steering System) (PPC Piping) (2/2)

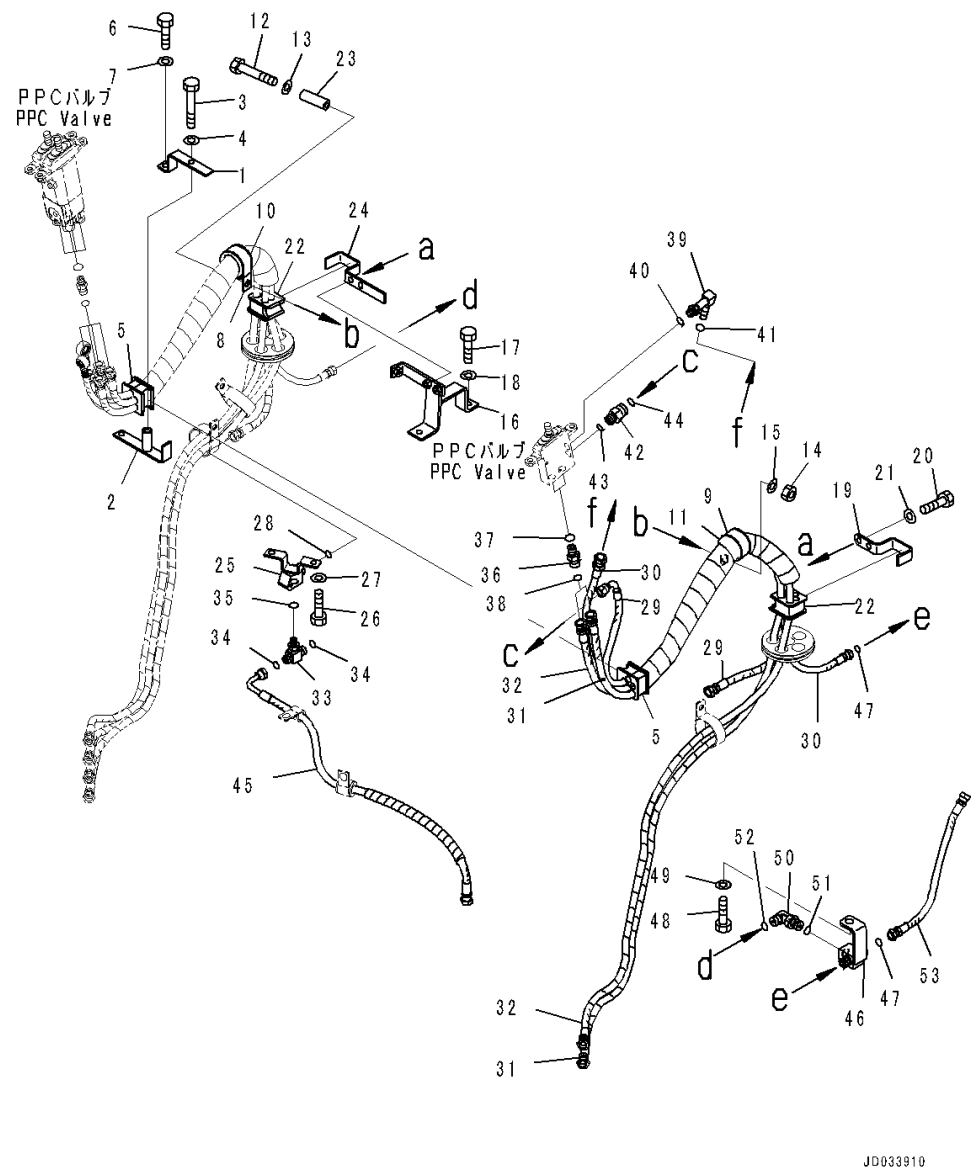

Index	Code	Part Number	Description	Qty	Serial Number
		21U-62-34750	• • Band, Blue	2	90216-
33		21W-62-42630	Tee	1	90216-
34		02896-11009	O-ring	2	90216-
35		07002-11423	O-ring	1	90216-
36		11Y-62-12850	Union	2	90216-
37		07000-12011	O-ring	2	90216-
38		02896-11009	O-ring	2	90216-
39		21W-62-43990	Elbow	1	90216-
40		07002-11423	O-ring	1	90216-
41		02896-11008	O-ring	1	90216-
42		11Y-62-12850	Union	1	90216-
43		07000-12011	O-ring	1	90216-
44		02896-11009	O-ring	1	90216-
45		421-877-4230	Hose, Black-Red	1	90216-
		21U-62-34760	• Band, Red	2	90216-
		21U-62-34720	• Band, Black	2	90216-
46		421-877-4150	Tee	1	90216-
47		02896-11008	O-ring	2	90216-
48		01010-81020	Bolt	2	90216-
49		01643-31032	Washer	2	90216-
50		02782-10210	Elbow	1	90216-
51		07002-11423	O-ring	1	90216-
52		02896-11008	O-ring	1	90216-
53		02760-00204	Hose, Face Seal Type	1	90216-

FIG. K4204-001001 Steering Controller (With Joystick Steering System)

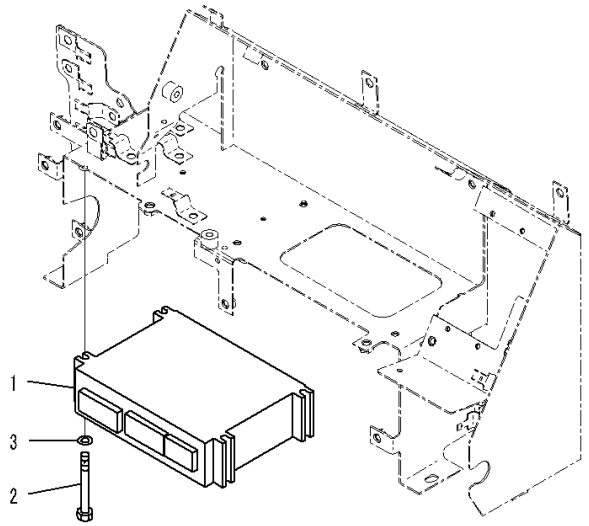

00060019

Index	Code	Part Number	Description	Qty	Serial Number
1		7823-33-3001	Controller	1	90216-
2		01010-80880	Bolt	4	90216-
3		01643-30823	Washer	4	90216-

FIG. K4205-019001 Switch (With Low Idle Up Switch)

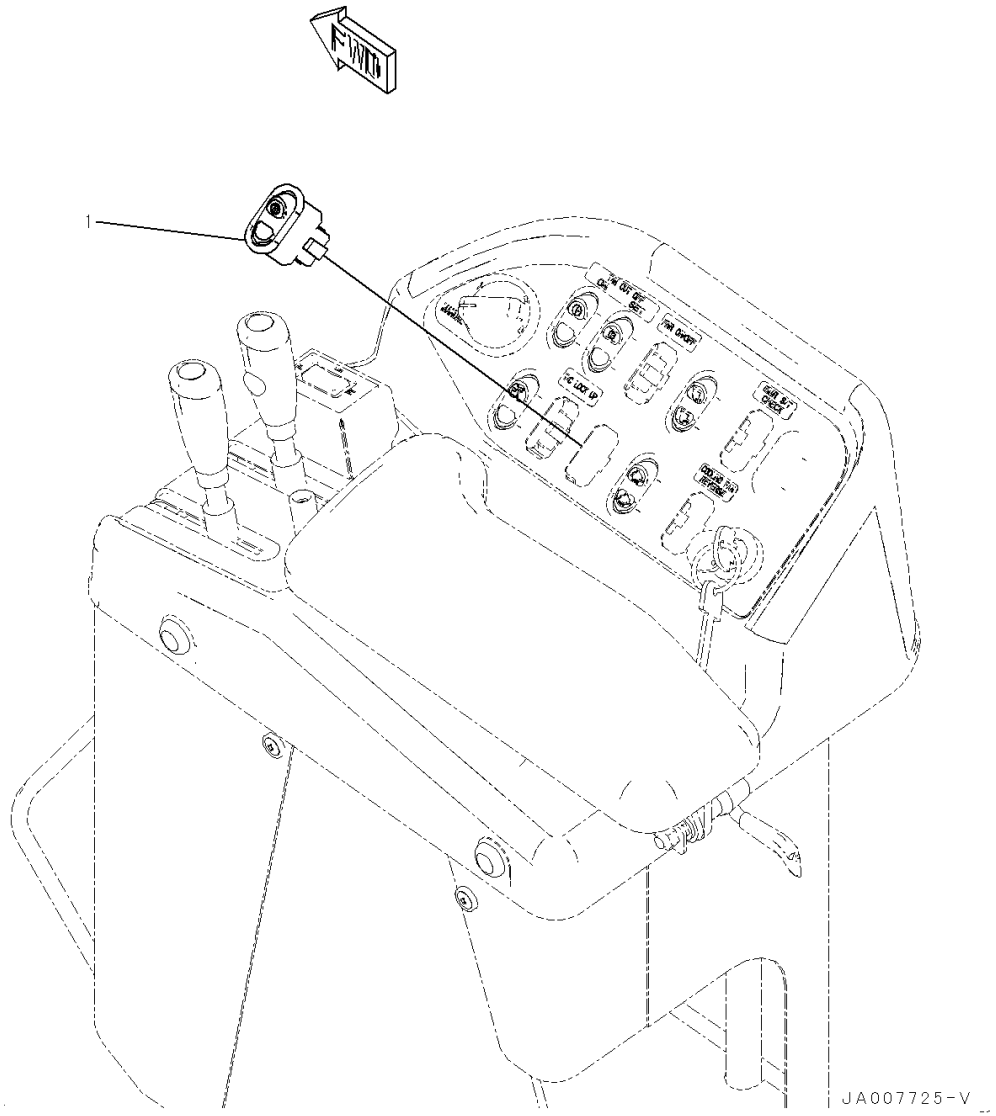

Index	Code	Part Number	Description	Qty	Serial Number
1		424-06-43350	Switch, Low Idle Up	1	90216-

FIG. K4205-018001 Switch (With Torque Converter, Lockup Type)

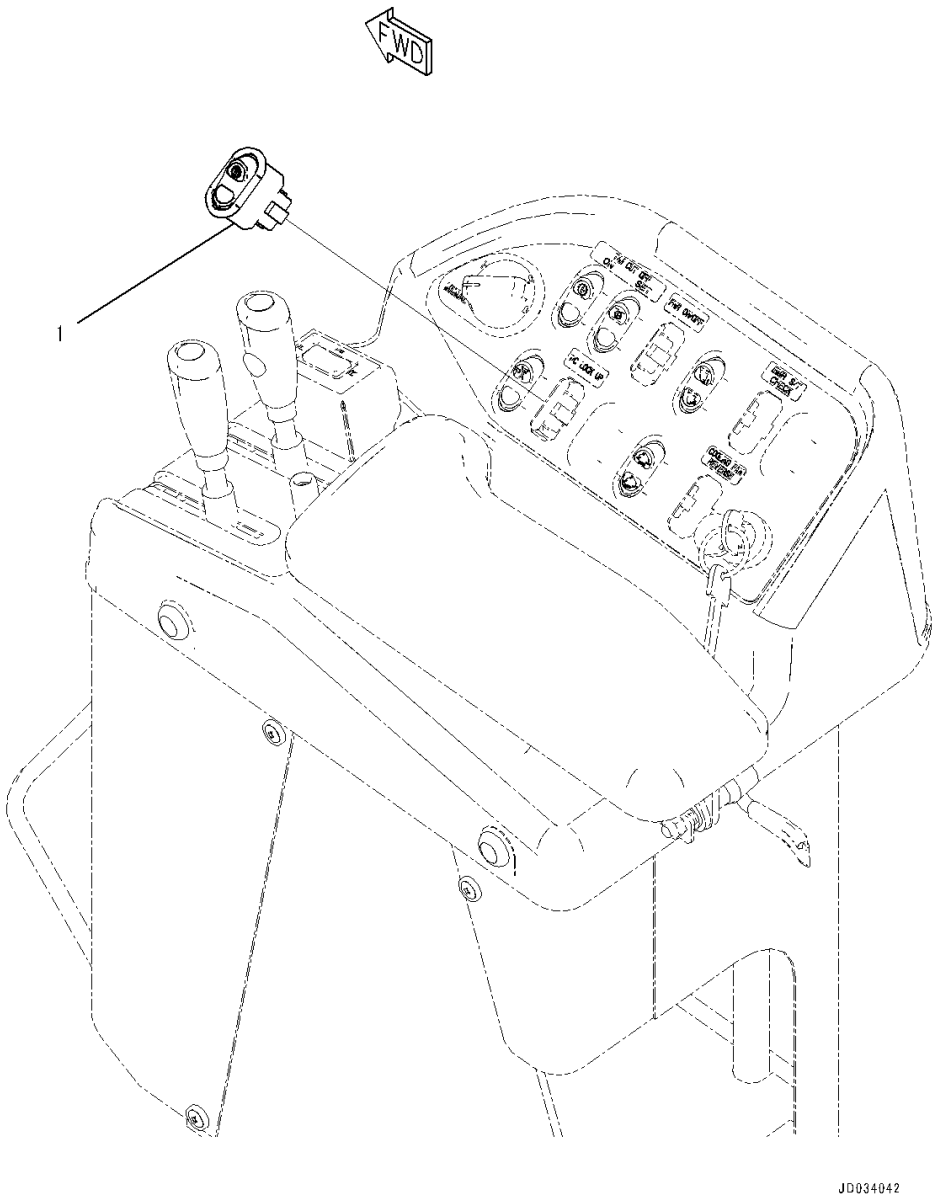

Index	Code	Part Number	Description	Qty	Serial Number
1		423-06-45530	Switch, Torque Converter Lockup	1	90216-

FIG. K4205-017001 Switch (With Automatic Reversible Cooling Fan)

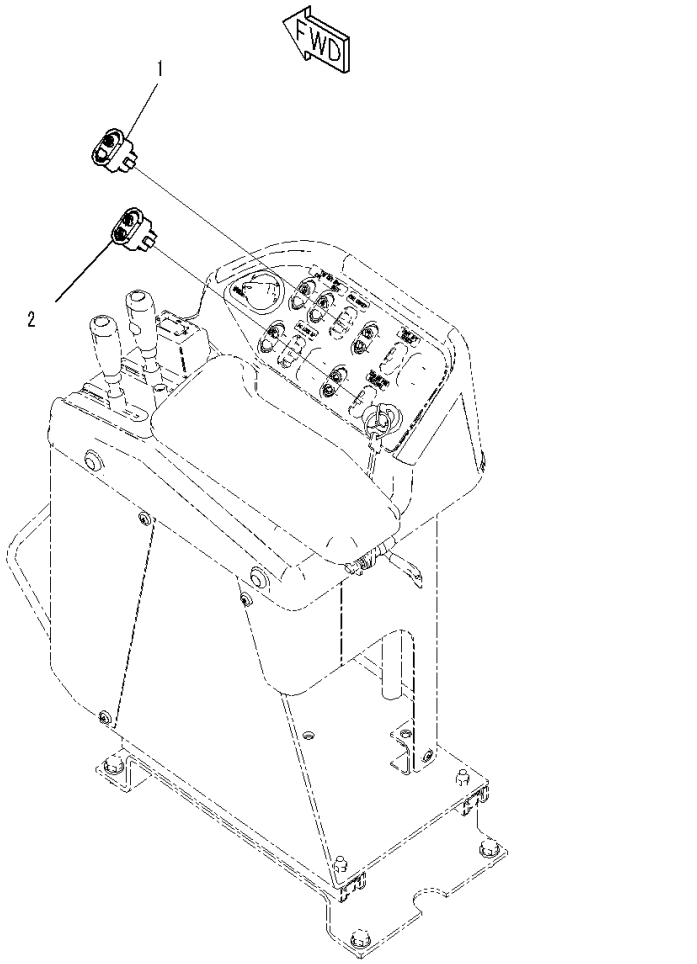

Index	Code	Part Number	Description	Qty	Serial Number
1		423-06-45480	Switch	1	90216-
2		423-06-45560	Switch	1	90216-

FIG. K4205-001001 Switch (With ECSS)

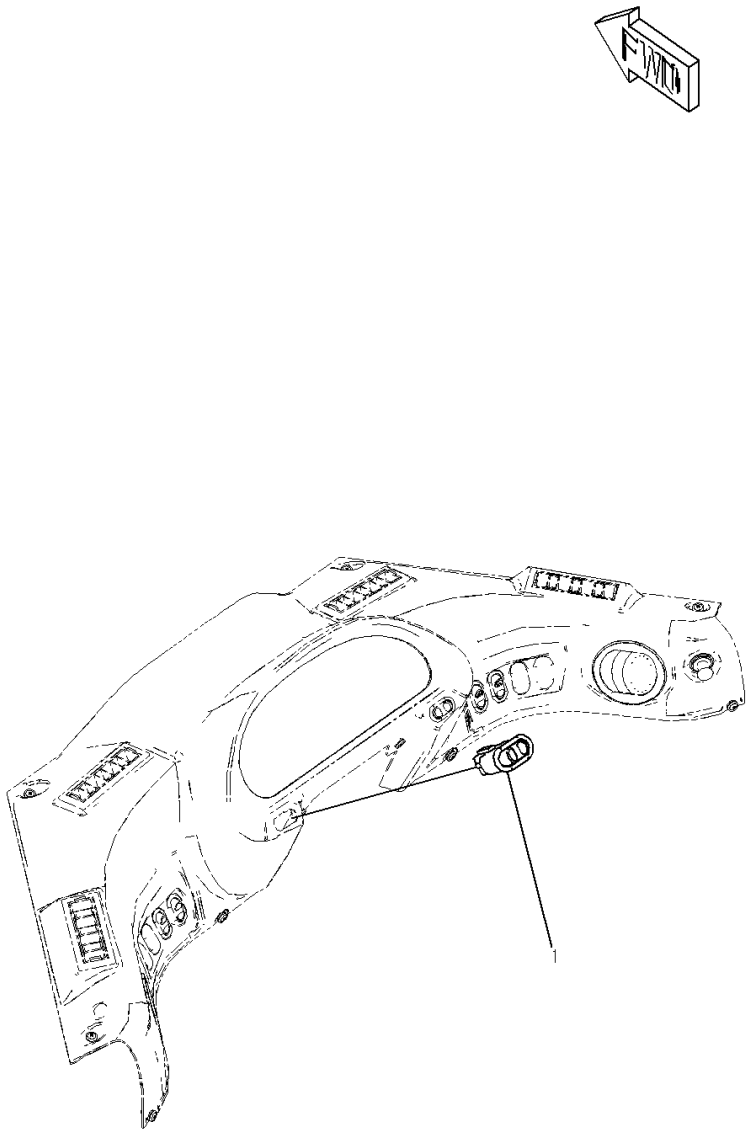

Index	Code	Part Number	Description	Qty	Serial Number
1		423-06-45380	Switch, E.C.S.S.	1	90216-

FIG. K4205-002001 Switch (With ECSS, Torque Converter, Lockup Type)

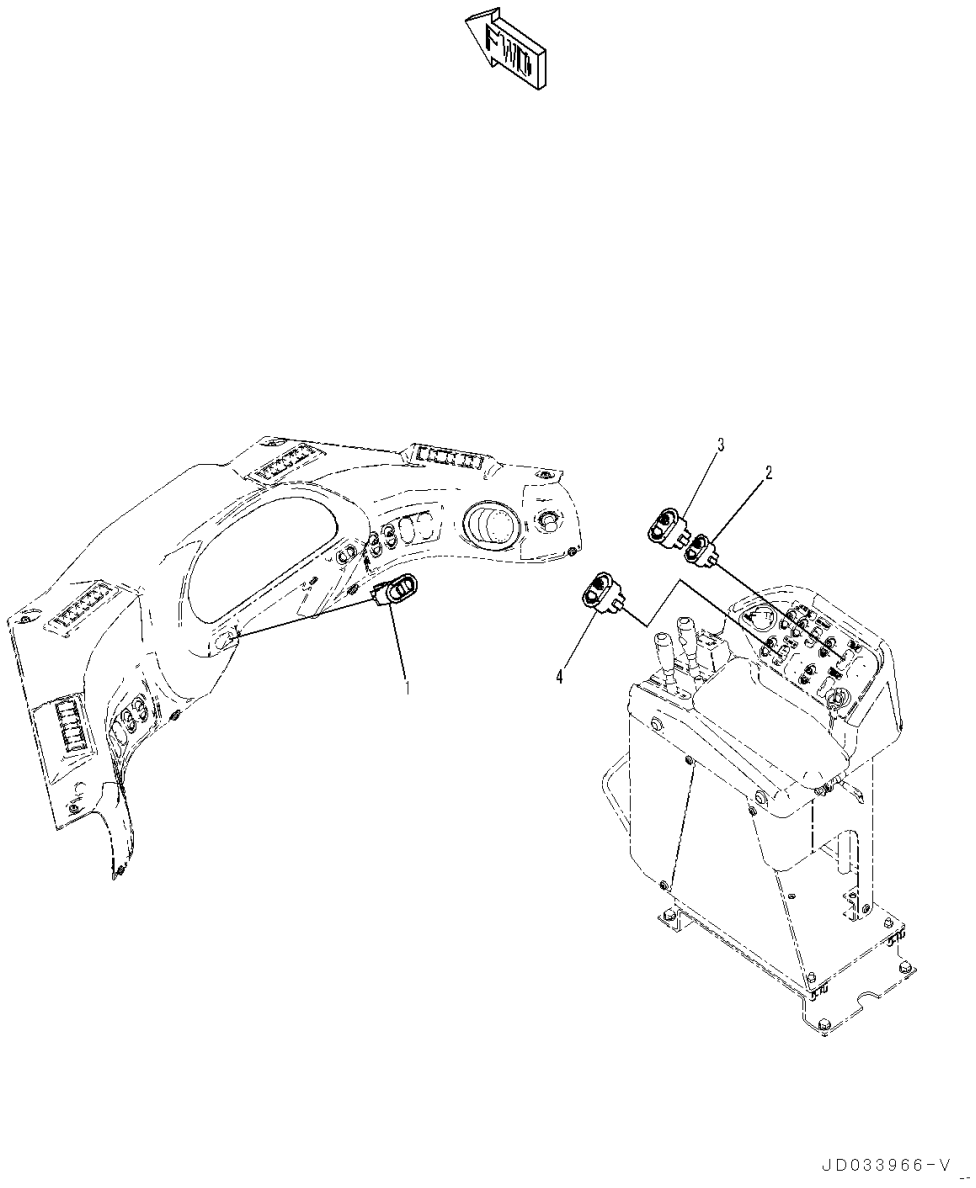

Index	Code	Part Number	Description	Qty	Serial Number
1		423-06-45380	Switch, E.C.S.S.	1	90216-
2		423-06-45510	Switch, Emergency Steering	1	90216-
3		423-06-45480	Switch	1	90216-
4		423-06-45530	Switch, Torque Converter Lockup	1	90216-

FIG. K4205-011001 Switch (With ECSS, Torque Converter, Lockup Type, Automatic Reversible Cooling Fan)

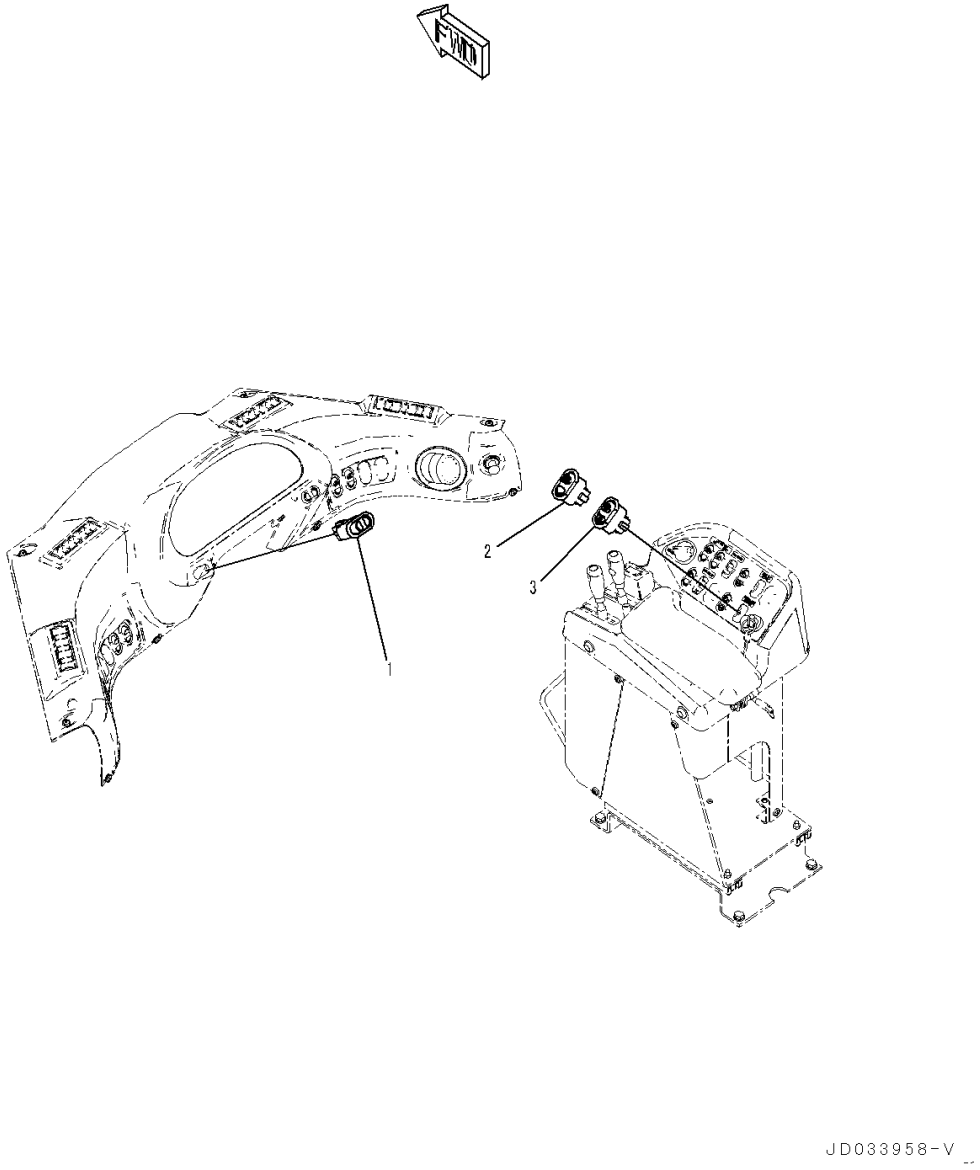

Index	Code	Part Number	Description	Qty	Serial Number
1		423-06-45380	Switch, E.C.S.S.	1	90216-
2		423-06-45530	Switch, Torque Converter Lockup	1	90216-
3		423-06-45560	Switch	1	90216-

FIG. K4205-008001 Switch (With ECSS, Automatic Reversible Cooling Fan)

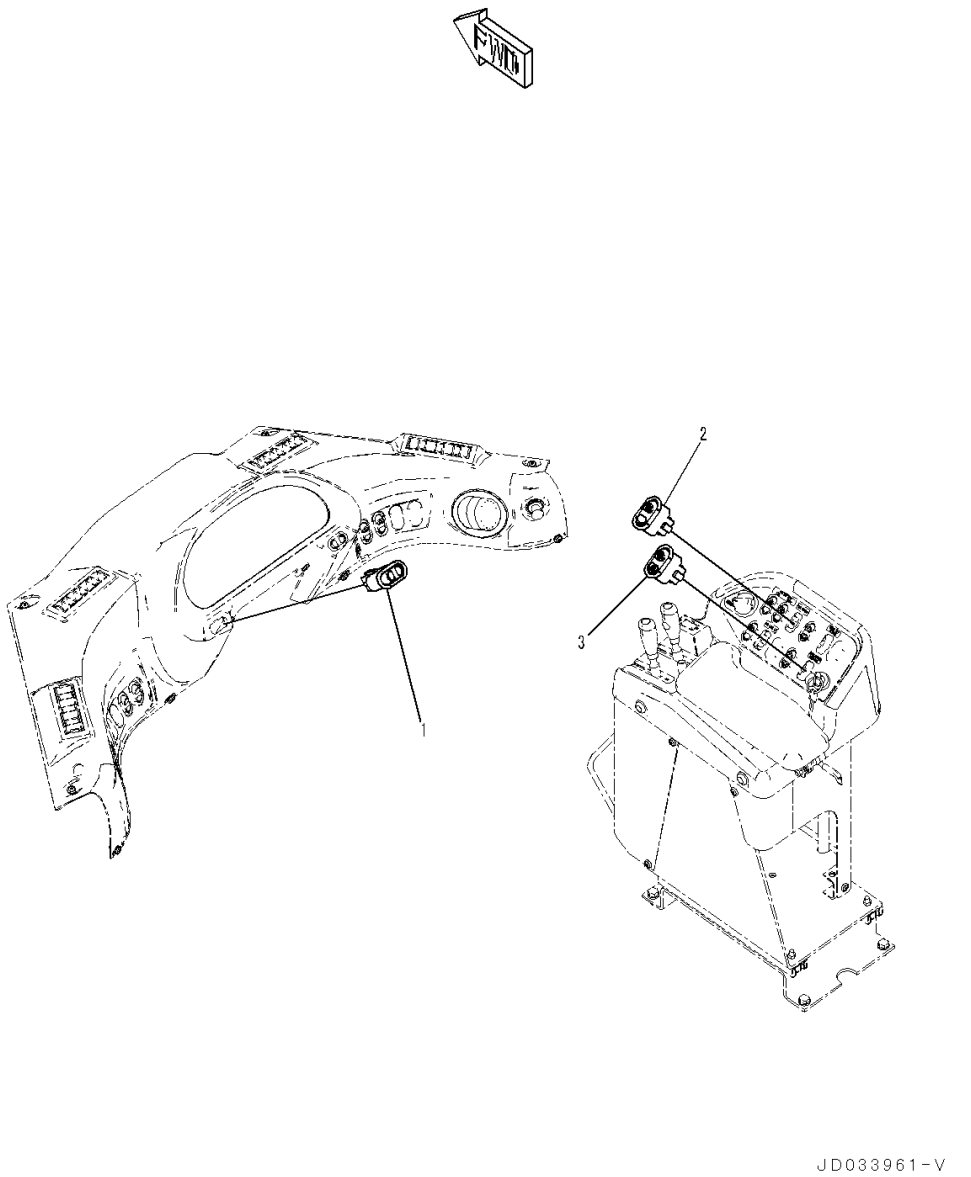

Index	Code	Part Number	Description	Qty	Serial Number
1		423-06-45380	Switch, E.C.S.S.	1	90216-
2		423-06-45480	Switch	1	90216-
3		423-06-45560	Switch	1	90216-

FIG. K4205-003001 Switch (With ECSS, Automatic Reversible Cooling Fan, Without Multi-function Mono Lever, Forward Reverse Switch)

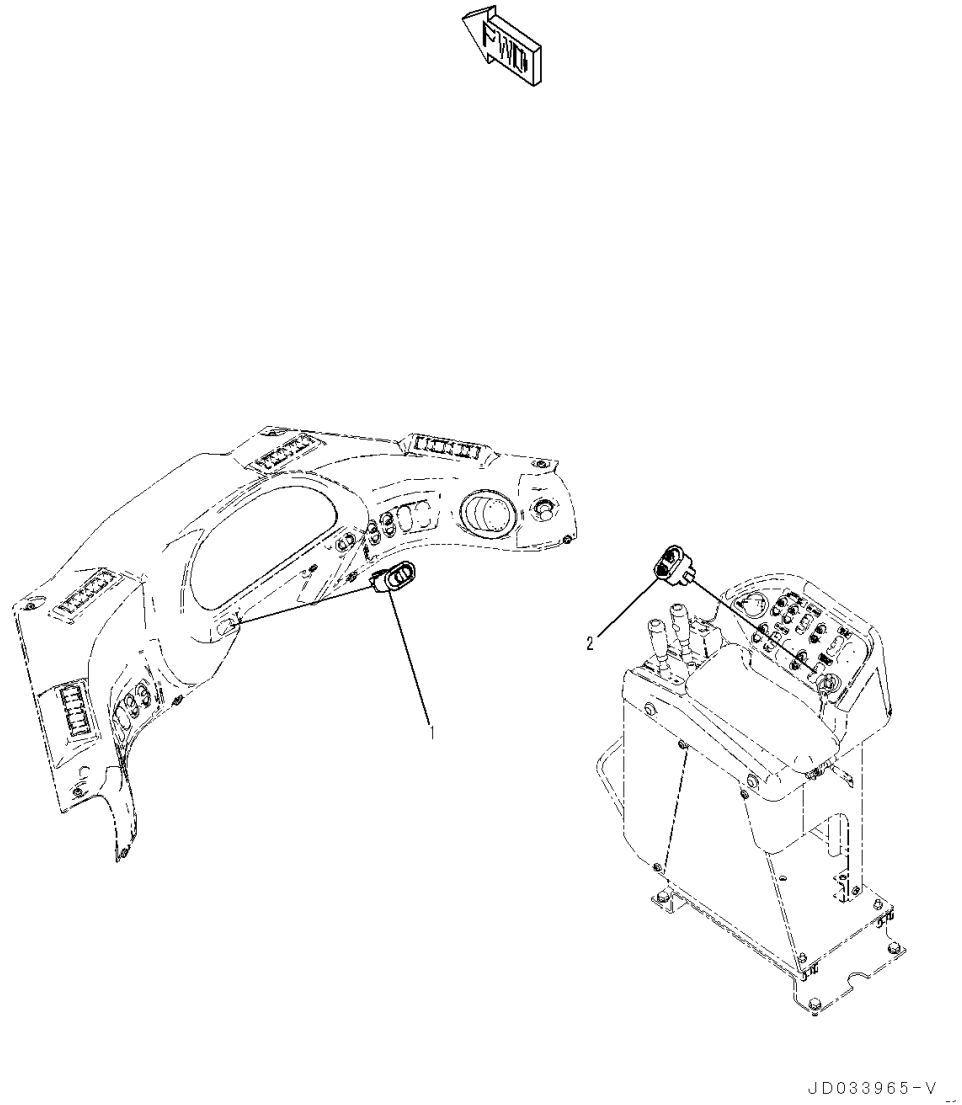

Index	Code	Part Number	Description	Qty	Serial Number
1		423-06-45380	Switch, E.C.S.S.	1	90216-
2		423-06-45560	Switch	1	90216-

FIG. K4205-006001 Switch (With ECSS, Emergency Steering, Automatic Control Type)

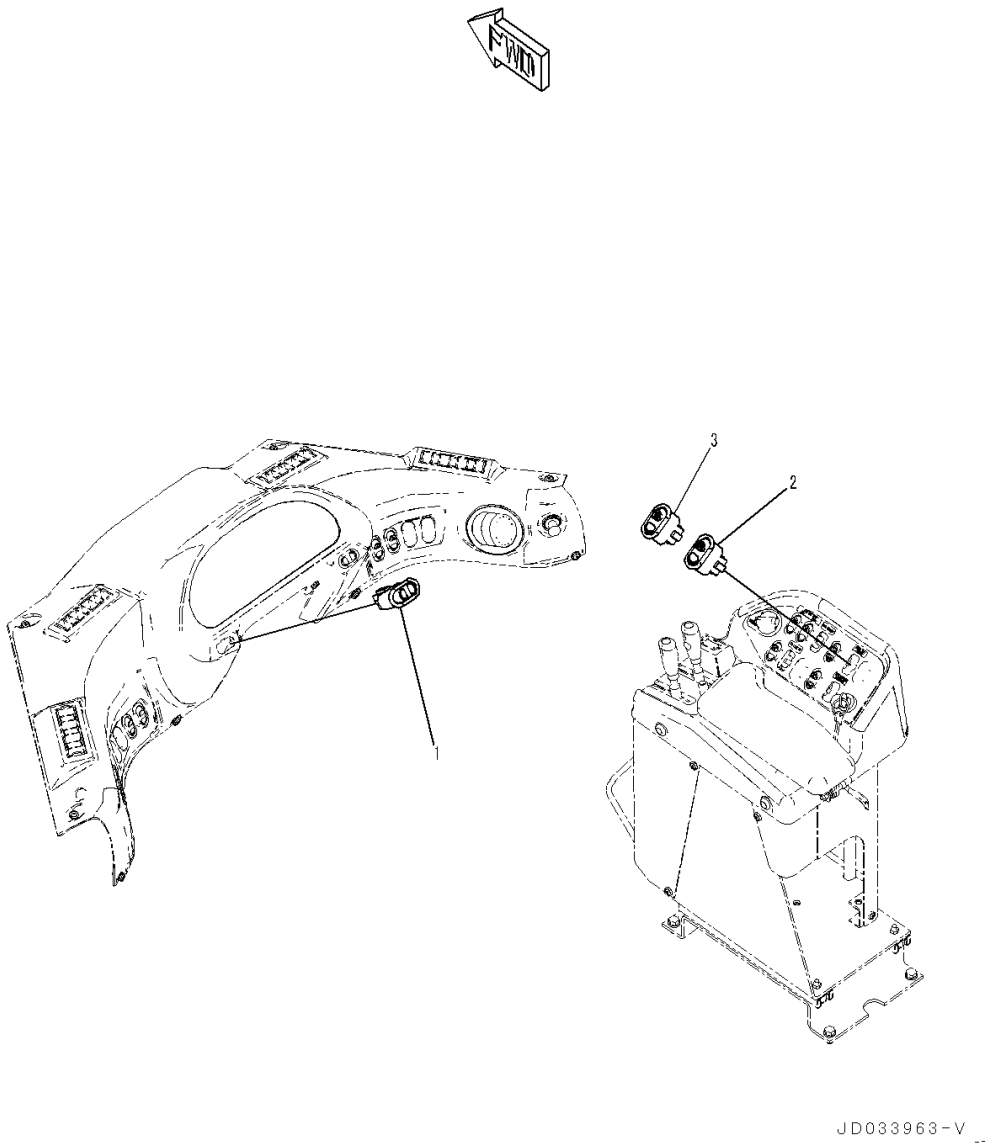

Index	Code	Part Number	Description	Qty	Serial Number
1		423-06-45380	Switch, E.C.S.S.	1	90216-
2		423-06-45510	Switch, Emergency Steering	1	90216-
3		423-06-45480	Switch	1	90216-

FIG. K4205-004001 Switch (With ECSS, Emergency Steering, Automatic Control Type, Without Multi-function Mono Lever, Forward Reverse Switch)

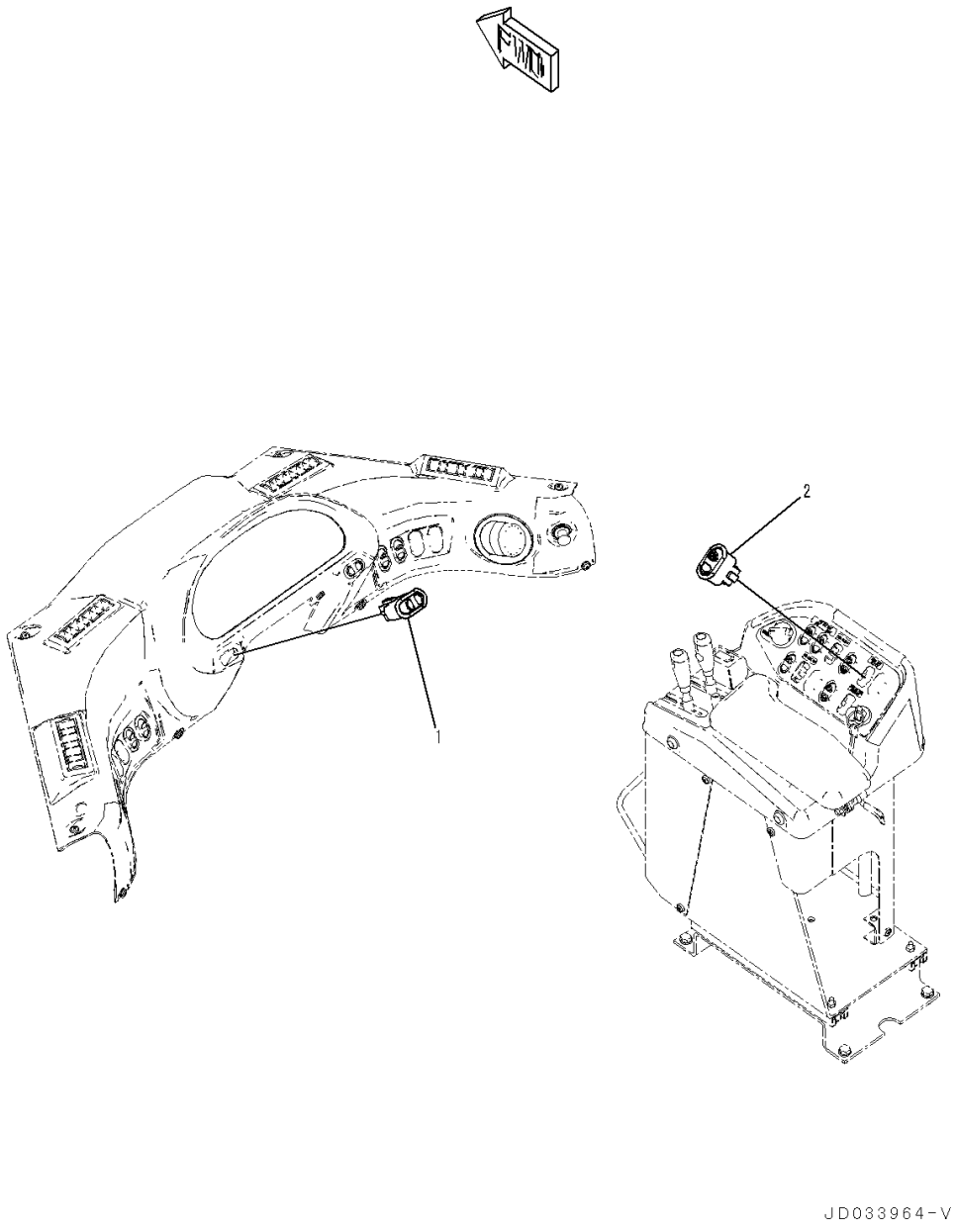

Index	Code	Part Number	Description	Qty	Serial Number
1		423-06-45380	Switch, E.C.S.S.	1	90216-
2		423-06-45510	Switch, Emergency Steering	1	90216-

FIG. K4205-005001 Switch (With ECSS, Emergency Steering, Automatic Control Type, Torque Converter, Lockup Type)

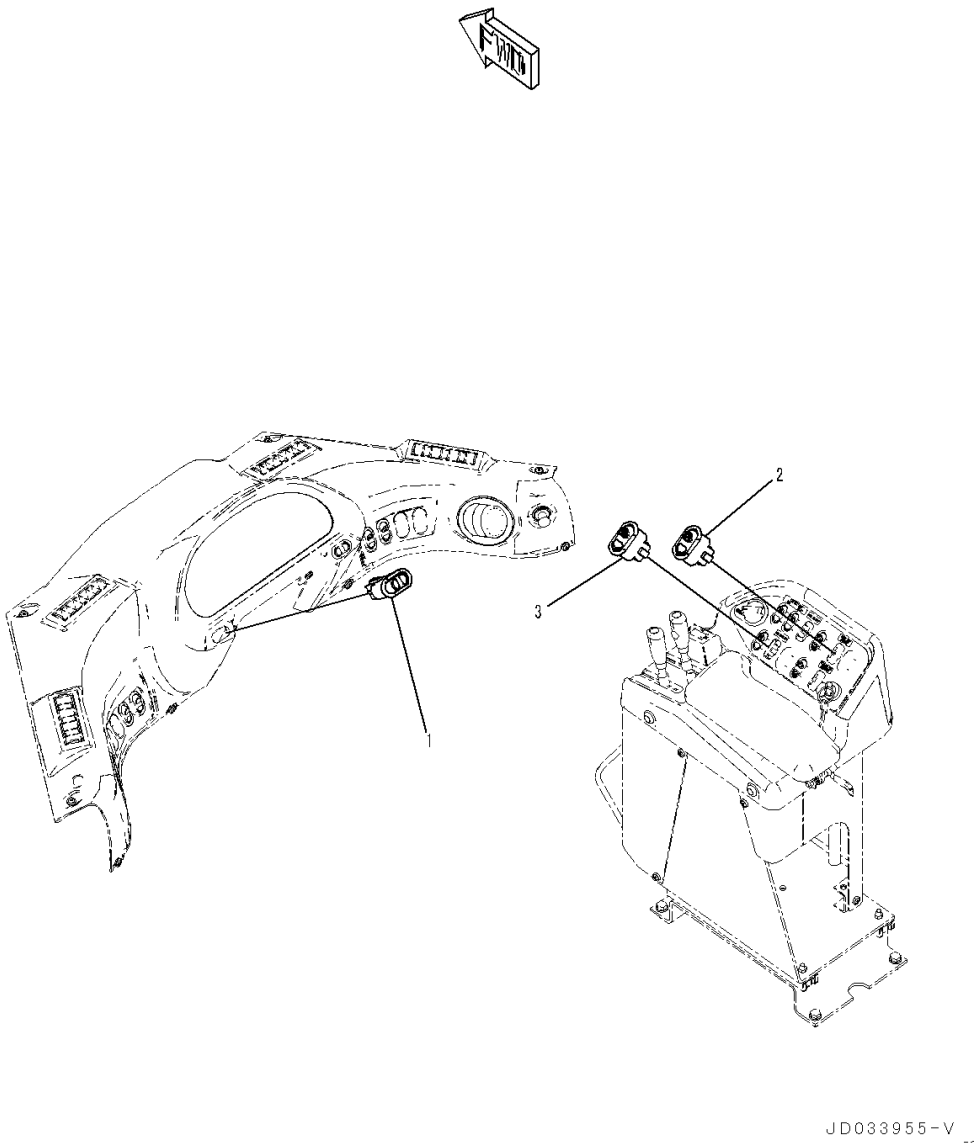

Index	Code	Part Number	Description	Qty	Serial Number
1		423-06-45380	Switch, E.C.S.S.	1	90216-
2		423-06-45510	Switch, Emergency Steering	1	90216-
3		423-06-45530	Switch, Torque Converter Lockup	1	90216-

FIG. K4205-016001 Switch (With ECSS, Emergency Steering, Automatic Control Type, Torque Converter, Lockup Type, Automatic Reversible Cooling Fan)

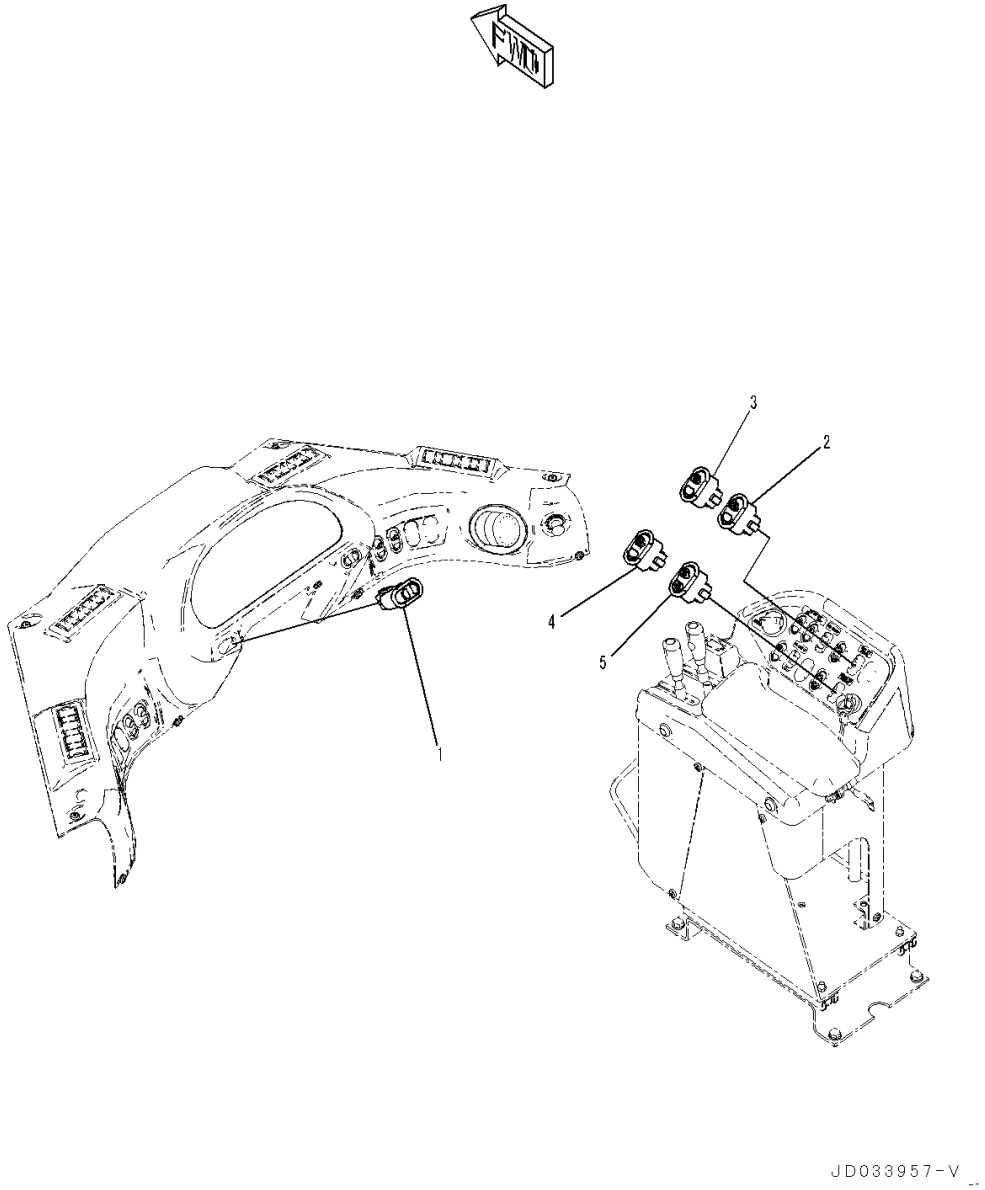

Index	Code	Part Number	Description	Qty	Serial Number
1		423-06-45380	Switch, E.C.S.S.	1	90216-
2		423-06-45510	Switch, Emergency Steering	1	90216-
3		423-06-45480	Switch	1	90216-
4		423-06-45530	Switch, Torque Converter Lockup	1	90216-
5		423-06-45560	Switch	1	90216-

FIG. K4205-009001 Switch (With ECSS, Emergency Steering, Automatic Control Type, Torque Converter, Lockup Type, Automatic Reversible Cooling Fan, Without Multi-function Mono Lever, Forward Reverse Switch)

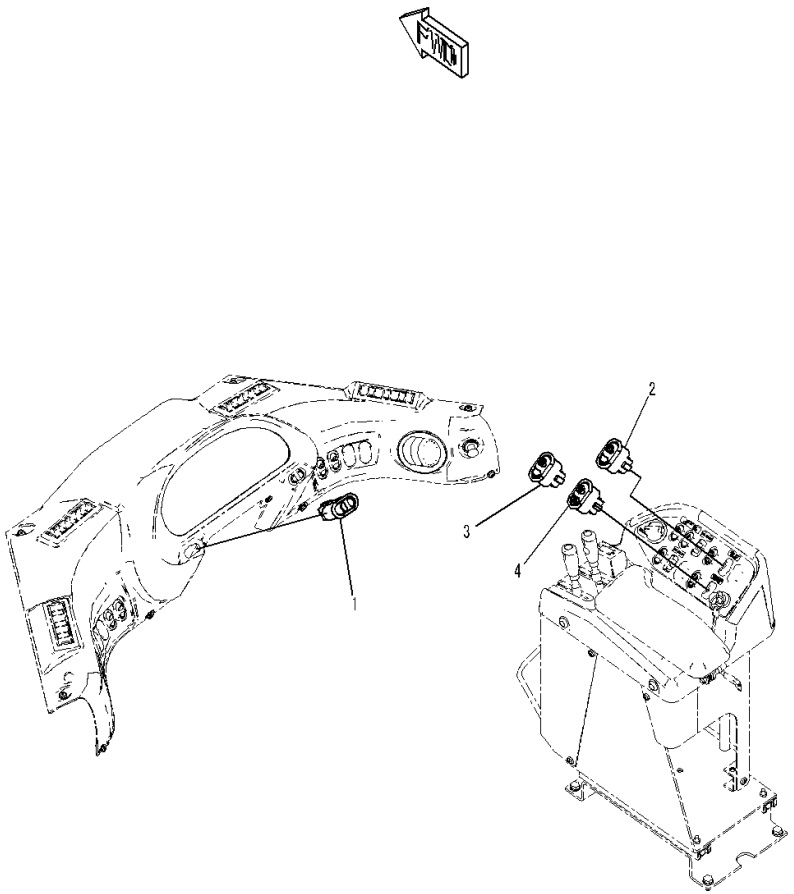

Index	Code	Part Number	Description	Qty	Serial Number
1		423-06-45380	Switch, E.C.S.S.	1	90216-
2		423-06-45510	Switch, Emergency Steering	1	90216-
3		423-06-45530	Switch, Torque Converter Lockup	1	90216-
4		423-06-45560	Switch	1	90216-

FIG. K4205-010001 Switch (With ECSS, Emergency Steering, Automatic Control Type, Automatic Reversible Cooling Fan)

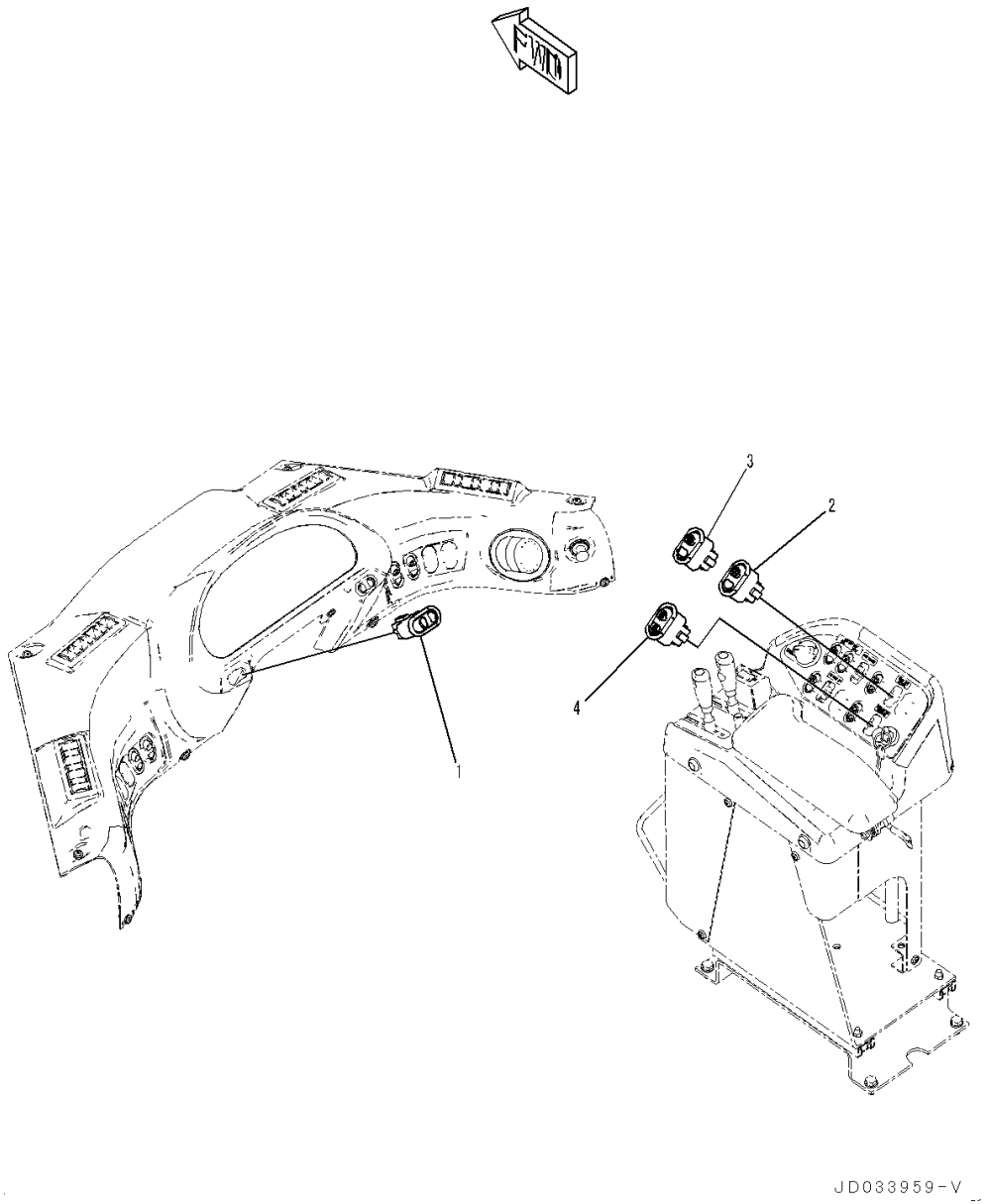

Index	Code	Part Number	Description	Qty	Serial Number
1		423-06-45380	Switch, E.C.S.S.	1	90216-
2		423-06-45510	Switch, Emergency Steering	1	90216-
3		423-06-45480	Switch	1	90216-
4		423-06-45560	Switch	1	90216-

FIG. K4205-007001 Switch (With ECSS, Emergency Steering, Automatic Control Type, Automatic Reversible Cooling Fan, Without Multi-function Mono Lever, Forward Reverse Switch)

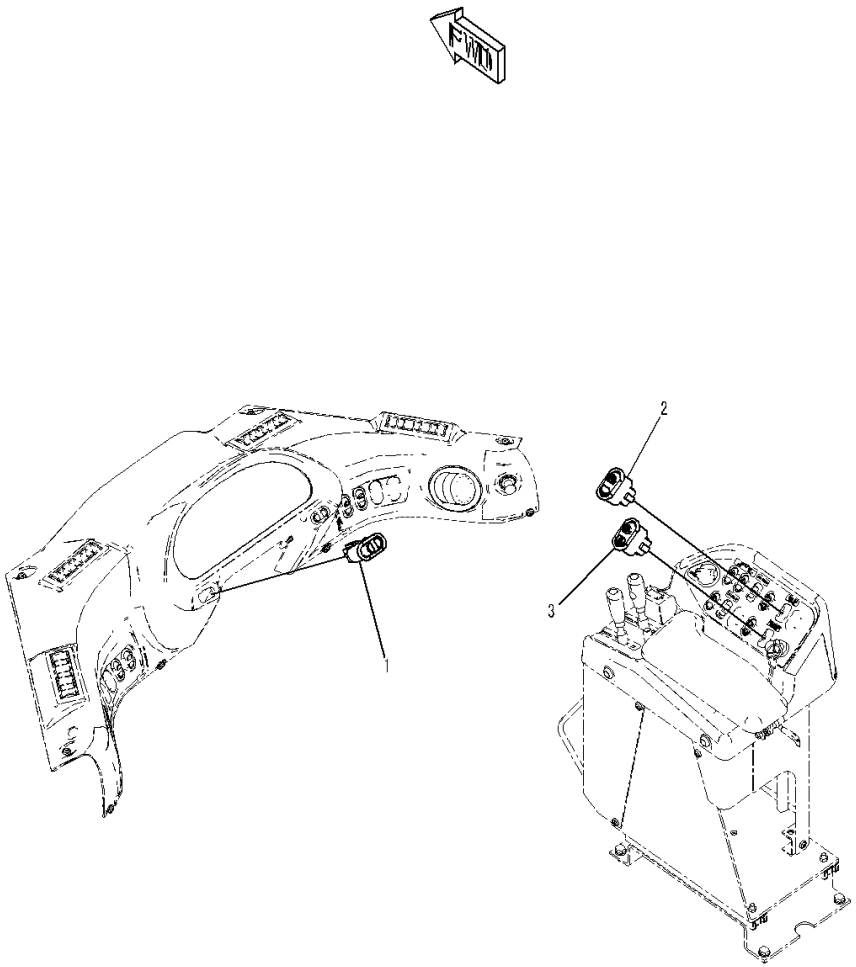

Index	Code	Part Number	Description	Qty	Serial Number
1		423-06-45380	Switch, E.C.S.S.	1	90216-
2		423-06-45510	Switch, Emergency Steering	1	90216-
3		423-06-45560	Switch	1	90216-

FIG. K4208-004001 KOMTRAX Less

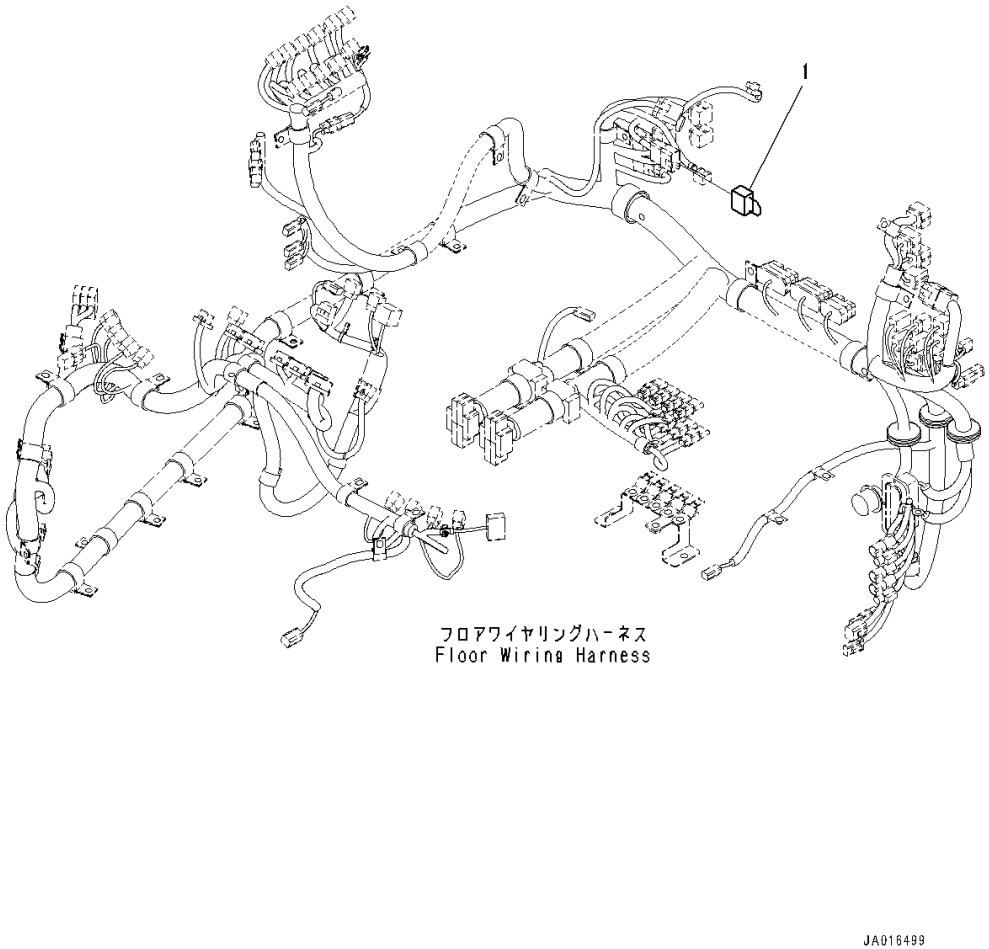

Index	Code	Part Number	Description	Qty	Serial Number
1		421-06-31410	Wiring Harness	1	90216-

FIG. K4208-002001 KOMTRAX Controller

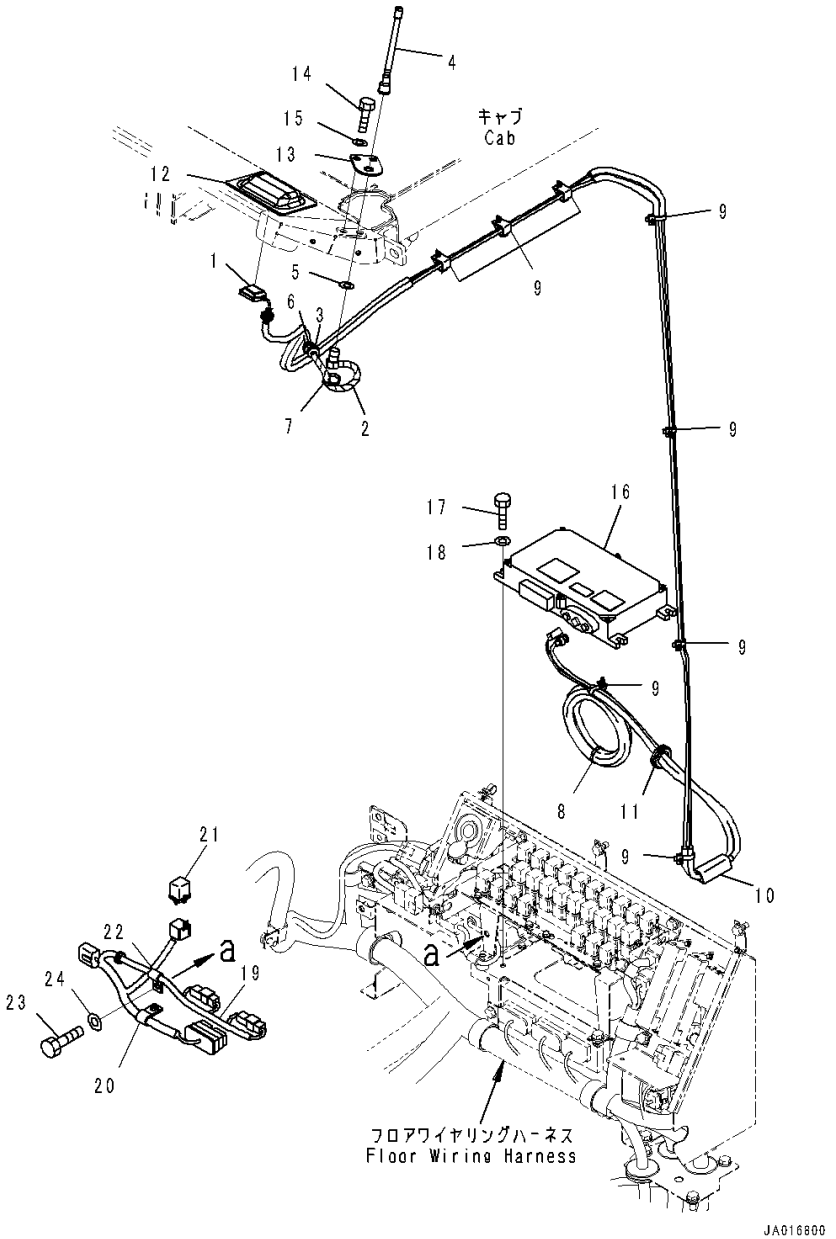

Index	Code	Part Number	Description	Qty	Serial Number
1		423-06-45312	Antenna Assembly	1	90216-
2		423-06-45332	Cable Assembly	1	90216-
3		08037-10610	• Grommet	1	90216-
4		8A13-10-2100	Antenna	1	90216-
5		01640-21626	Washer, Flat	1	90216-
6		175-06-81610	Grommet	1	90216-
7		08034-40521	Band	1	90216-
8		08034-20519	Band	1	90216-
9		08059-00515	Clip	8	90216-
10		423-925-4980	Duct	1	90216-
11		08037-02512	Grommet	1	90216-
12		425-926-3921	Cover	1	90216-
13		426-06-32791	Plate	1	90216-
14		01010-81020	Bolt	2	90216-
15		01643-31032	Washer	2	90216-
16		7826-20-7038	Controller, KOMTRAX	1	90216-
17		01010-80825	Bolt	4	90216-
18		01643-30823	Washer	4	90216-
19		423-06-45343	Wiring Harness	1	90216-
20		04434-51410	Clip	1	90216-
21		569-06-61960	Relay	1	90216-
22		04434-51010	Clip	1	90216-
23		01010-81016	Bolt	1	90216-
24		01643-31032	Washer	1	90216-

FIG. K4208-005001 KOMTRAX Controller (GPRS)

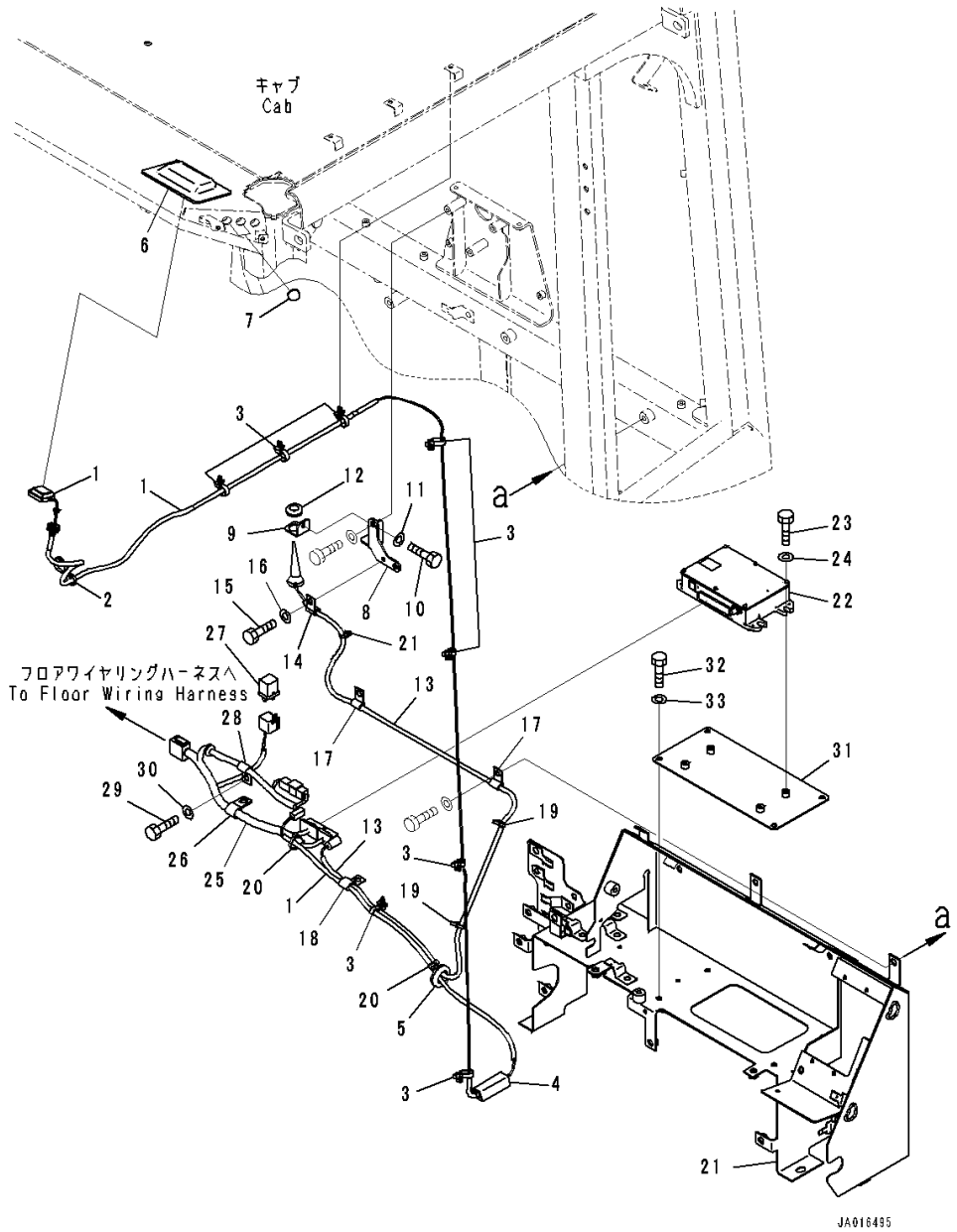

Index	Code	Part Number	Description	Qty	Serial Number
1		423-06-45312	Antenna Assembly	1	90216-
2		08034-40521	Band	1	90216-
3		08059-00515	Clip	8	90216-
4		423-925-4980	Duct	1	90216-
5		08037-02512	Grommet	1	90216-
6		425-926-3921	Cover	1	90216-
7		09415-01008	Cap	2	90216-
8		423-06-47450	Bracket	1	90216-
9		423-06-47460	Plate	1	90216-
10		01010-80616	Bolt	1	90216-
11		01643-30623	Washer	1	90216-
12		08037-01610	Grommet	1	90216-
13		423-06-47470	Antenna Assembly	1	90216-
14		04434-50808	Clip	1	90216-
15		01010-80616	Bolt	1	90216-
16		01643-30623	Washer	1	90216-
17		04434-50810	Clip	2	90216-
18		04435-50810	Clip	1	90216-
19		08034-40521	Band	3	90216-
20		08034-20519	Band	2	90216-
21		423-06-47480	Bracket	1	90216-
22		7826-25-5302	Controller, KOMTRAX	1	90216-
23		01010-80620	Bolt	4	90216-
24		01643-30623	Washer	4	90216-
25		423-06-47440	Wiring Harness	1	90216-
26		04434-51410	Clip	1	90216-
27		569-06-61960	Relay	1	90216-
28		04434-51010	Clip	1	90216-
29		01010-81016	Bolt	1	90216-
30		01643-31032	Washer	1	90216-
31		423-06-47420	Bracket	1	90216-
32		01010-80816	Bolt	4	90216-
33		01643-30823	Washer	4	90216-

FIG. K4211-001001 Steering Wheel

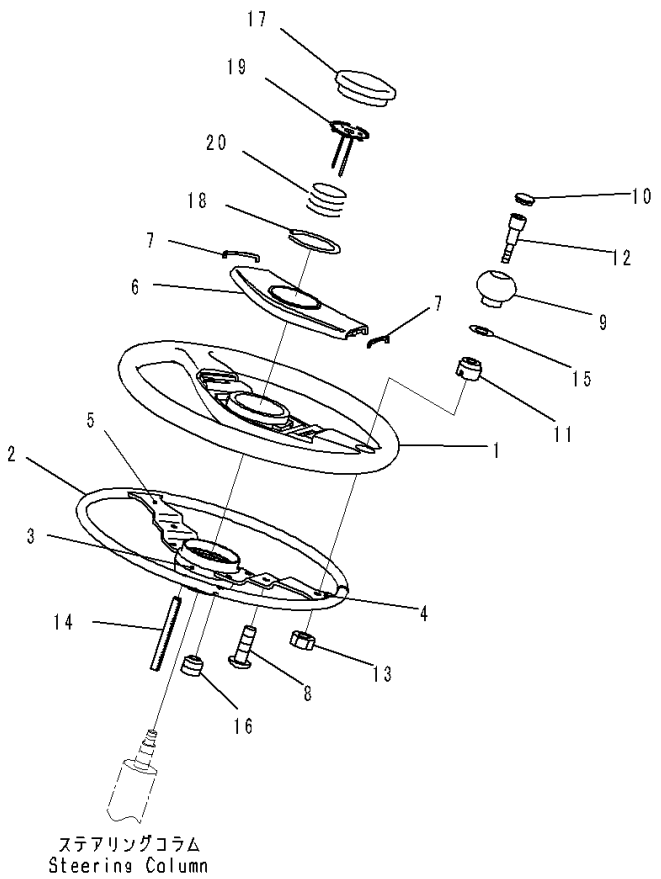

Index	Code	Part Number	Description	Qty	Serial Number
		421-40-42211	Steering Wheel Assembly	1	90646-
		421-40-42220	• Wheel	1	90216-
1		421-40-42350	• • Steering Wheel Assembly	1	90216-
2		421-40-42310	• • • Insert Assembly	1	90216-
3		421-40-42320	• • • • Boss	1	90216-
4		421-40-42330	• • • • Plate	1	90216-
5		421-40-42340	• • • • Plate	1	90216-
		421-40-42360	• • Cover Assembly	1	90216-
6	C1		• • • Cover	1	90216-
7		421-40-42380	• • • Seal	2	90216-
8		421-40-42390	• • Screw	6	90216-
9		421-40-42410	• • Knob	1	90216-
10		421-40-42420	• • Cap	1	90216-
11		421-40-42430	• • Bushing	1	90216-
12		421-40-42440	• • Bolt	1	90216-
13		421-40-42450	• • Nut	1	90216-
14		421-40-42460	• • Pin	1	90216-
15		421-40-42470	• • Washer	1	90216-
16		421-40-42480	• • Screw	3	90216-
		421-40-42230	• Pad Assembly	1	90216-
17		421-40-42510	• • Pad	1	90216-
18		421-40-42520	• • Spring, Lock	1	90216-
		421-40-42240	• Needle Assembly	1	90216-
19		421-40-42530	• • Needle	1	90216-
20		421-40-42540	• • Spring	1	90216-

FIG. K4212-001001 Rear Console Cover (Without Printer Type Payload Meter) (Cover)

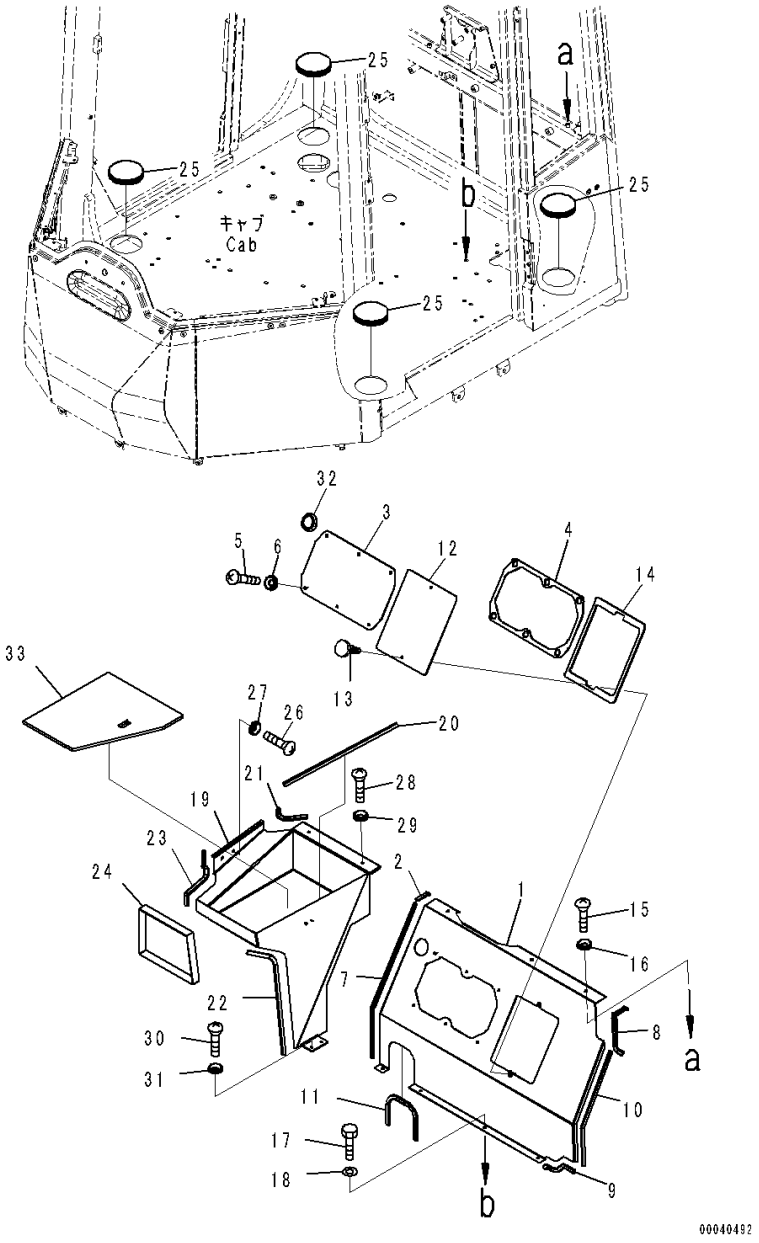

Index	Code	Part Number	Description	Qty	Serial Number
1		423-54-42342	Cover	1	90216-
2		423-54-32340	Finisher	1	90216-
3		423-54-42320	Cover	1	90216-
4		423-54-42720	Sheet	1	90216-
5		01225-70616	Screw, Philips Head	6	90216-
6		418-926-3490	Washer	6	90216-
7		423-54-32391	Finisher	1	90216-
8		423-54-42870	Finisher	1	90216-
9		423-54-42990	Finisher	1	90216-
10		423-54-32540	Finisher	1	90216-
11		423-54-42650	Finisher	1	90216-
12		423-54-42330	Cover	1	90216-
13		421-09-21260	Screw	2	90216-
14		423-54-42490	Sheet	1	90216-
15		01225-70612	Screw, Philips Head	3	90216-
16		418-926-3490	Washer	3	90216-
17		01010-80620	Bolt	4	90216-
18		01643-30623	Washer	4	90216-
19		423-54-42361	Bracket	1	90216-
20		423-54-42660	Finisher	1	90216-
21		423-54-42380	Finisher	1	90216-
22		423-54-42670	Finisher	1	90216-
23		423-54-42680	Finisher	1	90216-
24		423-54-42790	Band	1	90216-
25		423-43-38330	Grommet	4	90216-
26		01225-70620	Screw, Philips Head	2	90216-
27		418-926-3490	Washer	2	90216-
28		01225-70610	Screw, Philips Head	2	90216-
29		418-926-3490	Washer	2	90216-
30		01225-70620	Screw, Philips Head	2	90216-
31		418-926-3490	Washer	2	90216-
32		423-54-48470	Cap	1	90216-
33		425-54-32571	Sheet	1	90216-

FIG. K4409-001001 Electric Converter For 12volt Power Source

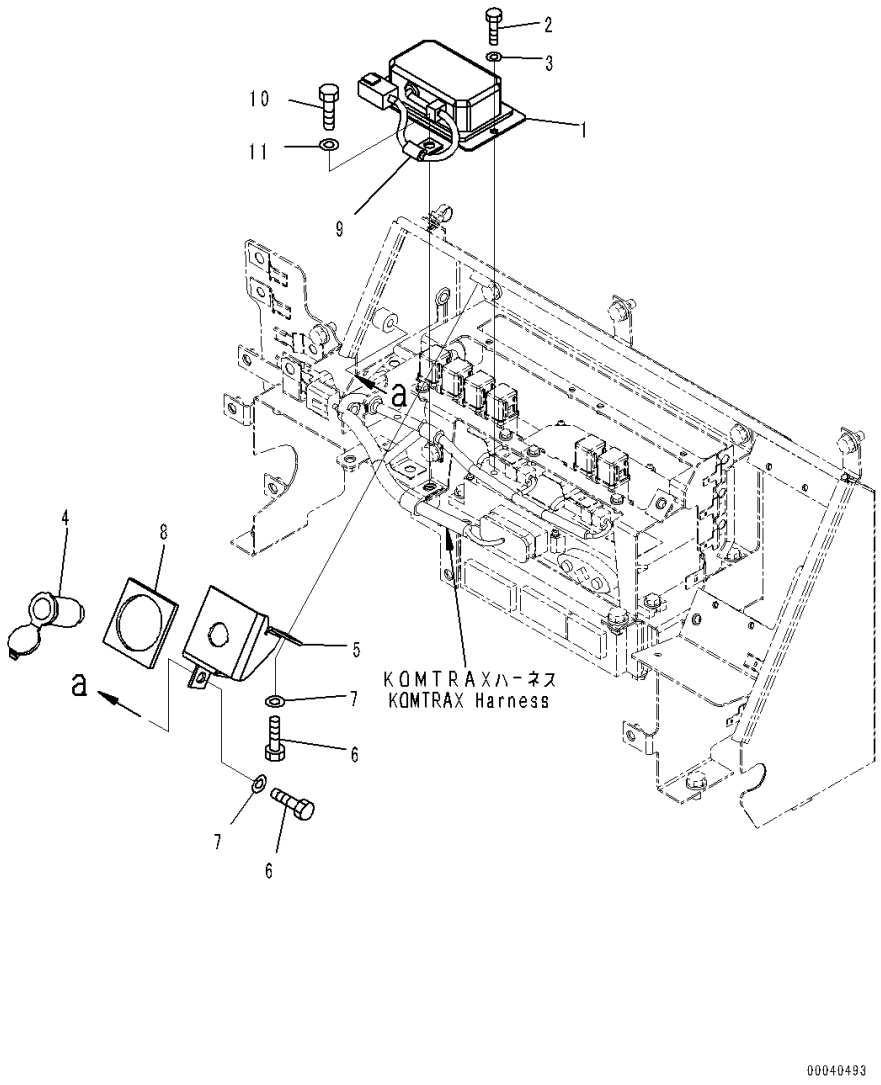

Index	Code	Part Number	Description	Qty	Serial Number
1		22U-06-22251	Converter	1	90216-
2		01010-80616	Bolt	2	90216-
3		01643-30623	Washer	2	90216-
4		198-Z11-2640	Socket Assembly	1	90216-
5		423-06-42611	Bracket	1	90216-
6		01010-81020	Bolt	2	90216-
7		01643-31032	Washer	2	90216-
8		423-06-42871	Sheet	1	90216-
9		04434-50810	Clip	1	90216-
10		01010-81020	Bolt	1	90216-
11		01643-31032	Washer	1	90216-

FIG. K4460-007001 Brake Control (Bracket)

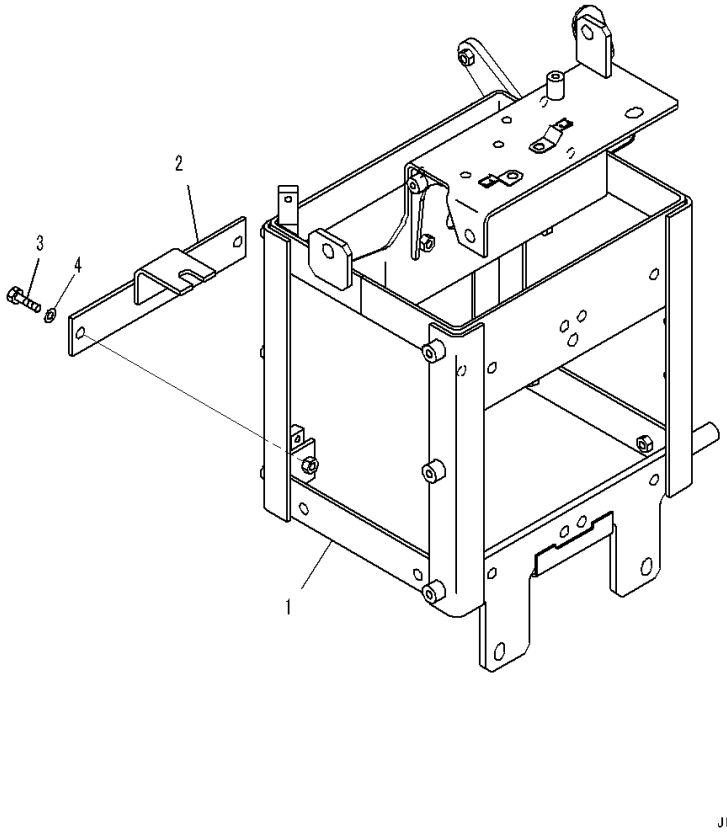

Index	Code	Part Number	Description	Qty	Serial Number
		Note: This list covers following specifications.			
		With Orbitrol Steering System			
		With Joystick Steering System			
		With Orbitrol Steering System, Brake Oil Cooling System			
1		421-43-47860	Bracket	1	90216-
2		421-43-47680	Bracket	1	90216-
3		01010-81230	Bolt	2	90216-
4		01643-31232	Washer	2	90216-

FIG. K4460-007002A Brake Control (Accumulator)

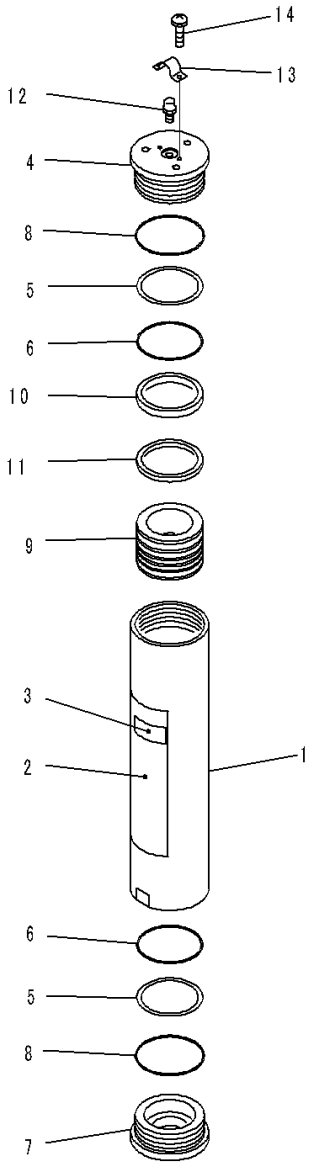

JY017643

Index	Code	Part Number	Description	Qty	Serial Number
		Note: This list covers following specifications.			
		With Orbitrol Steering System			
		With Joystick Steering System			
		721-32-08190	Accumulator Assembly, Final Coating	2	90216-
		721-32-10281	• Accumulator Assembly	1	90216-
1		721-10-10320	• Cylinder	1	90216-
2		721-89-10054	• Plate, Warning, Accumulator	1	90764-
3		721-89-10100	• Cover	1	90764-
4		721-29-10090	• Cover, Top	1	90216-
5		707-35-91020	• Ring, Back-up	2	90216-
6		07000-15090	• O-ring	2	90216-
7		721-26-10050	• Cover, End	1	90216-
8		07000-12100	• O-ring	2	90216-
9		721-36-10030	• Piston	1	90216-
10		721-47-12080	• Seal, Piston	1	90216-
11		721-47-12020	• Ring, Piston	1	90216-
12		721-89-12011	• Valve, Gas	1	90216-
13		707-88-45770	• Cover	1	90216-
14		707-88-81480	• Screw	2	90216-

FIG. K4460-007003 Brake Control (Mounting and Piping)

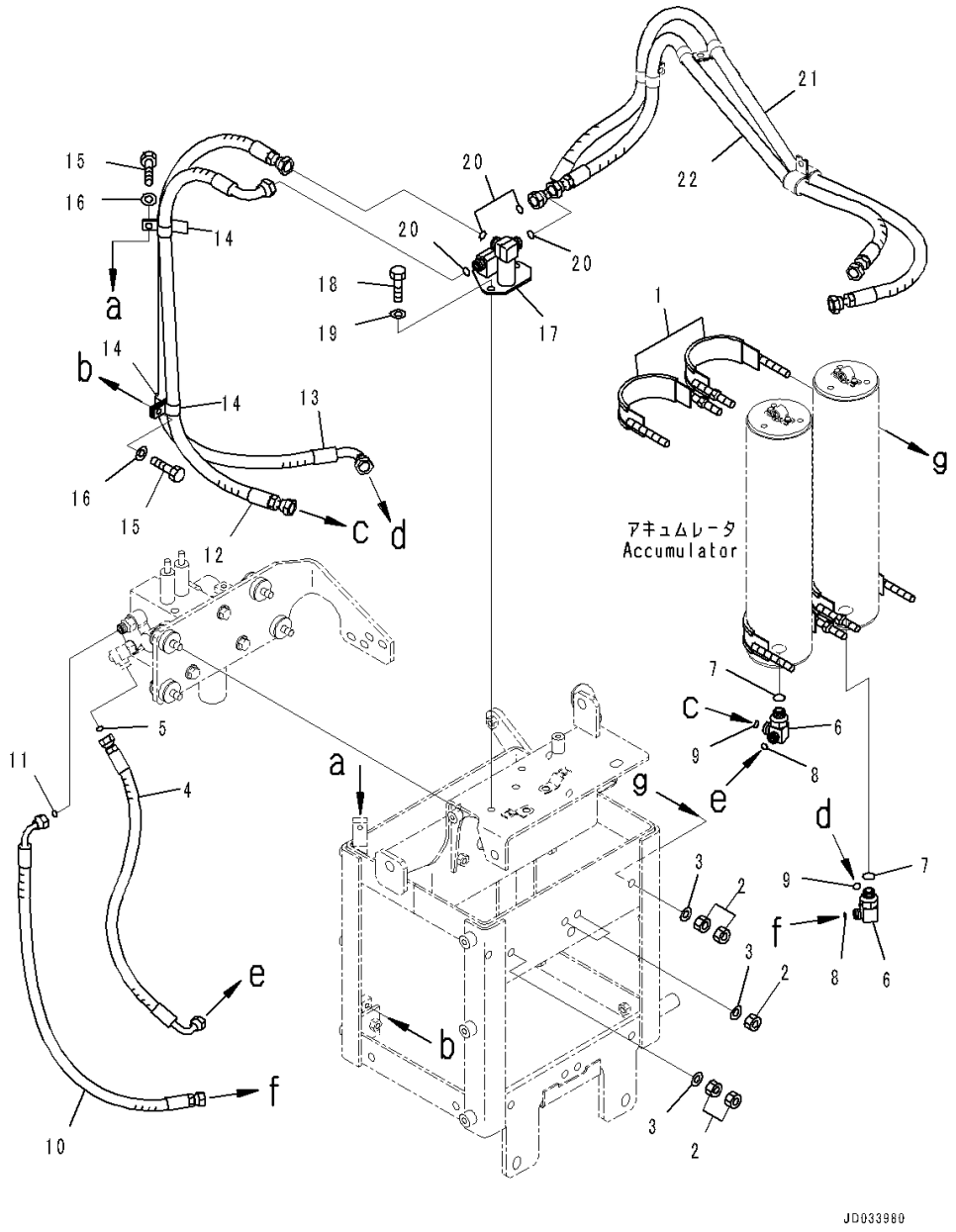

Index	Code	Part Number	Description	Qty	Serial Number
		Note: This list covers following specifications.			
		With Orbitrol Steering System			
		With Joystick Steering System			
		With Orbitrol Steering System, Brake Oil Cooling System			
1		421-43-22360	Band	4	90216-
2		421-40-12440	Nut	12	90216-
3		01643-31232	Washer	8	90216-
4		421-43-47810	Hose	1	90216-
5		02896-11009	O-ring	1	90216-
6		423-43-31350	Elbow	2	90216-
7		07002-12034	O-ring	2	90216-
8		02896-11009	O-ring	2	90216-
9		02896-11012	O-ring	2	90216-
10		421-43-47770	Hose	1	90216-
11		02896-11009	O-ring	1	90216-
12		421-43-47730	Hose	1	90216-
13		421-43-47710	Hose	1	90216-
14		04434-52110	Clip	4	90216-
15		01010-81025	Bolt	2	90216-
16		01643-31032	Washer	2	90216-
17		421-43-48340	Block	1	90216-
18		01010-81025	Bolt	2	90216-
19		01643-31032	Washer	2	90216-
20		02896-11012	O-ring	4	90216-
21		421-43-47740	Hose	1	90216-
22		421-43-47720	Hose	1	90216-

FIG. K4460-007004 Brake Control (PPC Piping)

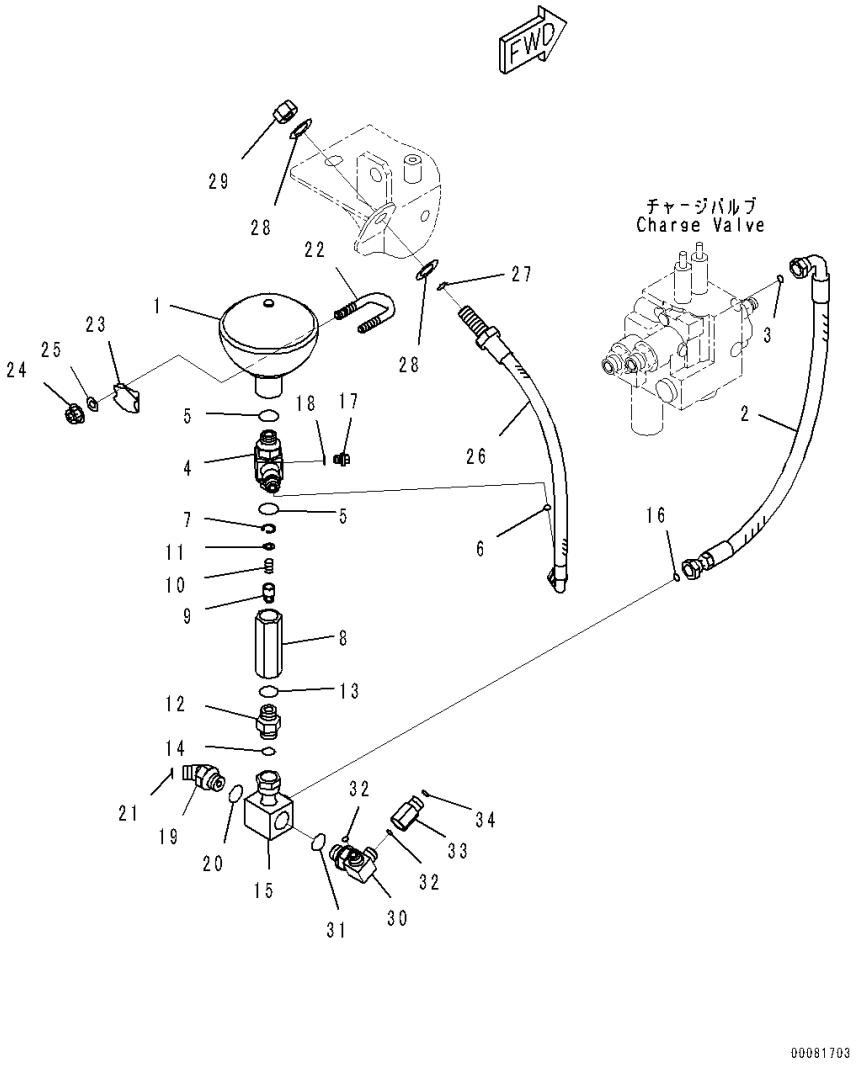

Index	Code	Part Number	Description	Qty	Serial Number
		Note: This list covers following specifications.			
		With Orbitrol Steering System			
		With Joystick Steering System			
		With Orbitrol Steering System, Brake Oil Cooling System			
1		425-62-23750	Accumulator	1	90216-
2		421-43-47750	Hose	1	90216-
3		02896-11012	O-ring	1	90216-
4		423-43-37520	Tee	1	90216-
5		07002-12034	O-ring	2	90216-
6		02896-11009	O-ring	1	90216-
		205-60-64300	Valve Assembly, Check	1	90216-
7		04065-01410	• Ring	1	90216-
8		205-60-64290	• Body	1	90216-
9		205-60-51390	• Poppet	1	90216-
10		205-60-51410	• Spring	1	90216-
11		205-60-51420	• Seat	1	90216-
12		02781-00422	Union	1	90216-
13		07002-12034	O-ring	1	90216-
14		02896-11012	O-ring	1	90216-
15		424-43-37470	Tee	1	90216-
16		02896-11012	O-ring	1	90216-
17		423-62-52290	Plug	1	90917-
18		07002-11023	O-ring	1	90216-
19		02783-10315	Elbow	1	90216-
20		07002-12034	O-ring	1	90216-
21		02896-11009	O-ring	1	90216-
22		07283-33450	Clip	1	90216-
23		07283-53444	Seat	1	90216-
24		01596-01009	Nut, Flanged	2	90216-
25		01643-31032	Washer	2	90216-
26		421-43-47820	Hose	1	90216-
27		02896-11009	• O-ring	1	90216-
28		01643-31845	Washer	2	90216-
29		426-62-35620	Nut	1	90216-
30		209-62-42840	Tee	1	90216-
31		07002-12034	O-ring	1	90216-
32		02896-11009	O-ring	2	90216-
33		14X-62-33411	Joint	1	90216-
34		02896-11009	O-ring	1	90216-

FIG. K4460-007005 Brake Control (Accumulator Charge Valve)

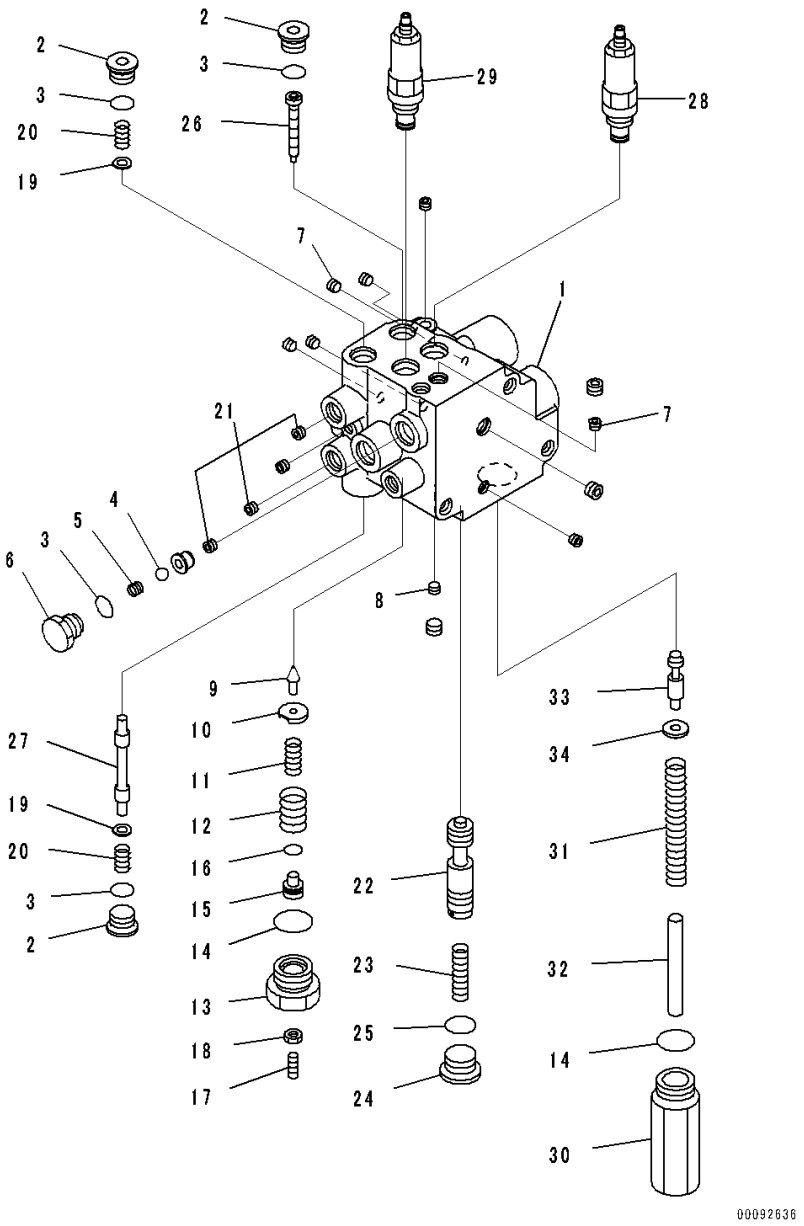

Index	Code	Part Number	Description	Qty	Serial Number
		Note: This list covers following specifications.			
		With Orbitrol Steering System			
		With Joystick Steering System			
		With Orbitrol Steering System, Brake Oil Cooling System			
1		421-43-47691	Valve Assembly	1	90917-
2		417-43-37541	• Plug	3	90917-
3		417-43-37550	• O-ring	4	90216-
4		417-43-37560	• Plug	1	90216-
5		417-43-37570	• Spring	1	90216-
6		417-43-37580	• Plug	1	90216-
7		417-43-37620	• Orifice	2	90216-
8		417-43-37640	• Orifice	1	90216-
9		417-43-37660	• Valve	1	90216-
10		417-43-37670	• Spring	1	90216-
11		417-43-37680	• Spring	1	90216-
12		417-43-37690	• Spring	1	90216-
13		417-43-37710	• Plug	1	90216-
14		417-43-37720	• O-ring	2	90216-
15		417-43-37730	• Seat	1	90216-
16		417-43-37740	• O-ring	1	90216-
17		417-43-37751	• Screw	1	90917-
18		417-43-37760	• Nut	1	90216-
19		417-43-37780	• Washer	2	90216-
20		417-43-37790	• Spring	2	90216-
21		419-43-37780	• Orifice	3	90216-
22		421-43-48550	• Spool	1	90216-
23		423-43-37560	• Spring	1	90216-
24		423-43-37571	• Plug	1	90917-
25		423-43-37580	• O-ring	1	90216-
26		423-43-37620	• Plunger	1	90216-
27		423-43-37630	• Spool	1	90216-
28		421-43-48640	• Valve, Relief	1	90216-
29		423-43-37650	• Valve, Relief	1	90216-
30		423-43-37660	• Plug	1	90216-
31		423-43-37670	• Spring	1	90216-
32		423-43-37690	• Retainer	1	90216-
33		423-43-37720	• Seat	1	90216-
34		423-43-47710	• Spool	1	90216-

FIG. K4460-007006 Brake Control (Accumulator Charge Valve Mounting)

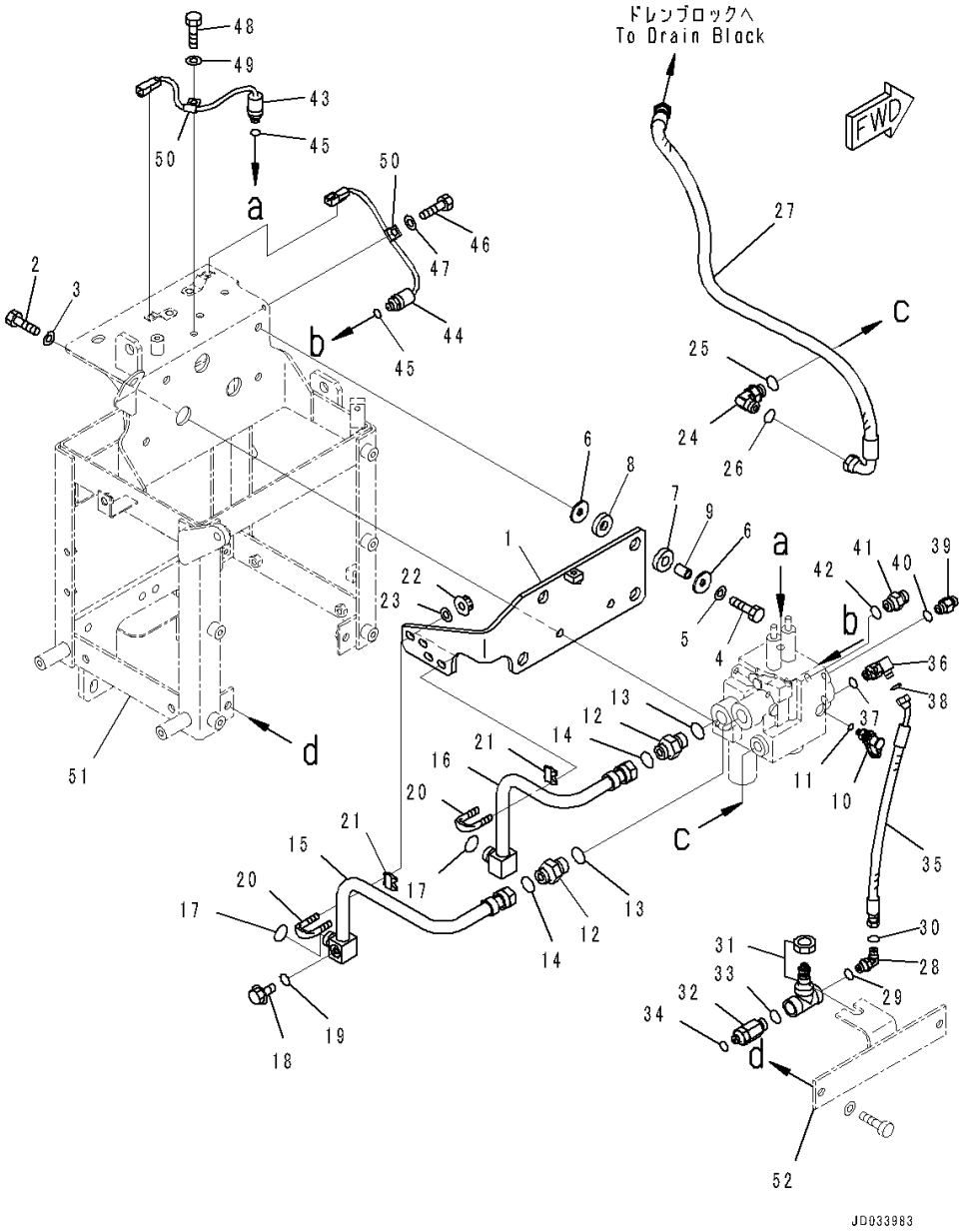

Index	Code	Part Number	Description	Qty	Serial Number
		Note: This list covers following specifications.			
		With Orbitrol Steering System			
		With Joystick Steering System			
		With Orbitrol Steering System, Brake Oil Cooling System			
1		421-43-47950	Plate	1	90216-
2		01010-81235	Bolt	3	90216-
3		01643-31232	Washer	3	90216-
4		01010-81255	Bolt	4	90216-
5		01643-31232	Washer	4	90216-
6		419-43-17920	Washer	8	90216-
7		419-43-17930	Cushion	4	90216-
8		415-64-13130	Cushion	4	90216-
9		417-54-12260	Spacer	4	90216-
10		799-101-5220	Nipple	1	90216-
11		07002-11023	O-ring	1	90216-
12		22S-62-81540	Nipple	2	90216-
13		22W-62-13420	O-ring	2	90216-
14		02896-11015	O-ring	2	90216-
15		421-43-47840	Tube	1	90216-
16		421-43-47850	Tube	1	90216-
17		02896-11015	O-ring	2	90216-
18		423-62-52290	Plug	1	90917-
19		07002-11023	O-ring	1	90216-
20		07283-32244	Clip	2	90216-
21		07283-52232	Seat	2	90216-
22		01597-01009	Nut	4	90216-
23		01643-31032	Washer	4	90216-
24		418-62-35111	Elbow	1	90216-
25		07000-12018	O-ring	1	90216-
26		02896-11012	O-ring	1	90216-
27		421-43-47790	Hose	1	90216-
28		02782-10210	Elbow	1	90216-
29		07002-11423	O-ring	1	90216-
30		02896-11008	O-ring	1	90216-
31		421-43-37362	Valve, Stop	1	90216-
32		421-43-37770	Valve, Check	1	90216-
		07002-12034	• O-ring	1	90216-
33		07002-12034	O-ring	1	90216-
34		02896-11008	O-ring	1	90216-
35		421-43-47780	Hose	1	90216-

FIG. K4460-007006 Brake Control (Accumulator Charge Valve Mounting)

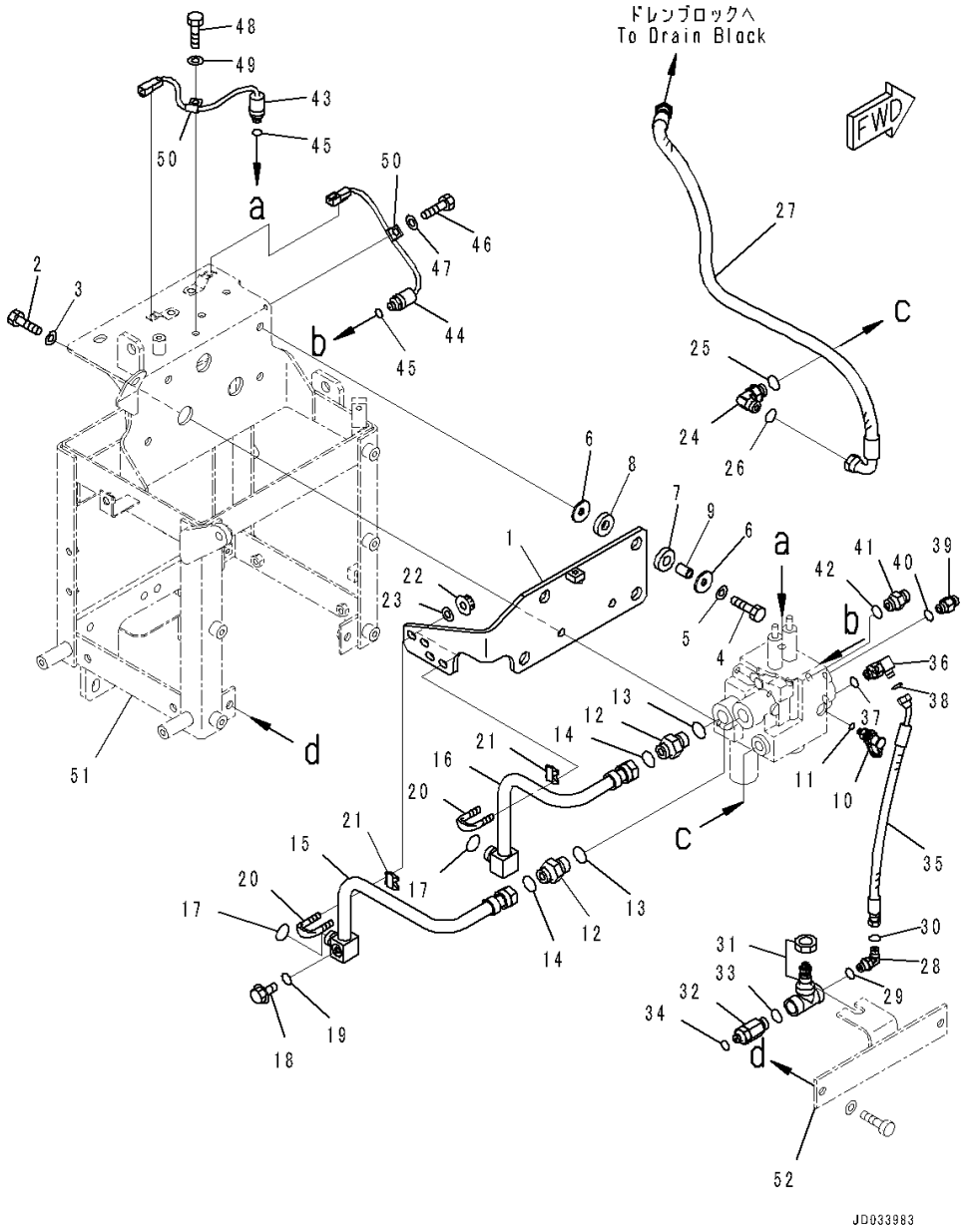

Index	Code	Part Number	Description	Qty	Serial Number
36		421-43-47980	Tee	1	90216-
37		07000-12014	O-ring	1	90216-
38		02896-11008	O-ring	1	90216-
39		421-43-47670	Union	1	90216-
40		07000-12014	O-ring	1	90216-
41		417-18-31120	Nipple	1	90216-
42		07000-12018	O-ring	1	90216-
43		421-43-32912	Switch, Pressure	1	90216-
44		421-43-32922	Switch, Pressure	1	90216-
45		07002-11423	O-ring	2	90216-
46		01010-81020	Bolt	1	90216-
47		01643-31032	Washer	1	90216-
48		01010-81025	Bolt	1	90216-
49		01643-31032	Washer	1	90216-
50		04434-50610	Clip	2	90216-
51		(421-43-47860)	Bracket(Refer to Page 694)		-
52		(421-43-47680)	Bracket(Refer to Page 694)		-

FIG. K4460-007007 Brake Control (Cover)

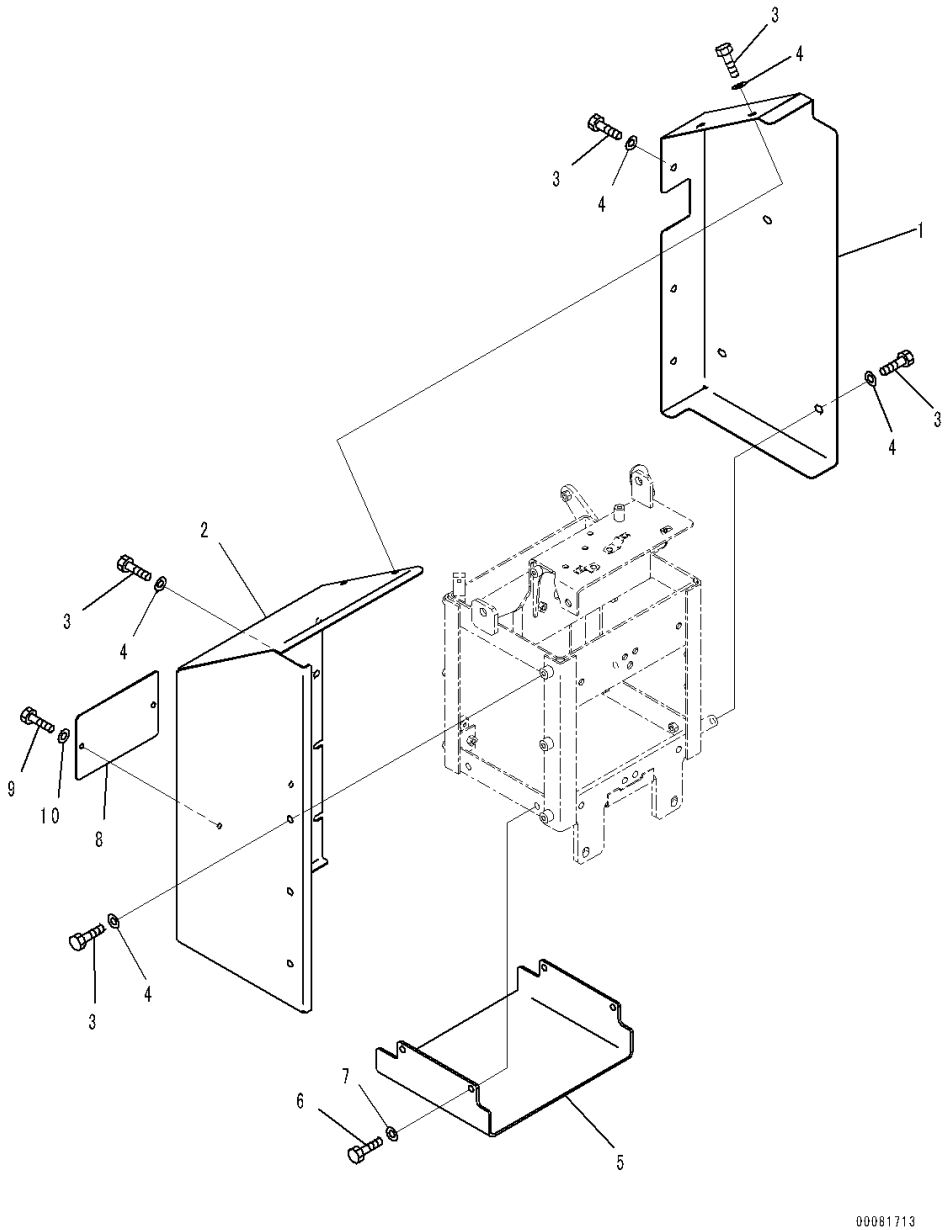

Index	Code	Part Number	Description	Qty	Serial Number
		Note: This list covers following specifications.			
		With Orbitrol Steering System			
		With Joystick Steering System			
		With Orbitrol Steering System, Brake Oil Cooling System			
1		421-43-47910	Cover	1	90216-
2		421-43-47920	Cover	1	90216-
3		01010-D1220	Bolt	15	90216-
4		01643-71232	Washer	15	90216-
5		421-43-47930	Bracket	1	90216-
6		01010-81230	Bolt	4	90216-
7		01643-31232	Washer	4	90216-
8		421-43-48410	Bracket	1	90216-
9		01010-D1020	Bolt	2	90216-
10		01643-71032	Washer	2	90216-

FIG. K4460-007008 Brake Control (Mounting)

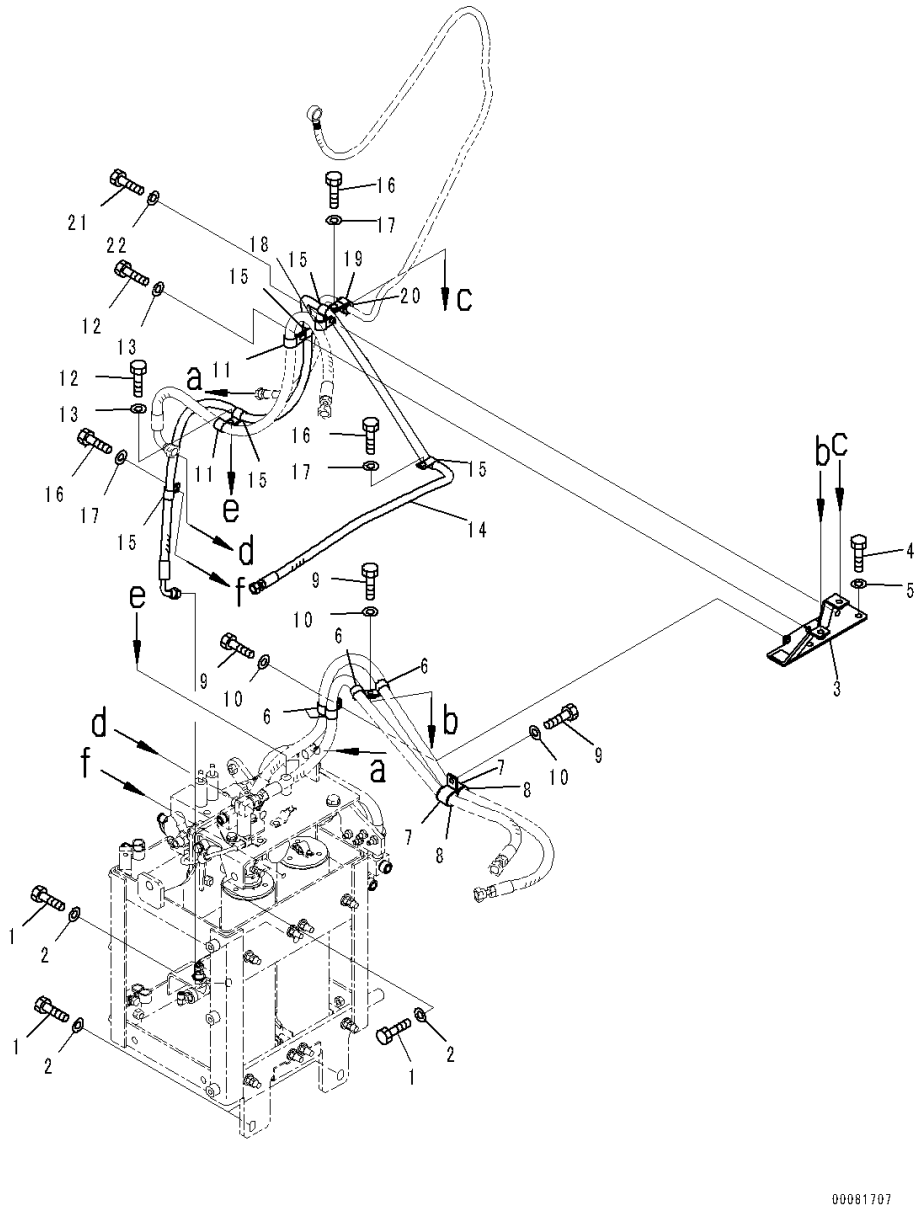

Index	Code	Part Number	Description	Qty	Serial Number
		Note: This list covers following specifications.			
		With Orbitrol Steering System			
		With Orbitrol Steering System, Brake Oil Cooling System			
1		01010-81435	Bolt	5	90216-
2		01643-31445	Washer, Flat	5	90216-
3		421-43-47890	Bracket	1	90216-
4		01010-81020	Bolt	2	90216-
5		01643-31032	Washer	2	90216-
6		04434-52110	Clip	4	90216-
7		04434-52711	Clip	2	90216-
8		07095-20420	Cushion	2	90216-
9		01010-81025	Bolt	3	90216-
10		01643-31032	Washer	3	90216-
11		04434-51810	Clip	2	90216-
12		01010-81025	Bolt	2	90216-
13		01643-31032	Washer	2	90216-
14		421-43-47760	Hose	1	90216-
15		04434-51510	Clip	5	90216-
16		01010-81025	Bolt	3	90216-
17		01643-31032	Washer	3	90216-
18		04434-51510	Clip	1	90216-
19		04434-52112	Clip	1	90216-
20		07095-20314	Cushion	1	90216-
21		01010-81025	Bolt	1	90216-
22		01643-31032	Washer	1	90216-

FIG. K4460-007009 Brake Control (Brake Valve Piping, Front)

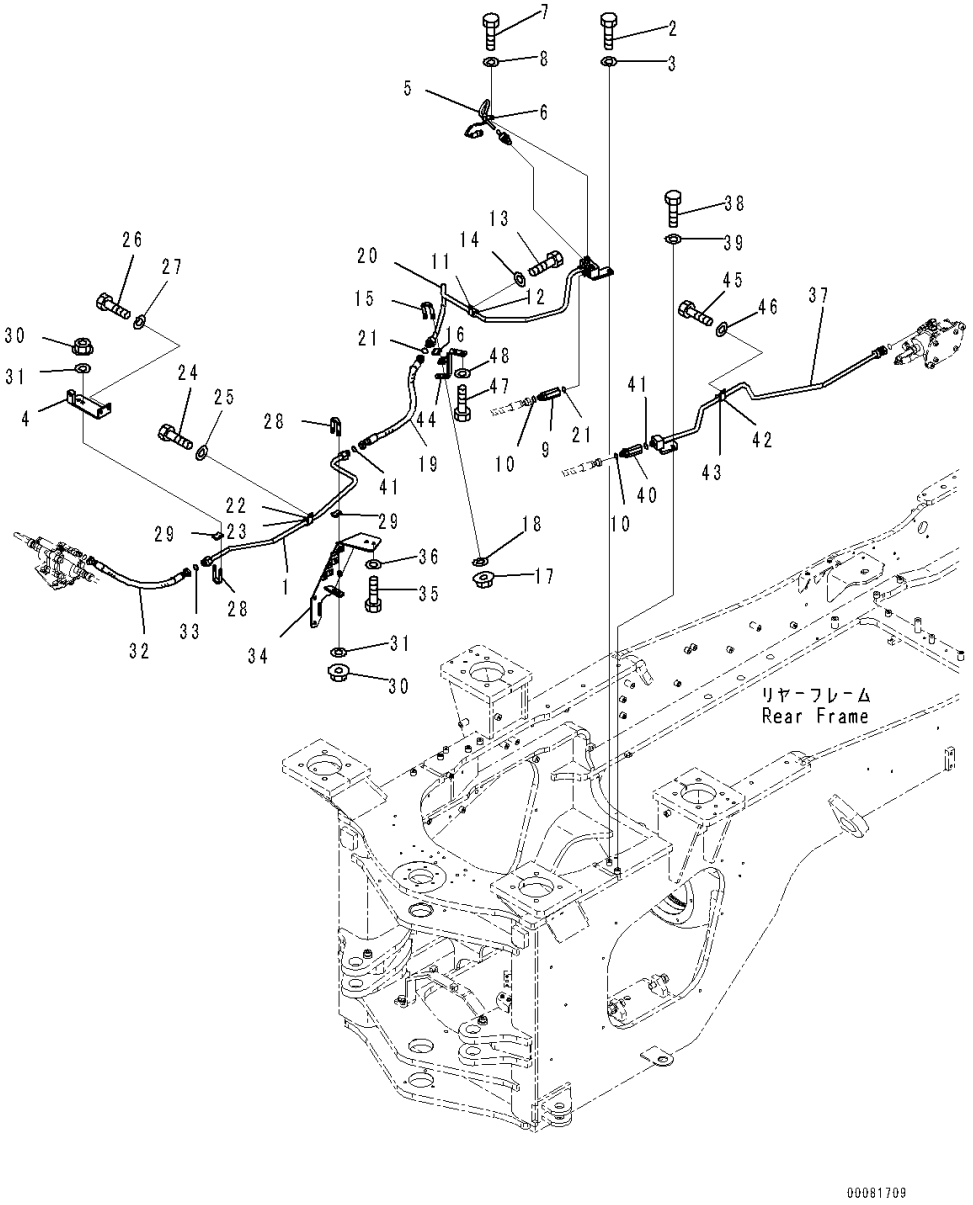

Index	Code	Part Number	Description	Qty	Serial Number
		Note: This list covers following specifications.			
		With Orbitrol Steering System			
		With Joystick Steering System			
1		421-43-47150	Tube	1	90216-
2		01010-81025	Bolt	1	90216-
3		01643-31032	Washer	1	90216-
4		421-43-47270	Bracket	1	90216-
5		421-06-35121	Sensor, Pressure	1	90216-
6		04434-51010	Clip	1	90216-
7		01010-81020	Bolt	1	90216-
8		01643-31032	Washer	1	90216-
9		423-43-47690	Valve, Check	1	90216-
10		02896-11012	O-ring	2	90216-
11		04434-52110	Clip	1	90216-
12		07095-20314	Cushion	1	90216-
13		01010-81020	Bolt	1	90216-
14		01643-31032	Washer	1	90216-
15		07283-31537	Clip	1	90216-
16		07283-51523	Seat	1	90216-
17		01596-00807	Nut	2	90216-
18		01643-30823	Washer	2	90216-
19		421-43-47430	Hose	1	90216-
20		421-43-47190	Tube	1	90216-
21		02896-11012	O-ring	2	90216-
22		04434-52110	Clip	1	90216-
23		07095-20314	Cushion	1	90216-
24		01010-81020	Bolt	1	90216-
25		01643-31032	Washer	1	90216-
26		01010-D1030	Bolt	2	90216-
27		01643-71032	Washer	2	90216-
28		07283-31537	Clip	2	90216-
29		07283-51523	Seat	2	90216-
30		01596-00807	Nut	4	90216-
31		01643-30823	Washer	4	90216-
32		421-43-41140	Hose	1	90216-
33		02896-11012	O-ring	1	90216-
34		421-62-42131	Bracket	1	90216-
35		01010-81025	Bolt	2	90216-
36		01643-31032	Washer	2	90216-
37		421-43-47160	Tube	1	90216-

FIG. K4460-007009 Brake Control (Brake Valve Piping, Front)

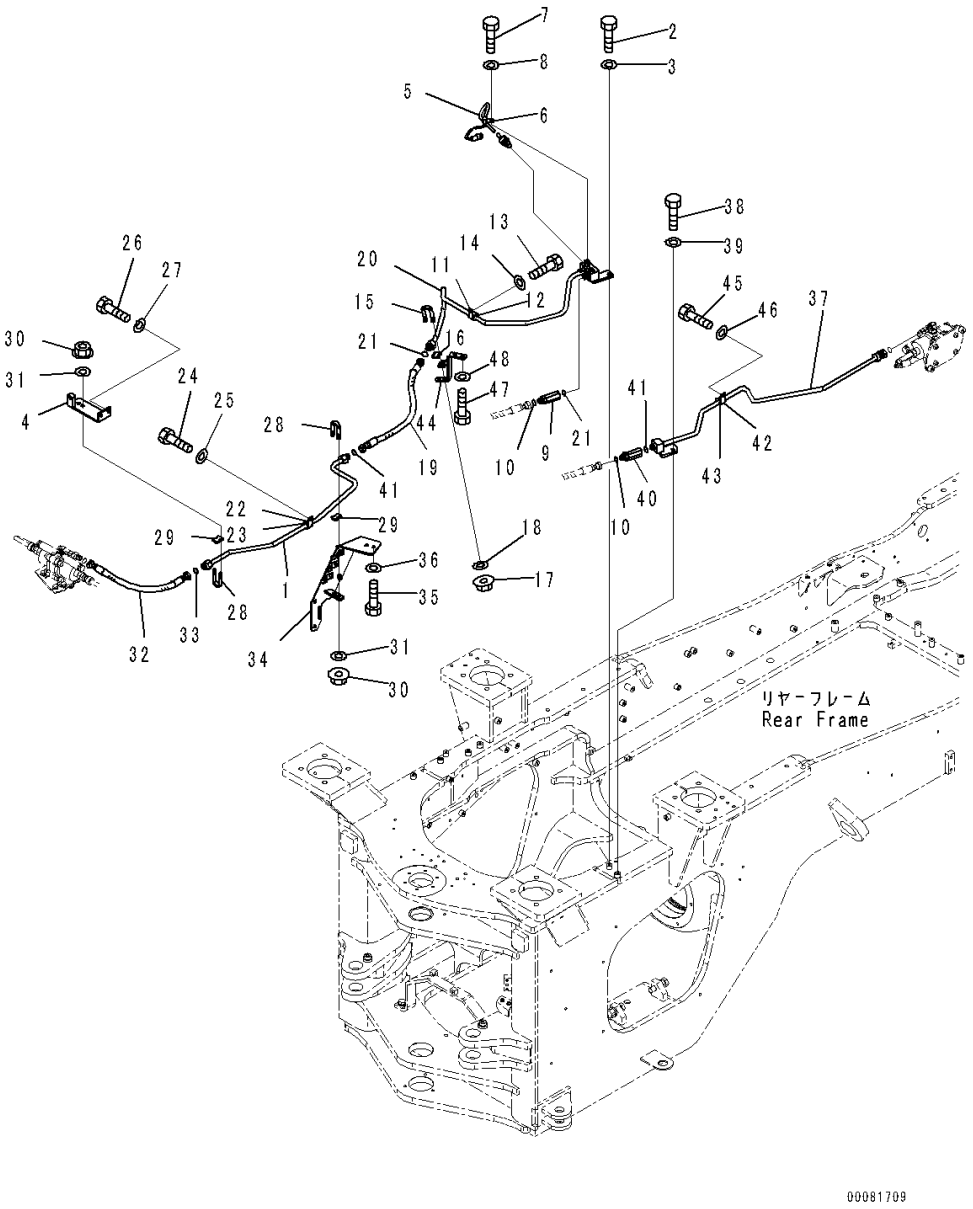

Index	Code	Part Number	Description	Qty	Serial Number
38		01010-81025	Bolt	1	90216-
39		01643-31032	Washer	1	90216-
40		423-43-47690	Valve, Check	1	90216-
41		02896-11012	O-ring	2	90216-
42		04434-52110	Clip	1	90216-
43		07095-20314	Cushion	1	90216-
44		421-43-47420	Bracket	1	90216-
45		01010-81020	Bolt	1	90216-
46		01643-31032	Washer	1	90216-
47		01010-81025	Bolt	2	90216-
48		01643-31032	Washer	2	90216-

FIG. K4460-007010 Brake Control (Brake Valve Piping, Drain) (1/2)

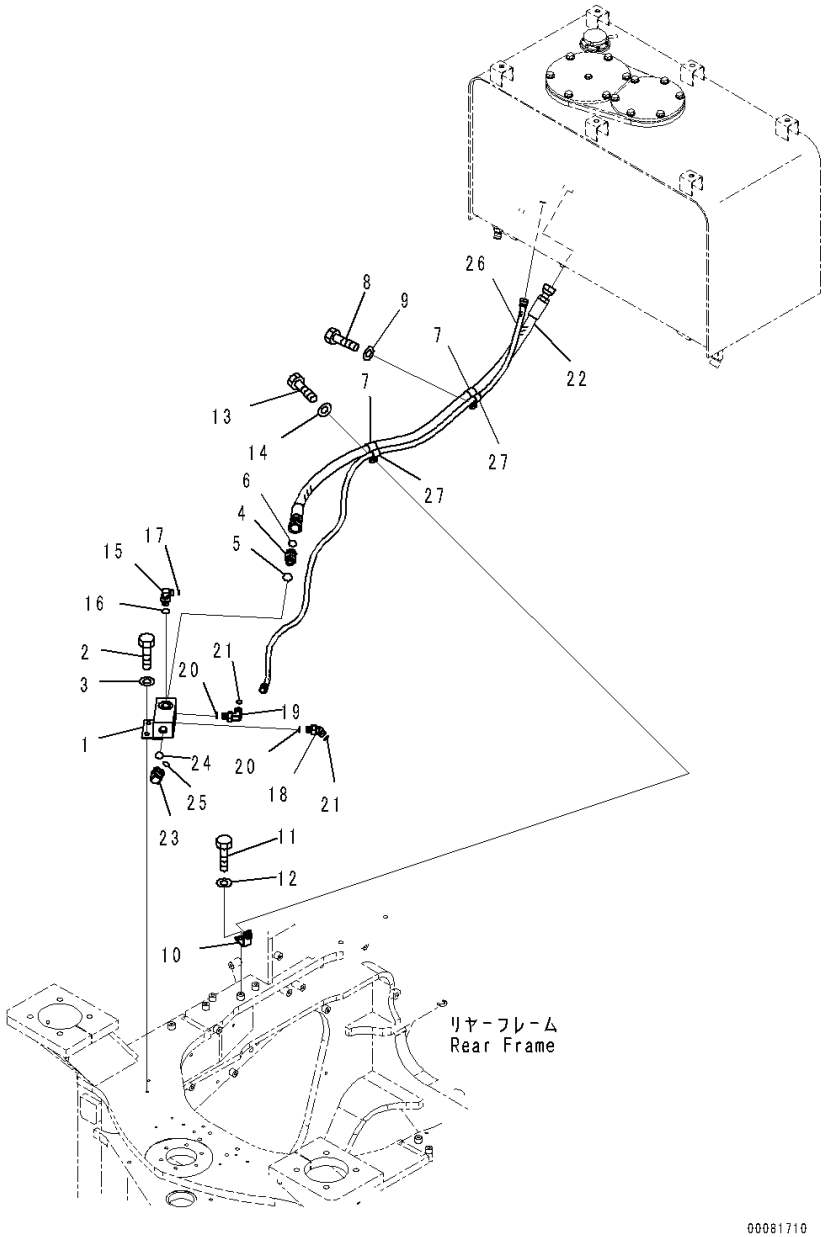

Index	Code	Part Number	Description	Qty	Serial Number
		Note: This list covers following specifications.			
		With Orbitrol Steering System			
		With Joystick Steering System			
		With Orbitrol Steering System, Brake Oil Cooling System			
1		423-43-47430	Block	1	90216-
2		01010-81025	Bolt	2	90216-
3		01643-31032	Washer	2	90216-
4		02781-00628	Union	1	90216-
5		07002-12434	O-ring	1	90216-
6		02896-11018	O-ring	1	90216-
7		04434-52511	Clip	2	90216-
8		01010-81020	Bolt	1	90216-
9		01643-31032	Washer	1	90216-
10		415-06-25120	Plate	1	90216-
11		01010-81020	Bolt	1	90216-
12		01643-31032	Washer	1	90216-
13		01010-81025	Bolt	1	90216-
14		01643-31032	Washer	1	90216-
15		02782-10315	Elbow	1	90216-
16		07002-12034	O-ring	1	90216-
17		02896-11009	O-ring	1	90216-
18		02783-10422	Elbow	1	90216-
19		02782-10422	Elbow	1	90216-
20		07002-12034	O-ring	2	90216-
21		02896-11012	O-ring	2	90216-
22		421-62-43960	Hose	1	90216-
23		02782-10516	Elbow	1	90216-
24		07002-12034	O-ring	1	90216-
25		02896-11015	O-ring	1	90216-
26		421-62-43951	Hose	1	90216-
27		04434-51510	Clip	2	90216-

FIG. K4460-007011 Brake Control (Brake Valve Piping, Drain) (2/2)

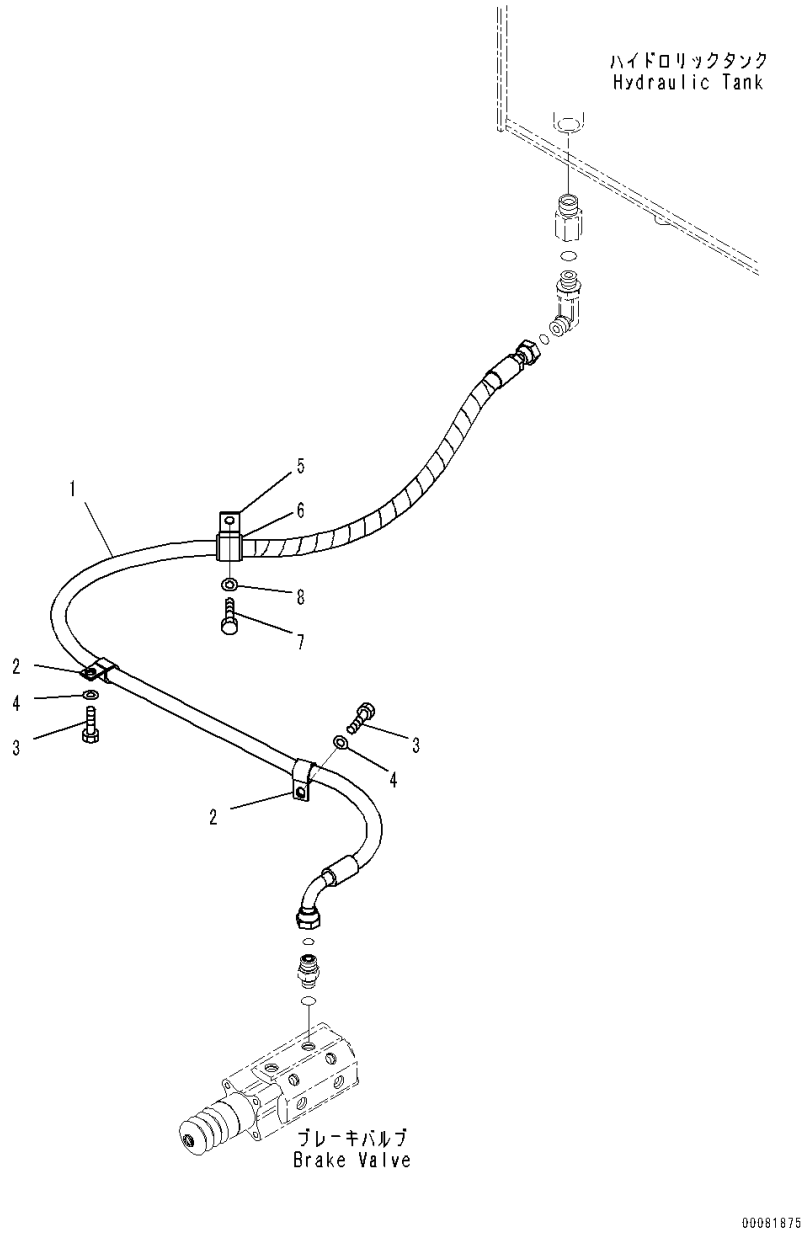

Index	Code	Part Number	Description	Qty	Serial Number
		Note: This list covers following specifications.			
		With Orbitrol Steering System			
		With Joystick Steering System			
		With Orbitrol Steering System, Brake Oil Cooling System			
1		421-43-47330	Hose	1	90216-
2		04434-51810	Clip	2	90216-
3		01010-81020	Bolt	2	90216-
4		01643-31032	Washer	2	90216-
5		04434-52711	Clip	1	90216-
6		07095-20418	Cushion	1	90216-
7		01010-81020	Bolt	1	90216-
8		01643-31032	Washer	1	90216-

FIG. K4460-008008 Brake Control (With Joystick Steering System) (Mounting)

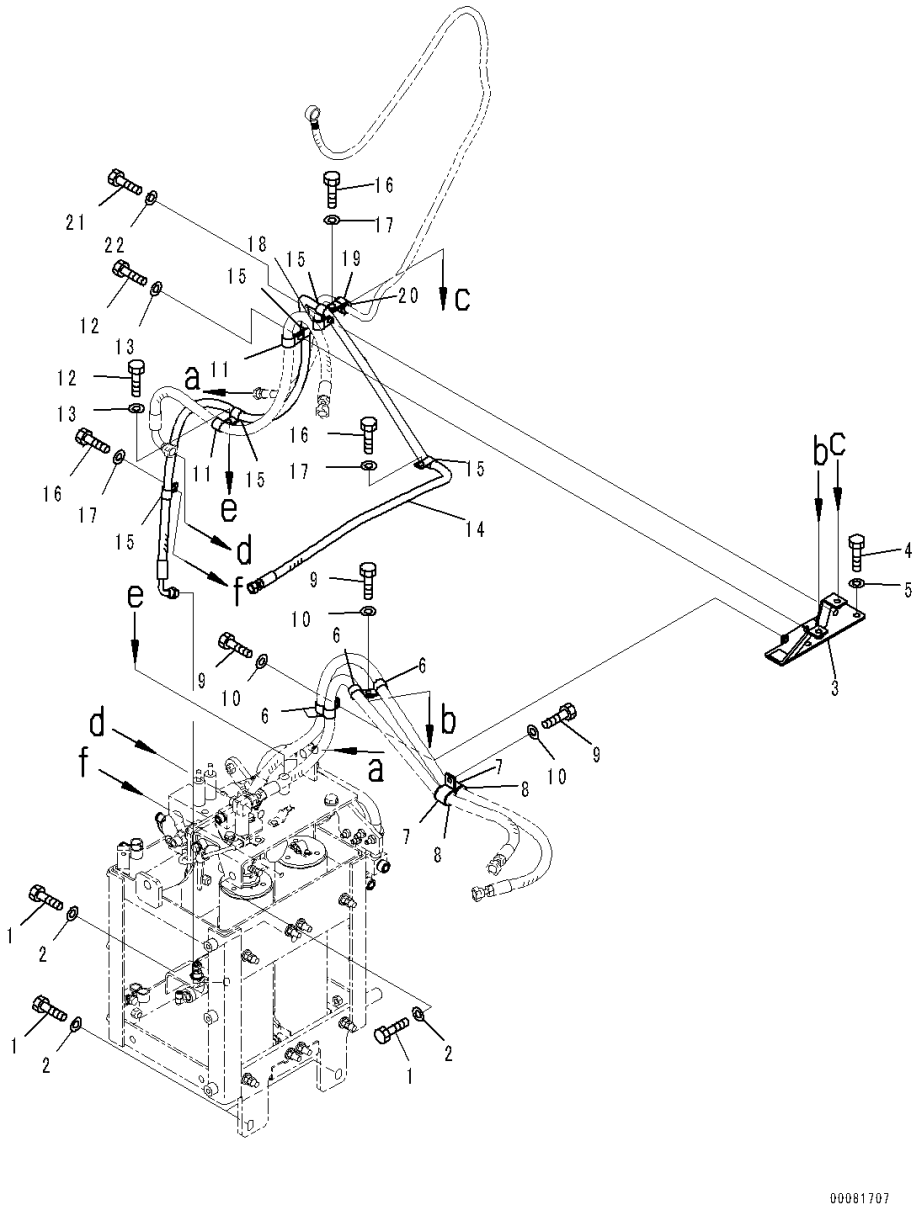

Index	Code	Part Number	Description	Qty	Serial Number
1		01010-81435	Bolt	4	90216-
2		01643-31445	Washer, Flat	4	90216-
3		421-43-47890	Bracket	1	90216-
4		01010-81020	Bolt	2	90216-
5		01643-31032	Washer	2	90216-
6		04434-51910	Clip	4	90216-
7		04434-52711	Clip	2	90216-
8		07095-20419	Cushion	2	90216-
9		01010-81025	Bolt	3	90216-
10		01643-31032	Washer	3	90216-
11		04434-51810	Clip	2	90216-
12		01010-81025	Bolt	2	90216-
13		01643-31032	Washer	2	90216-
14		421-S33-4350	Hose	1	90216-
15		04434-51510	Clip	5	90216-
16		01010-81025	Bolt	3	90216-
17		01643-31032	Washer	3	90216-
18		04434-51510	Clip	1	90216-
19		04434-52112	Clip	1	90216-
20		07095-20314	Cushion	1	90216-
21		01010-81025	Bolt	1	90216-
22		01643-31032	Washer	1	90216-

FIG. K4460-009002A Brake Control (With Orbitrol Steering System, Brake Oil Cooling System) (Accumulator)

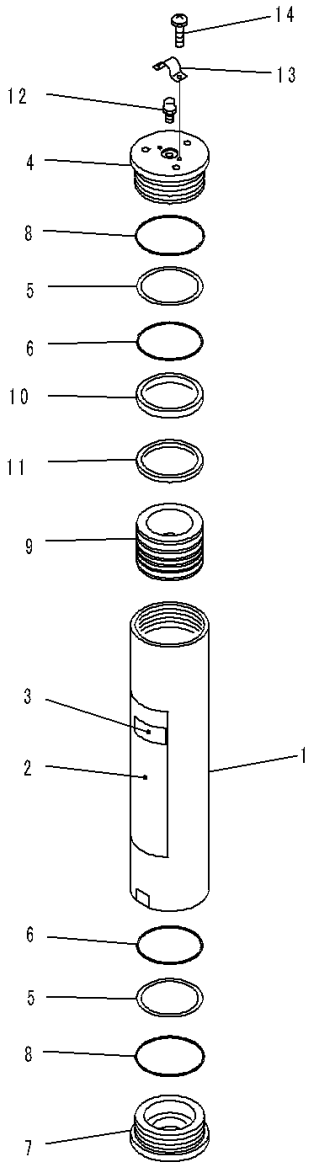

JY017643

Index	Code	Part Number	Description	Qty	Serial Number
		721-32-08190	Accumulator Assembly, Final Coating	2	90216-
		721-32-10281	• Accumulator Assembly	1	90216-
1		721-10-10320	• Cylinder	1	90216-
2		721-89-10054	• Plate, Warning, Accumulator	1	90764-
3		721-89-10100	• Cover	1	90764-
4		721-29-10090	• Cover, Top	1	90216-
5		707-35-91020	• Ring, Back-up	2	90216-
6		07000-15090	• O-ring	2	90216-
7		721-26-10050	• Cover, End	1	90216-
8		07000-12100	• O-ring	2	90216-
9		721-36-10030	• Piston	1	90216-
10		721-47-12080	• Seal, Piston	1	90216-
11		721-47-12021	• Seal, Step	1	90216-
12		721-89-12011	• Valve, Gas	1	90216-
13		707-88-45770	• Cover	1	90216-
14		707-88-81480	• Screw	2	90216-

FIG. K4460-009009 Brake Control (With Orbitrol Steering System, Brake Oil Cooling System) (Brake Valve Piping, Front)

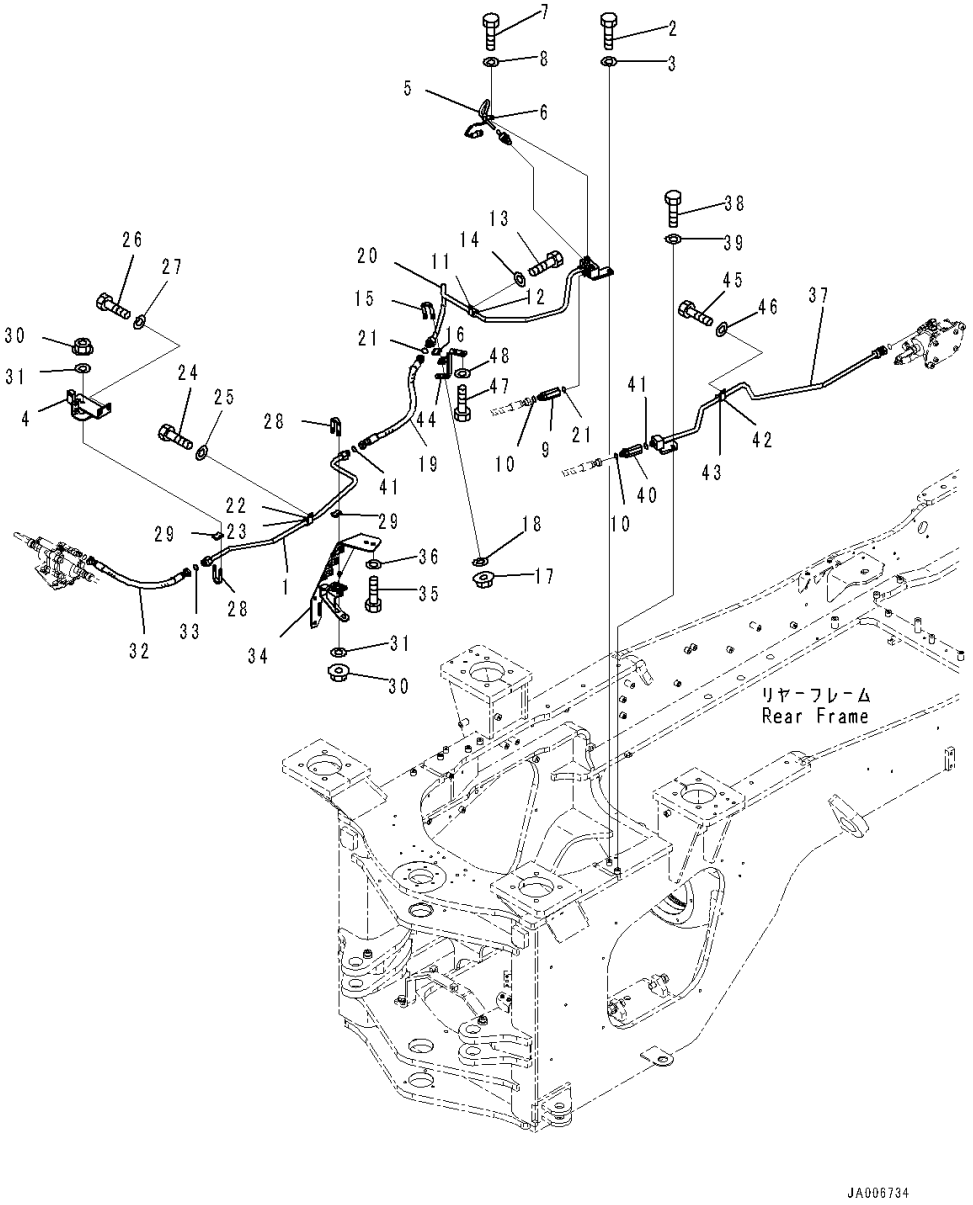

Index	Code	Part Number	Description	Qty	Serial Number
1		421-43-47150	Tube	1	90216-
2		01010-81025	Bolt	1	90216-
3		01643-31032	Washer	1	90216-
4		421-U44-4520	Bracket	1	90216-
5		421-06-35121	Sensor, Pressure	1	90216-
6		04434-51010	Clip	1	90216-
7		01010-81020	Bolt	1	90216-
8		01643-31032	Washer	1	90216-
9		423-43-47690	Valve, Check	1	90216-
10		02896-11012	O-ring	2	90216-
11		04434-52110	Clip	1	90216-
12		07095-20314	Cushion	1	90216-
13		01010-81020	Bolt	1	90216-
14		01643-31032	Washer	1	90216-
15		07283-31537	Clip	1	90216-
16		07283-51523	Seat	1	90216-
17		01596-00807	Nut	2	90216-
18		01643-30823	Washer	2	90216-
19		421-43-47430	Hose	1	90216-
20		421-43-47190	Tube	1	90216-
21		02896-11012	O-ring	2	90216-
22		04434-52110	Clip	1	90216-
23		07095-20314	Cushion	1	90216-
24		01010-81020	Bolt	1	90216-
25		01643-31032	Washer	1	90216-
26		01010-D1030	Bolt	2	90216-
27		01643-71032	Washer	2	90216-
28		07283-31537	Clip	2	90216-
29		07283-51523	Seat	2	90216-
30		01596-00807	Nut	4	90216-
31		01643-30823	Washer	4	90216-
32		421-43-41140	Hose	1	90216-
33		02896-11012	O-ring	1	90216-
34		421-U44-4530	Bracket	1	90216-
35		01010-81025	Bolt	2	90216-
36		01643-31032	Washer	2	90216-
37		421-U45-4150	Tube	1	90216-
38		01010-81025	Bolt	1	90216-
39		01643-31032	Washer	1	90216-

FIG. K4460-009009 Brake Control (With Orbitrol Steering System, Brake Oil Cooling System) (Brake Valve Piping, Front)

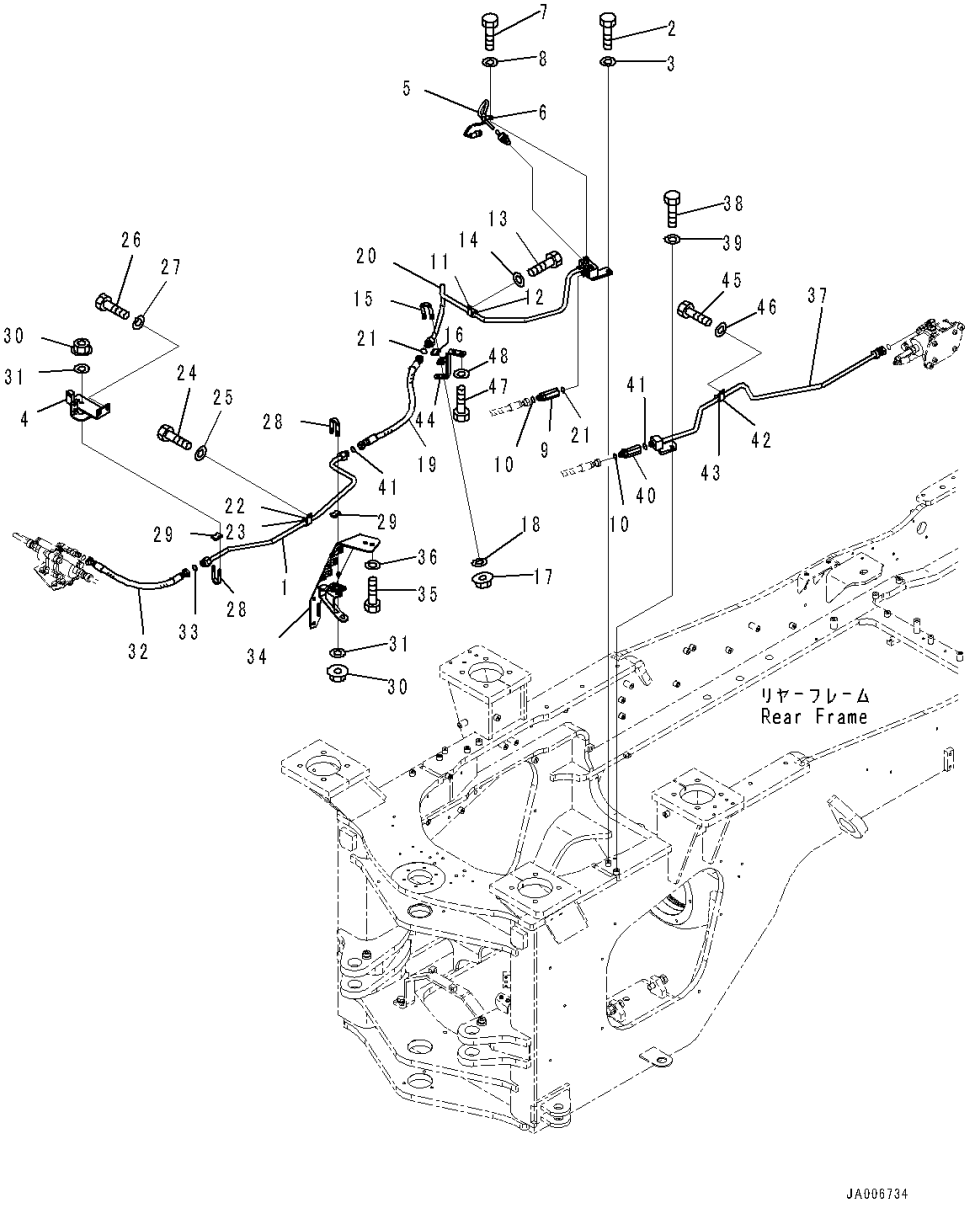

Index	Code	Part Number	Description	Qty	Serial Number
40		423-43-47690	Valve, Check	1	90216-
41		02896-11012	O-ring	2	90216-
42		04434-52110	Clip	1	90216-
43		07095-20314	Cushion	1	90216-
44		421-U44-4570	Bracket	1	90216-
45		01010-81020	Bolt	1	90216-
46		01643-31032	Washer	1	90216-
47		01010-81025	Bolt	2	90216-
48		01643-31032	Washer	2	90216-

FIG. K4460-009012 Brake Control (With Orbitrol Steering System, Brake Oil Cooling System) (Inner Parts, Gear Pump) (1/2)

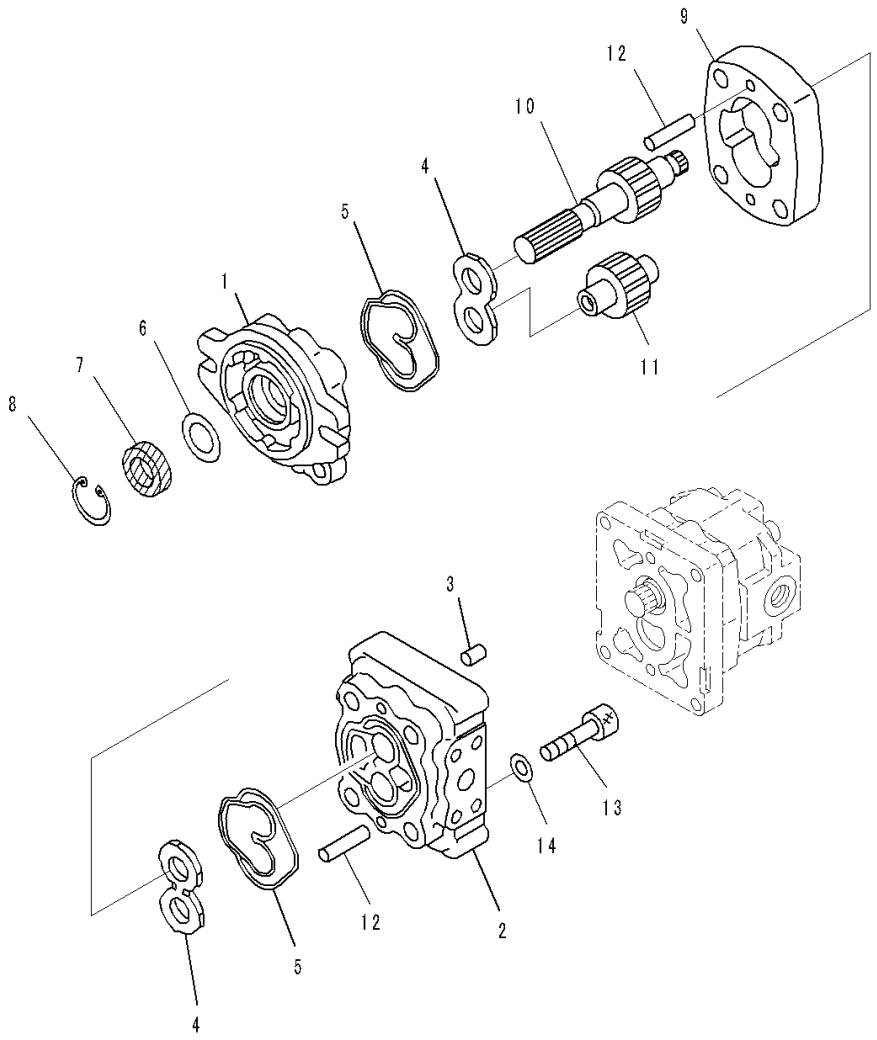

Index	Code	Part Number	Description	Qty	Serial Number
		705-41-07210	Pump Assembly, Gear	1	90216-
		705-41-03620	• Pump Assembly, Gear	1	90216-
1	C2	705-41-80210	• • Bracket Assembly	1	90216-
	C2	705-40-80610	• • • Bearing, Plane, Driven Gear Side	1	90216-
	C2	705-40-80620	• • • Bearing, Plane, Drive Gear Side	1	90216-
2	C2	705-41-80330	• • Carrier Assembly	1	90216-
	C2	705-40-80610	• • • Bearing, Plane, Drive Gear Side	1	90216-
	C2	705-40-80620	• • • Bearing, Plane, Driven Gear Side	1	90216-
3		705-67-01230	• • Pin, Dowel	2	90216-
4		705-40-83720	• • Plate, Side	2	90216-
5		705-40-80770	• • Seal	2	90216-
6		705-40-80870	• • Plate	1	90216-
7		705-40-80820	• • Seal, Oil	1	90216-
8		04065-03515	• • Ring, Snap	1	90216-
9	C2	705-40-24011	• • Case, Gear	1	90216-
10	C2	705-40-24330	• • Gear, Drive	1	90216-
11	C2	705-40-24511	• • Gear, Driven	1	90216-
12		04020-00820	• • Pin, Dowel	4	90216-
13		01252-61275	• • Bolt, Hexagon Socket Head	4	90216-
14		01643-51232	• • Washer	4	90216-

FIG. K4460-009013 Brake Control (With Orbitrol Steering System, Brake Oil Cooling System) (Inner Parts, Gear Pump) (2/2)

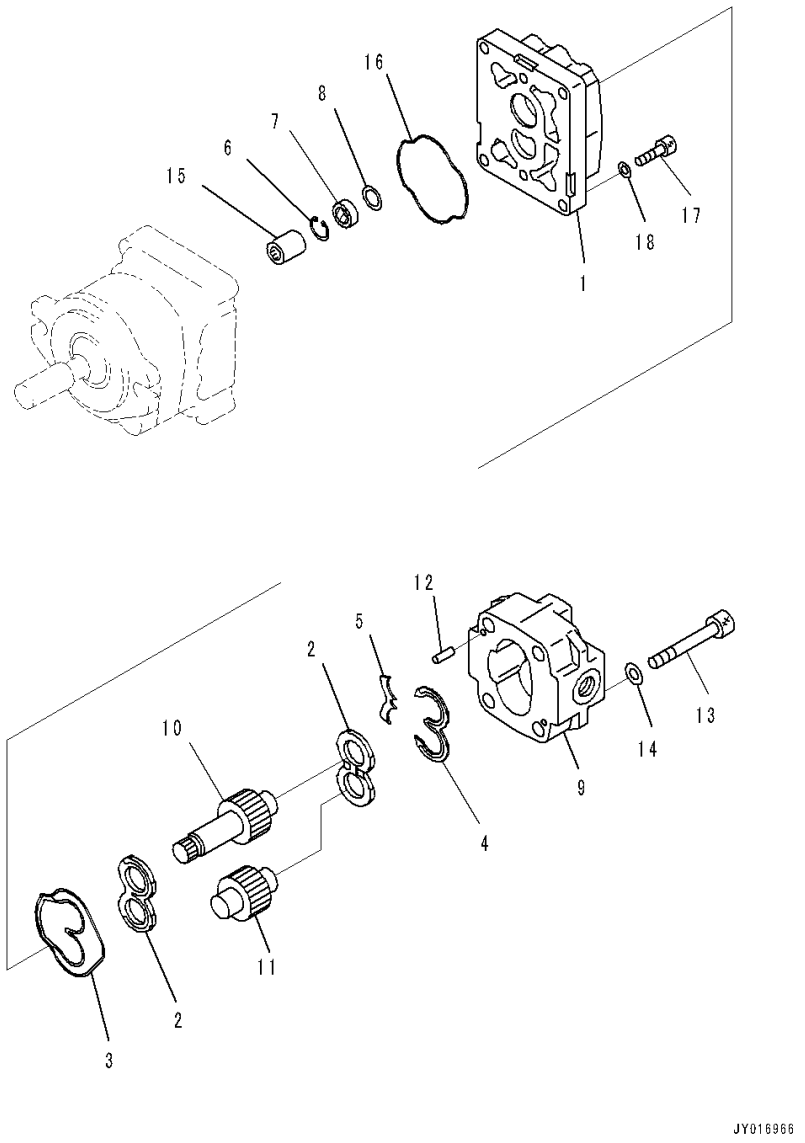

Index	Code	Part Number	Description	Qty	Serial Number
		705-41-07210	Pump Assembly, Gear	1	90216-
		705-41-05680	• Pump Assembly, Gear	1	90216-
1	C2	705-41-83510	• • Bracket Assembly	1	90216-
	C2	705-40-83630	• • • Bearing, Plane, Driven Gear Side	1	90216-
	C2	705-40-83640	• • • Bearing, Plane, Drive Gear Side	1	90216-
2		705-40-83720	• • Plate, Side	2	90216-
3		705-40-80770	• • Seal	1	90216-
4		705-40-83760	• • Seal	1	90216-
5		705-40-80881	• • Plate	1	90216-
6		04065-03012	• • Ring, Snap	1	90216-
7		705-40-81820	• • Seal, Oil	1	90216-
8		705-40-81870	• • Plate	1	90216-
9	C2	705-40-24F30	• • Housing Assembly	1	90216-
	C2	705-40-83630	• • • Bearing, Plane, Drive Gear Side	1	90216-
	C2	705-40-83640	• • • Bearing, Plane, Driven Gear Side	1	90216-
10	C2	705-40-24L50	• • Gear, Drive	1	90216-
11		705-40-24H10	• • Gear, Driven	1	90216-
12		04020-00514	• • Pin, Dowel	2	90216-
13		01252-71055	• • Bolt, Hexagon Socket Head	4	90216-
14		01643-51032	• • Washer	4	90216-
15		705-67-01330	• Coupling Assembly	1	90216-
16		705-40-80670	• O-ring	1	90216-
17		01252-60830	• Bolt, Hexagon Socket Head	4	90216-
18		01643-50823	• Washer	4	90216-

FIG. K4460-009014 Brake Control (With Orbitrol Steering System, Brake Oil Cooling System) (Motor Related Parts)

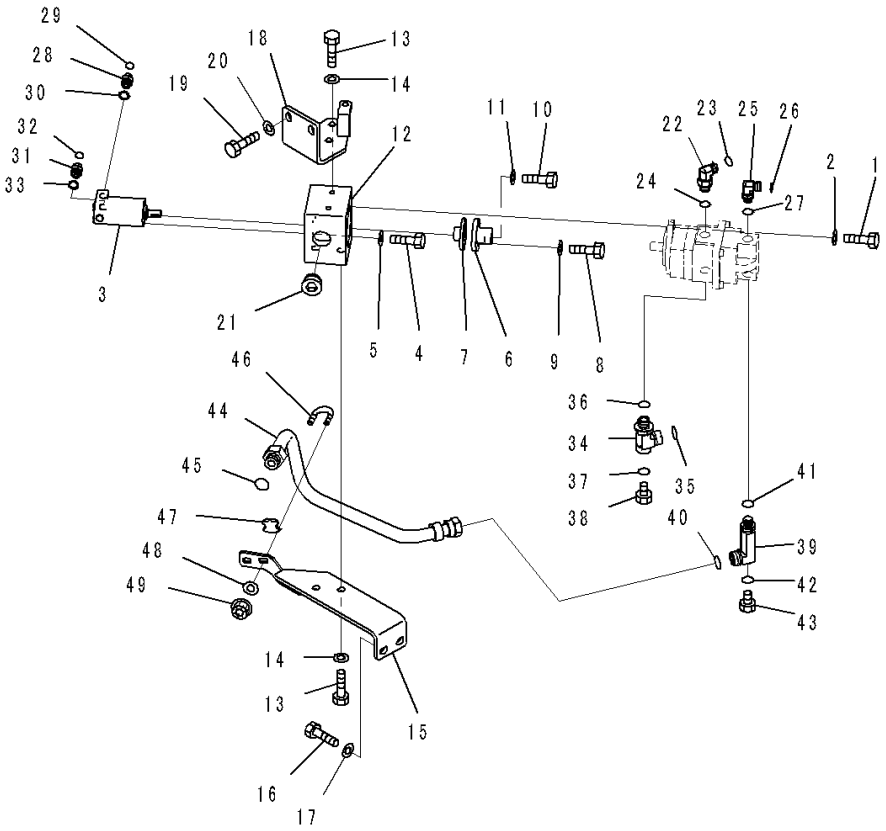

Index	Code	Part Number	Description	Qty	Serial Number
1		01010-81030	Bolt	2	90216-
2		01643-31032	Washer	2	90216-
3		56B-88-12170	Motor	1	90216-
4		01010-80616	Bolt	3	90216-
5		01643-30623	Washer	3	90216-
6		421-U44-3591	Coupling	1	90216-
7		56B-88-12120	Coupling	1	90216-
8		01010-80620	Bolt	4	90216-
9		01643-30623	Washer	4	90216-
10		01010-80612	Bolt	1	90216-
11		419-43-17760	Washer	1	90216-
12		421-U44-3611	Block	1	90216-
13		01010-81230	Bolt	4	90216-
14		01643-31232	Washer	4	90216-
15		421-U44-4580	Bracket	1	90216-
16		01010-81225	Bolt	2	90216-
17		01643-31232	Washer	2	90216-
18		421-U44-4630	Bracket	1	90216-
19		01010-81235	Bolt	2	90216-
20		01643-31232	Washer	2	90216-
21		07043-71222	Plug, Taper	1	90216-
22		418-62-35111	Elbow	1	90216-
23		02896-21012	O-ring	1	90216-
24		07000-A2018	O-ring	1	90216-
25		421-U44-3730	Elbow	1	90216-
26		02896-21012	O-ring	1	90216-
27		07000-A2014	O-ring	1	90216-
28		56B-88-12230	Union	1	90216-
29		02896-21009	O-ring	1	90216-
30		56B-88-12480	Seal	1	90216-
31		56B-88-12230	Union	1	90216-
32		02896-21009	O-ring	1	90216-
33		56B-88-12480	Seal	1	90216-
34		14S-62-21841	Elbow	1	90216-
35		02896-21018	O-ring	1	90216-
36		07000-A3024	O-ring	1	90216-
37		07002-21023	O-ring	1	90216-
38		07040-11007	Plug	1	90216-
39		421-U45-4180	Elbow	1	90216-
40		02896-21018	O-ring	1	90216-

FIG. K4460-009014 Brake Control (With Orbitrol Steering System, Brake Oil Cooling System) (Motor Related Parts)

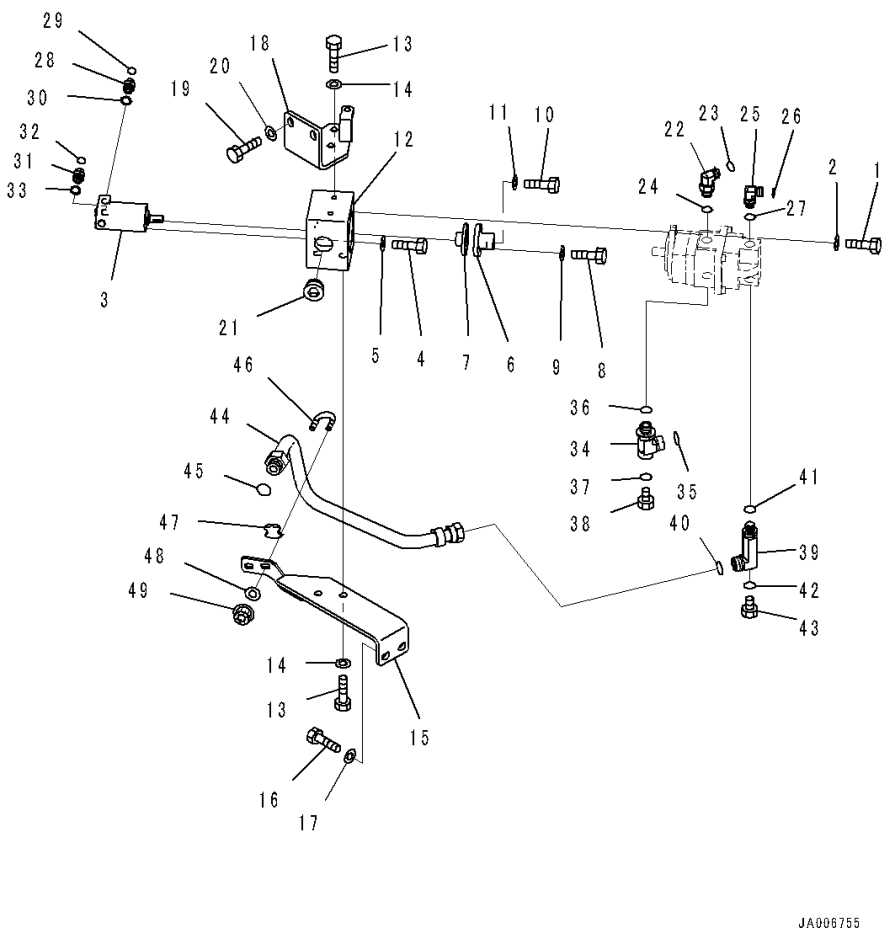

Index	Code	Part Number	Description	Qty	Serial Number
41		07000-A2018	O-ring	1	90216-
42		07002-21023	O-ring	1	90216-
43		07040-11007	Plug	1	90216-
44		421-U44-4970	Tube	1	90216-
45		02896-21018	O-ring	1	90216-
46		07283-32738	Clip, Pipe	1	90216-
47		07283-52737	Seat	1	90216-
48		01643-31032	Washer	2	90216-
49		01597-01009	Nut	2	90216-

FIG. K4460-009015 Brake Control (With Orbitrol Steering System, Brake Oil Cooling System) (Priority Valve)

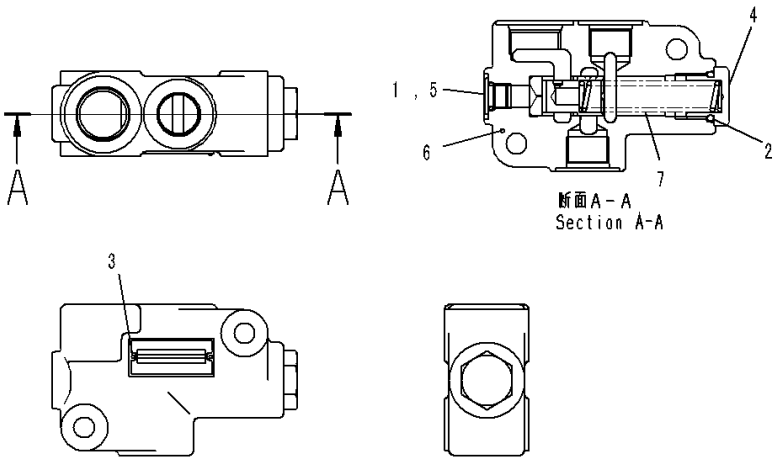

Index	Code	Part Number	Description	Qty	Serial Number
		421-U45-4280	Valve Assembly, Priority	1	90490-
1		07000-12011	• O-ring	1	90490-
2		07000-12018	• O-ring	1	90490-
3		22J-62-1A690	• Screw	2	90490-
4		22T-60-13110	• Stopper	1	90490-
5		23S-60-48570	• Plug	1	90490-
6	C1		• Body Assembly	1	90490-
7		421-U45-4390	• Spring	1	90490-

FIG. K4460-009016 Brake Control (With Orbitrol Steering System, Brake Oil Cooling System) (Hose and Bracket)

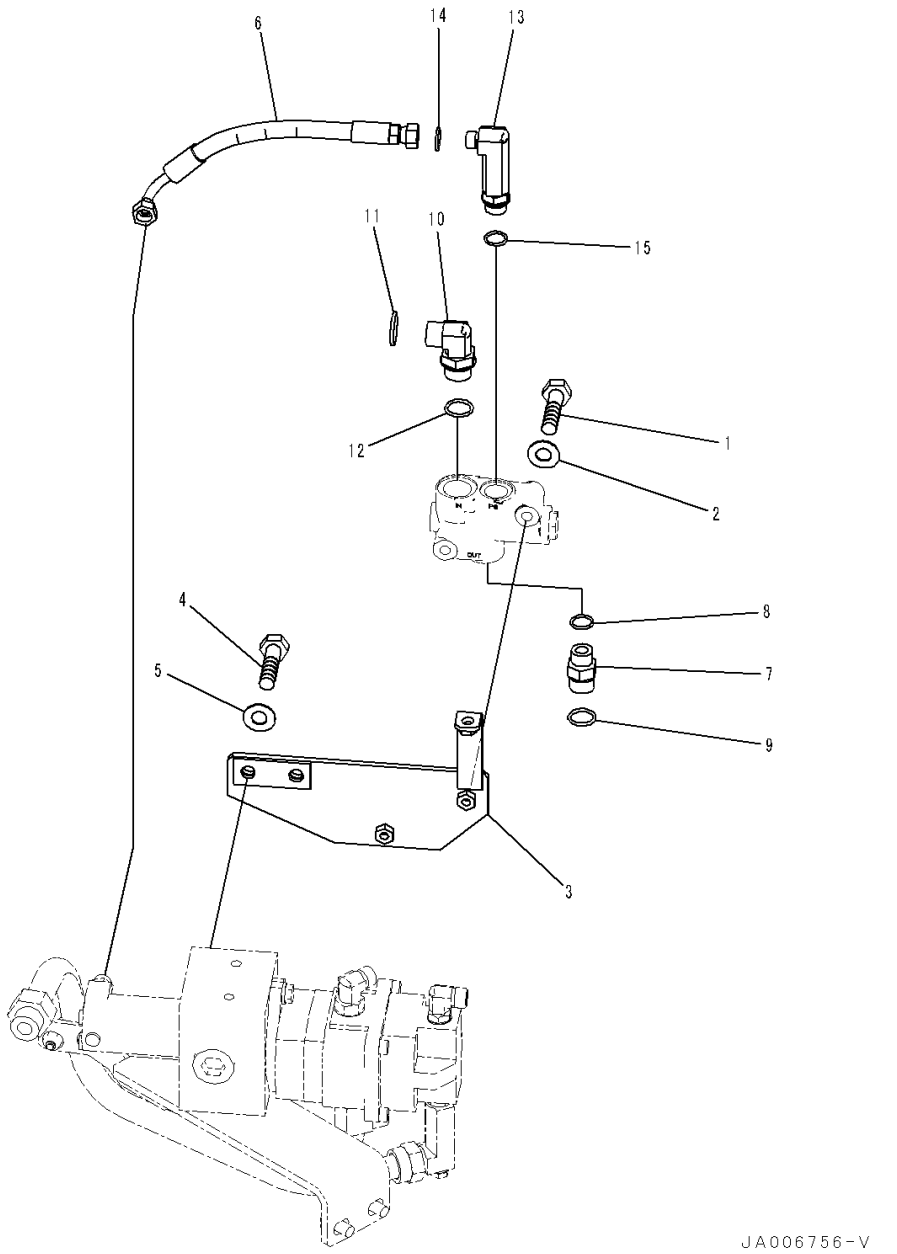

Index	Code	Part Number	Description	Qty	Serial Number
1		01010-81065	Bolt	2	90216-
2		01643-31032	Washer	2	90216-
3		421-U44-4650	Bracket	1	90216-
4		01010-81025	Bolt	2	90216-
5		01643-31032	Washer	2	90216-
6		02754-00303	Hose, Face Seal Type	1	90216-
7		22S-71-81580	Nipple	1	90216-
8		418-62-11620	O-ring	1	90216-
9		02896-21015	O-ring	1	90216-
10		23B-64-41240	Elbow	1	90216-
11		02896-21015	O-ring	1	90216-
12		416-62-13450	O-ring	1	90216-
13		421-U45-4190	Elbow	1	90216-
14		02896-21009	O-ring	1	90216-
15		418-62-11620	O-ring	1	90216-

FIG. K4460-009017 Brake Control (With Orbitrol Steering System, Brake Oil Cooling System) (Strainer)

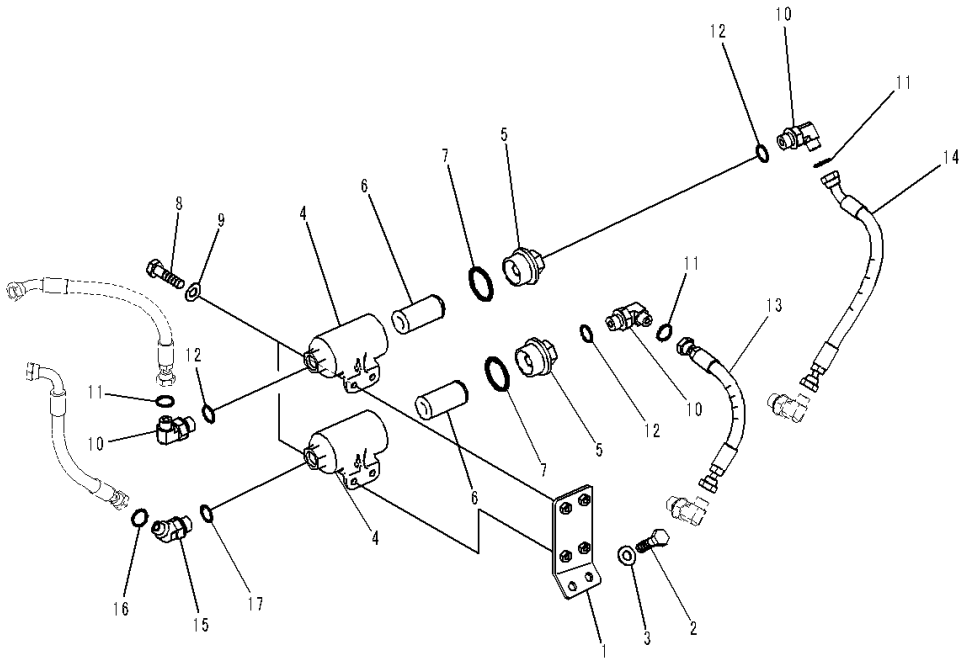

Index	Code	Part Number	Description	Qty	Serial Number
1		421-U44-4560	Bracket	1	90216-
2		01010-81230	Bolt	2	90216-
3		01643-31232	Washer	2	90216-
4		421-43-22562	Case	2	90216-
5		421-43-22571	Cap	2	90216-
6		421-43-27920	Strainer	2	90216-
7		07002-25234	O-ring	2	90216-
8		01010-81030	Bolt	4	90216-
9		01643-31032	Washer	4	90216-
10		02782-10425	Elbow	3	90216-
11		02896-21012	O-ring	3	90216-
12		07002-22434	O-ring	3	90216-
13		421-U44-4730	Hose	1	90216-
14		17A-61-41580	Hose	1	90216-
15		22B-62-18940	Elbow	1	90216-
16		02896-21012	O-ring	1	90216-
17		07002-22434	O-ring	1	90216-

FIG. K4460-009018 Brake Control (With Orbitrol Steering System, Brake Oil Cooling System) (Hose)

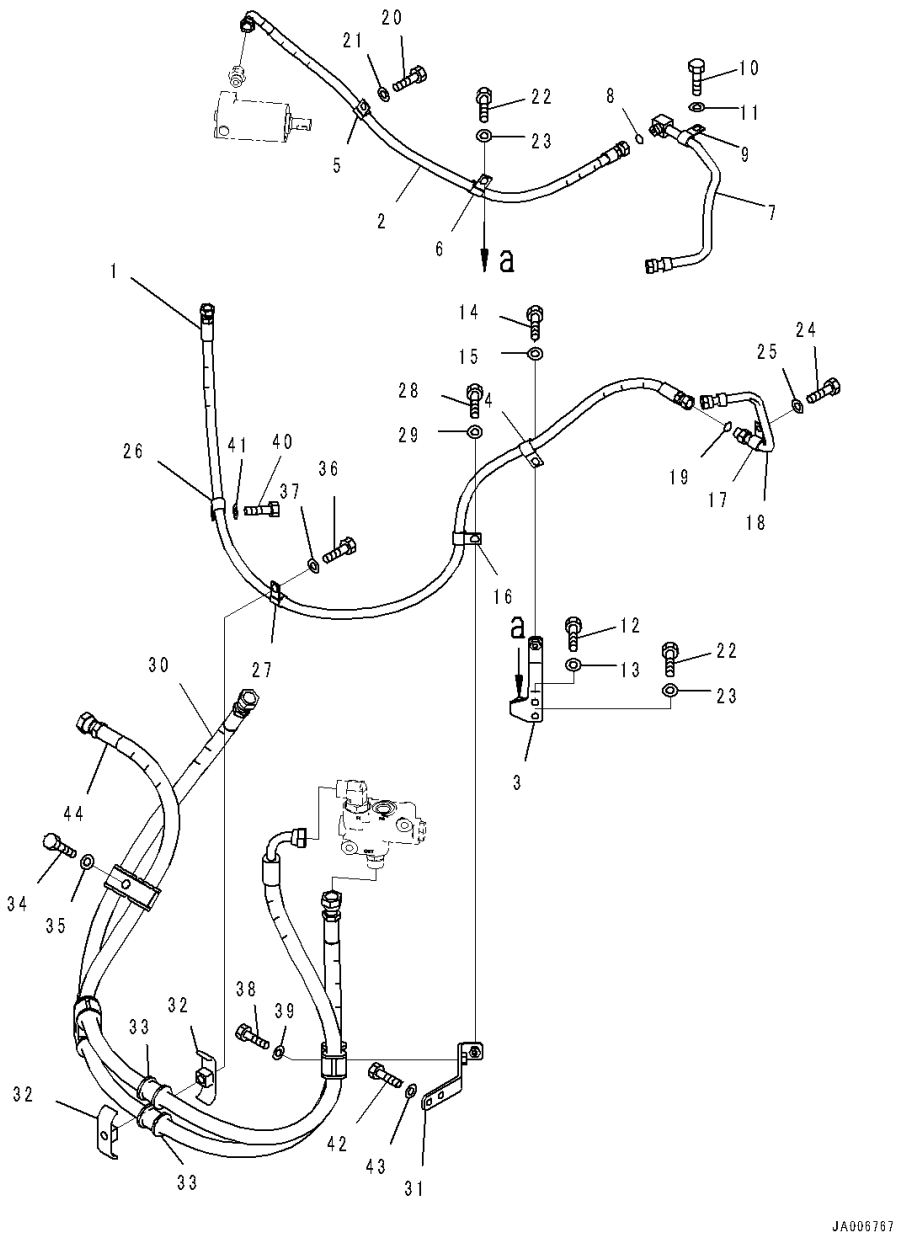

Index	Code	Part Number	Description	Qty	Serial Number
1		421-U44-4850	Hose	1	90216-
2		421-U44-4890	Hose	1	90216-
3		421-U44-4390	Bracket	1	90216-
4		04434-51610	Clip	1	90216-
5		04434-51610	Clip	1	90216-
6		04434-51610	Clip	1	90216-
7		421-U45-4120	Tube	1	90216-
8		02896-21009	O-ring	1	90216-
9		04434-51510	Clip	1	90216-
10		01010-81020	Bolt	1	90216-
11		01643-31032	Washer	1	90216-
12		01010-81020	Bolt	1	90216-
13		01643-31032	Washer	1	90216-
14		01010-81020	Bolt	1	90216-
15		01643-31032	Washer	1	90216-
16		04434-51610	Clip	1	90216-
17		04434-51510	Clip	1	90216-
18		421-U45-4130	Tube	1	90216-
19		02896-21009	O-ring	1	90216-
20		01010-81020	Bolt	1	90216-
21		01643-31032	Washer	1	90216-
22		01010-81020	Bolt	2	90216-
23		01643-31032	Washer	2	90216-
24		01010-81020	Bolt	1	90216-
25		01643-31032	Washer	1	90216-
26		04434-51612	Clip	1	90216-
27		04434-51612	Clip	1	90216-
28		01010-81025	Bolt	1	90216-
29		01643-31032	Washer	1	90216-
30		421-U44-4720	Hose	1	90216-
31		421-U44-4490	Bracket	1	90216-
32		22P-62-13550	Clamp	8	90216-
33		07095-00524	Cushion	8	90216-
34		01010-81265	Bolt	1	90216-
35		01643-31232	Washer	1	90216-
36		01010-81265	Bolt	1	90216-
37		01643-31232	Washer	1	90216-
38		01010-81270	Bolt	1	90216-
39		01643-31232	Washer	1	90216-
40		01010-81265	Bolt	1	90216-

FIG. K4460-009018 Brake Control (With Orbitrol Steering System, Brake Oil Cooling System) (Hose)

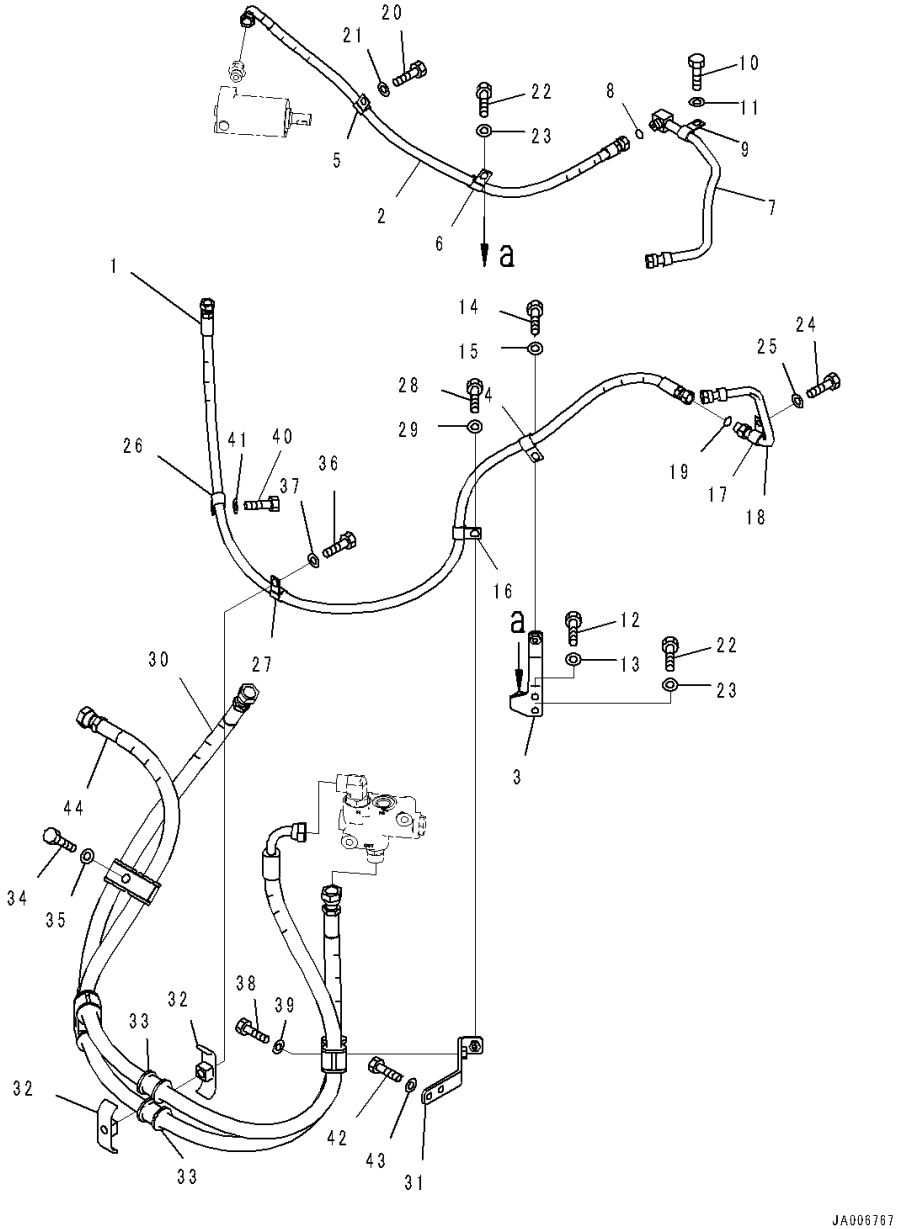

Index	Code	Part Number	Description	Qty	Serial Number
41		01643-31232	Washer	1	90216-
42		01010-81020	Bolt	2	90216-
43		01643-31032	Washer	2	90216-
44		421-U44-4710	Hose	1	90216-

FIG. K4460-009019 Brake Control (With Orbitrol Steering System, Brake Oil Cooling System) (Suction Piping)

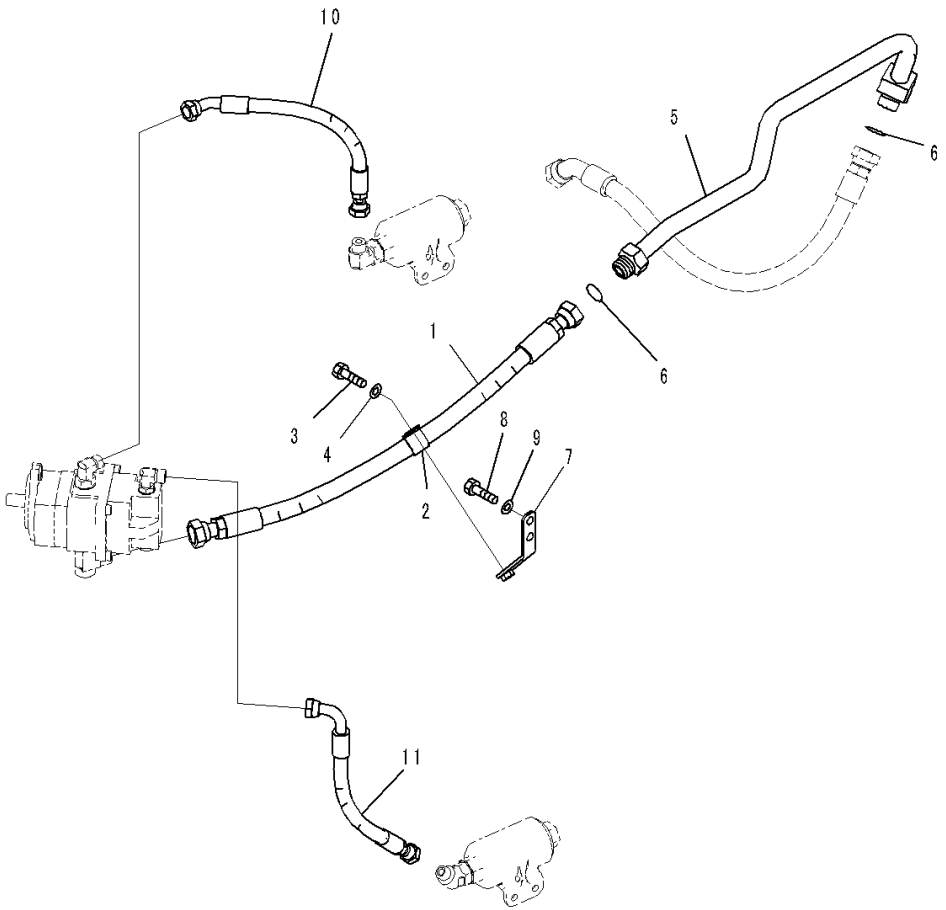

Index	Code	Part Number	Description	Qty	Serial Number
1		421-U44-4840	Hose	1	90216-
2		04434-52711	Clip	1	90216-
3		01010-81025	Bolt	1	90216-
4		01643-31032	Washer	1	90216-
5		421-U45-4140	Tube	1	90216-
6		02896-21018	O-ring	2	90216-
7		421-U44-4480	Bracket	1	90216-
8		01010-81020	Bolt	2	90216-
9		01643-31032	Washer	2	90216-
10		421-U44-4820	Hose	1	90216-
11		421-U44-4830	Hose	1	90216-

FIG. K4460-009020 Brake Control (With Orbitrol Steering System, Brake Oil Cooling System) (Oil Cooler)

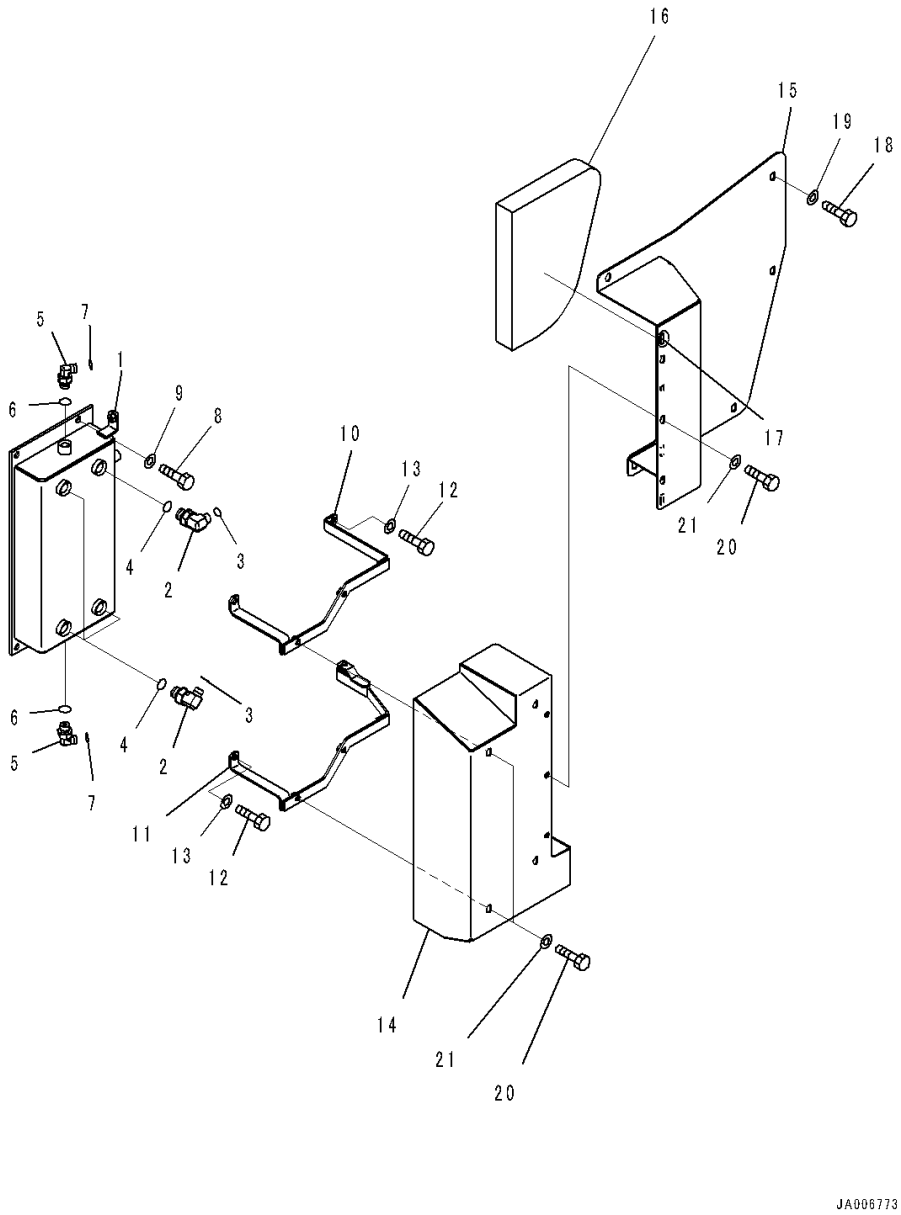

Index	Code	Part Number	Description	Qty	Serial Number
1		421-U44-4860	Oil Cooler	1	90216-
2		02782-10425	Elbow	4	90216-
3		02896-21012	O-ring	4	90216-
4		07002-22434	O-ring	4	90216-
5		02782-10315	Elbow	2	90216-
6		07002-22034	O-ring	2	90216-
7		02896-21009	O-ring	2	90216-
8		01010-81225	Bolt	4	90216-
9		01643-31232	Washer	4	90216-
10		421-U44-4660	Bracket	1	90216-
11		421-U45-4340	Bracket	1	90216-
12		01010-81020	Bolt	4	90216-
13		01643-31032	Washer	4	90216-
14		421-U44-4870	Cover	1	90216-
15		421-U45-4380	Cover	1	90216-
16		421-U45-4240	• Sheet	1	90216-
17		421-09-21420	• Sheet	4	90216-
18		01010-D1220	Bolt	5	90216-
19		01643-71232	Washer	5	90216-
20		01010-D1020	Bolt	7	90216-
21		01643-71032	Washer	7	90216-

FIG. K4460-009021 Brake Control (With Orbitrol Steering System, Brake Oil Cooling System) (Cooling Piping, Rear)

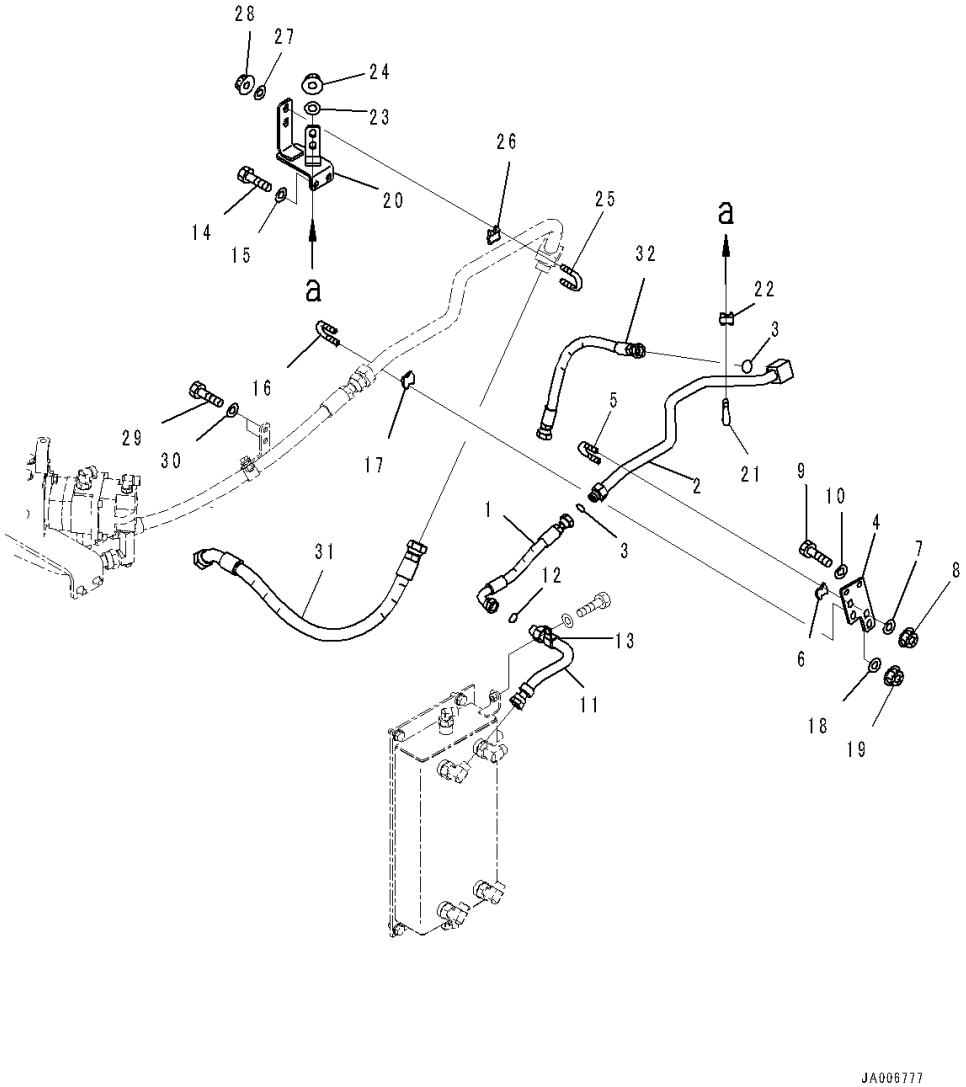

Index	Code	Part Number	Description	Qty	Serial Number
1		421-U44-4810	Hose	1	90216-
2		421-U44-4980	Tube	1	90216-
3		02896-21012	O-ring	2	90216-
4		421-U44-4370	Bracket	1	90216-
5		07283-32236	Clip, Pipe	1	90216-
6		07283-52232	Seat	1	90216-
7		01643-31032	Washer	2	90216-
8		01597-01009	Nut	2	90216-
9		01010-81020	Bolt	2	90216-
10		01643-31032	Washer	2	90216-
11		421-U44-4990	Tube	1	90216-
12		02896-21012	O-ring	1	90216-
13		04434-52110	Clip	1	90216-
14		01010-81020	Bolt	1	90216-
15		01643-31032	Washer	1	90216-
16		07283-32738	Clip, Pipe	1	90216-
17		07283-52737	Seat	1	90216-
18		01643-31032	Washer	2	90216-
19		01597-01009	Nut	2	90216-
20		421-U44-4380	Bracket	1	90216-
21		07283-32236	Clip, Pipe	1	90216-
22		07283-52232	Seat	1	90216-
23		01643-31032	Washer	2	90216-
24		01597-01009	Nut	2	90216-
25		07283-32738	Clip, Pipe	1	90216-
26		07283-52737	Seat	1	90216-
27		01643-31032	Washer	2	90216-
28		01597-01009	Nut	2	90216-
29		01010-81020	Bolt	2	90216-
30		01643-31032	Washer	2	90216-
31		421-U44-4780	Hose	1	90216-
32		421-U44-4920	Hose	1	90216-

FIG. K4460-009022 Brake Control (With Orbitrol Steering System, Brake Oil Cooling System) (Cooling Piping, Front) (1/2)

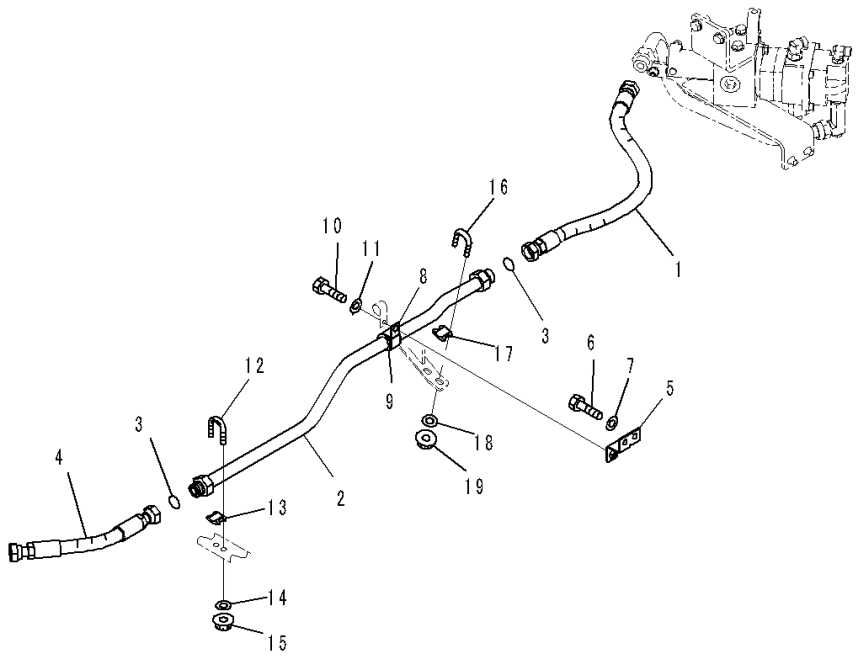

JA006782

Index	Code	Part Number	Description	Qty	Serial Number
1		421-U44-4760	Hose	1	90216-
2		421-U44-4440	Tube	1	90216-
3		02896-21018	O-ring	2	90216-
4		02762-006A3	Hose, Face Seal Type, L=350mm	1	90216-
5		421-U44-4420	Bracket	1	90216-
6		01010-D1025	Bolt	2	90216-
7		01643-71032	Washer	2	90216-
8		04434-53411	Clip	1	90216-
9		07095-20627	Cushion	1	90216-
10		01010-81025	Bolt	1	90216-
11		01643-31032	Washer	1	90216-
12		07283-32738	Clip, Pipe	1	90216-
13		07283-52737	Seat	1	90216-
14		01643-31032	Washer	2	90216-
15		01597-01009	Nut	2	90216-
16		07283-32738	Clip, Pipe	1	90216-
17		07283-52737	Seat	1	90216-
18		01643-31032	Washer	2	90216-
19		01597-01009	Nut	2	90216-

FIG. K4460-009023 Brake Control (With Orbitrol Steering System, Brake Oil Cooling System) (Cooling Piping, Front) (2/2)

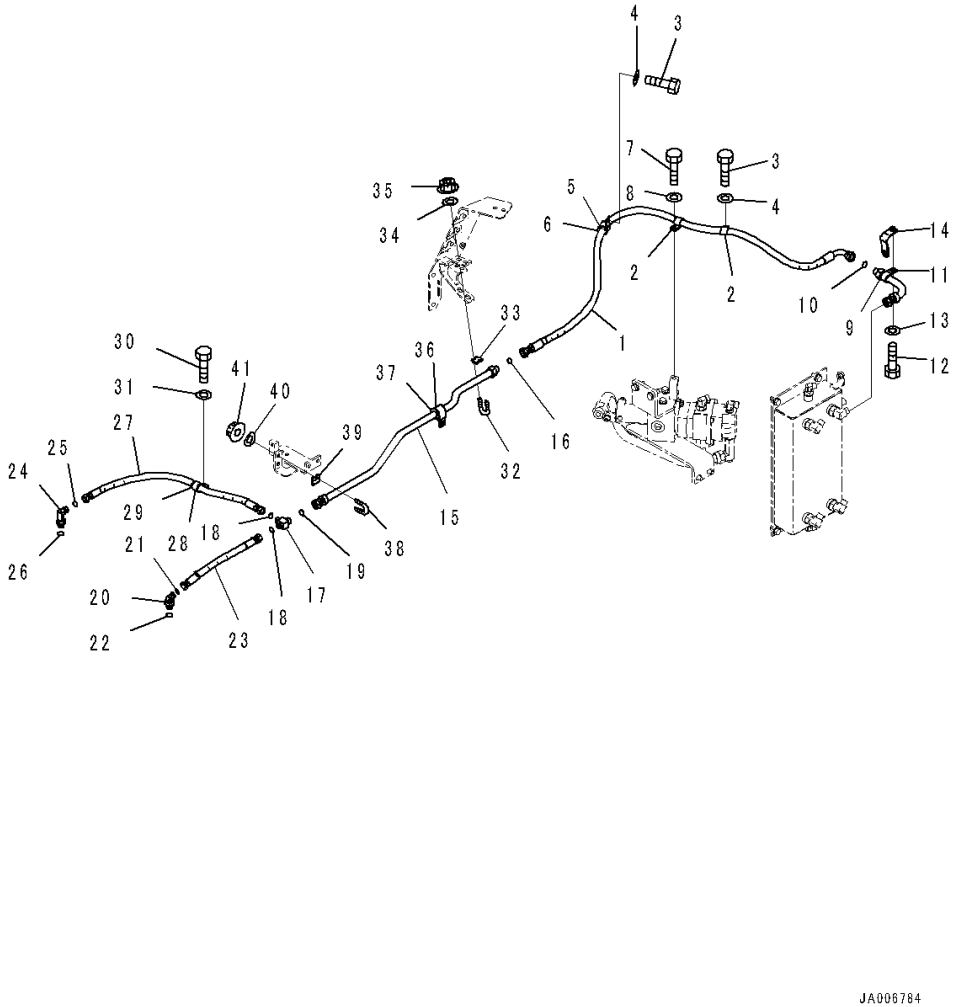

Index	Code	Part Number	Description	Qty	Serial Number
1		421-U44-4750	Hose	1	90216-
2		04434-51910	Clip	2	90216-
3		01010-81025	Bolt	2	90216-
4		01643-31032	Washer	2	90216-
5		04434-52711	Clip	1	90216-
6		07095-20420	Cushion	1	90216-
7		01010-81025	Bolt	1	90216-
8		01643-31032	Washer	1	90216-
9		421-U45-4110	Tube	1	90216-
10		02896-21012	O-ring	1	90216-
11		04434-52110	Clip	1	90216-
12		01010-81020	Bolt	1	90216-
13		01643-31032	Washer	1	90216-
14		421-U44-4550	Bracket	1	90216-
15		421-U44-4430	Tube	1	90216-
16		02896-21012	O-ring	1	90216-
17		421-U44-3820	Tee	1	90216-
18		02896-21009	O-ring	2	90216-
19		02896-21012	O-ring	1	90216-
20		20U-62-41860	Elbow	1	90216-
21		02896-21009	O-ring	1	90216-
22		07002-21823	O-ring	1	90216-
23		02762-00303	Hose, Face Seal Type	1	90216-
24		02782-1031B	Elbow	1	90216-
25		02896-21009	O-ring	1	90216-
26		07002-21823	O-ring	1	90216-
27		421-U44-4460	Hose	1	90216-
28		04434-52110	Clip	1	90216-
29		07095-20314	Cushion	1	90216-
30		01010-81020	Bolt	1	90216-
31		01643-31032	Washer	1	90216-
32		07283-32236	Clip, Pipe	1	90216-
33		07283-52232	Seat	1	90216-
34		01643-31032	Washer	2	90216-
35		01597-01009	Nut	2	90216-
36		04434-53211	Clip	1	90216-
37		07095-20522	Cushion	1	90216-
38		07283-32236	Clip, Pipe	1	90216-
39		07283-52232	Seat	1	90216-

FIG. K4460-009023 Brake Control (With Orbitrol Steering System, Brake Oil Cooling System) (Cooling Piping, Front) (2/2)

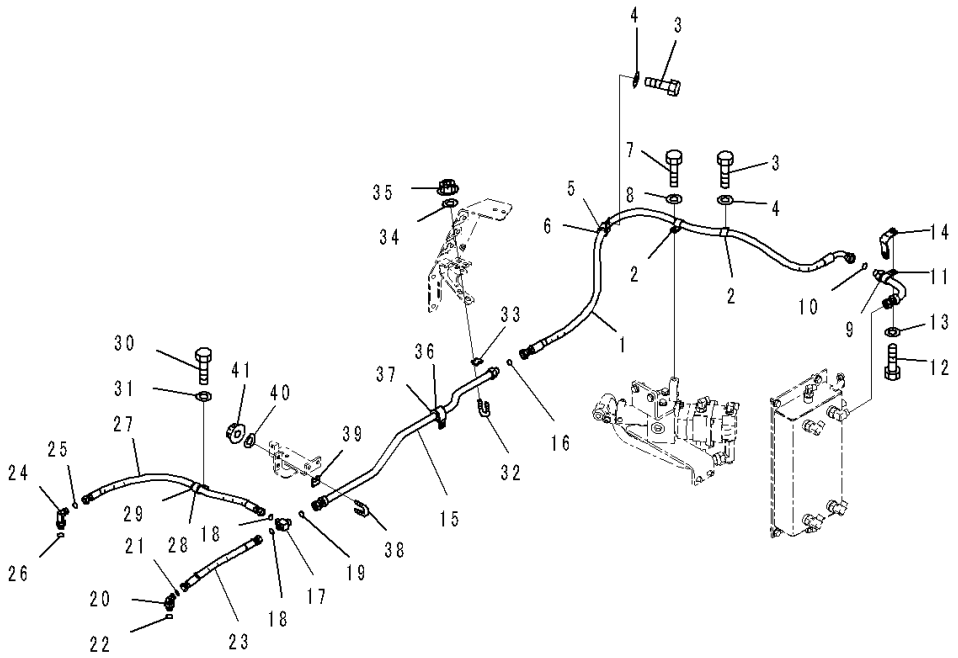

Index	Code	Part Number	Description	Qty	Serial Number
40		01643-31032	Washer	2	90216-
41		01597-01009	Nut	2	90216-

FIG. K4470-003001 Brake Piping (Front Axle Piping)

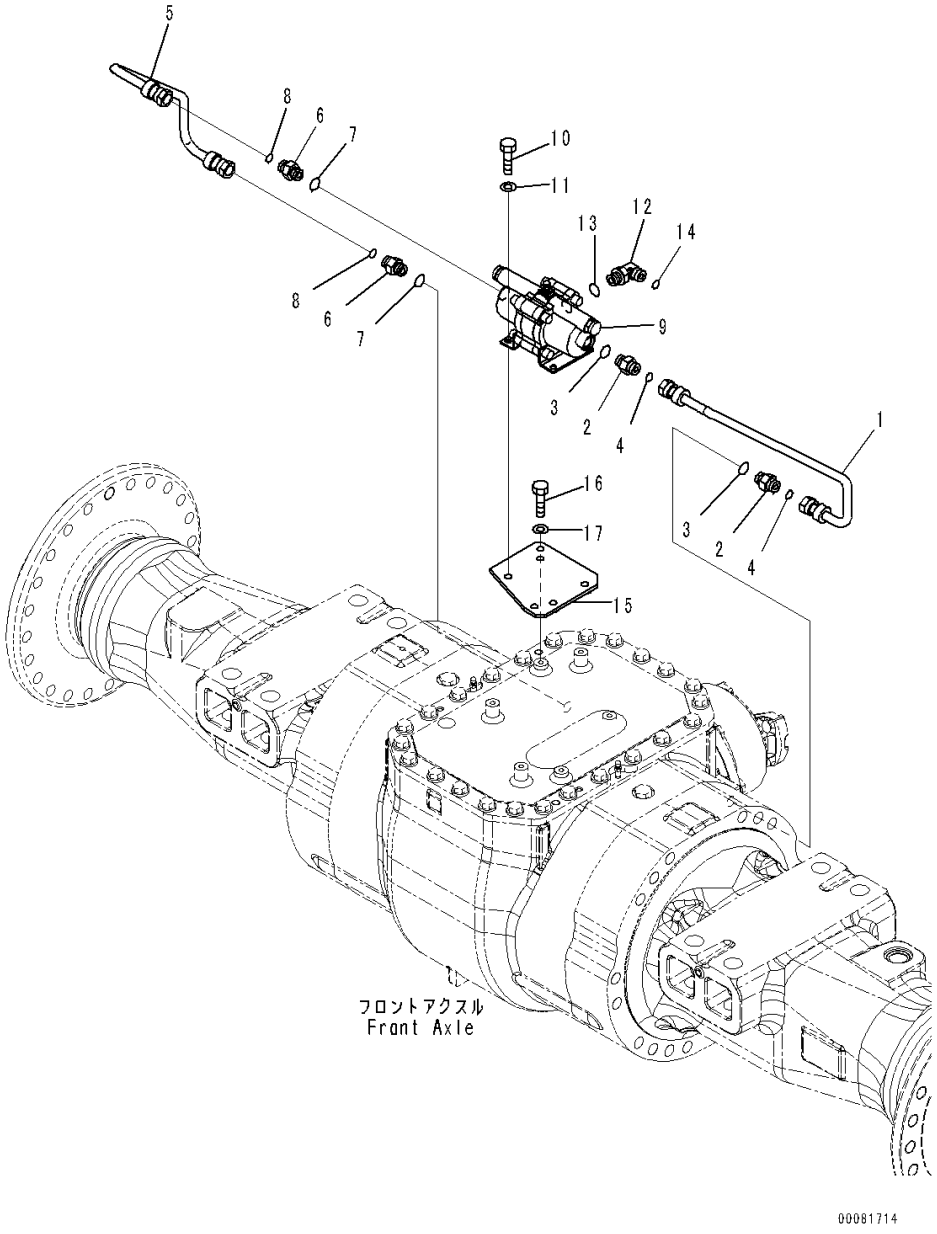

Index	Code	Part Number	Description	Qty	Serial Number
		Note: This list covers following specifications.			
		Without Brake Oil Cooling System			
		With Brake Oil Cooling System			
1		421-43-41110	Tube	1	90216-
2		02781-00422	Union	2	90216-
3		07002-12034	O-ring	2	90216-
4		02896-11012	O-ring	2	90216-
5		421-43-41120	Tube	1	90216-
6		02781-00422	Union	2	90216-
7		07002-12034	O-ring	2	90216-
8		02896-11012	O-ring	2	90216-
9		421-35-45200	Valve, Slack Adjuster	1	90216-
10		01010-81025	Bolt	4	90216-
11		01643-31032	Washer	4	90216-
12		02782-10422	Elbow	1	90216-
13		07002-12034	O-ring	1	90216-
14		02896-11012	O-ring	1	90216-
15		421-43-41130	Plate	1	90216-
16		01010-81025	Bolt	2	90216-
17		01643-31032	Washer	2	90216-

FIG. K4470-003002 Brake Piping (Without Brake Oil Cooling System) (Rear Axle Piping)

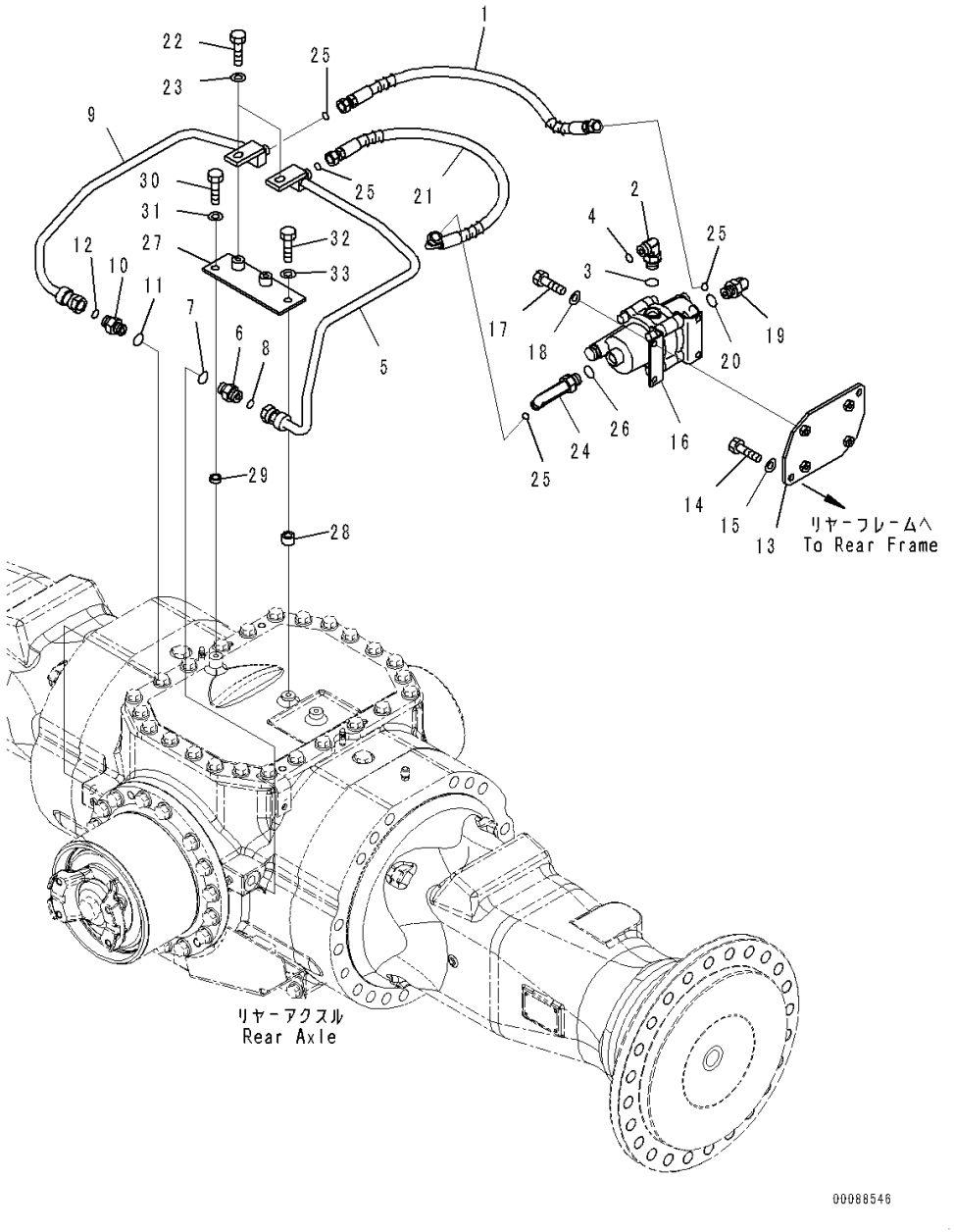

Index	Code	Part Number	Description	Qty	Serial Number
1		02753-203A7	Hose, Face Seal Type	1	90216-
2		02782-10422	Elbow	1	90216-
3		07002-12034	O-ring	1	90216-
4		02896-11012	O-ring	1	90216-
5		421-43-47620	Tube	1	90216-
6		02781-00422	Union	1	90216-
7		07002-12034	O-ring	1	90216-
8		02896-11012	O-ring	1	90216-
9		421-43-47630	Tube	1	90216-
10		02781-00422	Union	1	90216-
11		07002-12034	O-ring	1	90216-
12		02896-11012	O-ring	1	90216-
13		421-43-47510	Plate	1	90216-
14		01010-81025	Bolt	2	90216-
15		01643-31032	Washer	2	90216-
16		421-35-45200	Valve, Slack Adjuster	1	90216-
17		01010-81025	Bolt	4	90216-
18		01643-31032	Washer	4	90216-
19		02782-10315	Elbow	1	90216-
20		07002-12034	O-ring	1	90216-
21		421-43-47260	Hose	1	90216-
22		01010-81025	Bolt	2	90216-
23		01643-31032	Washer	2	90216-
24		02782-10317	Elbow	1	90216-
25		02896-11009	O-ring	4	90216-
26		07002-12034	O-ring	1	90216-
27		421-43-47640	Plate	1	90216-
28		418-09-11130	Spacer	1	90216-
29		205-54-75870	Collar	1	90216-
30		01010-81030	Bolt	1	90216-
31		01643-31032	Washer	1	90216-
32		01010-81040	Bolt	1	90216-
33		01643-31032	Washer	1	90216-

FIG. K4470-004002 Brake Piping (With Brake Oil Cooling System) (Rear Axle Piping)

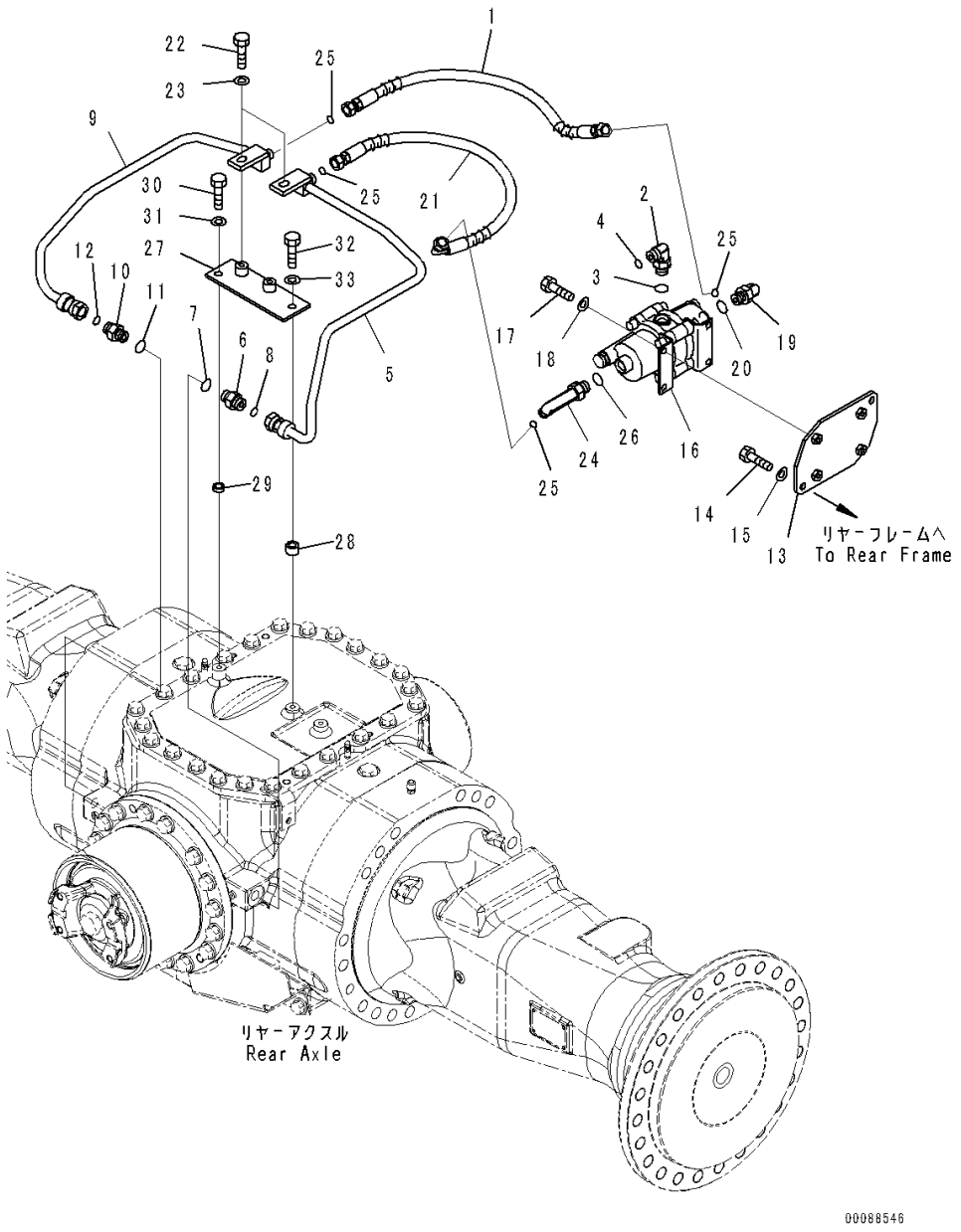

Index	Code	Part Number	Description	Qty	Serial Number
1		02753-203A7	Hose, Face Seal Type	1	90216-
2		02782-10422	Elbow	1	90216-
3		07002-12034	O-ring	1	90216-
4		02896-11012	O-ring	1	90216-
5		421-U45-4360	Tube	1	90216-
6		02781-00422	Union	1	90216-
7		07002-12034	O-ring	1	90216-
8		02896-11012	O-ring	1	90216-
9		421-43-47630	Tube	1	90216-
10		02781-00422	Union	1	90216-
11		07002-12034	O-ring	1	90216-
12		02896-11012	O-ring	1	90216-
13		421-43-47510	Plate	1	90216-
14		01010-81025	Bolt	2	90216-
15		01643-31032	Washer	2	90216-
16		421-35-45200	Valve, Slack Adjuster	1	90216-
17		01010-81025	Bolt	4	90216-
18		01643-31032	Washer	4	90216-
19		02782-10315	Elbow	1	90216-
20		07002-12034	O-ring	1	90216-
21		421-43-47260	Hose	1	90216-
22		01010-81025	Bolt	2	90216-
23		01643-31032	Washer	2	90216-
24		02782-10317	Elbow	1	90216-
25		02896-11009	O-ring	4	90216-
26		07002-12034	O-ring	1	90216-
27		421-43-47640	Plate	1	90216-
28		418-09-11130	Spacer	1	90216-
29		205-54-75870	Collar	1	90216-
30		01010-81030	Bolt	1	90216-
31		01643-31032	Washer	1	90216-
32		01010-81040	Bolt	1	90216-
33		01643-31032	Washer	1	90216-

FIG. K4504-001001 Bucket Positioner (Without Log Grapple)

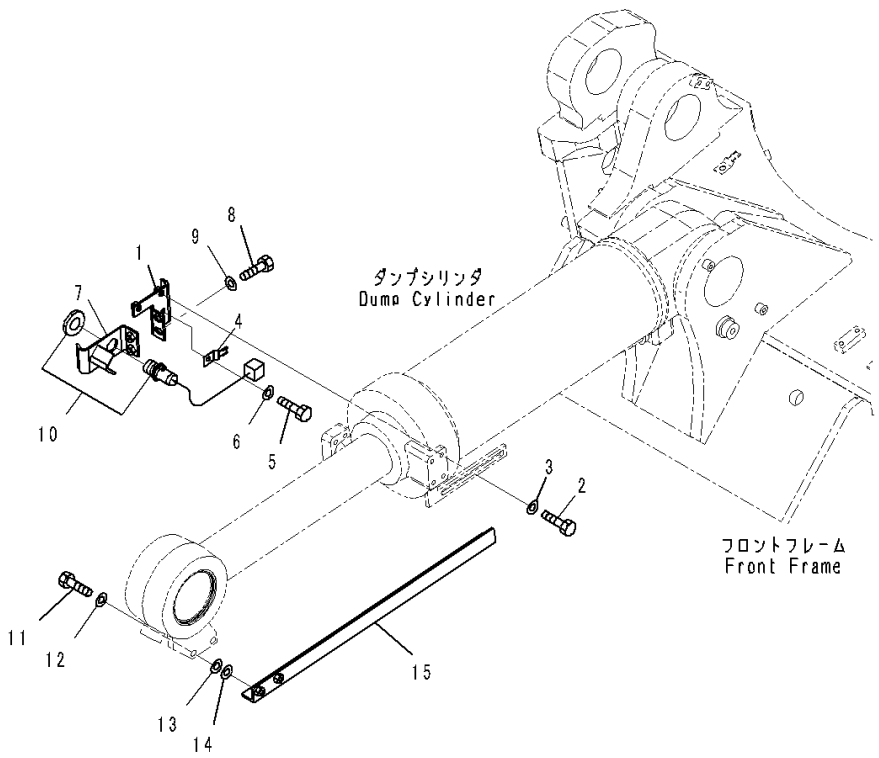

Index	Code	Part Number	Description	Qty	Serial Number
1		421-43-29110	Bracket	1	90216-
2		01010-81235	Bolt	2	90216-
3		01643-31232	Washer	2	90216-
4		08193-20010	Clip	1	90216-
5		01010-81020	Bolt	1	90216-
6		01643-31032	Washer	1	90216-
7		421-43-29120	Bracket	1	90216-
8		01010-81225	Bolt	2	90216-
9		01643-31232	Washer	2	90216-
10		56B-06-15610	Switch	1	90216-
11		01010-81240	Bolt	2	90216-
12		01643-31232	Washer	2	90216-
13		6113-63-1630	Shim, T=0.2mm	2	90216-
14		6113-63-1640	Shim, T=0.5mm	1	90216-
15		421-43-39110	Bar	1	90216-

FIG. K4504-002001 Bucket Positioner (With Log Grapple)

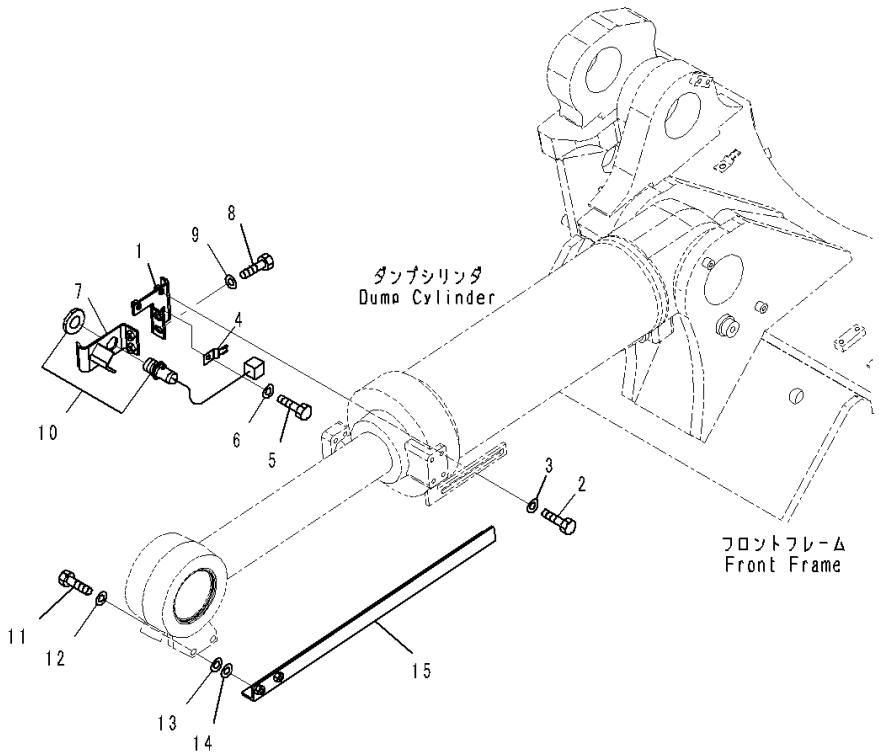

Index	Code	Part Number	Description	Qty	Serial Number
1		421-43-29110	Bracket	1	90216-
2		01010-81235	Bolt	2	90216-
3		01643-31232	Washer	2	90216-
4		08193-20010	Clip	1	90216-
5		01010-81020	Bolt	1	90216-
6		01643-31032	Washer	1	90216-
7		421-43-29120	Bracket	1	90216-
8		01010-81225	Bolt	2	90216-
9		01643-31232	Washer	2	90216-
10		56B-06-15610	Switch	1	90216-
11		01010-81240	Bolt	2	90216-
12		01643-31232	Washer	2	90216-
13		6113-63-1630	Shim, T=0.2mm	2	90216-
14		6113-63-1640	Shim, T=0.5mm	1	90216-
15		421-870-3120	Bar	1	90216-

GUARDS AND COVERS

FIG. M4100-020001 Hood (Hood and Frame)

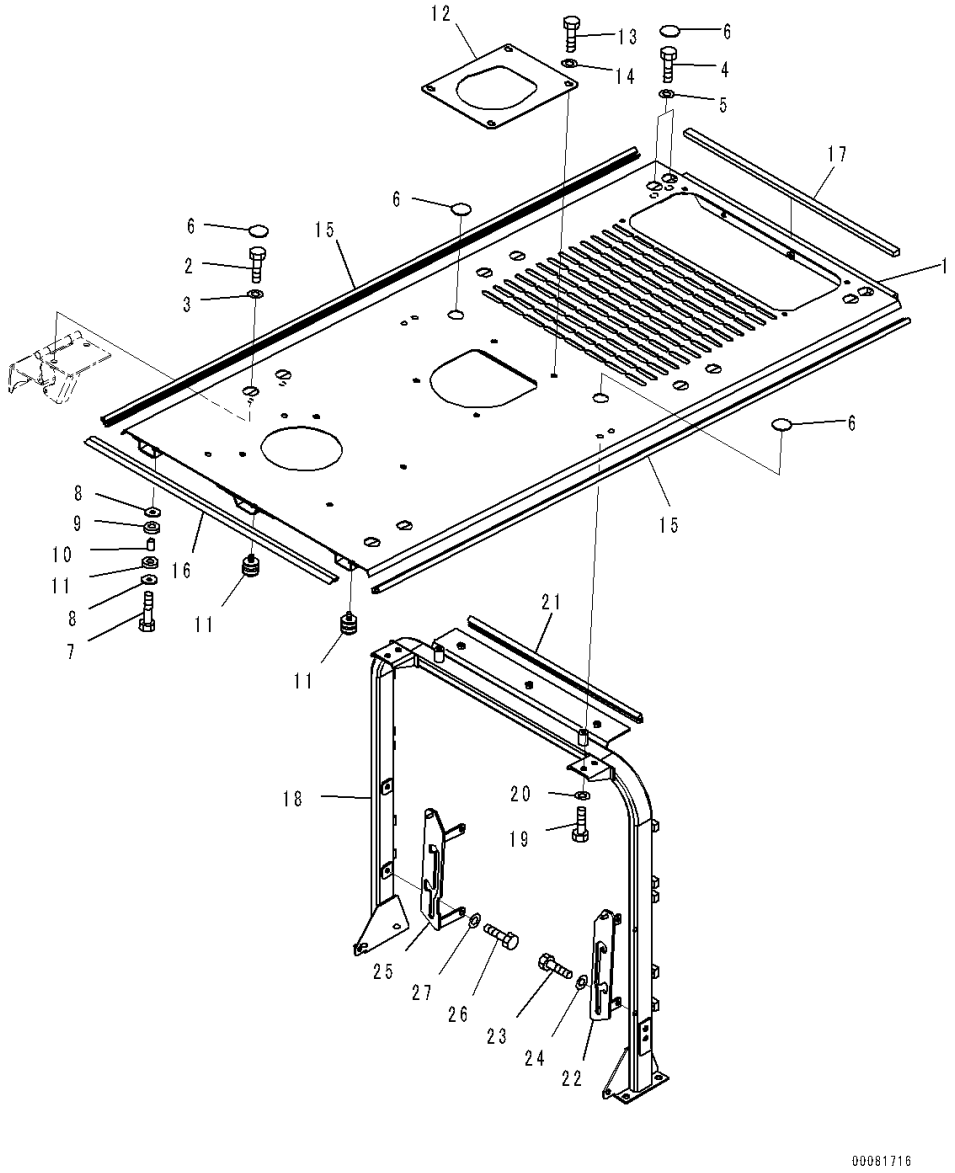

Index	Code	Part Number	Description	Qty	Serial Number
		Note: This list covers following specifications.			
		Air Intake Extension, Cap Type			
		Air Intake Extension, Cap Type, For EU Safety Regulation			
		Air Intake Extension, Pre-cleaner Type			
		Air Intake Extension, Pre-cleaner Type, For EU Safety Regulation			
		Air Intake Extension, Pre-cleaner Turbo 2 Type			
		Air Intake Extension, Pre-cleaner Turbo 2 Type, For EU Safety Regulation			
1		421-54-41112	Hood	1	90216-
2		01010-81225	Bolt	8	90216-
3		01643-31232	Washer	8	90216-
4		01010-81230	Bolt	4	90216-
5		01643-31232	Washer	4	90216-
6		195-54-42981	Cap	14	90216-
7		01010-81250	Bolt	3	90216-
8		419-43-17920	Washer	6	90216-
9		419-43-17930	Cushion	3	90216-
10		417-62-14130	Spacer	3	90216-
11		417-62-13620	Cushion	3	90216-
12		421-54-42690	Cover	1	90216-
13		01010-81225	Bolt	4	90216-
14		01643-31232	Washer	4	90216-
15		417-54-21390	Seal	2	90216-
16		421-54-48180	Seal	1	90216-
17		421-54-43580	Seal	1	90216-
18		421-54-41121	Frame	1	90216-
19		01010-81225	Bolt	4	90216-
20		01643-31232	Washer	4	90216-
21		421-54-41320	Seal, Door	1	90216-
22		421-54-43551	Guide, L.H.	1	90216-
23		01010-81025	Bolt	2	90216-
24		01643-31032	Washer	2	90216-
25		421-54-43561	Guide, R.H.	1	90216-
26		01010-81025	Bolt	2	90216-
27		01643-31032	Washer	2	90216-

FIG. M4100-020002 Hood (Lower Cover)

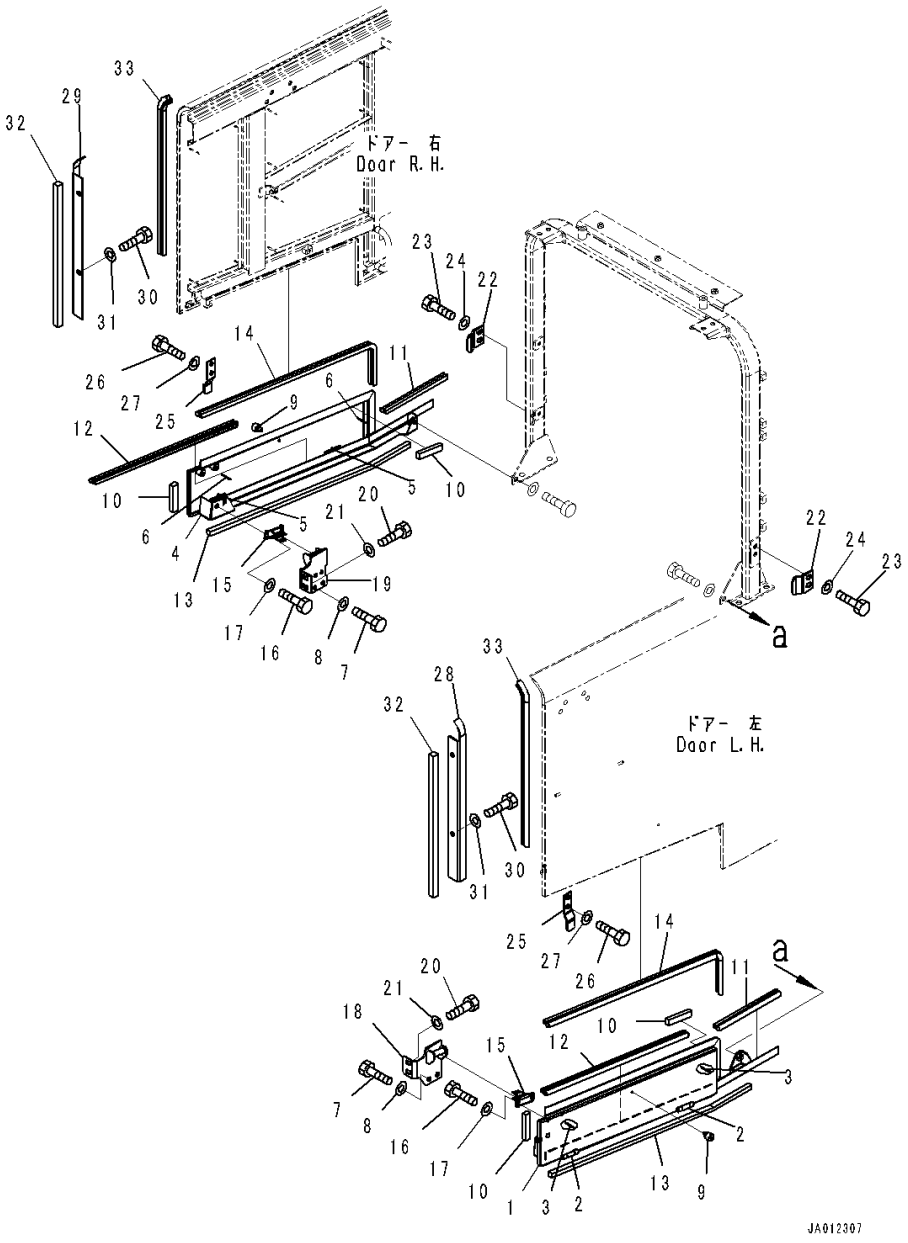

Index	Code	Part Number	Description	Qty	Serial Number
		Note: This list covers following specifications.			
		Air Intake Extension, Cap Type			
		Air Intake Extension, Cap Type, With Rear Full Fender			
		Air Intake Extension, Cap Type, For EU Safety Regulation			
		Air Intake Extension, Cap Type, With Rear Full Fender, For EU Safety Regulation			
		Air Intake Extension, Pre-cleaner Type			
		Air Intake Extension, Pre-cleaner Type, With Rear Full Fender			
		Air Intake Extension, Pre-cleaner Type, For EU Safety Regulation			
		Air Intake Extension, Pre-cleaner Type, With Rear Full Fender, For EU Safety Regulation			
		Air Intake Extension, Pre-cleaner Turbo 2 Type			
		Air Intake Extension, Pre-cleaner Turbo 2 Type, With Rear Full Fender			
		Air Intake Extension, Pre-cleaner Turbo 2 Type, For EU Safety Regulation			
		Air Intake Extension, Pre-cleaner Turbo 2 Type, With Rear Full Fender, For EU Safety Regulation			
1		421-54-41211	Cover, L.H.	1	90216-
2		423-54-41340	• Hinge, Welded	2	90216-
3		421-54-42480	• Stud, Welded	2	90216-
4		421-54-41221	Cover, R.H.	1	90216-
5		423-54-41340	• Hinge, Welded	2	90216-
6		421-54-42480	• Stud, Welded	2	90216-
7		01010-81225	Bolt	2	90216-
8		01643-31232	Washer	2	90216-
9		415-54-11980	Cushion	2	90216-
10		421-54-42290	Sheet	4	90216-
11		421-54-41410	Seal, Door	2	90216-
12		421-54-41420	Seal, Door	2	90216-
13		421-54-41430	Seal	2	90216-
14		421-54-41440	Seal, Door	2	90216-
15		20Y-54-12920	Clamp	2	90216-
16		01010-81020	Bolt	4	90216-
17		01643-31032	Washer	4	90216-
18		421-54-45210	Bracket	1	90216-
19		421-54-45220	Bracket	1	90216-
20		01010-81225	Bolt	8	90216-

FIG. M4100-020002 Hood (Lower Cover)

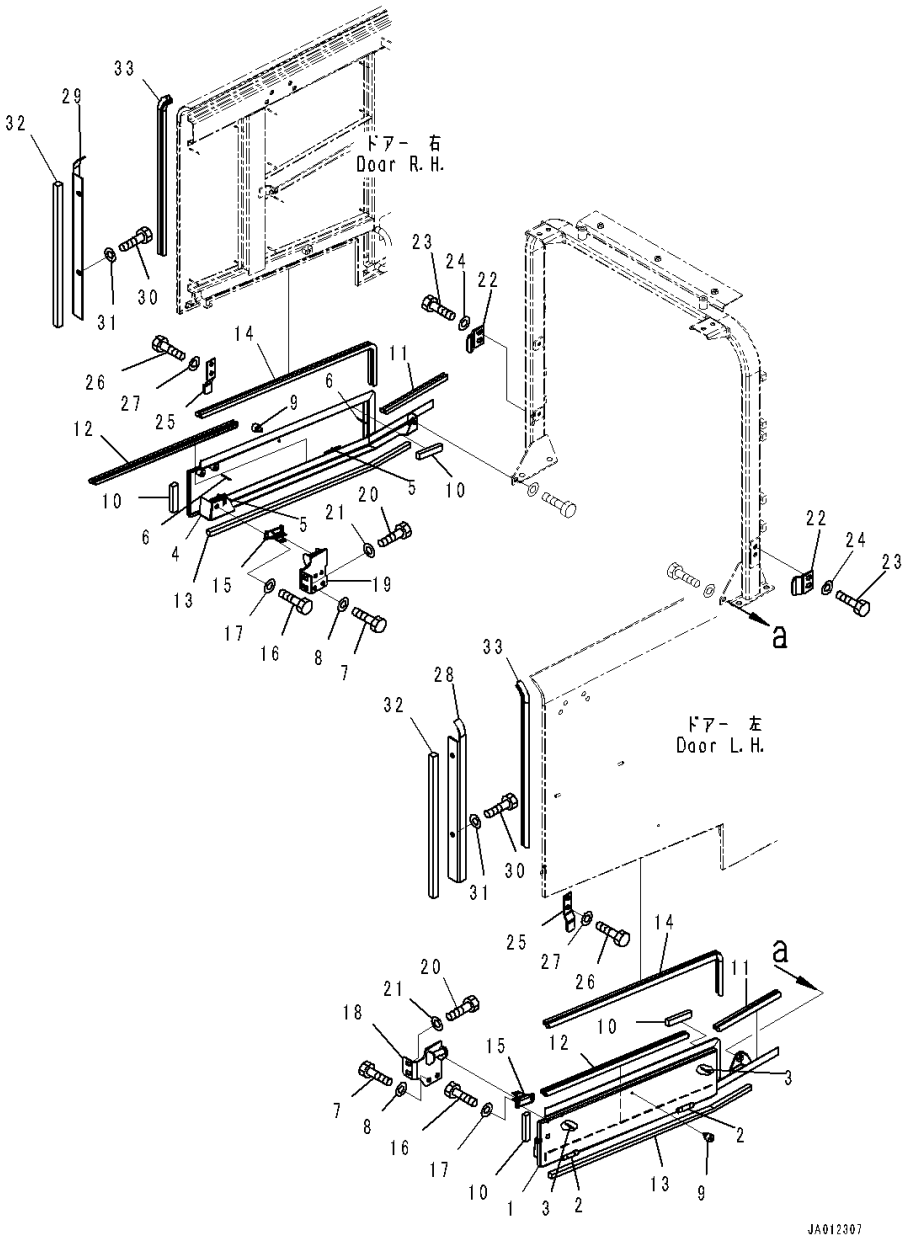

Index	Code	Part Number	Description	Qty	Serial Number
21		01643-31232	Washer	8	90216-
22		423-54-41312	Plate	2	90216-
23		01010-81225	Bolt	4	90216-
24		01643-31232	Washer	4	90216-
25		423-54-37480	Plate	2	90216-
26		01010-81225	Bolt	4	90216-
27		01643-31232	Washer	4	90216-
28		421-54-41230	Bracket, L.H.	1	90216-
29		421-54-41240	Bracket, R.H.	1	90216-
30		01010-81220	Bolt	4	90216-
31		01643-31232	Washer	4	90216-
32		421-54-41250	Seal	2	90216-
33		421-54-41260	Seal	2	90216-

FIG. M4100-020003 Hood (Air Cleaner Cover)

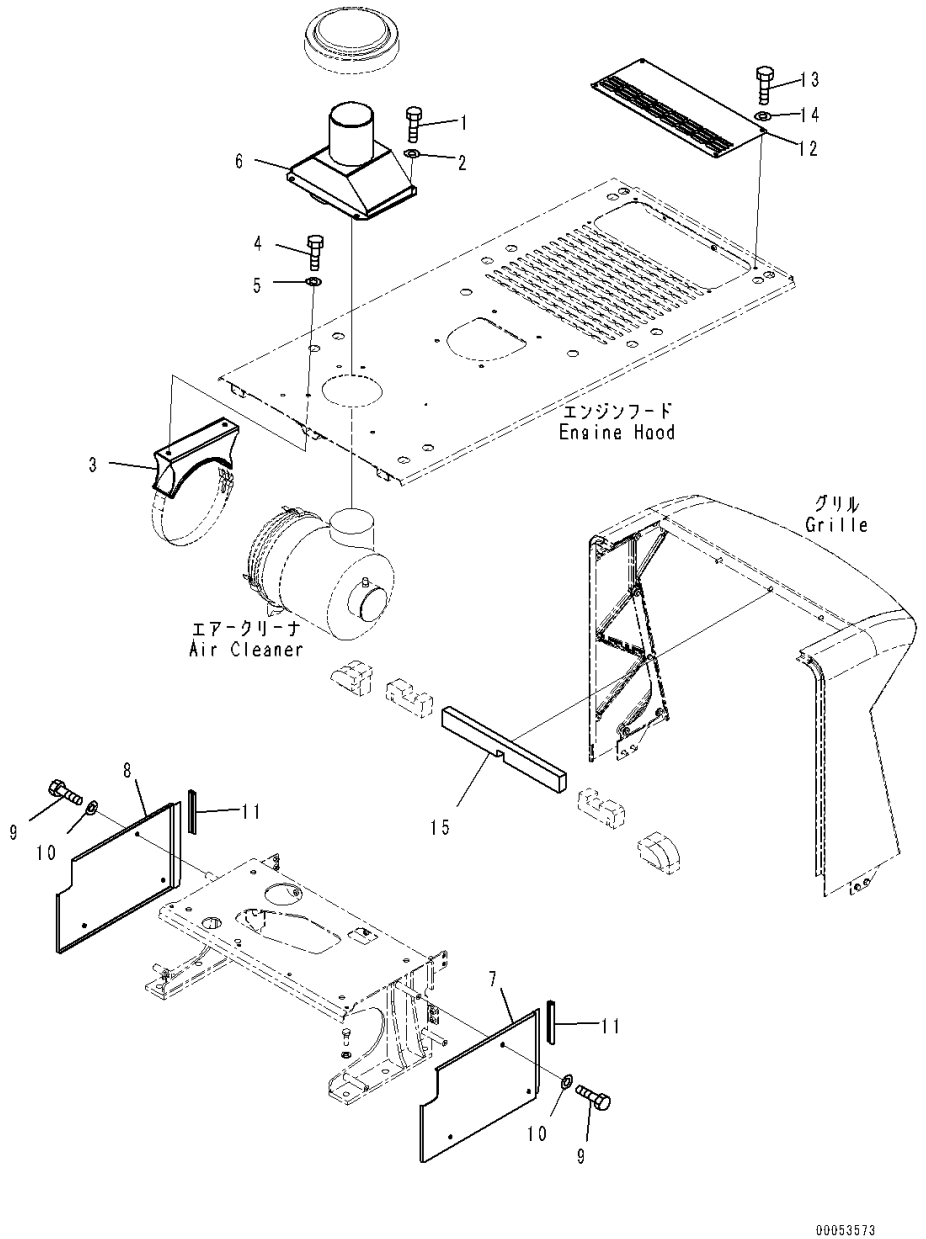

Index	Code	Part Number	Description	Qty	Serial Number
		Note: This list covers following specifications.			
		Air Intake Extension, Cap Type			
		Air Intake Extension, Cap Type, With Rear Full Fender			
		Air Intake Extension, Cap Type, For EU Safety Regulation			
		Air Intake Extension, Cap Type, With Rear Full Fender, For EU Safety Regulation			
		Air Intake Extension, Pre-cleaner Turbo 2 Type			
		Air Intake Extension, Pre-cleaner Turbo 2 Type, With Rear Full Fender			
		Air Intake Extension, Pre-cleaner Turbo 2 Type, For EU Safety Regulation			
		Air Intake Extension, Pre-cleaner Turbo 2 Type, With Rear Full Fender, For EU Safety Regulation			
1		01010-81225	Bolt	4	90216-
2		01643-31232	Washer	4	90216-
3		421-54-41350	Bracket	1	90216-
4		01010-81225	Bolt	2	90216-
5		01643-31232	Washer	2	90216-
6		421-54-41390	Bracket	1	90216-
7		421-54-41910	Cover, L.H.	1	90216-
8		421-54-41920	Cover, R.H.	1	90216-
9		01010-81020	Bolt	6	90216-
10		01643-31032	Washer	6	90216-
11		416-54-21540	Seal	2	90216-
12		421-54-41880	Plate	1	90216-
13		01010-81020	Bolt	4	90216-
14		01643-31032	Washer	4	90216-
15		421-54-42510	Sheet	1	90216-

FIG. M4100-020004 Hood (Baffle) (1/2)

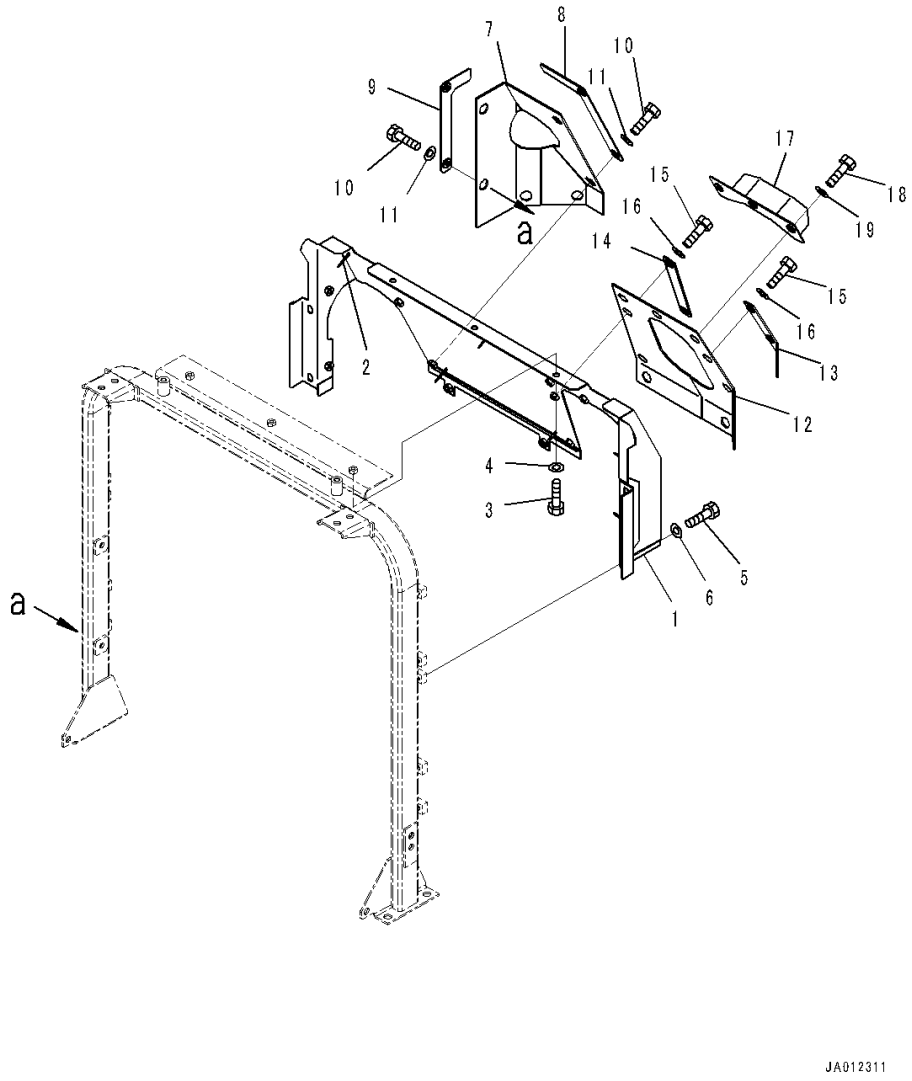

Index	Code	Part Number	Description	Qty	Serial Number
		Note: This list covers following specifications.			
		Air Intake Extension, Cap Type			
		Air Intake Extension, Cap Type, With Rear Full Fender			
		Air Intake Extension, Pre-cleaner Type			
		Air Intake Extension, Pre-cleaner Type, With Rear Full Fender			
		Air Intake Extension, Pre-cleaner Turbo 2 Type			
		Air Intake Extension, Pre-cleaner Turbo 2 Type, With Rear Full Fender			
1		421-54-43431	Cover	1	90216-
2		421-54-42480	• Stud, Welded	8	90216-
3		01010-D1020	Bolt	3	90216-
4		01643-71032	Washer	3	90216-
5		01010-D1016	Bolt	4	90216-
6		01643-71032	Washer	4	90216-
7		421-54-41930	Sheet	1	90216-
8		421-54-41940	Plate	1	90216-
9		421-54-42210	Plate	1	90216-
10		01010-D1020	Bolt	4	90216-
11		01643-71032	Washer	4	90216-
12		421-54-43420	Sheet	1	90216-
13		421-54-43450	Plate	1	90216-
14		421-54-43440	Plate	1	90216-
15		01010-D1020	Bolt	4	90216-
16		01643-71032	Washer	4	90216-
17		421-54-43730	Plate	1	90216-
18		01010-D1020	Bolt	3	90216-
19		01643-71032	Washer	3	90216-

FIG. M4100-020005 Hood (Door and Gas Spring)

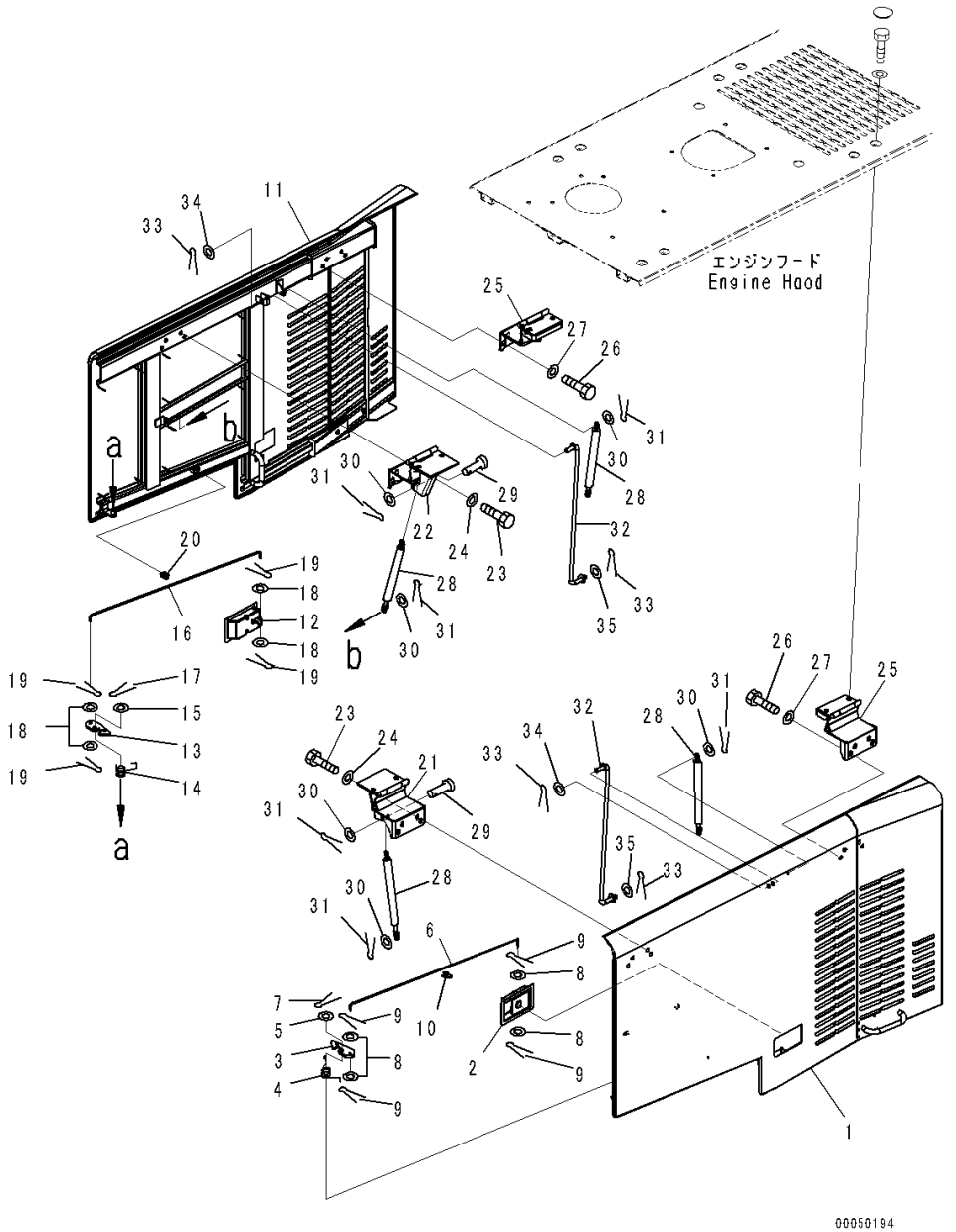

Index	Code	Part Number	Description	Qty	Serial Number
		Note: This list covers following specifications.			
		Air Intake Extension, Cap Type			
		Air Intake Extension, Cap Type, For EU Safety Regulation			
		Air Intake Extension, Pre-cleaner Type			
		Air Intake Extension, Pre-cleaner Type, For EU Safety Regulation			
		Air Intake Extension, Pre-cleaner Turbo 2 Type			
		Air Intake Extension, Pre-cleaner Turbo 2 Type, For EU Safety Regulation			
1		421-54-43231	Door, L.H.	1	90216-
2		421-54-31740	• Lock Assembly	1	90216-
3		417-54-21650	Striker	1	90216-
4		417-54-21610	Spring, L.H.	1	90216-
5		01641-21016	Washer	1	90216-
6		421-54-41140	Rod	1	90216-
7		04050-13020	Pin, Cotter	1	90216-
8		01641-20608	Washer	4	90216-
9		04050-11612	Pin, Cotter	4	90216-
10		423-54-37680	Holder	1	90216-
11		421-54-43241	Door, R.H.	1	90216-
12		421-54-31740	• Lock Assembly	1	90216-
13		417-54-21650	Striker	1	90216-
14		417-54-21660	Spring, R.H.	1	90216-
15		01641-21016	Washer	1	90216-
16		421-54-41140	Rod	1	90216-
17		04050-13020	Pin, Cotter	1	90216-
18		01641-20608	Washer	4	90216-
19		04050-11612	Pin, Cotter	4	90216-
20		423-54-37680	Holder	1	90216-
21		421-54-43530	Hinge, L.H.	1	90216-
22		421-54-43540	Hinge, R.H.	1	90216-
23		01010-81225	Bolt	8	90216-
24		01643-31232	Washer	8	90216-
25		421-54-42391	Hinge	2	90216-
26		01010-81225	Bolt	8	90216-
27		01643-31232	Washer	8	90216-
28		423-54-37580	Cylinder, Gas, Gas	4	90216-
29		04205-10832	Pin	2	90216-
30		01640-20816	Washer	8	90216-
31		04050-12015	Pin, Cotter	8	90216-

FIG. M4100-020005 Hood (Door and Gas Spring)

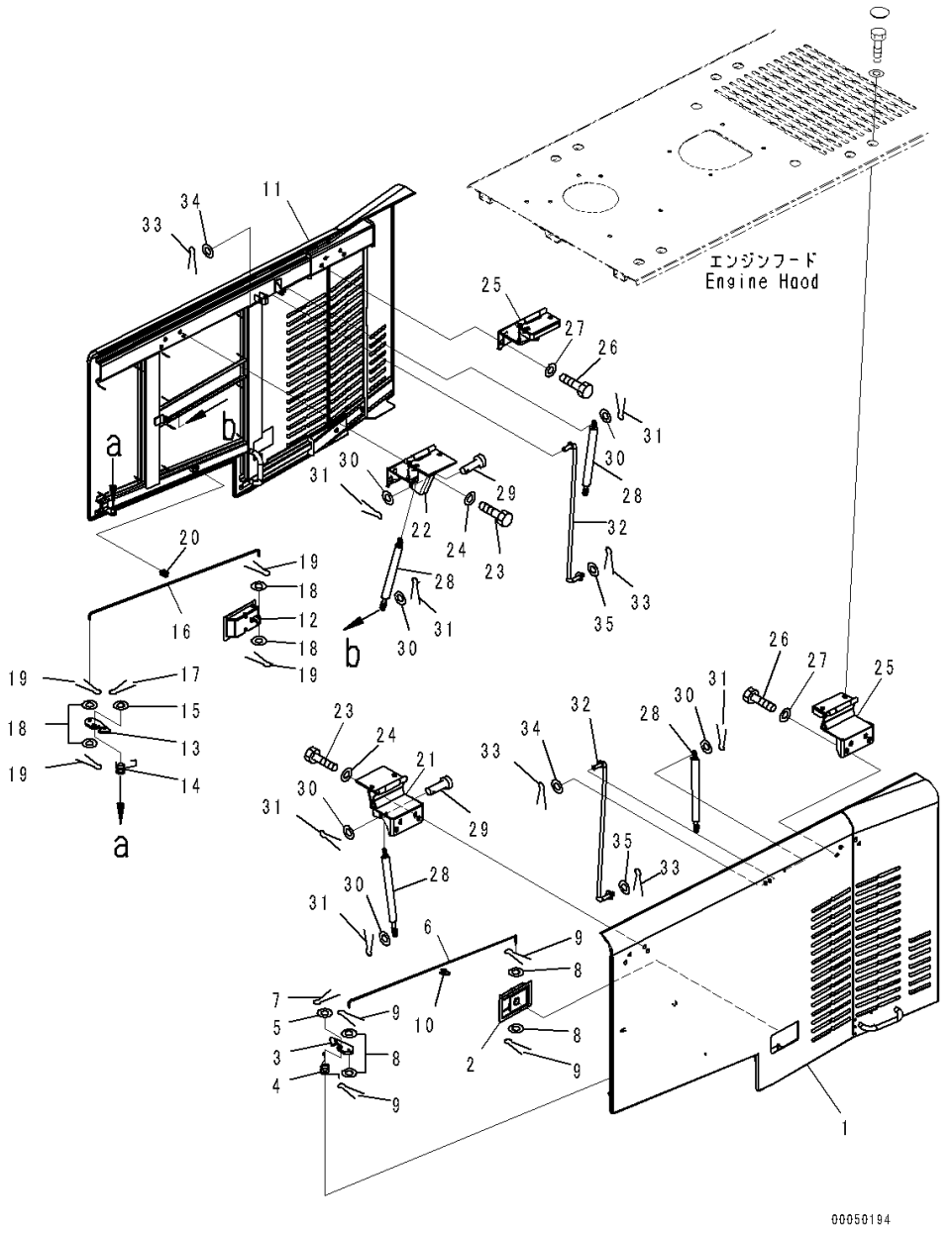

Index	Code	Part Number	Description	Qty	Serial Number
32		421-54-41470	Rod	2	90216-
33		04050-13022	Pin, Cotter	4	90216-
34		01640-21323	Washer	2	90216-
35		423-54-48490	Washer	2	90216-

FIG. M4100-020006 Hood (Sheet) (1/4)

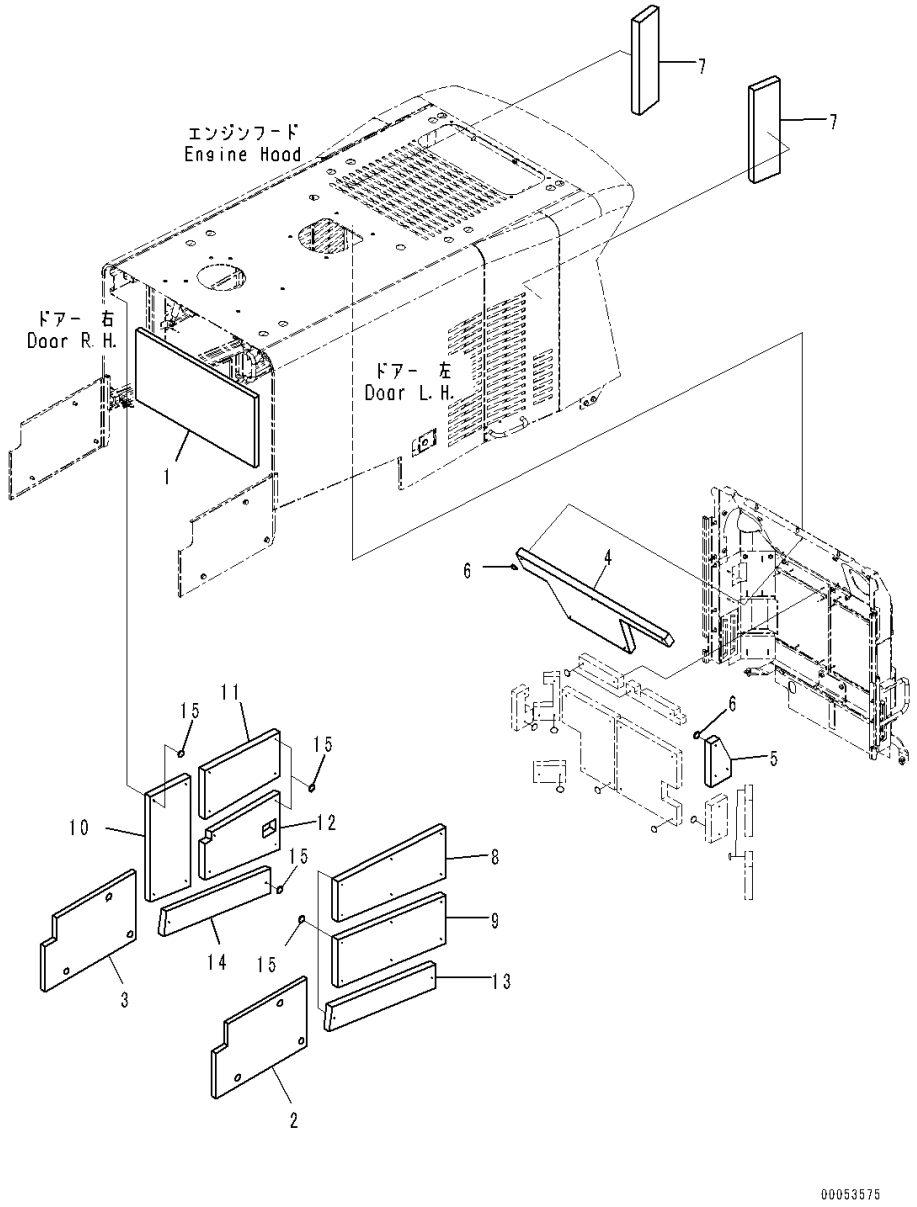

Index	Code	Part Number	Description	Qty	Serial Number
		Note: This list covers following specifications.			
		Air Intake Extension, Cap Type			
		Air Intake Extension, Cap Type, With Rear Full Fender			
		Air Intake Extension, Cap Type, For EU Safety Regulation			
		Air Intake Extension, Cap Type, With Rear Full Fender, For EU Safety Regulation			
		Air Intake Extension, Pre-cleaner Type			
		Air Intake Extension, Pre-cleaner Type, With Rear Full Fender			
		Air Intake Extension, Pre-cleaner Type, For EU Safety Regulation			
		Air Intake Extension, Pre-cleaner Type, With Rear Full Fender, For EU Safety Regulation			
		Air Intake Extension, Pre-cleaner Turbo 2 Type			
		Air Intake Extension, Pre-cleaner Turbo 2 Type, With Rear Full Fender			
		Air Intake Extension, Pre-cleaner Turbo 2 Type, For EU Safety Regulation			
		Air Intake Extension, Pre-cleaner Turbo 2 Type, With Rear Full Fender, For EU Safety Regulation			
1		421-54-41590	Sheet	1	90216-
2		421-54-41860	Sheet	1	90216-
3		421-54-41870	Sheet	1	90216-
4		421-54-41610	Sheet	1	90216-
5		421-54-41790	Sheet	1	90216-
6		124-A62-1920	Cap	8	90216-
7		421-54-41660	Sheet	2	90216-
8		421-54-41520	Sheet	1	90216-
9		421-54-41530	Sheet	1	90216-
10		421-54-41540	Sheet	1	90216-
11		421-54-41551	Sheet	1	90216-
12		421-54-41560	Sheet	1	90216-
13		421-54-41570	Sheet	1	90216-
14		421-54-41580	Sheet	1	90216-
15		124-A62-1920	Cap	28	90216-

FIG. M4100-020007 Hood (Baffle) (2/2)

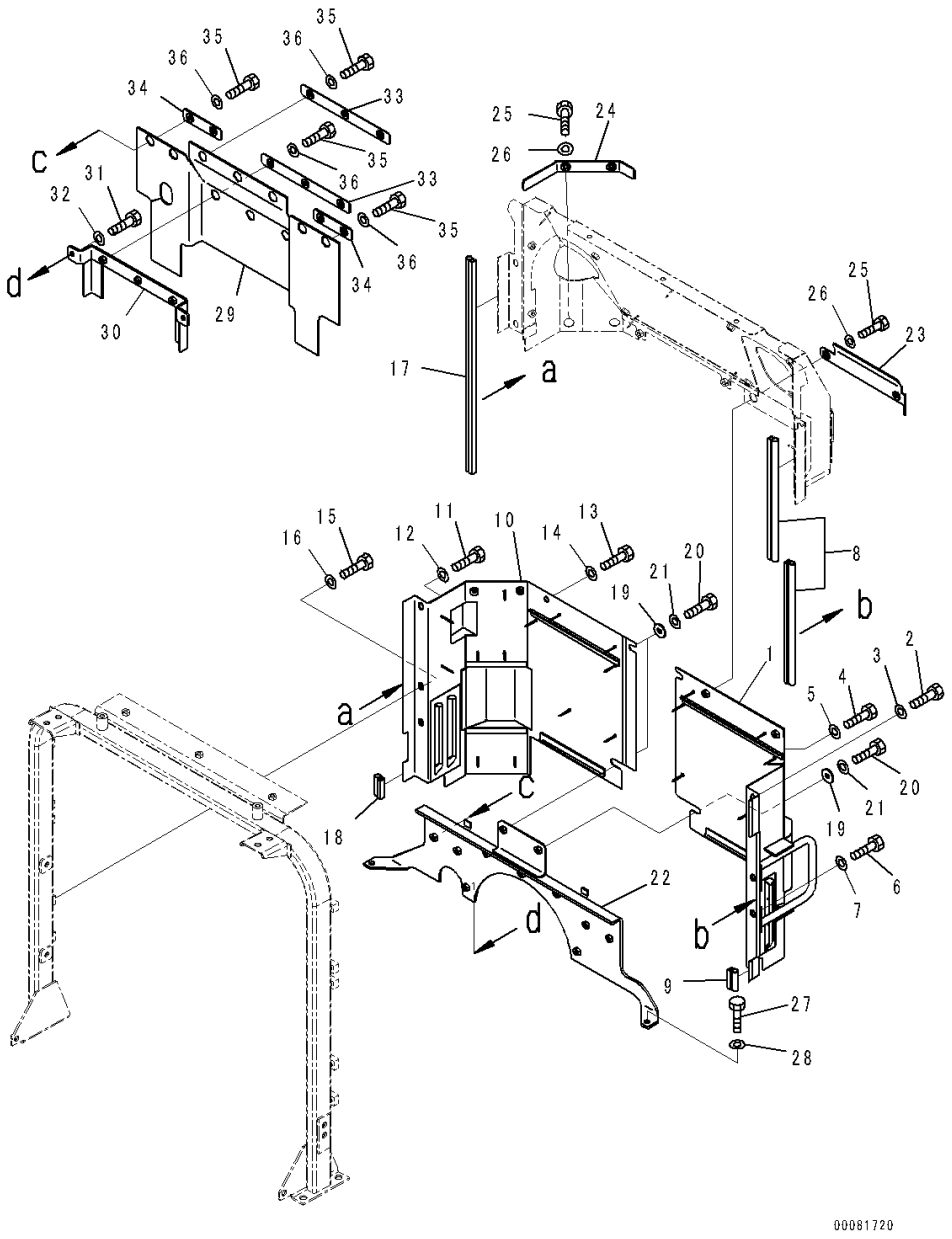

Index	Code	Part Number	Description	Qty	Serial Number
		Note: This list covers following specifications.			
		Air Intake Extension, Cap Type			
		Air Intake Extension, Cap Type, With Rear Full Fender			
		Air Intake Extension, Pre-cleaner Type			
		Air Intake Extension, Pre-cleaner Type, With Rear Full Fender			
		Air Intake Extension, Pre-cleaner Turbo 2 Type			
		Air Intake Extension, Pre-cleaner Turbo 2 Type, With Rear Full Fender			
1		421-54-43460	Cover	1	90216-
2		01010-D1016	Bolt	1	90216-
3		01643-71032	Washer	1	90216-
4		01010-D1020	Bolt	1	90216-
5		01643-71032	Washer	1	90216-
6		01010-D1220	Bolt	2	90216-
7		01643-71232	Washer	2	90216-
8		421-54-42490	Seal, Door	2	90216-
9		23S-54-27450	Seal, Door	1	90216-
10		421-54-43470	Cover	1	90216-
11		01010-D1016	Bolt	1	90216-
12		01643-71032	Washer	1	90216-
13		01010-D1020	Bolt	1	90216-
14		01643-71032	Washer	1	90216-
15		01010-D1220	Bolt	2	90216-
16		01643-71232	Washer	2	90216-
17		421-54-41320	Seal, Door	1	90216-
18		23S-54-27450	Seal, Door	1	90216-
19		424-54-14220	Washer	3	90216-
20		01010-D1030	Bolt	3	90216-
21		01643-71032	Washer	3	90216-
22		421-54-43480	Bracket	1	90216-
23		421-54-42460	Plate	1	90216-
24		421-54-42470	Plate	1	90216-
25		01010-D1020	Bolt	4	90216-
26		01643-71032	Washer	4	90216-
27		01010-D1025	Bolt	2	90216-
28		01643-71032	Washer	2	90216-
29		421-54-43780	Sheet	1	90216-
30		421-54-43380	Plate	1	90216-
31		01010-D1025	Bolt	2	90216-

FIG. M4100-020007 Hood (Baffle) (2/2)

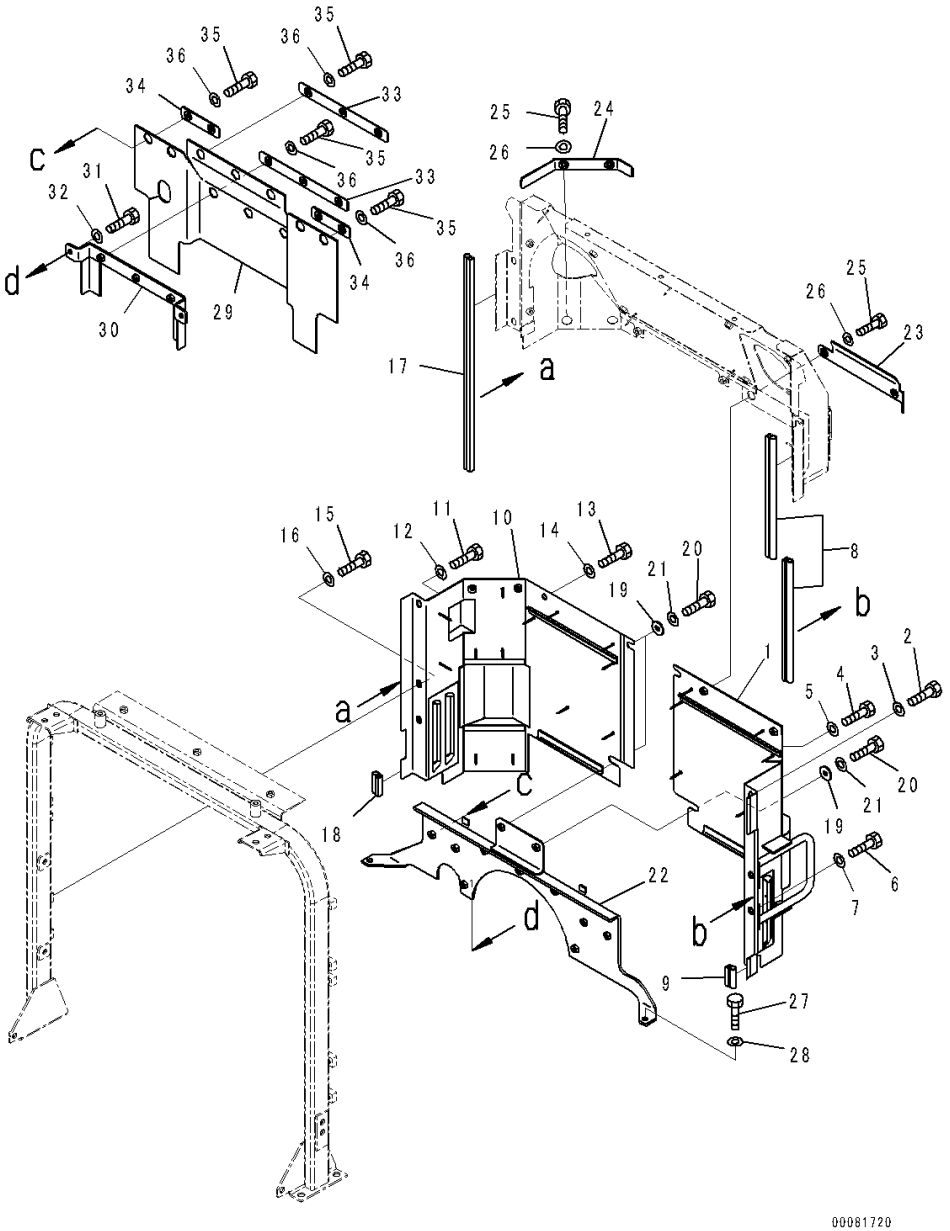

Index	Code	Part Number	Description	Qty	Serial Number
32		01643-71032	Washer	2	90216-
33		421-54-43361	Plate	2	90799-
34		421-54-43371	Plate	2	90799-
35		01010-D1025	Bolt	10	90216-
36		01643-71032	Washer	10	90216-

FIG. M4100-020008 Hood (Mounting)

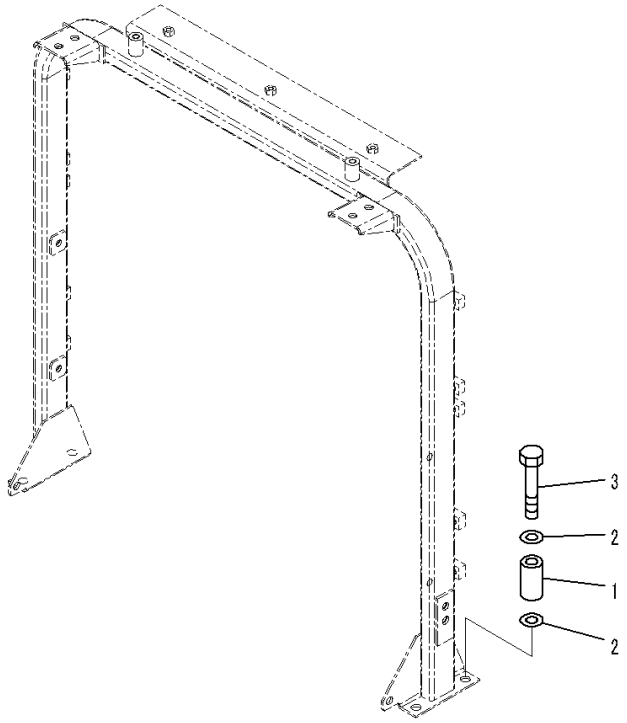

Index	Code	Part Number	Description	Qty	Serial Number
		Note: This list covers following specifications.			
		Air Intake Extension, Cap Type			
		Air Intake Extension, Cap Type, With Rear Full Fender			
		Air Intake Extension, Cap Type, For EU Safety Regulation			
		Air Intake Extension, Cap Type, With Rear Full Fender, For EU Safety Regulation			
		Air Intake Extension, Pre-cleaner Type			
		Air Intake Extension, Pre-cleaner Type, With Rear Full Fender			
		Air Intake Extension, Pre-cleaner Type, For EU Safety Regulation			
		Air Intake Extension, Pre-cleaner Type, With Rear Full Fender, For EU Safety Regulation			
		Air Intake Extension, Pre-cleaner Turbo 2 Type			
		Air Intake Extension, Pre-cleaner Turbo 2 Type, With Rear Full Fender			
		Air Intake Extension, Pre-cleaner Turbo 2 Type, For EU Safety Regulation			
		Air Intake Extension, Pre-cleaner Turbo 2 Type, With Rear Full Fender, For EU Safety Regulation			
1		421-54-33240	Spacer	4	90216-
2		01643-31445	Washer, Flat	8	90216-
3		01010-81490	Bolt	4	90216-

FIG. M4100-020009 Hood (Air Cleaner Cap)

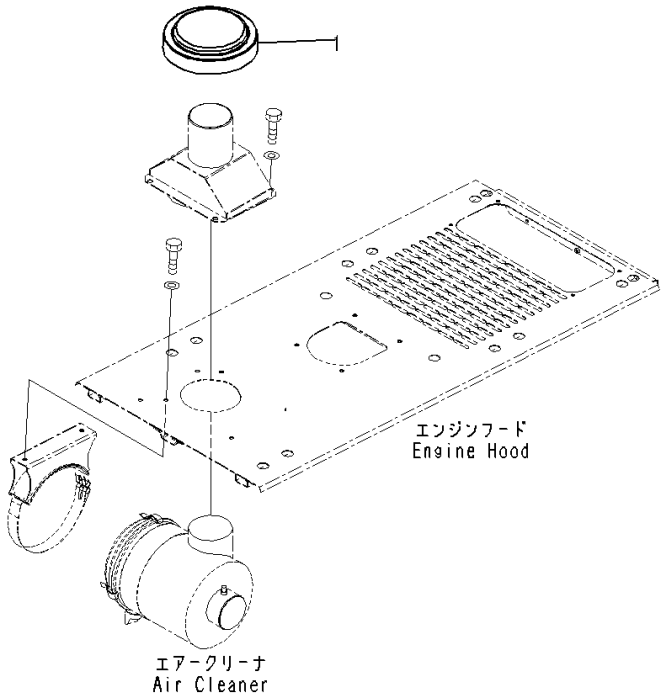

Index	Code	Part Number	Description	Qty	Serial Number
		Note: This list covers following specifications.			
		Air Intake Extension, Cap Type			
		Air Intake Extension, Cap Type, With Rear Full Fender			
		Air Intake Extension, Cap Type, For EU Safety Regulation			
		Air Intake Extension, Cap Type, With Rear Full Fender, For EU Safety Regulation			
1		566-02-42200	Cap Assembly	1	90216-

FIG. M4100-020010 Hood (Sheet) (2/4)

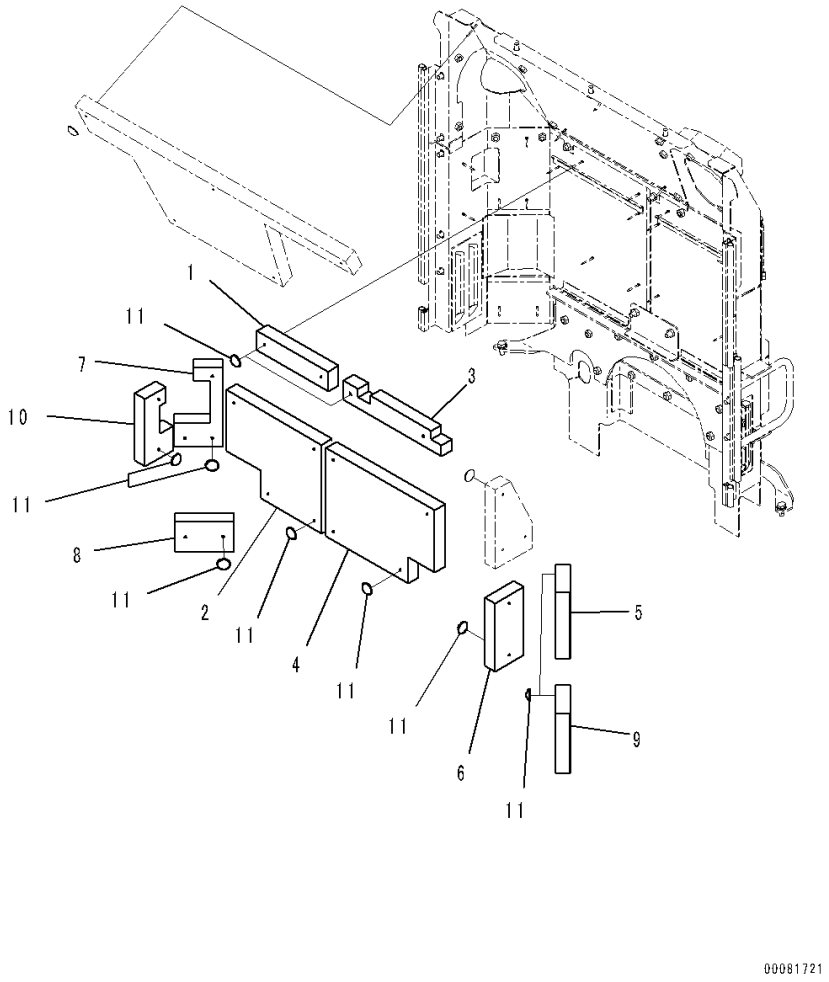

Index	Code	Part Number	Description	Qty	Serial Number
		Note: This list covers following specifications.			
		Air Intake Extension, Cap Type			
		Air Intake Extension, Cap Type, With Rear Full Fender			
		Air Intake Extension, Cap Type, For EU Safety Regulation			
		Air Intake Extension, Cap Type, With Rear Full Fender, For EU Safety Regulation			
		Air Intake Extension, Pre-cleaner Type			
		Air Intake Extension, Pre-cleaner Type, With Rear Full Fender			
		Air Intake Extension, Pre-cleaner Type, For EU Safety Regulation			
		Air Intake Extension, Pre-cleaner Type, With Rear Full Fender, For EU Safety Regulation			
		Air Intake Extension, Pre-cleaner Turbo 2 Type			
		Air Intake Extension, Pre-cleaner Turbo 2 Type, With Rear Full Fender			
		Air Intake Extension, Pre-cleaner Turbo 2 Type, For EU Safety Regulation			
		Air Intake Extension, Pre-cleaner Turbo 2 Type, With Rear Full Fender, For EU Safety Regulation			
1		421-54-41620	Sheet	1	90216-
2		421-54-45630	Sheet	1	90216-
3		421-54-42650	Sheet	1	90216-
4		421-54-45640	Sheet	1	90216-
5		421-54-41780	Sheet	1	90216-
6		421-54-42670	Sheet	1	90216-
7		421-54-41811	Sheet	1	90216-
8		421-54-41830	Sheet	1	90216-
9		421-54-41840	Sheet	1	90216-
10		421-54-42680	Sheet	1	90216-
11		124-A62-1920	Cap	29	90216-

FIG. M4100-020011 Hood (Rear Grille)

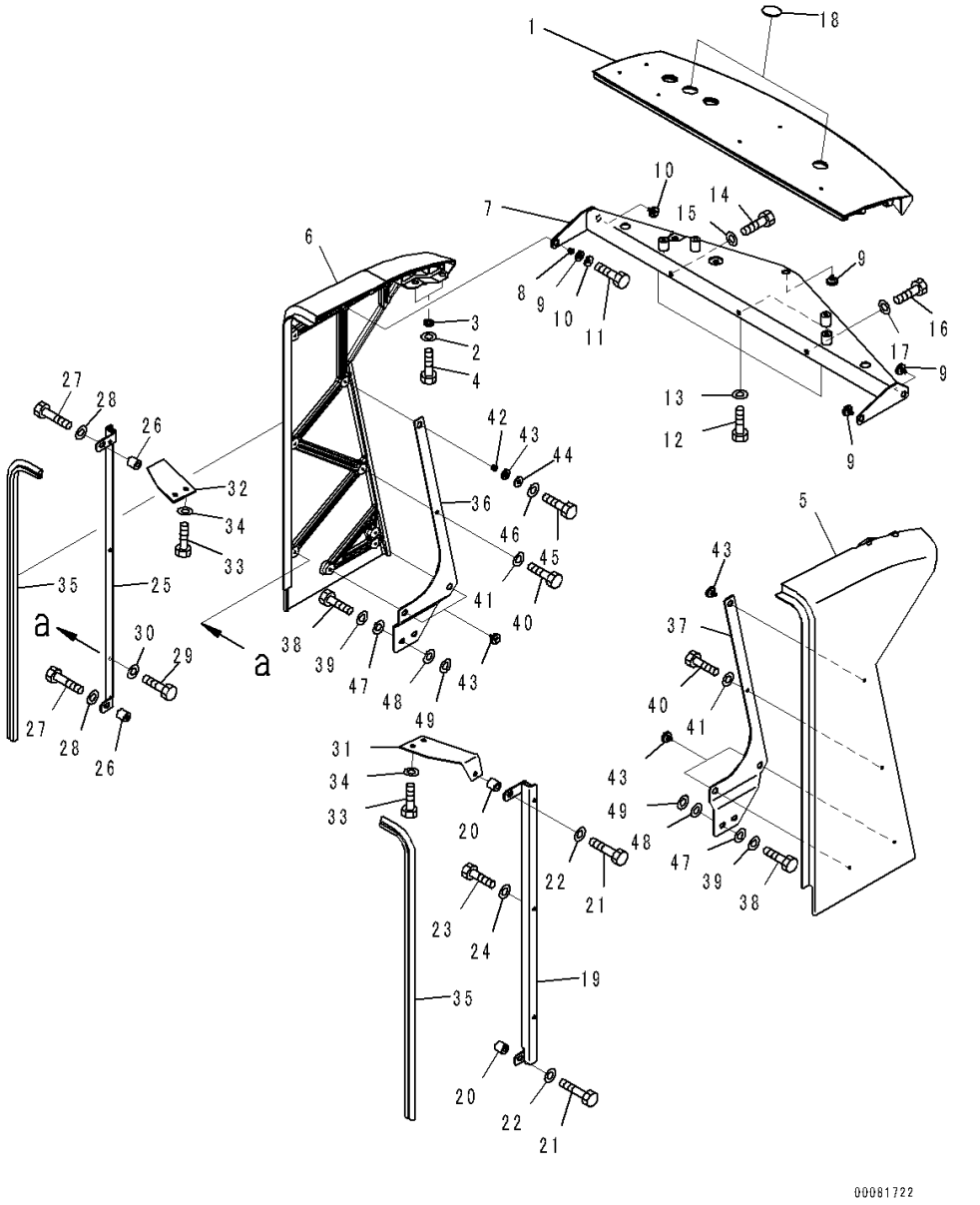

Index	Code	Part Number	Description	Qty	Serial Number
		Note: This list covers following specifications.			
		Air Intake Extension, Cap Type			
		Air Intake Extension, Cap Type, With Rear Full Fender			
		Air Intake Extension, Cap Type, For EU Safety Regulation			
		Air Intake Extension, Cap Type, With Rear Full Fender, For EU Safety Regulation			
		Air Intake Extension, Pre-cleaner Type			
		Air Intake Extension, Pre-cleaner Type, With Rear Full Fender			
		Air Intake Extension, Pre-cleaner Type, For EU Safety Regulation			
		Air Intake Extension, Pre-cleaner Type, With Rear Full Fender, For EU Safety Regulation			
		Air Intake Extension, Pre-cleaner Turbo 2 Type			
		Air Intake Extension, Pre-cleaner Turbo 2 Type, With Rear Full Fender			
		Air Intake Extension, Pre-cleaner Turbo 2 Type, For EU Safety Regulation			
		Air Intake Extension, Pre-cleaner Turbo 2 Type, With Rear Full Fender, For EU Safety Regulation			
1		421-54-41960	Grille, Top	1	90216-
2		418-54-35450	Washer	4	90216-
3		423-54-41480	Spacer	4	90216-
4		01010-80816	Bolt	4	90216-
5		421-54-41970	Grille, L.H.	1	90216-
6		421-54-41980	Grille, R.H.	1	90216-
7		421-54-42281	Bracket	1	90216-
8		421-54-43110	Collar	5	90216-
9		421-54-43120	Cushion	5	90216-
10		175-61-23220	Washer	5	90216-
11		01010-80820	Bolt	5	90216-
12		01010-80845	Bolt	3	90216-
13		01643-30823	Washer	3	90216-
14		01010-81035	Bolt	1	90216-
15		01643-31032	Washer	1	90216-
16		01010-81020	Bolt	2	90216-
17		01643-31032	Washer	2	90216-
18		195-54-42981	Cap	2	90216-
19		421-54-42330	Bracket, L.H.	1	90216-
20		195-33-11220	Spacer	2	90216-

FIG. M4100-020011 Hood (Rear Grille)

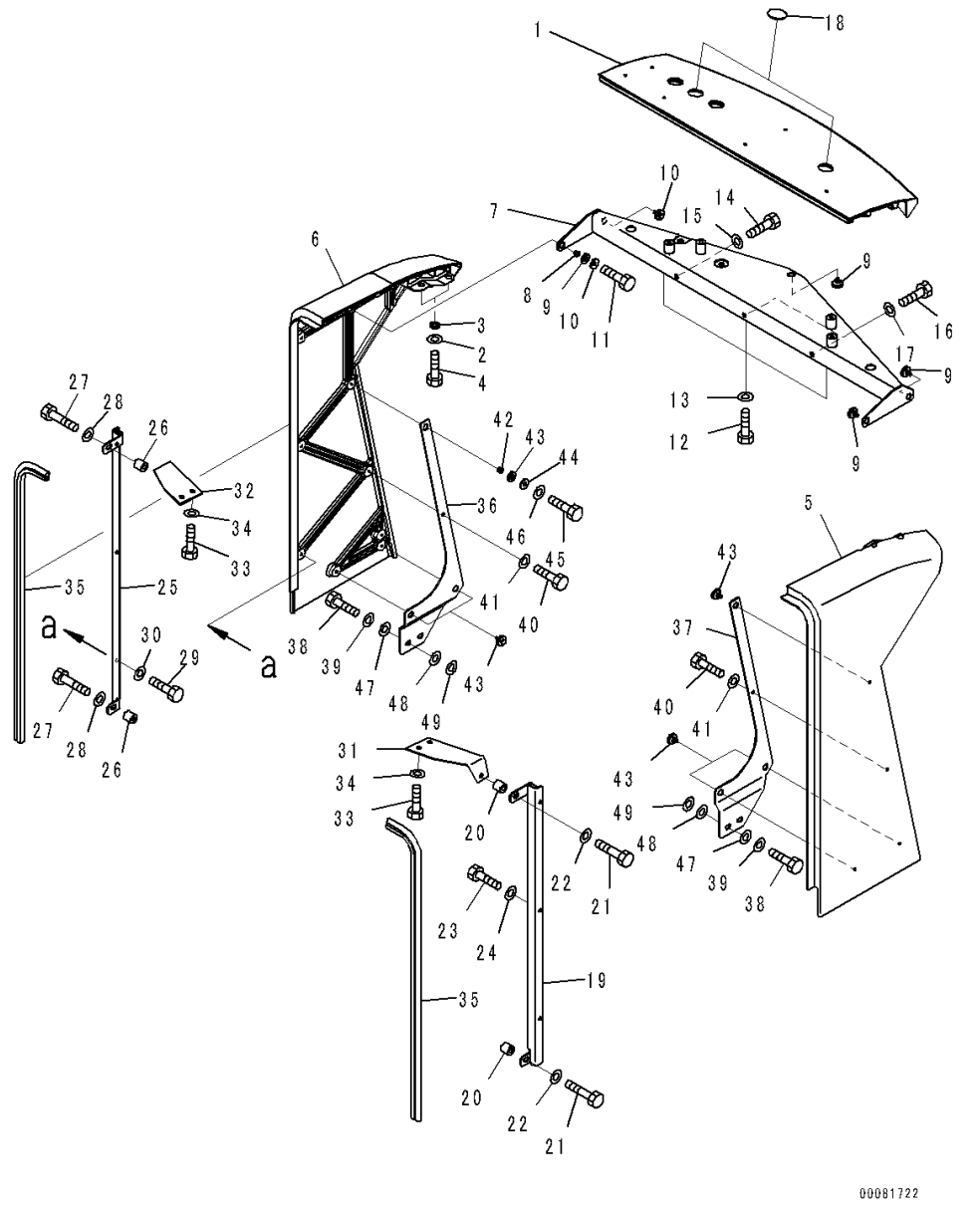

Index	Code	Part Number	Description	Qty	Serial Number
21		01010-81050	Bolt	2	90216-
22		01643-31032	Washer	2	90216-
23		01010-80816	Bolt	3	90216-
24		01643-30823	Washer	3	90216-
25		421-54-42340	Bracket, R.H.	1	90216-
26		195-33-11220	Spacer	2	90216-
27		01010-81050	Bolt	2	90216-
28		01643-31032	Washer	2	90216-
29		01010-80816	Bolt	3	90216-
30		01643-30823	Washer	3	90216-
31		421-54-42350	Bracket, L.H.	1	90216-
32		421-54-42360	Bracket, R.H.	1	90216-
33		01010-81020	Bolt	4	90216-
34		01643-31032	Washer	4	90216-
35		23S-54-27420	Seal, Door	2	90216-
36		421-54-42381	Plate, R.H.	1	90216-
37		421-54-42371	Plate, L.H.	1	90216-
38		01010-81025	Bolt	4	90216-
39		01643-31032	Washer	4	90216-
40		01010-80816	Bolt	2	90216-
41		01643-30823	Washer	2	90216-
42		421-54-43110	Collar	6	90216-
43		421-54-43120	Cushion	6	90216-
44		175-61-23220	Washer	6	90216-
45		01010-80820	Bolt	6	90216-
46		01643-30823	Washer	6	90216-
47		01643-31032	Washer	4	90216-
48		01640-21016	Washer	4	90216-
49		01643-31032	Washer	4	90216-

FIG. M4100-020012 Hood (Sheet) (3/4)

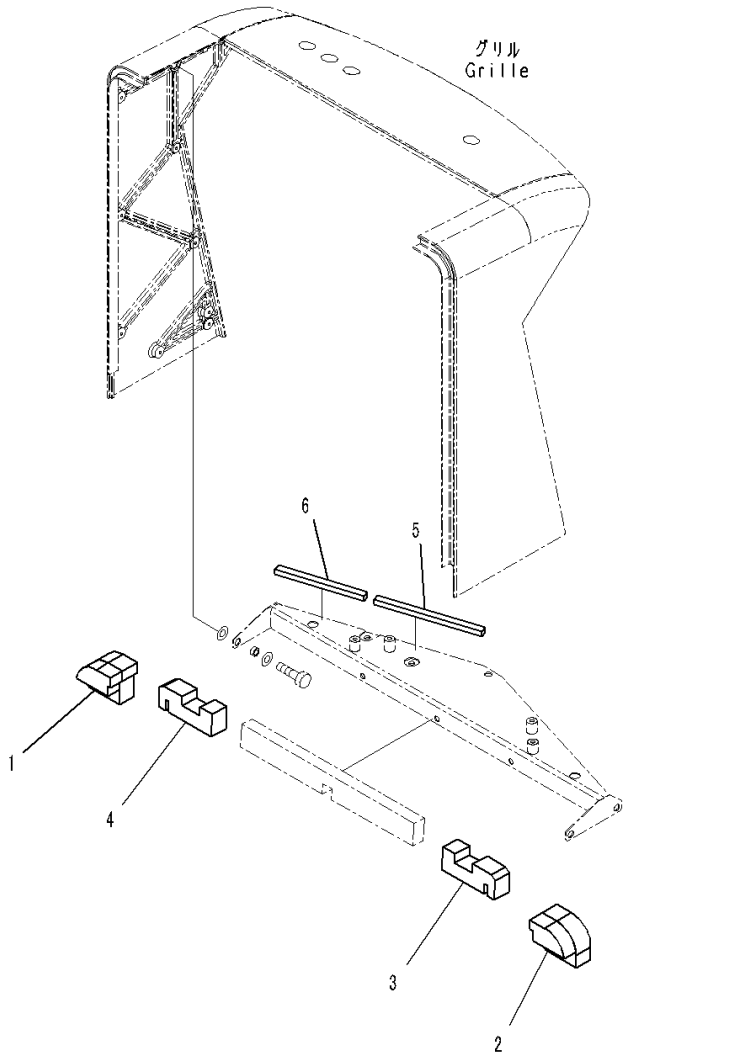

Index	Code	Part Number	Description	Qty	Serial Number
		Note: This list covers following specifications.			
		Air Intake Extension, Cap Type			
		Air Intake Extension, Cap Type, With Rear Full Fender			
		Air Intake Extension, Cap Type, For EU Safety Regulation			
		Air Intake Extension, Cap Type, With Rear Full Fender, For EU Safety Regulation			
		Air Intake Extension, Pre-cleaner Type			
		Air Intake Extension, Pre-cleaner Type, With Rear Full Fender			
		Air Intake Extension, Pre-cleaner Type, For EU Safety Regulation			
		Air Intake Extension, Pre-cleaner Type, With Rear Full Fender, For EU Safety Regulation			
		Air Intake Extension, Pre-cleaner Turbo 2 Type			
		Air Intake Extension, Pre-cleaner Turbo 2 Type, With Rear Full Fender			
		Air Intake Extension, Pre-cleaner Turbo 2 Type, For EU Safety Regulation			
		Air Intake Extension, Pre-cleaner Turbo 2 Type, With Rear Full Fender, For EU Safety Regulation			
1		421-54-42560	Sheet	1	90216-
2		421-54-42580	Sheet	1	90216-
3		421-54-42520	Sheet	1	90216-
4		421-54-42590	Sheet	1	90216-
5		421-54-43760	Seal	1	90216-
6		421-54-43770	Seal	1	90216-

FIG. M4100-020013 Hood (Sheet) (4/4)

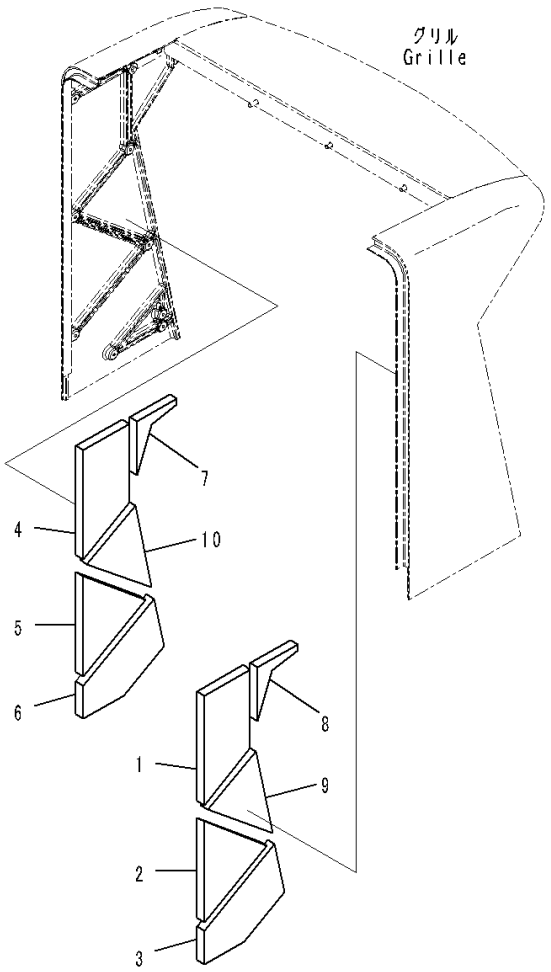

Index	Code	Part Number	Description	Qty	Serial Number
		Note: This list covers following specifications.			
		Air Intake Extension, Cap Type			
		Air Intake Extension, Cap Type, With Rear Full Fender			
		Air Intake Extension, Cap Type, For EU Safety Regulation			
		Air Intake Extension, Cap Type, With Rear Full Fender, For EU Safety Regulation			
		Air Intake Extension, Pre-cleaner Type			
		Air Intake Extension, Pre-cleaner Type, With Rear Full Fender			
		Air Intake Extension, Pre-cleaner Type, For EU Safety Regulation			
		Air Intake Extension, Pre-cleaner Type, With Rear Full Fender, For EU Safety Regulation			
		Air Intake Extension, Pre-cleaner Turbo 2 Type			
		Air Intake Extension, Pre-cleaner Turbo 2 Type, With Rear Full Fender			
		Air Intake Extension, Pre-cleaner Turbo 2 Type, For EU Safety Regulation			
		Air Intake Extension, Pre-cleaner Turbo 2 Type, With Rear Full Fender, For EU Safety Regulation			
1		421-54-41690	Sheet	1	90216-
2		421-54-41710	Sheet	1	90216-
3		421-54-41720	Sheet	1	90216-
4		421-54-41730	Sheet	1	90216-
5		421-54-41740	Sheet	1	90216-
6		421-54-41750	Sheet	1	90216-
7		421-54-41761	Sheet	1	90216-
8		421-54-41771	Sheet	1	90216-
9		421-54-41670	Sheet	1	90216-
10		421-54-41680	Sheet	1	90216-

FIG. M4100-020014 Hood (Cap)

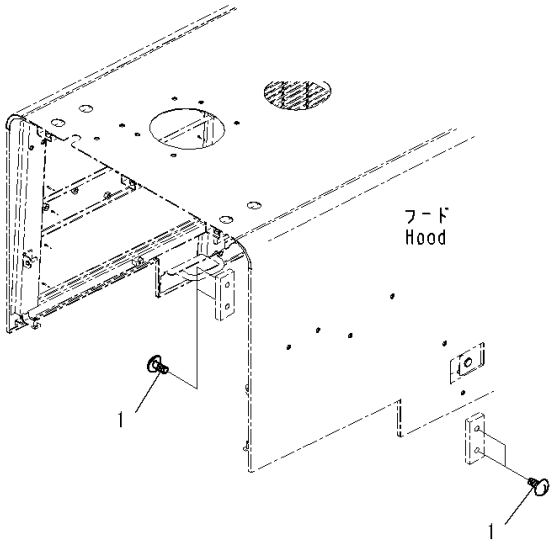

00046350

Index	Code	Part Number	Description	Qty	Serial Number
		Note: This list covers following specifications. Air Intake Extension, Cap Type Air Intake Extension, Cap Type, For EU Safety Regulation Air Intake Extension, Pre-cleaner Type Air Intake Extension, Pre-cleaner Type, For EU Safety Regulation Air Intake Extension, Pre-cleaner Turbo 2 Type Air Intake Extension, Pre-cleaner Turbo 2 Type, For EU Safety Regulation			
1		22L-46-12150	Cap	4	90216-

FIG. M4100-022001 Hood (Hood and Frame)

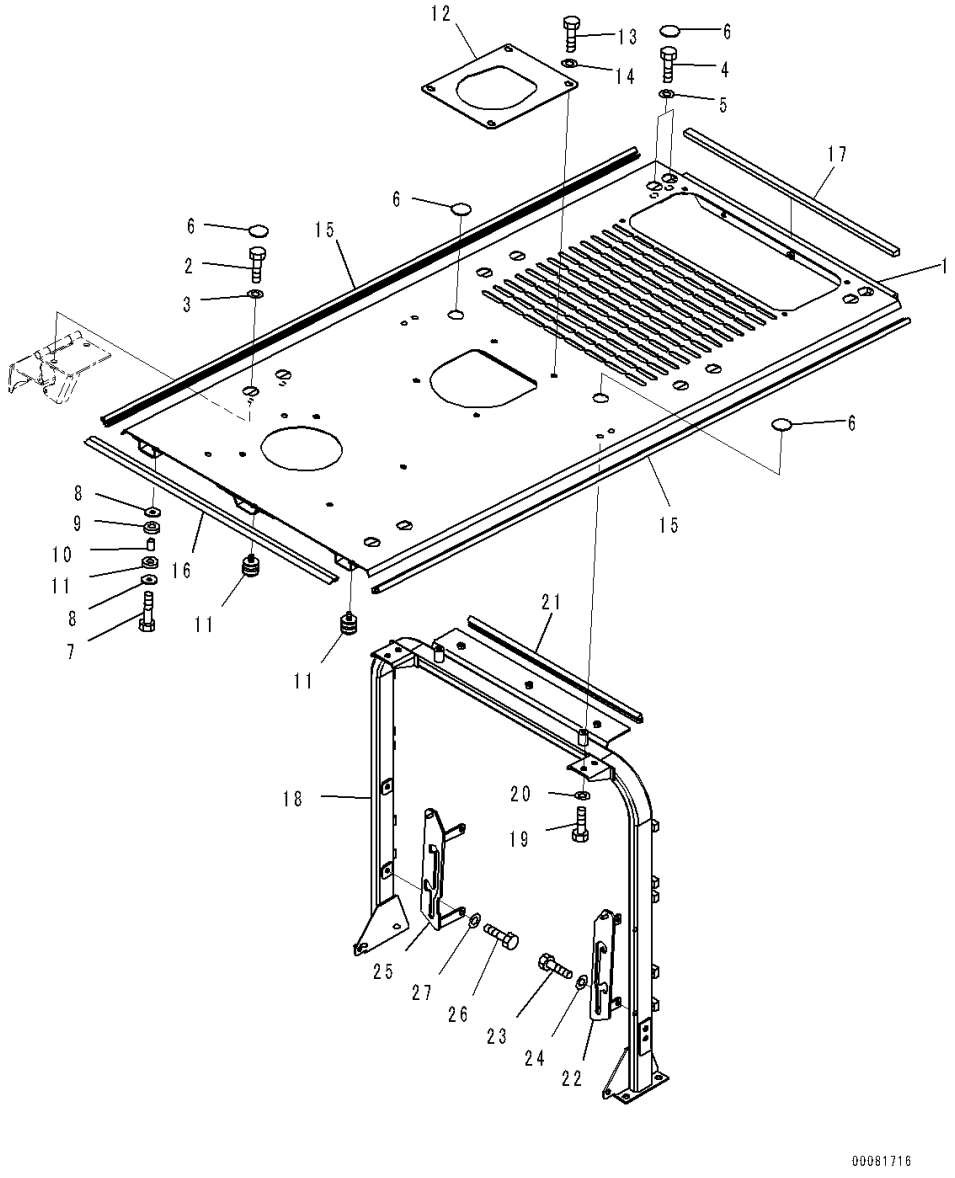

Index	Code	Part Number	Description	Qty	Serial Number
		Note: This list covers following specifications.			
		Air Intake Extension, Cap Type, With Rear Full Fender			
		Air Intake Extension, Cap Type, With Rear Full Fender, For EU Safety Regulation			
		Air Intake Extension, Pre-cleaner Type, With Rear Full Fender			
		Air Intake Extension, Pre-cleaner Type, With Rear Full Fender, For EU Safety Regulation			
		Air Intake Extension, Pre-cleaner Turbo 2 Type, With Rear Full Fender			
		Air Intake Extension, Pre-cleaner Turbo 2 Type, With Rear Full Fender, For EU Safety Regulation			
1		421-54-41112	Hood	1	90216-
2		01010-81225	Bolt	8	90216-
3		01643-31232	Washer	8	90216-
4		01010-81230	Bolt	4	90216-
5		01643-31232	Washer	4	90216-
6		195-54-42981	Cap	14	90216-
7		01010-81250	Bolt	3	90216-
8		419-43-17920	Washer	6	90216-
9		419-43-17930	Cushion	3	90216-
10		417-62-14130	Spacer	3	90216-
11		417-62-13620	Cushion	3	90216-
12		421-54-42690	Cover	1	90216-
13		01010-81225	Bolt	4	90216-
14		01643-31232	Washer	4	90216-
15		417-54-21390	Seal	2	90216-
16		421-54-48180	Seal	1	90216-
17		421-54-43580	Seal	1	90216-
18		421-54-41121	Frame	1	90216-
19		01010-81225	Bolt	4	90216-
20		01643-31232	Washer	4	90216-
21		421-54-41320	Seal, Door	1	90216-
22		421-54-41451	Guide, L.H.	1	90216-
23		01010-81025	Bolt	2	90216-
24		01643-31032	Washer	2	90216-
25		421-54-41461	Guide, R.H.	1	90216-
26		01010-81025	Bolt	2	90216-
27		01643-31032	Washer	2	90216-

FIG. M4100-022005 Hood (Door and Gas Spring)

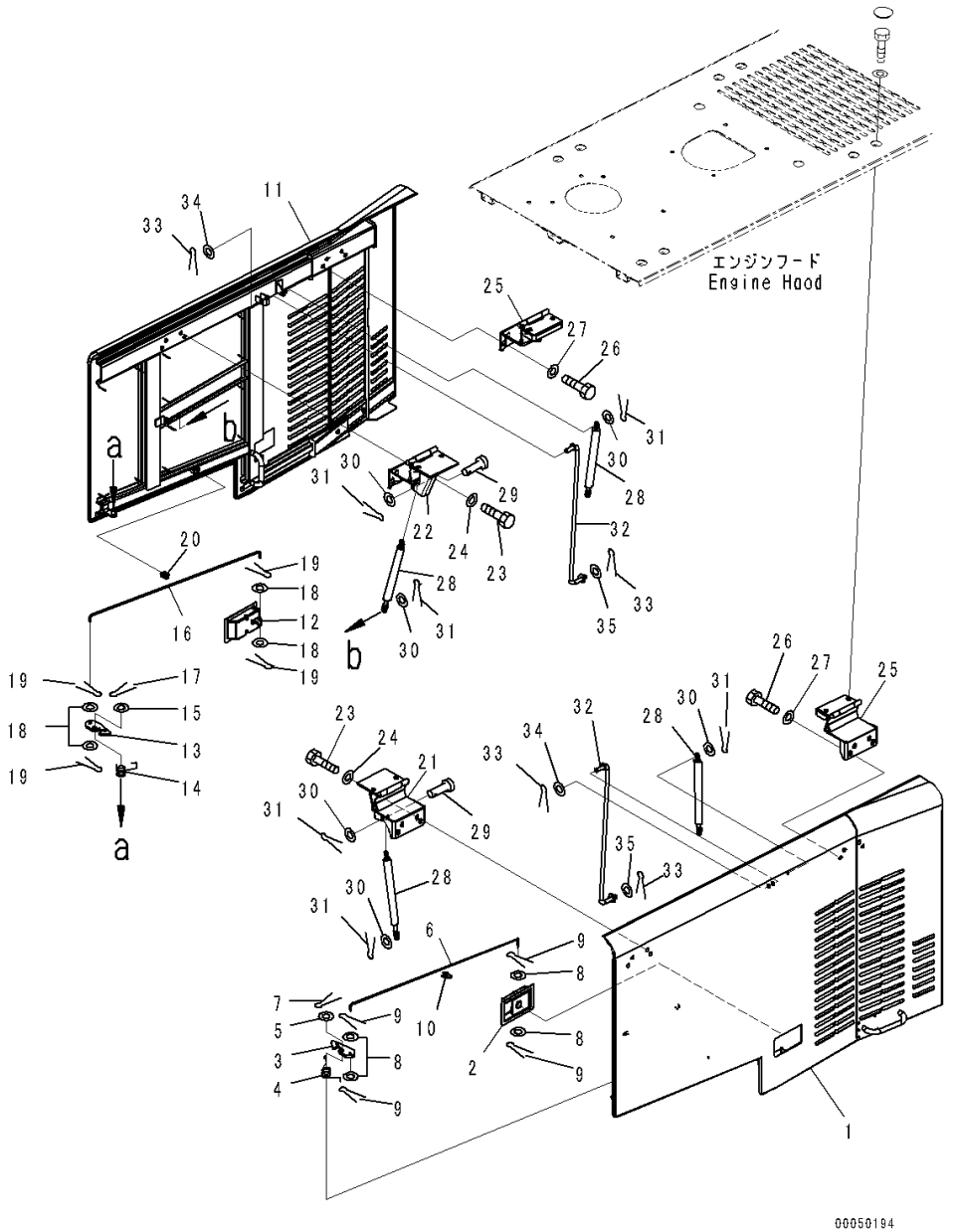

Index	Code	Part Number	Description	Qty	Serial Number
		Note: This list covers following specifications.			
		Air Intake Extension, Cap Type, With Rear Full Fender			
		Air Intake Extension, Cap Type, With Rear Full Fender, For EU Safety Regulation			
		Air Intake Extension, Pre-cleaner Type, With Rear Full Fender			
		Air Intake Extension, Pre-cleaner Type, With Rear Full Fender, For EU Safety Regulation			
		Air Intake Extension, Pre-cleaner Turbo 2 Type, With Rear Full Fender			
		Air Intake Extension, Pre-cleaner Turbo 2 Type, With Rear Full Fender, For EU Safety Regulation			
1		421-54-41172	Door, L.H.	1	90216-
2		421-54-31740	• Lock Assembly	1	90216-
3		417-54-21650	Striker	1	90216-
4		417-54-21610	Spring, L.H.	1	90216-
5		01641-21016	Washer	1	90216-
6		421-54-41140	Rod	1	90216-
7		04050-13020	Pin, Cotter	1	90216-
8		01641-20608	Washer	4	90216-
9		04050-11612	Pin, Cotter	4	90216-
10		423-54-37680	Holder	1	90216-
11		421-54-41182	Door, R.H.	1	90216-
12		421-54-31740	• Lock Assembly	1	90216-
13		417-54-21650	Striker	1	90216-
14		417-54-21660	Spring, R.H.	1	90216-
15		01641-21016	Washer	1	90216-
16		421-54-41140	Rod	1	90216-
17		04050-13020	Pin, Cotter	1	90216-
18		01641-20608	Washer	4	90216-
19		04050-11612	Pin, Cotter	4	90216-
20		423-54-37680	Holder	1	90216-
21		421-54-41191	Hinge, L.H.	1	90216-
22		421-54-42441	Hinge, R.H.	1	90216-
23		01010-81225	Bolt	8	90216-
24		01643-31232	Washer	8	90216-
25		421-54-42391	Hinge	2	90216-
26		01010-81225	Bolt	8	90216-
27		01643-31232	Washer	8	90216-
28		421-54-44770	Cylinder, Gas	4	90216-

FIG. M4100-022005 Hood (Door and Gas Spring)

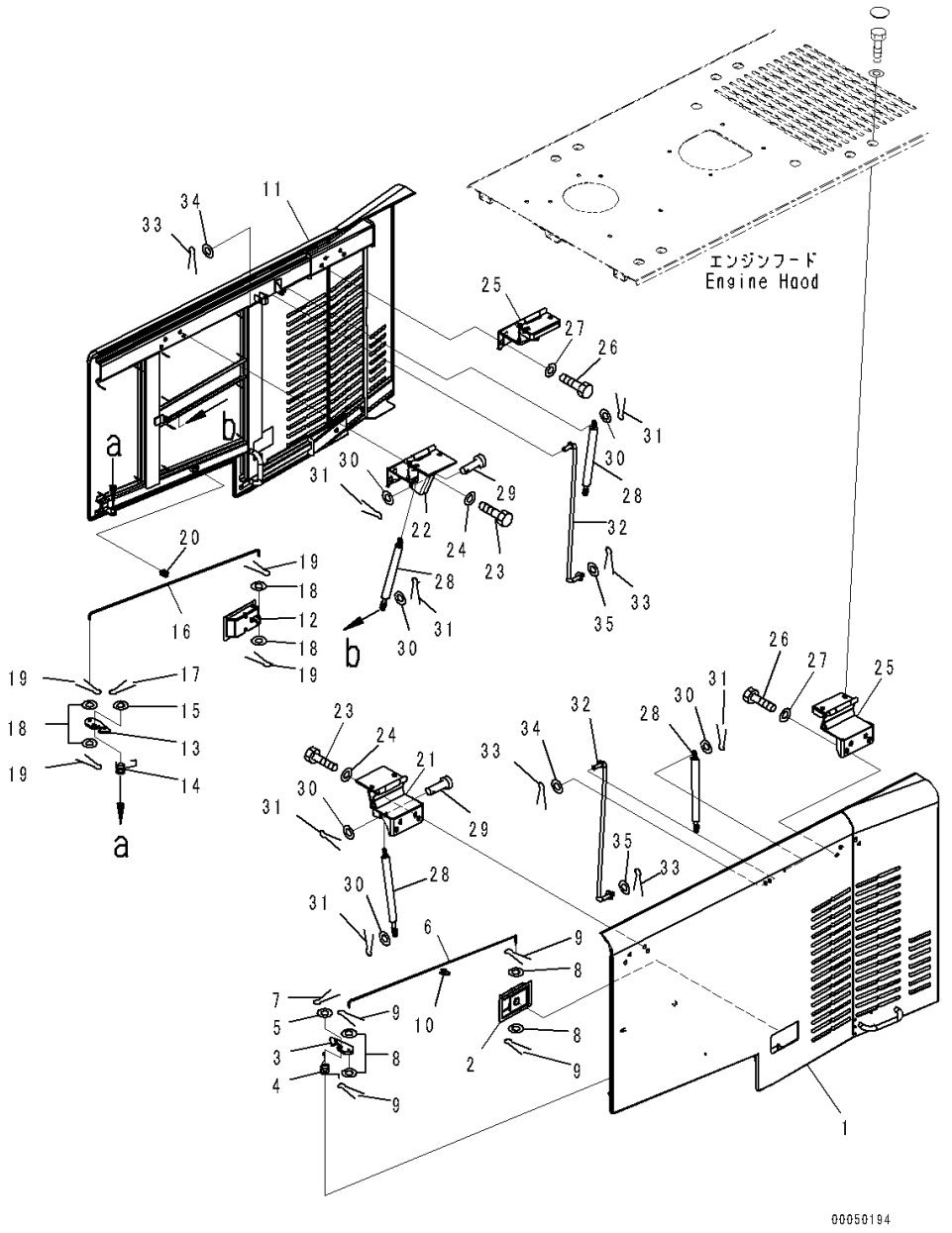

Index	Code	Part Number	Description	Qty	Serial Number
29		04205-11035	Pin	2	90216-
30		01640-21016	Washer	8	90216-
31		04050-13020	Pin, Cotter	8	90216-
32		421-54-41470	Rod	2	90216-
33		04050-13022	Pin, Cotter	4	90216-
34		01640-21323	Washer	2	90216-
35		423-54-48490	Washer	2	90216-

FIG. M4100-033004 Hood (Baffle) (1/2)

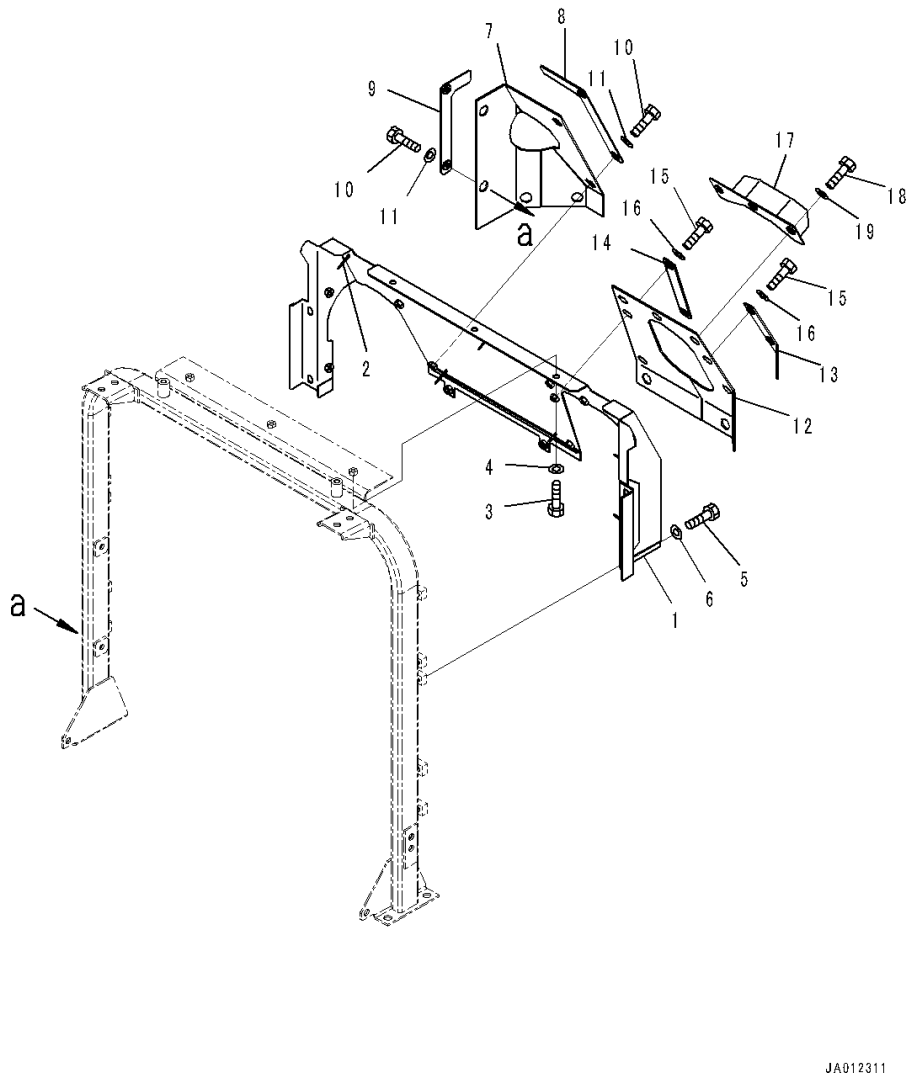

Index	Code	Part Number	Description	Qty	Serial Number
		Note: This list covers following specifications.			
		Air Intake Extension, Cap Type, For EU Safety Regulation			
		Air Intake Extension, Cap Type, With Rear Full Fender, For EU Safety Regulation			
		Air Intake Extension, Pre-cleaner Type, For EU Safety Regulation			
		Air Intake Extension, Pre-cleaner Type, With Rear Full Fender, For EU Safety Regulation			
		Air Intake Extension, Pre-cleaner Turbo 2 Type, For EU Safety Regulation			
		Air Intake Extension, Pre-cleaner Turbo 2 Type, With Rear Full Fender, For EU Safety Regulation			
1		421-54-45590	Cover	1	90216-
2		421-54-42480	• Stud, Welded	8	90216-
3		01010-D1020	Bolt	3	90216-
4		01643-71032	Washer	3	90216-
5		01010-D1016	Bolt	4	90216-
6		01643-71032	Washer	4	90216-
7		421-54-41930	Sheet	1	90216-
8		421-54-41940	Plate	1	90216-
9		421-54-42210	Plate	1	90216-
10		01010-D1020	Bolt	4	90216-
11		01643-71032	Washer	4	90216-
12		421-54-43420	Sheet	1	90216-
13		421-54-43450	Plate	1	90216-
14		421-54-43440	Plate	1	90216-
15		01010-D1020	Bolt	4	90216-
16		01643-71032	Washer	4	90216-
17		421-54-43730	Plate	1	90216-
18		01010-D1020	Bolt	3	90216-
19		01643-71032	Washer	3	90216-

FIG. M4100-033007 Hood (Baffle) (2/2)

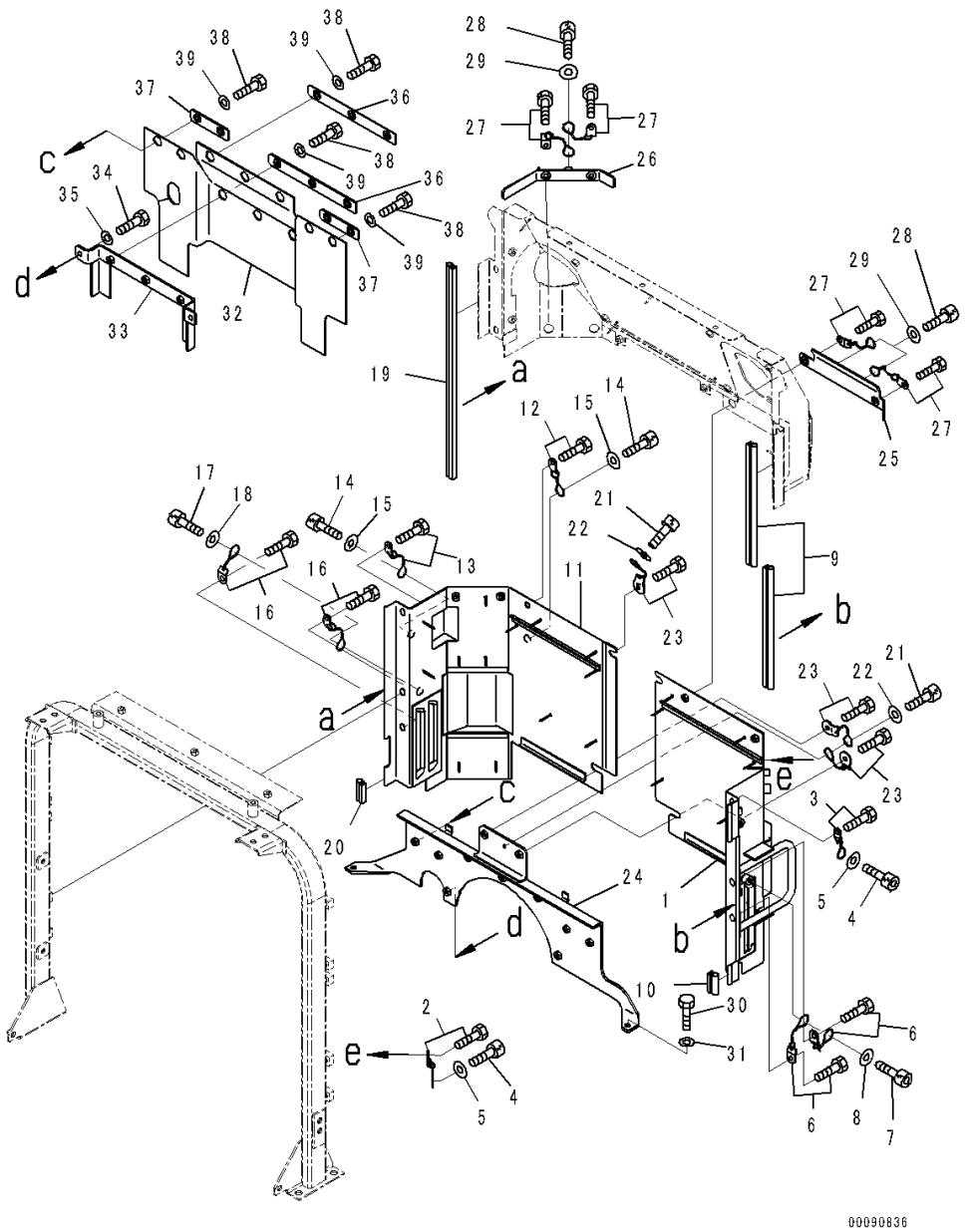

Index	Code	Part Number	Description	Qty	Serial Number
		Note: This list covers following specifications.			
		Air Intake Extension, Cap Type, For EU Safety Regulation			
		Air Intake Extension, Cap Type, With Rear Full Fender, For EU Safety Regulation			
		Air Intake Extension, Pre-cleaner Type, For EU Safety Regulation			
		Air Intake Extension, Pre-cleaner Type, With Rear Full Fender, For EU Safety Regulation			
		Air Intake Extension, Pre-cleaner Turbo 2 Type, For EU Safety Regulation			
		Air Intake Extension, Pre-cleaner Turbo 2 Type, With Rear Full Fender, For EU Safety Regulation			
1		421-54-45540	Cover	1	90216-
2		421-54-45380	Bolt Assembly	1	90216-
3		421-54-45380	Bolt Assembly	1	90216-
4		01252-A1016	Bolt, Hexagon Socket Head	2	90216-
5		417-43-16210	Washer	2	90216-
6		8240-54-5450	Bolt Assembly	2	90216-
7		01252-A1016	Bolt, Hexagon Socket Head	1	90216-
8		417-43-16210	Washer	1	90216-
9		421-54-42490	Seal, Door	2	90216-
10		23S-54-27450	Seal, Door	1	90216-
11		421-54-45550	Cover	1	90216-
12		421-54-45380	Bolt Assembly	1	90216-
13		421-54-45380	Bolt Assembly	1	90216-
14		01252-A1016	Bolt, Hexagon Socket Head	2	90216-
15		417-43-16210	Washer	2	90216-
16		8240-54-5450	Bolt Assembly	2	90216-
17		01252-A1016	Bolt, Hexagon Socket Head	1	90216-
18		417-43-16210	Washer	1	90216-
19		421-54-41320	Seal, Door	1	90216-
20		23S-54-27450	Seal, Door	1	90216-
21		01252-A1016	Bolt, Hexagon Socket Head	2	90216-
22		417-43-16210	Washer	2	90216-
23		421-54-45390	Bolt Assembly	3	90216-
24		421-54-45560	Bracket	1	90216-
25		421-54-45570	Plate	1	90216-
26		421-54-45580	Plate	1	90216-
27		421-54-45380	Bolt Assembly	4	90216-
28		01252-A1016	Bolt, Hexagon Socket Head	3	90216-

FIG. M4100-033007 Hood (Baffle) (2/2)

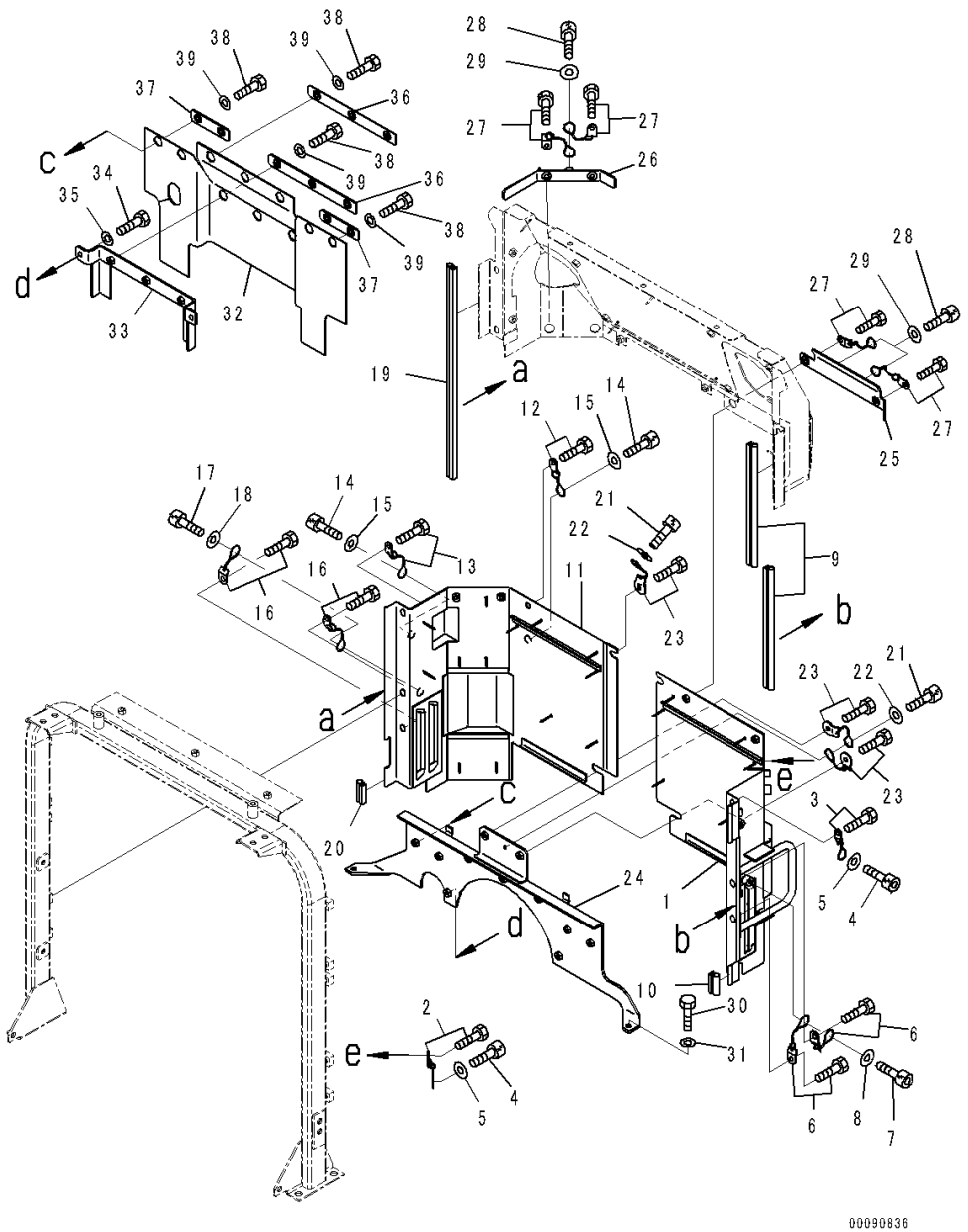

Index	Code	Part Number	Description	Qty	Serial Number
29		417-43-16210	Washer	3	90216-
30		01010-D1025	Bolt	2	90216-
31		01643-71032	Washer	2	90216-
32		421-54-43780	Sheet	1	90216-
33		421-54-43380	Plate	1	90216-
34		01010-D1025	Bolt	2	90216-
35		01643-71032	Washer	2	90216-
36		421-54-43361	Plate	2	90799-
37		421-54-43371	Plate	2	90799-
38		01010-D1025	Bolt	10	90216-
39		01643-71032	Washer	10	90216-

FIG. M4100-025003 Hood (Air Cleaner Cover)

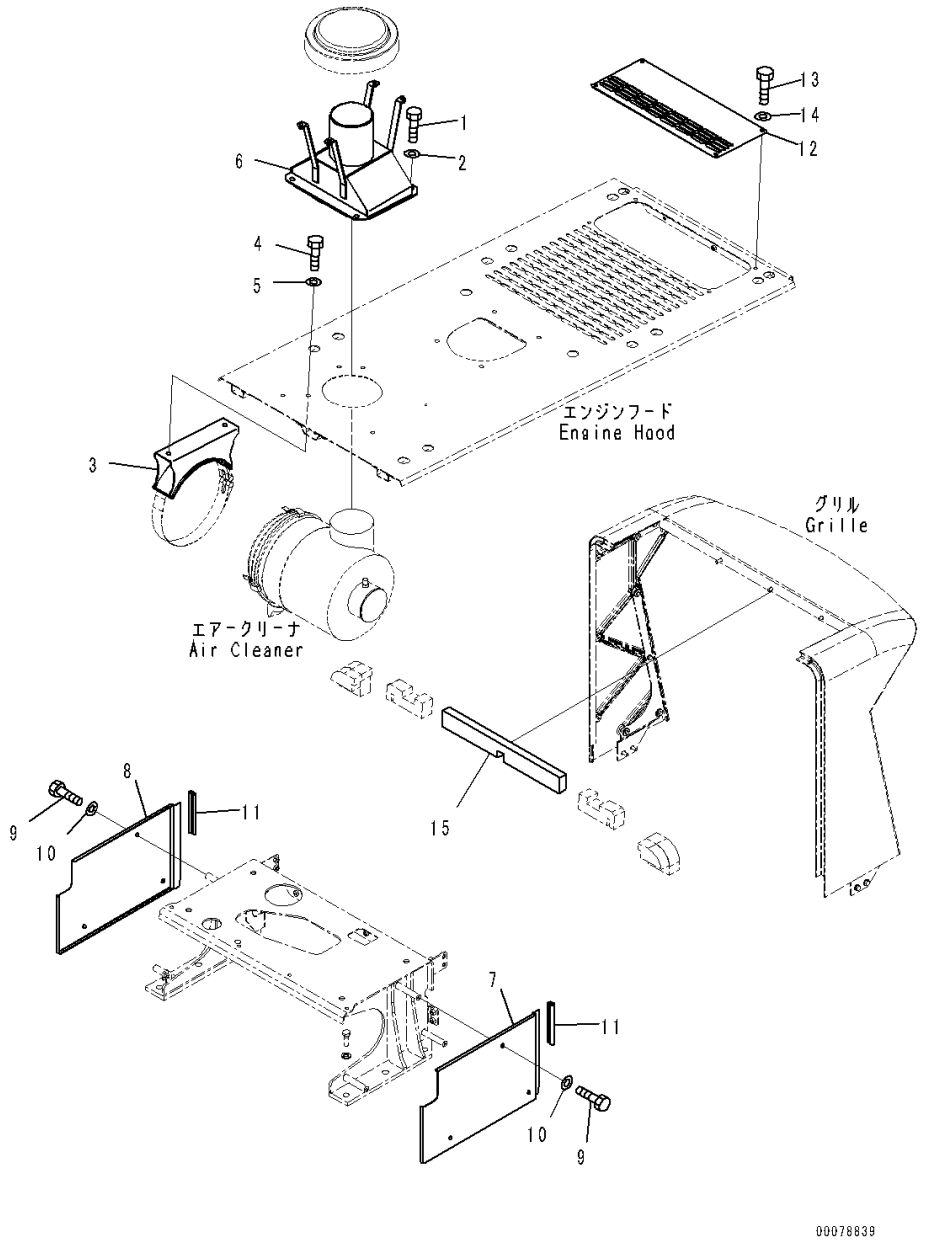

Index	Code	Part Number	Description	Qty	Serial Number
		Note: This list covers following specifications.			
		Air Intake Extension, Pre-cleaner Type			
		Air Intake Extension, Pre-cleaner Type, With Rear Full Fender			
		Air Intake Extension, Pre-cleaner Type, For EU Safety Regulation			
		Air Intake Extension, Pre-cleaner Type, With Rear Full Fender, For EU Safety Regulation			
1		01010-81225	Bolt	4	90216-
2		01643-31232	Washer	4	90216-
3		421-54-41350	Bracket	1	90216-
4		01010-81225	Bolt	2	90216-
5		01643-31232	Washer	2	90216-
6		421-54-43810	Bracket	1	90216-
7		421-54-41910	Cover, L.H.	1	90216-
8		421-54-41920	Cover, R.H.	1	90216-
9		01010-81020	Bolt	6	90216-
10		01643-31032	Washer	6	90216-
11		416-54-21540	Seal	2	90216-
12		421-54-41880	Plate	1	90216-
13		01010-81020	Bolt	4	90216-
14		01643-31032	Washer	4	90216-
15		421-54-42510	Sheet	1	90216-

FIG. M4100-025009A Hood (Pre-Cleaner)

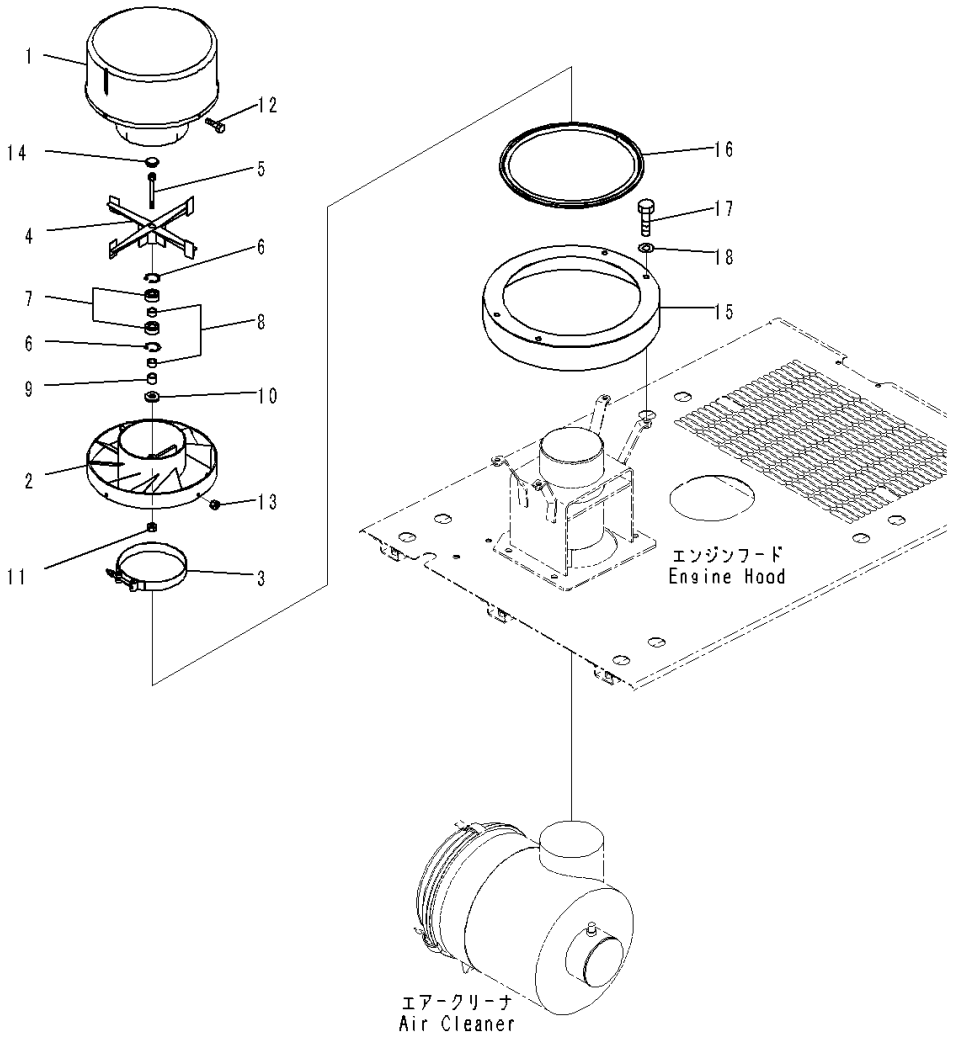

Index	Code	Part Number	Description	Qty	Serial Number
		Note: This list covers following specifications.			
		Air Intake Extension, Pre-cleaner Type			
		Air Intake Extension, Pre-cleaner Type, With Rear Full Fender			
		Air Intake Extension, Pre-cleaner Type, For EU Safety Regulation			
		Air Intake Extension, Pre-cleaner Type, With Rear Full Fender, For EU Safety Regulation			
		421-U12-3101	Pre-cleaner	1	90561-
1		421-U12-3120	• Hood	1	90216-
2		421-U12-3330	• Body	1	90561-
3		421-U12-3140	• Clamp	1	90216-
4		421-U12-3150	• Rotor	1	90216-
5		421-U12-3160	• Bolt	1	90216-
6		421-U12-3170	• Ring, Snap	2	90216-
7		421-U12-3181	• Bearing, Ball	2	90561-
8		421-U12-3190	• Bushing	2	90216-
9		418-U12-3410	• Bushing	1	90561-
10		418-U12-3420	• Shield	1	90561-
11		421-U12-3230	• Nut	1	90216-
12		421-U12-3240	• Bolt	4	90216-
13		421-U12-3250	• Nut	4	90216-
14		421-U12-3260	• Plug, Plastic	1	90216-
15		424-U12-4120	Cover	1	90216-
16		424-U12-4130	Seal	1	90216-
17		01010-81020	Bolt	4	90216-
18		01643-31032	Washer	4	90216-

FIG. M4100-027009 Hood (Pre-Cleaner)

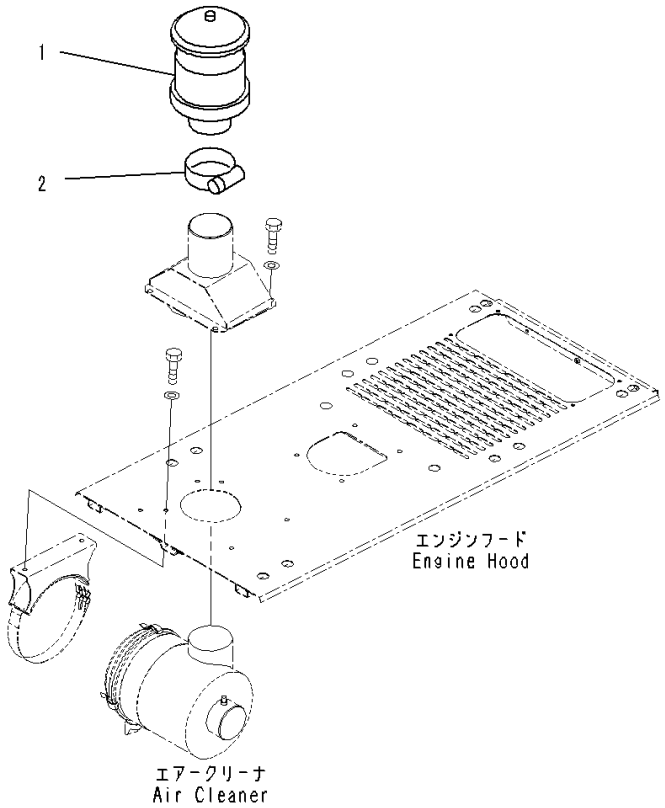

Index	Code	Part Number	Description	Qty	Serial Number
		Note: This list covers following specifications.			
		Air Intake Extension, Pre-cleaner Turbo 2 Type			
		Air Intake Extension, Pre-cleaner Turbo 2 Type, With Rear Full Fender			
		Air Intake Extension, Pre-cleaner Turbo 2 Type, For EU Safety Regulation			
		Air Intake Extension, Pre-cleaner Turbo 2 Type, With Rear Full Fender, For EU Safety Regulation			
1		421-01-H2150	Pre-cleaner	1	90216-
2		07289-00160	Clamp, Hose	1	90216-

FIG. M4103-001001 Fire Proof Net

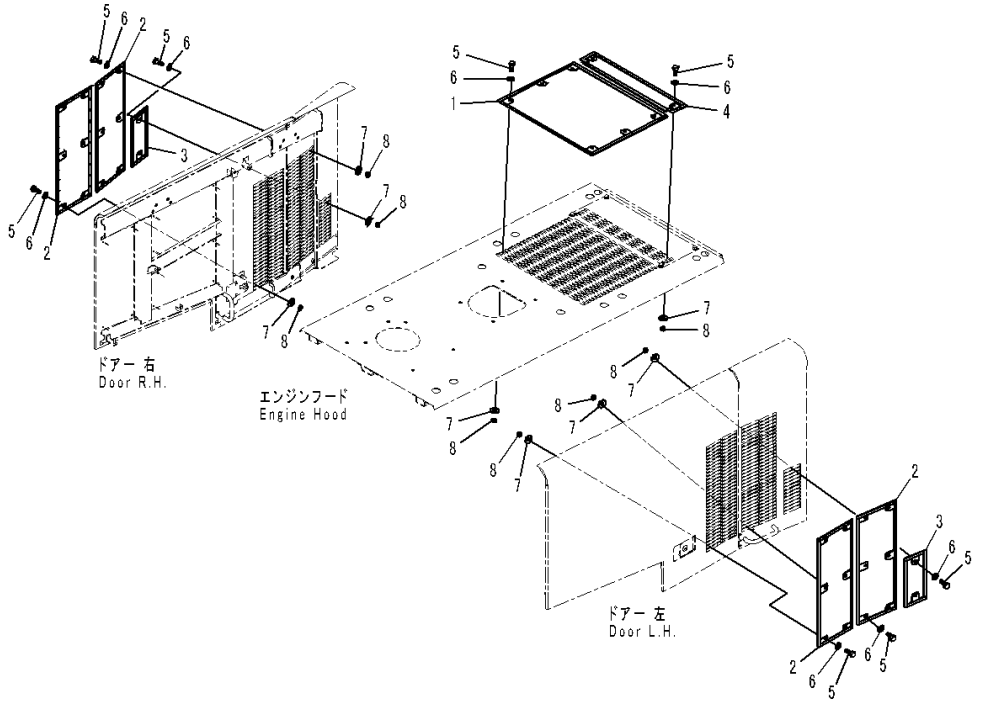

Index	Code	Part Number	Description	Qty	Serial Number
1		421-54-48110	Net	1	90216-
2		421-54-48120	Net	4	90216-
3		421-54-48130	Net	2	90216-
4		421-54-48140	Net	1	90216-
5		01010-81025	Bolt	36	90216-
6		01643-31032	Washer	36	90216-
7		130-43-64260	Collar	36	90216-
8		01580-11008	Nut	36	90216-

FIG. M4200-001001 Rear Fender (Fender and Bracket)

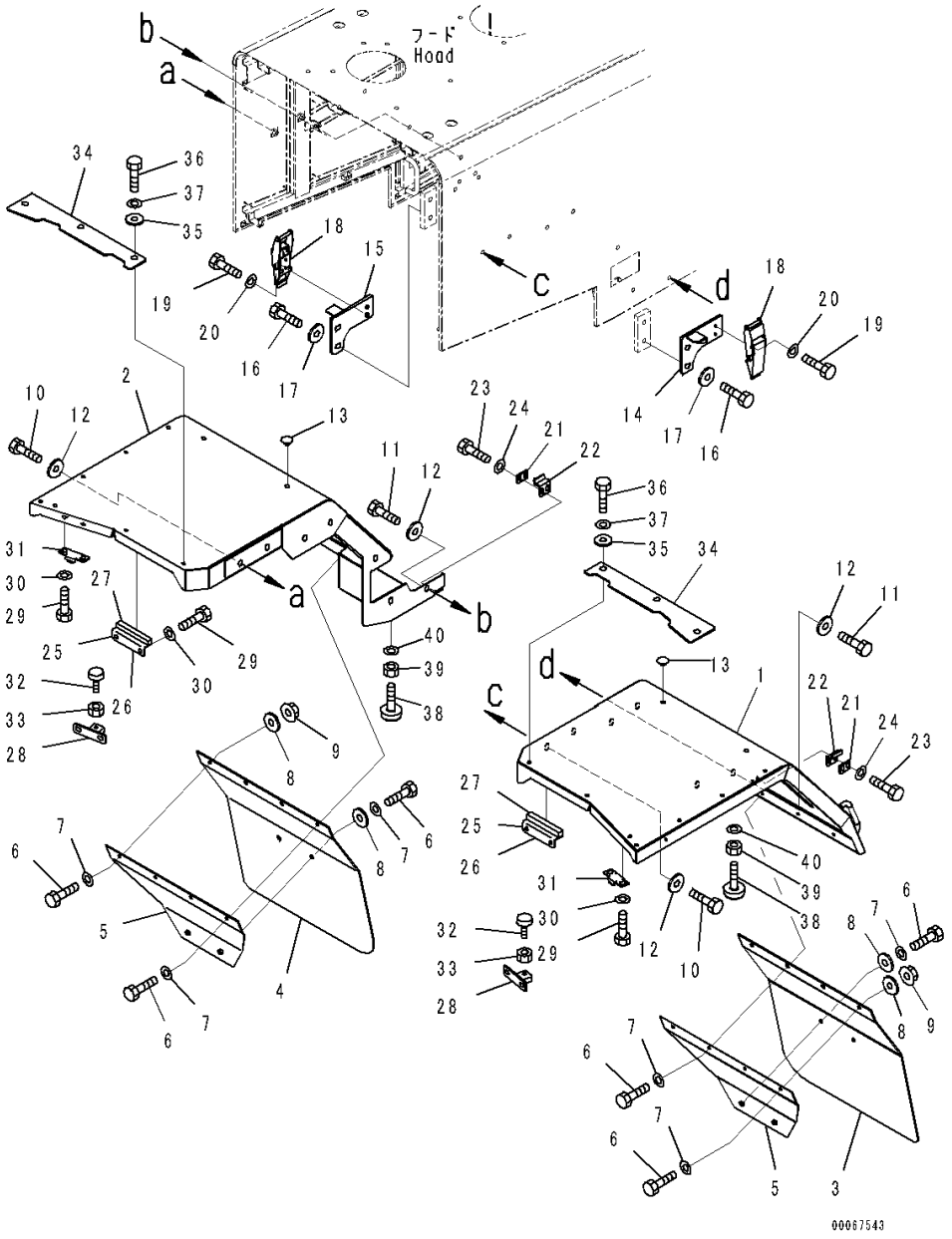

Index	Code	Part Number	Description	Qty	Serial Number
1		421-54-44710	Fender, L.H.	1	90216-
2		421-54-44720	Fender, R.H.	1	90216-
3		421-54-44730	Sheet, L.H.	1	90216-
4		421-54-44740	Sheet, R.H.	1	90216-
5		421-54-44870	Plate	2	90216-
6		01010-D1025	Bolt	12	90216-
7		01643-71032	Washer	12	90216-
8		421-54-34550	Washer	6	90216-
9		01584-31008	Nut	2	90216-
10		01010-D1230	Bolt	12	90216-
11		01010-D1225	Bolt	2	90216-
12		421-03-31590	Washer	14	90216-
13		421-54-22990	Plug	4	90216-
14		421-54-45270	Bracket, L.H.	1	90216-
15		421-54-45280	Bracket, R.H.	1	90216-
16		01010-D1250	Bolt	4	90216-
17		421-03-31590	Washer	4	90216-
18		423-54-44150	Catcher Assembly	2	90216-
19		01010-D0825	Bolt	4	90216-
20		01643-70823	Washer	4	90216-
21		120-01-31321	Plate	2	90216-
22		423-54-44130	Hook	2	90216-
23		01010-D0825	Bolt	4	90216-
24		01643-70823	Washer	4	90216-
25		423-54-34730	Bracket	2	90216-
26		423-54-34740	• Bracket	1	90216-
27		423-54-34780	• Cushion	1	90216-
28		423-54-44110	Bracket	2	90216-
29		01010-D1225	Bolt	12	90216-
30		01643-71232	Washer	12	90216-
31		423-54-44180	Bracket	2	90216-
32		203-54-63830	Stopper	2	90216-
33		01580-11008	Nut	2	90216-
34		421-54-44570	Sheet	2	90216-
35		423-54-44380	Collar	6	90216-
36		01010-D1025	Bolt	6	90216-
37		01643-71032	Washer	6	90216-
38		20Y-54-11611	Stopper	2	90216-
39		01580-11008	Nut	2	90216-
40		01643-31032	Washer	4	90216-

FIG. M4200-001002 Rear Fender (Rubber and Cover)

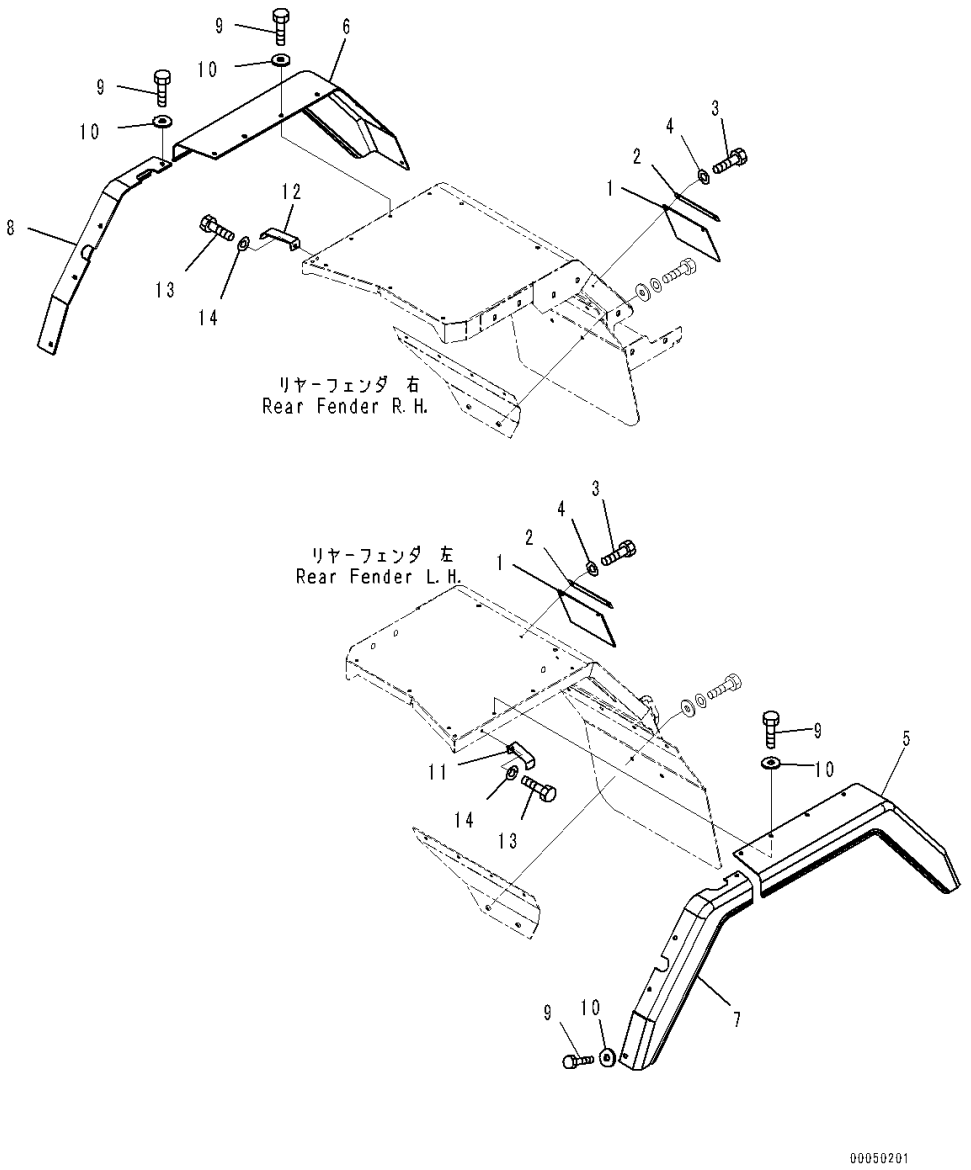

Index	Code	Part Number	Description	Qty	Serial Number
1		423-54-34440	Rubber	2	90216-
2		423-54-34410	Plate	2	90216-
3		01010-D1020	Bolt	4	90216-
4		01643-71032	Washer	4	90216-
5		421-54-34411	Cover, Rear, L.H.	1	90216-
6		421-54-34421	Cover, Rear, R.H.	1	90216-
7		421-54-34432	Cover, Front, L.H.	1	90216-
8		421-54-34442	Cover, Front, R.H.	1	90216-
9		01010-D1025	Bolt	22	90216-
10		421-54-34550	Washer	22	90216-
11		421-54-34691	Plate	1	90216-
12		421-54-34730	Plate	1	90216-
13		01010-D1020	Bolt	2	90216-
14		01643-71032	Washer	2	90216-

FIG. M4210-007001 Front Fender (With Wide Fender, Tire Stopper)

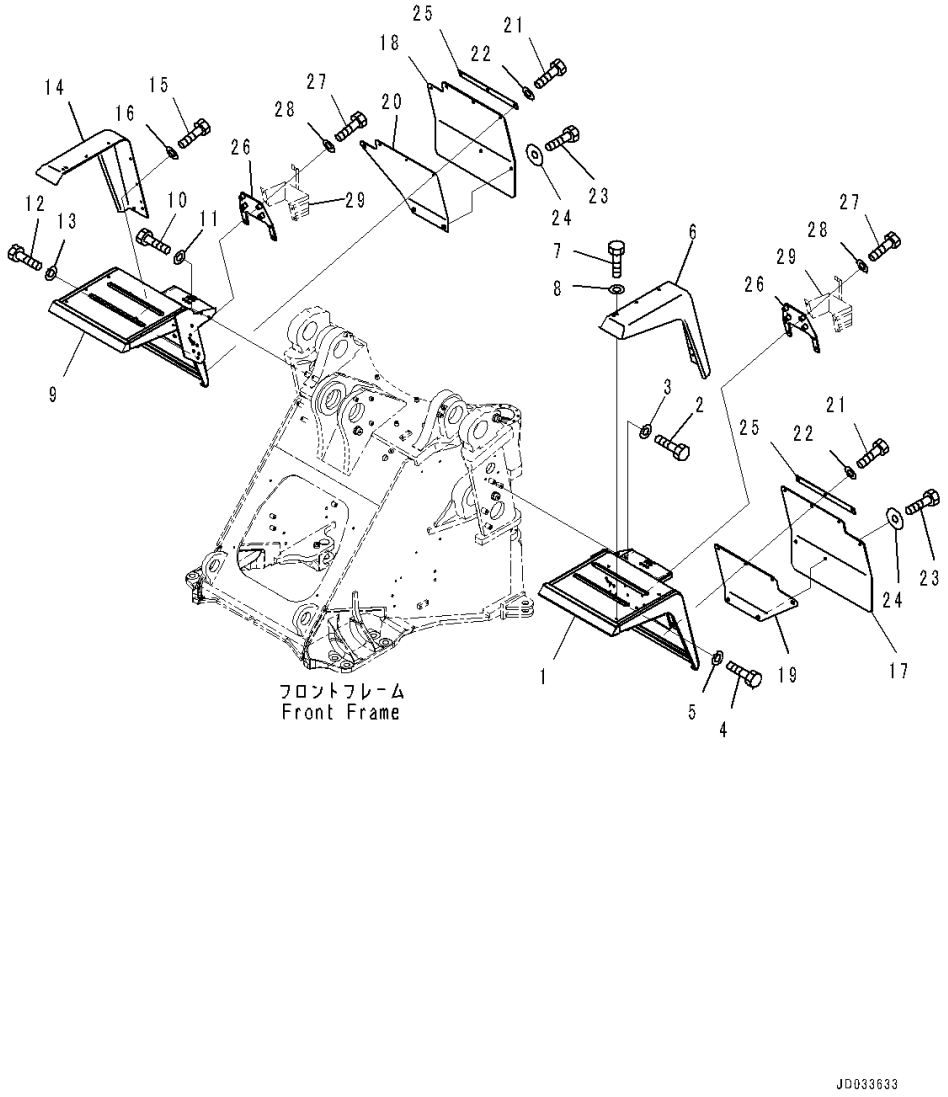

Index	Code	Part Number	Description	Qty	Serial Number
1		421-54-45731	Fender, L.H.	1	90216-
2		01010-81230	Bolt	3	90216-
3		01643-31232	Washer	3	90216-
4		01010-81240	Bolt	2	90216-
5		01643-31232	Washer	2	90216-
6		421-54-45610	Fender, L.H.	1	90216-
7		01010-D1020	Bolt	6	90216-
8		01643-71032	Washer	6	90216-
9		421-54-45741	Fender, R.H.	1	90216-
10		01010-81230	Bolt	3	90216-
11		01643-31232	Washer	3	90216-
12		01010-81240	Bolt	2	90216-
13		01643-31232	Washer	2	90216-
14		421-54-45620	Fender, R.H.	1	90216-
15		01010-D1020	Bolt	6	90216-
16		01643-71032	Washer	6	90216-
17		421-54-45430	Sheet, L.H.	1	90216-
18		421-54-45440	Sheet, R.H.	1	90216-
19		421-54-45450	Plate, L.H.	1	90216-
20		421-54-45460	Plate, R.H.	1	90216-
21		01010-D1035	Bolt	6	90216-
22		01643-71032	Washer	6	90216-
23		01010-D1020	Bolt	6	90216-
24		421-54-34550	Washer	6	90216-
25		421-54-45480	Plate	2	90216-
26		421-54-45910	Bracket	2	90216-
27		01010-81055	Bolt	8	90216-
28		01643-31032	Washer	8	90216-
29		(421-Z65-H180)	Bracket(Refer to Page 876)		-
		(421-Z65-H180)	Bracket(Refer to Page 877)		-
		(421-Z65-H180)	Bracket(Refer to Page 875)		-
		(421-Z65-H180)	Bracket(Refer to Page 879)		-
		(421-Z65-H180)	Bracket(Refer to Page 878)		-

FIG. M4210-006001 Front Fender (With Wide Fender)

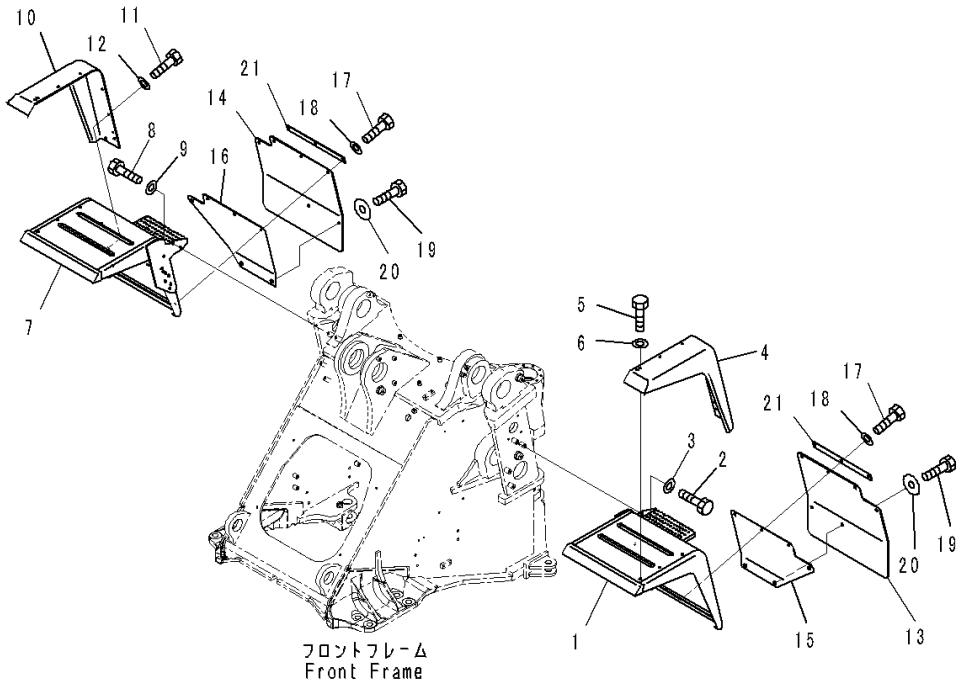

Index	Code	Part Number	Description	Qty	Serial Number
1		421-54-45410	Fender, L.H.	1	90216-
2		01010-81230	Bolt	5	90216-
3		01643-31232	Washer	5	90216-
4		421-54-45610	Fender, L.H.	1	90216-
5		01010-D1020	Bolt	6	90216-
6		01643-71032	Washer	6	90216-
7		421-54-45420	Fender, R.H.	1	90216-
8		01010-81230	Bolt	5	90216-
9		01643-31232	Washer	5	90216-
10		421-54-45620	Fender, R.H.	1	90216-
11		01010-D1020	Bolt	6	90216-
12		01643-71032	Washer	6	90216-
13		421-54-45430	Sheet, L.H.	1	90216-
14		421-54-45440	Sheet, R.H.	1	90216-
15		421-54-45450	Plate, L.H.	1	90216-
16		421-54-45460	Plate, R.H.	1	90216-
17		01010-D1035	Bolt	6	90216-
18		01643-71032	Washer	6	90216-
19		01010-D1020	Bolt	6	90216-
20		421-54-34550	Washer	6	90216-
21		421-54-45480	Plate	2	90216-

FIG. M4210-005001 Front Fender (Without Wide Fender)

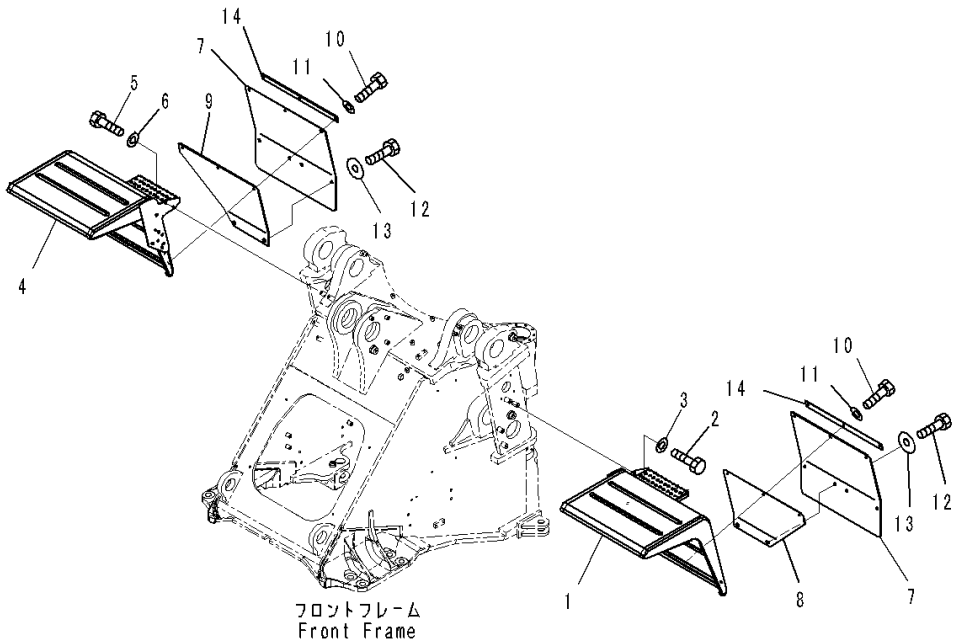

Index	Code	Part Number	Description	Qty	Serial Number
1		424-54-44411	Fender, L.H.	1	90216-
2		01010-81230	Bolt	5	90216-
3		01643-31232	Washer	5	90216-
4		424-54-44421	Fender, R.H.	1	90216-
5		01010-81230	Bolt	5	90216-
6		01643-31232	Washer	5	90216-
7		421-54-45230	Sheet	2	90216-
8		421-54-45240	Plate	1	90216-
9		421-54-45250	Plate	1	90216-
10		01010-D1035	Bolt	6	90216-
11		01643-71032	Washer	6	90216-
12		01010-D1020	Bolt	4	90216-
13		421-54-34550	Washer	4	90216-
14		421-54-35180	Plate	2	90216-

FIG. M4230-005001 Floor Cover (With Orbitrol Steering System, Joystick Steering System)

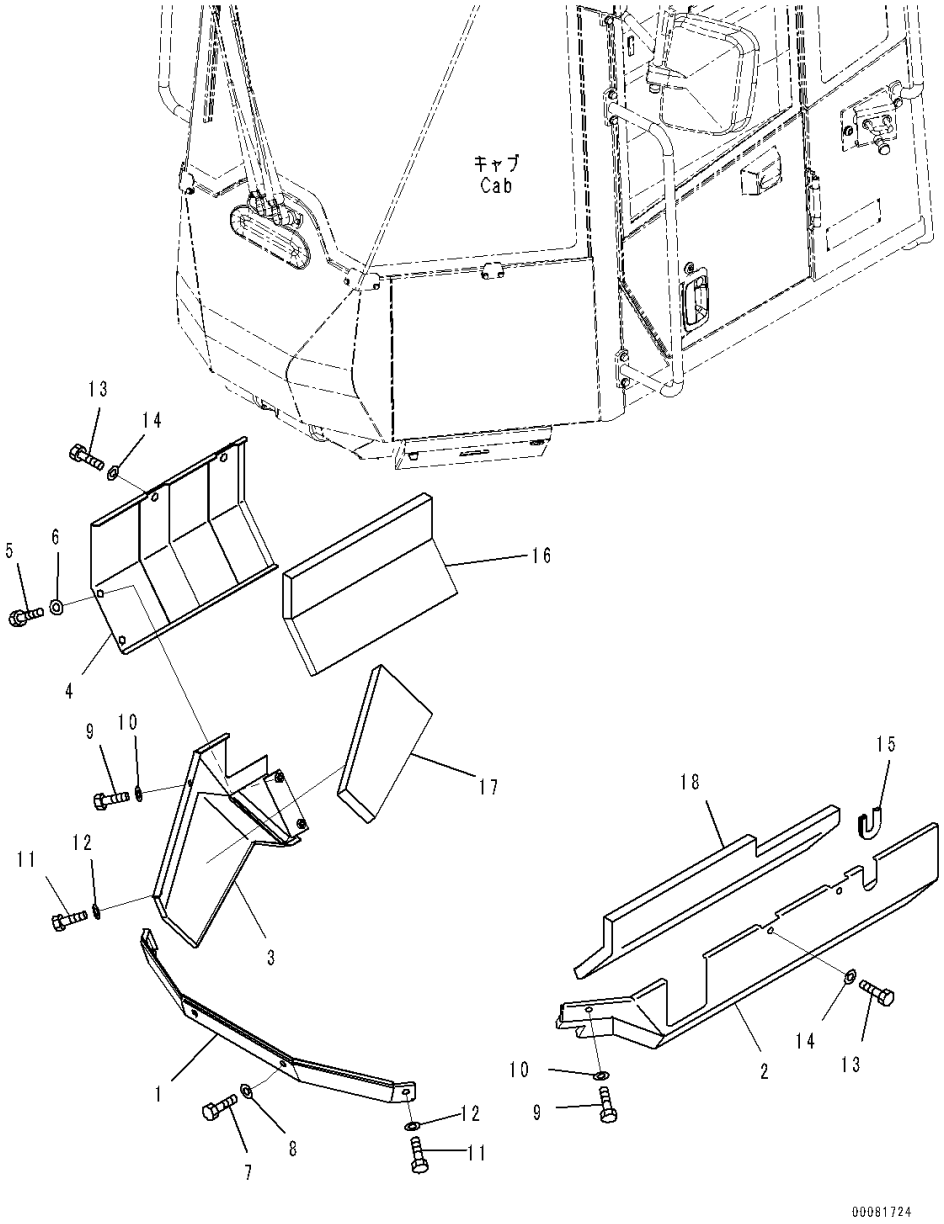

Index	Code	Part Number	Description	Qty	Serial Number
1		423-54-44370	Cover	1	90216-
2		421-54-42120	Cover, L.H.	1	90216-
3		421-54-43690	Cover, R.H.	1	90216-
4		421-54-43790	Cover, R.H.	1	90216-
5		01010-81020	Bolt	2	90216-
6		01643-31032	Washer	2	90216-
7		01010-81016	Bolt	2	90216-
8		01643-31032	Washer	2	90216-
9		01010-81045	Bolt	2	90216-
10		01643-31032	Washer	2	90216-
11		01010-81020	Bolt	3	90216-
12		01643-31032	Washer	3	90216-
13		01010-81025	Bolt	4	90216-
14		01643-31032	Washer	4	90216-
15		23S-61-51310	Seal	1	90216-
16		421-54-44840	Sheet	1	90216-
17		421-54-44160	Sheet	1	90216-
18		421-54-44660	Sheet	1	90216-

FIG. M4310-005001 Ladder (With Auto-greasing System) (Floor and Ladder L.H.)

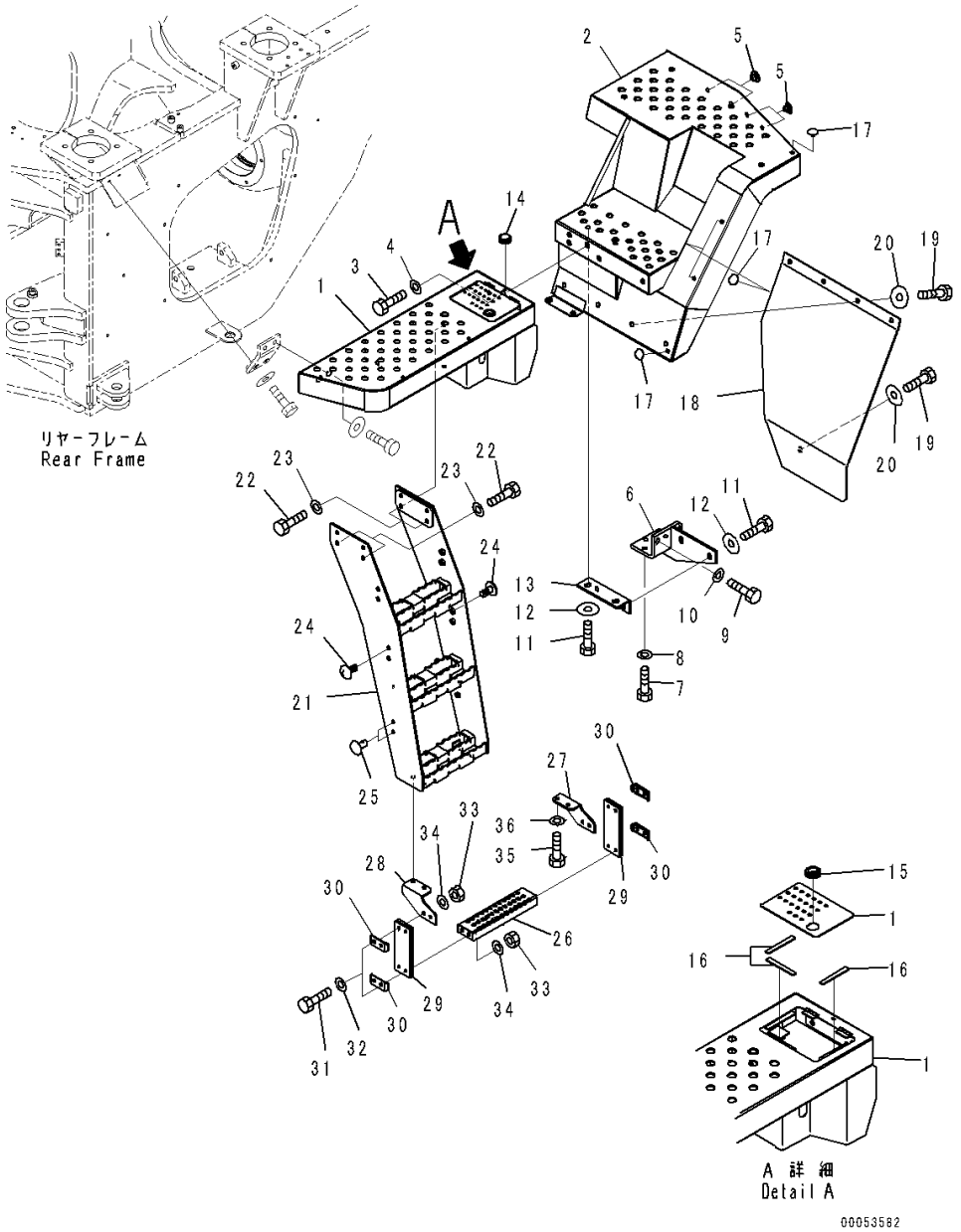

Index	Code	Part Number	Description	Qty	Serial Number
1		421-54-44362	Floor, L.H.	1	90216-
		423-54-44390	• Hinge, Welded	2	90216-
2		421-S95-7940	Floor, L.H.	1	90216-
3		01010-81230	Bolt	4	90216-
4		01643-31232	Washer	4	90216-
5		421-54-22990	Plug	4	90216-
6		423-54-41320	Bracket, L.H.	1	90216-
7		01010-D1235	Bolt	4	90216-
8		01643-71232	Washer	4	90216-
9		01010-D1230	Bolt	2	90216-
10		01643-71232	Washer	2	90216-
11		01010-D1230	Bolt	4	90216-
12		421-03-31590	Washer	4	90216-
13		423-54-44140	Bracket	1	90216-
14		09415-00506	Cap	1	90216-
15		08037-02512	Grommet	1	90216-
16		418-54-22190	Cushion	3	90216-
17		426-56-21990	Plug	4	90216-
18		421-54-44230	Sheet, L.H.	1	90216-
19		01010-D1025	Bolt	5	90216-
20		421-54-34550	Washer	5	90216-
21		421-54-44861	Ladder	1	90216-
22		01010-D1235	Bolt	4	90216-
23		01643-71232	Washer	4	90216-
24		22L-46-12150	Cap	4	90216-
25		416-54-34230	Plug	2	90216-
26		421-54-34611	Step	1	90216-
27		424-54-44861	Plate	1	90216-
28		424-54-44951	Plate	1	90216-
29		421-54-44392	Rubber	2	90216-
30		428-T86-1650	Plate	4	90216-
31		01010-D1055	Bolt	8	90216-
32		01643-71032	Washer	8	90216-
33		01596-01009	Nut, Flanged	8	90216-
34		01643-71032	Washer	8	90216-
35		01010-D1025	Bolt	4	90216-
36		01643-71032	Washer	4	90216-

FIG. M4310-005002 Ladder (Floor and Ladder R.H.)

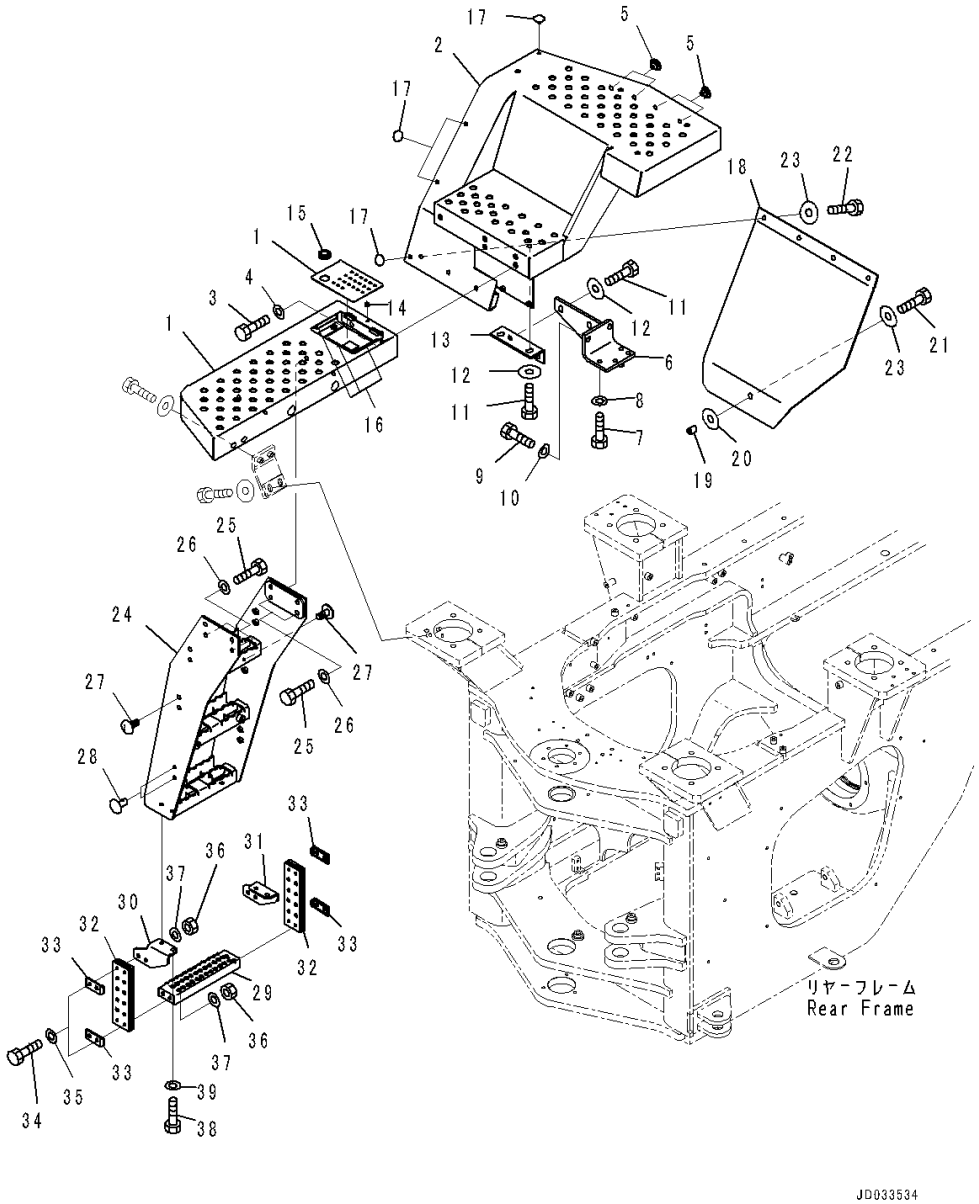

Index	Code	Part Number	Description	Qty	Serial Number
		Note: This list covers following specifications.			
		With Auto-greasing System			
		Without Auto-greasing System			
1		421-54-44582	Floor, R.H.	1	90216-
		423-54-44390	• Hinge, Welded	2	90216-
2		421-54-44451	Floor, R.H.	1	90216-
3		01010-81230	Bolt	4	90216-
4		01643-31232	Washer	4	90216-
5		421-54-22990	Plug	4	90216-
6		423-54-41330	Bracket, R.H.	1	90216-
7		01010-D1235	Bolt	4	90216-
8		01643-71232	Washer	4	90216-
9		01010-D1230	Bolt	2	90216-
10		01643-71232	Washer	2	90216-
11		01010-D1230	Bolt	4	90216-
12		421-03-31590	Washer	4	90216-
13		423-54-44140	Bracket	1	90216-
14		09415-00506	Cap	1	90216-
15		08037-02512	Grommet	1	90216-
16		418-54-22190	Cushion	3	90216-
17		426-56-21990	Plug	4	90216-
18		421-54-44150	Sheet, R.H.	1	90216-
19		23B-953-3460	Spacer	1	90216-
20		421-54-34550	Washer	1	90216-
21		01010-D1050	Bolt	1	90216-
22		01010-D1025	Bolt	4	90216-
23		421-54-34550	Washer	5	90216-
24		421-54-44861	Ladder	1	90216-
25		01010-D1235	Bolt	4	90216-
26		01643-71232	Washer	4	90216-
27		22L-46-12150	Cap	4	90216-
28		416-54-34230	Plug	2	90216-
29		421-54-34611	Step	1	90216-
30		424-54-44861	Plate	1	90216-
31		424-54-44951	Plate	1	90216-
32		421-54-44392	Rubber	2	90216-
33		428-T86-1650	Plate	4	90216-
34		01010-D1055	Bolt	8	90216-
35		01643-71032	Washer	8	90216-
36		01596-01009	Nut, Flanged	8	90216-

FIG. M4310-005002 Ladder (Floor and Ladder R.H.)

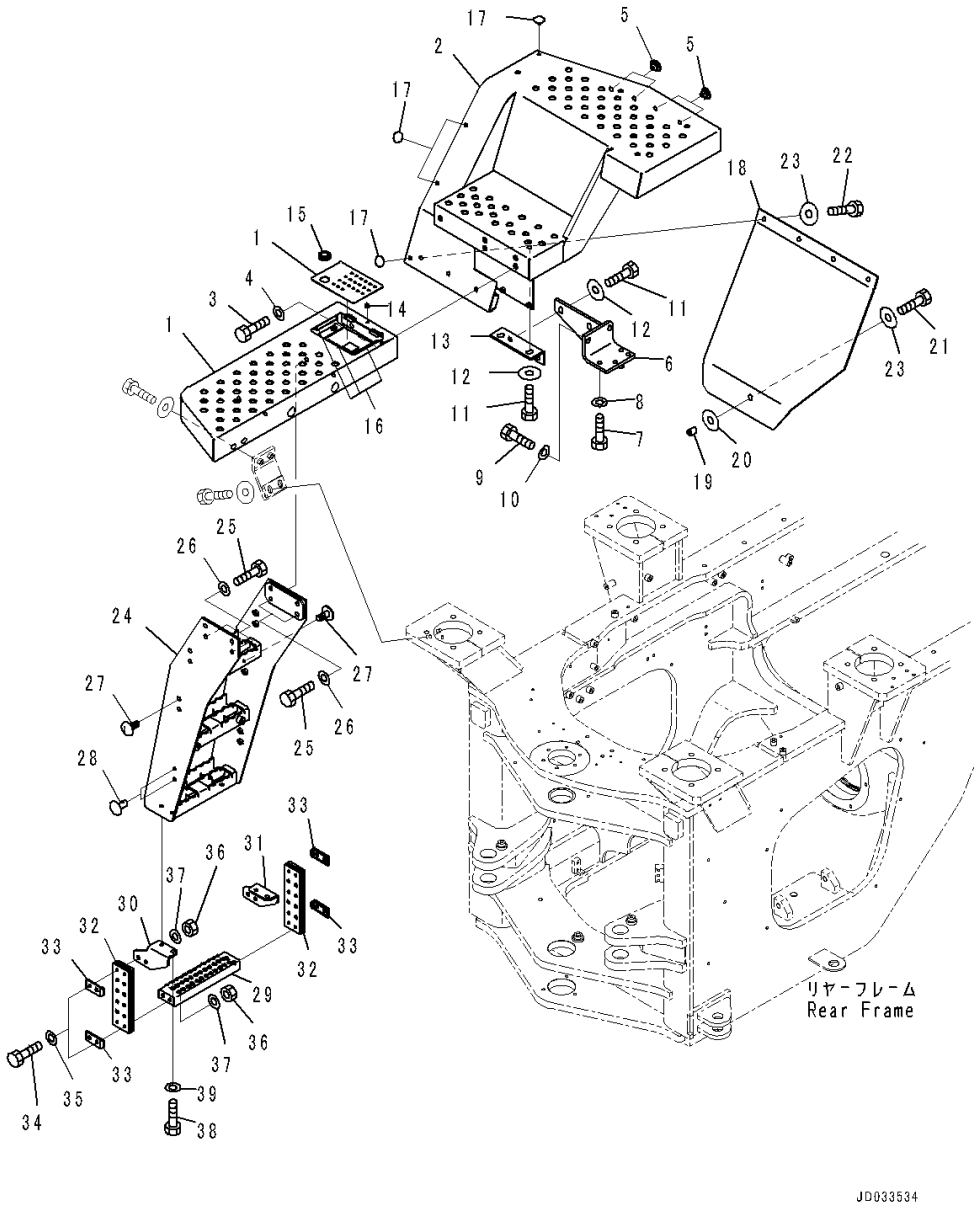

Index	Code	Part Number	Description	Qty	Serial Number
37		01643-71032	Washer	8	90216-
38		01010-D1025	Bolt	4	90216-
39		01643-71032	Washer	4	90216-

FIG. M4310-005003 Ladder (Mounting)

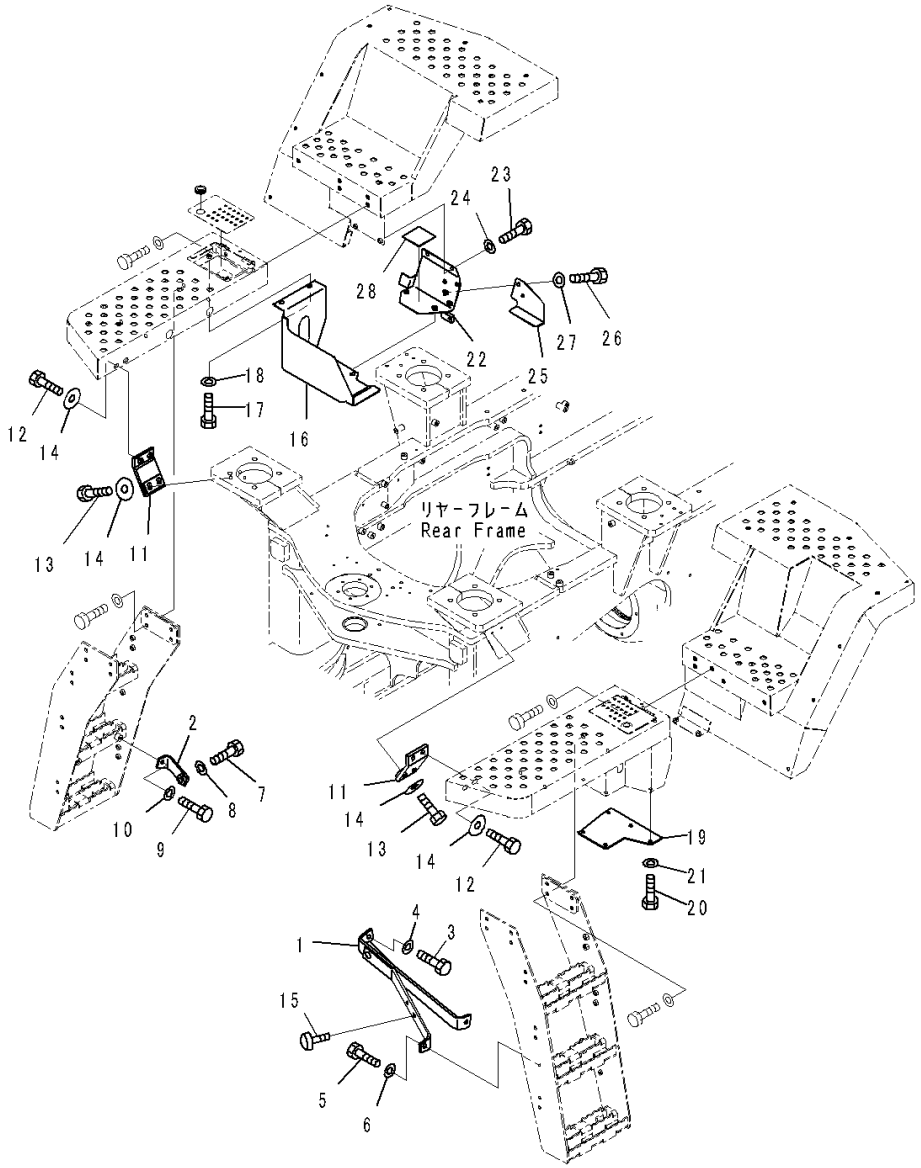

Index	Code	Part Number	Description	Qty	Serial Number
		Note: This list covers following specifications.			
		With Auto-greasing System			
		Without Auto-greasing System			
1		424-54-44964	Bracket, L.H.	1	90216-
2		421-54-44971	Bracket, R.H.	1	90216-
3		01010-D1230	Bolt	1	90216-
4		01643-71232	Washer	1	90216-
5		01010-D1230	Bolt	2	90216-
6		425-54-31350	Washer	2	90216-
7		01010-D1245	Bolt	1	90216-
8		01643-71232	Washer	1	90216-
9		01010-D1225	Bolt	1	90216-
10		01643-71232	Washer	1	90216-
11		421-54-44430	Bracket	2	90216-
12		01010-81240	Bolt	4	90216-
13		01010-81245	Bolt	4	90216-
14		175-54-34170	Washer	8	90216-
15		416-54-34230	Plug	1	90216-
16		421-54-44590	Cover	1	90216-
17		01010-D1020	Bolt	4	90216-
18		01643-71032	Washer	4	90216-
19		421-54-44260	Plate	1	90216-
20		01010-D1020	Bolt	5	90216-
21		01643-71032	Washer	5	90216-
22		421-54-44491	Cover	1	90216-
23		01010-D1020	Bolt	2	90216-
24		01643-71032	Washer	2	90216-
25		424-54-44790	Cover	1	90216-
26		01010-D1020	Bolt	2	90216-
27		01643-71032	Washer	2	90216-
28		424-54-44990	Sheet	1	90216-

FIG. M4310-004001 Ladder (Without Auto-greasing System) (Floor and Ladder L.H.)

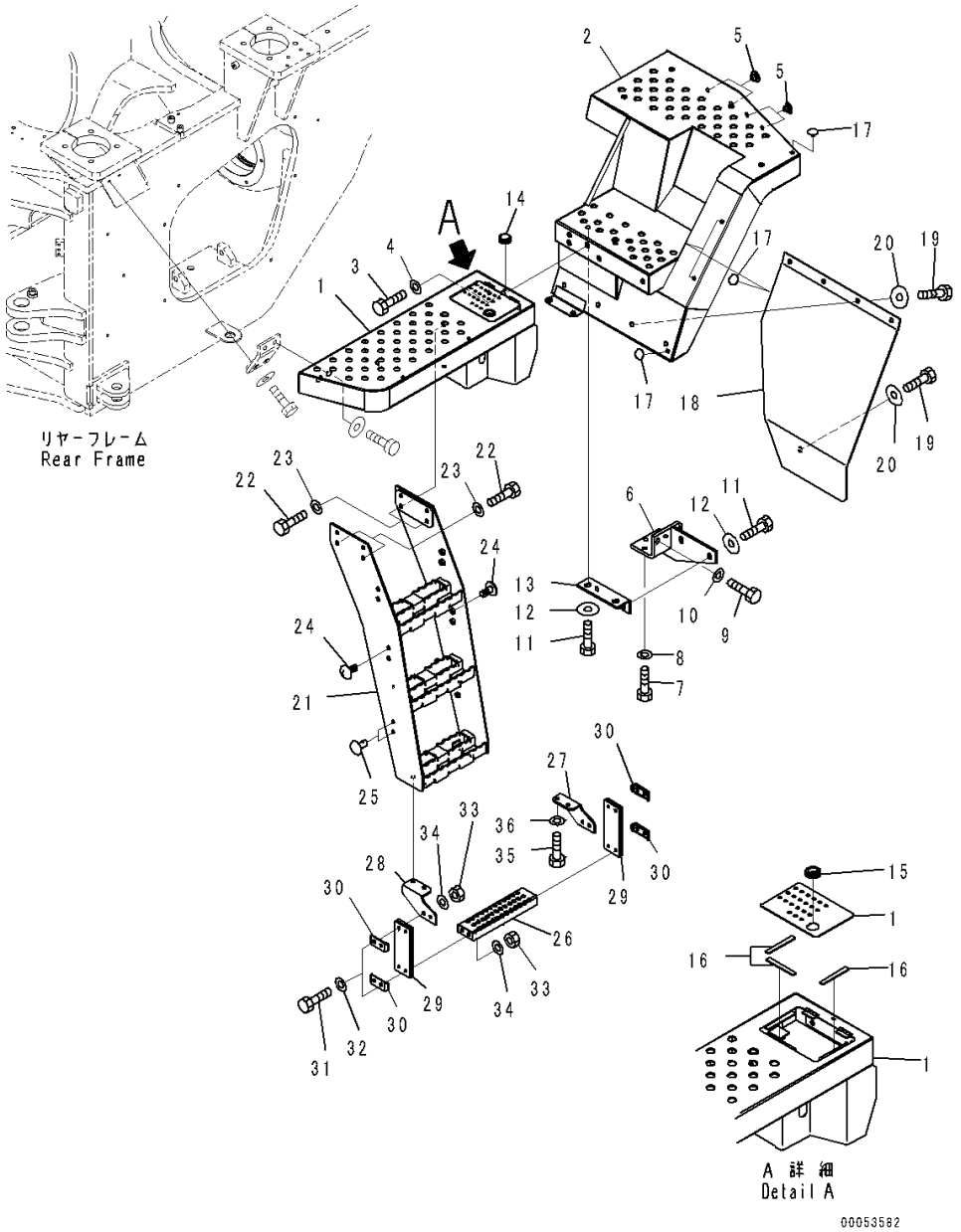

Index	Code	Part Number	Description	Qty	Serial Number
1		421-54-44362	Floor, L.H.	1	90216-
		423-54-44390	• Hinge, Welded	2	90216-
2		421-54-44441	Floor, L.H.	1	90216-
3		01010-81230	Bolt	4	90216-
4		01643-31232	Washer	4	90216-
5		421-54-22990	Plug	4	90216-
6		423-54-41320	Bracket, L.H.	1	90216-
7		01010-D1235	Bolt	4	90216-
8		01643-71232	Washer	4	90216-
9		01010-D1230	Bolt	2	90216-
10		01643-71232	Washer	2	90216-
11		01010-D1230	Bolt	4	90216-
12		421-03-31590	Washer	4	90216-
13		423-54-44140	Bracket	1	90216-
14		09415-00506	Cap	1	90216-
15		08037-02512	Grommet	1	90216-
16		418-54-22190	Cushion	3	90216-
17		426-56-21990	Plug	4	90216-
18		421-54-44230	Sheet, L.H.	1	90216-
19		01010-D1025	Bolt	5	90216-
20		421-54-34550	Washer	5	90216-
21		421-54-44861	Ladder	1	90216-
22		01010-D1235	Bolt	4	90216-
23		01643-71232	Washer	4	90216-
24		22L-46-12150	Cap	4	90216-
25		416-54-34230	Plug	2	90216-
26		421-54-34611	Step	1	90216-
27		424-54-44861	Plate	1	90216-
28		424-54-44951	Plate	1	90216-
29		421-54-44392	Rubber	2	90216-
30		428-T86-1650	Plate	4	90216-
31		01010-D1055	Bolt	8	90216-
32		01643-71032	Washer	8	90216-
33		01596-01009	Nut, Flanged	8	90216-
34		01643-71032	Washer	8	90216-
35		01010-D1025	Bolt	4	90216-
36		01643-71032	Washer	4	90216-

FIG. M4320-001001 Handrail (With Rear Full Fender)

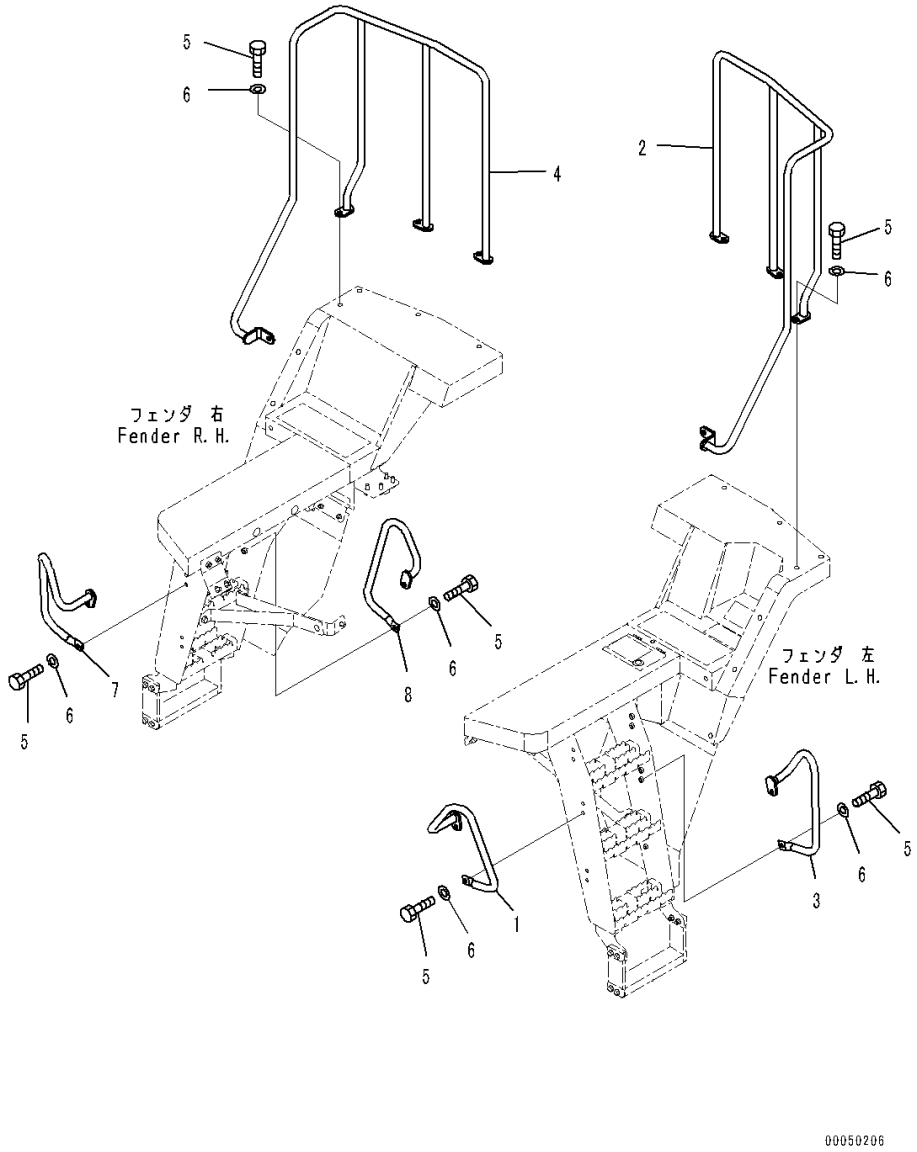

Index	Code	Part Number	Description	Qty	Serial Number
1		423-54-45110	Handrail, L.H.	1	90216-
2		421-54-45190	Handrail, L.H.	1	90216-
3		423-54-45140	Handrail, L.H.	1	90216-
4		421-54-45180	Handrail, R.H.	1	90216-
5		01010-D1230	Bolt	18	90216-
6		01643-71232	Washer	18	90216-
7		423-54-45120	Handrail, R.H.	1	90216-
8		423-54-45150	Handrail, R.H.	1	90216-

FIG. M4320-002001 Handrail (Without Rear Full Fender)

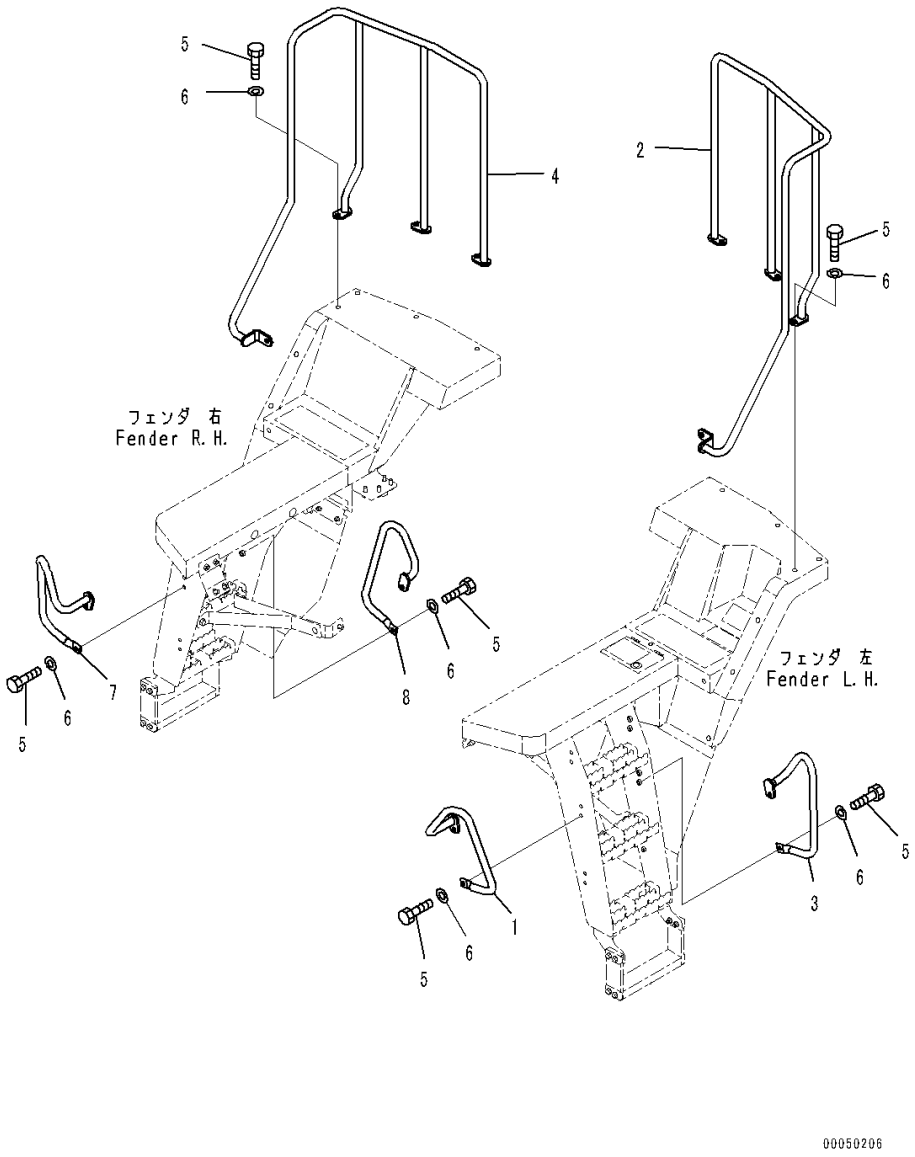

Index	Code	Part Number	Description	Qty	Serial Number
1		423-54-45110	Handrail, L.H.	1	90216-
2		421-54-45170	Handrail, L.H.	1	90216-
3		423-54-45140	Handrail, L.H.	1	90216-
4		421-54-45180	Handrail, R.H.	1	90216-
5		01010-D1230	Bolt	18	90216-
6		01643-71232	Washer	18	90216-
7		423-54-45120	Handrail, R.H.	1	90216-
8		423-54-45150	Handrail, R.H.	1	90216-

FIG. M4410-004001 Mirror (Without Number Plate) (Side Mirror)

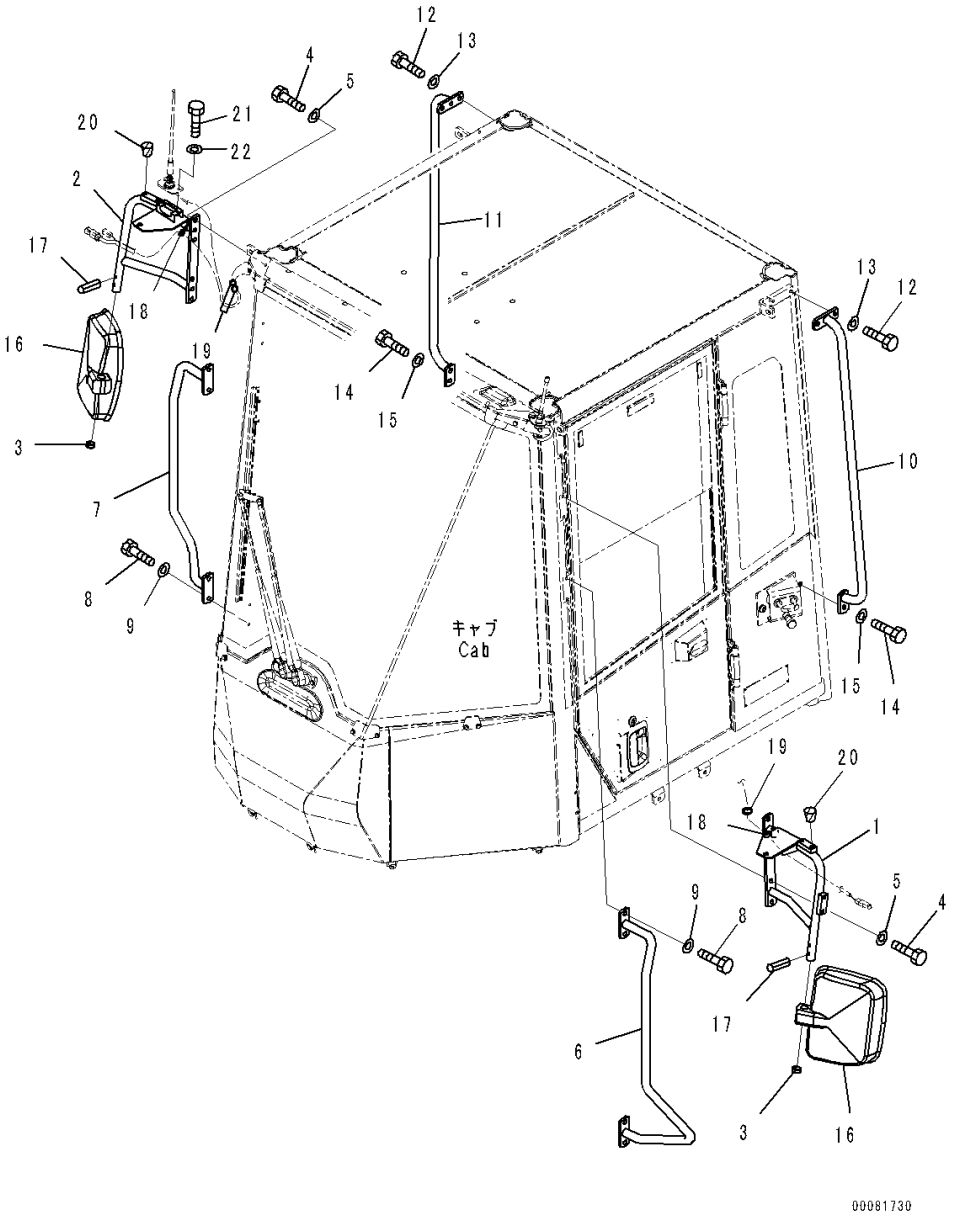

Index	Code	Part Number	Description	Qty	Serial Number
1		423-54-33213	Stay	1	90768-
2		423-54-33221	Stay	1	90768-
3		22M-54-26180	Cap	2	90216-
4		01010-D1025	Bolt	8	90216-
5		01643-71032	Washer	8	90216-
6		421-926-4950	Handrail	1	90216-
7		421-926-4960	Handrail	1	90216-
8		01010-D1025	Bolt	8	90216-
9		01643-71032	Washer	8	90216-
10		425-926-3832	Handrail	1	90768-
11		425-926-3842	Handrail	1	90768-
12		01010-D1025	Bolt	4	90216-
13		01643-71032	Washer	4	90216-
14		01010-D1035	Bolt	2	90216-
15		01643-71032	Washer	2	90216-
16		421-54-25610	Mirror	2	90216-
		421-54-25620	• Bushing	2	90216-
		421-54-25630	• Holder	1	90216-
		421-54-25640	• Lens	1	90216-
		421-54-25650	• Frame	1	90216-
		421-54-25660	• Screw	4	90216-
17		04025-00632	Pin, Spring	2	90216-
18		08034-40521	Band	2	90216-
19		08034-20519	Band	3	90216-
20		07049-00608	Plug, Cork	4	90216-
21		01010-80616	Bolt	2	90216-
22		01643-30623	Washer	2	90216-

FIG. M4410-004002 Mirror (Without Number Plate) (Under Mirror)

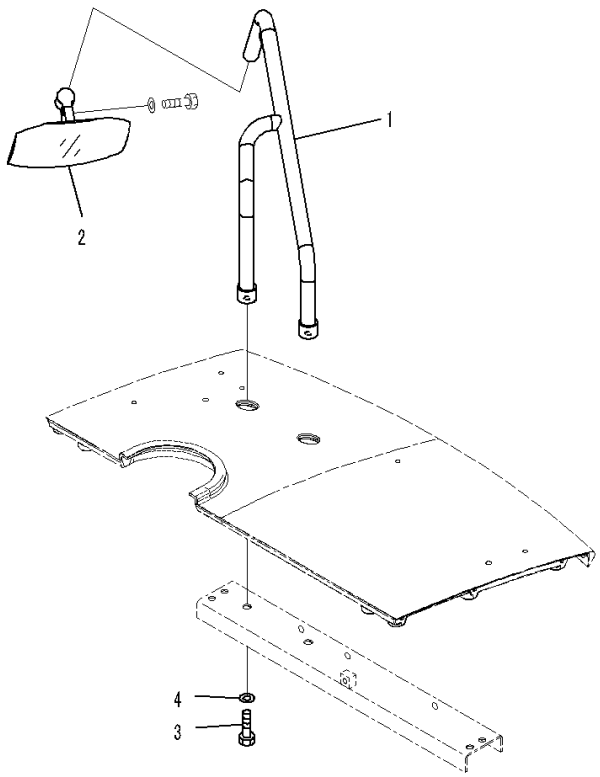

00050725

Index	Code	Part Number	Description	Qty	Serial Number
1		423-976-4211	Stay	1	90216-
2		423-976-4230	Mirror, Under View	1	90216-
3		01010-81225	Bolt	2	90216-
4		01643-31232	Washer	2	90216-

FIG. M4510-016001 Counterweight (1925kg, Additional Weight 380kg)

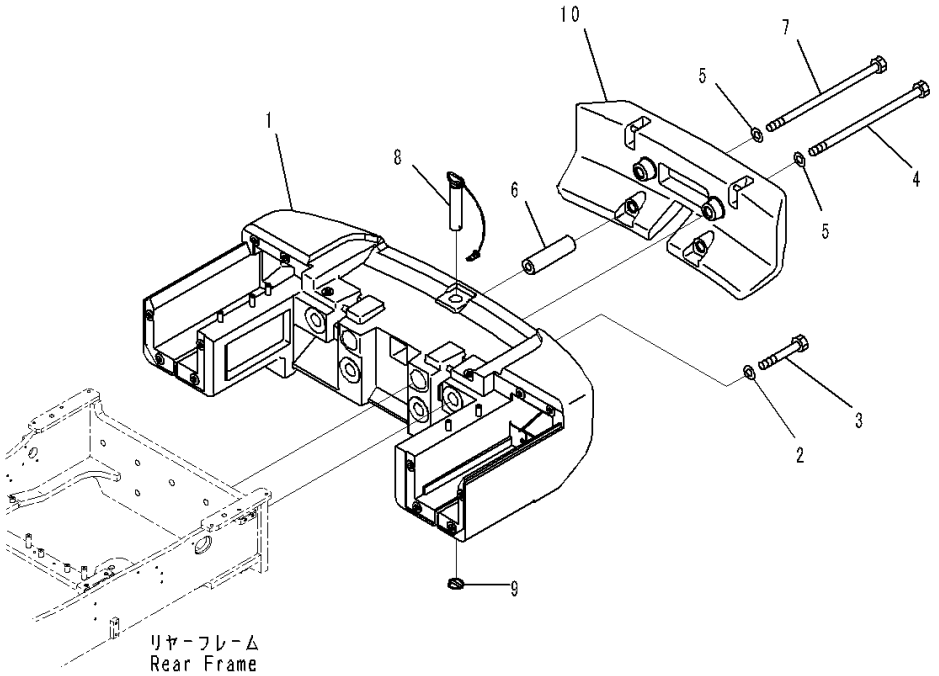

Index	Code	Part Number	Description	Qty	Serial Number
1		421-46-45250	Counterweight	1	90216-
2		01643-33080	Washer	2	90216-
3		195-09-18112	Bolt	2	90216-
4		421-975-4210	Bolt	2	90216-
5		01643-33080	Washer	4	90216-
6		421-975-4160	Spacer	4	90216-
7		421-975-4220	Bolt	2	90216-
8		421-46-45290	Pin	1	90216-
		09245-04875	• Chain	1	90216-
		09245-50060	• Hook	3	90216-
9		426-46-12280	Pin, Linch	1	90216-
10		421-975-4151	Counterweight	1	90216-

FIG. M4510-014001 Counterweight (3025kg)

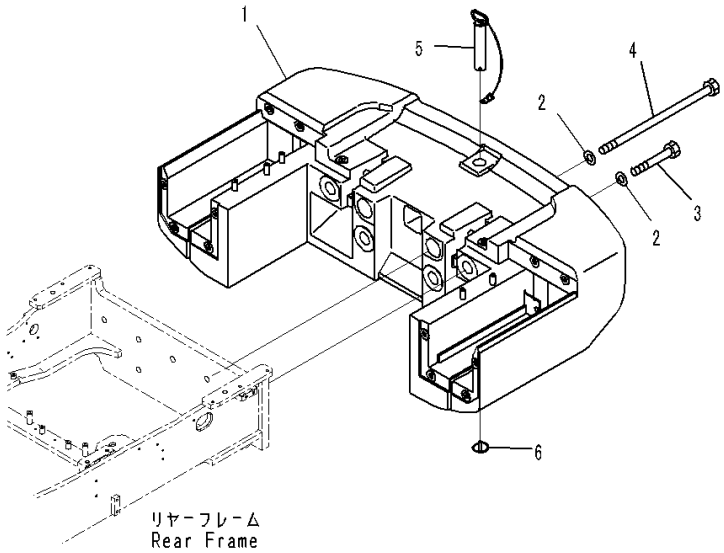

Index	Code	Part Number	Description	Qty	Serial Number
1		421-46-45240	Counterweight	1	90216-
2		01643-33080	Washer	6	90216-
3		207-46-53140	Bolt	4	90216-
4		421-46-45140	Bolt	2	90216-
5		423-46-45121	Pin	1	90216-
		09245-04875	• Chain	1	90216-
		09245-50060	• Hook	3	90216-
6		426-46-12280	Pin, Linch	1	90216-

FIG. M4510-012001 Counterweight (1925kg)

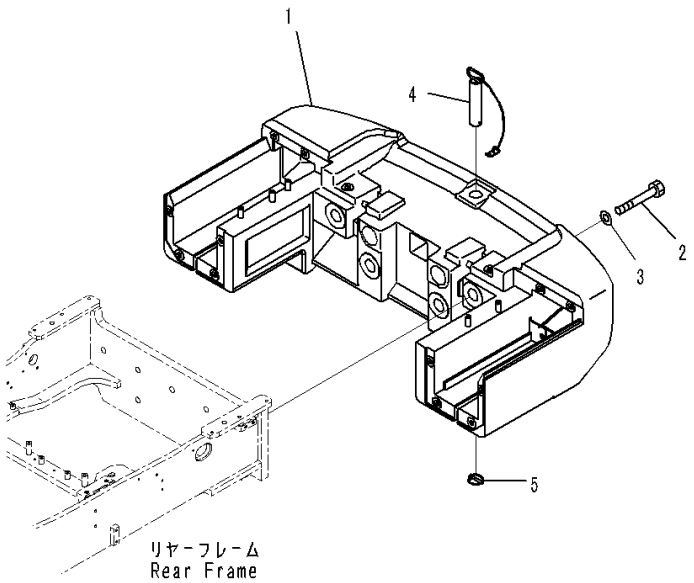

00081733

Index	Code	Part Number	Description	Qty	Serial Number
1		421-46-45250	Counterweight	1	90216-
2		195-09-18112	Bolt	4	90216-
3		01643-33080	Washer	4	90216-
4		421-46-45290	Pin	1	90216-
		09245-04875	• Chain	1	90216-
		09245-50060	• Hook	3	90216-
5		426-46-12280	Pin, Linch	1	90216-

SUSPENSION, WHEEL AND THEIR RELATED PARTS

FIG. S0110-002001 Rim (23.5-25 Tubeless Tires)

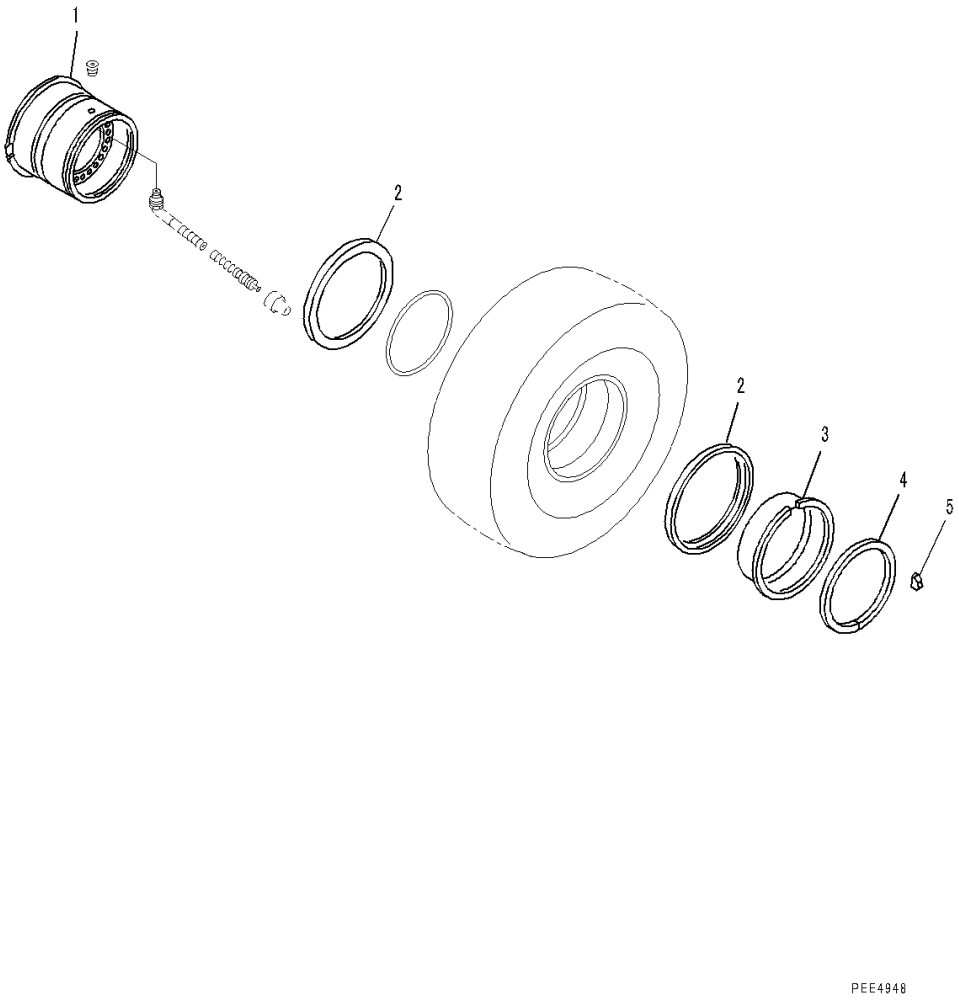

Index	Code	Part Number	Description	Qty	Serial Number
		421-W29-4100	Rim Assembly	4	90216-
1		421-W29-4110	• Base, Rim	1	90216-
2		566-30-11620	• Ring, Side	2	90216-
3		425-W36-1130	• Band, Bead Seat	1	90216-
4		425-W36-1140	• Ring, Lock	1	90216-
5		566-81-13240	• Key	1	90216-

FIG. S0110-001001 Rim (26.5-25 Tubeless Tires)

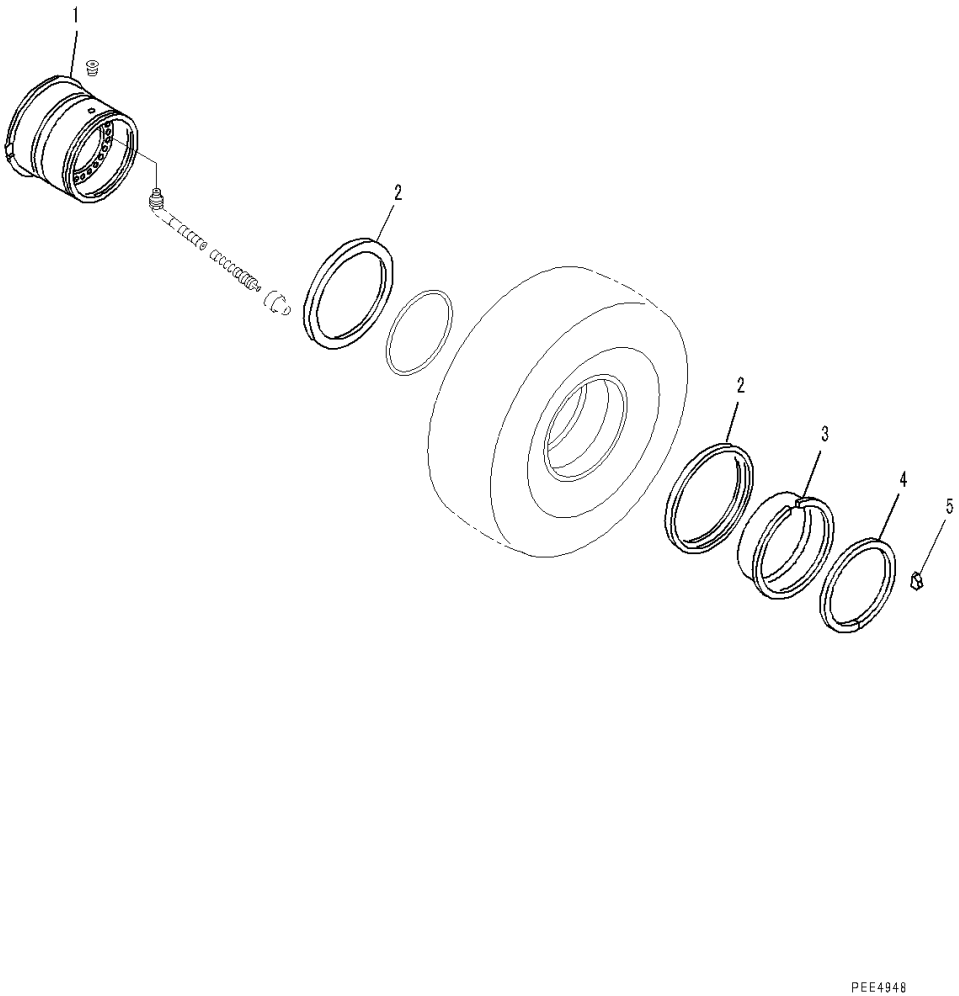

Index	Code	Part Number	Description	Qty	Serial Number
		421-W30-4100	Rim Assembly	4	90216-
1		421-W30-4110	• Base, Rim	1	90216-
2		425-30-12120	• Ring, Side	2	90216-
3		425-30-12130	• Band, Bead Seat	1	90216-
4		566-30-11640	• Ring, Lock	1	90216-
5		425-30-12140	• Drive	1	90216-

FIG. S0110-004001 Rim (26.5-25 Tubed Tires)

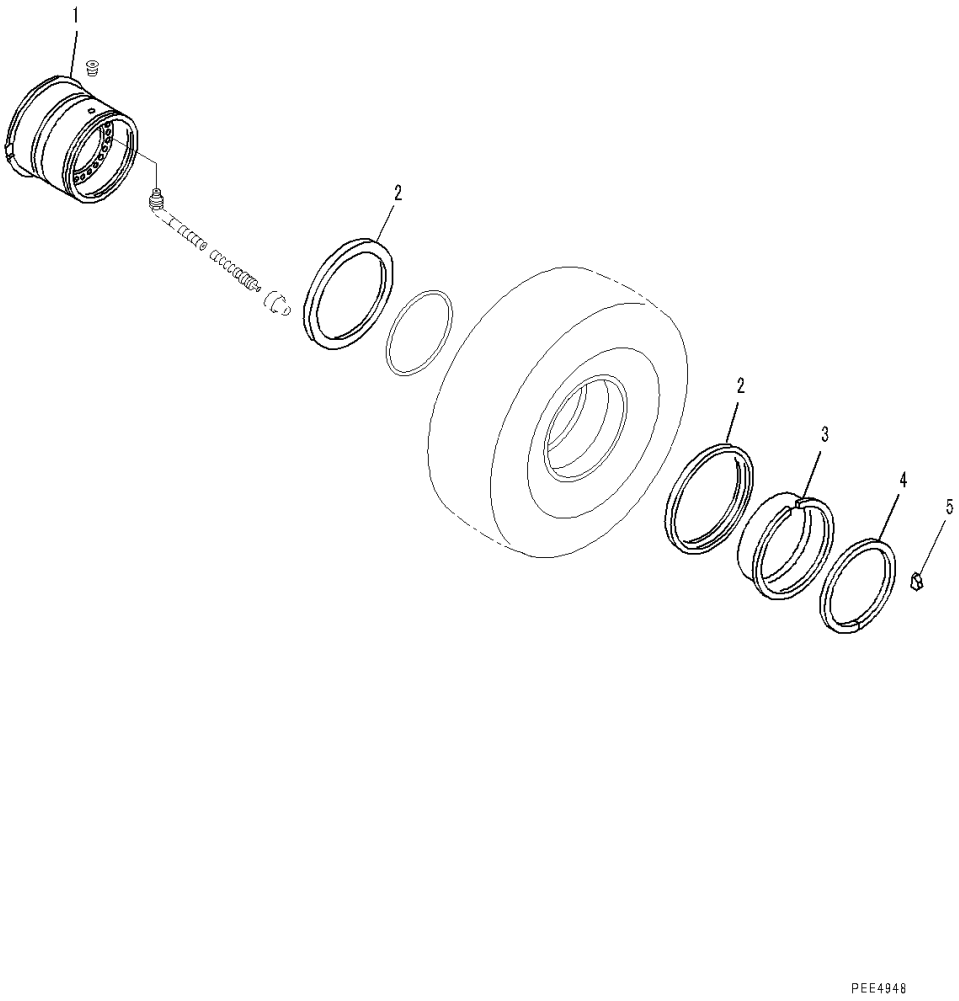

Index	Code	Part Number	Description	Qty	Serial Number
		421-W10-4100	Rim Assembly	4	90216-
1		421-W10-4110	• Base, Rim	1	90216-
2		425-30-12120	• Ring, Side	2	90216-
3		425-30-12130	• Band, Bead Seat	1	90216-
4		566-30-11640	• Ring, Lock	1	90216-
5		425-30-12140	• Drive	1	90216-

FIG. S0120-016001 Tire (23.5-25-20PR-L2 Tubeless Tires, Toyo)

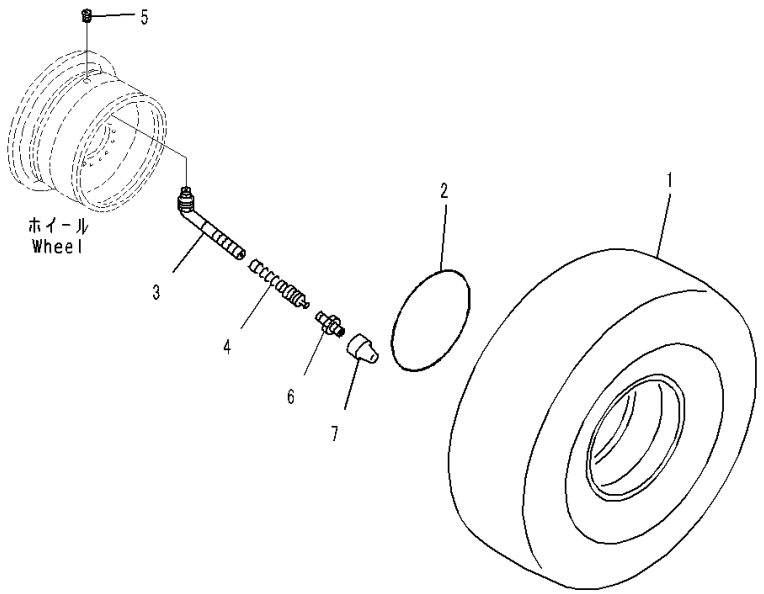

Index	Code	Part Number	Description	Qty	Serial Number
1		424-X26-1150	Tire	4	90216-
2		566-30-11660	• O-ring	1	90216-
		09280-10040	Valve Assembly, Tire	4	90216-
3		09280-10130	• Stem, Valve	1	90216-
4		09281-00041	• Core, Valve	1	90216-
5		09283-00000	• Seat, Valve	1	90216-
6		09285-00000	• Adapter	1	90216-
7		09282-00017	• Cap, Valve	1	90216-

FIG. S0120-017001 Tire (23.5-25-20PR-L2 Tubeless Tires, Yokohama)

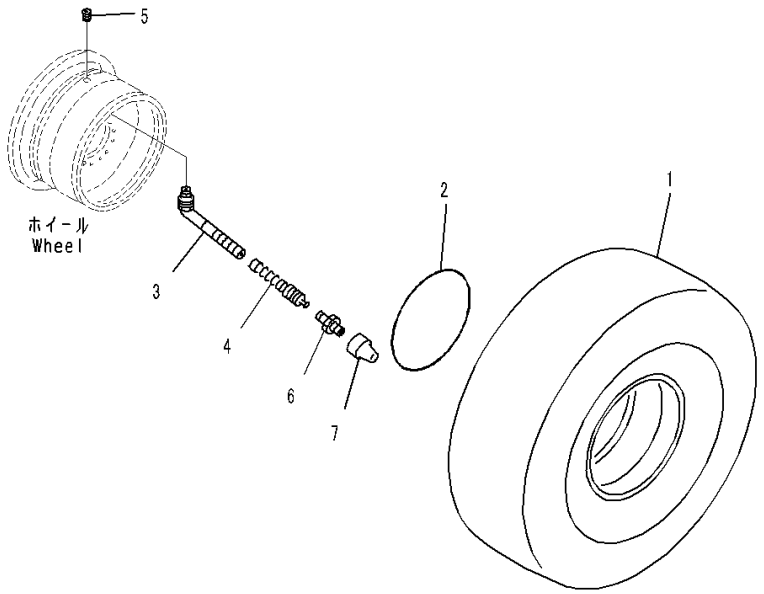

Index	Code	Part Number	Description	Qty	Serial Number
1		424-X26-1170	Tire	4	90216-
2		566-30-11660	• O-ring	1	90216-
		09280-10040	Valve Assembly, Tire	4	90216-
3		09280-10130	• Stem, Valve	1	90216-
4		09281-00041	• Core, Valve	1	90216-
5		09283-00000	• Seat, Valve	1	90216-
6		09285-00000	• Adapter	1	90216-
7		09282-00017	• Cap, Valve	1	90216-

FIG. S0120-015001 Tire (23.5-25-20PR-L2 Tubeless Tires, Bridgestone)

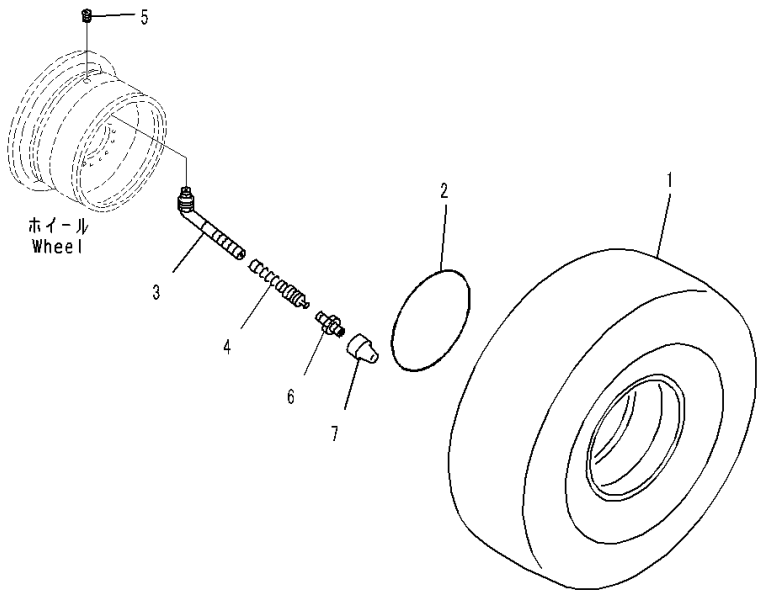

Index	Code	Part Number	Description	Qty	Serial Number
1		424-X26-1130	Tire	4	90216-
2		566-30-11660	• O-ring	1	90216-
		09280-10040	Valve Assembly, Tire	4	90216-
3		09280-10130	• Stem, Valve	1	90216-
4		09281-00041	• Core, Valve	1	90216-
5		09283-00000	• Seat, Valve	1	90216-
6		09285-00000	• Adapter	1	90216-
7		09282-00017	• Cap, Valve	1	90216-

FIG. S0120-011001 Tire (23.5-25-20PR-L3 Tubeless Tires, Toyo)

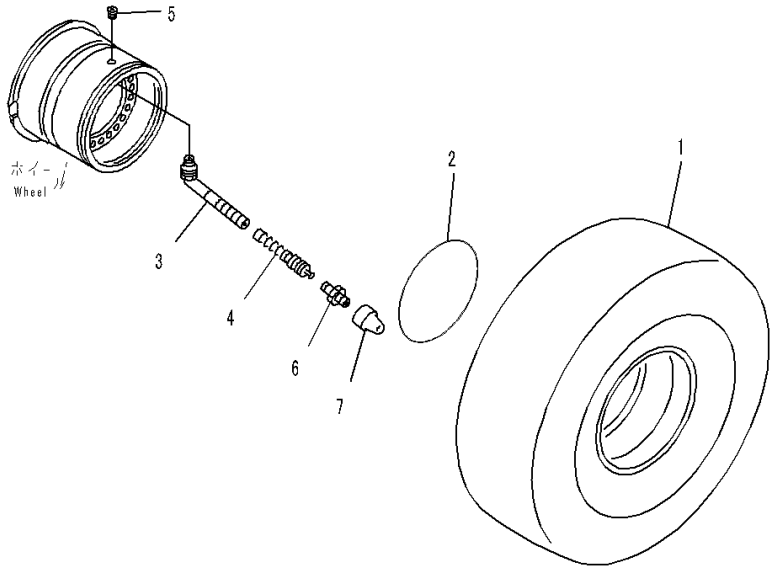

Index	Code	Part Number	Description	Qty	Serial Number
1		424-X27-1150	Tire	4	90216-
2		566-30-11660	• O-ring	1	90216-
		09280-10040	Valve Assembly, Tire	4	90216-
3		09280-10130	• Stem, Valve	1	90216-
4		09281-00041	• Core, Valve	1	90216-
5		09283-00000	• Seat, Valve	1	90216-
6		09285-00000	• Adapter	1	90216-
7		09282-00017	• Cap, Valve	1	90216-

FIG. S0120-012001 Tire (23.5-25-20PR-L3 Tubeless Tires, Yokohama)

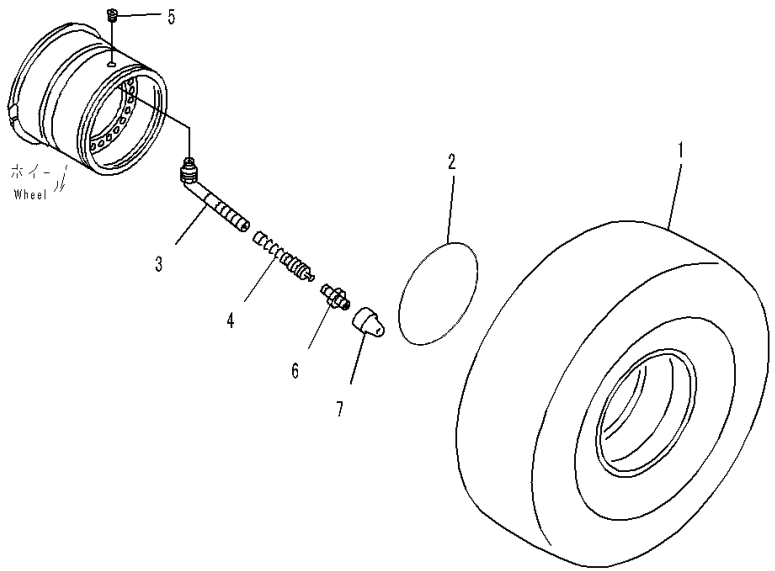

Index	Code	Part Number	Description	Qty	Serial Number
1		424-X27-1170	Tire Assembly	4	90216-
2		566-30-11660	• O-ring	1	90216-
		09280-10040	Valve Assembly, Tire	4	90216-
3		09280-10130	• Stem, Valve	1	90216-
4		09281-00041	• Core, Valve	1	90216-
5		09283-00000	• Seat, Valve	1	90216-
6		09285-00000	• Adapter	1	90216-
7		09282-00017	• Cap, Valve	1	90216-

FIG. S0120-009001 Tire (23.5-25-20PR-L3 Tubeless Tires, Bridgestone)

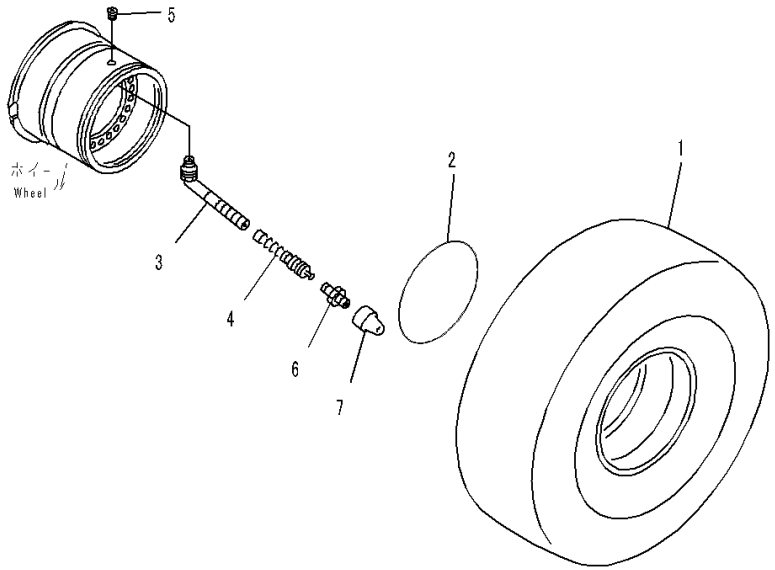

Index	Code	Part Number	Description	Qty	Serial Number
1		424-X27-1130	Tire	4	90216-
2		566-30-11660	• O-ring	1	90216-
		09280-10040	Valve Assembly, Tire	4	90216-
3		09280-10130	• Stem, Valve	1	90216-
4		09281-00041	• Core, Valve	1	90216-
5		09283-00000	• Seat, Valve	1	90216-
6		09285-00000	• Adapter	1	90216-
7		09282-00017	• Cap, Valve	1	90216-

FIG. S0120-008001 Tire (23.5-R25-One Star-L3, Tubeless Tires)

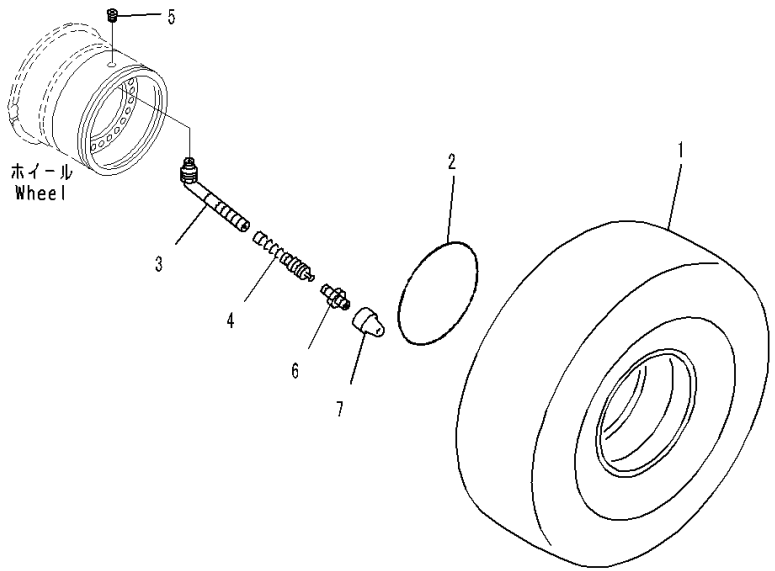

Index	Code	Part Number	Description	Qty	Serial Number
1		421-X83-3110	Tire	4	90216-
2		419-30-11630	O-ring	4	90216-
		09280-10040	Valve Assembly, Tire	4	90216-
3		09280-10130	• Stem, Valve	1	90216-
4		09281-00041	• Core, Valve	1	90216-
5		09283-00000	• Seat, Valve	1	90216-
6		09285-00000	• Adapter	1	90216-
7		09282-00017	• Cap, Valve	1	90216-

FIG. S0120-028001 Tire (26.5-25-16PR-L3 Tubed Tires)

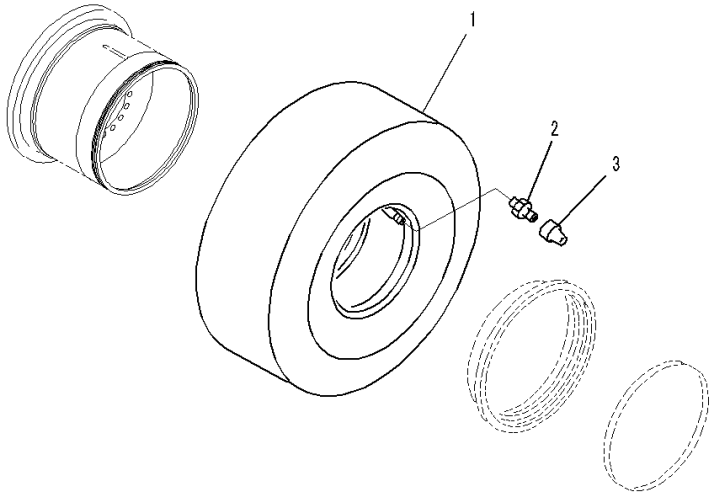

Index	Code	Part Number	Description	Qty	Serial Number
1		421-Y29-1110	Tire Assembly	4	90216-
2		424-30-11420	• Adapter	1	90216-
3		09282-00020	• Cap, Valve	1	90216-

FIG. S0120-013001 Tire (26.5-25-16PR-L3 Tubeless Tires, Toyo)

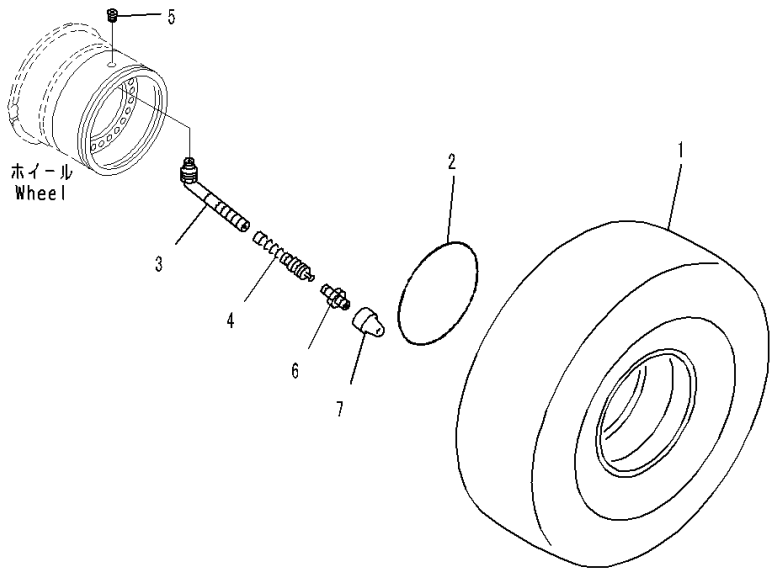

Index	Code	Part Number	Description	Qty	Serial Number
1		421-X29-1130	Tire	4	90216-
2		566-30-11660	• O-ring	1	90216-
		09280-10040	Valve Assembly, Tire	4	90216-
3		09280-10130	• Stem, Valve	1	90216-
4		09281-00041	• Core, Valve	1	90216-
5		09283-00000	• Seat, Valve	1	90216-
6		09285-00000	• Adapter	1	90216-
7		09282-00017	• Cap, Valve	1	90216-

FIG. S0120-014001 Tire (26.5-25-16PR-L3 Tubeless Tires, Yokohama)

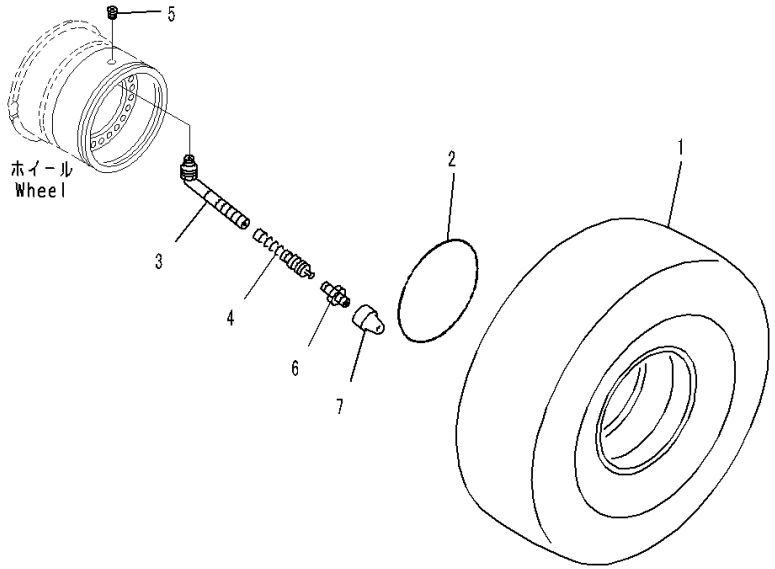

Index	Code	Part Number	Description	Qty	Serial Number
1		421-X29-1150	Tire	4	90216-
2		566-30-11660	• O-ring	1	90216-
		09280-10040	Valve Assembly, Tire	4	90216-
3		09280-10130	• Stem, Valve	1	90216-
4		09281-00041	• Core, Valve	1	90216-
5		09283-00000	• Seat, Valve	1	90216-
6		09285-00000	• Adapter	1	90216-
7		09282-00017	• Cap, Valve	1	90216-

FIG. S0120-010001 Tire (26.5-25-16PR-L3 Tubeless Tires, Bridgestone)

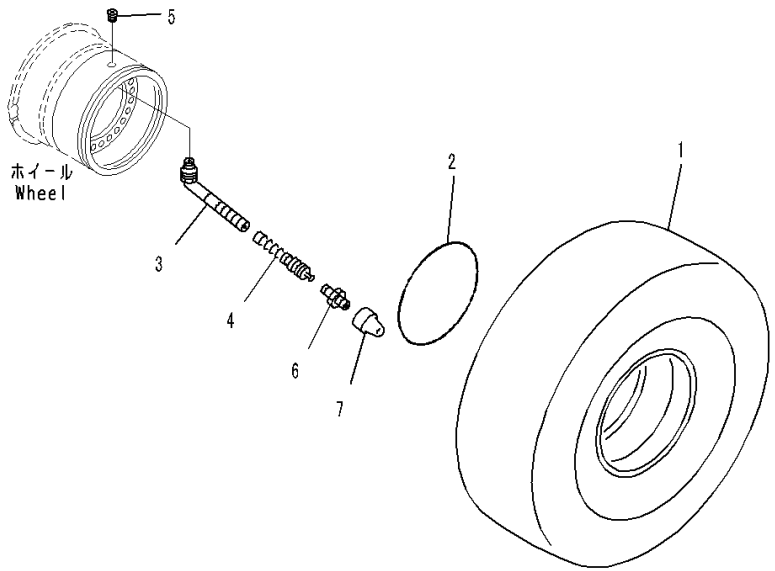

Index	Code	Part Number	Description	Qty	Serial Number
1		421-X29-1110	Tire Assembly	4	90216-
2		566-30-11660	• O-ring	1	90216-
		09280-10040	Valve Assembly, Tire	4	90216-
3		09280-10130	• Stem, Valve	1	90216-
4		09281-00041	• Core, Valve	1	90216-
5		09283-00000	• Seat, Valve	1	90216-
6		09285-00000	• Adapter	1	90216-
7		09282-00017	• Cap, Valve	1	90216-

FIG. S0120-018001 Tire (26.5-25-20PR-L3 Tubeless Tires, Toyo)

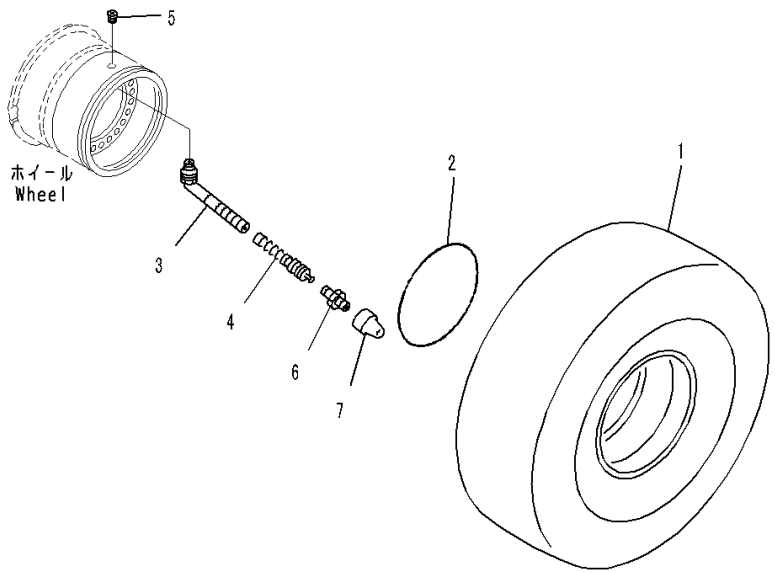

Index	Code	Part Number	Description	Qty	Serial Number
1		424-X31-1120	Tire	4	90216-
2		566-30-11660	• O-ring	1	90216-
		09280-10040	Valve Assembly, Tire	4	90216-
3		09280-10130	• Stem, Valve	1	90216-
4		09281-00041	• Core, Valve	1	90216-
5		09283-00000	• Seat, Valve	1	90216-
6		09285-00000	• Adapter	1	90216-
7		09282-00017	• Cap, Valve	1	90216-

FIG. S0120-029001 Tire (26.5-25-20PR-L3 Tubeless Tires, Bridgestone)

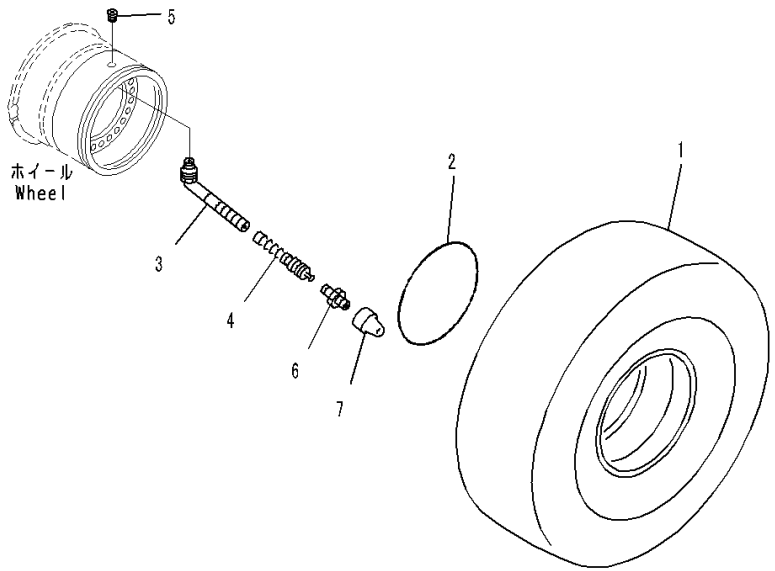

Index	Code	Part Number	Description	Qty	Serial Number
1		425-30-11120	Tire Assembly	4	90216-
2		566-30-11660	• O-ring	1	90216-
		09280-10040	Valve Assembly, Tire	4	90216-
3		09280-10130	• Stem, Valve	1	90216-
4		09281-00041	• Core, Valve	1	90216-
5		09283-00000	• Seat, Valve	1	90216-
6		09285-00000	• Adapter	1	90216-
7		09282-00017	• Cap, Valve	1	90216-

FIG. S0120-022001 Tire (26.5-25-20PR-L4 Tubeless Tires, Toyo)

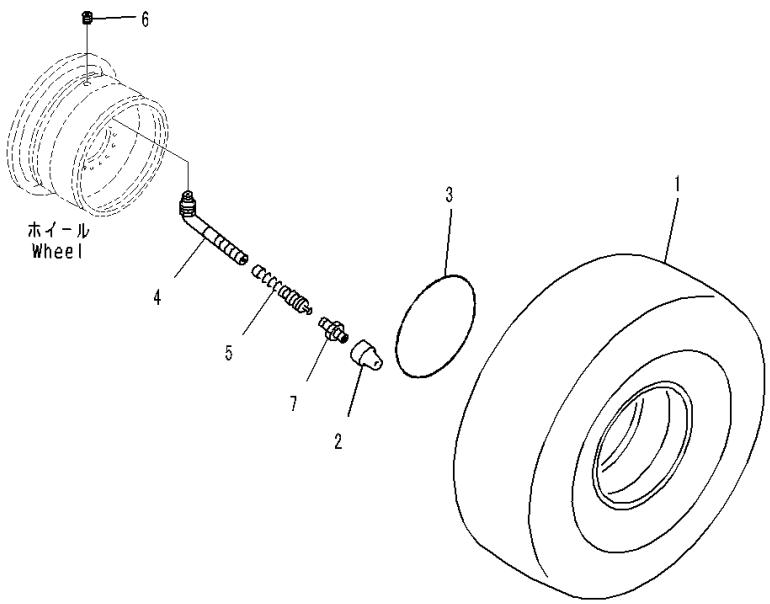

Index	Code	Part Number	Description	Qty	Serial Number
1		425-X59-1120	Tire	4	90216-
2		09282-00020	• Cap, Valve	1	90216-
3		566-30-11660	• O-ring	1	90216-
4		09280-10130	• Stem	1	90216-
5		09281-00041	• Core, Valve	1	90216-
6		09283-00000	• Seat, Valve	1	90216-
7		09285-00000	• Adapter	1	90216-

FIG. S0120-023001 Tire (26.5-25-20PR-L4 Tubeless Tires, Yokohama)

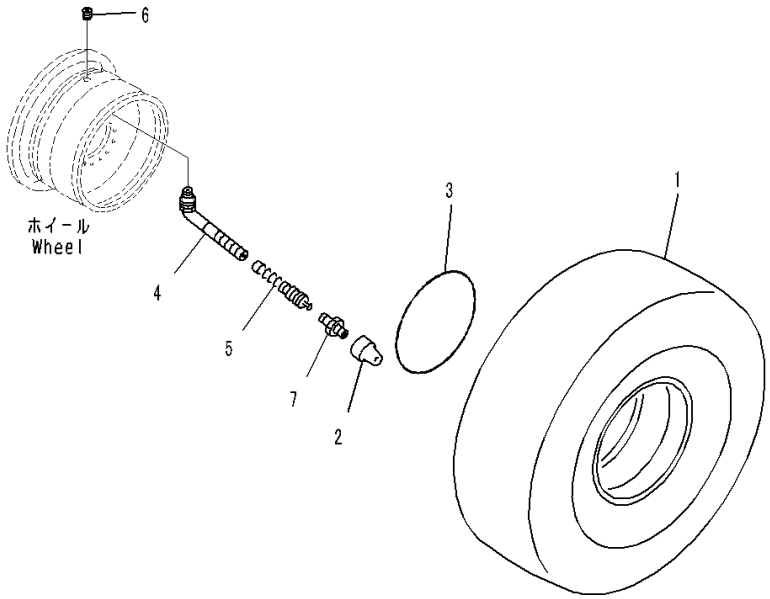

Index	Code	Part Number	Description	Qty	Serial Number
1		425-X59-1130	Tire	4	90216-
2		09282-00020	• Cap, Valve	1	90216-
3		566-30-11660	• O-ring	1	90216-
4		09280-10130	• Stem	1	90216-
5		09281-00041	• Core, Valve	1	90216-
6		09283-00000	• Seat, Valve	1	90216-
7		09285-00000	• Adapter	1	90216-

FIG. S0120-021001 Tire (26.5-25-20PR-L4 Tubeless Tires, Bridgestone)

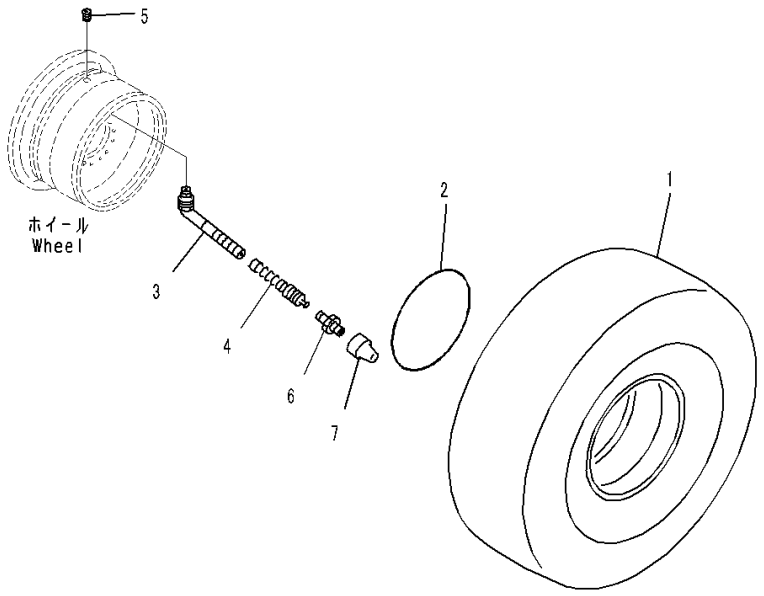

Index	Code	Part Number	Description	Qty	Serial Number
1		425-X59-1110	Tire Assembly	4	90216-
2		566-30-11660	• O-ring	1	90216-
		09280-10040	Valve Assembly, Tire	4	90216-
3		09280-10130	• Stem, Valve	1	90216-
4		09281-00041	• Core, Valve	1	90216-
5		09283-00000	• Seat, Valve	1	90216-
6		09285-00000	• Adapter	1	90216-
7		09282-00017	• Cap, Valve	1	90216-

FIG. S0120-027001 Tire (26.5-25-20PR-L5 Tubeless Tires)

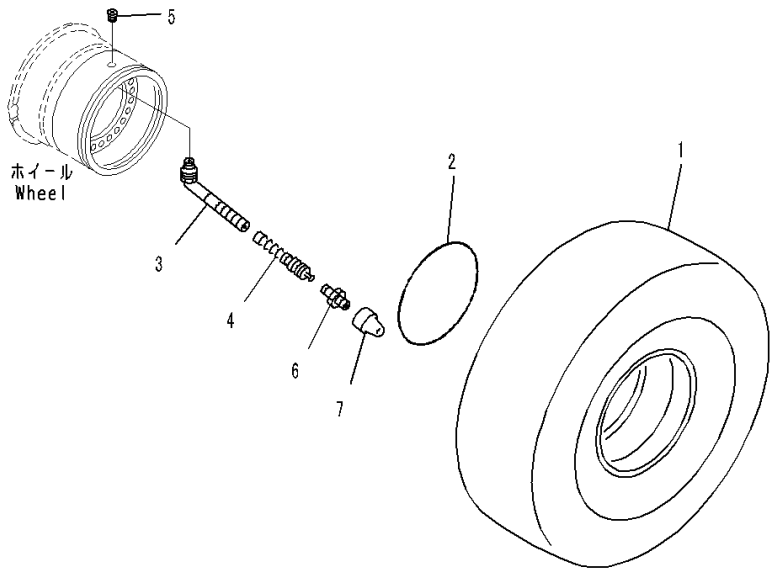

Index	Code	Part Number	Description	Qty	Serial Number
1		425-X69-1110	Tire	4	90216-
2		566-30-11660	• O-ring	1	90216-
		09280-10040	Valve Assembly, Tire	4	90216-
3		09280-10130	• Stem, Valve	1	90216-
4		09281-00041	• Core, Valve	1	90216-
5		09283-00000	• Seat, Valve	1	90216-
6		09285-00000	• Adapter	1	90216-
7		09282-00017	• Cap, Valve	1	90216-

FIG. S0120-020001 Tire (23.5-25-24PR-L3 Tubeless Tires)

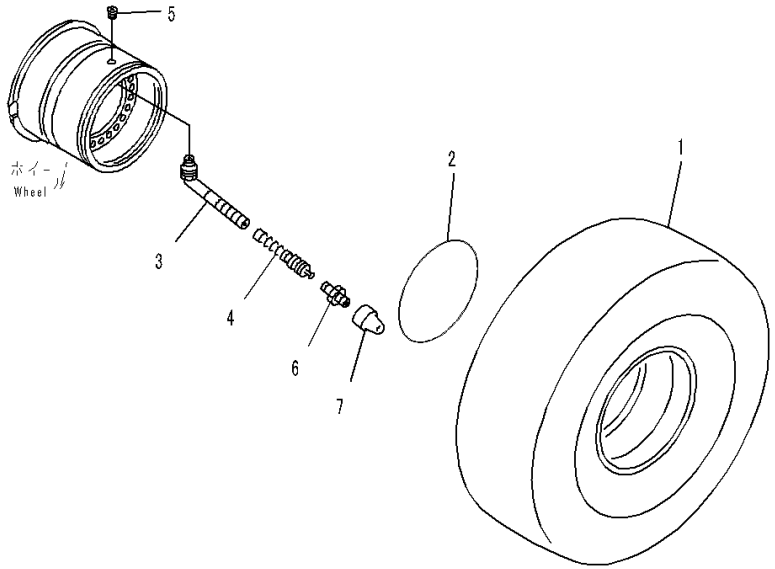

Index	Code	Part Number	Description	Qty	Serial Number
1		421-X58-1110	Tire	4	90216-
2		566-30-11660	• O-ring	1	90216-
		09280-10040	Valve Assembly, Tire	4	90216-
3		09280-10130	• Stem, Valve	1	90216-
4		09281-00041	• Core, Valve	1	90216-
5		09283-00000	• Seat, Valve	1	90216-
6		09285-00000	• Adapter	1	90216-
7		09282-00017	• Cap, Valve	1	90216-

FIG. S0120-002001 Tire (26.5-25-24PR-L3 Tubeless Tires, Toyo)

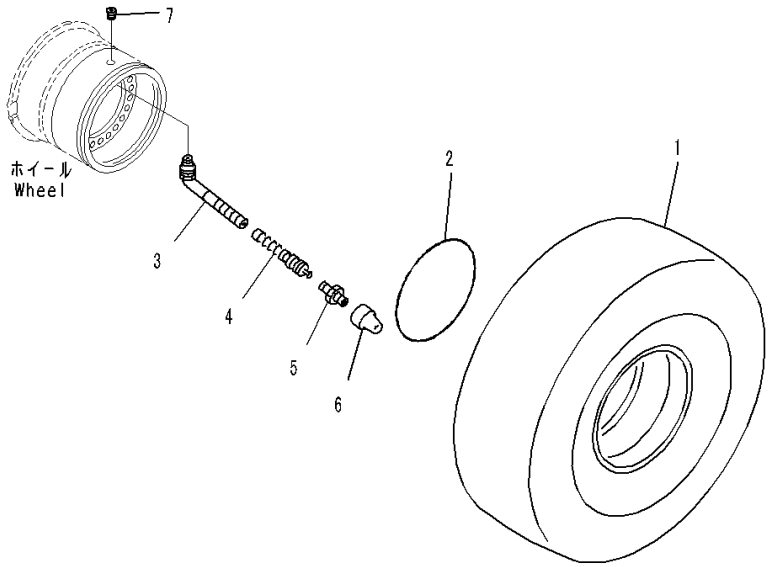

Index	Code	Part Number	Description	Qty	Serial Number
1		425-X70-1210	Tire	4	90216-
2		566-30-11660	• O-ring	1	90216-
3		09280-10130	• Stem, Valve	1	90216-
4		09281-00041	• Core, Valve	1	90216-
5		09285-00000	• Adapter	1	90216-
6		09282-00017	• Cap, Valve	1	90216-
7		09283-00000	• Seat, Valve	1	90216-

FIG. S0120-001001 Tire (26.5-25-24PR-L3 Tubeless Tires, Bridgestone)

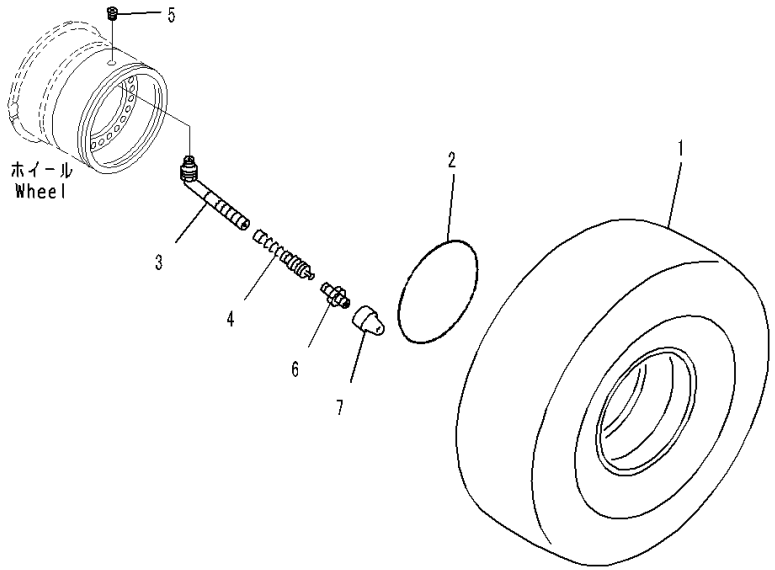

Index	Code	Part Number	Description	Qty	Serial Number
1		425-X70-1110	Tire Assembly	4	90216-
2		566-30-11660	• O-ring	1	90216-
		09280-10040	Valve Assembly, Tire	4	90216-
3		09280-10130	• Stem, Valve	1	90216-
4		09281-00041	• Core, Valve	1	90216-
5		09283-00000	• Seat, Valve	1	90216-
6		09285-00000	• Adapter	1	90216-
7		09282-00017	• Cap, Valve	1	90216-

FIG. S0120-006001 Tire (26.5-R25-One Star-L3, Tubeless Tires)

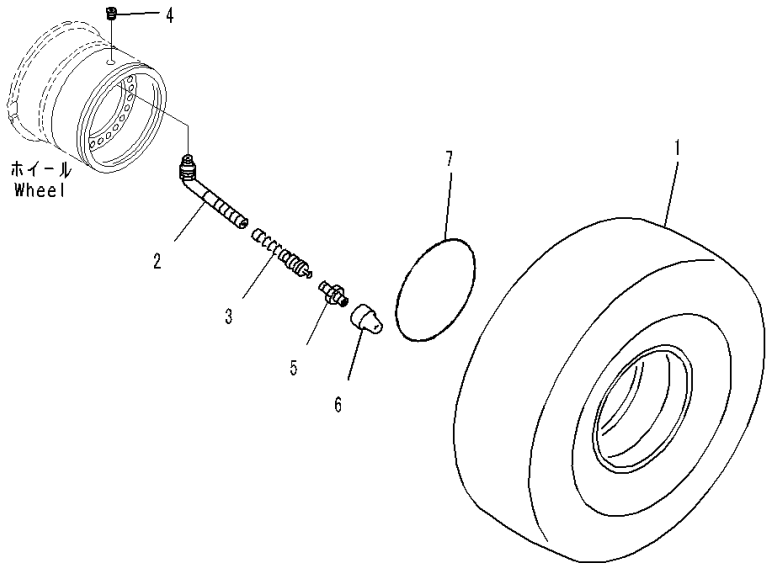

Index	Code	Part Number	Description	Qty	Serial Number
1		421-X55-3110	Tire	4	90216-
		09280-10040	Valve Assembly, Tire	4	90216-
2		09280-10130	• Stem, Valve	1	90216-
3		09281-00041	• Core, Valve	1	90216-
4		09283-00000	• Seat, Valve	1	90216-
5		09285-00000	• Adapter	1	90216-
6		09282-00017	• Cap, Valve	1	90216-
7		566-30-11660	O-ring	4	90216-

FIG. S0120-003001 Tire (26.5-R25-One Star-L3, Tubeless Tires, XHA)

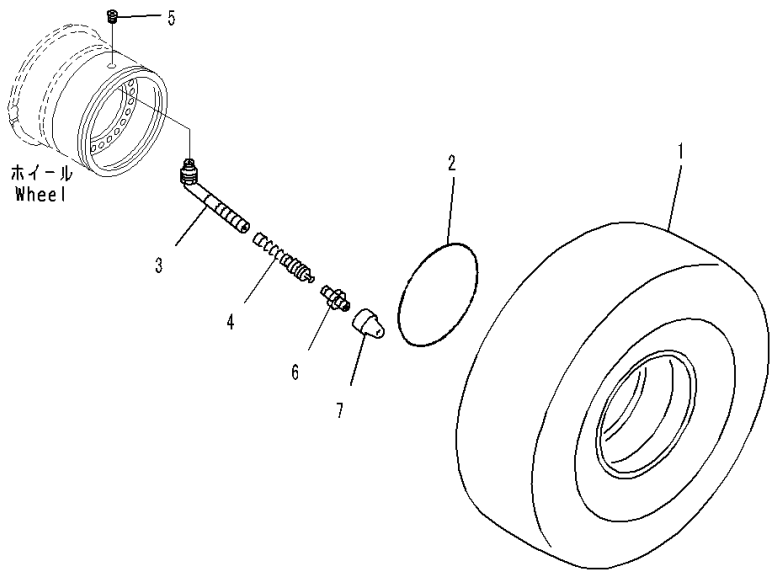

Index	Code	Part Number	Description	Qty	Serial Number
1		421-X84-2111	Tire	4	90299-
2		566-30-11660	• O-ring	1	90216-
		09280-10040	Valve Assembly, Tire	4	90216-
3		09280-10130	• Stem, Valve	1	90216-
4		09281-00041	• Core, Valve	1	90216-
5		09283-00000	• Seat, Valve	1	90216-
6		09285-00000	• Adapter	1	90216-
7		09282-00017	• Cap, Valve	1	90216-

FIG. S0120-007001 Tire (26.5-R25-One Star-L3, Tubeless Tires, VMT)

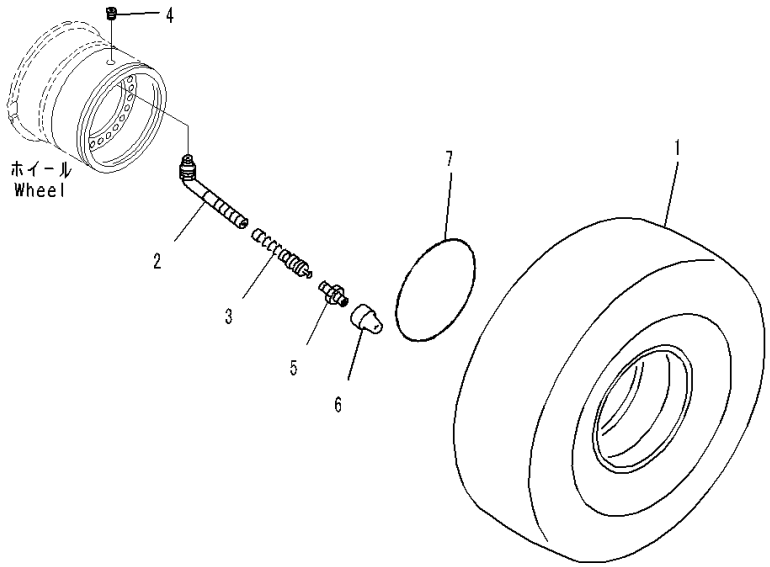

Index	Code	Part Number	Description	Qty	Serial Number
1		421-X55-3120	Tire	4	90216-
		09280-10040	Valve Assembly, Tire	4	90216-
2		09280-10130	• Stem, Valve	1	90216-
3		09281-00041	• Core, Valve	1	90216-
4		09283-00000	• Seat, Valve	1	90216-
5		09285-00000	• Adapter	1	90216-
6		09282-00017	• Cap, Valve	1	90216-
7		566-30-11660	O-ring	4	90216-

FIG. S0120-005001 Tire (26.5-R25-Multi Star-L4 Tubeless Tires VSNTZ)

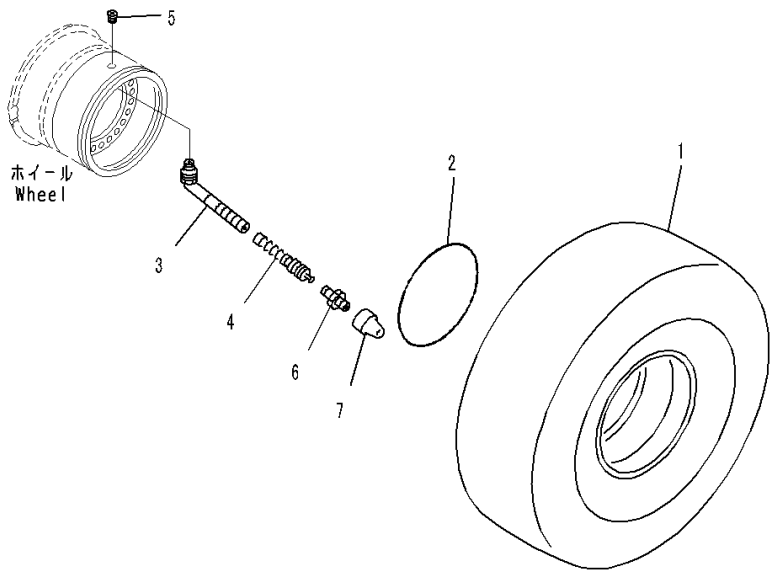

Index	Code	Part Number	Description	Qty	Serial Number
1		421-X85-4110	Tire	4	90216-
2		566-30-11660	• O-ring	1	90216-
		09280-10040	Valve Assembly, Tire	4	90216-
3		09280-10130	• Stem, Valve	1	90216-
4		09281-00041	• Core, Valve	1	90216-
5		09283-00000	• Seat, Valve	1	90216-
6		09285-00000	• Adapter	1	90216-
7		09282-00017	• Cap, Valve	1	90216-

WORK EQUIPMENT

FIG. T4110-004001 Lift Arm and Bell Crank (With 2-Spool Control Valve) (Boom, Bell Crank and Link)

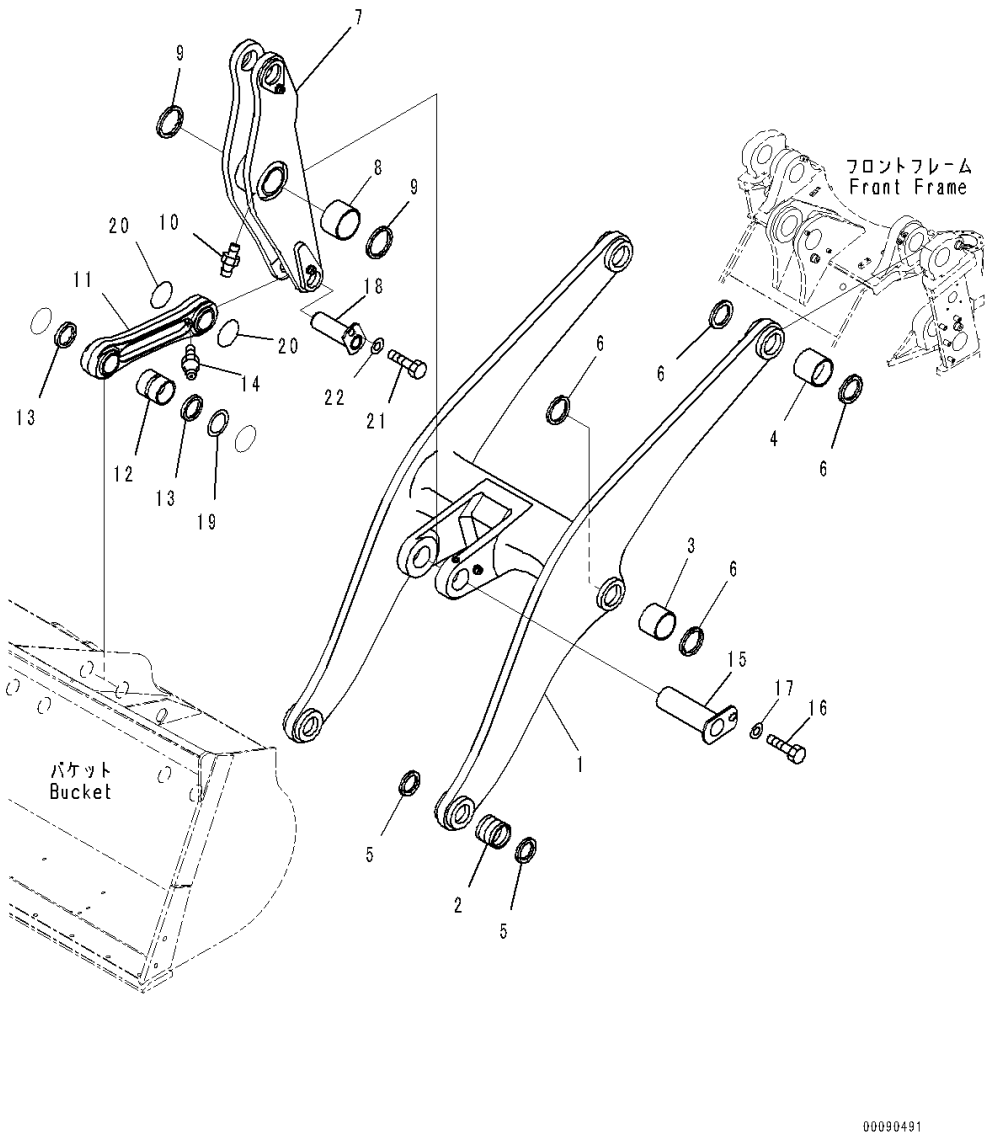

Index	Code	Part Number	Description	Qty	Serial Number
		421-70-31202	Boom Assembly	1	90216-
1	C1		• Boom	1	90216-
2		421-70-21240	• Bushing	2	90216-
3		421-70-11381	• Bushing	2	90216-
4		421-70-11261	• Bushing	2	90216-
5		421-09-11310	• Seal, Dust	4	90216-
6		421-09-11320	• Seal, Dust	8	90216-
		421-70-41500	Bell Crank Assembly	1	90216-
7	C1		• Bell Crank	1	90216-
8		421-70-11272	• Bushing	2	90216-
9		421-09-11330	• Seal, Dust	2	90216-
10		07020-00000	• Fitting, Grease	1	90216-
		421-70-00082	Link Assembly	1	90216-
11	C1		• Link	1	90216-
12		421-70-11251	• Bushing	2	90216-
13		421-09-11310	• Seal, Dust	4	90216-
14		07020-00000	• Fitting, Grease	2	90216-
15		421-70-11961	Pin	1	90216-
16		01010-81630	Bolt	1	90216-
17		421-70-11280	Washer	1	90216-
18		421-70-41920	Pin	1	90216-
19		423-70-41970	Shim, T=1.0mm	1	90216-
		421-70-11442	Shim, T=3.0mm	1	90216-
20		423-70-11210	O-ring	2	90216-
21		01010-81630	Bolt	1	90216-
22		421-70-11280	Washer	1	90216-

FIG. T4110-004002 Lift Arm and Bell Crank (Pin)

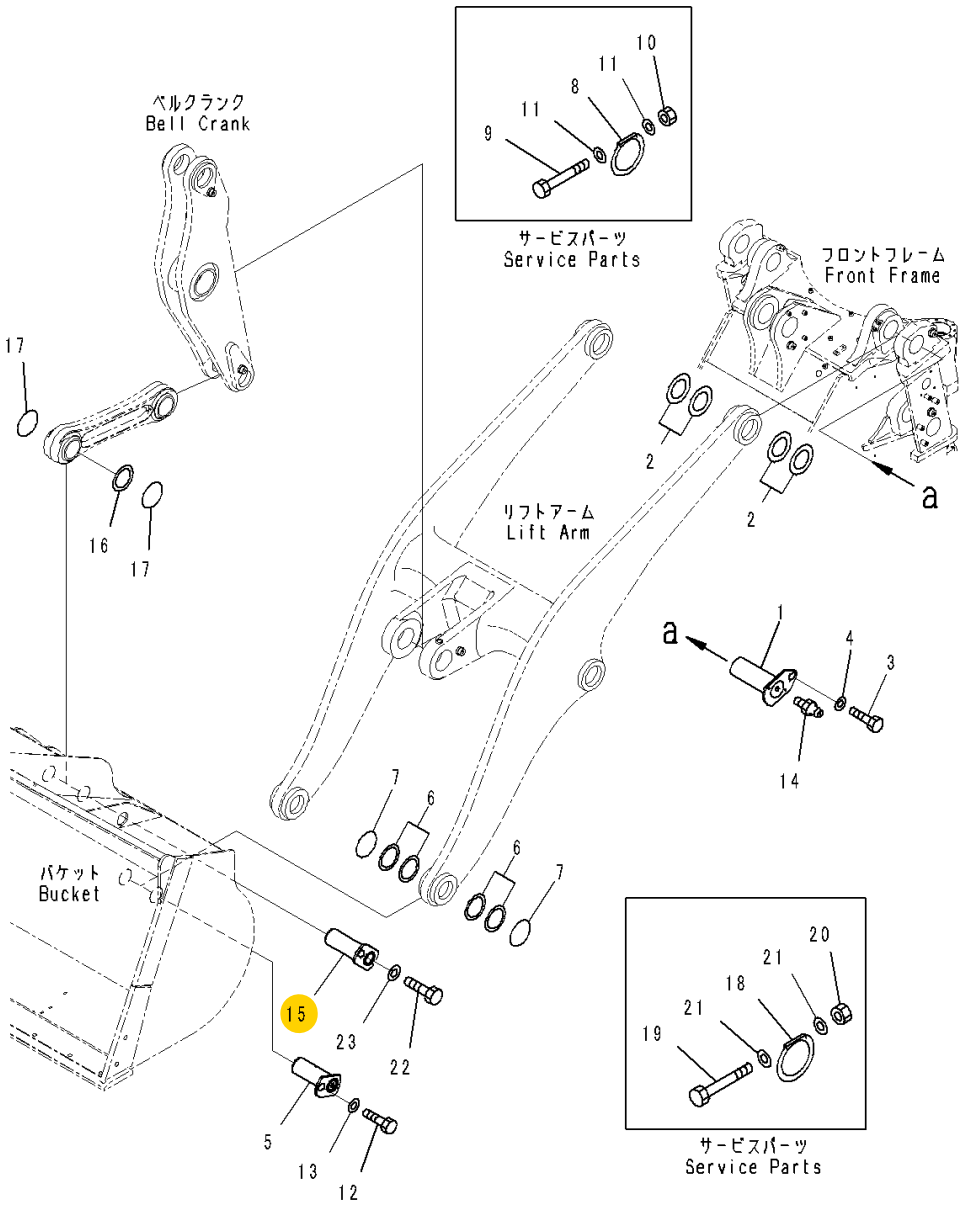

Index	Code	Part Number	Description	Qty	Serial Number
		Note: This list covers following specifications.			
		With 2-Spool Control Valve			
		With 2-Spool Control Valve, Auto-greasing System			
		With 2-Spool Control Valve, Load Meter			
		With 3-Spool Control Valve			
		With 3-Spool Control Valve, Auto-greasing System			
		With Remote Greasing, Rear Axle, Steering Cylinder, Work Equipment			
1		421-70-31950	Pin	2	90216-
2		421-70-11471	Shim, T=1.5mm	2	90216-
		421-70-11481	Shim, T=3.0mm	2	90216-
		421-70-11331	Shim, T=1.0mm	2	90216-
3		01010-81630	Bolt	2	90216-
4		421-70-11280	Washer	2	90216-
5		421-70-41910	Pin	2	90216-
6		423-70-41970	Shim, T=1.0mm	4	90216-
		421-70-11442	Shim, T=3.0mm	2	90216-
7		423-70-11210	O-ring	4	90216-
8		421-70-11410	O-ring, Service Use Only	4	90216-
9		236-46-13620	Bolt, Service Use Only	4	90216-
10		01596-00606	Nut, Service Use Only	4	90216-
11		01641-20608	Washer, Service Use Only	8	90216-
12		01010-81630	Bolt	2	90216-
13		421-70-11280	Washer	2	90216-
14		07020-00000	Fitting, Grease	2	90216-
15		421-70-41920	Pin	1	90216-
16		423-70-41970	Shim, T=1.0mm	1	90216-
		421-70-11442	Shim, T=3.0mm	1	90216-
17		423-70-11210	O-ring	2	90216-
18		421-70-11410	O-ring, Service Use Only	4	90216-
19		236-46-13620	Bolt, Service Use Only	4	90216-
20		01596-00606	Nut, Service Use Only	4	90216-
21		01641-20608	Washer, Service Use Only	8	90216-
22		01010-81630	Bolt	1	90216-
23		421-70-11280	Washer	1	90216-

FIG. T4110-004003 Lift Arm and Bell Crank (Boom Kick-out)

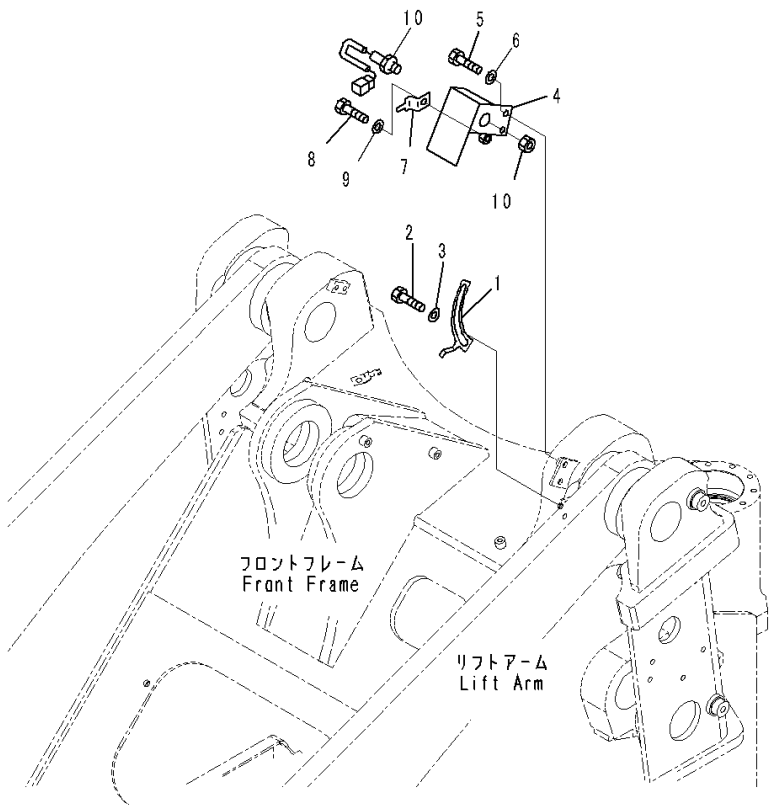

Index	Code	Part Number	Description	Qty	Serial Number
		Note: This list covers following specifications.			
		With 2-Spool Control Valve			
		With 2-Spool Control Valve, Auto-greasing System			
		With 2-Spool Control Valve, Load Meter			
		With 3-Spool Control Valve			
		With 3-Spool Control Valve, Auto-greasing System			
		With Remote Greasing, Rear Axle, Steering Cylinder, Work Equipment			
1		421-43-19131	Plate	1	90216-
2		01010-81220	Bolt	2	90216-
3		01643-31232	Washer	2	90216-
4		421-43-19140	Plate	1	90216-
5		01010-81225	Bolt	2	90216-
6		01643-31232	Washer	2	90216-
7		08193-20010	Clip	1	90216-
8		01010-81016	Bolt	1	90216-
9		01643-31032	Washer	1	90216-
10		56B-06-15610	Switch, Proximity	1	90216-

FIG. T4110-001001 Lift Arm and Bell Crank (Boom, Bell Crank and Link)

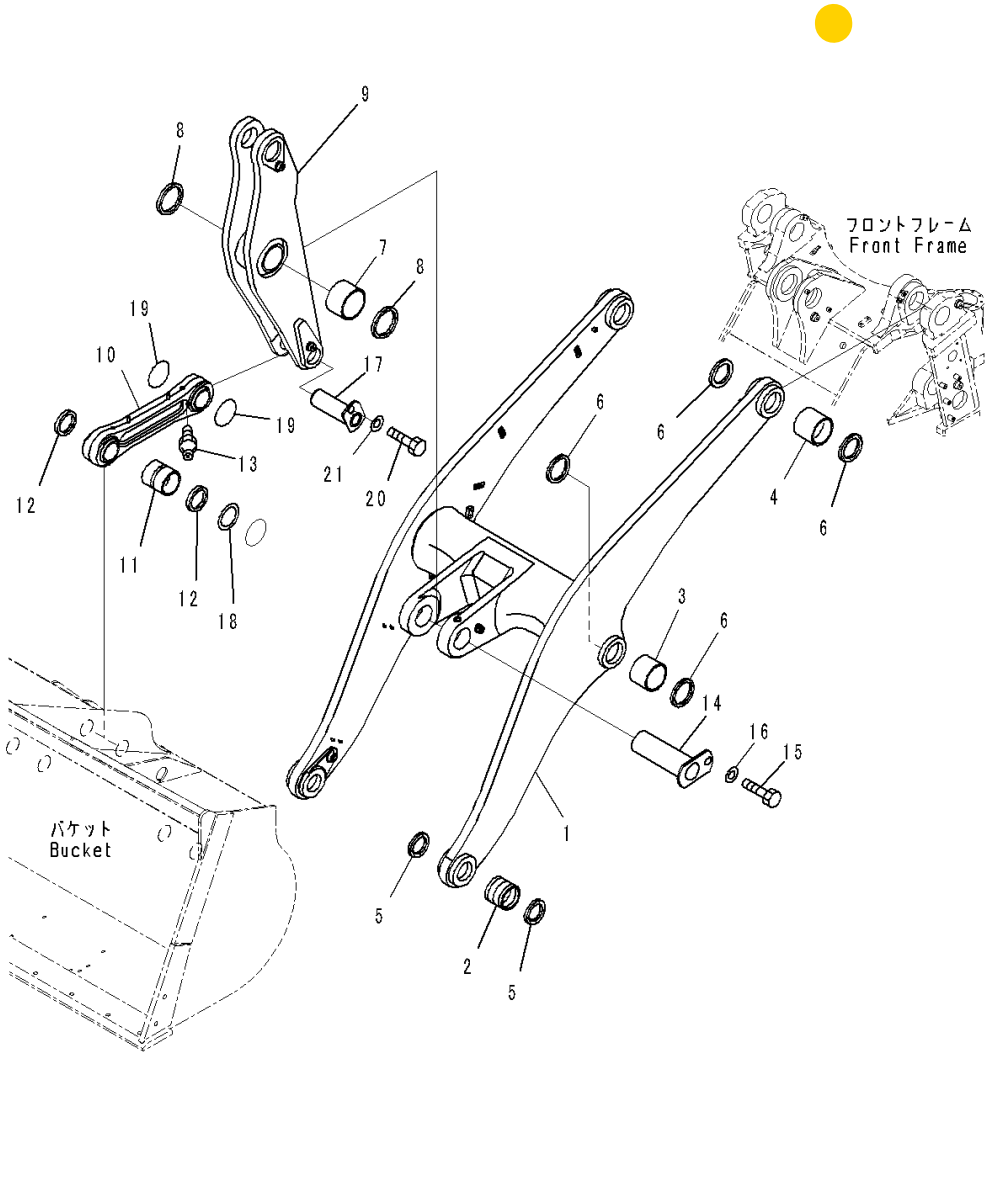

Index	Code	Part Number	Description	Qty	Serial Number
		Note: This list covers following specifications.			
		With 2-Spool Control Valve, Auto-greasing System			
		With 3-Spool Control Valve, Auto-greasing System			
		421-S95-7100	Boom Assembly	1	90216-
1	C1		• Boom	1	90216-
2		421-70-21240	• Bushing	2	90216-
3		421-70-11381	• Bushing	2	90216-
4		421-70-11261	• Bushing	2	90216-
5		421-09-11310	• Seal, Dust	4	90216-
6		421-09-11320	• Seal, Dust	8	90216-
		421-S95-7200	Bell Crank Assembly	1	90216-
7		421-70-11272	• Bushing	2	90216-
8		421-09-11330	• Seal, Dust	2	90216-
9	C1		• Bell Crank	1	90216-
		421-S95-7500	Link Assembly	1	90216-
10	C1		• Link	1	90216-
11		421-70-11251	• Bushing	2	90216-
12		421-09-11310	• Seal, Dust	4	90216-
13		07020-00000	• Fitting, Grease	2	90216-
14		421-70-11961	Pin	1	90216-
15		01010-81630	Bolt	1	90216-
16		421-70-11280	Washer	1	90216-
17		421-70-41920	Pin	1	90216-
18		423-70-41970	Shim, T=1.0mm	1	90216-
		421-70-11442	Shim, T=3.0mm	1	90216-
19		423-70-11210	O-ring	2	90216-
20		01010-81630	Bolt	1	90216-
21		421-70-11280	Washer	1	90216-

FIG. T4110-005001 Lift Arm and Bell Crank (Boom, Bell Crank and Link)

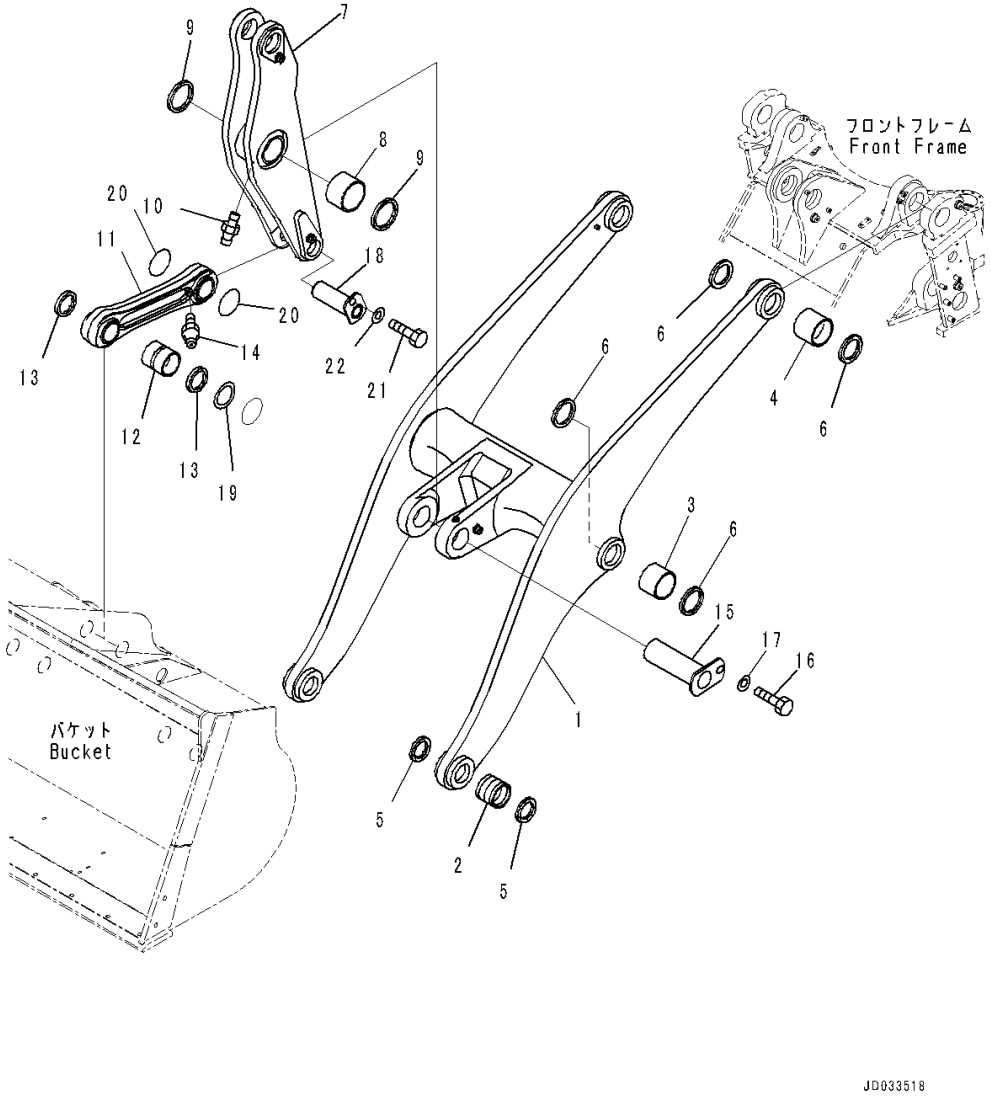

Index	Code	Part Number	Description	Qty	Serial Number
		Note: This list covers following specifications.			
		With 2-Spool Control Valve, Load Meter			
		With 3-Spool Control Valve			
		421-U94-3630	Boom Assembly	1	90216-
			With 2-Spool Control Valve, Load Meter		
		421-877-4640	Boom Assembly	1	90216-
			With 3-Spool Control Valve		
1	C1		• Boom	1	90216-
2		421-70-21240	• Bushing	2	90216-
3		421-70-11381	• Bushing	2	90216-
4		421-70-11261	• Bushing	2	90216-
5		421-09-11310	• Seal, Dust	4	90216-
6		421-09-11320	• Seal, Dust	8	90216-
		421-70-41500	Bell Crank Assembly	1	90216-
7	C1		• Bell Crank	1	90216-
8		421-70-11272	• Bushing	2	90216-
9		421-09-11330	• Seal, Dust	2	90216-
10		07020-00000	• Fitting, Grease	1	90216-
		421-70-00082	Link Assembly	1	90216-
11	C1		• Link	1	90216-
12		421-70-11251	• Bushing	2	90216-
13		421-09-11310	• Seal, Dust	4	90216-
14		07020-00000	• Fitting, Grease	2	90216-
15		421-70-11961	Pin	1	90216-
16		01010-81630	Bolt	1	90216-
17		421-70-11280	Washer	1	90216-
18		421-70-41920	Pin	1	90216-
19		423-70-41970	Shim, T=1.0mm	1	90216-
		421-70-11442	Shim, T=3.0mm	1	90216-
20		423-70-11210	O-ring	2	90216-
21		01010-81630	Bolt	1	90216-
22		421-70-11280	Washer	1	90216-

FIG. T4110-006004 Lift Arm and Bell Crank (Boom Piping)

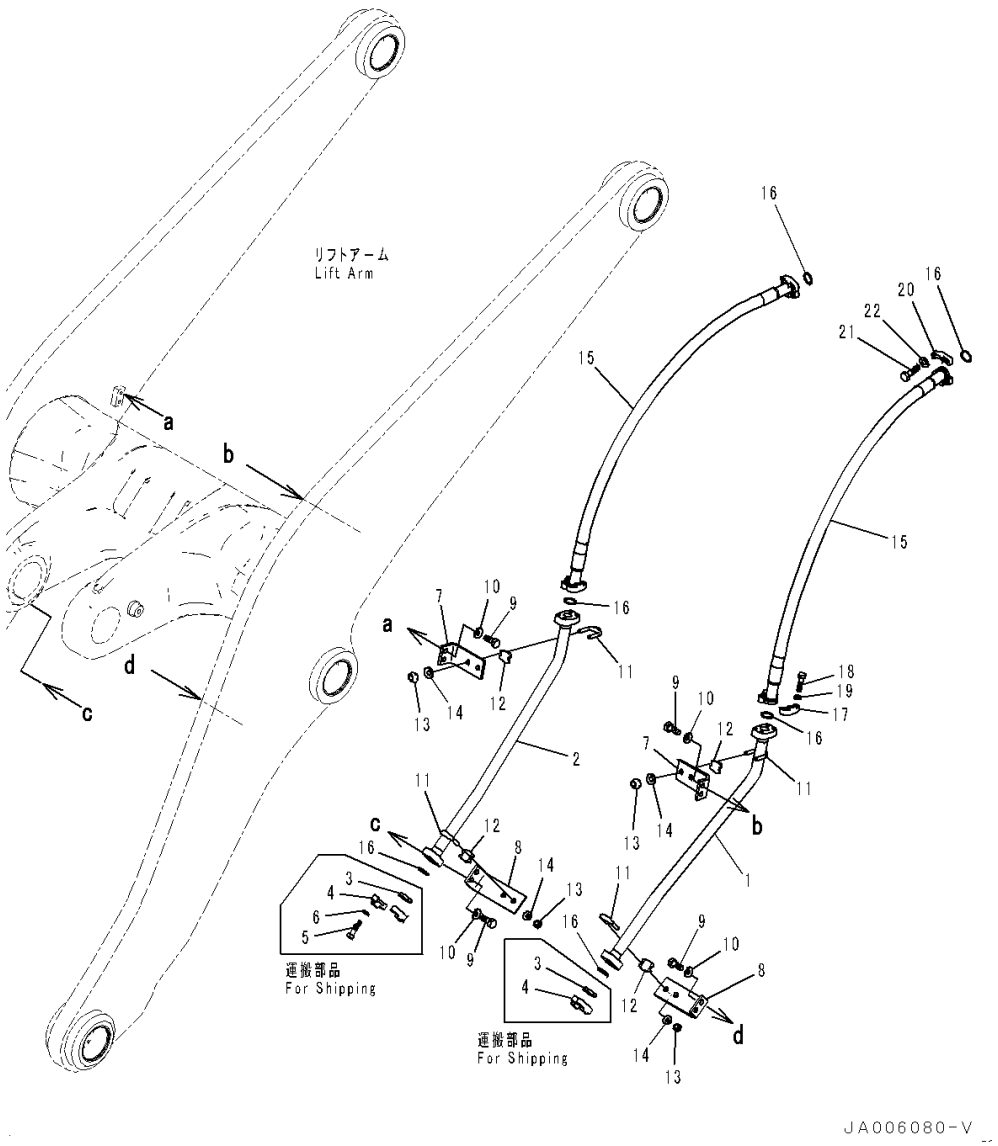

Index	Code	Part Number	Description	Qty	Serial Number
		Note: This list covers following specifications.			
		With 3-Spool Control Valve			
		With 3-Spool Control Valve, Auto-greasing System			
1		421-877-3330	Tube, L.H.	1	90216-
2		421-877-3340	Tube, R.H.	1	90216-
3		07378-11000	Head	2	90216-
4		07371-31049	Flange, Split	4	90216-
5		07372-21035	Bolt	8	90216-
6		01643-51032	Washer	8	90216-
7		421-877-1190	Plate	2	90216-
8		421-877-1210	Plate	2	90216-
9		01010-81230	Bolt	8	90216-
10		01643-51232	Washer	8	90216-
11		07283-33450	Clip	4	90216-
12		07283-53444	Seat	4	90216-
13		01597-01009	Nut	8	90216-
14		01643-31032	Washer	8	90216-
15		07125-01014	Hose, Flange Type	2	90216-
16		07000-13032	O-ring	6	90216-
17		07371-31049	Flange, Split	4	90216-
18		07372-21035	Bolt	8	90216-
19		01643-51032	Washer	8	90216-
20		07371-31049	Flange, Split	4	90371-
21		07372-21035	Bolt	8	90371-
22		01643-51032	Washer	8	90371-

FIG. T4110-015001 Lift Arm and Bell Crank (With Remote Greasing, Rear Axle, Steering Cylinder, Work Equipment) (Boom, Bell Crank and Link)

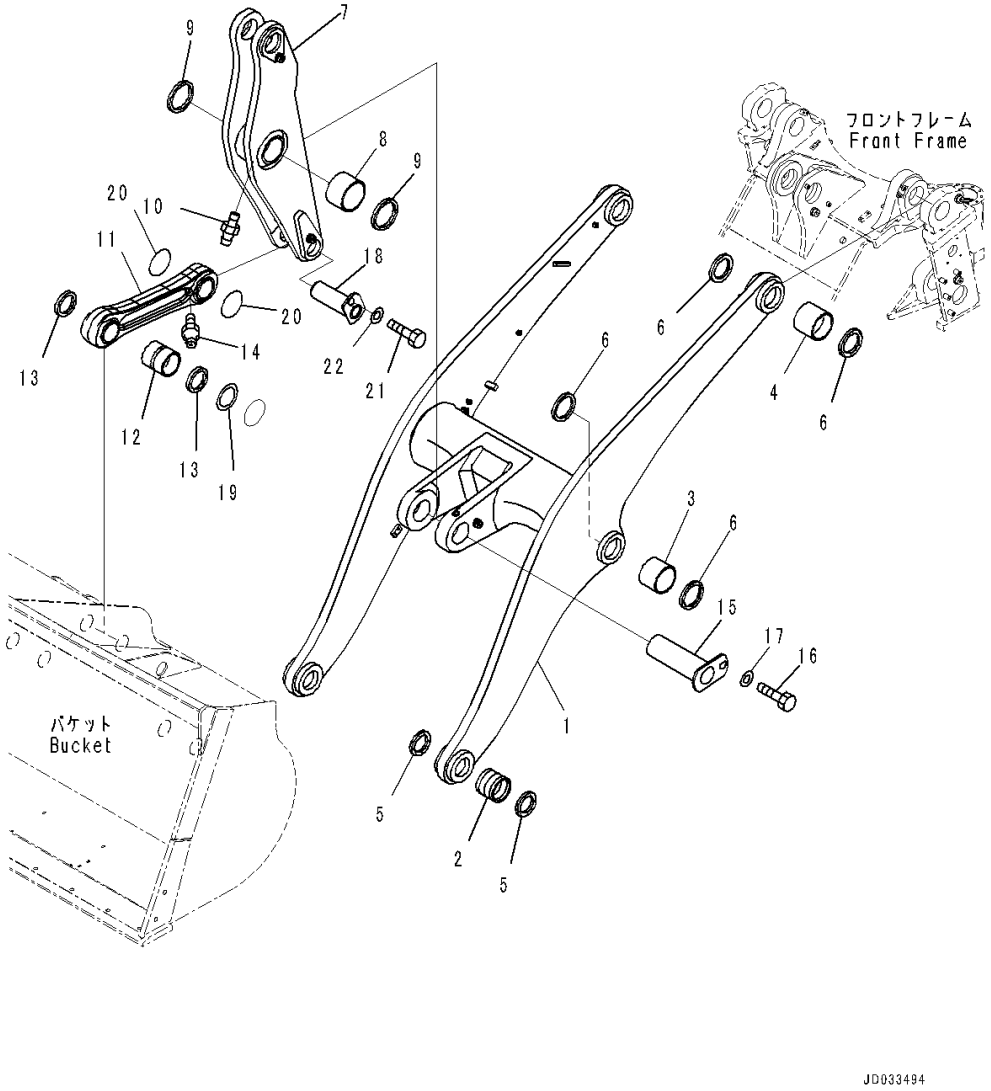

Index	Code	Part Number	Description	Qty	Serial Number
		421-46-46340	Boom Assembly	1	90216-
1	C1		• Boom	1	90216-
2		421-70-21240	• Bushing	2	90216-
3		421-70-11381	• Bushing	2	90216-
4		421-70-11261	• Bushing	2	90216-
5		421-09-11310	• Seal, Dust	4	90216-
6		421-09-11320	• Seal, Dust	8	90216-
		421-46-46290	Bell Crank Assembly	1	90216-
7	C1		• Bell Crank Assembly	1	90216-
8		421-70-11272	• • Bushing	2	90216-
9		421-09-11330	• • Seal, Dust	2	90216-
10		07020-00000	• • Fitting, Grease	1	90216-
		421-70-00082	Link Assembly	1	90216-
11	C1		• Link	1	90216-
12		421-70-11251	• Bushing	2	90216-
13		421-09-11310	• Seal, Dust	4	90216-
14		07020-00000	• Fitting, Grease	2	90216-
15		421-70-11961	Pin	1	90216-
16		01010-81630	Bolt	1	90216-
17		421-70-11280	Washer	1	90216-
18		421-70-41920	Pin	1	90216-
19		423-70-41970	Shim, T=1.0mm	1	90216-
		421-70-11442	Shim, T=3.0mm	1	90216-
20		423-70-11210	O-ring	2	90216-
21		01010-81630	Bolt	1	90216-
22		421-70-11280	Washer	1	90216-

FIG. T4120-001001 Bucket (Bolt On Cutting Edge 4.65m3, 3170mm Width, Loose Material)

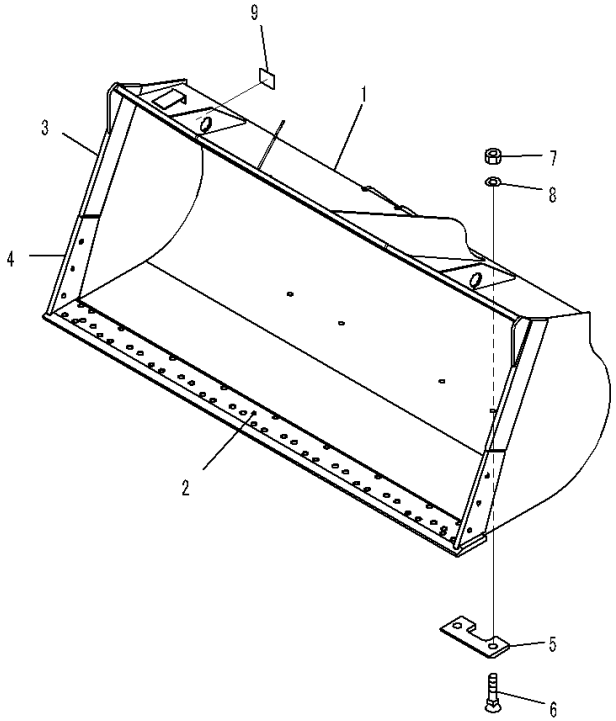

JD033999

Index	Code	Part Number	Description	Qty	Serial Number
		421-70-42611	Bucket Assembly	1	90216-
1		421-70-42620	• Bucket	1	90216-
2		421-70-32920	• • Edge, Welded	1	90216-
3		421-70-42630	• • Plate, Welded	2	90216-
4		421-70-42930	• • Plate, Welded	2	90216-
5		421-70-22140	• Plate	2	90216-
6		02090-11685	• Bolt	4	90216-
7		02290-11625	• Nut	4	90216-
8		01643-22460	• Washer	4	90216-
9	C2	421-70-40110	• Plate, Name (Limited Supply)	1	90216-

FIG. T4120-021001 Bucket (4.2m3, Bolt On Cutting Edge 4.4m3, 3170mm Width, Loose Material)

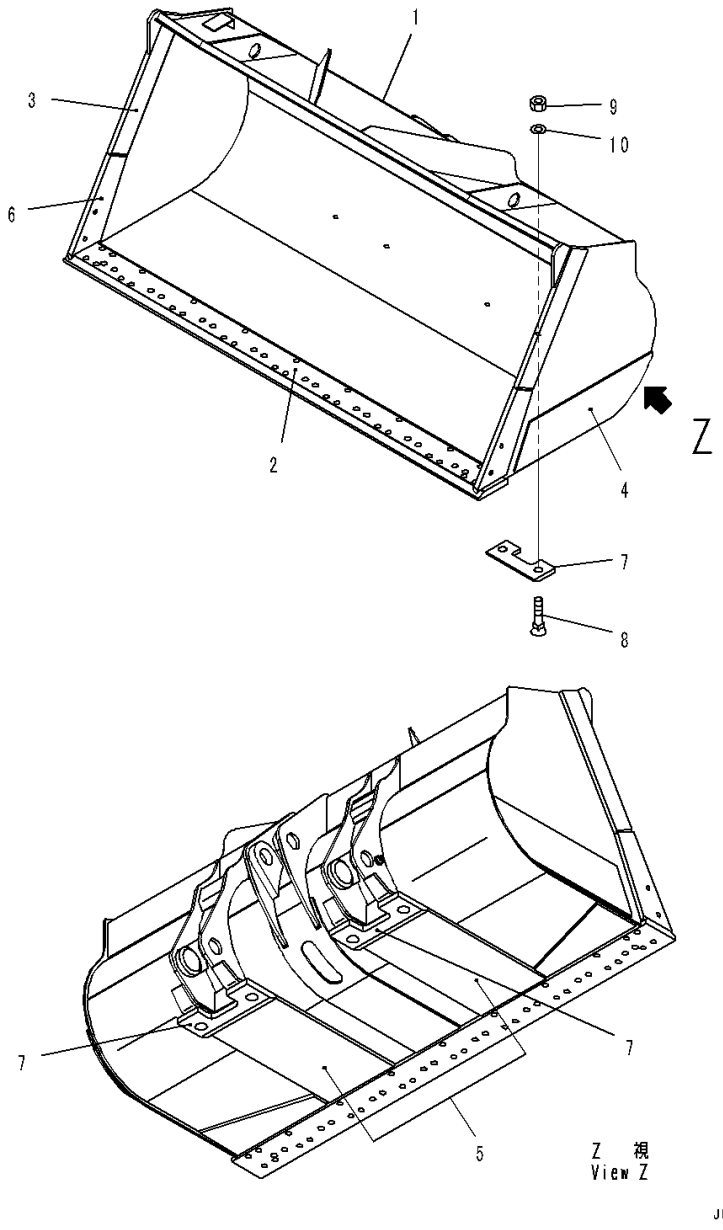

Index	Code	Part Number	Description	Qty	Serial Number
		421-803-4400	Bucket Assembly	1	90216-
1		421-803-4410	• Bucket, 3170mm	1	90216-
2		421-70-32920	• • Edge, Welded	1	90216-
3		421-803-3240	• • Plate, Welded	2	90216-
4		421-803-3150	• • Plate, Welded	2	90216-
5		421-803-3F10	• • Plate, Welded	2	90216-
6		421-803-3130	• • Plate, Welded	2	90216-
7		421-70-22140	• Plate	2	90216-
8		02090-11685	• Bolt	4	90216-
9		02290-11625	• Nut	4	90216-
10		01643-22460	• Washer	4	90216-

FIG. T4120-017001 Bucket (3.9m3, Bolt On Cutting Edge 4.2m3, 3170mm Width)

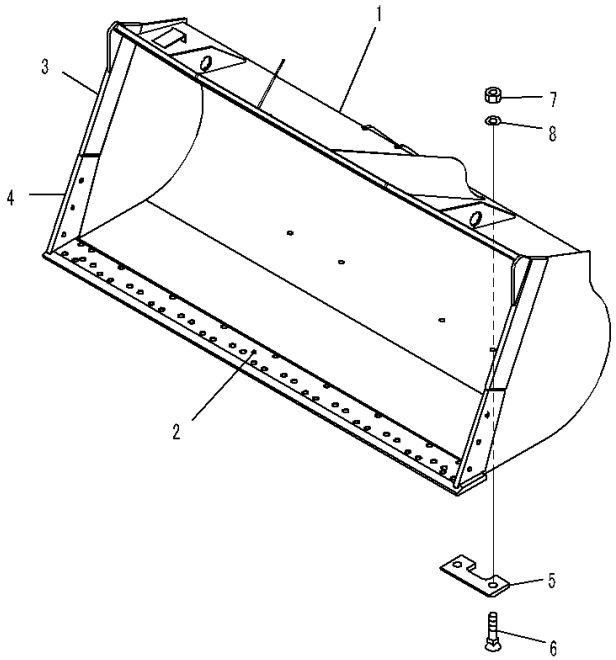

JD033697

Index	Code	Part Number	Description	Qty	Serial Number
		421-70-42400	Bucket Assembly	1	90216-
1		421-70-42320	• Bucket, 3170mm	1	90216-
2		421-70-32920	• • Edge, Welded	1	90216-
3		421-70-32740	• • Plate, Welded	2	90216-
4		421-70-42930	• • Plate, Welded	2	90216-
5		421-70-22140	• Plate	2	90216-
6		02090-11685	• Bolt	4	90216-
7		02290-11625	• Nut	4	90216-
8		01643-22460	• Washer	4	90216-

FIG. T4122-005001 Bolt On Cutting Edge (Segment Edge)

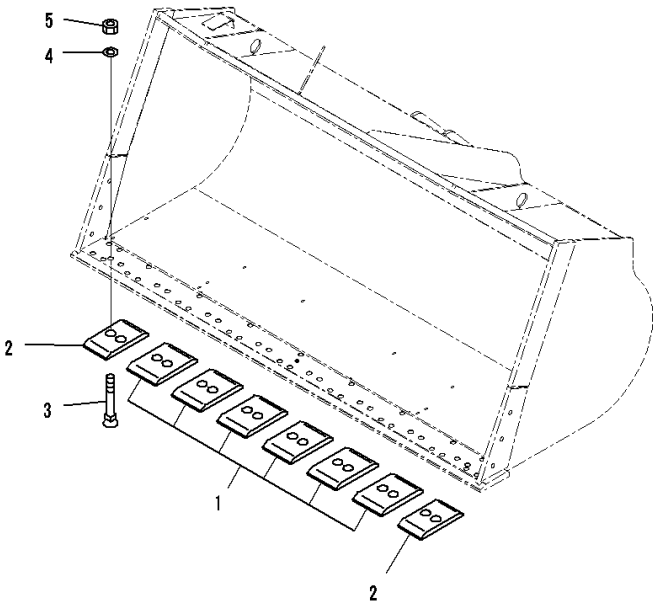

PW0D086

Index	Code	Part Number	Description	Qty	Serial Number
1		421-838-1110	Edge, L=220mm, Center	6	90216-
2		421-838-1120	Edge, L=180mm, Side	2	90216-
3		02091-11600	Bolt	16	90216-
4		01643-22460	Washer	16	90216-
5		02290-11625	Nut	16	90216-

FIG. T4122-006001 Bolt On Cutting Edge (Straight Edge)

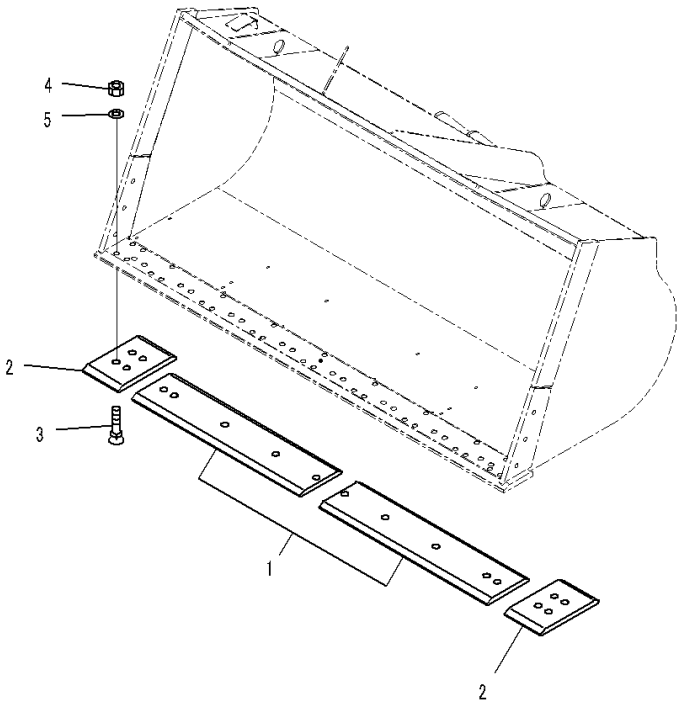

PW0D085

Index	Code	Part Number	Description	Qty	Serial Number
1		421-815-3210	Edge, Center	2	90216-
2		421-815-3220	Edge, Side	2	90216-
3		02090-11485	Bolt	18	90216-
4		02290-11422	Nut	18	90216-
5		01643-32260	Washer	18	90216-

FIG. T4122-007001 Bolt On Cutting Edge (Straight Edge, Long Life)

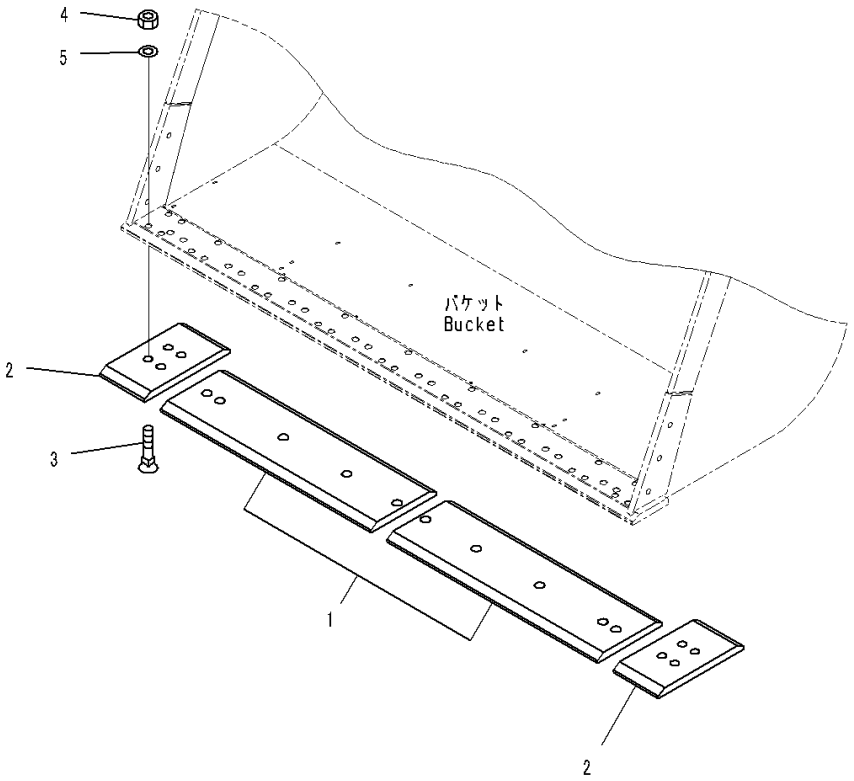

Index	Code	Part Number	Description	Qty	Serial Number
1		421-T79-3210	Edge, Center	2	90216-
2		421-T79-3220	Edge, Side	2	90216-
3		02090-11485	Bolt	18	90216-
4		02290-11422	Nut	18	90216-
5		01643-32260	Washer	18	90216-

FIG. T4122-003001 Bolt On Cutting Edge (Straight Edge, Loose Material Bucket)

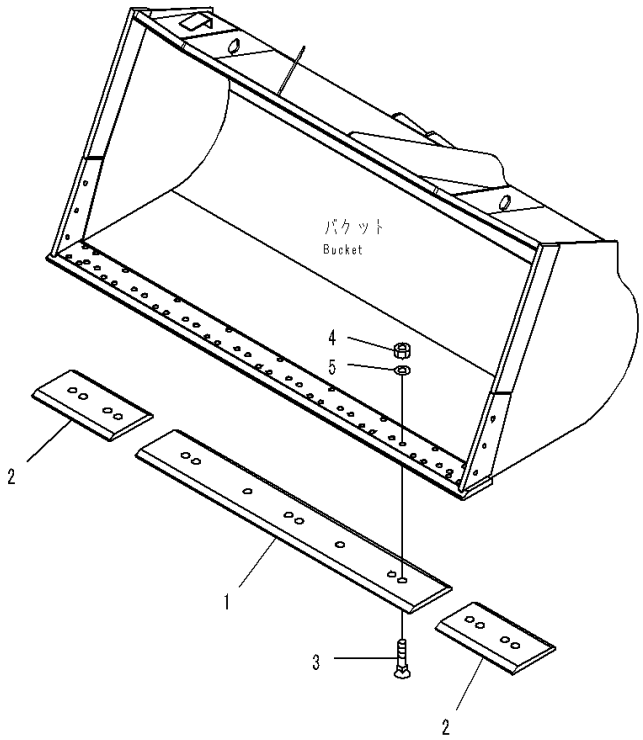

Index	Code	Part Number	Description	Qty	Serial Number
1		421-815-2110	Edge, L=2073mm, Center	1	90216-
2		421-815-1121	Edge, L=546mm, Side	2	90216-
3		02090-11485	Bolt	16	90216-
4		02290-11422	Nut	16	90216-
5		01643-32260	Washer	16	90216-

FIG. T4125-001001 Bucket Side Guard (For Side Edge)

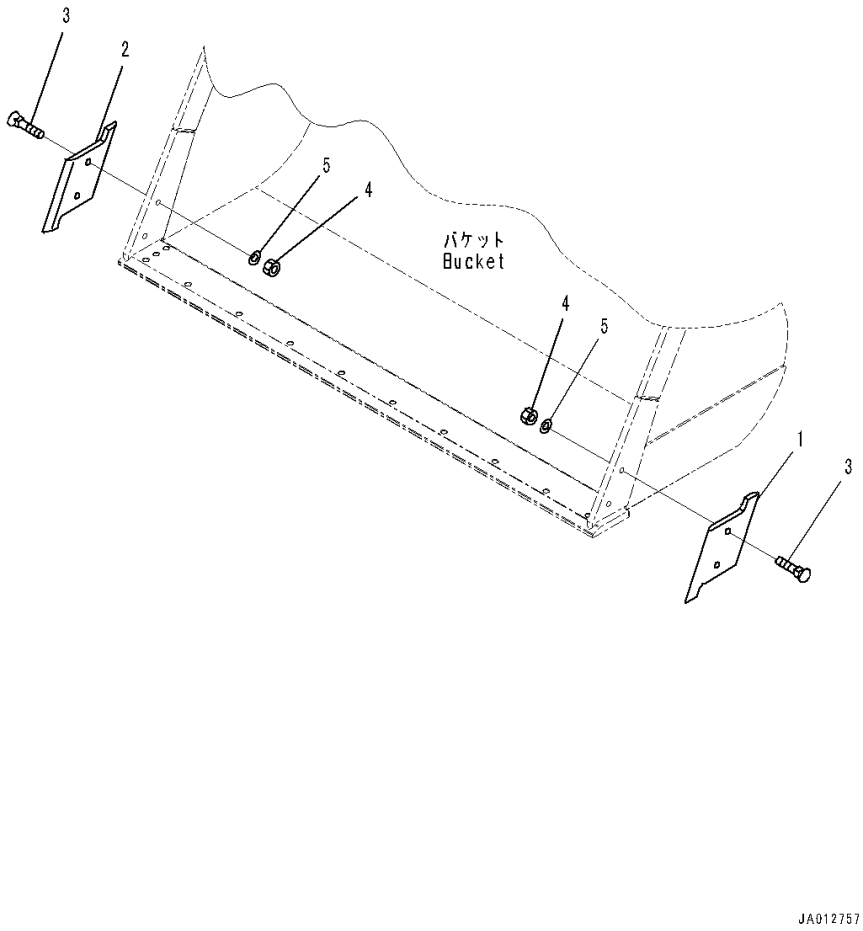

Index	Code	Part Number	Description	Qty	Serial Number
1		421-70-22980	Edge	1	90216-
2		421-70-22990	Edge	1	90216-
3		02090-11480	Bolt	4	90216-
4		02290-11422	Nut	4	90216-
5		01643-32260	Washer	4	90216-

FIG. T4125-002001 Bucket Side Guard (For Excavating)

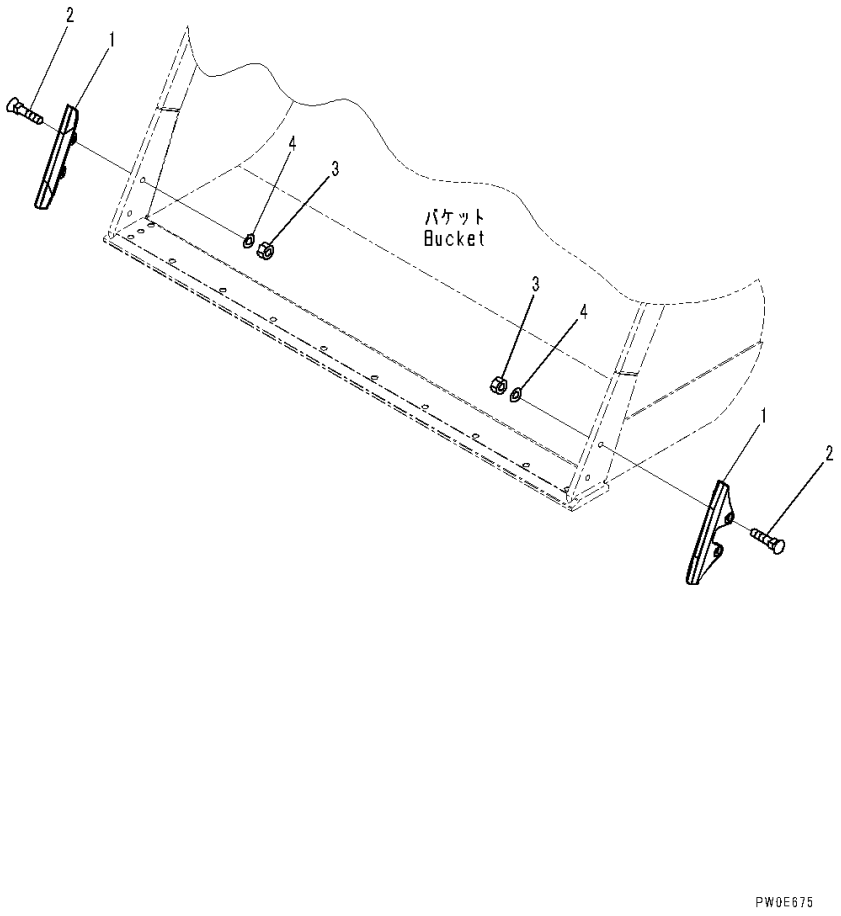

Index	Code	Part Number	Description	Qty	Serial Number
1		421-70-32980	Guard	2	90216-
2		02090-11480	Bolt	4	90216-
3		02290-11422	Nut	4	90216-
4		01643-32260	Washer	4	90216-

FIG. T4130-005001 Bucket Tooth (Bolt-on Adapter and Tip Type, 9 Tooth)

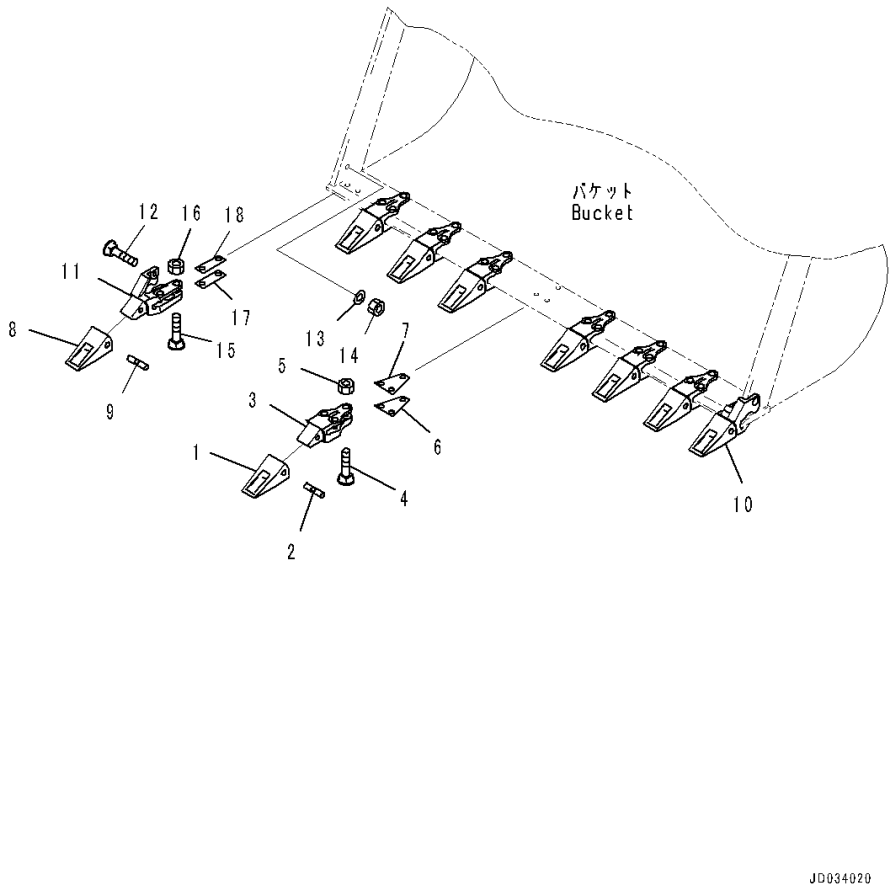

Index	Code	Part Number	Description	Qty	Serial Number
1		423-847-1140	Tooth	7	90216-
2		09244-02516	Pin	7	90216-
3		423-847-1111	Adapter	7	90216-
4		02090-11490	Bolt	21	90216-
5		09218-12219	Nut, Teeth	21	90216-
6		423-70-13120	Shim, T=1.0mm	7	90216-
7		423-70-13130	Shim, T=0.5mm	7	90216-
8		423-847-1140	Tooth	2	90216-
9		09244-02516	Pin	2	90216-
10		423-847-1121	Adapter, L.H.	1	90216-
11		423-847-1131	Adapter, R.H.	1	90216-
12		423-70-13180	Bolt	2	90216-
13		01643-32260	Washer	2	90216-
14		02290-11422	Nut	2	90216-
15		02090-11490	Bolt	4	90216-
16		09218-12219	Nut, Teeth	4	90216-
17		423-70-13160	Shim, T=1.0mm	2	90216-
18		423-70-13170	Shim, T=0.5mm	2	90216-

FIG. T4130-004001 Bucket Tooth (Bolt-on Mono Cast Type, Limestone)

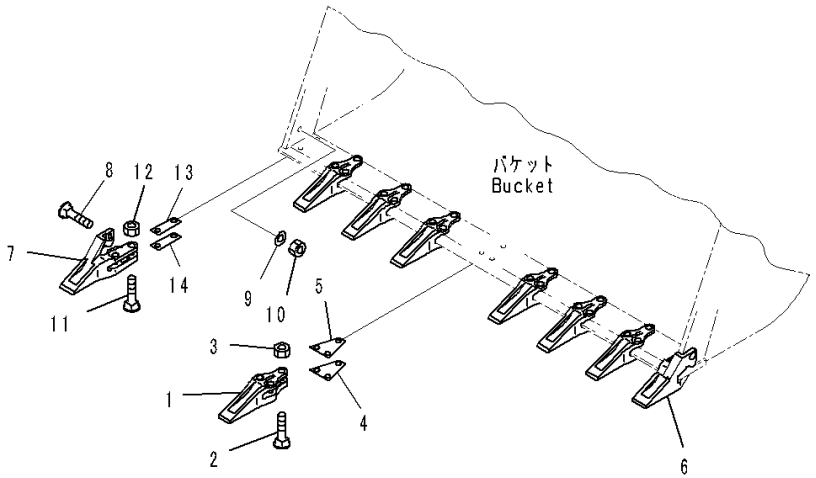

JD034021

Index	Code	Part Number	Description	Qty	Serial Number
1		423-842-1110	Tooth	7	90216-
2		02090-11490	Bolt	21	90216-
3		09218-12219	Nut, Teeth	21	90216-
4		423-70-13120	Shim, T=1.0mm	7	90216-
5		423-70-13130	Shim, T=0.5mm	7	90216-
6		423-842-1120	Corner Tooth, L.H.	1	90216-
7		423-842-1130	Corner Tooth, R.H.	1	90216-
8		423-70-13180	Bolt	2	90216-
9		01643-32260	Washer	2	90216-
10		02290-11422	Nut	2	90216-
11		02090-11490	Bolt	4	90216-
12		09218-12219	Nut, Teeth	4	90216-
13		423-70-13160	Shim, T=1.0mm	2	90216-
14		423-70-13170	Shim, T=0.5mm	2	90216-

FIG. T4130-003001 Bucket Tooth (Bolt-on Mono Cast Type, 9 Tooth)

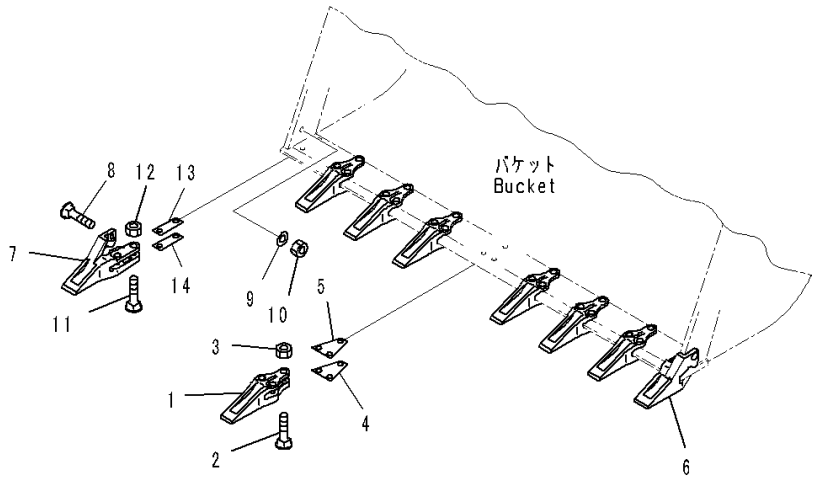

Index	Code	Part Number	Description	Qty	Serial Number
1		423-70-13114	Tooth	7	90216-
2		02090-11490	Bolt	21	90216-
3		09218-12219	Nut, Teeth	21	90216-
4		423-70-13120	Shim, T=1.0mm	7	90216-
5		423-70-13130	Shim, T=0.5mm	7	90216-
6		423-70-13144	Corner Tooth, L.H.	1	90216-
7		423-70-13154	Corner Tooth, R.H.	1	90216-
8		423-70-13180	Bolt	2	90216-
9		01643-32260	Washer	2	90216-
10		02290-11422	Nut	2	90216-
11		02090-11490	Bolt	4	90216-
12		09218-12219	Nut, Teeth	4	90216-
13		423-70-13160	Shim, T=1.0mm	2	90216-
14		423-70-13170	Shim, T=0.5mm	2	90216-

FIG. T4130-002001 Bucket Tooth (Bolt-on Mono Cast Type, Long Life)

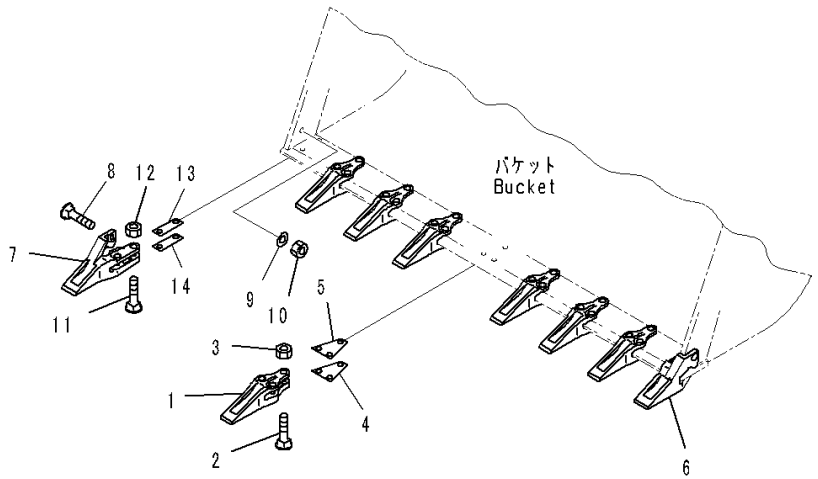

Index	Code	Part Number	Description	Qty	Serial Number
1		423-T74-1110	Tooth	7	90216-
2		02090-11490	Bolt	21	90216-
3		09218-12219	Nut, Teeth	21	90216-
4		423-70-13120	Shim, T=1.0mm	7	90216-
5		423-70-13130	Shim, T=0.5mm	7	90216-
6		423-T74-1120	Corner Tooth, L.H.	1	90216-
7		423-T74-1130	Corner Tooth, R.H.	1	90216-
8		423-70-13180	Bolt	2	90216-
9		01643-32260	Washer	2	90216-
10		02290-11422	Nut	2	90216-
11		02090-11490	Bolt	4	90216-
12		09218-12219	Nut, Teeth	4	90216-
13		423-70-13160	Shim, T=1.0mm	2	90216-
14		423-70-13170	Shim, T=0.5mm	2	90216-

FIG. T4140-008001 Lift Cylinder (L.H.)

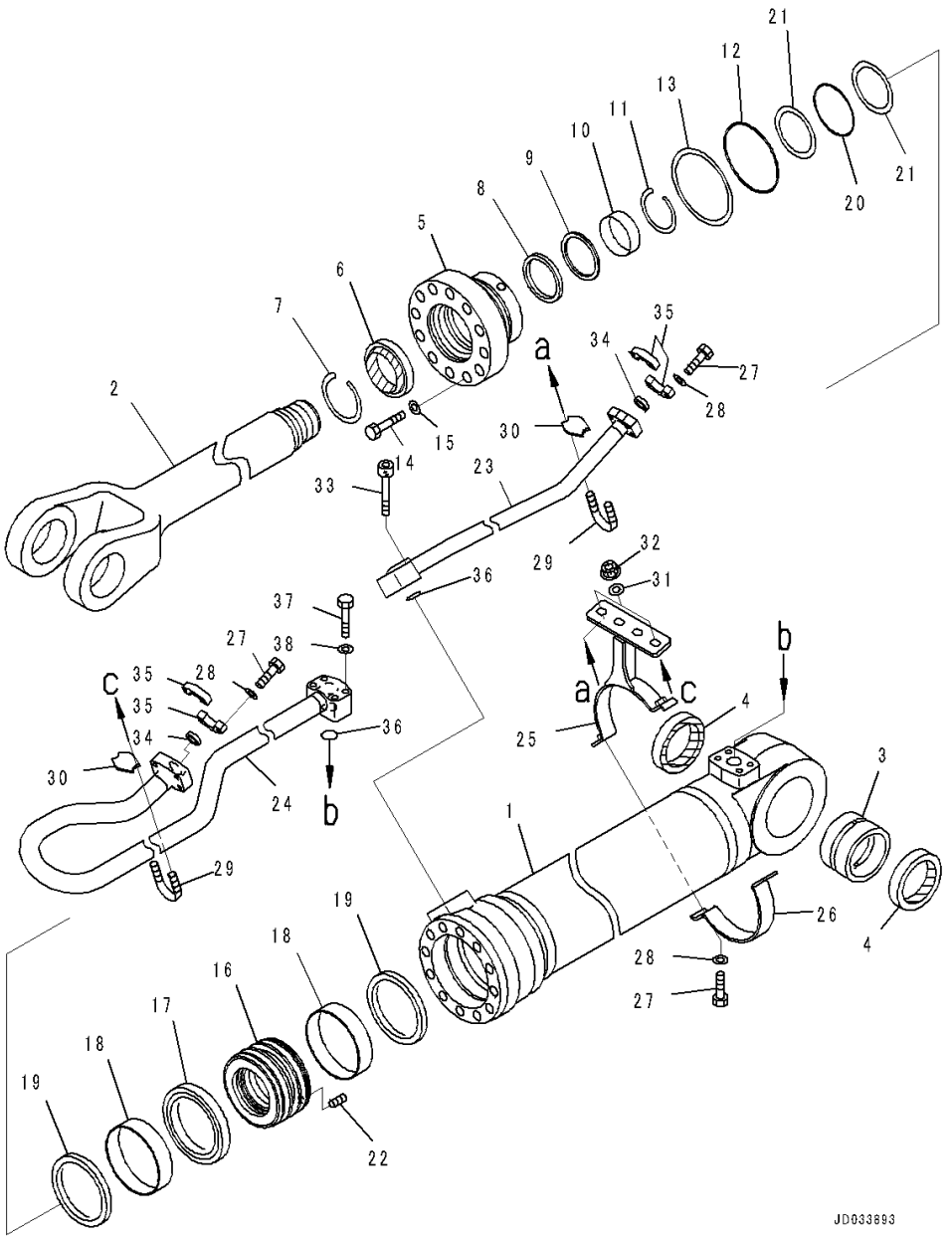

Index	Code	Part Number	Description	Qty	Serial Number
		Note: This list covers following specifications.			
		With Tire Stopper, Without BMRC Bushing			
		Without BMRC Bushing			
		707-01-0K612	Cylinder Assembly	1	90216-
1		707-13-14910	• Cylinder	1	90216-
2		707-59-95070	• Rod, Piston	1	90216-
3		707-76-11030	• Bushing	1	90216-
4		421-09-11320	• Seal, Dust, (Kit : K12)	2	90216-
5		721-27-14050	• Head, Cylinder	1	90216-
6		707-56-95740	• Seal, Dust, (Kit : K12)	1	90216-
7		07179-13109	• Ring, Snap	1	90216-
8		707-51-95030	• Packing, Rod, (Kit : K12)	1	90216-
9		707-51-95650	• Ring, Buffer, (Kit : K12)	1	90216-
10		707-52-90721	• Bushing	1	90216-
11		707-75-95030	• Ring, Snap	1	90216-
12		07000-15130	• O-ring, (Kit : K12)	1	90216-
13		707-35-91420	• Ring, Back-up, (Kit : K12)	1	90216-
14		01010-81875	• Bolt	12	90216-
15		707-41-11840	• Washer	12	90216-
16		707-36-14650	• Piston	1	90216-
17		707-44-14150	• Ring, Piston, (Kit : K12)	1	90216-
18		707-39-14110	• Ring, Wear, (Kit : K12)	2	90216-
19		707-44-14910	• Ring	2	90216-
20		07000-B5090	• O-ring, (Kit : K12)	1	90216-
21		07001-05090	• Ring, Back-up, (Kit : K12)	2	90216-
22		01310-01216	• Screw	1	90216-
23		707-86-00560	Tube, L.H.	1	90216-
24		707-86-00580	Tube, L.H.	1	90216-
25		707-88-50820	Bracket, L.H.	1	90216-
26		707-88-21321	Band	1	90216-
27		07372-21035	Bolt	10	90216-
28		01643-51032	Washer	10	90216-
29		07283-33450	Clip	2	90216-
30		07283-53444	Seat	2	90216-
31		01643-31032	Washer	4	90216-
32		01597-01009	Nut	4	90216-
33		01252-71040	Bolt, Hexagon Socket Head	4	90216-
34		707-88-33040	Cap	2	90216-
35		07371-31049	Flange, Split	4	90216-
36		07000-13035	O-ring, (Kit : K12)	2	90216-

FIG. T4140-008001 Lift Cylinder (L.H.)

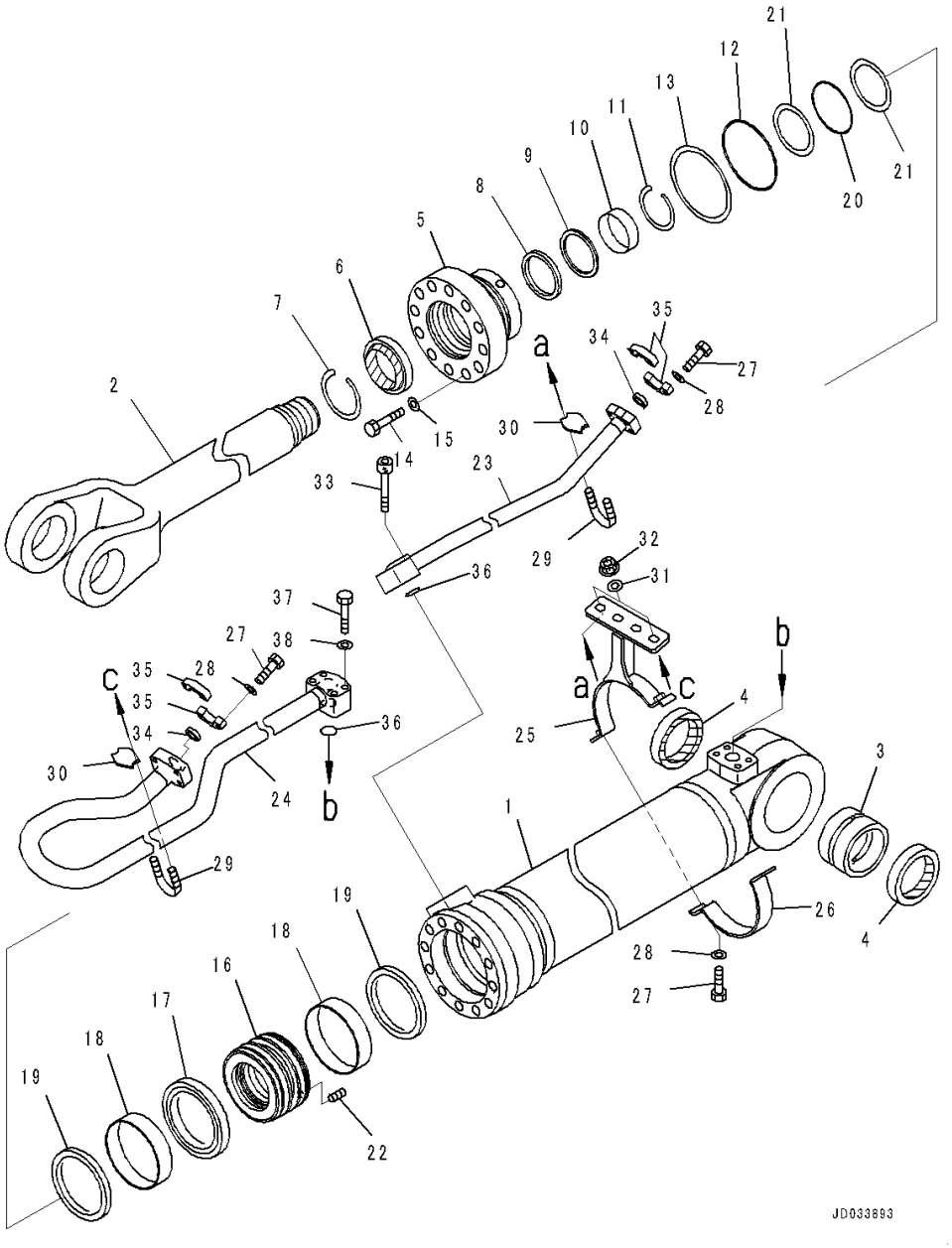

Index	Code	Part Number	Description	Qty	Serial Number
37		07372-21060	Bolt	4	90216-
38		01643-51032	Washer	4	90216-

FIG. T4140-008002 Lift Cylinder (R.H.)

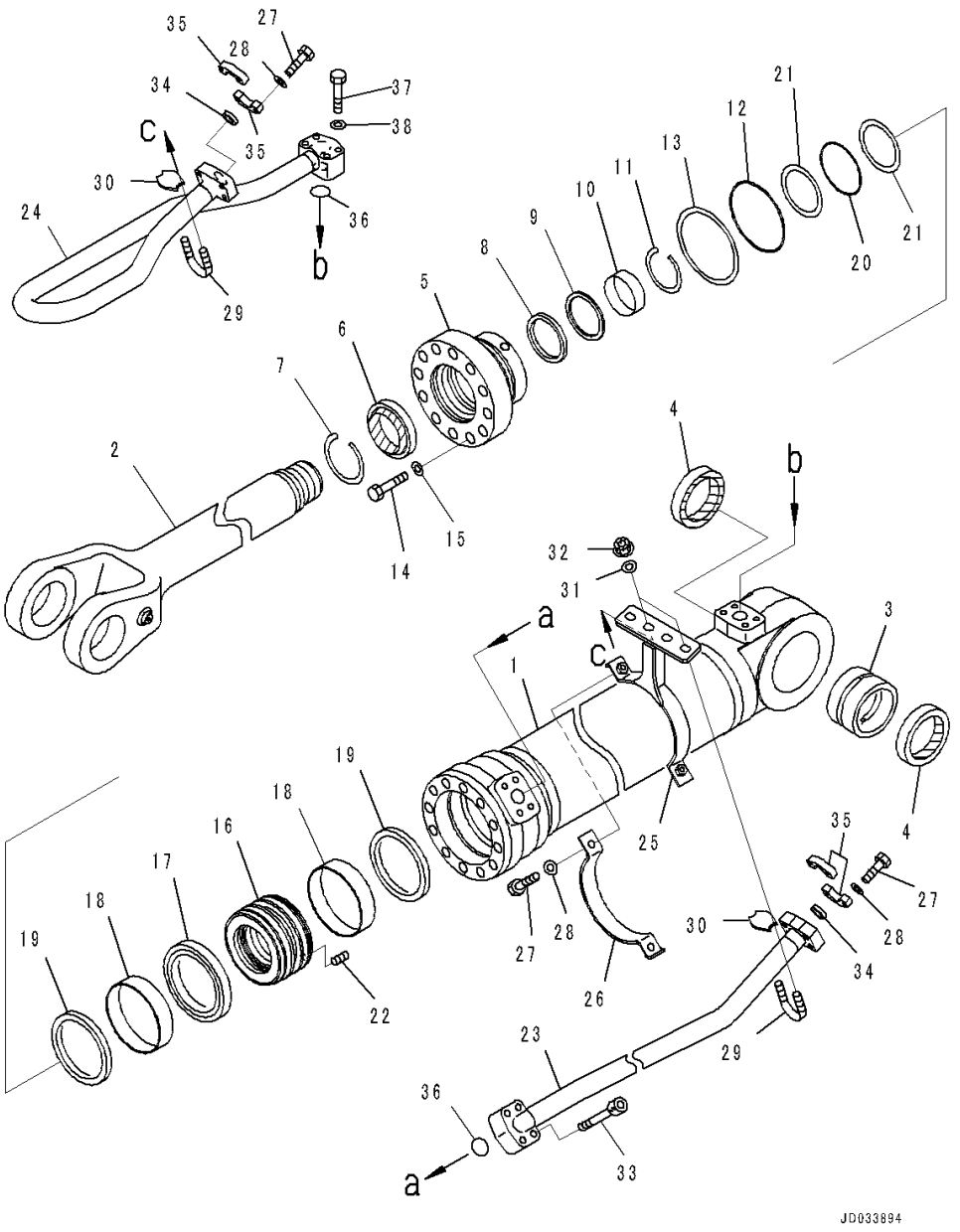

Index	Code	Part Number	Description	Qty	Serial Number
		Note: This list covers following specifications.			
		With Tire Stopper, Without BMRC Bushing			
		Without BMRC Bushing			
		707-01-0K622	Cylinder Assembly	1	90216-
1		707-13-14920	• Cylinder	1	90216-
2		707-59-95070	• Rod, Piston	1	90216-
3		707-76-11030	• Bushing	1	90216-
4		421-09-11320	• Seal, Dust, (Kit : K12)	2	90216-
5		721-27-14050	• Head, Cylinder	1	90216-
6		707-56-95740	• Seal, Dust, (Kit : K12)	1	90216-
7		07179-13109	• Ring, Snap	1	90216-
8		707-51-95030	• Packing, Rod, (Kit : K12)	1	90216-
9		707-51-95650	• Ring, Buffer, (Kit : K12)	1	90216-
10		707-52-90721	• Bushing	1	90216-
11		707-75-95030	• Ring, Snap	1	90216-
12		07000-15130	• O-ring, (Kit : K12)	1	90216-
13		707-35-91420	• Ring, Back-up, (Kit : K12)	1	90216-
14		01010-81875	• Bolt	12	90216-
15		707-41-11840	• Washer	12	90216-
16		707-36-14650	• Piston	1	90216-
17		707-44-14150	• Ring, Piston, (Kit : K12)	1	90216-
18		707-39-14110	• Ring, Wear, (Kit : K12)	2	90216-
19		707-44-14910	• Ring	2	90216-
20		07000-B5090	• O-ring, (Kit : K12)	1	90216-
21		07001-05090	• Ring, Back-up, (Kit : K12)	2	90216-
22		01310-01216	• Screw	1	90216-
23		707-86-00570	Tube, R.H.	1	90216-
24		707-86-00590	Tube, R.H.	1	90216-
25		707-88-50830	Bracket, R.H.	1	90216-
26		707-88-21321	Band	1	90216-
27		07372-21035	Bolt	10	90216-
28		01643-51032	Washer	10	90216-
29		07283-33450	Clip	2	90216-
30		07283-53444	Seat	2	90216-
31		01643-31032	Washer	4	90216-
32		01597-01009	Nut	4	90216-
33		01252-71040	Bolt, Hexagon Socket Head	4	90216-
34		707-88-33040	Cap	2	90216-
35		07371-31049	Flange, Split	4	90216-
36		07000-13035	O-ring, (Kit : K12)	2	90216-

FIG. T4140-008002 Lift Cylinder (R.H.)

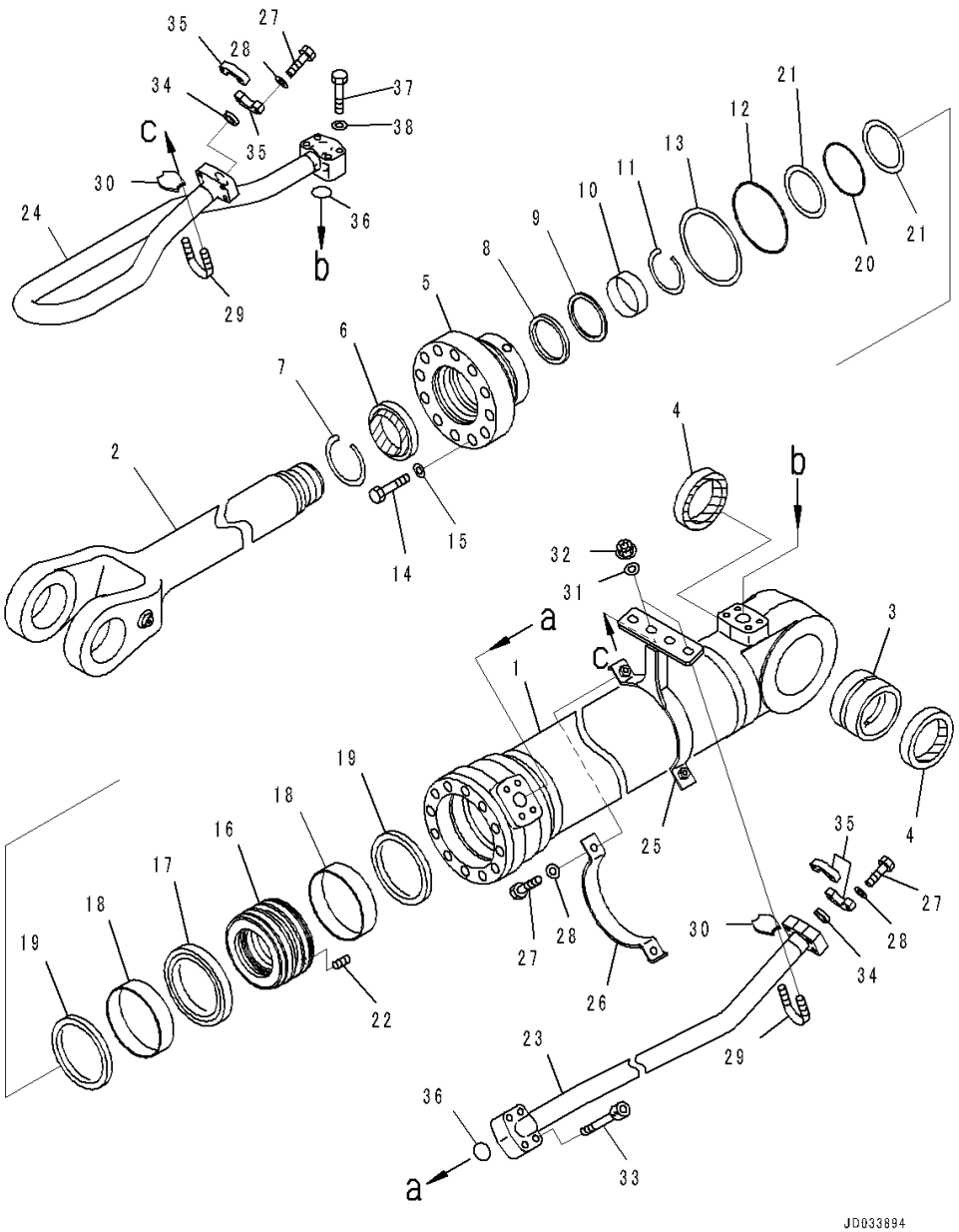

Index	Code	Part Number	Description	Qty	Serial Number
37		07372-21060	Bolt	4	90216-
38		01643-51032	Washer	4	90216-

FIG. T4140-008003 Lift Cylinder (Piping)

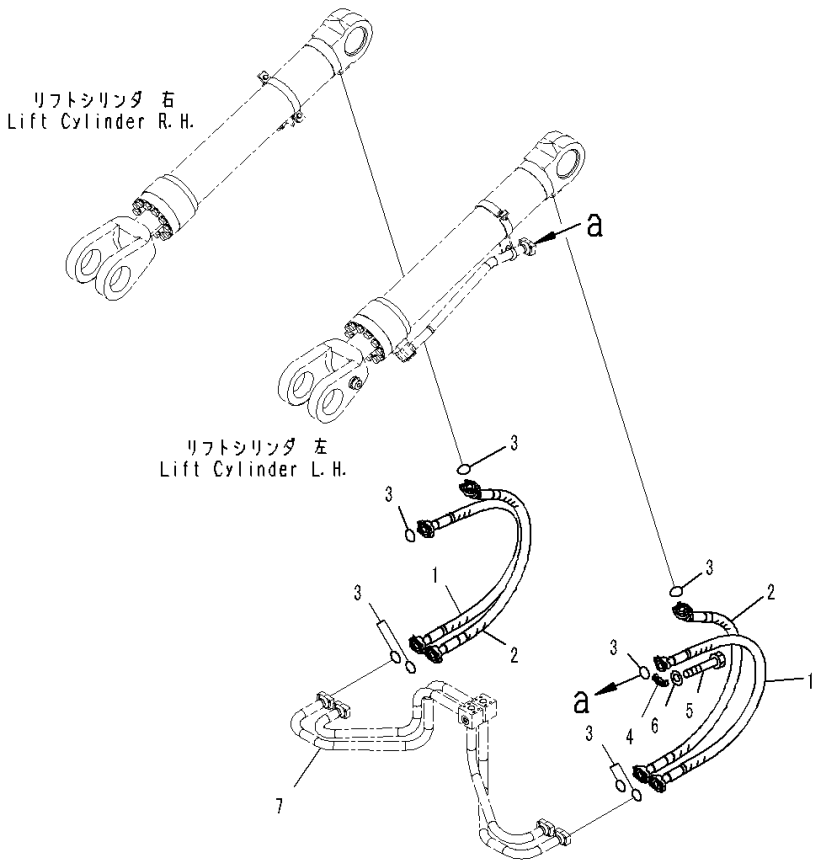

Index	Code	Part Number	Description	Qty	Serial Number
		Note: This list covers following specifications.			
		With Tire Stopper, Without BMRC Bushing			
		Without BMRC Bushing			
1		07085-01014	Hose, Flange Type	2	90216-
2		07085-01014	Hose, Flange Type	2	90216-
3		07000-13032	O-ring	8	90216-
4		07371-31049	Flange, Split	16	90216-
5		07372-21035	Bolt	32	90216-
6		01643-51032	Washer	32	90216-
7		(421-62-43243)	Tube(Refer to Page 447)		-

FIG. T4140-008004 Lift Cylinder (With Tire Stopper, Without BMRC Bushing) (Pin)

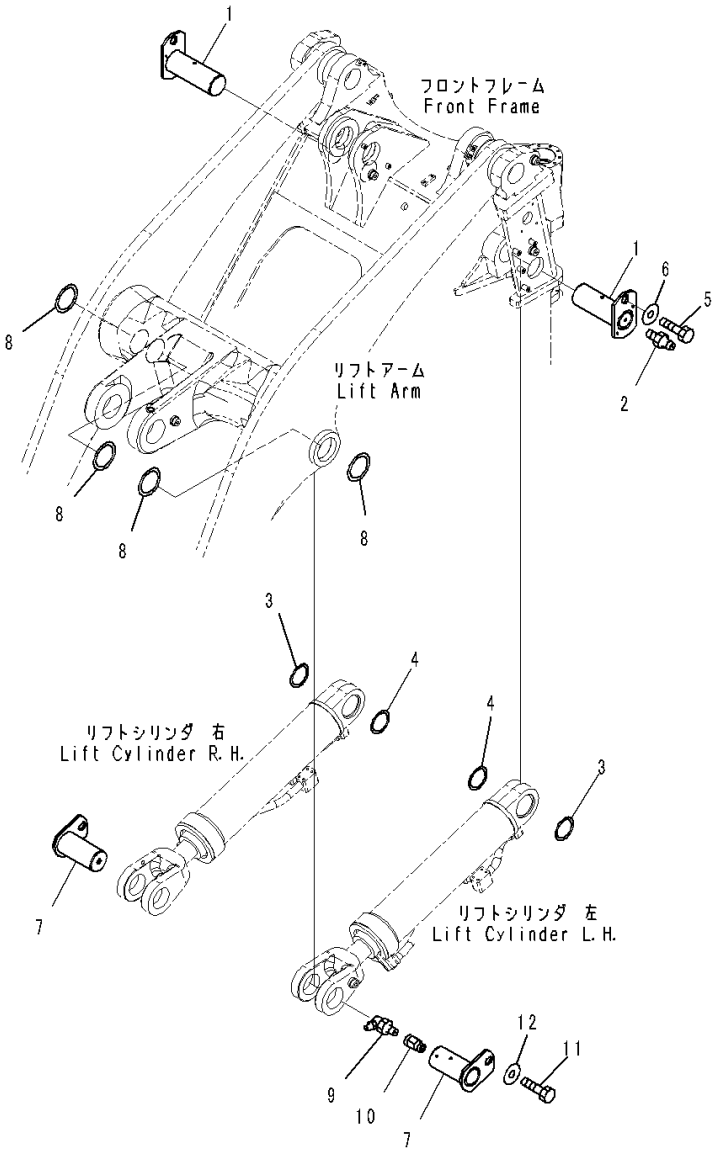

Index	Code	Part Number	Description	Qty	Serial Number
1		421-70-11980	Pin	2	90216-
2		07020-00900	Fitting, Grease	2	90216-
3		423-70-41980	Shim, T=1.0mm	6	90216-
4		421-70-11481	Shim, T=3.0mm	2	90216-
5		01010-81630	Bolt	2	90216-
6		421-70-11280	Washer	2	90216-
7		421-70-11970	Pin	2	90216-
8		421-70-41380	Shim, T=1.0mm	6	90216-
9		07020-00900	Fitting, Grease	2	90216-
10		423-70-11160	Nipple	2	90216-
11		01010-81630	Bolt	2	90216-
12		421-70-11280	Washer	2	90216-

FIG. T4140-004004 Lift Cylinder (Without BMRC Bushing) (Pin)

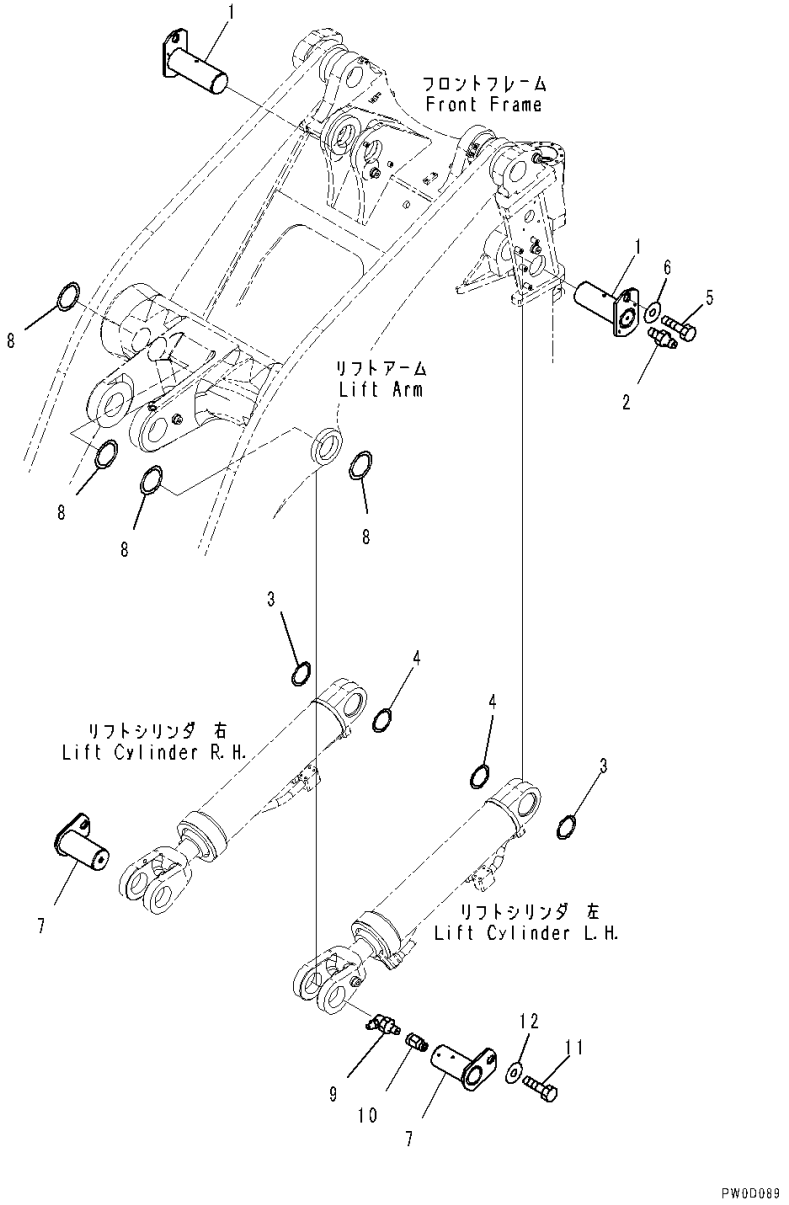

Index	Code	Part Number	Description	Qty	Serial Number
1		421-70-11980	Pin	2	90216-
2		07020-00000	Fitting, Grease	2	90216-
3		423-70-41980	Shim, T=1.0mm	6	90216-
4		421-70-11481	Shim, T=3.0mm	2	90216-
5		01010-81630	Bolt	2	90216-
6		421-70-11280	Washer	2	90216-
7		421-70-11970	Pin	2	90216-
8		421-70-41380	Shim, T=1.0mm	6	90216-
9		07020-00900	Fitting, Grease	2	90216-
10		423-70-11160	Nipple	2	90216-
11		01010-81630	Bolt	2	90216-
12		421-70-11280	Washer	2	90216-

FIG. T4150-004001 Bucket Cylinder (Large Diameter Type) (Inner Parts)

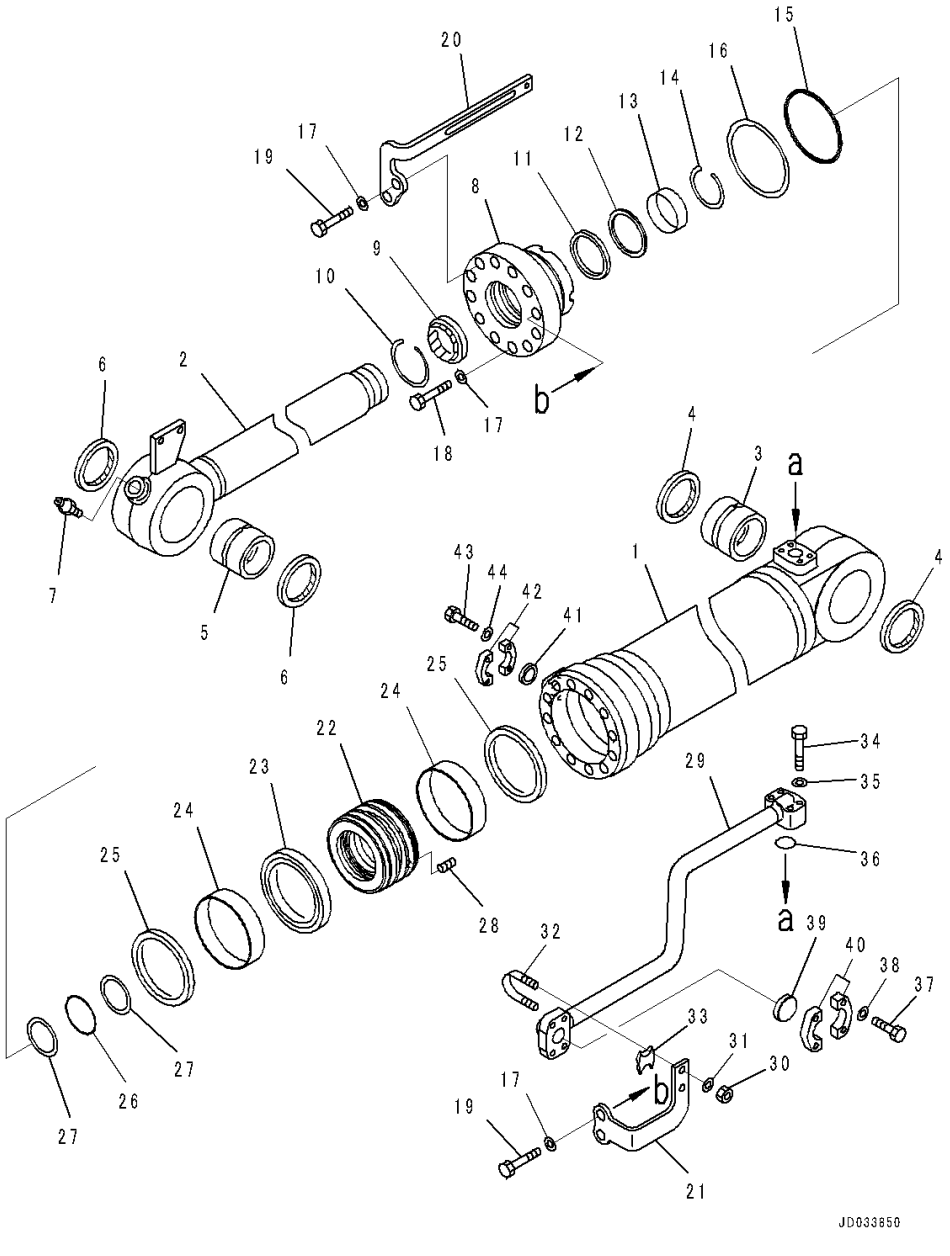

Index	Code	Part Number	Description	Qty	Serial Number
		707-01-0K630	Cylinder Assembly	1	90216-
1		721-13-16190	• Cylinder	1	90216-
2		721-58-10170	• Rod	1	90216-
3		707-76-12110	• Bushing	1	90216-
4		421-09-11350	• Seal, Dust, (Kit : K13)	2	90216-
5		707-76-12030	• Bushing	1	90216-
6		421-09-11350	• Seal, Dust, (Kit : K13)	2	90216-
7		07020-00000	• Fitting, Grease	1	90216-
8		707-27-16950	• Head, Cylinder	1	90216-
9		707-56-10740	• Seal, Dust, (Kit : K13)	1	90216-
10		07179-13114	• Ring, Snap	1	90216-
11		707-51-10030	• Packing, Rod, (Kit : K13)	1	90216-
12		707-51-10650	• Ring, Buffer, (Kit : K13)	1	90216-
13		707-52-90781	• Bushing	1	90216-
14		707-75-10160	• Ring, Snap	1	90216-
15		07000-15150	• O-ring, (Kit : K13)	1	90216-
16		707-35-91640	• Ring, Back-up, (Kit : K13)	1	90216-
17		707-88-75310	• Washer	12	90216-
18		01010-82085	• Bolt	8	90216-
19		01010-82095	• Bolt	4	90216-
20		707-88-27960	• Plate	1	90216-
21		707-88-28560	• Bracket	1	90216-
22		707-36-16580	• Piston	1	90216-
23		707-44-16190	• Ring, Piston, (Kit : K13)	1	90216-
24		707-39-16120	• Ring, Wear, (Kit : K13)	2	90216-
25		707-44-16910	• Ring	2	90216-
26		07000-B5100	• O-ring, (Kit : K13)	1	90216-
27		07001-05100	• Ring, Back-up, (Kit : K13)	2	90216-
28		01310-01216	• Screw	1	90216-
29		707-86-13660	Tube	1	90216-
30		01597-01009	Nut	2	90216-
31		01643-31032	Washer	2	90216-
32		07283-33450	Clip	1	90216-
33		07283-53444	Seat	1	90216-
34		07372-21060	Bolt	4	90216-
35		01643-51032	Washer	4	90216-
36		07000-13035	O-ring, (Kit : K13)	1	90216-
37		01010-81245	Bolt	4	90216-
38		01643-31232	Washer	4	90216-
39		707-88-33050	Cap	1	90216-

FIG. T4150-004001 Bucket Cylinder (Large Diameter Type) (Inner Parts)

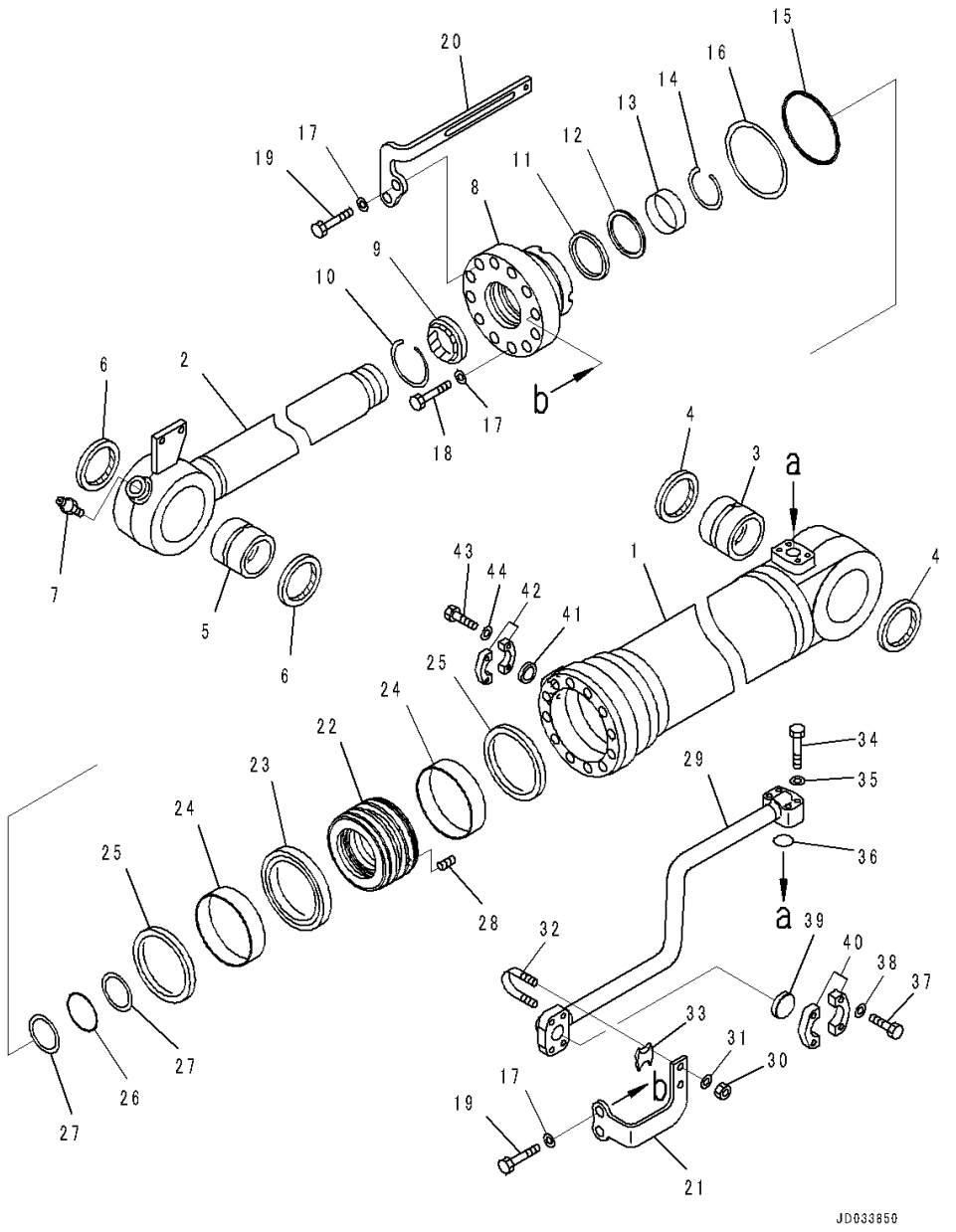

Index	Code	Part Number	Description	Qty	Serial Number
40		07371-51260	Flange, Split	2	90216-
41		707-88-33040	Cap	1	90216-
42		07371-31049	Flange, Split	2	90216-
43		07372-21035	Bolt	4	90216-
44		01643-51032	Washer	4	90216-

FIG. T4150-004002A Bucket Cylinder (Mounting)

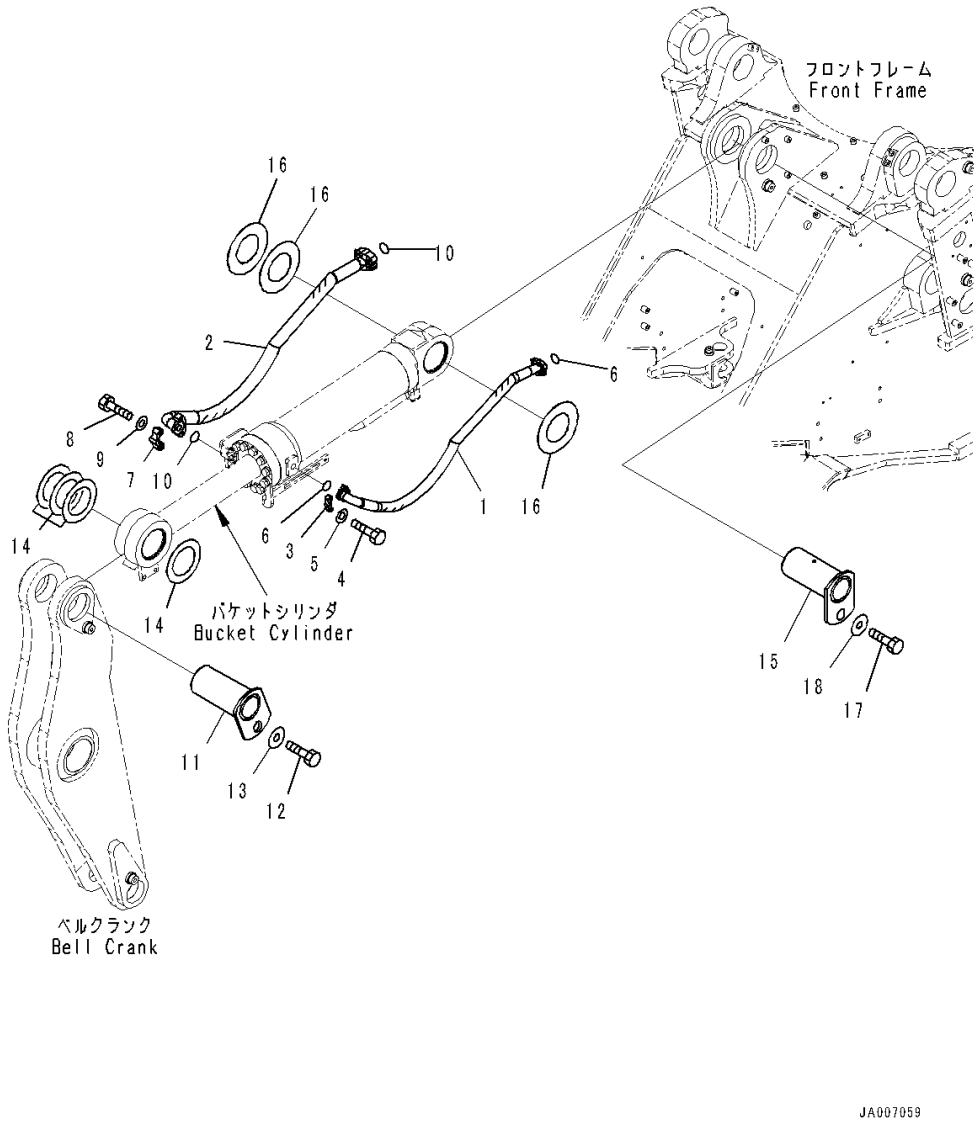

Index	Code	Part Number	Description	Qty	Serial Number
		Note: This list covers following specifications.			
		Large Diameter Type			
		Large Diameter Type, Fork			
1		421-62-44860	Hose	1	90216-
2		421-62-44850	Hose	1	90216-
3		07371-31049	Flange, Split	4	90216-
4		07372-21035	Bolt	8	90216-
5		01643-51032	Washer	8	90216-
6		07000-13032	O-ring	2	90216-
7		07371-51260	Flange, Split	4	90216-
8		01010-81245	Bolt	8	90216-
9		01643-31232	Washer	8	90216-
10		07000-13038	O-ring	2	90216-
11		421-70-11940	Pin	1	90216-
12		01010-81630	Bolt	1	90216-
13		421-70-11280	Washer	1	90216-
14		421-70-41410	Shim, T=1.0mm	5	90216-
15		421-70-21960	Pin	1	90216-
16		421-70-41410	Shim, T=1.0mm	3	90455-
17		01010-81630	Bolt	1	90216-
18		421-70-11280	Washer	1	90216-

FIG. T4150-009001 Bucket Cylinder (Large Diameter Type, Fork) (Inner Parts)

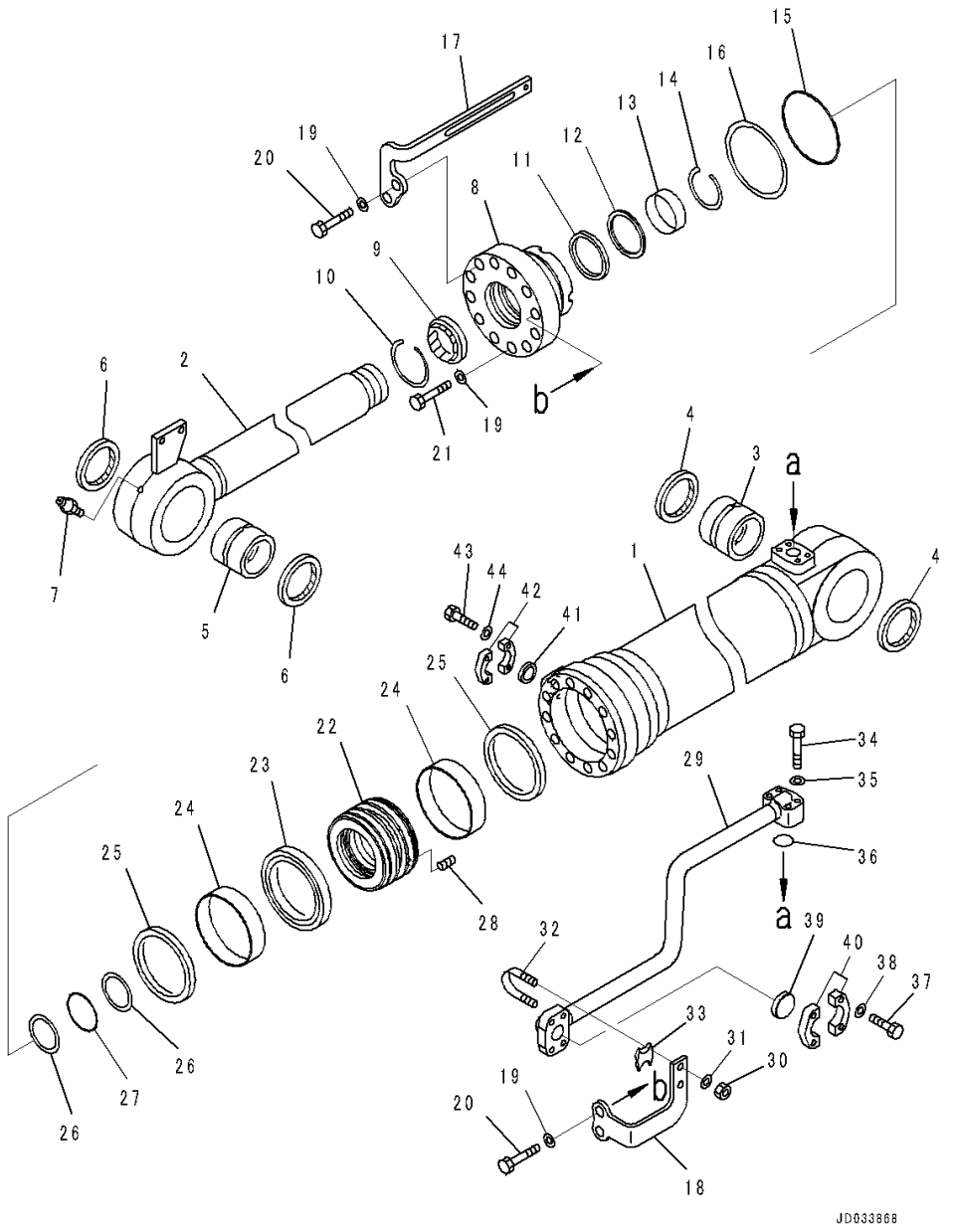

Index	Code	Part Number	Description	Qty	Serial Number
		707-01-0L890	Cylinder Assembly	1	90216-
1		721-13-18090	• Cylinder	1	90216-
2		707-58-11970	• Rod	1	90216-
3		707-76-12110	• Bushing	1	90216-
4		421-09-11350	• Seal, Dust, (Kit : K14)	2	90216-
5		707-76-12030	• Bushing	1	90216-
6		421-09-11350	• Seal, Dust, (Kit : K14)	2	90216-
7		07020-00000	• Fitting, Grease	1	90216-
8		707-27-18980	• Head, Cylinder	1	90216-
9		707-56-11740	• Seal, Dust, (Kit : K14)	1	90216-
10		07179-13126	• Ring, Snap	1	90216-
11		707-51-11030	• Packing, Rod, (Kit : K14)	1	90216-
12		707-51-11650	• Ring, Buffer, (Kit : K14)	1	90216-
13		707-52-90851	• Bushing	1	90216-
14		707-75-11040	• Ring, Snap	1	90216-
15		07000-15170	• O-ring, (Kit : K14)	1	90216-
16		707-35-91910	• Ring, Back-up, (Kit : K14)	1	90216-
17		707-88-26280	• Plate	1	90216-
18		707-88-50190	• Bracket	1	90216-
19		707-88-75410	• Washer	12	90216-
20		01011-82410	• Bolt	4	90216-
21		01011-82400	• Bolt	8	90216-
22		707-36-18630	• Piston	1	90216-
23		707-44-18150	• Ring, Piston, (Kit : K14)	1	90216-
24		707-39-18030	• Ring, Wear, (Kit : K14)	2	90216-
25		707-44-18910	• Ring	2	90216-
26		07001-05110	• Ring, Back-up, (Kit : K14)	2	90216-
27		07000-B5110	• O-ring, (Kit : K14)	1	90216-
28		01310-01225	• Screw	1	90216-
29		707-86-13970	Tube	1	90216-
30		01597-01009	Nut	2	90216-
31		01643-31032	Washer	2	90216-
32		07283-33450	Clip	1	90216-
33		07283-53444	Seat	1	90216-
34		07372-21060	Bolt	4	90216-
35		01643-51032	Washer	4	90216-
36		07000-13035	O-ring, (Kit : K14)	1	90216-
37		01010-81245	Bolt	4	90216-
38		01643-31232	Washer	4	90216-
39		707-88-33050	Cap	1	90216-

FIG. T4150-009001 Bucket Cylinder (Large Diameter Type, Fork) (Inner Parts)

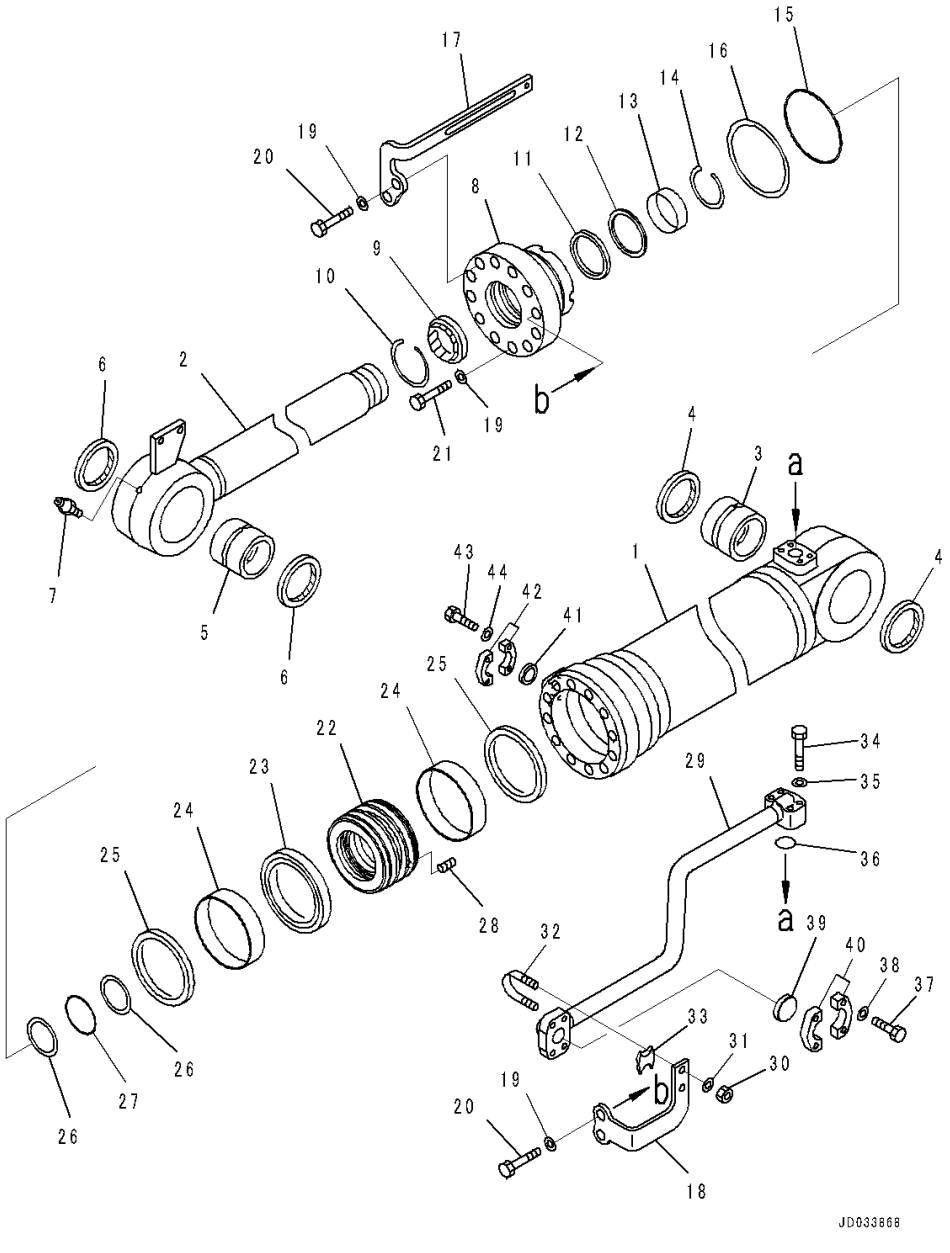

Index	Code	Part Number	Description	Qty	Serial Number
40		07371-51260	Flange, Split	2	90216-
41		707-88-33040	Cap	1	90216-
42		07371-31049	Flange, Split	2	90216-
43		07372-21035	Bolt	4	90216-
44		01643-51032	Washer	4	90216-

MARKS AND PLATES

FIG. U0100-017001 Marks and Plates (English) (Exterior)

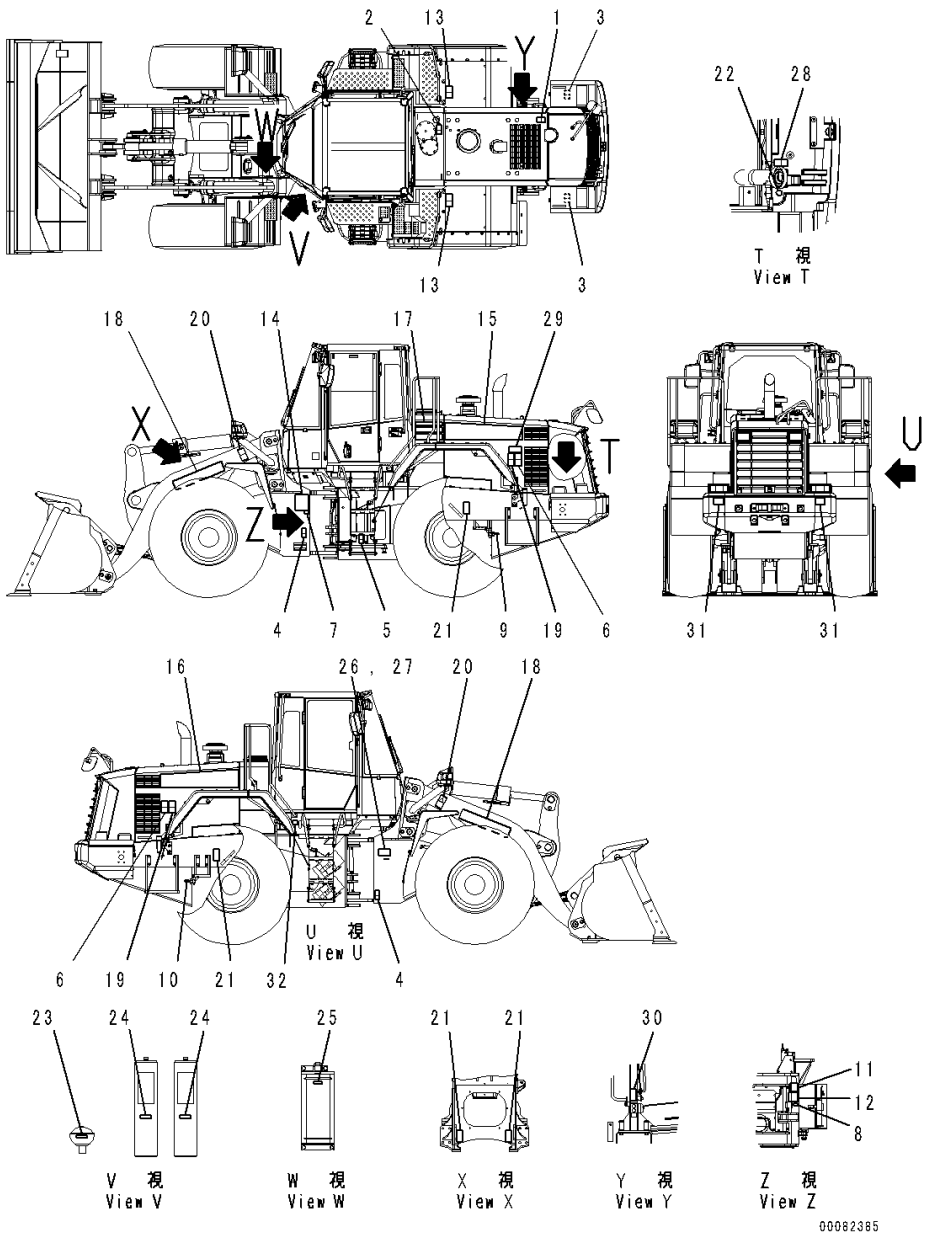

Index	Code	Part Number	Description	Qty	Serial Number
		426-93-21570	Plate Assembly	1	90216-
1		09653-A0641	• Plate, Warning, High Temperature	1	90216-
2		09653-A0641	• Plate, Warning, High Temperature	1	90216-
3		09808-A1201	• Plate, Warning, Battery Cables	2	90216-
4		09162-C0641	• Plate, Danger, Keep Off	2	90216-
5		09161-C0641	• Plate, Warning, Articulation Lock	1	90216-
6		09667-A0880	• Plate, Caution, Rotating Object	2	90216-
		423-93-41172	Plate Assembly	1	90216-
7	C1		• Plate, Remote Grease, Cylinder	1	90216-
8	C1		• Plate, Remote Grease, Rear Axle	1	90216-
9	C1		• Plate, Radiator Drain	1	90216-
10	C1		• Plate, Engine Oil Drain	1	90216-
11	C1		• Plate, Parking Brake Emergency Release Switch	1	90216-
12	C1		• Plate, Parking Brake Emergency Release Caution	1	90216-
13		09805-C0881	• Plate, Caution, Do not Get On	2	90216-
14		421-93-41310	Oil Chart	1	90216-
15		421-93-42240	Plate, Machine Model, WA470	1	90216-
16		421-93-42250	Plate, Machine Model, WA470	1	90216-
17		421-93-42230	Plate, Stripe	2	90216-
18		09690-P0900	Plate, Komatsu Logo	2	90216-
19		09806-C0883	Plate, Danger, Keep Away from Machine .	2	90216-
20		09807-C0883	Plate, Danger, Keep Out under Work Equipment	2	90216-
21		09960-01601	Mark, Lift Point and Tie Down Point Marks	4	90216-
22		09669-0000E	Plate, Symbol, Fuel Filler	1	90216-
23		09659-A057B	Plate, Warning, Explosion Hazard, PPC Accumulator	1	90216-
24		09659-A057B	Plate, Warning, Explosion Hazard, Brake Accumulator	2	90216-
25		09659-A057B	Plate, Warning, Explosion Hazard, ECSS Accumulator	1	90216-
26	C2	09602-10001	Plate, Name (Limited Supply)	1	90216-
27		04418-13060	Screw	4	90216-
28		09667-A0481	Plate, Caution, Rotating Object	1	90216-
29		20Y-00-41530	Plate, Symbol, Ecot3	1	90216-
30		20Y-00-41340	Plate, Pre Filter Caution	1	90216-
31		14X-98-35181	Plate, Reflector	2	90216-

FIG. U0100-017001 Marks and Plates (English) (Exterior)

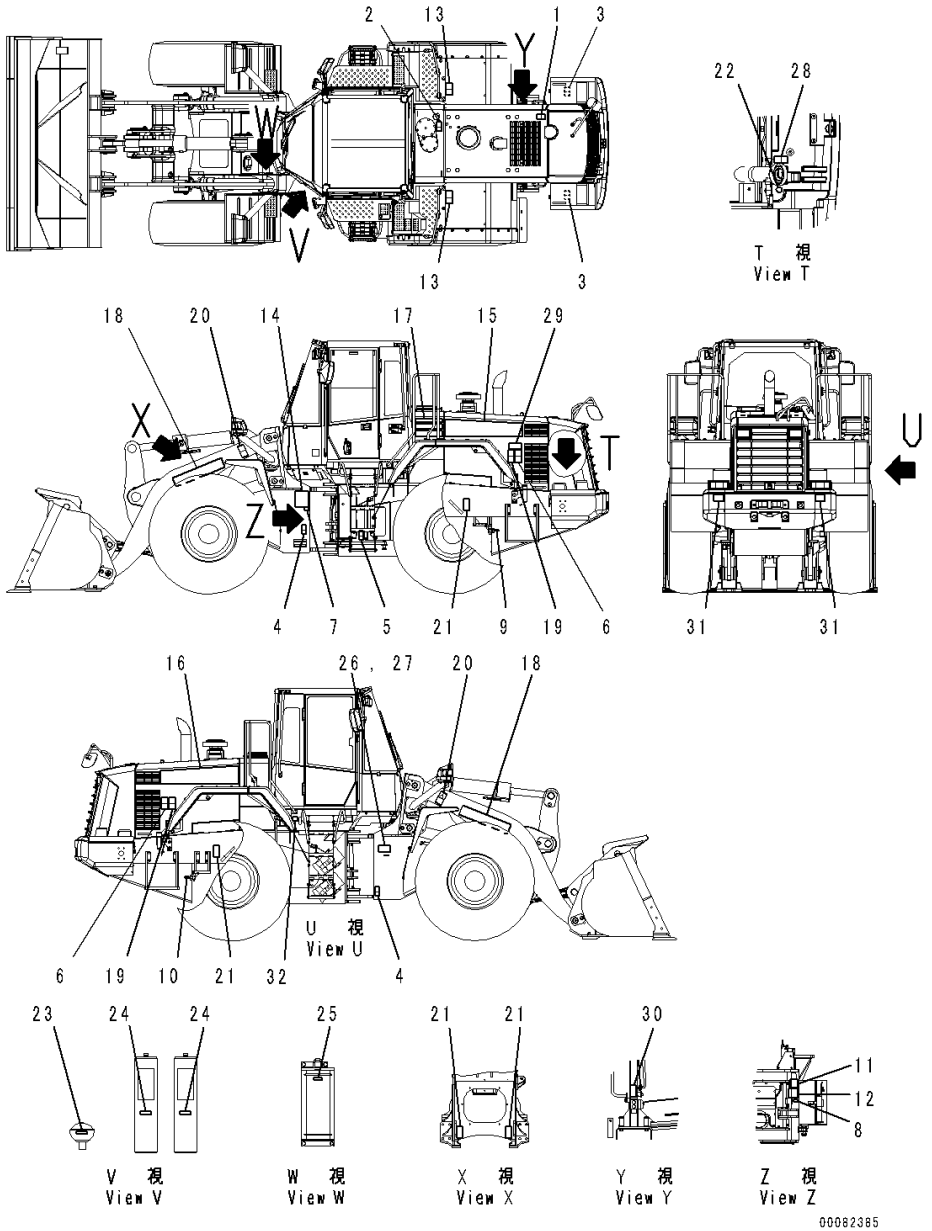

Index	Code	Part Number	Description	Qty	Serial Number
32		09642-13000	Plate, Service Instruction, Engine Coolant AF-NAC	1	90216-

FIG. U0100-017002 Marks and Plates (Interior)

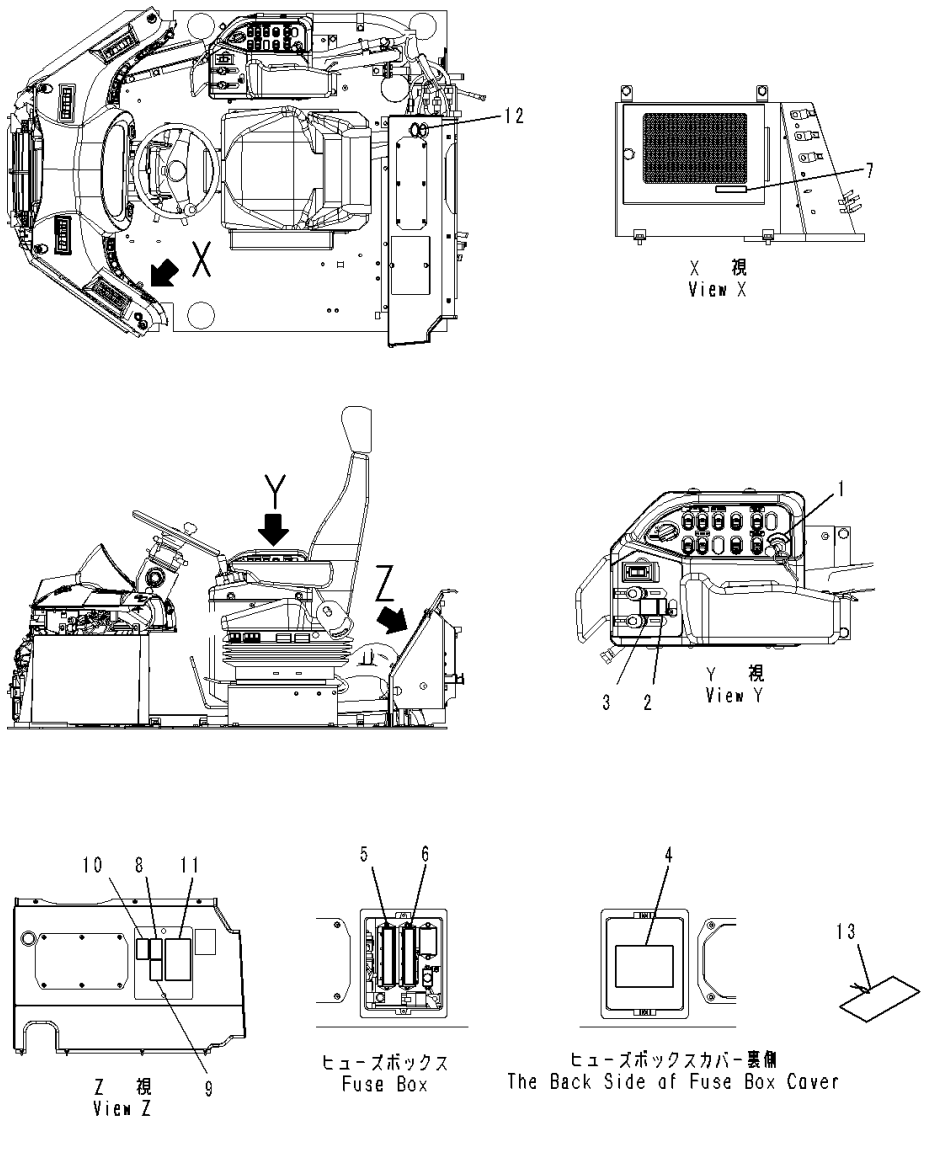

Index	Code	Part Number	Description	Qty	Serial Number
		Note: This list covers following specifications.			
		English			
		English, For India CMVR Regulation Arrangement			
		423-93-41152	Plate Assembly	1	90216-
1	C1		• Plate, Main Switch	1	90216-
2	C1		• Plate, Work Equipment Lever Lock	1	90216-
3	C1		• Plate, Work Equipment Pattern	1	90216-
4	C1		• Plate, Relay	1	90216-
5	C1		• Plate, Fuse (2)	1	90216-
6	C1		• Plate, Fuse (1)	1	90216-
7	C1		• Plate, Air Conditioner Filter	1	90216-
8		09651-A0481	• Plate, Warning, Read Manual Before Operating	1	90216-
9		09654-C0481	• Plate, Warning, Before Leaving Seat	1	90216-
10		09801-C0481	• Plate, Danger, High Voltage Hazard	1	90216-
11		09802-33000	• Plate, Warning, Before Operating and Traveling	1	90216-
12		22U-00-21510	Plate, 12volt Socket	1	90216-
13		09963-A1640	Tag, Danger, Do Not Operate	1	90216-

FIG. U0100-030001 Marks and Plates (English, For EU Specification) (Exterior)

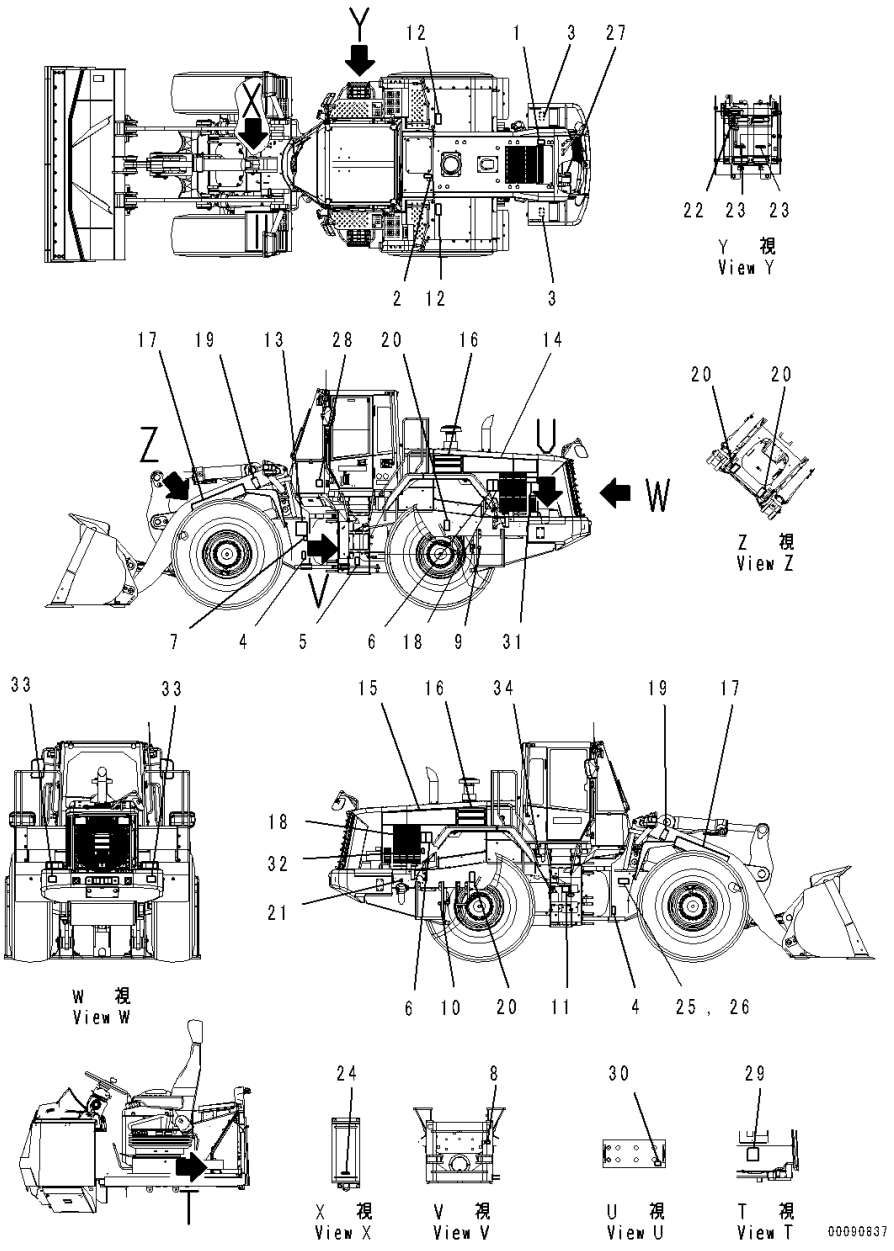

Index	Code	Part Number	Description	Qty	Serial Number
		426-93-21570	Plate Assembly	1	90780-
1		09653-A0641	• Plate, Warning, High Temperature	1	90780-
2		09653-A0641	• Plate, Warning, High Temperature	1	90780-
3		09808-A1201	• Plate, Warning, Battery Cables	2	90780-
4		09162-C0641	• Plate, Danger, Keep Off	2	90780-
5		09161-C0641	• Plate, Warning, Articulation Lock	1	90780-
6		09667-A0880	• Plate, Caution, Rotating Object	2	90780-
		423-93-41370	Plate Assembly	1	90780-
7	C1		• Plate, Remote Grease, Cylinder	1	90780-
8	C1		• Plate, Remote Grease, Rear Axle	1	90780-
9	C1		• Plate, Radiator Drain	1	90780-
10	C1		• Plate, Engine Oil Drain	1	90780-
11	C1		• Plate, Parking Brake Emergency Release Method	1	90780-
12		09805-C0881	• Plate, Caution, Do not Get On	2	90780-
13		421-93-41310	Oil Chart	1	90780-
14		421-93-42240	Plate, Machine Model, WA470	1	90780-
15		421-93-42250	Plate, Machine Model, WA470	1	90780-
16		421-93-42230	Plate, Stripe	2	90780-
17		09690-P0900	Plate, Komatsu Logo	2	90780-
18		09806-C0883	Plate, Danger, Keep Away from Machine .	2	90780-
19		09807-C0883	Plate, Danger, Keep Out under Work Equipment	2	90780-
20		09960-01601	Mark, Lift Point and Tie Down Point Marks	4	90780-
21		09669-0000E	Plate, Symbol, Fuel Filler	1	90780-
22		09659-A057B	Plate, Warning, Explosion Hazard	1	90780-
23		09659-A057B	Plate, Warning, Explosion Hazard	2	90780-
24		09659-A057B	Plate, Warning, Explosion Hazard	1	90780-
25	C2	09602-00003	Plate, Name (Limited Supply)	1	90780-
26		04418-13060	Screw	4	90780-
27		09667-A0481	Plate, Caution, Rotating Object	1	90780-
28		09696-40107	Plate, Noise Level, for EU	1	90780-
29		09696-50072	Plate, Noise Level, for EU	1	90780-
30		09664-62A11	Plate, Danger, Battery	2	90780-
31		20Y-00-41530	Plate, Symbol, Ecot3	1	90780-
32		134-98-71420	Plate, Pre Filter Caution	1	90780-
33		14X-98-35181	Plate, Reflector	2	90780-
34		09642-A0480	Plate, Service Instruction	1	90780-

FIG. U0100-030002 Marks and Plates (Interior)

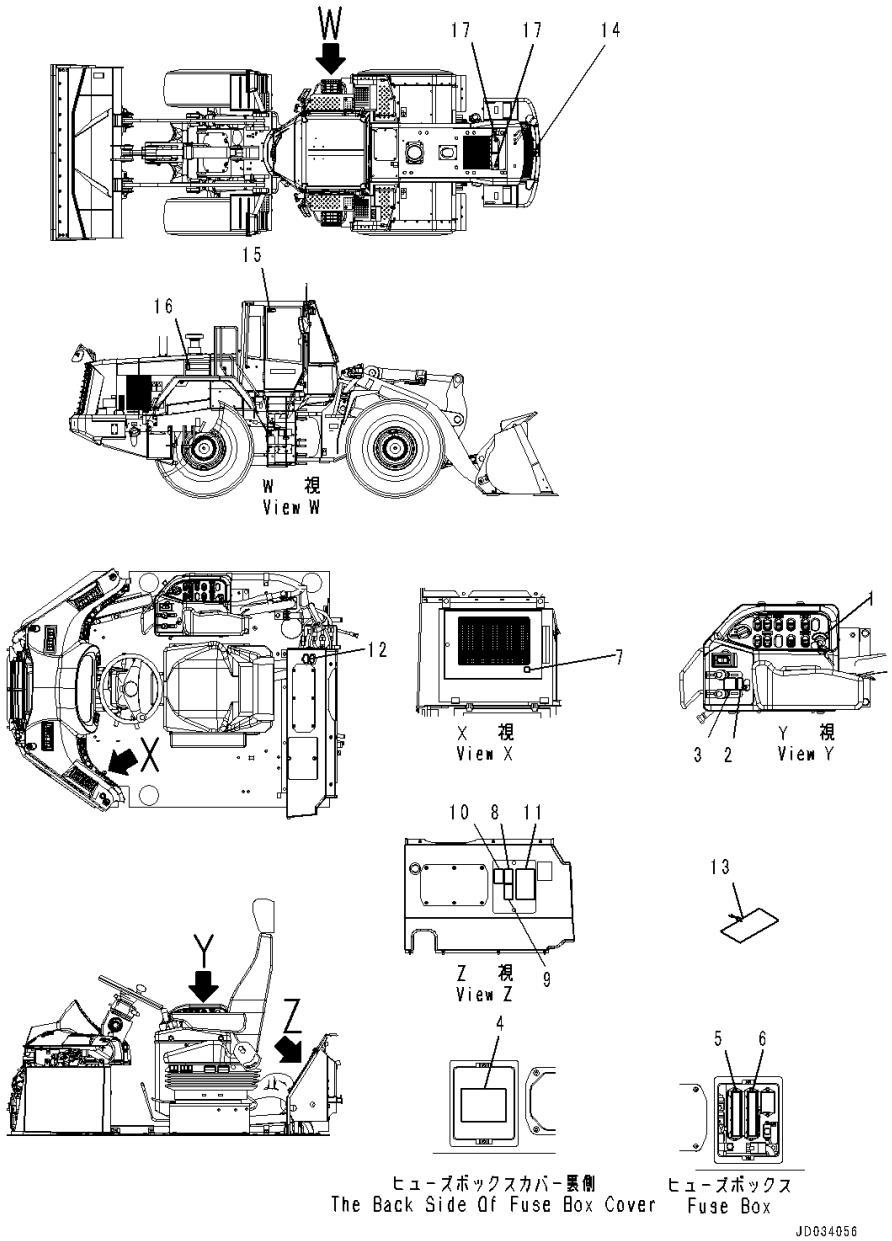

Index	Code	Part Number	Description	Qty	Serial Number
		Note: This list covers following specifications.			
		English, For EU Specification			
		English, With Large Capacity Battery, For EU Specification			
		423-93-41450	Plate Assembly	1	90780-
1	C1		• Plate, Main Switch	1	90780-
2	C1		• Plate, Work Equipment Lever Lock	1	90780-
3	C1		• Plate, Work Equipment Pattern	1	90780-
4	C1		• Plate, Relay	1	90780-
5	C1		• Plate, Fuse (1)	1	90780-
6	C1		• Plate, Fuse (2)	1	90780-
7	C1		• Plate, Air Conditioner Filter	1	90780-
8		09651-A0481	• Plate, Warning, Read Manual Before Operating	1	90780-
9		09654-C0481	• Plate, Warning, Before Leaving Seat	1	90780-
10		09801-C0481	• Plate, Danger, High Voltage Hazard	1	90780-
11		09802-D0880	Plate, Warning, Before Operating and Traveling	1	90780-
12		22U-00-21511	Plate, 12volt Socket	1	90780-
13		09963-A1640	Tag, Danger, Do Not Operate	1	90780-
14		421-93-41390	Plate, Tow Hook	1	90780-
15		09659-A0641	Plate, Warning, Explosion Hazard	1	90780-
16		09659-A0641	Plate, Warning, Explosion Hazard	4	90780-
17		23B-53-71190	Plate, Caution, Radiator Cap	2	90780-

FIG. U0100-034001 Marks and Plates (English, With Large Capacity Battery, For EU Specification) (Exterior)

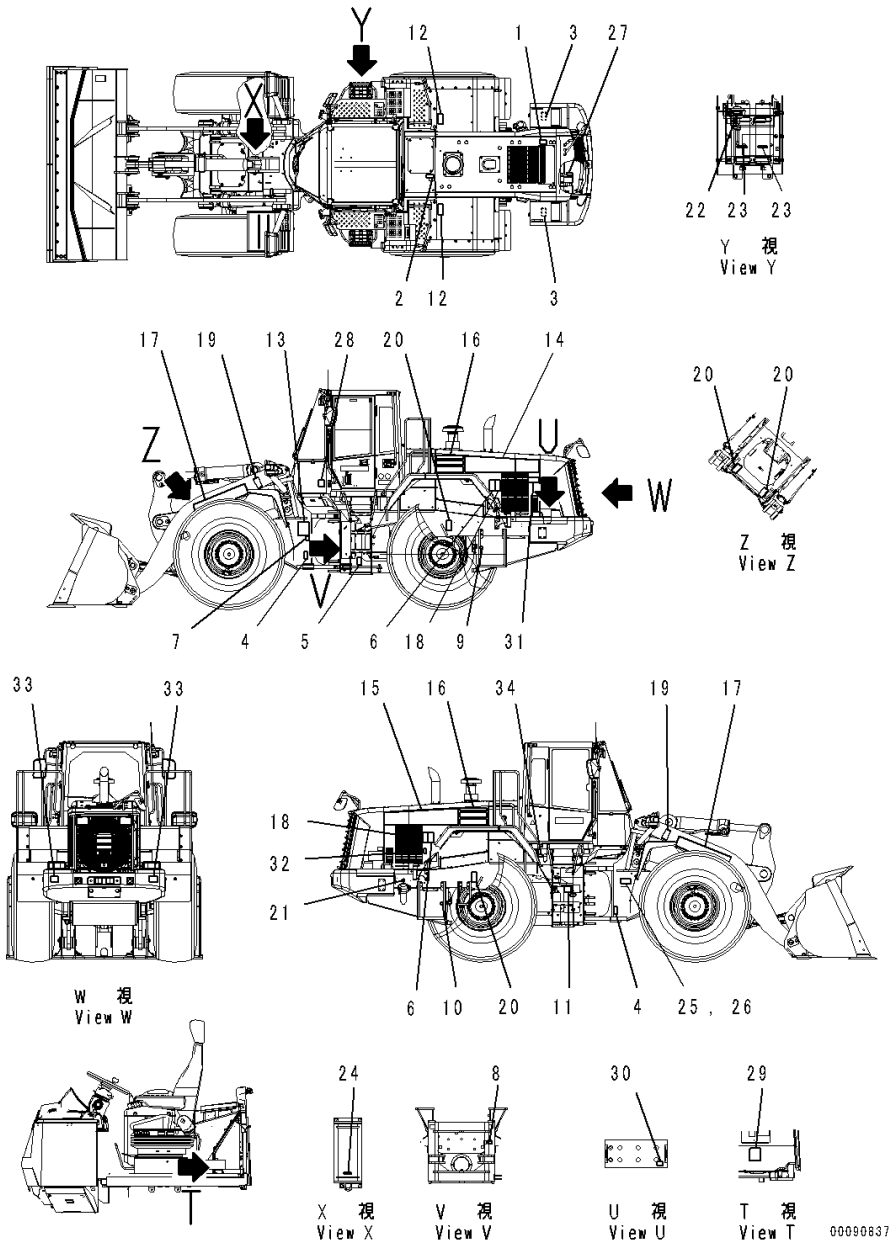

Index	Code	Part Number	Description	Qty	Serial Number
		426-93-21570	Plate Assembly	1	90780-
1		09653-A0641	• Plate, Warning, High Temperature	1	90780-
2		09653-A0641	• Plate, Warning, High Temperature	1	90780-
3		09808-A1201	• Plate, Warning, Battery Cables	2	90780-
4		09162-C0641	• Plate, Danger, Keep Off	2	90780-
5		09161-C0641	• Plate, Warning, Articulation Lock	1	90780-
6		09667-A0880	• Plate, Caution, Rotating Object	2	90780-
		423-93-41370	Plate Assembly	1	90780-
7	C1		• Plate, Remote Grease, Cylinder	1	90780-
8	C1		• Plate, Remote Grease, Rear Axle	1	90780-
9	C1		• Plate, Radiator Drain	1	90780-
10	C1		• Plate, Engine Oil Drain	1	90780-
11	C1		• Plate, Parking Brake Emergency Release Method	1	90780-
12		09805-C0881	• Plate, Caution, Do not Get On	2	90780-
13		421-93-41310	Oil Chart	1	90780-
14		421-93-42240	Plate, Machine Model, WA470	1	90780-
15		421-93-42250	Plate, Machine Model, WA470	1	90780-
16		421-93-42230	Plate, Stripe	2	90780-
17		09690-P0900	Plate, Komatsu Logo	2	90780-
18		09806-C0883	Plate, Danger, Keep Away from Machine .	2	90780-
19		09807-C0883	Plate, Danger, Keep Out under Work Equipment	2	90780-
20		09960-01601	Mark, Lift Point and Tie Down Point Marks	4	90780-
21		09669-0000E	Plate, Symbol, Fuel Filler	1	90780-
22		09659-A057B	Plate, Warning, Explosion Hazard, PPC Accumulator	1	90780-
23		09659-A057B	Plate, Warning, Explosion Hazard, Brake Accumulator	2	90780-
24		09659-A057B	Plate, Warning, Explosion Hazard, ECSS Accumulator	1	90780-
25	C2	09602-00003	Plate, Name (Limited Supply)	1	90780-
26		04418-13060	Screw	4	90780-
27		09667-A0481	Plate, Caution, Rotating Object	1	90780-
28		09696-40107	Plate, Noise Level, for EU	1	90780-
29		09696-50072	Plate, Noise Level, for EU	1	90780-
30		09664-62D11	Plate, Danger, Battery	2	90780-
31		20Y-00-41530	Plate, Symbol, Ecot3	1	90780-
32		134-98-71420	Plate, Pre Filter Caution	1	90780-

FIG. U0100-034001 Marks and Plates (English, With Large Capacity Battery, For EU Specification) (Exterior)

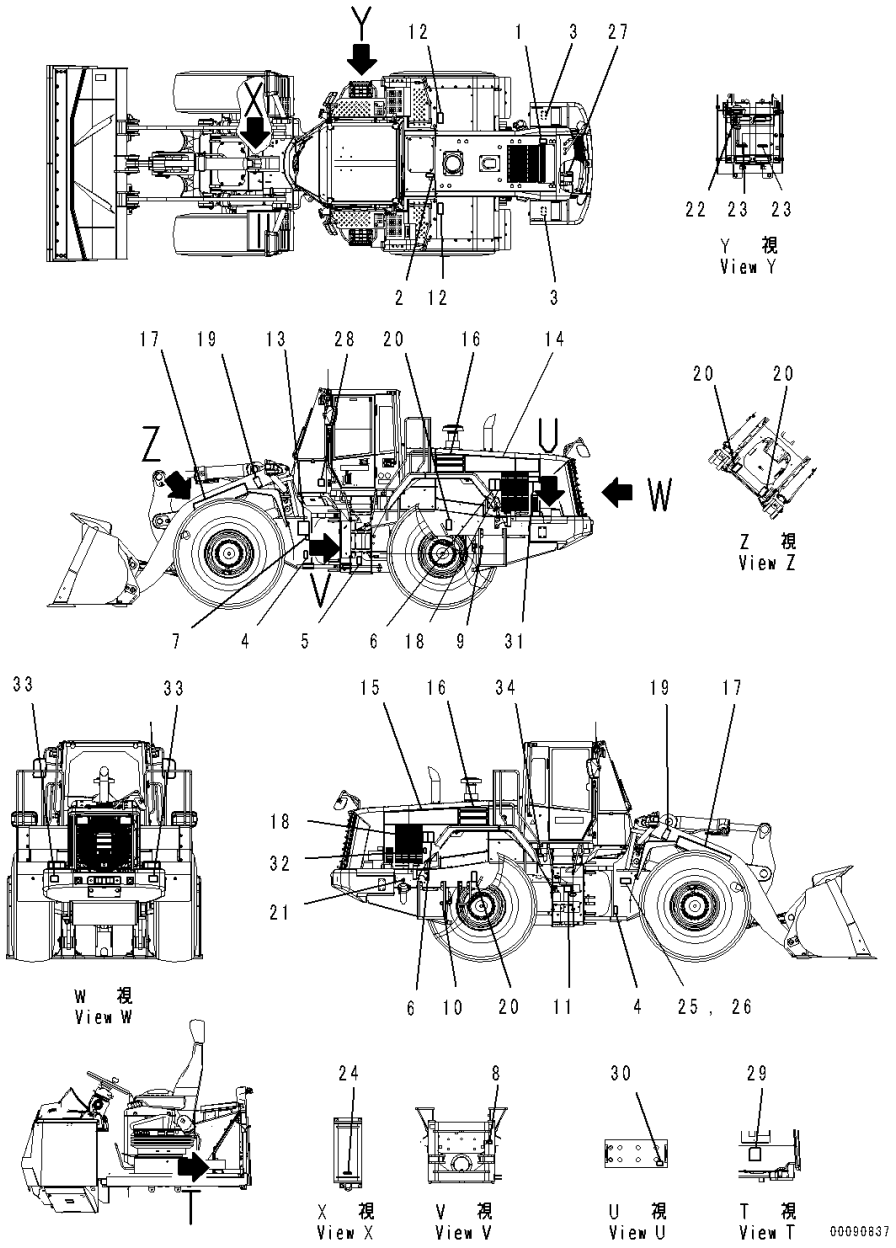

Index	Code	Part Number	Description	Qty	Serial Number
33		14X-98-35181	Plate, Reflector	2	90780-
34		09642-A0480	Plate, Service Instruction	1	90780-

FIG. U0100-033001 Marks and Plates (English, For India CMVR Regulation Arrangement) (Exterior)

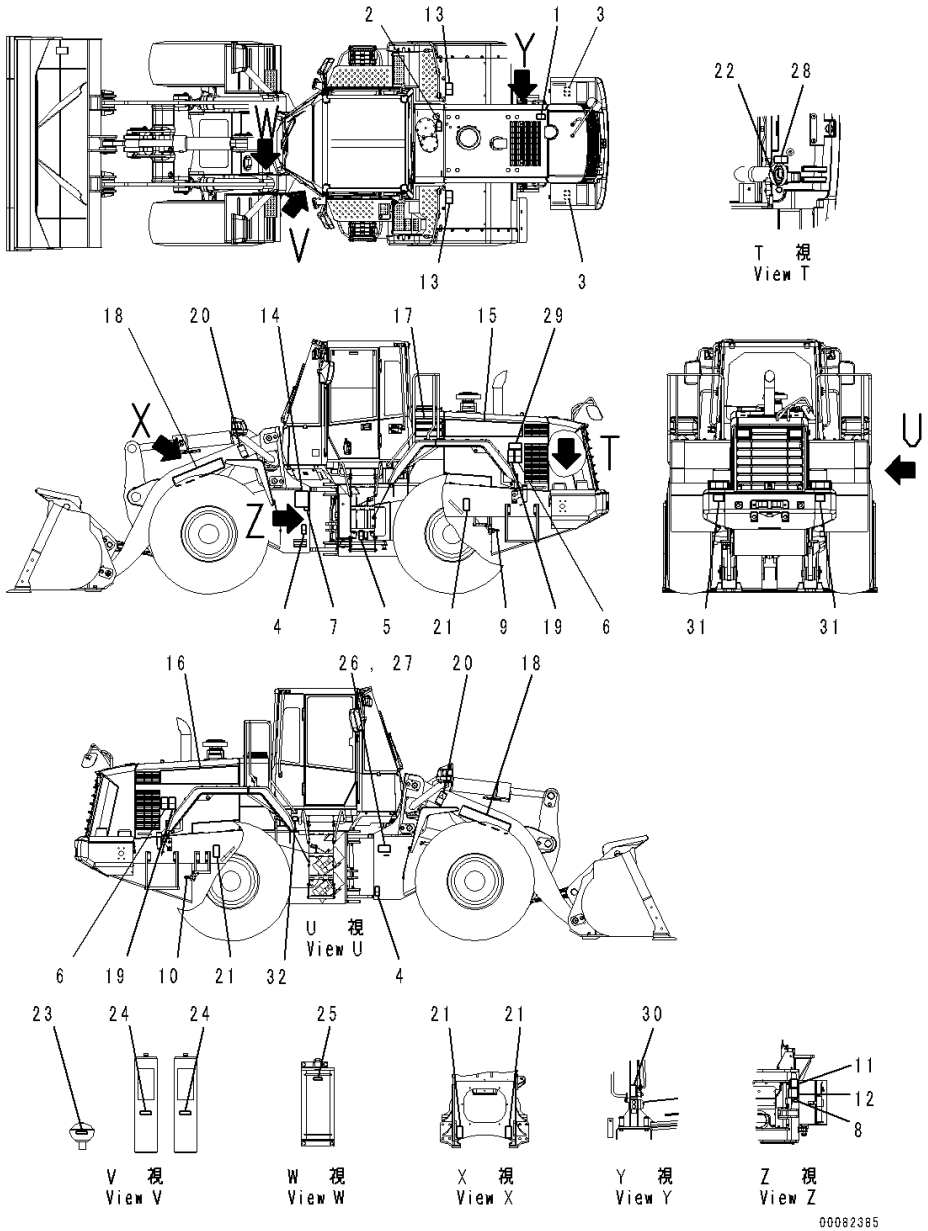

Index	Code	Part Number	Description	Qty	Serial Number
		426-93-21570	Plate Assembly	1	90216-
1		09653-A0641	• Plate, Warning, High Temperature	1	90216-
2		09653-A0641	• Plate, Warning, High Temperature	1	90216-
3		09808-A1201	• Plate, Warning, Battery Cables	2	90216-
4		09162-C0641	• Plate, Danger, Keep Off	2	90216-
5		09161-C0641	• Plate, Warning, Articulation Lock	1	90216-
6		09667-A0880	• Plate, Caution, Rotating Object	2	90216-
		423-93-41172	Plate Assembly	1	90216-
7	C1		• Plate, Remote Grease, Cylinder	1	90216-
8	C1		• Plate, Remote Grease, Rear Axle	1	90216-
9	C1		• Plate, Radiator Drain	1	90216-
10	C1		• Plate, Engine Oil Drain	1	90216-
11	C1		• Plate, Parking Brake Emergency Release Switch	1	90216-
12	C1		• Plate, Parking Brake Emergency Release Method	1	90216-
13		09805-C0881	• Plate, Caution, Do not Get On	2	90216-
14		421-93-41310	Oil Chart	1	90216-
15		421-93-42240	Plate, Machine Model, WA470	1	90216-
16		421-93-42250	Plate, Machine Model, WA470	1	90216-
17		421-93-42230	Plate, Stripe	2	90216-
18		09690-P0900	Plate, Komatsu Logo	2	90216-
19		09806-C0883	Plate, Danger, Keep Away from Machine	2	90216-
20		09807-C0883	Plate, Danger, Keep Out under Work Equipment	2	90216-
21		09960-01601	Mark, Lift Point and Tie Down Point Marks	4	90216-
22		09669-0000E	Plate, Symbol, Fuel Filler	1	90216-
23		09659-A057B	Plate, Warning, Explosion Hazard	1	90216-
24		09659-A057B	Plate, Warning, Explosion Hazard	2	90216-
25		09659-A057B	Plate, Warning, Explosion Hazard	1	90216-
26	C2	09602-14000	Plate, Name (Limited Supply)	1	90216-
27		04418-13060	Screw	4	90216-
28		09667-A0481	Plate, Caution, Rotating Object	1	90216-
29		20Y-00-41530	Plate, Symbol, Ecot3	1	90216-
30		20Y-00-41340	Plate, Pre Filter Caution	1	90216-
31		14X-98-35181	Plate, Reflector	2	90216-
32		09642-13000	Plate, Service Instruction, Engine Coolant AF-NAC	1	90216-

FIG. U0100-021001 Marks and Plates (English, Text Type) (Exterior)

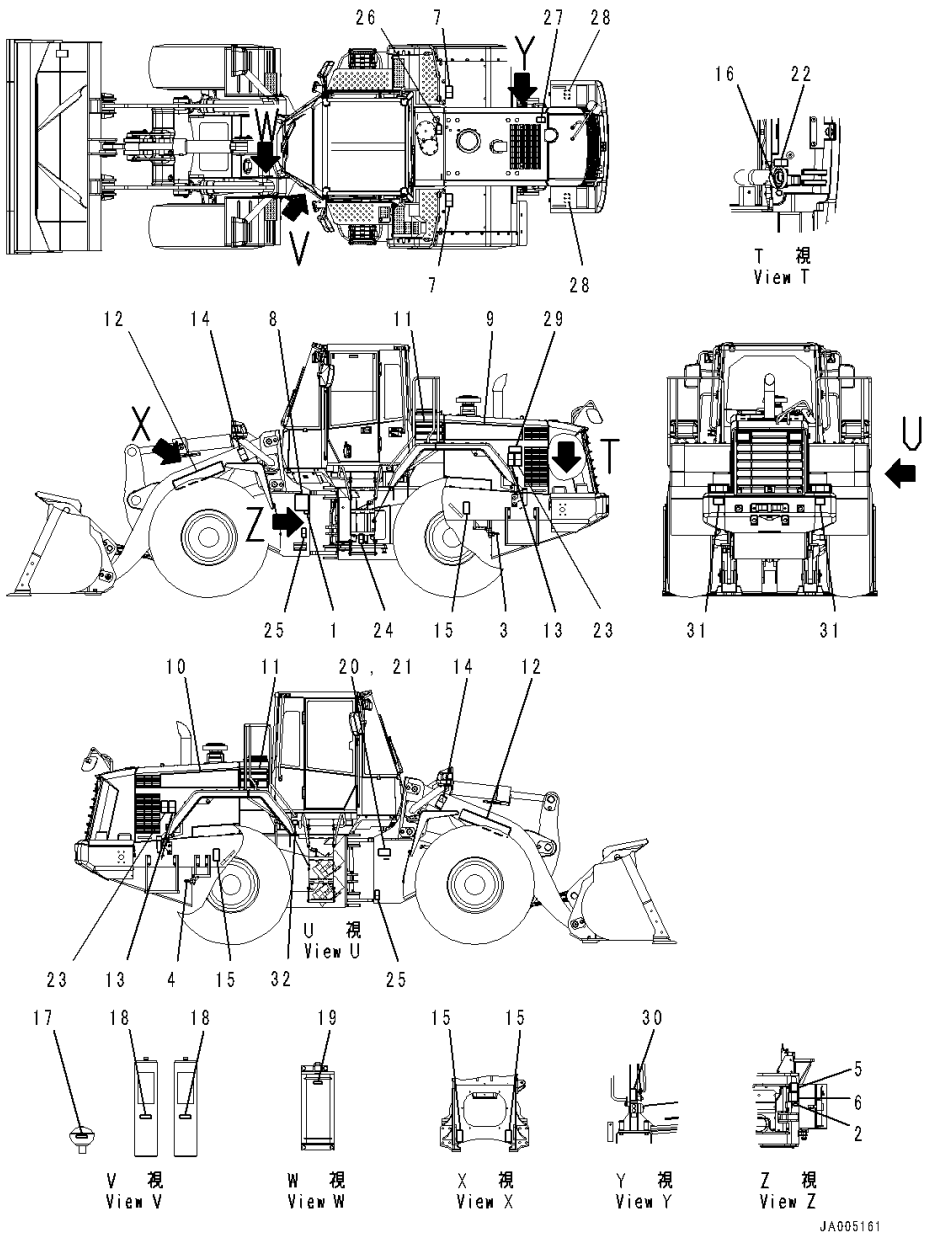

Index	Code	Part Number	Description	Qty	Serial Number
		423-93-41311	Plate Assembly	1	90216-
1	C1		• Plate, Remote Grease, Cylinder	1	90216-
2	C1		• Plate, Remote Grease, Rear Axle	1	90216-
3	C1		• Plate, Radiator Drain	1	90216-
4	C1		• Plate, Engine Oil Drain	1	90216-
5	C1		• Plate, Parking Brake Emergency Release Method	1	90216-
6	C1		• Plate, Warning, Parking Brake Emergency Release	1	90216-
7		09805-03000	• Plate, Caution, Fender	2	90216-
8		421-93-41310	Oil Chart	1	90216-
9		421-93-42240	Plate, Machine Model, WA470	1	90216-
10		421-93-42250	Plate, Machine Model, WA470	1	90216-
11		421-93-42230	Plate, Stripe	2	90216-
12		09690-P0900	Plate, Komatsu Logo	2	90216-
13		09812-13000	Plate, Danger, Keep a Safe Distance	2	90216-
14		09807-C0883	Plate, Danger, Keep Out under Work Equipment	2	90216-
15		09960-01601	Mark, Lift Point and Tie Down Point Marks	4	90216-
16		09669-0000E	Plate, Symbol, Fuel Filler	1	90216-
17		09659-53000	Plate, Warning, Explosion Hazard, PPC Accumulator	1	90216-
18		09659-53000	Plate, Warning, Explosion Hazard, Brake Accumulator	2	90216-
19		09659-53000	Plate, Warning, Explosion Hazard, ECSS Accumulator	1	90216-
20	C2	09602-10001	Plate, Name (Limited Supply)	1	90216-
21		04418-13060	Screw	4	90216-
22		09667-03001	Plate, Caution, Rotating Object	1	90216-
23		09667-03001	Plate, Caution, Rotating Object	2	90216-
24		09161-23000	Plate, Warning, Articulation Lock	1	90216-
25		09162-23000	Plate, Danger, Keep Off	2	90216-
26		09653-03001	Plate, Warning, High Temperature	1	90216-
27		09668-03001	Plate, Warning, Hot Water	1	90216-
28		09808-03000	Plate, Warning, Battery Cables	2	90216-
29		20Y-00-41530	Plate, Symbol, Ecot3	1	90216-
30		20Y-00-41340	Plate, Pre Filter Caution	1	90216-
31		14X-98-35181	Plate, Reflector	2	90216-

FIG. U0100-021001 Marks and Plates (English, Text Type) (Exterior)

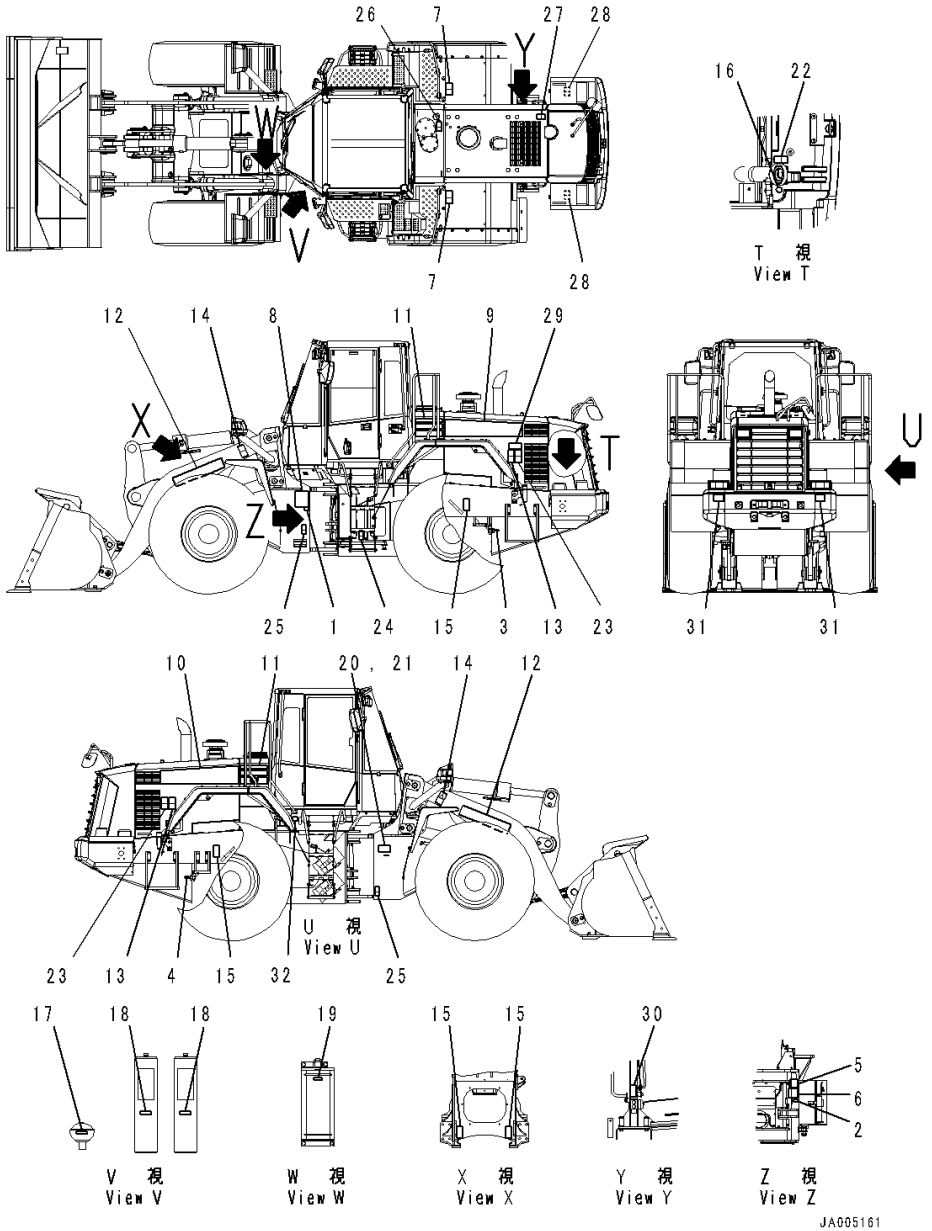

Index	Code	Part Number	Description	Qty	Serial Number
32		09642-13000	Plate, Service Instruction, Engine Coolant AF-NAC	1	90216-

FIG. U0100-021002 Marks and Plates (Interior)

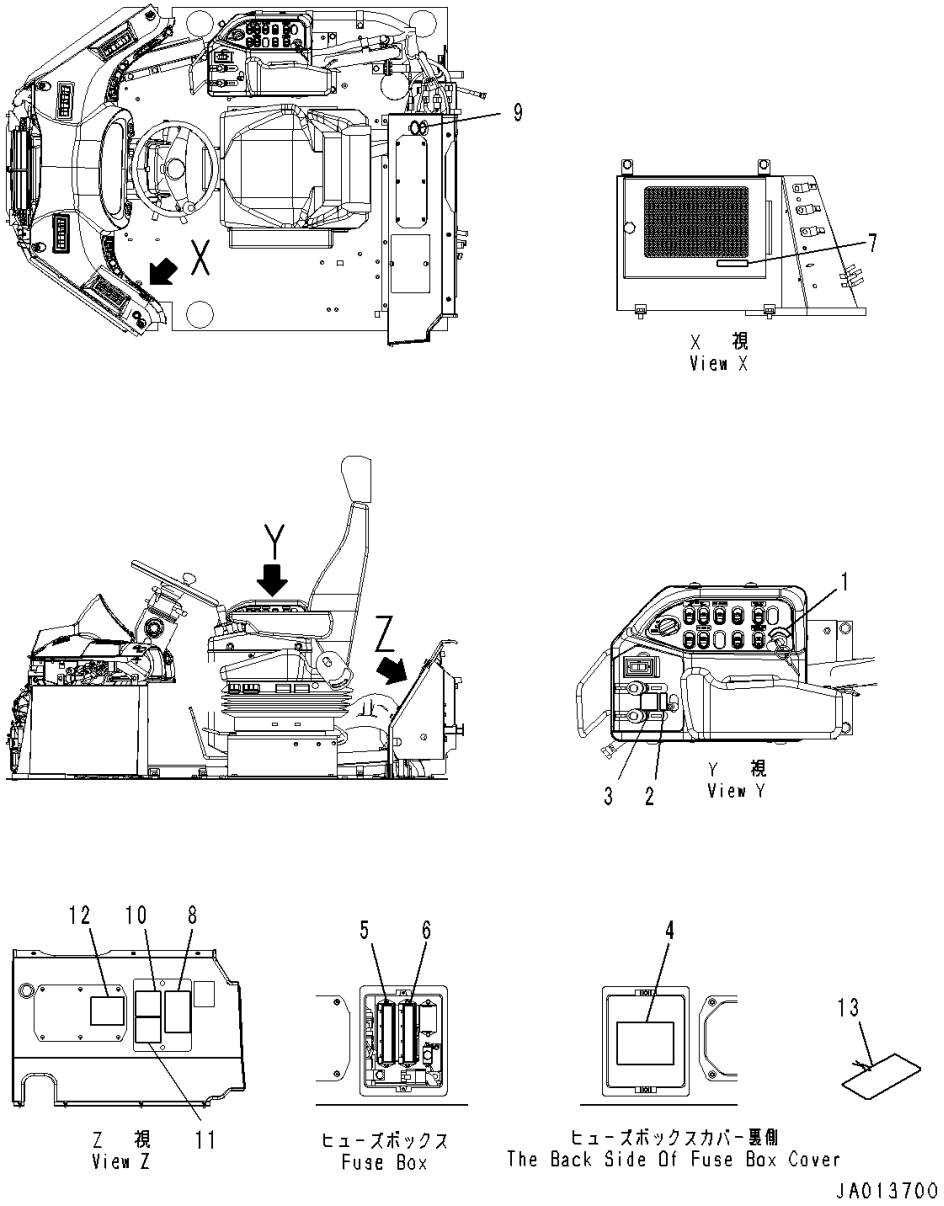

Index	Code	Part Number	Description	Qty	Serial Number
		Note: This list covers following specifications.			
		English, Text Type			
		English, USA and Puerto Rico			
		423-93-41152	Plate Assembly	1	90216-
1	C1		• Plate, Main Switch	1	90216-
2	C1		• Plate, Work Equipment Lever Lock	1	90216-
3	C1		• Plate, Work Equipment Pattern	1	90216-
4	C1		• Plate, Relay	1	90216-
5	C1		• Plate, Fuse (2)	1	90216-
6	C1		• Plate, Fuse (1)	1	90216-
7	C1		• Plate, Air Conditioner Filter, Fuse (1)	1	90216-
8		09802-33000	• Plate, Warning, Before Operating and Traveling	1	90216-
9		22U-00-21510	Plate, 12volt Socket	1	90216-
10		09651-03001	Plate, Warning, Read Manual Before Operating, Safety	1	90216-
11		09654-03001	Plate, Warning, Before Leaving Seat	1	90216-
12		09801-13001	Plate, Danger, High Voltage Hazard	1	90216-
13		09963-03001	Tag, Danger, Do Not Operate	1	90216-

FIG. U0100-015001 Marks and Plates (English, USA and Puerto Rico) (Exterior)

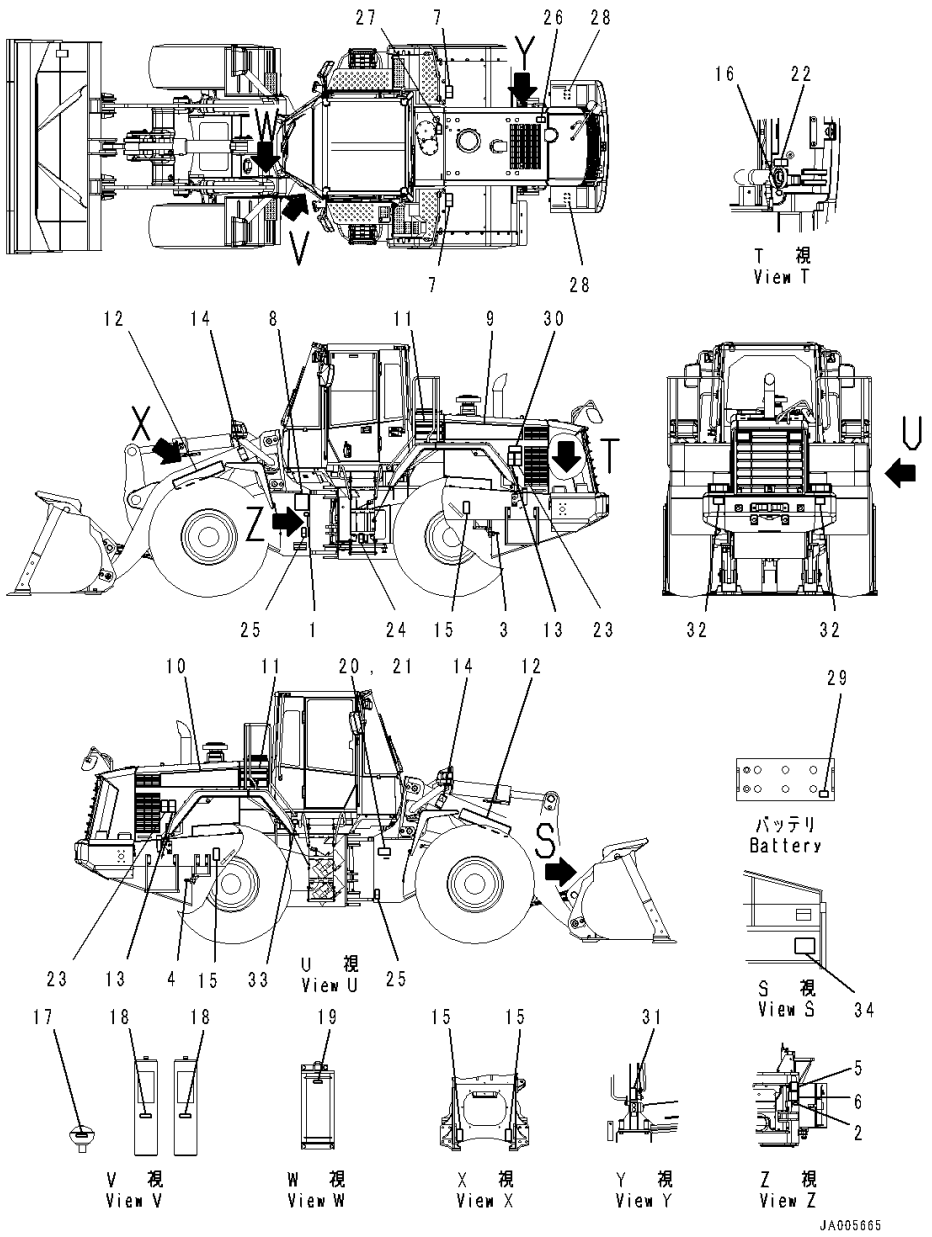

Index	Code	Part Number	Description	Qty	Serial Number
		423-93-41311	Plate Assembly	1	90216-
1	C1		• Plate, Remote Grease, Cylinder	1	90216-
2	C1		• Plate, Remote Grease, Rear Axle	1	90216-
3	C1		• Plate, Radiator Drain	1	90216-
4	C1		• Plate, Engine Oil Drain	1	90216-
5	C1		• Plate, Parking Brake Emergency Release Method	1	90216-
6	C1		• Plate, Warning, Parking Brake Emergency Release	1	90216-
7		09805-03000	• Plate, Caution, Fender	2	90216-
8		421-93-41310	Oil Chart	1	90216-
9		421-93-42240	Plate, Machine Model, WA470	1	90216-
10		421-93-42250	Plate, Machine Model, WA470	1	90216-
11		421-93-42230	Plate, Stripe, Stripe	2	90216-
12		09690-P0900	Plate, Komatsu Logo	2	90216-
13		09812-13000	Plate, Danger, Keep a Safe Distance	2	90216-
14		09807-C0883	Plate, Danger, Keep Out under Work Equipment	2	90216-
15		09960-01601	Mark, Lift Point and Tie Down Point Marks	4	90216-
16		09669-0000E	Plate, Symbol, Fuel Filler	1	90216-
17		09659-53000	Plate, Warning, Explosion Hazard, Safety, PPC Accumulator	1	90216-
18		09659-53000	Plate, Warning, Explosion Hazard, Safety, Brake Accumulator	2	90216-
19		09659-53000	Plate, Warning, Explosion Hazard, Safety, ECSS Accumulator	1	90216-
20	C2	09602-10001	Plate, Name (Limited Supply)	1	90216-
21		04418-13060	Screw	4	90216-
22		09667-03001	Plate, Caution, Rotating Object	1	90216-
23		09667-03001	Plate, Caution, Rotating Object	2	90216-
24		09161-23000	Plate, Warning, Articulation Lock	1	90216-
25		09162-23000	Plate, Danger, Keep Off	2	90216-
26		09653-03001	Plate, Warning, High Temperature	1	90216-
27		09668-03001	Plate, Warning, Hot Water	1	90216-
28		09808-03000	Plate, Warning, Battery Cables	2	90216-
29		09664-30011	Plate, Danger, Battery	2	90216-
30		20Y-00-41530	Plate, Symbol, Ecot3	1	90216-
31		20Y-00-41340	Plate, Pre Filter Caution	1	90216-
32		14X-98-35181	Plate, Reflector, Reflector	2	90216-

FIG. U0100-015001 Marks and Plates (English, USA and Puerto Rico) (Exterior)

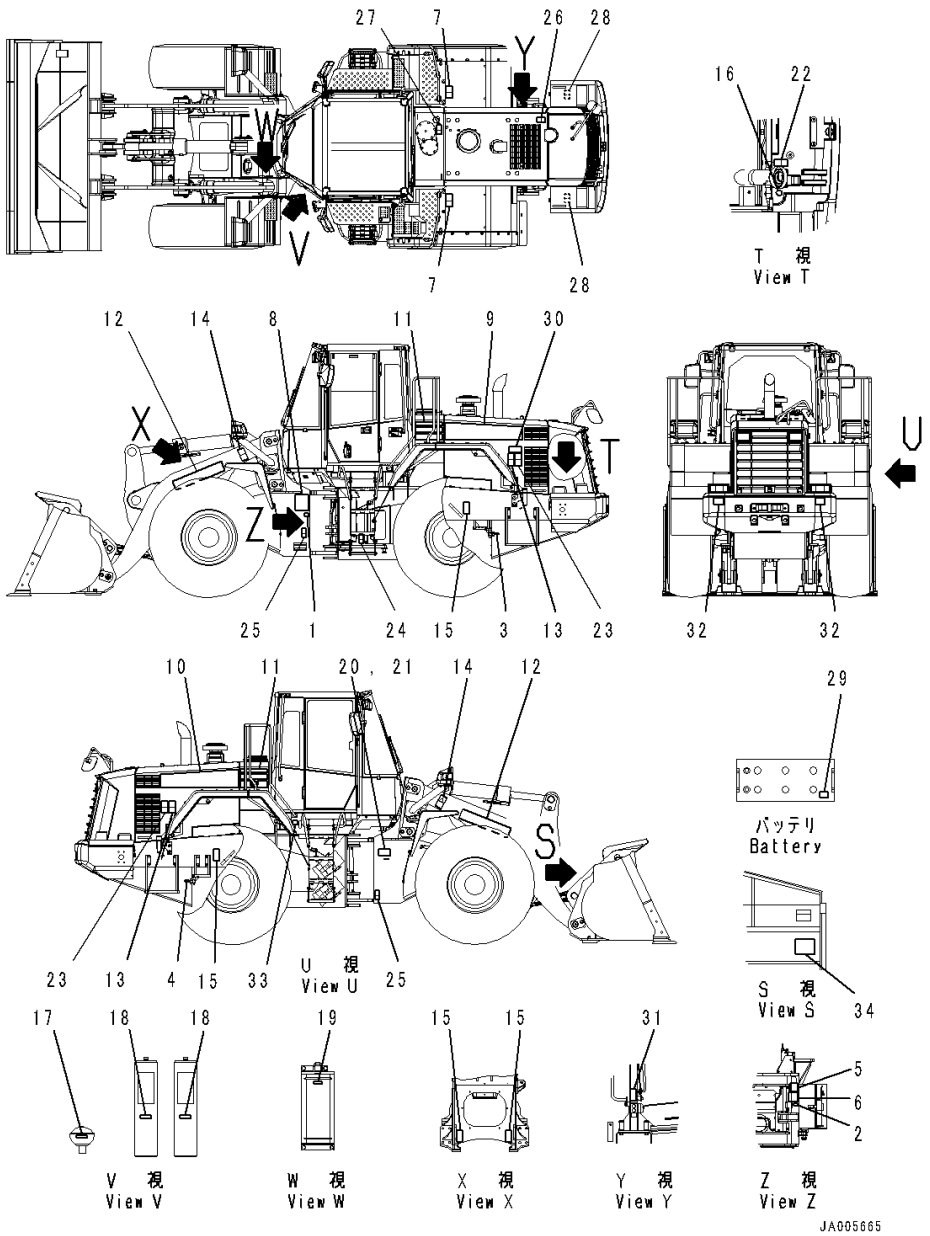

Index	Code	Part Number	Description	Qty	Serial Number
33		09642-13000	Plate, Service Instruction, Engine Coolant AF-NAC	1	90216-
34	C2	416-70-22190	Plate, Name (Limited Supply)	1	90216-

FIG. U0100-029001 Marks and Plates (English, USA and Puerto Rico, For EPA Regulations TPEM) (Exterior)

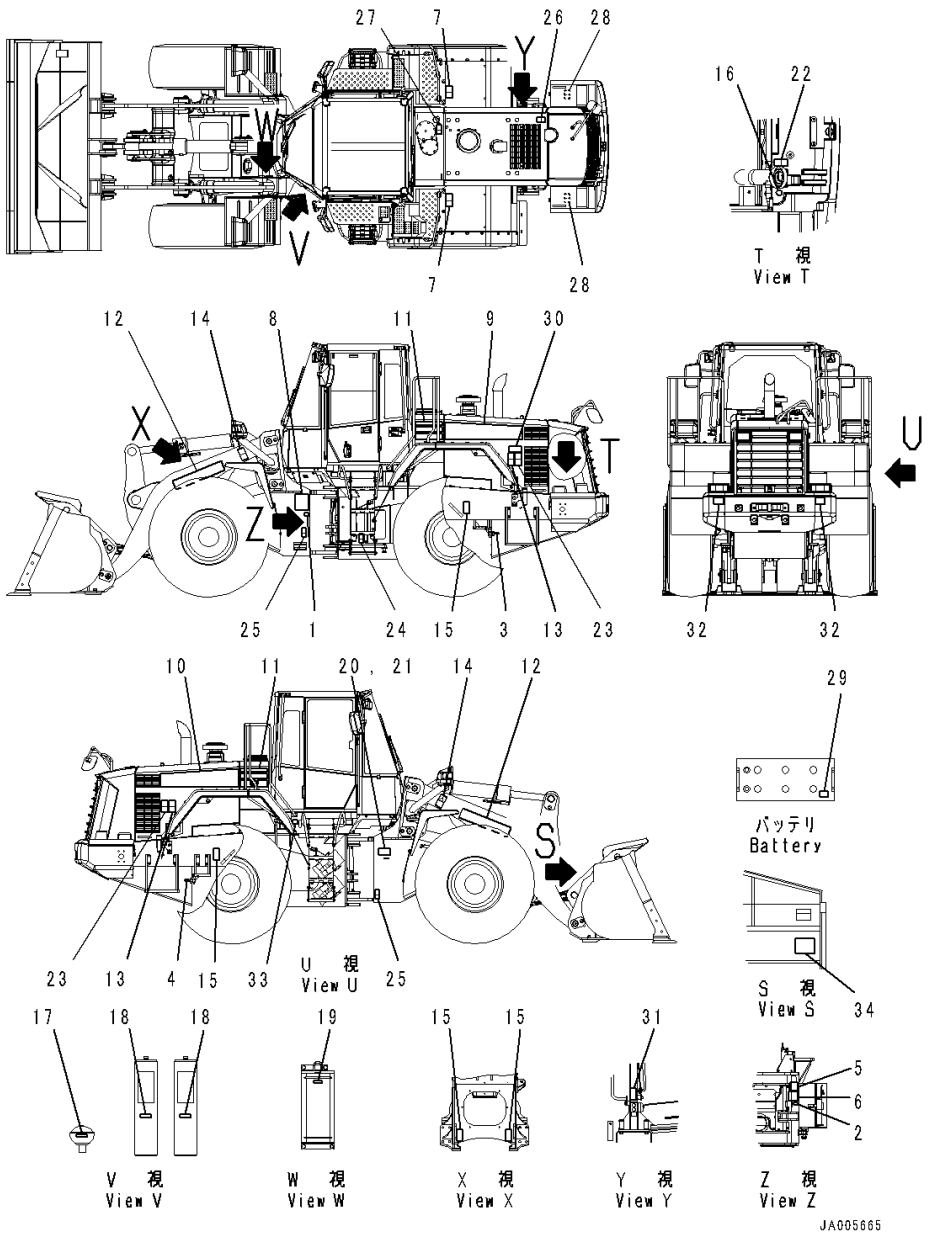

Index	Code	Part Number	Description	Qty	Serial Number
		423-93-41311	Plate Assembly	1	90216-
1	C1		• Plate, Remote Grease, Cylinder	1	90216-
2	C1		• Plate, Remote Grease, Rear Axle	1	90216-
3	C1		• Plate, Radiator Drain	1	90216-
4	C1		• Plate, Engine Oil Drain	1	90216-
5	C1		• Plate, Parking Brake Emergency Release Method	1	90216-
6	C1		• Plate, Warning, Parking Brake Emergency Release	1	90216-
7		09805-03000	• Plate, Caution, Fender	2	90216-
8		421-93-41310	Oil Chart	1	90216-
9		421-93-42240	Plate, Machine Model, WA470	1	90216-
10		421-93-42250	Plate, Machine Model, WA470	1	90216-
11		421-93-42230	Plate, Stripe, Stripe	2	90216-
12		09690-P0900	Plate, Komatsu Logo	2	90216-
13		09812-13000	Plate, Danger, Keep a Safe Distance	2	90216-
14		09807-C0883	Plate, Danger, Keep Out under Work Equipment	2	90216-
15		09960-01601	Mark, Lift Point and Tie Down Point Marks	4	90216-
16		09669-0000E	Plate, Symbol, Fuel Filler	1	90216-
17		09659-53000	Plate, Warning, Explosion Hazard, Safety, PPC Accumulator	1	90216-
18		09659-53000	Plate, Warning, Explosion Hazard, Safety, Brake Accumulator	2	90216-
19		09659-53000	Plate, Warning, Explosion Hazard, Safety, ECSS Accumulator	1	90216-
20	C2	09602-15000	Plate, Name (Limited Supply)	1	90216-
21		04418-13060	Screw	4	90216-
22		09667-03001	Plate, Caution, Rotating Object	1	90216-
23		09667-03001	Plate, Caution, Rotating Object	2	90216-
24		09161-23000	Plate, Warning, Articulation Lock	1	90216-
25		09162-23000	Plate, Danger, Keep Off	2	90216-
26		09653-03001	Plate, Warning, High Temperature	1	90216-
27		09668-03001	Plate, Warning, Hot Water	1	90216-
28		09808-03000	Plate, Warning, Battery Cables	2	90216-
29		09664-30011	Plate, Danger, Battery	2	90216-
30		20Y-00-41530	Plate, Symbol, Ecot3	1	90216-
31		20Y-00-41340	Plate, Pre Filter Caution	1	90216-
32		14X-98-35181	Plate, Reflector, Reflector	2	90216-

FIG. U0100-029001 Marks and Plates (English, USA and Puerto Rico, For EPA Regulations TPEM) (Exterior)

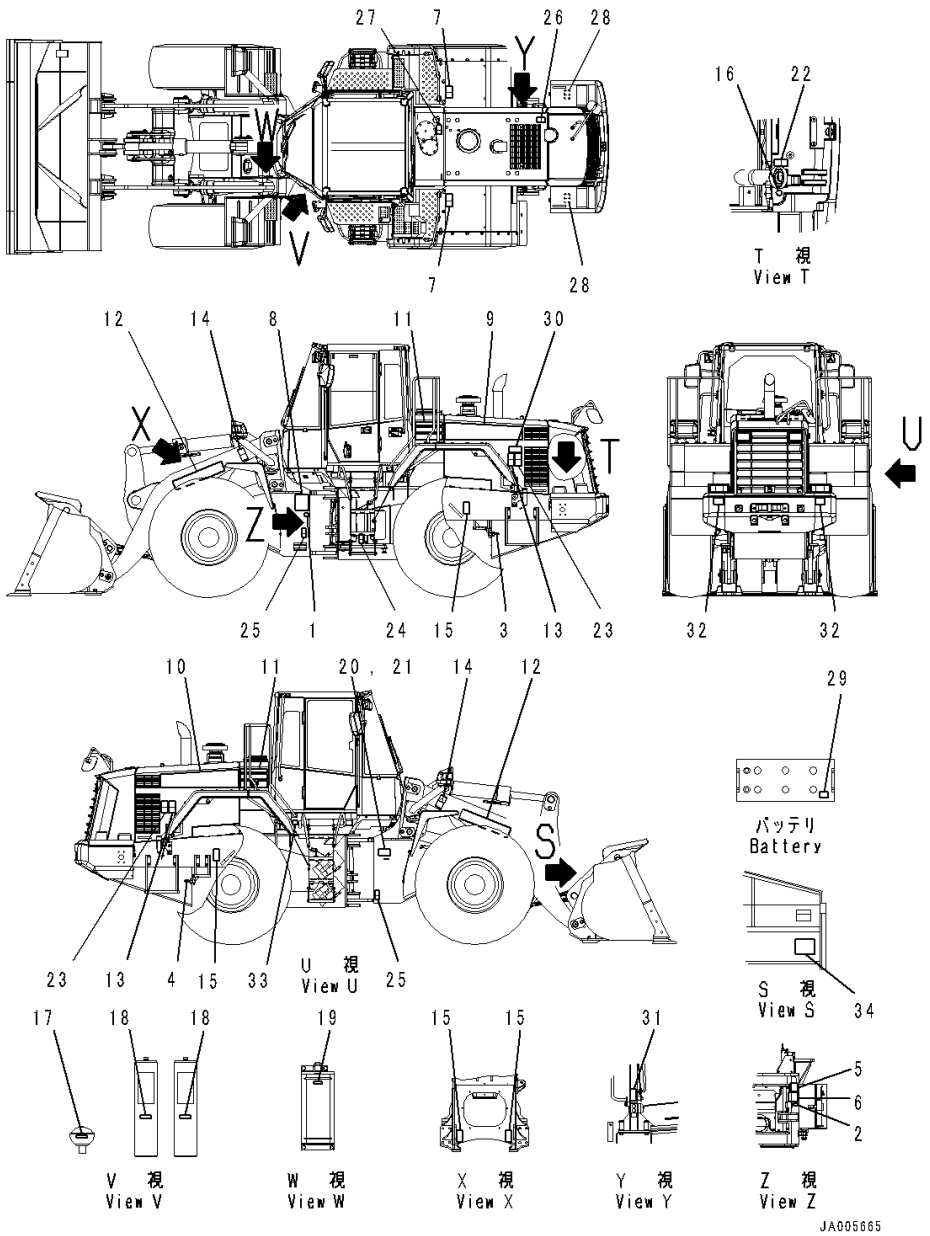

Index	Code	Part Number	Description	Qty	Serial Number
33		09642-13000	Plate, Service Instruction, Engine Coolant AF-NAC	1	90216-
34	C2	416-70-22190	Plate, Name (Limited Supply)	1	90216-

FIG. U0100-029002 Marks and Plates (English, USA and Puerto Rico, For EPA Regulations TPEM) (Interior)

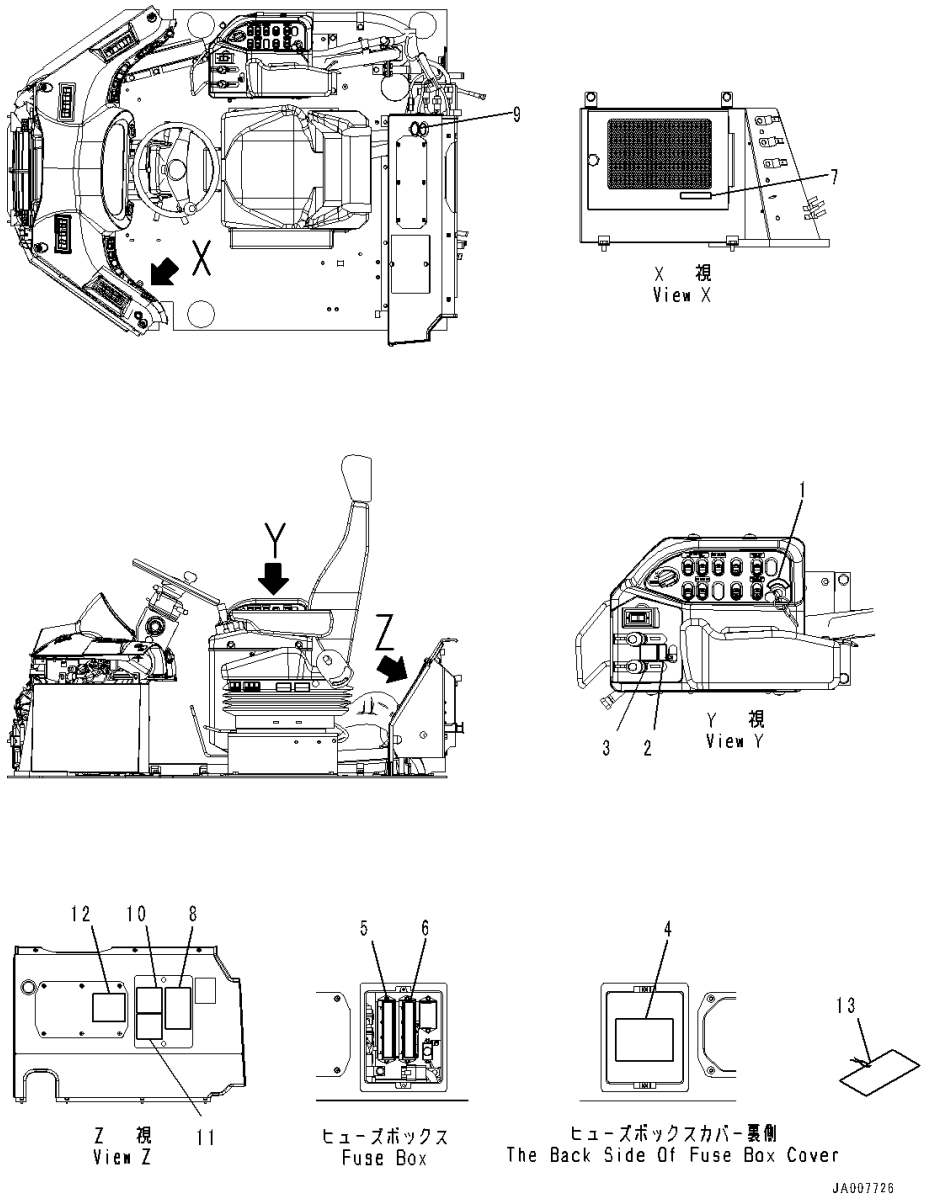

Index	Code	Part Number	Description	Qty	Serial Number
		423-93-41152	Plate Assembly	1	90216-
1	C1		• Plate, Main Switch	1	90216-
2	C1		• Plate, Work Equipment Lever Lock	1	90216-
3	C1		• Plate, Work Equipment Pattern	1	90216-
4	C1		• Plate, Relay	1	90216-
5	C1		• Plate, Fuse (2)	1	90216-
6	C1		• Plate, Fuse (1)	1	90216-
7	C1		• Plate, Air Conditioner Filter	1	90216-
8		09802-33000	• Plate, Warning, Before Operating and Traveling	1	90216-
9		22U-00-21510	Plate, 12volt Socket	1	90216-
10		09651-03001	Plate, Warning, Read Manual Before Operating, Safety	1	90216-
11		09654-03001	Plate, Warning, Before Leaving Seat	1	90216-
12		09801-13001	Plate, Danger, High Voltage Hazard	1	90216-
13		09963-03001	Tag, Danger, Do Not Operate	1	90216-

FIG. U0100-031001 Marks and Plates (Turkish-English) (Exterior)

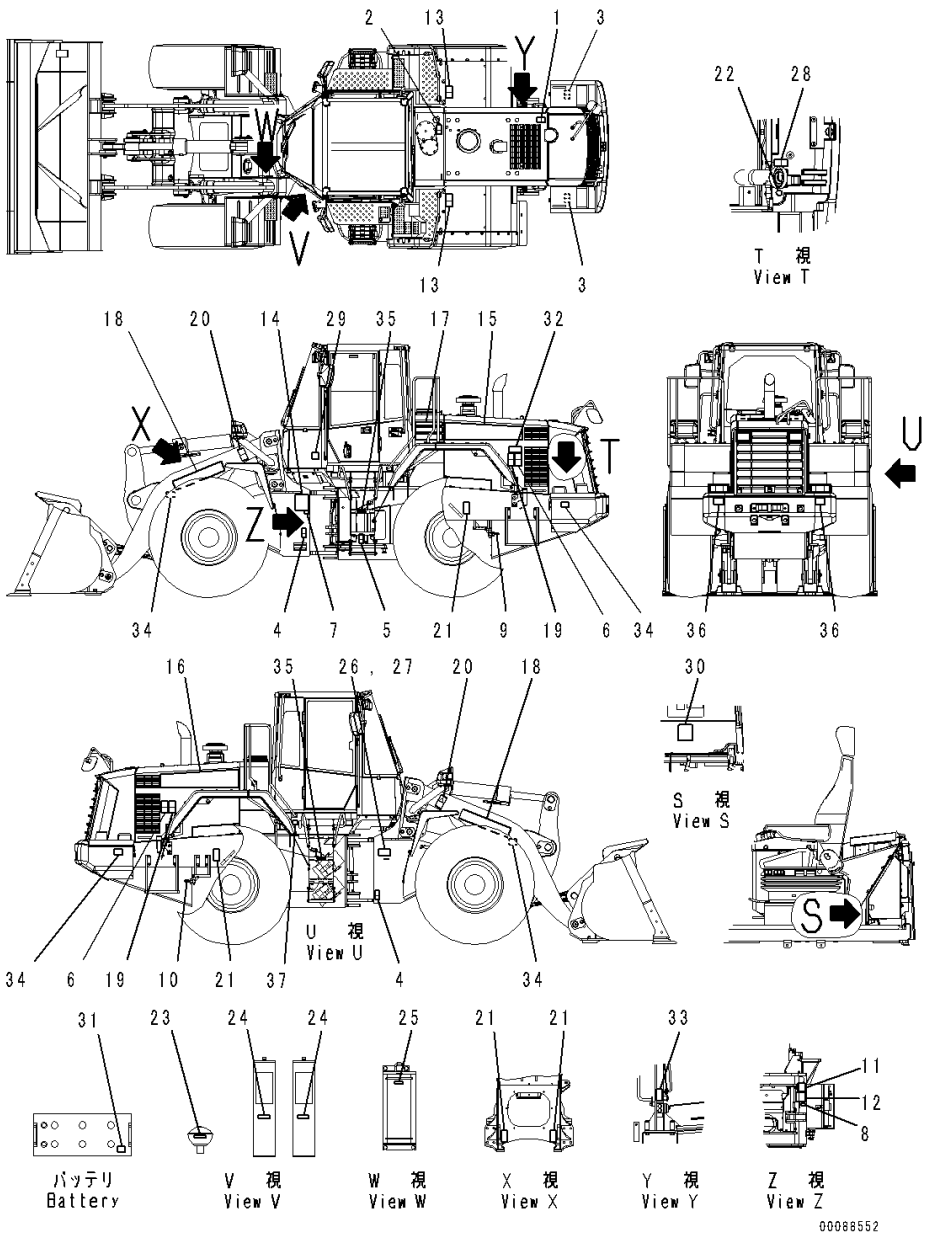

Index	Code	Part Number	Description	Qty	Serial Number
		426-93-21570	Plate Assembly	1	90780-
1		09653-A0641	• Plate, Warning, High Temperature	1	90780-
2		09653-A0641	• Plate, Warning, High Temperature	1	90780-
3		09808-A1201	• Plate, Warning, Battery Cables	2	90780-
4		09162-C0641	• Plate, Danger, Keep Off	2	90780-
5		09161-C0641	• Plate, Warning, Articulation Lock	1	90780-
6		09667-A0880	• Plate, Caution, Rotating Object	2	90780-
		423-V08-4111	Plate Assembly	1	90780-
7	C1		• Plate, Remote Grease, Cylinder	1	90780-
8	C1		• Plate, Remote Grease, Rear Axle	1	90780-
9	C1		• Plate, Radiator Drain	1	90780-
10	C1		• Plate, Engine Oil Drain	1	90780-
11	C1		• Plate, Parking Brake Emergency Release Switch	1	90780-
12	C1		• Plate, Parking Brake Emergency Release Switch	1	90780-
13		09805-C0881	• Plate, Caution, Do not Get On	2	90780-
14		421-93-41310	Oil Chart	1	90780-
15		421-93-42240	Plate, Machine Model, WA470	1	90780-
16		421-93-42250	Plate, Machine Model, WA470	1	90780-
17		421-93-42230	Plate, Stripe	2	90780-
18		09690-P0900	Plate, Komatsu Logo	2	90780-
19		09806-C0883	Plate, Danger, Keep Away from Machine .	2	90780-
20		09807-C0883	Plate, Danger, Keep Out under Work Equipment	2	90780-
21		09960-01601	Mark, Lift Point and Tie Down Point Marks	4	90780-
22		09669-0000E	Plate, Symbol, Fuel Filler	1	90780-
23		09659-A057B	Plate, Warning, Explosion Hazard, PPC Accumulator	1	90780-
24		09659-A057B	Plate, Warning, Explosion Hazard, Brake Accumulator	2	90780-
25		09659-A057B	Plate, Warning, Explosion Hazard, ECSS Accumulator	1	90780-
26	C2	09602-00003	Plate, Name (Limited Supply)	1	90780-
27		04418-13060	Screw	4	90780-
28		09667-A0481	Plate, Caution, Rotating Object	1	90780-
29		09696-40107	Plate, Noise Level, for EU	1	90780-
30		09696-50072	Plate, Noise Level, for EU	1	90780-
31		09664-62A11	Plate, Danger, Battery	2	90780-

FIG. U0100-031001 Marks and Plates (Turkish-English) (Exterior)

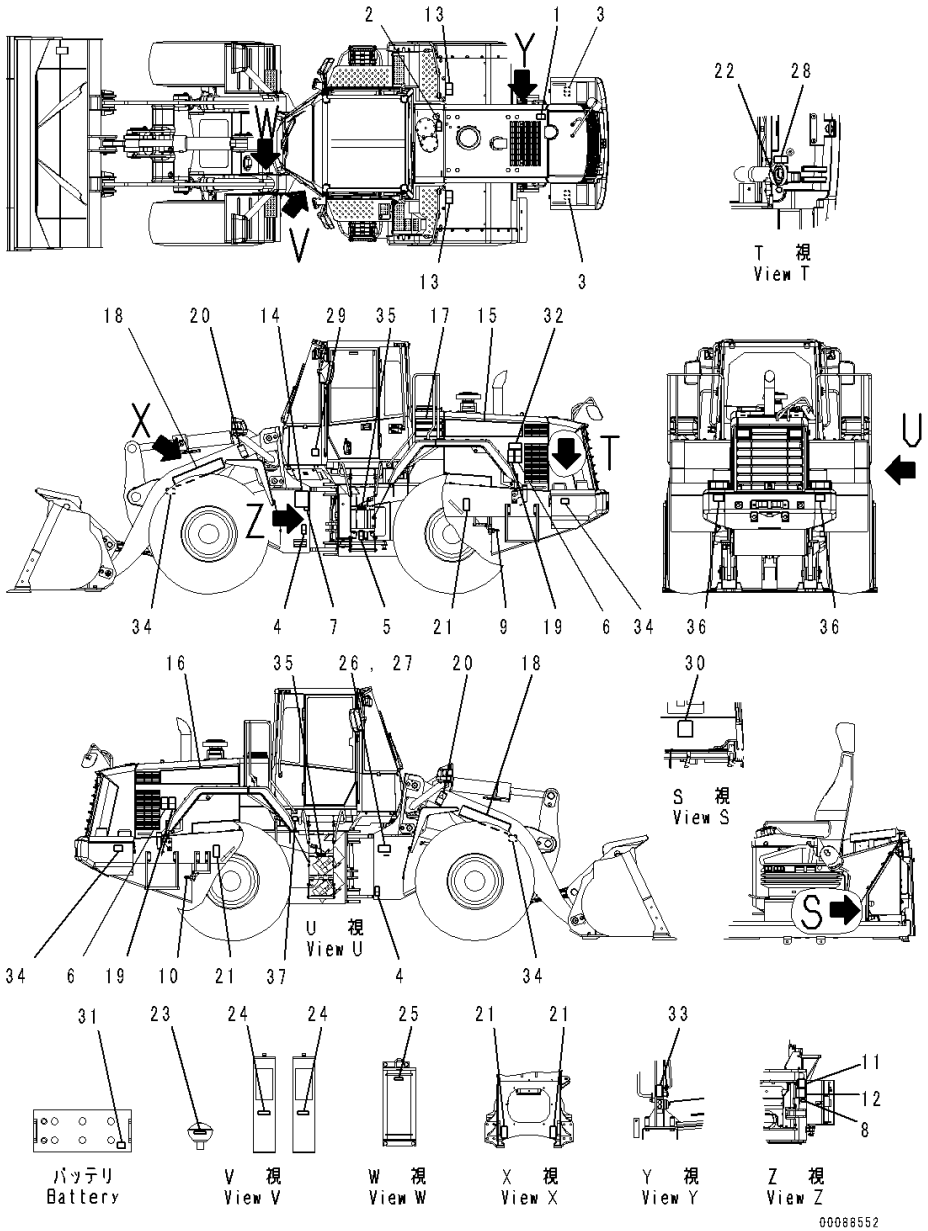

Index	Code	Part Number	Description	Qty	Serial Number
32		20Y-00-41530	Plate, Symbol, Ecot3	1	90780-
33		20Y-00-41640	Plate	1	90780-
34		423-93-41410	Plate, Side Reflector	4	90780-
35		423-93-41420	Plate, Step Side Reflector	2	90780-
36		14X-98-35181	Plate, Reflector	2	90780-
37		09642-A0480	Plate, Service Instruction	1	90780-

FIG. U0100-031002 Marks and Plates (Interior)

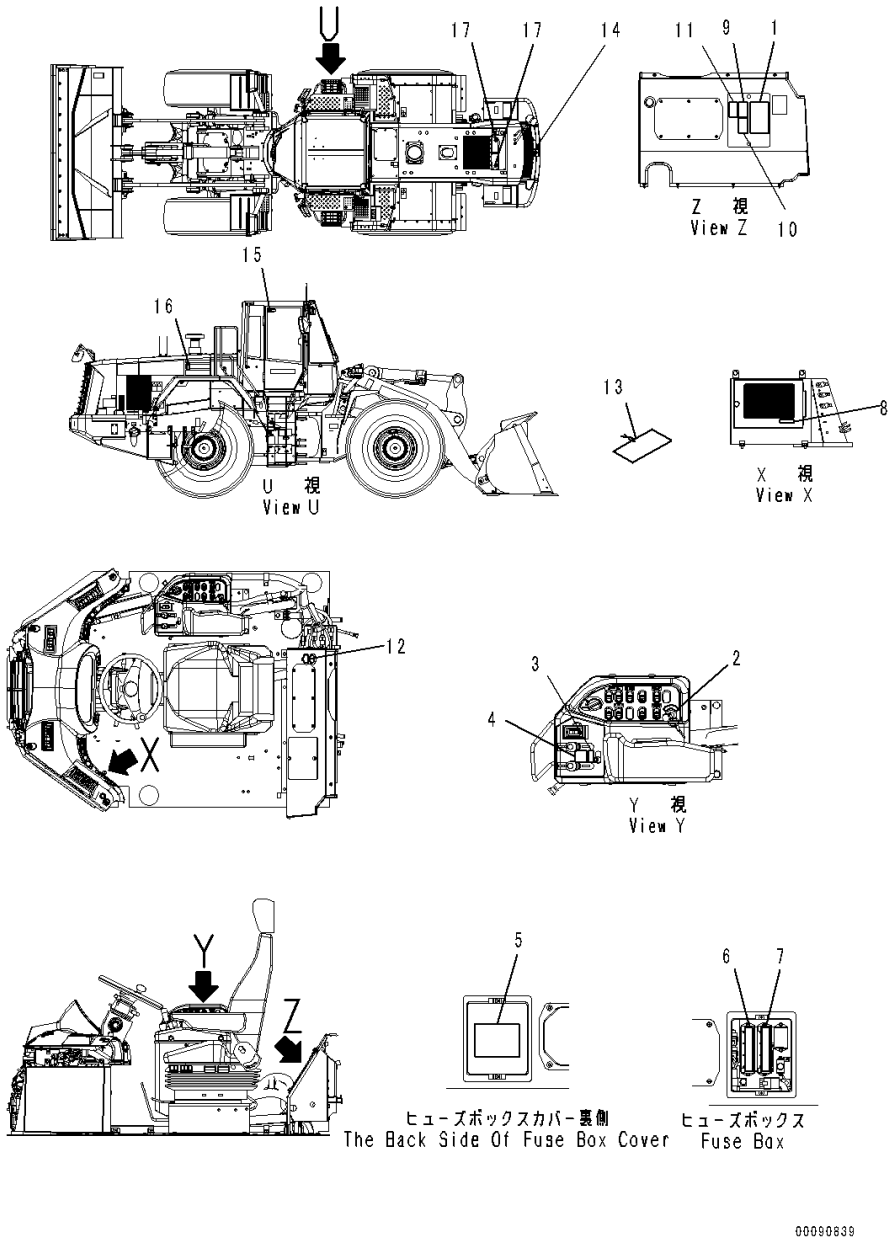

Index	Code	Part Number	Description	Qty	Serial Number
		Note: This list covers following specifications.			
		Turkish-English			
		Turkish-English, With Large Capacity Battery			
		423-V08-4132	Plate Assembly	1	90780-
1	C1		• Plate, Caution, Starting	1	90780-
2	C1		• Plate, Main Switch	1	90780-
3	C1		• Plate, Work Equipment Control Lever Lock	1	90780-
4	C1		• Plate, Work Equipment Control Lever Pattern	1	90780-
5	C1		• Plate, Relay	1	90780-
6	C1		• Plate, Fuse 1	1	90780-
7	C1		• Plate, Fuse 2	1	90780-
8	C1		• Plate, Air Conditioner Filter	1	90780-
9		09651-A0481	• Plate, Warning, Read Manual Before Operating	1	90780-
10		09654-C0481	• Plate, Warning, Before Leaving Seat	1	90780-
11		09801-C0481	• Plate, Danger, High Voltage Hazard	1	90780-
12		22U-00-21511	Plate, 12volt Socket	1	90780-
13		09963-A1640	Tag, Danger, Do Not Operate	1	90780-
14		421-93-41390	Plate, Tow Hook	1	90780-
15		09659-A0641	Plate, Warning, Explosion Hazard, Gas Spring	1	90780-
16		09659-A0641	Plate, Warning, Explosion Hazard, Gas Spring	4	90780-
17		23B-53-71190	Plate, Caution, Radiator Cap, Radiator Cap	2	90780-

FIG. U0100-035001 Marks and Plates (Turkish-English, With Large Capacity Battery) (Exterior)

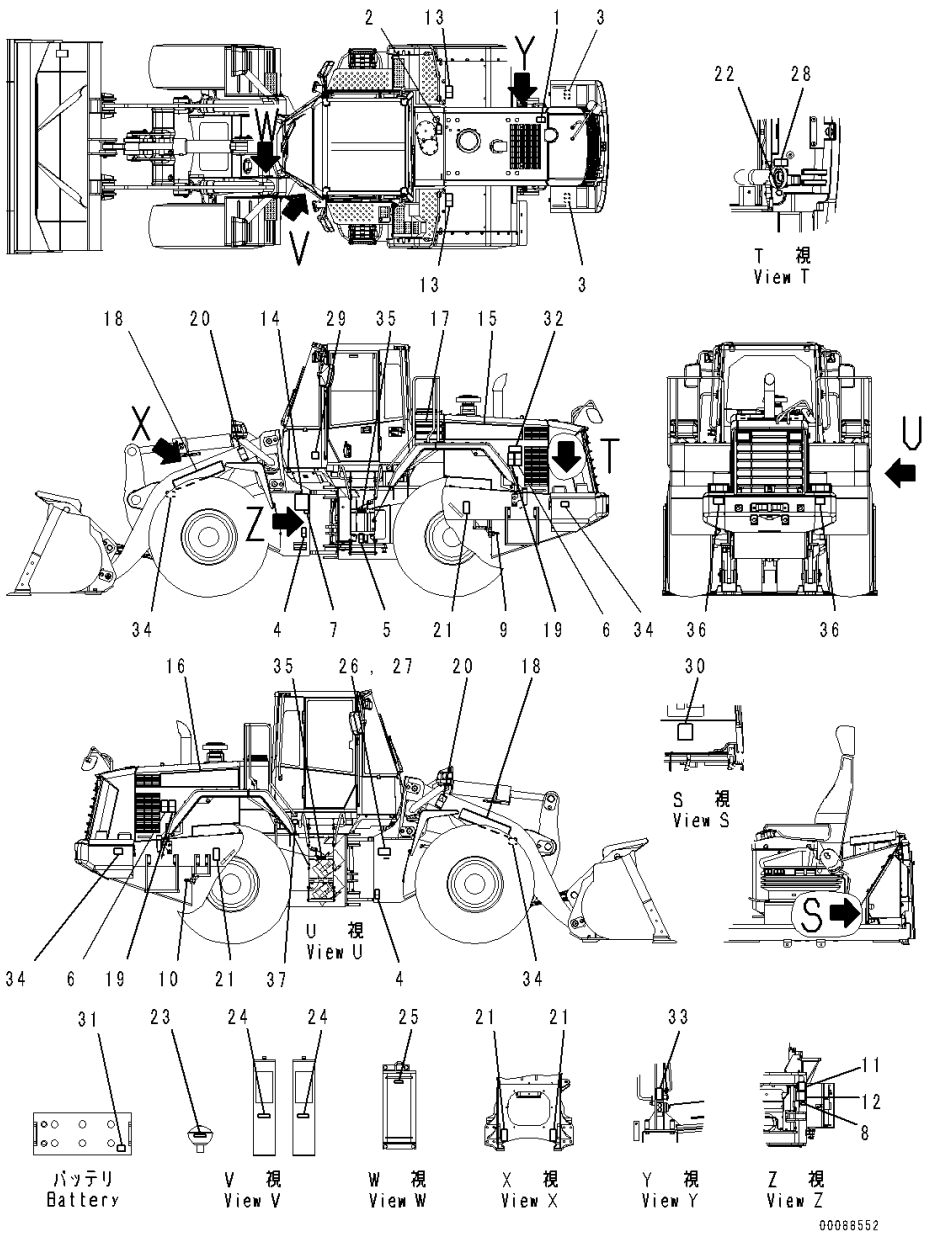

Index	Code	Part Number	Description	Qty	Serial Number
		426-93-21570	Plate Assembly	1	90780-
1	C1		• Plate, Warning, High Temperature	1	90780-
2	C1		• Plate, Warning, High Temperature	1	90780-
3	C1		• Plate, Warning, Battery Cables	2	90780-
4	C1		• Plate, Danger, Keep Off	2	90780-
5	C1		• Plate, Warning, Articulation Lock	1	90780-
6	C1		• Plate, Caution, Rotating Object	2	90780-
		423-V08-4111	Plate Assembly	1	90780-
7	C1		• Plate, Remote Grease, Cylinder	1	90780-
8	C1		• Plate, Remote Grease, Rear Axle	1	90780-
9	C1		• Plate, Radiator Drain	1	90780-
10	C1		• Plate, Engine Oil Drain	1	90780-
11	C1		• Plate, Parking Brake Emergency Release Switch	1	90780-
12	C1		• Plate, Parking Brake Emergency Release Switch	1	90780-
13		09805-C0881	• Plate, Caution, Do not Get On	2	90780-
14		421-93-41310	Oil Chart	1	90780-
15		421-93-42240	Plate, Machine Model, WA470	1	90780-
16		421-93-42250	Plate, Machine Model, WA470	1	90780-
17		421-93-42230	Plate, Stripe	2	90780-
18		09690-P0900	Plate, Komatsu Logo	2	90780-
19		09806-C0883	Plate, Danger, Keep Away from Machine .	2	90780-
20		09807-C0883	Plate, Danger, Keep Out under Work Equipment	2	90780-
21		09960-01601	Mark, Lift Point and Tie Down Point Marks	4	90780-
22		09669-0000E	Plate, Symbol, Fuel Filler	1	90780-
23		09659-A057B	Plate, Warning, Explosion Hazard, PPC Accumulator	1	90780-
24		09659-A057B	Plate, Warning, Explosion Hazard, Brake Accumulator	2	90780-
25		09659-A057B	Plate, Warning, Explosion Hazard, ECSS Accumulator	1	90780-
26	C2	09602-00003	Plate, Name (Limited Supply)	1	90780-
27		04418-13060	Screw	4	90780-
28		09667-A0481	Plate, Caution, Rotating Object	1	90780-
29		09696-40107	Plate, Noise Level, for EU	1	90780-
30		09696-50072	Plate, Noise Level, for EU	1	90780-
31		09664-62D11	Plate, Danger, Battery	2	90780-

FIG. U0100-035001 Marks and Plates (Turkish-English, With Large Capacity Battery) (Exterior)

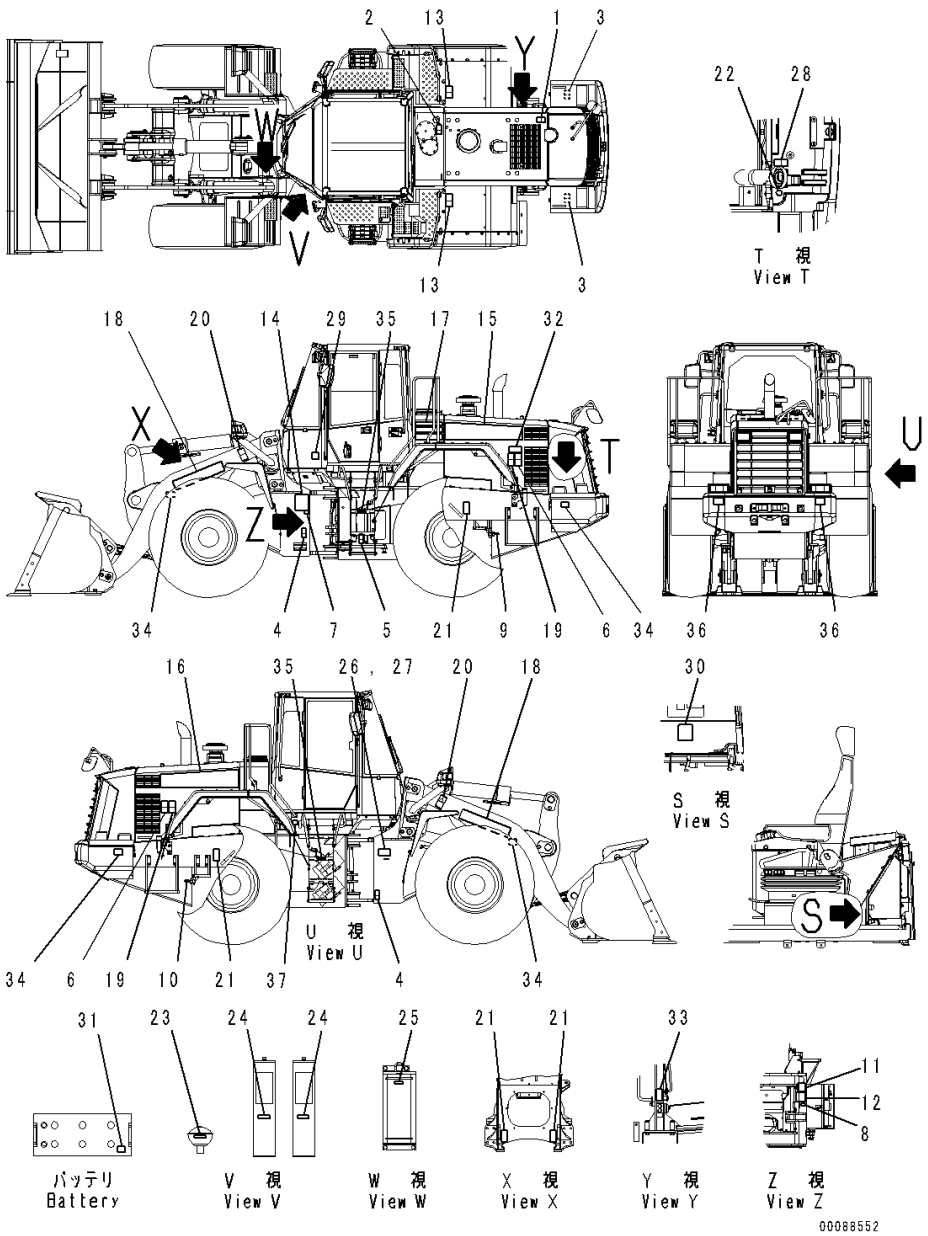

Index	Code	Part Number	Description	Qty	Serial Number
32		20Y-00-41530	Plate, Symbol, Ecot3	1	90780-
33		20Y-00-41640	Plate	1	90780-
34		423-93-41410	Plate, Side Reflector	4	90780-
35		423-93-41420	Plate, Step Side Reflector	2	90780-
36		14X-98-35181	Plate, Reflector	2	90780-
37		09642-A0480	Plate, Service Instruction	1	90780-

FIG. U0100-020001 Marks and Plates (Spanish, Text Type) (Exterior)

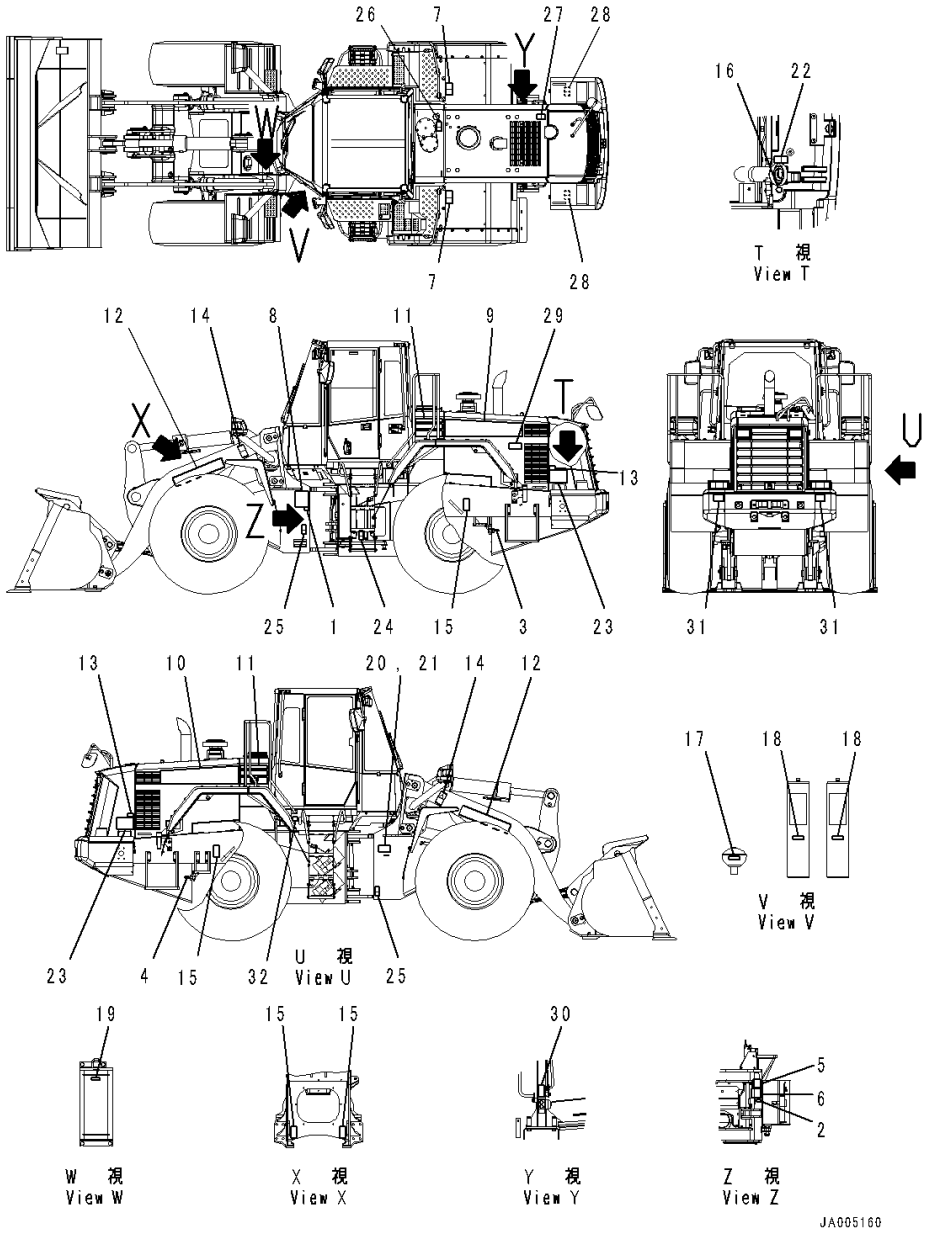

Index	Code	Part Number	Description	Qty	Serial Number
		423-V00-4110	Plate Assembly	1	90216-
1	C1		• Plate, Remote Grease, Cylinder	1	90216-
2	C1		• Plate, Remote Grease, Rear Axle	1	90216-
3	C1		• Plate, Radiator Drain	1	90216-
4	C1		• Plate, Engine Oil Drain	1	90216-
5	C1		• Plate, Parking Brake Emergency Release Method	1	90216-
6	C1		• Plate, Warning, Parking Brake Emergency Release	1	90216-
7		09805-01000	• Plate, Caution, Fender	2	90216-
8		421-93-41310	Oil Chart	1	90216-
9		421-93-42240	Plate, Machine Model, WA470	1	90216-
10		421-93-42250	Plate, Machine Model, WA470	1	90216-
11		421-93-42230	Plate, Stripe	2	90216-
12		09690-P0900	Plate, Komatsu Logo	2	90216-
13		09812-11000	Plate, Danger, Keep a Safe Distance	2	90216-
14		09807-C0883	Plate, Danger, Keep Out under Work Equipment	2	90216-
15		09960-01601	Mark, Lift Point and Tie Down Point Marks	4	90216-
16		09669-0000E	Plate, Symbol, Fuel Filler	1	90216-
17		09659-51000	Plate, Warning, Explosion Hazard	1	90216-
18		09659-51000	Plate, Warning, Explosion Hazard	2	90216-
19		09659-51000	Plate, Warning, Explosion Hazard	1	90216-
20	C2	09602-10001	Plate, Name (Limited Supply)	1	90216-
21		04418-13060	Screw	4	90216-
22		09667-01001	Plate, Caution, Rotating Object	1	90216-
23		09667-01001	Plate, Caution, Rotating Object	2	90216-
24		09161-21000	Plate, Warning, Articulation Lock	1	90216-
25		09162-21000	Plate, Danger, Keep Off	2	90216-
26		09653-01001	Plate, Warning, High Temperature	1	90216-
27		09668-01001	Plate, Warning, Hot Water	1	90216-
28		09808-01000	Plate, Warning, Battery Cables	2	90216-
29		20Y-00-41530	Plate, Symbol, Ecot3	1	90216-
30		20Y-00-41710	Plate, Pre Filter Caution	1	90216-
31		14X-98-35181	Plate, Reflector	2	90216-
32		09642-11000	Plate, Service Instruction, Engine Coolant AF-NAC	1	90216-

FIG. U0100-020002 Marks and Plates (Spanish, Text Type) (Interior)

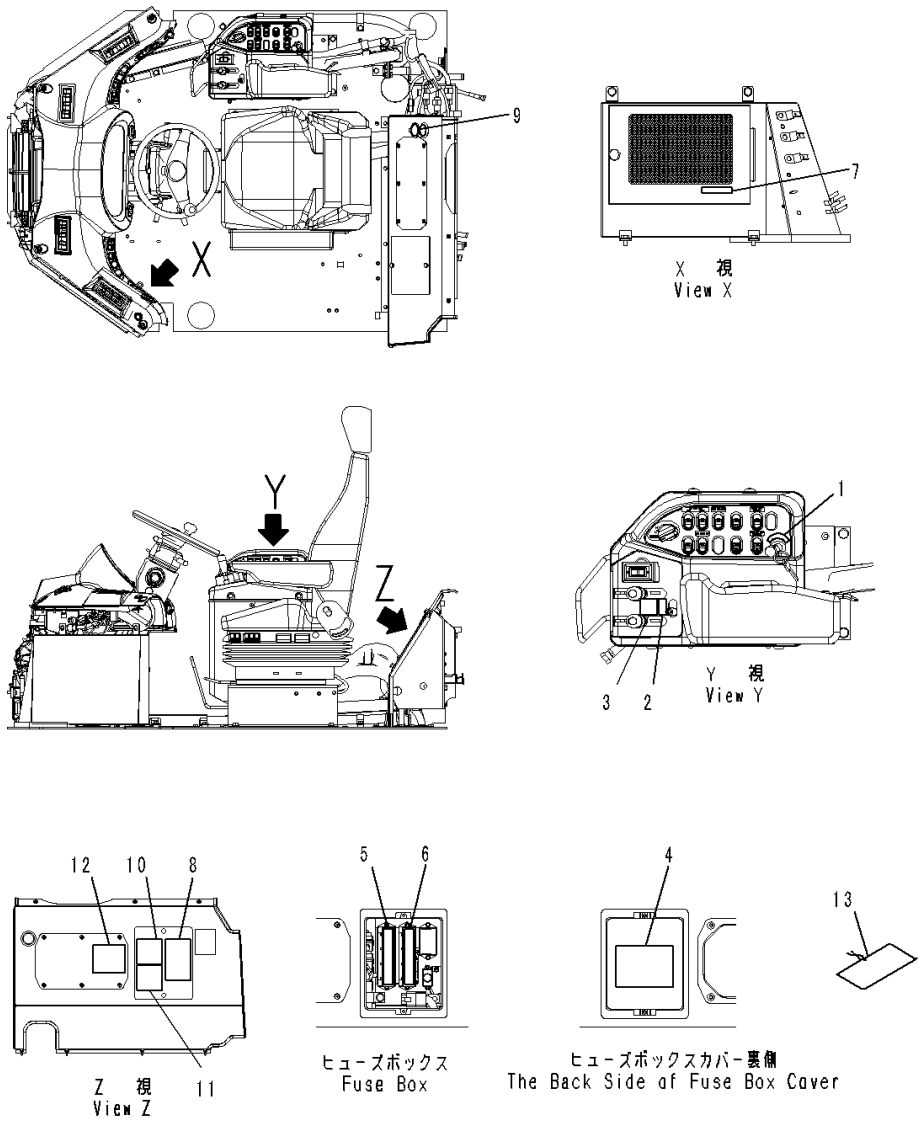

Index	Code	Part Number	Description	Qty	Serial Number
		423-V00-4131	Plate Assembly	1	90216-
1	C1		• Plate, Main Switch	1	90216-
2	C1		• Plate, Work Equipment Lever Lock	1	90216-
3	C1		• Plate, Work Equipment Pattern	1	90216-
4	C1		• Plate, Relay	1	90216-
5	C1		• Plate, Fuse (2)	1	90216-
6	C1		• Plate, Fuse (1)	1	90216-
7	C1		• Plate, Air Conditioner Filter	1	90216-
8		09802-31000	• Plate, Warning, Before Operating and Traveling	1	90216-
9		22U-00-21510	Plate, 12volt Socket	1	90216-
10		09651-01001	Plate, Warning, Read Manual Before Operating	1	90216-
11		09654-01001	Plate, Warning, Before Leaving Seat	1	90216-
12		09801-11001	Plate, Danger, High Voltage Hazard	1	90216-
13		09963-01001	Tag, Danger, Do Not Operate	1	90216-

FIG. U0205-001001 KOMTRAX Plate

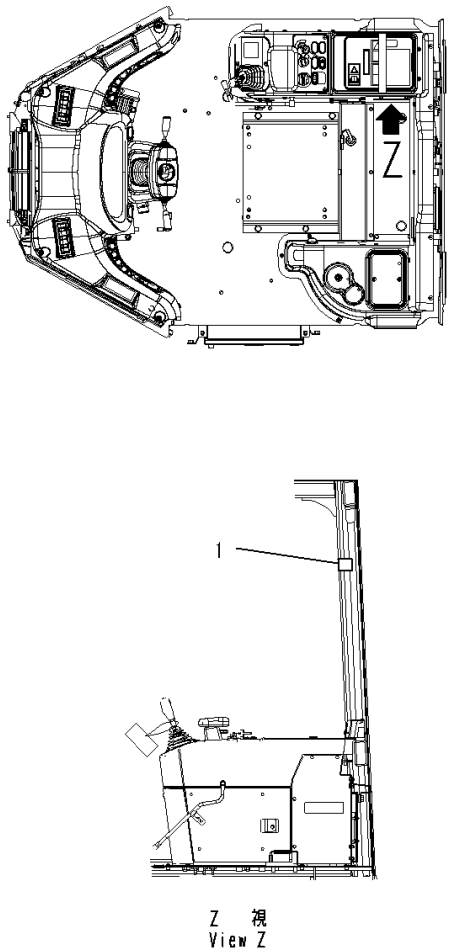

Index	Code	Part Number	Description	Qty	Serial Number
1		09845-00480	Plate, Caution, Blast Site	1	90216-

FIG. U0208-002001 Hazard Level Plates (Australia Regulation)

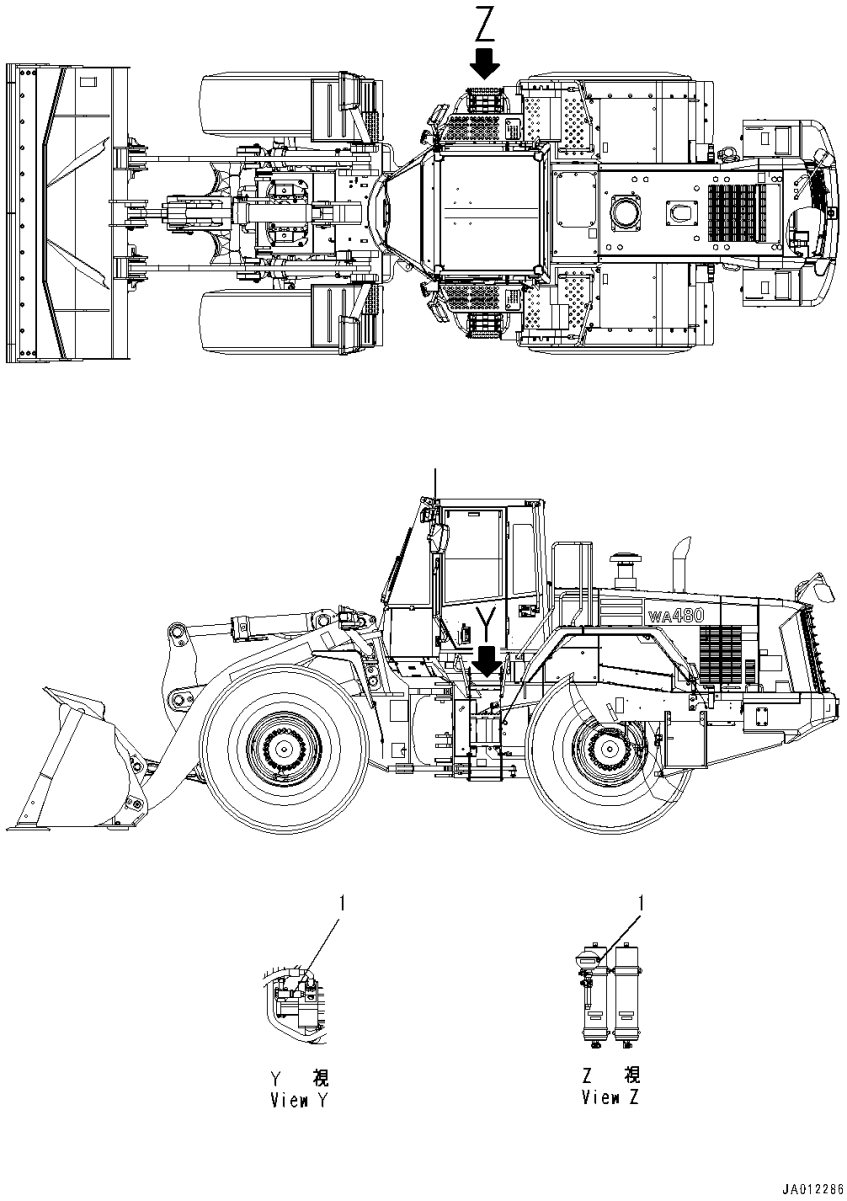

Index	Code	Part Number	Description	Qty	Serial Number
1		09698-00001	Plate, Hazard Level	2	90943-

FIG. U0605-001001 ROPS Plate (English)

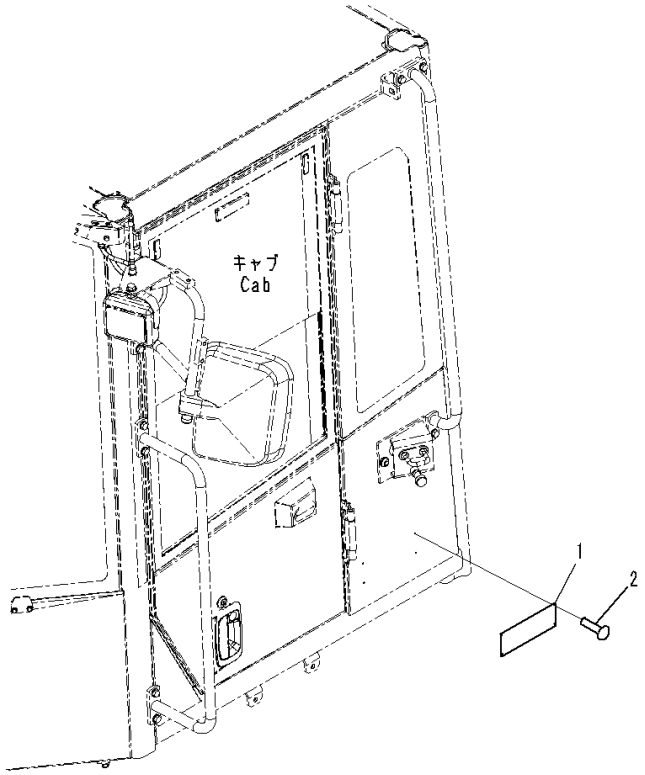

Index	Code	Part Number	Description	Qty	Serial Number
1	C2	09620-A2000	Plate, Name, ROPS/FOPS (Limited Supply)	1	90216-
2		205-00-72430	Rivet	4	90216-

FIG. U0605-003001 ROPS Plate (Spanish, Text Type)

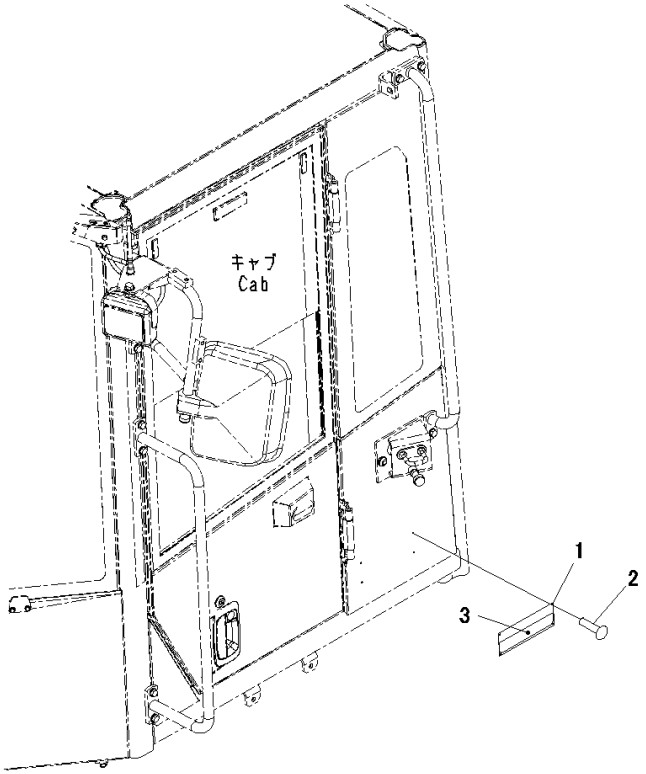

00053373

Index	Code	Part Number	Description	Qty	Serial Number
1	C2	09620-A2000	Plate, Name, ROPS/FOPS (Limited Supply)	1	90216-
2		205-00-72430	Rivet	4	90216-
3	C2	09620-A2070	Plate, Warning, ROPS/FOPS	1	90216-

FIG. U0605-004001 ROPS Plate (For EU Safety Regulation)

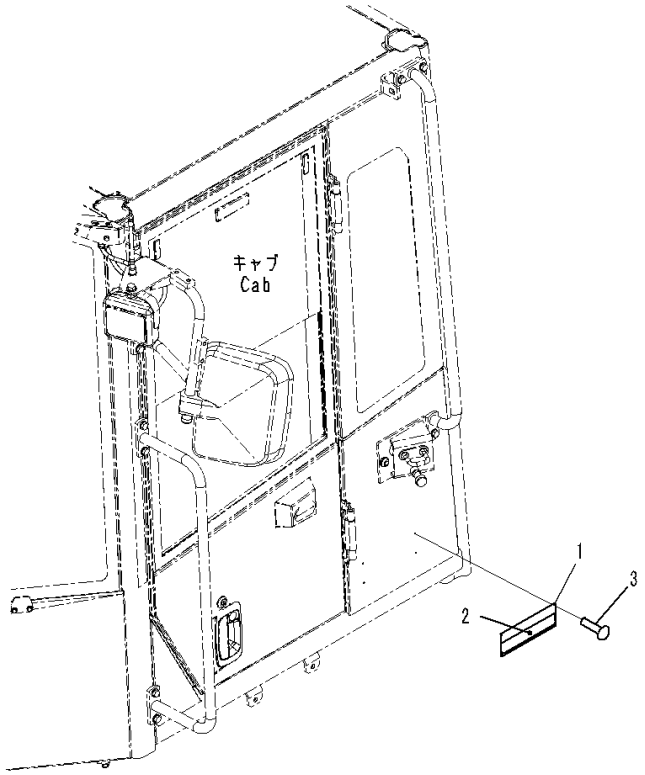

Index	Code	Part Number	Description	Qty	Serial Number
1	C2	09620-A2000	Plate, Name, ROPS/FOPS (Limited Supply)	1	90216-
2	C2	09620-A3000	Plate, Warning, ROPS/FOPS	1	90216-
3		205-00-72430	Rivet	4	90216-

AUXILIARY PARTS AND TOOL

FIG. V0100-001001 Spare Parts

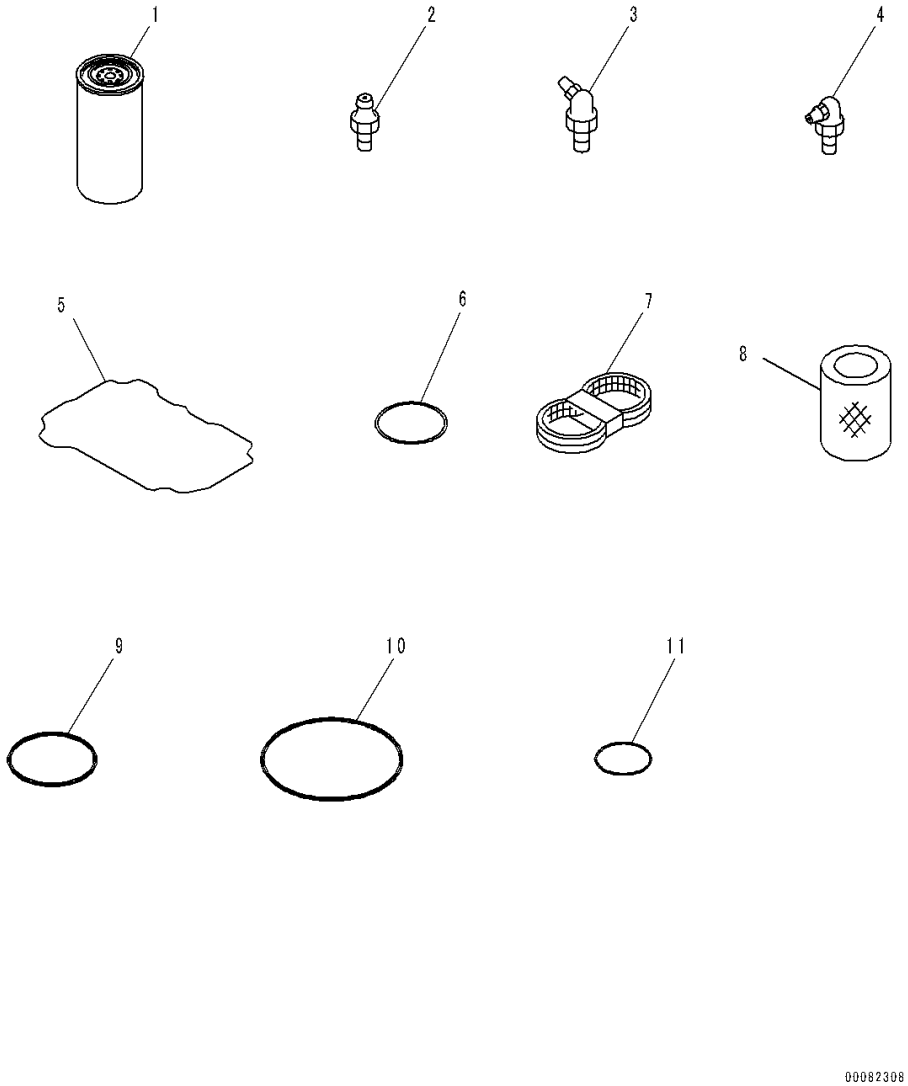

Index	Code	Part Number	Description	Qty	Serial Number
1		714-07-28713	Cartridge	1	90216-
2		07020-00000	Fitting, Grease	4	90216-
3		07020-00675	Fitting, Grease	4	90216-
4		07020-00900	Fitting, Grease	4	90216-
5		6251-11-8810	Gasket	6	90216-
6		6219-71-1160	O-ring	6	90216-
7		04120-21754	V-belt	1	90216-
8		207-60-71182	Element, Hydraulic Oil Filter	1	90216-
9		07000-15160	O-ring	1	90216-
10		07000-15195	O-ring	1	90216-
11		07000-75085	O-ring	1	90216-

FIG. V0300-002001 General Tool Set

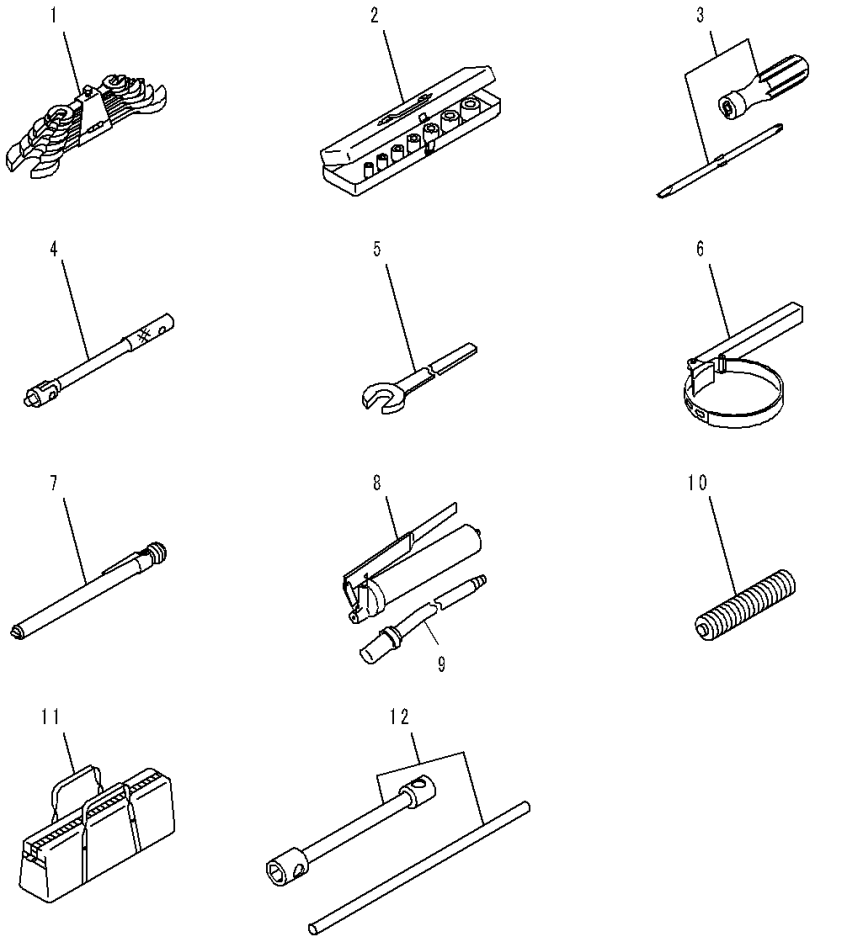

Index	Code	Part Number	Description	Qty	Serial Number
1		09000-30006	Wrench Set	1	90216-
2		09021-01928	Socket, W=19mm	1	90216-
3		09033-00190	Driver	1	90216-
4		09023-00300	Handle	1	90216-
5		09001-03600	Wrench	1	90216-
6		09019-28035	Wrench	1	90216-
7		09289-00000	Gauge, Tire Inflation Pressure	1	90216-
		07952-70004	Pump Assembly	1	90216-
8		07950-10450	• Pump	1	90216-
9		07951-41017	• Nozzle	1	90216-
10		07950-90403	Cartridge, Grease	1	90216-
11		09056-05620	Bag	1	90216-
12		417-98-11121	Wrench	1	90216-

FIG. V0300-004001 General Tool Set (With Hammer)

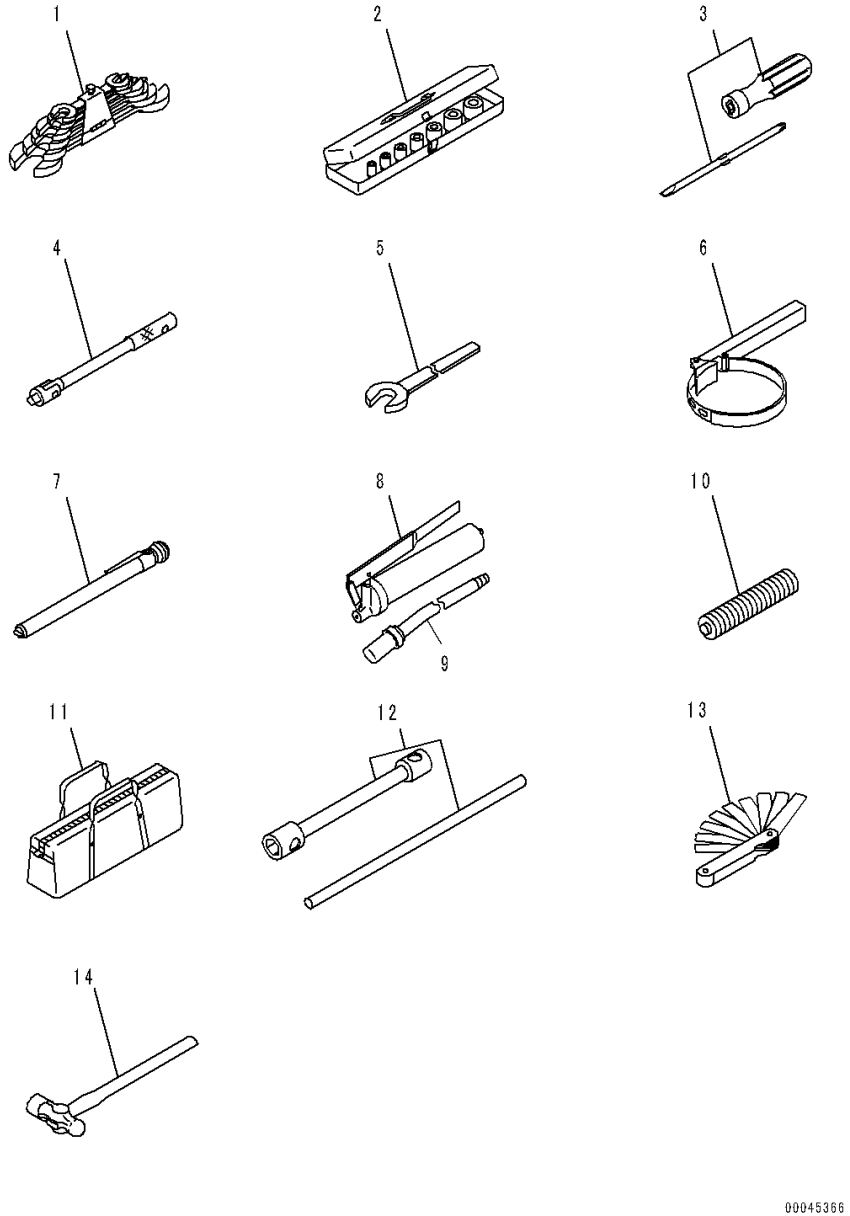

Index	Code	Part Number	Description	Qty	Serial Number
1		09000-30006	Wrench Set	1	90216-
2		09021-01928	Socket, W=19mm	1	90216-
3		09033-00190	Driver	1	90216-
4		09023-00300	Handle	1	90216-
5		09001-03600	Wrench	1	90216-
6		09019-28035	Wrench	1	90216-
7		09289-00000	Gauge, Tire Inflation Pressure	1	90216-
		07952-70004	Pump Assembly	1	90216-
8		07950-10450	• Pump	1	90216-
9		07951-41017	• Nozzle	1	90216-
10		07950-90403	Cartridge, Grease	1	90216-
11		09056-05620	Bag	1	90216-
12		417-98-11121	Wrench	1	90216-
13		09054-00009	Gauge, Filler	1	90216-
14		09039-00150	Hammer	1	90216-

FIG. V0300-011001 General Tool Set (With Tire Stopper)

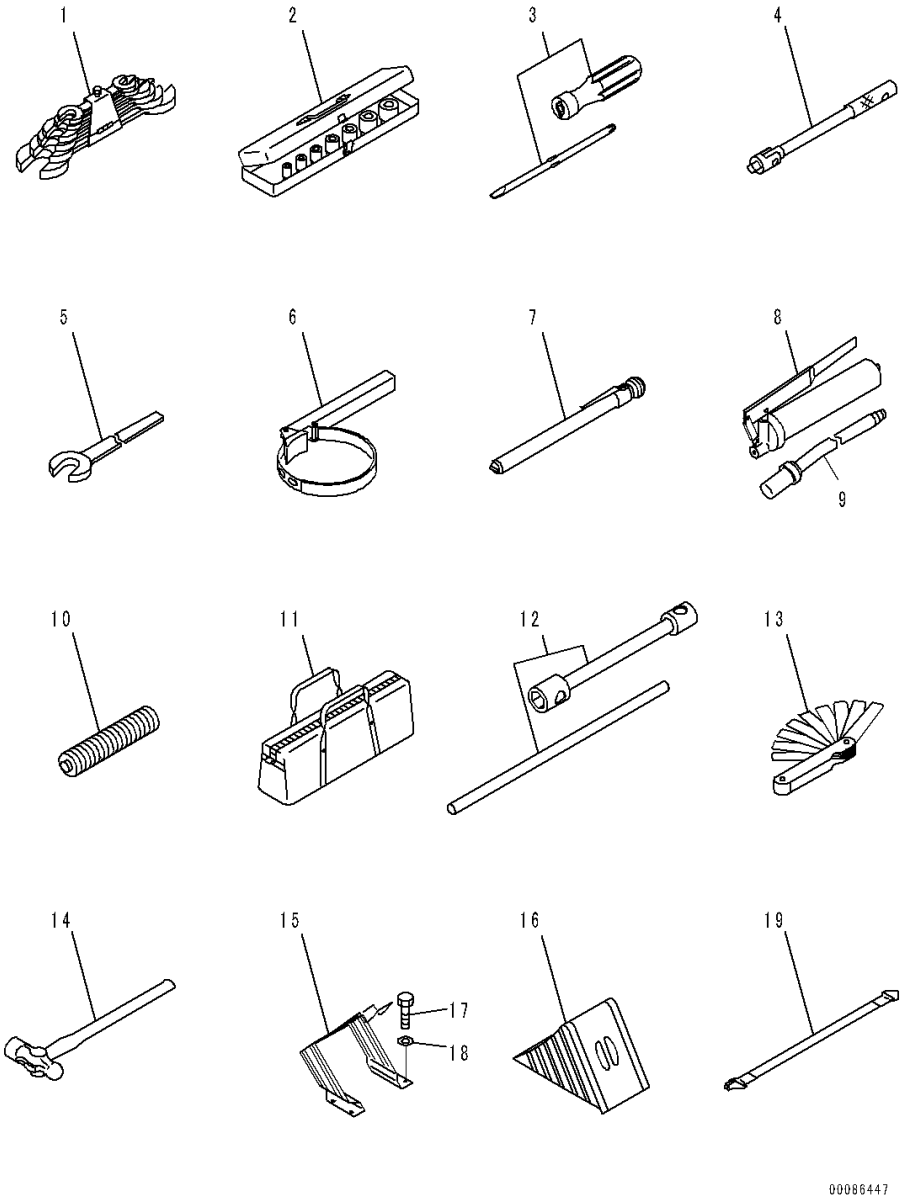

Index	Code	Part Number	Description	Qty	Serial Number
1		09000-30006	Wrench Set	1	90216-
2		09021-01928	Socket, W=19mm	1	90216-
3		09033-00190	Driver	1	90216-
4		09023-00300	Handle	1	90216-
5		09001-03600	Wrench	1	90216-
6		09019-28035	Wrench	1	90216-
7		09289-00000	Gauge, Tire Inflation Pressure	1	90216-
		07952-70004	Pump Assembly	1	90216-
8		07950-10450	• Pump	1	90216-
9		07951-41017	• Nozzle	1	90216-
10		07950-90403	Cartridge, Grease	1	90216-
11		09056-05620	Bag	1	90216-
12		417-98-11121	Wrench	1	90216-
13		09054-00009	Gauge, Filler	1	90216-
14		09039-00150	Hammer	1	90216-
15		421-Z65-H180	Bracket	2	90216-
16		421-Z65-H190	Stopper, Tire, Wheel	2	90216-
17		01010-80820	Bolt	8	90216-
18		01643-30823	Washer	8	90216-
19		421-Z65-H150	Band, Rubber	2	90216-

FIG. V0300-009001 General Tool Set (With Tire Stopper, Without Tool Kit)

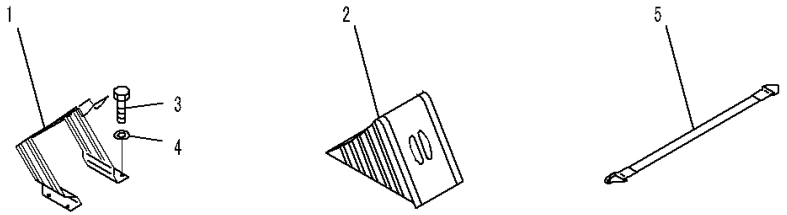

00086446

Index	Code	Part Number	Description	Qty	Serial Number
1		421-Z65-H180	Bracket	2	90216-
2		421-Z65-H190	Stopper, Tire, Wheel	2	90216-
3		01010-80820	Bolt	8	90216-
4		01643-30823	Washer	8	90216-
5		421-Z65-H150	Band, Rubber	2	90216-

FIG. V0300-010001 General Tool Set (With Tire Stopper, For Europe Specification)

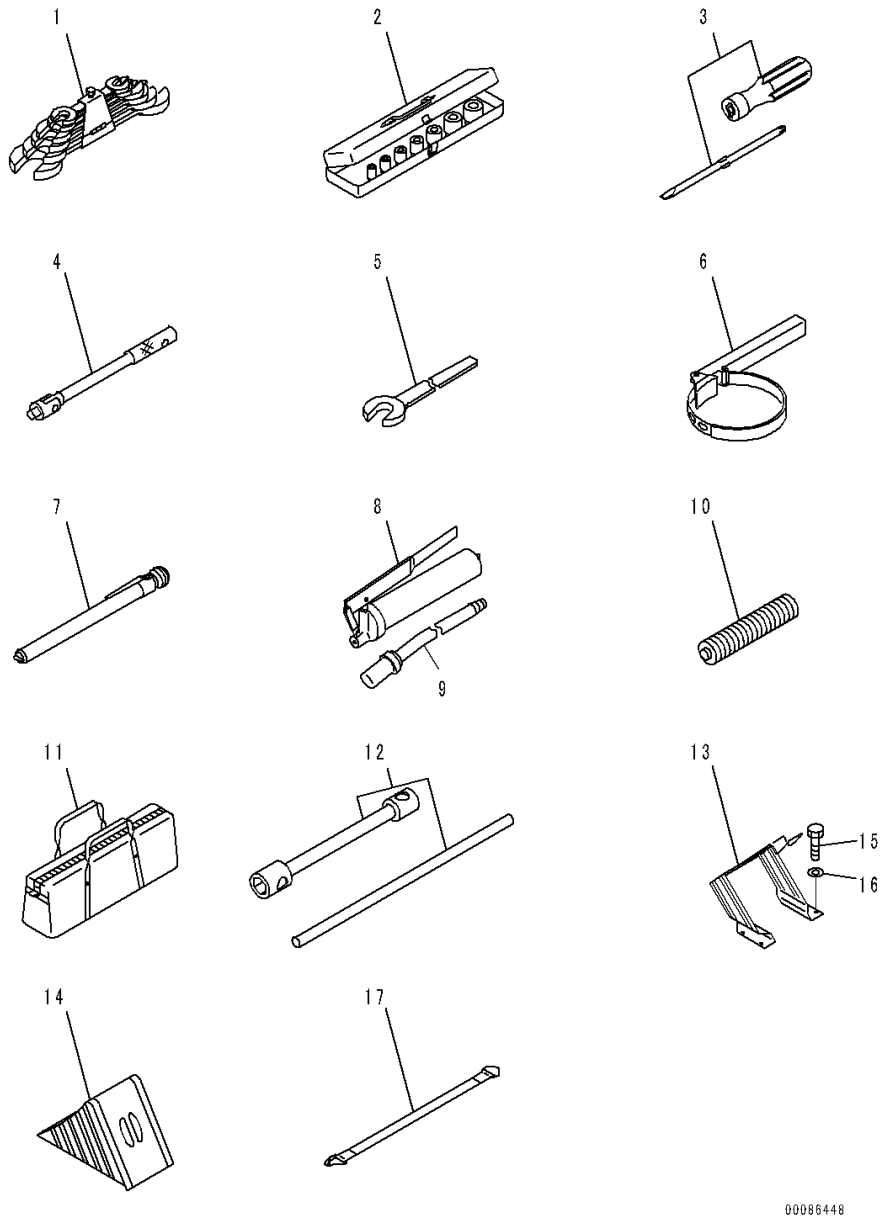

Index	Code	Part Number	Description	Qty	Serial Number
1		09000-30006	Wrench Set	1	90216-
2		09021-01928	Socket, W=19mm	1	90216-
3		09033-00190	Driver	1	90216-
4		09023-00300	Handle	1	90216-
5		09001-03600	Wrench	1	90216-
6		09019-28035	Wrench	1	90216-
7		09289-00000	Gauge, Tire Inflation Pressure	1	90216-
		07952-70004	Pump Assembly	1	90216-
8		07950-10450	• Pump	1	90216-
9		07951-41017	• Nozzle	1	90216-
10		07950-90403	Cartridge, Grease	1	90216-
11		09056-05620	Bag	1	90216-
12		417-98-11121	Wrench	1	90216-
13		421-Z65-H180	Bracket	2	90216-
14		421-Z65-H190	Stopper, Tire, Wheel	2	90216-
15		01010-80820	Bolt	8	90216-
16		01643-30823	Washer	8	90216-
17		421-Z65-H150	Band, Rubber	2	90216-

FIG. V0300-013001 General Tool Set (With Tire Stopper, Large Sized Cap and Overall)

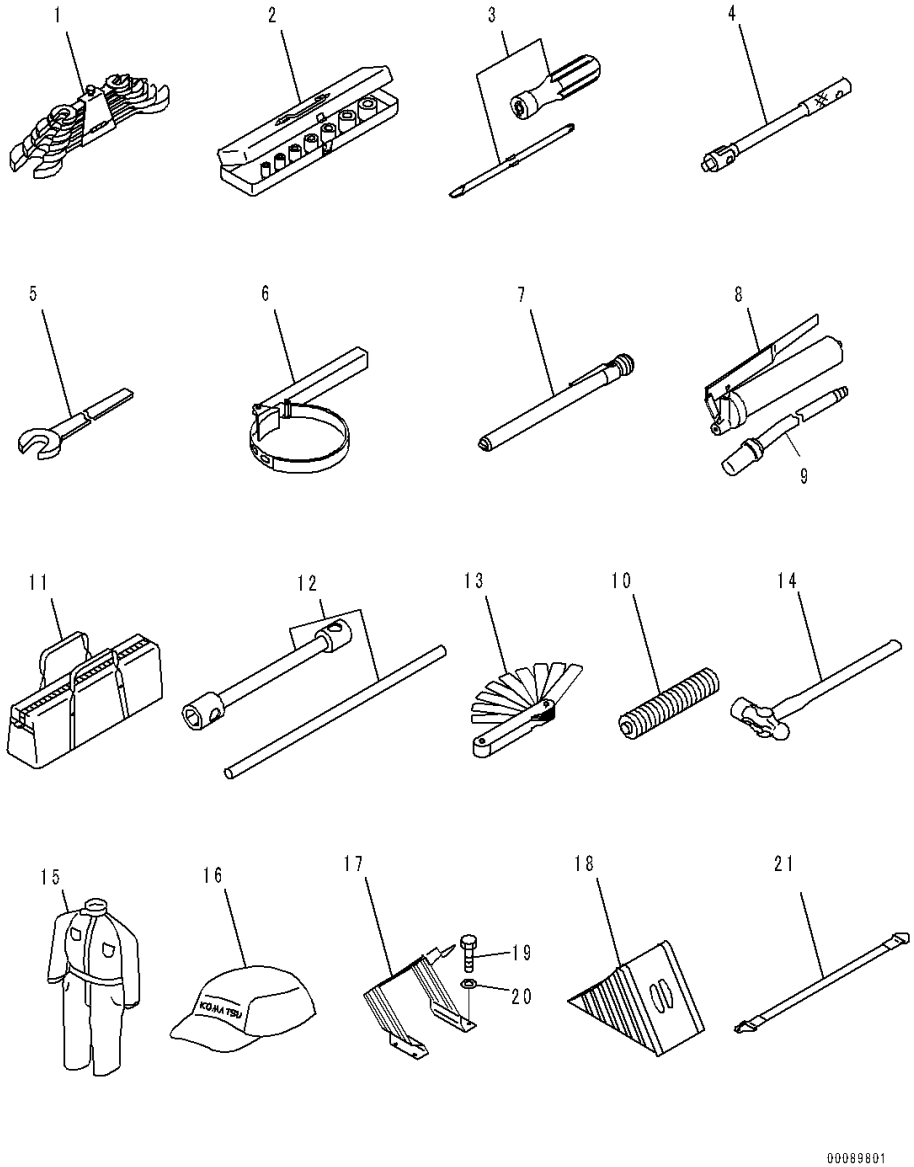

Index	Code	Part Number	Description	Qty	Serial Number
1		09000-30006	Wrench Set	1	90216-
2		09021-01928	Socket, W=19mm	1	90216-
3		09033-00190	Driver	1	90216-
4		09023-00300	Handle	1	90216-
5		09001-03600	Wrench	1	90216-
6		09019-28035	Wrench	1	90216-
7		09289-00000	Gauge, Tire Inflation Pressure	1	90216-
		07952-70004	Pump Assembly	1	90216-
8		07950-10450	• Pump	1	90216-
9		07951-41017	• Nozzle	1	90216-
10		07950-90403	Cartridge, Grease	1	90216-
11		09056-05620	Bag	1	90216-
12		417-98-11121	Wrench	1	90216-
13		09054-00009	Gauge, Filler	1	90216-
14		09039-00150	Hammer	1	90216-
15		09980-10550	Overall	1	90216-
16		09982-10057	Cap	1	90216-
17		421-Z65-H180	Bracket	2	90216-
18		421-Z65-H190	Stopper, Tire, Wheel	2	90216-
19		01010-80820	Bolt	8	90216-
20		01643-30823	Washer	8	90216-
21		421-Z65-H150	Band	2	90216-

FIG. V0300-012001 General Tool Set (With Tire Stopper, Large Sized Cap and Overall, Without Tool Kit)

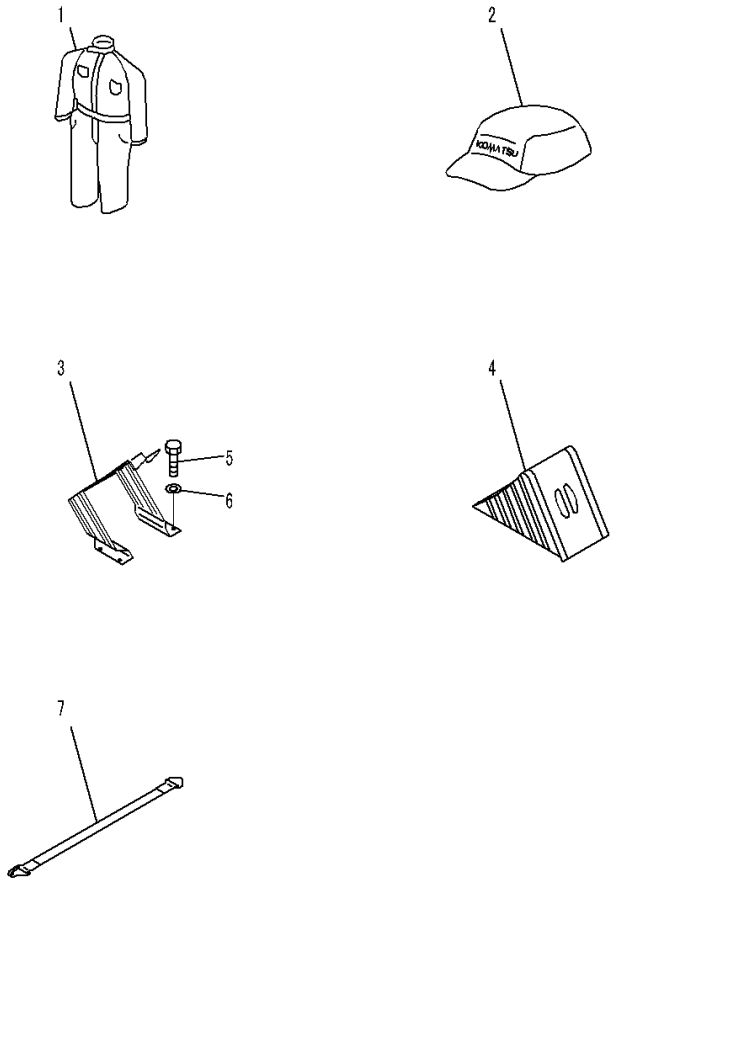

Index	Code	Part Number	Description	Qty	Serial Number
1		09980-10550	Overall	1	90216-
2		09982-10057	Cap	1	90216-
3		421-Z65-H180	Bracket	2	90216-
4		421-Z65-H190	Stopper, Tire, Wheel	2	90216-
5		01010-80820	Bolt	8	90216-
6		01643-30823	Washer	8	90216-
7		421-Z65-H150	Band	2	90216-

FIG. V0300-003001 General Tool Set, Cap and Overall

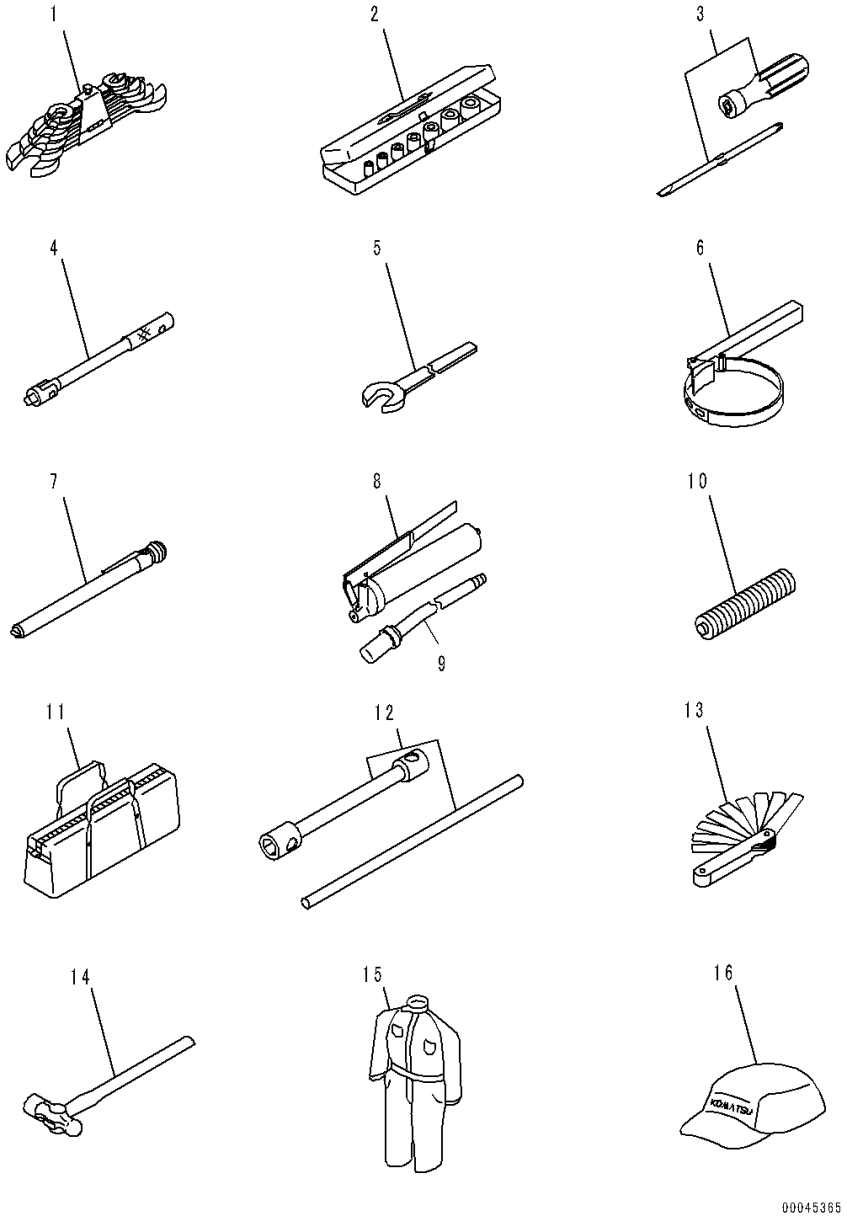

Index	Code	Part Number	Description	Qty	Serial Number
1		09000-30006	Wrench Set	1	90216-
2		09021-01928	Socket, W=19mm	1	90216-
3		09033-00190	Driver	1	90216-
4		09023-00300	Handle	1	90216-
5		09001-03600	Wrench	1	90216-
6		09019-28035	Wrench	1	90216-
7		09289-00000	Gauge, Tire Inflation Pressure	1	90216-
		07952-70004	Pump Assembly	1	90216-
8		07950-10450	• Pump	1	90216-
9		07951-41017	• Nozzle	1	90216-
10		07950-90403	Cartridge, Grease	1	90216-
11		09056-05620	Bag	1	90216-
12		417-98-11121	Wrench	1	90216-
13		09054-00009	Gauge, Filler	1	90216-
14		09039-00150	Hammer	1	90216-
15		09980-10550	Overall	1	90216-
16		09982-10057	Cap	1	90216-

FIELD REPAIR SERVICE PARTS

FIG. KIT Service Kit Parts (1/4)

Index	Code	Part Number	Description	Qty	Serial Number
K01		714-07-05150	Service Kit, Transmission		90216-
			With Lockup Type		
		02896-61008	• O-ring	1	-
		02896-61009	• O-ring	2	-
		07000-72012	• O-ring	1	-
		07000-72015	• O-ring	2	-
		07000-72065	• O-ring	1	-
		07000-73022	• O-ring	1	-
		07000-73025	• O-ring	1	-
		07000-73028	• O-ring	4	-
		07000-73030	• O-ring	1	-
		07000-73035	• O-ring	3	-
		07000-73048	• O-ring	2	-
		07000-75065	• O-ring	1	-
		07000-75085	• O-ring	1	-
		07000-75130	• O-ring	2	-
		07000-75150	• O-ring	3	-
		07000-75270	• O-ring	2	-
		07000-75295	• O-ring	1	-
		07000-75305	• O-ring	1	-
		07000-75475	• O-ring	1	-
		07000-A5270	• O-ring	1	-
		07000-A6220	• O-ring	1	-
		07000-A6275	• O-ring	1	-
		07001-06225	• Ring, Back-up	1	-
		07001-06280	• Ring, Back-up	1	-
		07002-61023	• O-ring	12	-
		07002-61223	• O-ring	1	-
		07002-61423	• O-ring	7	-
		07002-61623	• O-ring	4	-
		07002-62034	• O-ring	3	-
		07002-62434	• O-ring	2	-
		07005-01012	• Seal, Washer	6	-
		07005-01212	• Seal, Washer	2	-
		07005-01612	• Seal, Washer	4	-
		07012-50105	• Seal, Oil	1	-
		113-15-12840	• Seal Ring	2	-
		144-15-22881	• Seal Ring	2	-
		195-13-12711	• Seal Ring	1	-
		419-15-12122	• Ring	3	-
		425-15-28710	• Seal, Dust	1	-
		714-07-00310	• Shim Assembly	1	-
		714-07-00320	• Shim Assembly	1	-
		714-07-00330	• Shim Assembly	1	-
		714-07-18541	• Seal, Dust	1	-
		714-07-19320	• Seal Ring	2	-
		714-07-39120	• Seal, Oil	1	-
		714-07-49210	• Seal Ring	2	-
		714-07-49220	• Seal Ring	2	-
		714-08-19210	• Seal Ring	1	-
		714-08-19230	• Seal Ring	2	-
		714-10-19220	• Seal Ring	1	-
		714-12-39210	• Seal Ring	5	-
		714-12-39230	• Seal Ring	6	-
		714-16-19210	• Seal Ring	1	-
		714-16-19230	• Seal Ring	1	-
		714-21-19810	• Seal Ring	2	-
K02		714-07-05151	Service Kit, Transmission		90216-
			With Lockup Type		
		02896-61008	• O-ring	1	-
		02896-61009	• O-ring	2	-
		07000-72012	• O-ring	1	-
		07000-72015	• O-ring	2	-
		07000-72065	• O-ring	1	-
		07000-73022	• O-ring	1	-
		07000-73025	• O-ring	1	-
		07000-73028	• O-ring	4	-
		07000-73030	• O-ring	1	-
		07000-73035	• O-ring	3	-
		07000-73048	• O-ring	2	-
		07000-75065	• O-ring	1	-
		07000-75085	• O-ring	1	-
		07000-75130	• O-ring	2	-
		07000-75150	• O-ring	3	-
		07000-75270	• O-ring	2	-
		07000-75295	• O-ring	1	-
		07000-75305	• O-ring	1	-
		07000-75475	• O-ring	1	-
		07000-A5270	• O-ring	1	-
		07000-A6220	• O-ring	1	-

FIG. KIT Service Kit Parts (2/4)

Index	Code	Part Number	Description	Qty	Serial Number
		07000-A6275	• O-ring	1	-
		07001-06225	• Ring, Back-up	1	-
		07001-06280	• Ring, Back-up	1	-
		07002-61023	• O-ring	12	-
		07002-61223	• O-ring	1	-
		07002-61423	• O-ring	7	-
		07002-61623	• O-ring	4	-
		07002-62034	• O-ring	3	-
		07002-62434	• O-ring	1	-
		07005-01012	• Seal, Washer	6	-
		07005-01212	• Seal, Washer	2	-
		07005-01612	• Seal, Washer	4	-
		07012-50105	• Seal, Oil	1	-
		113-15-12840	• Seal Ring	2	-
		144-15-22881	• Seal Ring	2	-
		195-13-12711	• Seal Ring	1	-
		419-15-12122	• Ring	3	-
		425-15-28710	• Seal, Dust	1	-
		714-07-00310	• Shim Assembly	1	-
		714-07-00320	• Shim Assembly	1	-
		714-07-00330	• Shim Assembly	1	-
		714-07-18541	• Seal, Dust	1	-
		714-07-19320	• Seal Ring	2	-
		714-07-39120	• Seal, Oil	1	-
		714-07-49210	• Seal Ring	2	-
		714-07-49220	• Seal Ring	2	-
		714-08-19210	• Seal Ring	1	-
		714-08-19230	• Seal Ring	2	-
		714-10-19220	• Seal Ring	1	-
		714-12-39210	• Seal Ring	5	-
		714-12-39230	• Seal Ring	6	-
		714-16-19210	• Seal Ring	1	-
		714-16-19230	• Seal Ring	1	-
		714-21-19810	• Seal Ring	2	-
K03		714-07-05160	Service Kit, Transmission Control Valve With Lockup Type		90216-
		07000-71007	• O-ring	7	-
		07000-72012	• O-ring	5	-
		07000-72015	• O-ring	50	-
		07000-73022	• O-ring	6	-
		07000-73030	• O-ring	5	-
		07002-61023	• O-ring	11	-
		07002-61223	• O-ring	16	-
		07002-61823	• O-ring	1	-
		07002-62034	• O-ring	1	-
		07002-63034	• O-ring	4	-
K04		714-07-05130	Service Kit, Transmission Without Lockup Type		90216-
		02896-61008	• O-ring	1	-
		02896-61009	• O-ring	2	-
		07000-72012	• O-ring	1	-
		07000-72015	• O-ring	2	-
		07000-72065	• O-ring	1	-
		07000-73022	• O-ring	1	-
		07000-73025	• O-ring	1	-
		07000-73028	• O-ring	4	-
		07000-73030	• O-ring	1	-
		07000-73035	• O-ring	3	-
		07000-73048	• O-ring	2	-
		07000-75065	• O-ring	1	-
		07000-75085	• O-ring	1	-
		07000-75130	• O-ring	2	-
		07000-75150	• O-ring	3	-
		07000-75270	• O-ring	2	-
		07000-75295	• O-ring	1	-
		07000-75305	• O-ring	1	-
		07000-75475	• O-ring	1	-
		07000-A5270	• O-ring	1	-
		07000-A6220	• O-ring	1	-
		07000-A6275	• O-ring	1	-
		07001-06225	• Ring, Back-up	1	-
		07001-06280	• Ring, Back-up	1	-
		07002-61023	• O-ring	12	-
		07002-61223	• O-ring	1	-
		07002-61423	• O-ring	7	-
		07002-61623	• O-ring	4	-
		07002-62034	• O-ring	3	-
		07002-62434	• O-ring	2	-
		07005-01012	• Seal, Washer	6	-
		07005-01212	• Seal, Washer	2	-

Index	Code	Part Number	Description	Qty	Serial Number
		07005-01612	• Seal, Washer	4	-
		07012-50105	• Seal, Oil	1	-
		195-13-12711	• Seal Ring	1	-
		419-15-12122	• Ring	3	-
		425-15-28710	• Seal, Dust	1	-
		714-07-00310	• Shim Assembly	1	-
		714-07-00320	• Shim Assembly	1	-
		714-07-00330	• Shim Assembly	1	-
		714-07-18541	• Seal, Dust	1	-
		714-07-19320	• Seal Ring	2	-
		714-07-39120	• Seal, Oil	1	-
		714-07-49210	• Seal Ring	2	-
		714-07-49220	• Seal Ring	2	-
		714-08-19210	• Seal Ring	1	-
		714-08-19230	• Seal Ring	2	-
		714-10-19220	• Seal Ring	1	-
		714-12-39210	• Seal Ring	4	-
		714-12-39230	• Seal Ring	6	-
		714-16-19210	• Seal Ring	1	-
		714-16-19230	• Seal Ring	1	-
K05		714-07-05131	Service Kit, Transmission Without Lockup Type		90216-
		02896-61008	• O-ring	1	-
		02896-61009	• O-ring	2	-
		07000-72012	• O-ring	1	-
		07000-72015	• O-ring	2	-
		07000-72065	• O-ring	1	-
		07000-73022	• O-ring	1	-
		07000-73025	• O-ring	1	-
		07000-73028	• O-ring	4	-
		07000-73030	• O-ring	1	-
		07000-73035	• O-ring	3	-
		07000-73048	• O-ring	2	-
		07000-75065	• O-ring	1	-
		07000-75085	• O-ring	1	-
		07000-75130	• O-ring	2	-
		07000-75150	• O-ring	3	-
		07000-75270	• O-ring	2	-
		07000-75295	• O-ring	1	-
		07000-75305	• O-ring	1	-
		07000-75475	• O-ring	1	-
		07000-A5270	• O-ring	1	-
		07000-A6220	• O-ring	1	-
		07000-A6275	• O-ring	1	-
		07001-06225	• Ring, Back-up	1	-
		07001-06280	• Ring, Back-up	1	-
		07002-61023	• O-ring	12	-
		07002-61223	• O-ring	1	-
		07002-61423	• O-ring	7	-
		07002-61623	• O-ring	4	-
		07002-62034	• O-ring	3	-
		07002-62434	• O-ring	1	-
		07005-01012	• Seal, Washer	6	-
		07005-01212	• Seal, Washer	2	-
		07005-01612	• Seal, Washer	4	-
		07012-50105	• Seal, Oil	1	-
		195-13-12711	• Seal Ring	1	-
		419-15-12122	• Ring	3	-
		425-15-28710	• Seal, Dust	1	-
		714-07-00310	• Shim Assembly	1	-
		714-07-00320	• Shim Assembly	1	-
		714-07-00330	• Shim Assembly	1	-
		714-07-18541	• Seal, Dust	1	-
		714-07-19320	• Seal Ring	2	-
		714-07-39120	• Seal, Oil	1	-
		714-07-49210	• Seal Ring	2	-
		714-07-49220	• Seal Ring	2	-
		714-08-19210	• Seal Ring	1	-
		714-08-19230	• Seal Ring	2	-
		714-10-19220	• Seal Ring	1	-
		714-12-39210	• Seal Ring	4	-
		714-12-39230	• Seal Ring	6	-
		714-16-19210	• Seal Ring	1	-
		714-16-19230	• Seal Ring	1	-
K06		714-07-05140	Service Kit, Transmission Control Valve .. Without Lockup Type		90216-
		07000-71007	• O-ring	7	-
		07000-72012	• O-ring	5	-
		07000-72015	• O-ring	50	-
		07000-73022	• O-ring	6	-

FIG. KIT Service Kit Parts (4/4)

Index	Code	Part Number	Description	Qty	Serial Number
		07000-73030	• O-ring	5	-
		07002-61023	• O-ring	10	-
		07002-61223	• O-ring	16	-
		07002-61823	• O-ring	1	-
		07002-62034	• O-ring	1	-
		07002-63034	• O-ring	4	-
K08		421-64-00010	Service Kit, Orbit-roll Steering Valve		90216-
		KB21001-00213	• O-ring	2	-
		KB95111-01000	• O-ring	2	-
		KB95111-01090	• O-ring	2	-
		KB95111-01200	• O-ring	2	-
		KB95111-02200	• O-ring	1	-
		KB95121-04000	• O-ring	2	-
		KB95712-01090	• Ring	2	-
		KB95712-02200	• Ring	1	-
		KBT1515-30001	• O-ring	1	-
K09		707-99-25710	Service Kit, Hydraulic Cylinder		90216-
		02896-11015	• O-ring	2	-
		07000-12085	• O-ring	1	-
		07000-12090	• O-ring	1	-
		07002-11023	• O-ring	1	-
		07002-12434	• O-ring	1	-
		07146-02086	• Ring, Back-up	1	-
		07156-00912	• Ring, Wear	1	-
		416-09-11130	• Seal, Dust	4	-
		707-44-90150	• Ring, Piston	1	-
		707-51-50030	• Packing, Rod	1	-
		707-51-50640	• Ring, Buffer	1	-
		707-56-50740	• Seal, Dust	1	-
K10		416-64-15480	Service Kit, Bearing		90216-
	C1		• Race	2	-
	C1		• Needle	1	-
K11		423-64-45610	Seal Kit		90216-
	C1		• O-ring	1	-
	C1		• Seal	1	-
	C1		• Seal	1	-
	C1		• O-ring	2	-
	C1		• O-ring	1	-
K12		707-99-57330	Service Kit, Hydraulic Cylinder		90216-
		07000-13035	• O-ring	2	-

Index	Code	Part Number	Description	Qty	Serial Number
		07000-15130	• O-ring	1	-
		07000-B5090	• O-ring	1	-
		07001-05090	• Ring, Back-up	2	-
		421-09-11320	• Seal, Dust	2	-
		707-35-91420	• Ring, Back-up	1	-
		707-39-14110	• Ring, Wear	2	-
		707-44-14150	• Ring, Piston	1	-
		707-51-95030	• Packing, Rod	1	-
		707-51-95650	• Ring, Buffer	1	-
		707-56-95740	• Seal, Dust	1	-
K13		707-99-66360	Service Kit, Hydraulic Cylinder		90216-
		07000-13035	• O-ring	1	-
		07000-15150	• O-ring	1	-
		07000-B5100	• O-ring	1	-
		07001-05100	• Ring, Back-up	2	-
		421-09-11350	• Seal, Dust	4	-
		707-35-91640	• Ring, Back-up	1	-
		707-39-16120	• Ring, Wear	2	-
		707-44-16190	• Ring, Piston	1	-
		707-51-10030	• Packing, Rod	1	-
		707-51-10650	• Ring, Buffer	1	-
		707-56-10740	• Seal, Dust	1	-
K14		707-99-67680	Service Kit, Hydraulic Cylinder		90216-
		07000-13035	• O-ring	1	-
		07000-15170	• O-ring	1	-
		07000-B5110	• O-ring	1	-
		07001-05110	• Ring, Back-up	2	-
		421-09-11350	• Seal, Dust	4	-
		707-35-91910	• Ring, Back-up	1	-
		707-39-18030	• Ring, Wear	2	-
		707-44-18150	• Ring, Piston	1	-
		707-51-11030	• Packing, Rod	1	-
		707-51-11650	• Ring, Buffer	1	-
		707-56-11740	• Seal, Dust	1	-

NUMERICAL INDEX

PartNumber	Page	Index
01010-61025	319	28
	331	32
01010-61035	301	1
01010-61225	317	18
	324	17
	329	19
	331	19
	331	23
	338	18
01010-61240	317	4
	329	4
01010-61440	318	11
	330	11
01010-61445	319	24
	323	10
	331	28
	335	13
01010-61460	81	5
01010-61470	411	13
01010-61630	484	25
01010-61645	317	13
	324	12
	329	13
	338	11
01010-61650	82	3
	300	3
	316	15
	328	15
01010-61660	82	4
	82	8
	396	15
01010-61665	502	6
	502	9
01010-62075	267	14
01010-80610	540	17
	552	11
01010-80612	535	12
	555	5
	590	6
	610	17
	611	2
	611	5
	611	8
	713	10
01010-80616	218	32
	223	32
	242	6
	251	19
	255	19
	258	27
	259	27
	263	25
	535	7
	538	10
	538	15
	538	18
	540	9
	555	2
	562	17
	562	27
	569	1
	572	2
	572	5
	576	2
	590	2
	621	14
	633	14
	655	11
	690	10
	690	15
	693	2
	713	4
	773	21
01010-80620	308	3
	585	17
	690	23
	692	17
	713	8
01010-80625	550	21
01010-80630	606	15
	607	13
01010-80635	522	17
01010-80640	512	25
01010-80816	183	2
	206	2
	263	6
	492	12
	513	37
	520	3
	523	4
	523	29
	642	23
	649	23
	657	23
	665	23
	690	32
	745	4
	746	23
	746	29
	746	40
01010-80820	82	10
	168	11
	168	17
	178	21
	189	9
	191	11
	191	17
	201	21
	212	9
	214	11
	214	17
	218	9
	223	9
	252	6
	258	31
	259	31
	264	2
	298	19
	522	21
	522	24
	540	5
	544	7
	565	3
	567	1
	626	21
	637	21
	643	45
	650	45
	658	45
	666	45
	745	11
	746	45
	875	17
	876	3
	877	15
	878	19
	879	5
01010-80825	258	18
	259	18
	517	7
	517	10
	561	2
	582	2
	596	2
	620	4
	630	4
	689	17
01010-80830	251	21
	255	21
	558	2
	593	2
	606	2
	607	2
01010-80835	263	13
	436	3
01010-80840	274	6
01010-80845	745	12
01010-80850	522	4
01010-80855	522	12
01010-80860	263	2
01010-80865	467	1
01010-80880	576	21
	672	2
01010-80895	177	5
	200	5
01010-81016	159	8
	162	3
	163	4
	163	7
	164	8
	175	41
	177	7
	187	21
	198	41
	200	7
	210	21
	222	2
	222	7
	227	2
	227	7
	246	4
	257	5
	257	15
	394	31
	528	9
	567	5
	576	28
	578	27
	580	14
	582	15
	623	3
	642	6
	645	3
	649	6
	657	6
	661	19
	665	6
	669	18
	689	23
	690	29
	765	7
	810	8
01010-81020	76	27
	159	5
	159	22
	160	14
	160	17
	160	20
	160	26
	160	33
	164	5
	164	22
	165	14
	165	17
	165	20
	165	26
	165	33
	174	5
	178	7
	180	9
	180	12
	180	22
	181	15
	183	9
	187	16

PartNumber	Page	Index
	189	7
	189	12
	197	5
	201	7
	203	9
	203	12
	203	22
	204	15
	206	9
	210	16
	212	7
	212	12
	215	5
	220	14
	220	16
	221	5
	221	8
	225	14
	225	16
	226	5
	226	8
	235	5
	235	16
	236	2
	236	7
	236	11
	239	5
	239	16
	241	3
	241	8
	241	12
	243	2
	243	6
	243	11
	243	14
	243	17
	243	20
	243	23
	244	9
	244	17
	245	9
	245	17
	246	2
	246	7
	246	10
	246	13
	246	16
	246	19
	246	22
	246	25
	246	33
	246	37
	247	41
	248	3
	248	6
	248	11
	248	14
	248	17
	248	27
	248	31
	248	35
	249	43
	250	2
	251	3
	251	9
	251	15
	253	8
	254	9
	255	3
	255	9
	255	14
	256	9
	257	9
	263	19
	263	22
	290	22
	290	30
	291	44
	293	30
	294	8
	294	19
	300	12
	304	1
	304	5
	304	8
	306	10
	306	14
	309	8
	309	19
	335	6
	343	27
	345	18
	370	37
	423	13
	427	12
	428	14
	428	21
	428	24
	428	37
	430	8
	436	5
	438	44
	439	17
	440	15
	444	2
	444	18
	450	17
	451	23
	451	26
	452	2
	452	12
	453	4
	453	7
	453	22
	453	25
	454	14
	454	17
	456	24
	456	27
	457	2
	457	18
	463	16
	469	10
	471	10
	503	6
	503	12
	504	5
	506	6
	506	12
	507	5
	507	9
	508	15
	509	5
	509	11
	509	18
	509	26
	510	6
	510	16
	510	20
	512	9
	512	20
	512	26
	528	6
	543	17
	552	9
	552	18
	552	21
	552	28
	562	15
	562	22
	576	7
	576	24
	578	9
	580	2
	580	8
	580	29
	581	38
	585	9
	585	12
	585	15
	586	5
	586	8
	586	11
	586	14
	604	8
	604	11
	606	6
	607	5
	607	7
	607	16
	608	16
	609	5
	609	8
	620	9
	620	15
	621	3
	621	9
	626	2
	626	6
	626	9
	626	25
	627	16
	627	19
	627	22
	627	26
	627	29
	627	33
	630	9
	630	15
	633	3
	633	9
	637	2
	637	6
	637	9
	637	25
	638	18
	638	21
	638	24
	638	28
	638	31
	638	35
	646	18
	646	21
	646	24
	646	27
	647	31
	647	35
	648	10
	652	17
	652	20
	652	23
	652	25
	652	29
	653	33
	654	17
	661	17
	661	22
	661	25
	661	28
	662	32
	663	26
	664	48
	669	16
	669	21
	669	24

PartNumber	Page	Index
	669	26
	669	30
	670	26
	671	48
	689	14
	693	6
	693	10
	700	46
	702	4
	703	7
	703	13
	703	24
	704	45
	705	8
	705	11
	706	3
	706	7
	707	4
	709	7
	709	13
	709	24
	710	45
	718	10
	718	12
	718	14
	718	20
	718	22
	718	24
	719	42
	720	8
	721	12
	722	9
	722	14
	722	29
	724	12
	724	30
	729	5
	730	5
	733	16
	735	9
	735	13
	745	16
	746	33
	756	9
	756	13
	757	17
	765	5
	765	11
01010-81022	77	5
01010-81025	81	9
	101	18
	159	10
	159	14
	159	17
	159	20
	160	2
	160	6
	160	30
	164	10
	164	14
	164	17
	164	20
	164	26
	165	2
	165	6
	165	30
	168	15
	168	24
	168	34
	168	38
	169	48
	170	23
	180	19
	181	19
	183	5
	184	3
	189	3
	191	15
	191	24
	191	34
	191	38
	192	48
	193	23
	203	19
	204	19
	206	5
	207	3
	212	3
	214	15
	214	24
	214	34
	218	4
	218	17
	223	4
	223	17
	232	8
	233	8
	240	7
	242	2
	244	6
	244	13
	245	6
	245	13
	246	29
	248	22
	251	5
	251	11
	255	5
	255	11
	257	17
	258	7
	259	7
	292	7
	292	24
	300	22
	344	6
	344	15
	347	6
	418	19
	421	20
	421	26
	421	35
	426	9
	426	13
	429	40
	435	15
	437	14
	437	17
	438	48
	438	51
	438	55
	442	21
	444	21
	444	24
	450	15
	453	9
	454	6
	457	21
	457	24
	460	8
	464	14
	469	14
	471	14
	510	2
	510	22
	512	33
	520	14
	520	17
	520	25
	540	25
	542	14
	578	15
	580	11
	580	17
	580	20
	580	23
	586	17
	586	21
	600	11
	607	10
	607	18
	608	14
	618	2
	621	5
	623	10
	627	7
	633	5
	638	9
	640	2
	645	10
	648	15
	648	18
	654	25
	655	8
	656	2
	663	17
	670	17
	696	15
	696	18
	700	48
	702	9
	702	12
	702	16
	702	21
	703	2
	703	35
	704	38
	704	47
	705	2
	705	13
	707	9
	707	12
	707	16
	707	21
	709	2
	709	35
	709	38
	710	47
	716	4
	718	28
	720	3
	723	10
	724	3
	724	7
	726	10
	726	16
	727	14
	727	17
	727	22
	728	14
	728	17
	728	22
	732	23
	732	26
	746	38
	750	23
	750	26
	759	5
	765	13
01010-81030	76	29
	94	3
	253	14
	256	15
	269	18
	269	35

PartNumber	Page	Index
	290	13
	292	11
	294	10
	307	1
	307	12
	309	10
	434	1
	452	9
	465	13
	468	2
	509	22
	552	7
	572	8
	580	26
	605	16
	607	21
	626	32
	627	10
	632	1
	637	32
	638	12
	642	1
	643	30
	648	6
	649	1
	650	30
	655	4
	657	1
	658	30
	660	2
	663	6
	663	20
	665	1
	666	30
	667	2
	670	6
	670	20
	713	1
	717	8
	727	30
	728	30
01010-81035	76	25
	101	19
	168	21
	178	19
	190	4
	191	21
	201	19
	213	4
	214	21
	249	46
	273	33
	302	5
	303	12
	303	15
	424	31
	432	1
	436	16
	447	30
	578	25
	745	14
01010-81040	160	35
	165	35
	181	4
	189	14
	204	4
	212	14
	263	31
	290	5
	290	9
	349	6
	452	14
	468	15
	578	20
	727	32
	728	32
01010-81045	187	19
	210	19
	290	32
	294	13
	294	21
	298	17
	309	13
	309	21
	605	13
	765	9
01010-81050	63	14
	70	14
	168	32
	170	20
	191	32
	193	20
	214	32
	269	27
	446	15
	448	33
	458	15
	462	3
	463	10
	746	21
	746	27
01010-81055	93	4
	284	4
	289	28
	292	4
	308	10
	454	11
	460	13
	464	17
	578	13
	762	27
01010-81060	174	37
	181	12
	197	37
	204	12
	290	11
	306	7
	428	27
	437	9
	444	15
	446	22
	450	9
	457	15
	458	22
	468	7
	468	11
	520	23
	606	9
01010-81065	278	25
	284	6
	307	7
	423	7
	439	5
	440	5
	564	7
	716	1
01010-81070	586	25
01010-81075	269	7
	294	25
	300	26
	309	25
01010-81080	169	42
	192	42
	283	5
	283	16
	451	5
	455	13
	456	6
	626	29
	637	29
	648	3
	663	3
	670	3
01010-81085	572	10
01010-81090	442	17
01010-81095	442	12
	451	4
	456	5
01010-81220	345	28
	345	33
	401	12
	488	4
	734	30
	810	2
01010-81225	90	2
	178	17
	182	5
	201	17
	205	5
	261	2
	262	2
	276	33
	305	12
	343	29
	344	9
	421	23
	510	13
	713	16
	721	8
	729	8
	730	8
	732	2
	732	13
	732	19
	733	7
	733	20
	734	23
	734	26
	735	1
	735	4
	737	23
	737	26
	750	2
	750	13
	750	19
	751	23
	751	26
	756	1
	756	4
	774	3
	810	5
01010-81230	170	8
	170	11
	174	19
	174	22
	174	28
	182	3
	193	8
	193	11
	197	19
	197	22
	197	28
	205	3
	260	1
	276	23
	343	1
	343	12
	423	10
	426	19
	435	22
	439	28
	440	27
	442	7
	451	14
	456	15

PartNumber	Page	Index
	510	9
	520	11
	528	3
	694	3
	701	6
	713	13
	717	2
	732	4
	750	4
	762	2
	762	10
	763	2
	763	8
	764	2
	764	5
	766	3
	767	3
	770	3
	813	9
01010-81235	298	23
	307	18
	484	10
	492	6
	502	13
	517	3
	699	2
	713	19
	729	2
	730	2
01010-81240	269	33
	276	5
	276	11
	276	30
	277	38
	277	41
	296	9
	344	11
	419	7
	420	11
	420	23
	420	27
	451	10
	456	11
	484	4
	605	9
	729	11
	730	11
	762	4
	762	12
	769	12
01010-81245	345	4
	345	8
	345	12
	419	15
	420	4
	424	3
	769	13
	835	37
	837	8
	838	37
01010-81250	258	13
	259	13
	443	8
	484	19
	573	6
	732	7
	750	7
01010-81255	654	14
	699	4
01010-81260	453	14
	453	19
01010-81265	430	25
	437	36
	439	7
	440	7
	718	34
	718	36
	718	40
01010-81270	170	6
	193	6
	439	9
	564	20
	718	38
01010-81275	654	20
01010-81280	303	3
	303	9
	421	32
01010-81285	166	3
	295	6
	296	17
	310	5
	443	12
01010-81290	420	10
	420	22
01010-81420	160	22
	165	22
01010-81425	254	2
	257	20
01010-81430	160	10
	165	10
	426	2
	435	6
	608	8
01010-81435	469	17
	471	17
	702	1
	707	1
01010-81440	605	7
01010-81445	185	1
	208	1
01010-81460	170	13
	193	13
01010-81490	742	3
01010-81630	344	2
	808	16
	808	21
	809	3
	809	12
	809	22
	811	15
	811	20
	812	16
	812	21
	814	16
	814	21
	833	5
	833	11
	834	5
	834	11
	837	12
	837	17
01010-81635	426	16
	434	4
01010-81640	135	2
	138	2
	362	1
	368	1
	371	1
	372	1
	387	1
	391	1
	479	3
	480	3
	481	3
	482	3
	483	3
	484	29
01010-81645	347	1
	349	1
	419	4
01010-81650	419	1
01010-81685	362	4
	368	4
	371	4
	372	4
	387	4
	391	4
01010-81875	828	14
	830	14
01010-82055	617	2
01010-82085	835	18
01010-82095	835	19
01010-82485	220	3
	225	3
01010-D0610	542	35
01010-D0612	540	28
	600	33
01010-D0620	542	7
	543	8
	600	4
01010-D0825	760	19
	760	23
01010-D0835	520	8
01010-D1016	178	2
	201	2
	491	1
	736	5
	740	2
	740	11
	753	5
01010-D1020	175	44
	176	3
	178	9
	178	30
	198	44
	199	3
	201	9
	201	30
	232	2
	233	2
	235	7
	235	11
	237	2
	237	5
	239	7
	239	11
	240	2
	494	15
	523	32
	526	13
	542	17
	600	14
	701	9
	721	20
	736	3
	736	10
	736	15
	736	18
	740	4
	740	13
	740	25
	753	3
	753	10
	753	15
	753	18
	761	3
	761	13
	762	7
	762	15
	762	23
	763	5
	763	11
	763	19
	764	12
	769	17

PartNumber	Page	Index
	769	20
	769	23
	769	26
01010-D1025	177	3
	200	3
	218	13
	222	9
	223	13
	227	9
	497	7
	526	3
	723	6
	740	27
	740	31
	741	35
	755	30
	755	34
	755	38
	760	6
	760	36
	761	9
	766	19
	766	35
	767	22
	768	38
	770	19
	770	35
	773	4
	773	8
	773	12
01010-D1030	189	22
	212	22
	215	7
	249	40
	703	26
	709	26
	740	20
01010-D1035	762	21
	763	17
	764	10
	773	14
01010-D1045	248	37
01010-D1050	176	5
	199	5
	767	21
01010-D1055	766	31
	767	34
	770	31
01010-D1220	490	8
	490	14
	493	8
	493	14
	494	13
	497	5
	701	3
	721	18
	740	6
	740	15
01010-D1225	490	17
	490	20
	493	17
	493	20
	508	5
	760	11
	760	29
	769	9
01010-D1230	174	25
	197	25
	455	6
	760	10
	766	9
	766	11
	767	9
	767	11
	769	3
	769	5
	770	9
	770	11
	771	5
	772	5
01010-D1235	393	9
	489	7
	499	7
	766	7
	766	22
	767	7
	767	25
	770	7
	770	22
01010-D1245	174	31
	197	31
	769	7
01010-D1250	451	17
	451	20
	456	18
	456	21
	760	16
01010-D1635	362	13
	368	13
	371	13
	372	13
	387	13
	391	13
01010-E1025	58	8
	58	9
	58	13
01010-E1030	58	10
	63	7
	63	11
	70	7
	70	11
01010-E1045	56	8
01010-E1060	63	12
	70	12
01010-E1080	53	7
01010-E1085	61	18
	68	18
01011-61425	324	3
	338	3
01011-61615	295	22
	310	20
01011-62030	158	4
	339	4
01011-62035	321	2
	333	2
01011-62210	325	13
	336	13
01011-62405	267	19
01011-62420	315	11
	327	11
01011-62790	502	17
01011-81000	93	6
	293	33
	627	3
	638	5
	663	12
	670	12
01011-81005	93	7
01011-81010	93	8
	284	9
01011-81015	169	52
	192	52
01011-81020	284	8
01011-81030	82	5
01011-81050	421	10
01011-81095	55	11
01011-81205	345	3
01011-81215	276	26
	420	3
01011-81230	393	1
01011-82400	220	1
	225	1
	838	21
01011-82410	838	20
01011-E1005	61	2
	68	2
01016-51260	296	19
01016-52080	479	5
	480	5
	481	5
	482	5
	483	5
01020-01016	54	19
01023-10308	218	27
	223	27
01023-10510	610	10
	612	7
	613	7
	614	7
	615	7
	616	7
01023-10514	561	5
	596	5
01023-10614	551	11
01023-10616	551	4
01023-10620	555	11
	590	23
01023-20416	548	2
01023-20612	525	10
	583	2
01023-60412	577	35
	612	3
	613	3
	614	3
	615	3
	616	2
01023-60420	580	4
01023-60430	538	8
01023-60616	576	33
01023-60620	576	19
01023-70412	492	4
01023-80516	576	31
01050-31645	83	4
01050-51040	571	2
01050-51225	79	6
01050-51255	131	17
01050-61045	55	2
01050-61240	56	11
01050-61260	266	7
	267	21
	268	5
01051-51430	84	4
	85	4
01051-51635	84	3
	85	3
01051-62220	298	4
01220-40308	568	23
01220-40312	568	24
01220-40408	232	15
	232	16
	233	15
	233	16
	240	14
	240	15
	568	25
01220-40412	568	26
01220-40420	548	6
01220-40425	258	25
	259	25
01220-40616	604	5
01224-40612	545	7
	545	15
01224-40616	538	31
	545	11
01224-40620	622	10

PartNumber	Page	Index
	634	10
	644	10
01224-70412	542	10
	545	18
	600	7
01225-70516	588	3
01225-70610	692	28
01225-70612	573	16
	692	15
01225-70616	525	4
	525	8
	525	16
	538	33
	541	43
	544	18
	573	15
	692	5
01225-70620	525	5
	535	3
	544	17
	550	5
	563	2
	563	5
	563	11
	563	14
	611	12
	692	26
	692	30
01235-40530	235	
	239	
01240-00616	538	2
	542	21
	600	18
01240-01020	541	41
01245-00616	622	13
	634	13
	644	13
01252-30625	631	15
	659	15
01252-40625	267	12
01252-60516	141	39
01252-60612	415	38
01252-60616	171	23
	194	23
	357	19
	380	19
	402	9
01252-60625	641	3
01252-60635	401	6
	405	25
	406	3
	407	25
	408	4
01252-60640	416	6
01252-60650	406	2
	408	5
01252-60816	320	8
	332	8
01252-60820	354	12
	358	25
	365	9
	377	12
	380	25
	385	10
	389	9
01252-60825	171	35
	194	35
	424	26
01252-60830	416	13
	712	17
01252-60835	359	26
	367	1
	382	26
	390	1
01252-60840	358	24
	359	5
	359	8
	365	15
	380	24
	382	5
	382	8
	389	15
01252-60845	171	16
	194	16
	358	48
	381	48
	385	23
01252-60860	352	11
	375	11
01252-61025	359	23
	382	23
01252-61045	359	22
	365	29
	382	22
	389	29
01252-61230	397	16
01252-61235	402	11
01252-61250	419	13
01252-61255	173	3
	196	3
01252-61275	711	13
01252-61445	418	16
01252-61645	398	27
	399	8
01252-70516	343	22
01252-70650	282	32
	289	1
	308	1
	643	33
	650	33
	658	33
	666	33
01252-70816	517	2
01252-70820	528	2
	618	6
	618	8
	618	10
	640	6
	640	8
	640	10
	656	6
	656	8
	656	10
01252-71040	828	33
	830	33
01252-71055	712	13
01252-80520	546	5
01252-90510	279	26
	281	21
	285	24
	287	21
	289	16
01252-A1016	754	4
	754	7
	754	14
	754	17
	754	21
	754	28
01253-61200	418	12
01253-61625	417	15
01253-71210	433	11
01310-01216	828	22
	830	22
	835	28
01310-01225	838	28
01435-00612	59	24
	66	24
	76	20
01435-00616	50	9
01435-00625	119	39
01435-00630	116	8
	116	11
	116	19
	116	23
	119	36
01435-00635	119	26
01435-00640	523	13
01435-00816	86	33
	126	14
	126	35
01435-00820	59	32
	66	32
	145	13
01435-00825	65	6
	72	6
	102	14
	508	3
01435-00830	55	6
	65	10
	72	10
01435-00835	65	14
	72	14
01435-00840	65	25
	72	25
	99	17
	100	17
	145	2
01435-00845	59	27
	66	27
	145	12
01435-00870	118	16
01435-00895	59	26
	66	26
01435-01016	88	32
	141	25
01435-01020	56	18
	61	11
	63	20
	65	8
	65	12
	65	36
	68	11
	70	20
	71	33
	72	8
	72	12
	72	36
	87	15
	87	16
	87	24
	88	15
	88	16
	88	24
	92	12
	99	12
	99	14
	100	12
	100	14
	106	26
	106	32
	119	14
	119	31
	126	23
	135	5
	135	7
	138	5
	138	7
	139	13
	139	25
	139	34
	139	38
	141	14
	141	29
01435-01025	50	6
	50	32

PartNumber	Page	Index
	55	20
	55	22
	55	28
	58	6
	61	6
	61	16
	63	23
	63	26
	64	7
	64	17
	68	6
	68	16
	70	23
	70	26
	71	7
	71	17
	76	3
	76	14
	76	16
	87	21
	88	21
	98	16
	98	17
	98	19
	103	1
	106	4
	106	29
	106	35
	108	14
	116	4
	116	6
	116	16
	119	33
	124	9
	125	9
	128	5
	139	10
	139	16
	540	31
	542	23
	554	4
	589	4
	600	20
01435-01030	56	3
	56	21
	65	34
	72	34
	107	40
	119	2
	121	7
	121	10
	125	11
	126	26
	128	2
	145	5
01435-01035	50	26
	56	16
	61	9
	63	4
	64	34
	65	22
	68	9
	70	4
	72	22
	99	6
	100	6
	106	5
	108	12
	113	1
	125	10
	126	27
	128	3
	141	23
01435-01040	50	21
	64	10
	71	10
	119	3
	119	8
	141	8
01435-01045	55	30
	116	21
	119	5
01435-01050	61	15
	68	15
	88	30
	106	11
	115	1
	119	23
	119	29
	141	2
	141	18
	142	42
	145	10
01435-01055	131	6
	139	7
	140	50
	141	4
01435-01060	64	36
	71	35
	88	35
	98	7
	98	10
	126	33
	145	7
01435-01065	55	15
	64	31
	71	31
	103	2
	107	44
	139	21
01435-01070	50	14
	79	1
	116	14
01435-01075	58	4
01435-01080	50	3
	50	15
	79	2
	103	3
01435-01085	55	13
	63	28
	70	28
	145	6
01435-01090	61	8
	63	18
	68	8
	70	18
	108	2
	131	8
	139	31
	141	11
01435-01095	55	24
	125	6
	140	51
	141	28
01435-01220	119	9
01435-01255	131	14
01435-01270	98	22
01435-40620	546	3
01435-41016	572	14
01436-01000	125	4
01436-01005	125	2
01436-01010	98	8
	106	12
01436-01015	139	3
01436-01020	61	12
	68	12
01436-01025	126	19
01436-01030	50	2
	139	4
01436-01035	108	4
01436-01060	50	20
	106	2
01436-01065	140	45
	141	35
01436-01070	140	41
01436-01085	106	19
01437-01025	127	43
01437-01065	124	3
01437-01075	78	6
	79	3
	118	7
01437-10816	50	23
01438-01020	52	23
01530-05814	298	26
01546-10812	523	11
01580-01008	76	31
01580-02016	267	16
01580-02722	502	19
01580-03024	322	5
01580-10302	218	28
	223	28
01580-10403	538	7
	616	3
01580-10504	525	19
01580-10605	622	6
	634	6
	644	6
01580-10806	398	24
	522	7
	522	15
	522	37
	526	10
	572	19
	620	3
	623	8
	630	3
	642	20
	645	8
	649	20
	657	20
	660	11
	665	20
	667	11
01580-11008	159	24
	164	24
	232	4
	233	4
	234	3
	240	4
	492	15
	541	38
	562	8
	627	4
	638	6
	648	12
	663	14
	670	14
	759	8
	760	33
	760	39
01580-11210	166	5
	261	5
	262	5
	393	3
	465	16
01580-11411	131	12
	605	19
01580-12016	479	7
	480	7
	481	7
	482	7
	483	7
01580-60403	580	6
01582-01008	78	13
	78	18

PartNumber	Page	Index
01582-11210	413	16
	564	10
	564	17
01583-01811	117	3
01583-11207	414	
01583-11408	400	12
01583-11610	311	21
	313	21
	325	20
	336	20
	522	35
01583-12012	174	3
	197	3
01584-00504	235	
	239	
01584-01008	55	27
	76	18
	106	30
	106	36
	116	17
	141	32
	513	5
01584-01210	98	23
	131	15
01584-31008	760	9
01594-01008	572	12
01595-01210	564	12
	564	15
01596-00606	809	10
	809	20
01596-00807	703	17
	703	30
	709	17
	709	30
01596-01009	455	3
	697	24
	766	33
	767	36
	770	33
01596-03024	617	5
01597-01009	50	35
	92	14
	180	18
	203	18
	244	5
	245	5
	323	9
	421	19
	423	5
	427	21
	435	11
	435	20
	439	26
	440	24
	443	16
	446	18
	446	28
	447	21
	447	23
	448	37
	458	18
	458	28
	462	10
	463	13
	464	3
	464	7
	464	11
	606	13
	699	22
	714	49
	722	8
	722	19
	722	24
	722	28
	723	15
	723	19
	724	35
	725	41
	813	13
	828	32
	830	32
	835	30
	838	30
01598-00608	562	31
01601-20307	568	27
01601-20410	568	28
	612	4
	613	4
	614	4
	615	4
01601-20513	343	23
01601-50513	546	6
01602-20619	267	13
01602-20825	258	19
	259	19
01602-21030	571	3
01640-20408	580	5
	616	4
01640-20508	525	18
01640-20610	118	14
	159	2
	164	2
	538	22
	540	12
	550	24
	643	39
	643	42
	650	39
	650	42
	658	39
	658	42
	666	39
	666	42
01640-20816	542	30
	600	27
	737	30
01640-21016	73	5
	73	10
	178	25
	201	25
	523	18
	523	24
	746	48
	752	30
01640-21223	166	4
01640-21323	131	3
	738	34
	752	34
01640-21626	689	5
01640-22232	489	9
	499	9
01641-20405	232	17
	233	17
	240	16
01641-20608	737	8
	737	18
	751	8
	751	18
	809	11
	809	21
01641-20812	232	12
	233	12
	240	11
	522	28
	522	32
01641-21016	737	5
	737	15
	751	5
	751	15
01641-50508	588	4
01643-22460	815	8
	816	10
	817	8
	818	4
01643-30623	60	42
	67	42
	218	33
	223	33
	242	7
	251	20
	255	20
	258	28
	259	28
	263	26
	308	4
	357	20
	380	20
	522	18
	535	8
	535	13
	538	11
	538	16
	538	19
	538	21
	540	10
	540	11
	540	18
	550	22
	550	23
	552	12
	555	3
	555	6
	555	14
	562	18
	562	28
	562	30
	569	2
	571	4
	572	3
	572	6
	576	3
	585	18
	590	3
	590	7
	590	26
	604	6
	606	16
	607	14
	610	18
	611	3
	611	6
	611	9
	621	15
	622	5
	633	15
	634	5
	643	38
	644	5
	650	38
	655	12
	658	38
	666	38
	690	11
	690	16
	690	24
	692	18
	693	3
	713	5
	713	9
	773	22
01643-30823	82	11
	126	36
	168	12
	168	18
	178	22

PartNumber	Page	Index
	183	3
	189	10
	191	12
	191	18
	201	22
	206	3
	212	10
	214	12
	214	18
	218	10
	223	10
	251	22
	252	7
	255	22
	257	3
	257	7
	258	32
	259	32
	263	3
	263	7
	263	14
	264	3
	274	7
	298	20
	436	4
	467	2
	492	13
	513	38
	517	8
	517	11
	520	4
	522	5
	522	6
	522	13
	522	14
	522	22
	522	25
	523	5
	523	30
	526	9
	540	6
	544	8
	558	3
	561	3
	565	4
	567	2
	576	22
	582	3
	593	3
	596	3
	605	3
	606	3
	607	3
	620	2
	620	5
	623	7
	626	22
	630	2
	630	5
	637	22
	642	24
	643	46
	645	7
	649	24
	650	46
	657	24
	658	46
	665	24
	666	46
	672	3
	689	18
	690	33
	703	18
	703	31
	709	18
	709	31
	745	13
	746	24
	746	30
	746	41
	746	46
	875	18
	876	4
	877	16
	878	20
	879	6
01643-31032	50	18
	50	34
	55	17
	55	26
	56	6
	56	19
	58	11
	58	14
	61	3
	61	19
	63	8
	63	13
	63	15
	64	11
	64	37
	65	37
	68	3
	68	19
	70	8
	70	13
	70	15
	71	11
	71	36
	72	37
	76	13
	76	17
	76	28
	76	30
	76	32
	78	8
	78	9
	88	36
	88	39
	92	15
	93	5
	93	9
	94	4
	101	20
	106	20
	106	28
	106	34
	107	39
	107	43
	119	15
	121	11
	135	8
	138	8
	139	8
	139	17
	139	28
	139	35
	139	39
	140	42
	140	46
	140	52
	141	5
	141	9
	141	20
	141	26
	141	31
	159	6
	159	9
	159	11
	159	15
	159	18
	159	21
	159	23
	160	3
	160	7
	160	15
	160	18
	160	21
	160	27
	160	28
	160	31
	160	34
	160	36
	162	4
	163	5
	163	8
	164	6
	164	9
	164	11
	164	15
	164	18
	164	21
	164	23
	164	27
	165	3
	165	7
	165	15
	165	18
	165	21
	165	27
	165	28
	165	31
	165	34
	165	36
	168	16
	168	22
	168	25
	168	33
	168	35
	168	39
	169	43
	169	49
	169	53
	170	21
	170	24
	174	6
	174	38
	175	42
	177	8
	178	8
	178	20
	178	32
	180	10
	180	13
	180	17
	180	20
	180	23
	181	5
	181	13
	181	16
	181	20
	183	6
	183	10
	184	4
	187	17
	187	20
	187	22
	189	4
	189	8
	189	13
	189	15
	190	5
	191	16
	191	22
	191	25

PartNumber	Page	Index
	191	33
	191	35
	191	39
	192	43
	192	49
	192	53
	193	21
	193	24
	197	6
	197	38
	198	42
	200	8
	201	8
	201	20
	201	32
	203	10
	203	13
	203	17
	203	20
	203	23
	204	5
	204	13
	204	16
	204	20
	206	6
	206	10
	207	4
	210	17
	210	20
	210	22
	212	4
	212	8
	212	13
	212	15
	213	5
	214	16
	214	22
	214	25
	214	33
	214	35
	215	6
	218	5
	218	18
	220	15
	220	17
	221	6
	221	9
	222	3
	222	8
	223	5
	223	18
	225	15
	225	17
	226	6
	226	9
	227	3
	227	8
	232	9
	233	9
	234	4
	235	6
	235	17
	236	3
	236	8
	236	12
	239	6
	239	17
	240	8
	241	4
	241	9
	241	13
	242	3
	243	3
	243	7
	243	12
	243	15
	243	18
	243	21
	243	24
	244	4
	244	7
	244	10
	244	14
	244	18
	245	4
	245	7
	245	10
	245	14
	245	18
	246	3
	246	5
	246	8
	246	11
	246	14
	246	17
	246	20
	246	23
	246	26
	246	30
	246	34
	247	38
	247	42
	248	4
	248	7
	248	12
	248	15
	248	18
	248	23
	248	28
	248	32
	248	36
	249	44
	249	47
	250	3
	251	4
	251	6
	251	10
	251	12
	251	16
	253	9
	253	15
	254	10
	255	4
	255	6
	255	10
	255	12
	255	15
	256	10
	256	16
	257	6
	257	10
	257	16
	257	18
	258	8
	259	8
	263	20
	263	23
	263	32
	269	8
	269	19
	269	28
	269	36
	273	34
	278	26
	283	6
	283	17
	284	5
	284	7
	284	10
	289	29
	290	6
	290	10
	290	12
	290	14
	290	23
	290	31
	291	33
	291	45
	292	5
	292	8
	292	12
	292	25
	293	31
	293	34
	294	9
	294	11
	294	14
	294	20
	294	22
	294	26
	298	18
	300	13
	300	23
	300	27
	301	2
	302	6
	303	13
	303	16
	304	2
	304	6
	304	9
	306	8
	306	11
	306	15
	307	2
	307	8
	307	13
	308	11
	309	9
	309	11
	309	14
	309	20
	309	22
	309	26
	319	29
	323	8
	331	33
	335	7
	343	28
	344	7
	344	16
	345	19
	347	7
	349	7
	370	38
	394	32
	421	18
	421	21
	421	27
	422	36
	423	4
	423	14
	424	32
	426	10
	426	14
	427	13
	427	20
	428	15
	428	22
	428	25
	428	28
	429	38
	429	41
	430	9
	432	2

PartNumber	Page	Index
	434	2
	435	10
	435	16
	435	19
	436	6
	436	17
	437	10
	437	15
	437	18
	438	45
	438	49
	438	52
	438	56
	439	6
	439	18
	439	25
	440	6
	440	16
	440	23
	442	13
	442	18
	442	22
	443	17
	444	3
	444	16
	444	19
	444	22
	444	25
	446	16
	446	23
	446	29
	447	20
	447	22
	447	31
	448	34
	448	36
	450	10
	450	16
	450	18
	451	6
	451	24
	451	27
	452	3
	452	10
	452	13
	452	15
	453	5
	453	8
	453	10
	453	23
	453	26
	454	7
	454	12
	454	15
	454	18
	455	4
	455	14
	456	7
	456	25
	456	28
	457	3
	457	16
	457	19
	457	22
	457	25
	458	16
	458	23
	458	29
	460	9
	460	14
	462	4
	462	11
	463	14
	463	17
	464	4
	464	8
	464	12
	464	15
	465	14
	468	3
	468	8
	468	12
	468	16
	469	11
	469	15
	471	11
	471	15
	503	7
	503	13
	504	6
	506	7
	506	13
	507	6
	507	10
	508	16
	509	6
	509	12
	509	19
	509	23
	509	27
	510	3
	510	7
	510	17
	510	21
	510	23
	512	10
	512	21
	512	27
	512	34
	520	15
	520	18
	520	24
	520	26
	528	7
	528	10
	540	26
	540	32
	541	36
	542	15
	542	24
	543	18
	552	8
	552	10
	552	19
	552	22
	552	29
	562	7
	562	16
	562	23
	564	8
	567	6
	572	9
	572	11
	573	8
	576	8
	576	25
	576	29
	578	10
	578	14
	578	16
	578	21
	578	26
	578	28
	580	3
	580	9
	580	12
	580	15
	580	18
	580	21
	580	24
	580	27
	580	30
	581	39
	582	16
	585	10
	585	13
	585	16
	586	6
	586	9
	586	12
	586	15
	586	18
	586	22
	586	26
	600	12
	600	21
	604	9
	604	12
	605	14
	605	17
	606	7
	606	10
	606	14
	607	6
	607	8
	607	11
	607	17
	607	19
	607	22
	608	15
	608	17
	609	6
	609	9
	618	3
	620	10
	620	16
	621	4
	621	6
	621	10
	623	4
	623	11
	626	3
	626	7
	626	10
	626	26
	626	30
	626	33
	627	5
	627	8
	627	11
	627	17
	627	20
	627	23
	627	27
	627	30
	627	34
	630	10
	630	16
	632	2
	633	4
	633	6
	633	10
	637	3
	637	7
	637	10
	637	26
	637	30
	637	33
	638	7
	638	10
	638	13
	638	19
	638	22
	638	25
	638	29

PartNumber	Page	Index
	638	32
	638	36
	640	3
	642	2
	642	7
	643	31
	645	4
	645	11
	646	19
	646	22
	646	25
	646	28
	647	32
	647	36
	648	4
	648	7
	648	11
	648	13
	648	16
	648	19
	649	2
	649	7
	650	31
	652	18
	652	21
	652	24
	652	26
	652	30
	653	34
	654	18
	654	26
	655	5
	655	9
	656	3
	657	2
	657	7
	658	31
	660	3
	661	18
	661	20
	661	23
	661	26
	662	29
	662	33
	663	4
	663	7
	663	13
	663	15
	663	18
	663	21
	663	27
	664	49
	665	2
	665	7
	666	31
	667	3
	669	17
	669	19
	669	22
	669	25
	669	27
	669	31
	670	4
	670	7
	670	13
	670	15
	670	18
	670	21
	670	27
	671	49
	689	15
	689	24
	690	30
	693	7
	693	11
	696	16
	696	19
	697	25
	699	23
	700	47
	700	49
	702	5
	702	10
	702	13
	702	17
	702	22
	703	3
	703	8
	703	14
	703	25
	703	36
	704	39
	704	46
	704	48
	705	3
	705	9
	705	12
	705	14
	706	4
	706	8
	707	5
	707	10
	707	13
	707	17
	707	22
	709	3
	709	8
	709	14
	709	25
	709	36
	709	39
	710	46
	710	48
	713	2
	714	48
	716	2
	716	5
	717	9
	718	11
	718	13
	718	15
	718	21
	718	23
	718	25
	718	29
	719	43
	720	4
	720	9
	721	13
	722	7
	722	10
	722	15
	722	18
	722	23
	722	27
	722	30
	723	11
	723	14
	723	18
	724	4
	724	8
	724	13
	724	31
	724	34
	725	40
	726	11
	726	17
	727	15
	727	18
	727	23
	727	31
	727	33
	728	15
	728	18
	728	23
	728	31
	728	33
	729	6
	730	6
	732	24
	732	27
	733	17
	735	10
	735	14
	745	15
	745	17
	746	22
	746	28
	746	34
	746	39
	746	47
	746	49
	750	24
	750	27
	756	10
	756	14
	757	18
	759	6
	760	40
	762	28
	765	6
	765	8
	765	10
	765	12
	765	14
	810	9
	813	14
	828	31
	830	31
	835	31
	838	31
01643-31232	98	24
	131	16
	131	18
	170	5
	170	9
	170	12
	174	20
	174	23
	174	29
	178	18
	182	4
	182	6
	193	5
	193	9
	193	12
	197	20
	197	23
	197	29
	201	18
	205	4
	205	6
	260	2
	261	3
	261	4
	262	3
	262	4
	269	34
	276	24
	276	27
	295	7
	296	10
	296	20
	298	24
	303	4

PartNumber	Page	Index
	303	10
	305	13
	307	19
	310	6
	317	5
	317	19
	324	18
	329	5
	329	20
	331	20
	331	24
	338	19
	343	2
	343	13
	343	30
	344	10
	344	12
	345	13
	345	29
	345	34
	393	2
	413	15
	419	8
	419	16
	421	24
	421	33
	423	11
	424	4
	424	9
	426	20
	430	26
	435	23
	437	37
	439	8
	439	10
	439	29
	440	8
	440	28
	442	8
	443	9
	443	13
	451	11
	451	15
	453	15
	453	20
	456	12
	456	16
	484	5
	484	11
	484	20
	492	7
	502	14
	510	10
	510	14
	517	4
	528	4
	534	4
	564	13
	564	16
	564	21
	572	16
	605	10
	654	15
	654	21
	694	4
	696	3
	699	3
	699	5
	701	7
	713	14
	713	17
	713	20
	717	3
	718	35
	718	37
	718	39
	719	41
	721	9
	729	3
	729	9
	729	12
	730	3
	730	9
	730	12
	732	3
	732	5
	732	14
	732	20
	733	8
	734	21
	734	24
	734	27
	734	31
	735	2
	735	5
	737	24
	737	27
	750	3
	750	5
	750	14
	750	20
	751	24
	751	27
	756	2
	756	5
	762	3
	762	5
	762	11
	762	13
	763	3
	763	9
	764	3
	764	6
	766	4
	767	4
	770	4
	774	4
	810	3
	810	6
	835	38
	837	9
	838	38
01643-31445	160	11
	160	23
	165	11
	165	23
	185	2
	208	2
	254	3
	257	21
	318	12
	319	25
	324	4
	330	12
	331	29
	338	4
	351	27
	373	27
	411	14
	426	3
	435	7
	469	18
	471	18
	605	8
	608	9
	702	2
	707	2
	742	2
01643-31645	83	5
	86	7
	295	23
	300	4
	310	21
	316	16
	317	14
	324	13
	328	16
	329	14
	338	12
	344	3
	347	2
	349	2
	362	2
	362	5
	368	2
	368	5
	371	2
	371	5
	372	2
	372	5
	387	2
	387	5
	391	2
	391	5
	419	2
	419	5
	426	17
	434	5
	479	4
	480	4
	481	4
	482	4
	483	4
	484	23
	484	24
	502	7
	502	10
01643-31845	117	4
	444	27
	450	12
	457	27
	460	16
	697	28
01643-32060	158	2
	267	15
	321	3
	333	3
	339	2
	479	6
	480	6
	481	6
	482	6
	483	6
	617	3
01643-32260	298	5
	819	5
	820	5
	821	5
	822	5
	823	4
	824	13
	825	9
	826	9
	827	9
01643-32460	220	2
	220	4
	225	2
	225	4
	322	7
	334	2
01643-32780	502	18
01643-33080	322	4
	617	4
	775	2
	775	5

PartNumber	Page	Index
	776	2
	777	3
01643-50823	358	49
	381	49
	385	22
	618	11
	640	11
	642	21
	649	21
	656	11
	657	21
	660	10
	665	21
	667	10
	712	18
01643-51032	394	3
	394	18
	418	20
	421	9
	421	13
	422	39
	423	8
	424	17
	424	24
	424	29
	435	4
	441	5
	441	10
	442	5
	443	5
	446	4
	447	4
	447	8
	447	15
	455	18
	458	4
	461	5
	554	5
	589	5
	712	14
	813	6
	813	19
	813	22
	828	28
	829	38
	830	28
	831	38
	832	6
	835	35
	836	44
	837	5
	838	35
	839	44
01643-51232	90	3
	305	8
	345	5
	345	9
	401	11
	418	13
	420	5
	420	12
	420	18
	420	24
	420	28
	433	12
	520	12
	529	2
	529	4
	533	2
	533	3
	711	14
	813	10
01643-51645	396	16
	417	16
01643-70623	540	29
	542	8
	542	36
	543	9
	600	5
	600	34
	622	14
	634	14
	644	14
01643-70823	177	6
	200	6
	520	9
	523	10
	760	20
	760	24
01643-71032	175	45
	176	4
	176	6
	177	4
	178	3
	178	10
	178	31
	189	23
	198	45
	199	4
	199	6
	200	4
	201	3
	201	10
	201	31
	212	23
	215	8
	218	14
	222	10
	223	14
	227	10
	232	3
	233	3
	235	8
	235	12
	237	3
	237	6
	239	8
	239	12
	240	3
	249	38
	249	41
	491	2
	494	16
	497	8
	523	33
	526	4
	526	14
	542	18
	600	15
	701	10
	703	27
	709	27
	721	21
	723	7
	736	4
	736	6
	736	11
	736	16
	736	19
	740	3
	740	5
	740	12
	740	14
	740	21
	740	26
	740	28
	741	32
	741	36
	753	4
	753	6
	753	11
	753	16
	753	19
	755	31
	755	35
	755	39
	760	7
	760	37
	761	4
	761	14
	762	8
	762	16
	762	22
	763	6
	763	12
	763	18
	764	11
	766	32
	766	34
	766	36
	767	35
	768	37
	768	39
	769	18
	769	21
	769	24
	769	27
	770	32
	770	34
	770	36
	773	5
	773	9
	773	13
	773	15
01643-71232	174	26
	174	32
	197	26
	197	32
	393	10
	451	18
	451	21
	455	7
	456	19
	456	22
	489	8
	490	9
	490	15
	490	18
	490	21
	493	9
	493	15
	493	18
	493	21
	494	14
	497	6
	499	8
	508	6
	701	4
	721	19
	740	7
	740	16
	760	30
	766	8
	766	10
	766	23
	767	8
	767	10
	767	26
	769	4
	769	8
	769	10
	770	8
	770	10
	770	23
	771	6

PartNumber	Page	Index
	772	6
01643-71645	362	14
	368	14
	371	14
	372	14
	387	14
	391	14
02010-70638	573	7
02030-70444	544	2
02030-70719	530	3
	531	3
	532	5
	534	6
02030-70729	529	3
	529	5
	533	4
02030-70744	532	3
	534	2
02030-70764	534	3
02090-11480	822	3
	823	2
02090-11485	819	3
	820	3
	821	3
02090-11490	824	4
	824	15
	825	2
	825	11
	826	2
	826	11
	827	2
	827	11
02090-11685	815	6
	816	8
	817	6
02091-11600	818	3
02101-10651	654	7
02205-10812	131	2
02215-10710	529	6
	533	5
02290-11422	819	4
	820	4
	821	4
	822	4
	823	3
	824	14
	825	10
	826	10
	827	10
02290-11625	815	7
	816	9
	817	7
	818	5
02400-10413	91	11
02720-20204	124	4
	345	20
02753-203A7	727	1
	728	1
02754-00203	430	16
	430	30
02754-00303	716	6
02754-004A4	582	20
02756-00505	487	1
	487	2
02757-00206	437	30
02757-002A4	437	23
02760-00203	624	7
	635	8
02760-00204	627	39
	639	42
	664	53
	671	53
02760-003A3	624	8
	635	9
02762-00303	724	23
02762-006A3	723	4
02763-00204	394	20
02781-0021D	394	16
	624	15
	635	16
02781-00313	363	28
	363	31
	369	29
	369	32
02781-00315	394	11
02781-0031D	291	40
	624	21
	624	27
	635	22
	635	28
	646	1
	652	1
	661	1
	669	1
02781-00422	697	12
	726	2
	726	6
	727	6
	727	10
	728	6
	728	10
02781-00522	342	10
	348	10
02781-00628	394	6
	705	4
02782-10210	430	13
	430	27
	465	1
	624	18
	635	19
	638	39
	664	50
	671	50
	699	28
02782-10212	363	17
	369	18
02782-1021A	300	31
	306	2
	427	2
	427	15
02782-10311	291	37
	624	12
02782-10313	335	8
02782-10315	218	37
	223	37
	705	15
	721	5
	727	19
	728	19
02782-10317	465	10
	727	24
	728	24
02782-1031B	724	24
02782-10420	174	12
	197	12
02782-10422	106	14
	108	20
	705	19
	726	12
	727	2
	728	2
02782-10423	108	17
02782-10425	717	10
	721	2
02782-10516	181	9
	204	9
	705	23
02782-10522	174	15
	197	15
	215	9
	430	10
	485	24
	486	24
02782-1052A	428	6
02782-10628	342	4
	348	4
	436	10
02782-50210	394	22
02783-10210	342	13
	348	13
	437	38
02783-10315	342	29
	348	30
	394	10
	469	3
	469	6
	471	3
	471	6
	697	19
02783-10422	342	21
	348	21
	705	18
02783-10628	342	7
	348	7
	455	10
02893-05037	126	21
02896-11008	342	15
	342	18
	348	15
	348	18
	348	28
	363	19
	363	27
	369	20
	369	28
	394	23
	394	27
	427	3
	427	6
	427	10
	427	16
	428	13
	430	2
	430	14
	430	18
	430	28
	437	21
	437	26
	437	29
	437	33
	438	40
	438	43
	465	2
	465	6
	624	10
	624	16
	624	19
	627	32
	635	11
	635	17
	635	20
	635	35
	638	34
	639	40
	664	41
	664	47
	664	52
	671	41
	671	47
	671	52
	699	30
	699	34
	700	38
02896-11009	218	23
	218	38

PartNumber	Page	Index
	220	6
	220	10
	223	23
	223	38
	225	6
	225	10
	342	31
	348	32
	363	15
	363	30
	363	33
	369	16
	369	31
	370	34
	388	4
	394	13
	430	3
	444	5
	444	7
	444	9
	444	11
	450	2
	450	4
	457	5
	457	7
	457	9
	457	11
	460	4
	460	6
	465	7
	467	3
	469	5
	469	8
	469	21
	471	5
	471	8
	471	21
	575	6
	624	13
	624	22
	624	25
	624	28
	626	5
	635	14
	635	23
	635	26
	635	29
	635	32
	635	38
	637	5
	646	3
	652	3
	661	3
	663	28
	664	34
	664	38
	664	44
	669	3
	670	28
	671	34
	671	38
	671	44
	696	5
	696	8
	696	11
	697	6
	697	21
	697	27
	697	32
	697	34
	705	17
	727	25
	728	25
02896-11012	106	16
	108	19
	174	14
	180	8
	197	14
	203	8
	218	21
	220	5
	220	8
	223	21
	225	5
	225	8
	342	22
	348	22
	394	26
	395	2
	428	30
	439	21
	440	19
	582	9
	696	9
	696	20
	697	3
	697	14
	697	16
	699	26
	703	10
	703	21
	703	33
	704	41
	705	21
	709	10
	709	21
	709	33
	710	41
	726	4
	726	8
	726	14
	727	4
	727	8
	727	12
	728	4
	728	8
	728	12
02896-11015	174	8
	174	17
	180	7
	181	2
	181	10
	181	18
	197	8
	197	17
	203	7
	204	2
	204	10
	204	18
	215	10
	342	12
	348	12
	428	4
	428	7
	428	18
	428	29
	430	11
	439	11
	440	9
	463	3
	485	2
	485	26
	486	2
	486	26
	487	3
	575	5
	699	14
	699	17
	705	25
	885	
02896-11018	342	6
	342	9
	342	26
	348	6
	348	9
	348	26
	394	7
	428	31
	436	12
	455	12
	705	6
02896-21009	335	9
	456	4
	713	29
	713	32
	716	14
	718	8
	718	19
	721	7
	724	18
	724	21
	724	25
02896-21012	335	12
	713	23
	713	26
	717	11
	717	16
	721	3
	722	3
	722	12
	724	10
	724	16
	724	19
02896-21015	440	26
	716	9
	716	11
02896-21018	323	2
	335	2
	713	35
	713	40
	714	45
	720	6
	723	3
02896-61008	300	33
	306	3
	882	
	883	
	884	
02896-61009	291	39
	291	42
	882	
	883	
	884	
02896-61018	424	25
04010-00519	117	2
04010-00722	174	2
	197	2
04010-00725	77	4
04020-00514	59	19
	66	19
	86	5
	270	4
	272	4
	292	22
	712	12
04020-00616	173	2
	196	2
	406	4
	408	7
	416	5
04020-00820	51	16
	86	20
	418	11
	433	13
	711	12

PartNumber	Page	Index
04020-01024	402	12
	411	12
04020-01228	84	2
	85	2
	93	2
	276	6
	318	10
	321	1
	330	10
	333	1
	417	14
	418	2
04020-01434	396	13
	397	14
04020-01842	297	31
04025-00408	86	24
04025-00512	86	27
04025-00632	773	17
04025-01065	489	3
	499	3
04050-10060	489	4
	499	4
04050-11612	643	40
	643	43
	650	40
	650	43
	658	40
	658	43
	666	40
	666	43
	737	9
	737	19
	751	9
	751	19
04050-12015	232	13
	233	13
	240	12
	542	32
	600	29
	737	31
04050-13020	737	7
	737	17
	751	7
	751	17
	752	31
04050-13022	738	33
	752	33
04052-20633	523	38
	524	41
	538	23
	540	13
04052-20833	522	29
	522	33
04052-21038	178	24
	201	24
	523	19
	523	25
04064-02012	77	12
04064-05520	270	18
	272	18
	272	27
04064-08025	269	31
	307	17
04064-08530	307	5
04065-01410	697	7
04065-03012	712	6
04065-03212	173	17
	196	17
04065-03515	404	11
	433	7
	711	8
04065-04518	173	10
	196	10
	295	29
	310	27
04065-04718	343	32
04065-04818	91	3
	413	6
04065-05220	126	6
	417	10
04065-05520	397	4
04065-06220	404	6
04065-06825	412	26
04065-07825	396	27
04071-00140	295	9
	310	8
04071-00150	295	25
	310	23
04120-21754	131	19
	872	7
04120-21757	605	20
04205-10616	523	37
	523	40
04205-10618	643	41
	650	41
	658	41
	666	41
04205-10630	643	37
	650	37
	658	37
	666	37
04205-10832	737	29
04205-11035	752	29
04205-30835	542	29
	600	26
04205-31042	523	17
	523	23
04256-41230	564	11
	564	14
04260-00635	269	13
04260-00793	51	6
04260-01270	283	7
	402	6
	411	19
04418-02550	54	23
	148	1
	149	1
	150	1
	151	1
	152	1
	153	1
	154	1
	155	1
	156	1
04418-13060	292	27
	314	26
	326	
	842	27
	845	26
	847	26
	849	27
	850	21
	853	21
	855	21
	858	27
	861	27
	863	21
04434-50508	523	2
04434-50510	175	40
	198	40
	582	14
04434-50610	177	9
	178	5
	200	9
	201	5
	221	11
	226	11
	258	30
	259	30
	290	21
	503	9
	504	4
	506	9
	507	4
	507	8
	509	10
	620	8
	630	8
	642	5
	642	22
	649	5
	649	22
	657	5
	657	22
	665	5
	665	22
	700	50
04434-50612	654	16
	654	24
04434-50808	690	14
04434-50810	189	21
	212	21
	370	36
	585	14
	690	17
	693	9
04434-50812	520	16
04434-51008	263	5
	523	3
	523	28
	525	21
04434-51010	163	6
	258	29
	259	29
	523	31
	528	5
	552	5
	580	13
	581	37
	651	3
	668	3
	689	22
	690	28
	703	6
	709	6
04434-51012	178	4
	201	4
	243	16
	243	19
	246	1
	248	5
	251	8
	253	2
	253	7
	255	8
	256	2
	256	8
	263	12
	451	22
	456	23
	620	14
	621	2
	630	14
	633	2
	654	12
	655	7
	655	15
04434-51210	189	6
	189	17
	212	6
	212	17
	438	47
	508	14
	509	28
	510	18

PartNumber	Page	Index
	510	24
	512	12
	567	4
	604	10
04434-51212	290	29
04434-51310	76	15
	306	5
	509	17
	512	8
	512	35
04434-51312	343	26
	510	15
04434-51410	263	18
	345	17
	528	8
	552	4
	578	17
	689	20
	690	26
04434-51412	235	4
	235	15
	239	4
	239	15
	243	10
	243	13
	243	22
	246	6
	253	11
	256	12
04434-51508	126	34
04434-51510	221	3
	226	3
	430	7
	450	14
	453	6
	469	9
	471	9
	578	18
	627	28
	638	30
	646	20
	652	19
	661	21
	669	20
	702	15
	702	18
	705	27
	707	15
	707	18
	718	9
	718	17
04434-51512	291	43
04434-51610	221	4
	226	4
	290	16
	300	14
	304	7
	394	30
	460	1
	468	13
	585	11
	718	4
	718	5
	718	6
	718	16
04434-51612	247	39
	248	1
	331	21
	718	26
	718	27
04434-51710	221	12
	226	12
	244	15
	245	15
	426	11
	437	12
	438	53
	509	24
	510	4
	552	3
	552	17
	580	28
04434-51712	244	8
	245	8
	246	9
	248	8
	251	7
	255	7
	620	6
	626	23
	630	6
	637	23
	642	3
	647	33
	649	3
	652	31
	654	22
	657	3
	665	3
04434-51810	702	11
	706	2
	707	11
04434-51910	183	8
	206	8
	220	11
	222	1
	225	11
	227	1
	306	12
	439	15
	440	13
	512	28
	607	15
	707	6
	724	2
04434-51912	243	1
	243	5
	246	12
	439	16
	440	14
04434-52110	180	21
	203	21
	292	6
	304	3
	430	5
	453	2
	454	16
	512	29
	696	14
	702	6
	703	11
	703	22
	704	42
	709	11
	709	22
	710	42
	722	13
	724	11
	724	28
04434-52112	246	31
	246	35
	627	24
	638	26
	646	29
	652	27
	662	30
	669	28
	702	19
	707	19
04434-52210	215	2
04434-52310	162	1
	428	23
	552	2
	578	22
	606	4
04434-52312	181	14
	187	15
	189	18
	204	14
	210	15
	212	18
	222	4
	227	4
	236	6
	241	7
	246	15
	250	4
	469	12
	471	12
04434-52510	160	12
	165	12
04434-52511	162	2
	512	31
	705	7
04434-52512	246	18
	510	11
04434-52711	159	3
	159	12
	164	3
	164	12
	220	12
	225	12
	428	36
	452	11
	454	2
	454	4
	578	11
	580	16
	702	7
	706	5
	707	7
	720	2
	724	5
04434-52712	246	21
	251	2
	255	2
	439	19
	440	17
	606	5
04434-53211	215	3
	218	16
	223	16
	512	18
	724	36
04434-53212	248	19
	253	12
	256	13
	257	12
	470	2
	472	2
	607	4
04434-53411	428	19
	578	23
	608	10
	608	12
	609	4
	723	8
04434-53412	246	24
	248	33
04435-50610	503	3
	506	3
	509	4
04435-50810	690	18
04435-51610	444	1
	450	5

PartNumber	Page	Index
	457	1
	460	2
04435-52210	585	7
04530-11222	396	6
06030-06004	126	3
06030-06304	126	4
06124-02520	564	24
07000-02021	87	14
	88	14
07000-03030	87	13
	88	13
07000-11005	312	22
	314	22
	325	21
	336	21
07000-11007	350	22
	373	22
07000-11008	358	26
	359	7
	359	32
	365	14
	367	23
	380	26
	382	7
	382	32
	389	14
	390	23
07000-11009	353	15
	358	27
	376	15
	380	27
	385	17
07000-11010	359	29
	360	40
	367	31
	382	29
	383	40
	390	31
07000-12010	343	4
	367	11
	390	11
07000-12011	413	14
	626	19
	635	33
	635	36
	636	39
	637	19
	664	37
	664	43
	671	37
	671	43
	715	1
07000-12012	301	4
	359	31
	382	31
07000-12014	108	11
	351	32
	352	2
	374	32
	375	2
	700	37
	700	40
07000-12015	624	4
	635	4
	646	14
	652	14
	661	13
	669	13
07000-12016	351	30
	352	4
	373	30
	375	4
	626	20
	637	20
07000-12018	312	23

PartNumber	Page	Index
	314	23
	326	22
	337	22
	359	15
	359	30
	365	22
	382	15
	382	30
	389	22
	624	2
	635	2
	646	13
	652	13
	661	12
	669	12
	699	25
	700	42
	715	2
07000-12021	358	28
	359	21
	365	28
	380	28
	382	21
	385	16
	389	28
07000-12022	654	8
07000-12035	359	25
	382	25
07000-12060	419	14
	420	9
	443	11
07000-12070	345	2
	619	3
07000-12075	345	7
	420	26
07000-12085	221	10
	226	10
	420	2
	485	16
	486	16
	885	
07000-12090	485	15
	486	15
	885	
07000-12100	695	8
	708	8
07000-12110	419	9
	419	17
07000-12130	419	6
07000-13022	170	7
	193	7
07000-13024	353	13
	357	16
	376	13
	380	16
	385	25
07000-13025	452	8
07000-13032	347	5
	349	5
	421	29
	435	2
	441	2
	443	2
	455	19
	813	16
	832	3
	837	6
07000-13035	169	44
	181	6
	181	8
	192	44
	204	6
	204	8
	359	4
	359	20

PartNumber	Page	Index
	365	27
	382	4
	382	20
	389	27
	394	4
	394	14
	421	8
	421	12
	423	6
	446	5
	447	2
	447	6
	447	13
	458	5
	461	3
	828	36
	830	36
	835	36
	838	36
	885	
07000-13038	441	7
	442	2
	443	7
	837	10
07000-13040	406	1
	416	1
07000-13045	345	11
07000-13048	420	16
	451	9
	456	10
07000-15060	316	12
	328	12
07000-15090	695	6
	708	6
07000-15130	828	12
	830	12
	885	
07000-15150	835	15
	885	
07000-15160	343	11
	419	3
	872	9
07000-15170	838	15
	885	
07000-15195	343	6
	872	10
07000-15200	218	3
	223	3
07000-15240	316	13
	328	13
07000-23035	421	6
07000-63042	102	8
07000-71007	281	31
	289	24
	308	6
	883	
	884	
07000-72012	63	2
	70	2
	283	15
	284	1
	298	11
	882	
	883	
	884	
07000-72015	63	3
	70	3
	277	44
	281	30
	284	2
	289	23
	289	26
	293	36
	308	5
	308	8

PartNumber	Page	Index
	882	
	883	
	884	
07000-72022	86	18
07000-72055	305	6
07000-72065	276	32
	882	
	883	
	884	
07000-72085	63	1
	70	1
07000-72115	126	18
07000-73022	276	10
	283	4
	284	3
	289	27
	308	9
	882	
	883	
	884	
07000-73025	98	15
	292	3
	882	
	883	
	884	
07000-73028	276	9
	290	8
	292	23
	882	
	883	
	884	
07000-73030	278	24
	293	35
	882	
	883	
	884	
	885	
07000-73035	290	4
	292	10
	882	
	883	
	884	
07000-73045	76	24
07000-73048	276	22
	882	
	883	
	884	
07000-75065	298	3
	882	
	883	
	884	
07000-75085	290	2
	872	11
	882	
	883	
	884	
07000-75130	276	29
	277	37
	882	
	883	
	884	
07000-75150	277	40
	298	16
	882	
	883	
	884	
07000-75270	298	29
	882	
	883	
	884	
07000-75295	296	16
	882	
	883	
	884	
07000-75305	296	18

PartNumber	Page	Index
	882	
	883	
	884	
07000-75475	276	8
	882	
	883	
	884	
07000-A2014	713	27
07000-A2016	60	40
	67	40
	293	
07000-A2018	713	24
	714	41
07000-A2021	64	6
	64	19
	71	6
	71	19
07000-A2035	59	31
	66	31
07000-A2060	283	
	424	8
07000-A2100	424	2
07000-A3024	713	36
07000-A3025	424	19
	424	22
07000-A3029	64	20
	71	20
07000-A3030	436	2
07000-A3032	302	4
	424	12
	424	14
	424	33
07000-A5270	297	30
	882	
	883	
	884	
07000-A6220	296	26
	882	
	883	
	884	
07000-A6275	296	28
	882	
	883	
	884	
07000-B1006	402	20
07000-B1008	401	8
07000-B1009	400	10
	411	10
	416	3
	416	14
07000-B1010	405	6
	407	6
07000-B2012	59	36
	66	36
07000-B2014	416	2
07000-B2060	411	24
07000-B2130	402	21
07000-B3040	408	6
07000-B5090	828	20
	830	20
	885	
07000-B5100	835	26
	885	
07000-B5110	838	27
	885	
07000-E2012	65	5
	72	5
	171	15
	194	15
07000-E2020	171	13
	194	13
07000-E2025	59	23
	66	23
	171	14
	194	14

PartNumber	Page	Index
07000-E2055	59	25
	66	25
07000-E2110	173	1
	196	1
07000-E3024	118	12
07000-E3032	418	21
07000-E5185	396	12
07000-F1008	171	27
	194	27
07000-F1009	397	15
07000-F2012	396	14
	398	20
07000-F2014	396	17
07000-F2016	171	37
	194	37
	409	3
07000-F2050	398	21
	399	6
07000-F3038	398	16
	399	2
07001-01007	351	23
	373	23
07001-01008	401	9
07001-01009	353	14
	376	14
	400	11
07001-01010	360	41
	367	32
	383	41
	390	32
07001-02012	60	37
	66	37
07001-02014	351	33
	374	33
07001-02016	172	38
	195	38
	351	31
	373	31
07001-02018	359	16
	365	23
	382	16
	389	23
07001-05090	828	21
	830	21
	885	
07001-05100	835	27
	885	
07001-05110	838	26
	885	
07001-06225	296	27
	882	
	883	
	884	
07001-06280	297	29
	882	
	883	
	884	
07002-10823	357	5
	380	5
	385	4
07002-11023	174	11
	187	5
	197	11
	210	5
	350	5
	359	19
	363	16
	365	26
	367	20
	369	17
	373	5
	382	19
	388	5
	389	26
	390	20

PartNumber	Page	Index
	394	29
	411	6
	416	17
	437	7
	446	7
	458	7
	485	23
	486	23
	697	18
	699	11
	699	19
	885	
07002-11223	414	28
07002-11423	342	14
	342	17
	342	28
	348	14
	348	17
	348	29
	350	21
	351	25
	354	20
	355	39
	363	2
	363	5
	363	13
	363	18
	363	21
	363	25
	365	11
	365	34
	369	2
	369	5
	369	14
	369	19
	369	22
	369	26
	373	21
	373	25
	377	20
	378	39
	388	2
	389	11
	389	34
	394	19
	394	21
	411	8
	426	7
	427	1
	427	4
	427	8
	427	14
	430	4
	430	15
	430	19
	430	29
	437	25
	437	32
	438	39
	465	3
	465	5
	582	11
	582	18
	624	11
	624	14
	624	17
	624	20
	624	23
	624	26
	624	29
	627	38
	635	12
	635	15
	635	18
	635	21
	635	24
	635	27
	635	30
	639	41
	646	2
	652	2
	661	2
	664	35
	664	40
	664	51
	669	2
	671	35
	671	40
	671	51
	699	29
	700	45
07002-11623	367	4
	390	4
	437	6
	582	8
	582	13
07002-11823	174	13
	197	13
	318	14
	330	14
	350	15
	350	19
	363	29
	363	32
	369	30
	370	33
	373	15
	373	19
	447	10
07002-12034	106	15
	108	18
	108	21
	181	11
	204	11
	218	39
	223	39
	318	8
	330	8
	342	23
	342	30
	348	23
	348	31
	367	12
	390	12
	394	12
	394	24
	428	17
	437	20
	437	28
	465	11
	469	4
	469	7
	471	4
	471	7
	696	7
	697	5
	697	13
	697	20
	697	31
	699	
	699	33
	705	16
	705	20
	705	24
	726	3
	726	7
	726	13
	727	3
	727	7
	727	11
	727	20
	727	26
	728	3
	728	7
	728	11
	728	20
	728	26
07002-12434	172	39
	174	9
	174	16
	195	39
	197	9
	197	16
	215	11
	219	41
	224	41
	342	5
	342	8
	342	11
	342	20
	342	25
	348	5
	348	8
	348	11
	348	20
	348	25
	351	29
	352	6
	352	10
	353	11
	356	4
	373	29
	375	6
	375	10
	376	11
	379	4
	394	5
	426	5
	428	1
	428	8
	430	12
	436	11
	452	5
	455	11
	485	25
	486	25
	654	4
	705	5
	885	
07002-13034	436	13
07002-13334	353	3
	353	5
	376	3
	376	5
	436	14
	451	3
07002-13634	312	25
	318	2
	319	16
	326	24
	330	2
	331	16
	355	35
	355	36
	358	42
	358	46
	359	12
	365	19
	378	35
	378	36
	381	42
	381	46
	382	12
	385	21
	389	19

PartNumber	Page	Index
07002-15234	342	3
	348	3
07002-21023	171	3
	171	30
	194	3
	194	30
	396	4
	396	20
	405	19
	407	19
	713	37
	714	42
07002-21623	405	5
	405	11
	407	5
	407	11
07002-21823	171	8
	194	8
	335	10
	724	22
	724	26
07002-22034	721	6
07002-22434	62	17
	69	17
	86	14
	396	8
	717	12
	717	17
	721	4
07002-23034	86	13
07002-23334	187	6
	210	6
	456	3
07002-23634	76	7
	323	4
	335	4
07002-25234	717	7
07002-61023	276	3
	276	16
	277	43
	278	3
	279	5
	279	31
	281	26
	283	14
	286	29
	287	26
	289	22
	292	14
	293	38
	300	30
	367	14
	390	14
	882	
	883	
	884	
	885	
07002-61223	279	3
	285	3
	298	10
	410	3
	882	
	883	
	884	
	885	
07002-61423	276	17
	291	38
	291	41
	300	10
	300	32
	306	4
	318	4
	330	4
	401	10
	403	27
	416	12
	424	35
	425	38
	882	
	883	
	884	
07002-61623	276	18
	296	22
	882	
	883	
	884	
07002-61823	59	21
	66	21
	283	3
	364	
	370	
	421	
	883	
	885	
07002-62034	60	38
	67	38
	276	19
	283	10
	882	
	883	
	884	
	885	
07002-62434	291	36
	400	13
	409	4
	882	
	883	
	884	
07002-63034	278	5
	278	14
	278	23
	883	
	885	
07005-00812	99	3
	100	3
	106	10
07005-01012	118	10
	119	12
	121	3
	126	39
	290	20
	345	24
	882	
	883	
	884	
07005-01212	64	25
	71	25
	106	8
	290	27
	882	
	883	
	884	
07005-01412	65	18
	65	27
	72	18
	72	27
	87	8
	88	8
	99	10
	100	10
	108	16
	116	26
	121	5
	128	7
07005-01612	76	22
	290	28
	882	
	883	
	884	
07005-02216	82	13
07011-00080	484	8
07012-50105	298	12
	882	
	883	
	884	
07020-00000	485	8
	486	8
	504	1
	505	2
	505	3
	808	10
	808	14
	809	14
	811	13
	812	10
	812	14
	814	10
	814	14
	834	2
	835	7
	838	7
	872	2
07020-00001	522	8
	571	5
07020-00675	267	11
	872	3
07020-00900	505	5
	833	2
	833	9
	834	9
	872	4
07030-00252	292	18
07030-01030	319	18
	337	23
07040-02412	292	21
07040-11007	171	2
	171	29
	194	2
	194	29
	405	18
	407	18
	437	8
	713	38
	714	43
07040-11209	106	7
	298	9
07040-11409	318	3
	330	3
	342	27
	403	26
	411	7
	424	37
	426	6
	582	17
	627	37
07040-11612	296	21
	582	12
07040-11812	283	2
	318	13
	330	13
07040-12012	318	7
	330	7
07040-12412	218	40
	223	40
	426	4
	452	4
07040-12414	86	11
07040-13016	86	12
07040-13316	451	2
07041-13612	319	15
	331	15
07042-70108	87	3
	88	3
	505	1
	505	4

PartNumber	Page	Index
07042-70312	87	6
	88	6
07042-A0108	50	16
	64	12
	71	12
07042-A0415	57	1
	127	41
07043-30108	78	2
07043-70108	51	7
	80	3
	86	8
	99	4
	100	4
	314	24
	654	5
07043-70211	80	4
	82	2
	86	9
	295	3
07043-70415	522	9
07043-70617	86	10
07043-71222	713	21
07043-A0108	488	3
07043-A0415	87	20
	88	20
07044-12412	396	7
07044-13620	318	1
	330	1
07046-22010	87	2
	88	2
07046-41610	126	16
07046-42816	87	25
	88	25
07046-43016	86	15
07046-43516	86	19
07046-44016	86	16
07049-00608	773	20
07049-00811	299	32
07049-01012	299	31
	315	10
	327	10
	562	32
07049-01215	299	30
07049-01620	419	11
07049-02430	339	7
07049-03038	339	8
07056-10045	343	31
07085-01014	832	1
	832	2
07094-30518	98	21
07095-00314	437	35
	453	13
	453	18
07095-00524	430	23
	439	3
	439	12
	440	3
	440	10
	718	33
07095-00630	222	6
	227	6
	246	28
07095-01033	303	8
	303	17
07095-01035	303	2
	303	7
	303	19
	421	31
07095-01245	451	13
	456	14
07095-20211	221	13
	226	13
	244	11
	244	16
	245	11
	245	16
	247	40
	248	2
	248	9
	290	17
	300	15
	331	22
	426	12
	437	13
	438	54
	509	25
	509	29
	510	5
	620	7
	626	24
	630	7
	637	24
	642	4
	647	34
	649	4
	652	32
	654	23
	657	4
	665	4
07095-20213	126	30
	306	13
07095-20314	304	4
	430	6
	453	3
	469	13
	471	13
	627	25
	638	27
	647	30
	652	28
	662	31
	669	29
	702	20
	703	12
	703	23
	704	43
	707	20
	709	12
	709	23
	710	43
	724	29
07095-20318	160	13
	165	13
	220	13
	225	13
	246	32
	246	36
	510	12
	512	15
	512	32
07095-20418	159	4
	159	13
	164	4
	164	13
	706	6
07095-20419	439	20
	440	18
	707	8
07095-20420	454	3
	454	5
	702	8
	724	6
07095-20522	428	20
	512	19
	724	37
07095-20523	248	20
	253	13
	256	14
	257	13
	294	7
	309	7
	470	3
	472	3
07095-20625	215	4
	512	13
07095-20627	248	34
	723	9
07125-01014	813	15
07146-02086	485	17
	486	17
	885	
07156-00912	485	20
	486	20
	885	
07179-12062	485	11
	486	11
07179-13109	828	7
	830	7
07179-13114	835	10
07179-13126	838	10
07206-30710	119	11
	126	38
	290	19
	345	25
07206-30812	64	26
	71	26
	290	25
07206-31014	65	19
	72	19
	99	9
	100	9
	116	25
	121	4
07206-31216	290	26
07217-71013	218	7
	223	7
07260-04136	305	10
07260-05825	424	5
07260-05828	420	13
07260-20960	56	22
07261-22010	218	15
	223	15
07270-40817	343	25
07281-00197	56	23
07281-00359	64	14
	71	14
	76	6
07281-00489	610	14
	610	16
07281-00609	92	10
07283-31537	703	15
	703	28
	709	15
	709	28
07283-32236	180	15
	203	15
	722	5
	722	21
	724	32
	724	38
07283-32244	463	11
	464	5
	699	20
07283-32738	323	6
	714	46
	722	16
	722	25
	723	12
	723	16
07283-33442	244	3
	245	3
07283-33450	421	16
	423	2
	427	18
	435	8

PartNumber	Page	Index
	435	17
	439	23
	440	21
	443	14
	446	11
	446	27
	447	16
	447	18
	447	27
	458	11
	458	27
	462	8
	464	1
	464	9
	697	22
	813	11
	828	29
	830	29
	835	32
	838	32
07283-34346	92	13
07283-36155	606	12
07283-37663	50	33
07283-51523	703	16
	703	29
	709	16
	709	29
07283-52232	180	16
	203	16
	463	12
	464	6
	699	21
	722	6
	722	22
	724	33
	724	39
07283-52737	323	7
	714	47
	722	17
	722	26
	723	13
	723	17
07283-53444	244	2
	245	2
	421	17
	423	3
	427	19
	435	9
	435	18
	439	24
	440	22
	443	15
	446	12
	446	30
	447	17
	447	19
	447	28
	458	12
	458	30
	462	9
	464	2
	464	10
	697	23
	813	12
	828	30
	830	30
	835	33
	838	33
07285-00115	189	19
	212	19
07285-00125	106	22
	345	22
07285-00130	221	2
	226	2
07285-00220	74	4
07286-00875	144	2
07286-00895	106	21
07286-01020	126	28
07287-01913	74	3
07289-00035	218	19
	223	19
07289-00045	420	20
	435	13
07289-00055	305	11
07289-00070	168	8
	186	5
	187	9
	187	11
	191	8
	209	5
	210	9
	210	11
	214	8
07289-00080	187	12
	210	12
	420	14
	424	6
07289-00095	420	7
07289-00130	161	4
07289-00145	161	5
07289-00160	758	2
07299-00080	186	3
	209	3
07371-30640	424	21
07371-31049	422	37
	424	15
	424	27
	441	3
	443	3
	455	16
	813	4
	813	17
	813	20
	828	35
	830	35
	832	4
	836	42
	837	3
	839	42
07371-31255	441	8
	442	3
07371-51260	836	40
	837	7
	839	40
07372-21035	422	38
	424	23
	424	28
	441	4
	441	9
	442	4
	443	4
	455	17
	813	5
	813	18
	813	21
	828	27
	830	27
	832	5
	836	43
	837	4
	839	43
07372-21040	394	2
	446	3
	447	3
	447	7
	447	14
	458	3
	461	4
07372-21045	435	3
07372-21060	394	17
	421	14
	829	37
	831	37
	835	34
	838	34
07372-21245	305	7
	420	17
07372-21250	424	10
07378-11000	813	3
07430-71380	354	10
	357	22
	365	8
	377	10
	380	22
	385	9
	389	8
07950-10450	873	8
	874	8
	875	8
	877	8
	878	8
	880	8
07950-90403	873	10
	874	10
	875	10
	877	10
	878	10
	880	10
07951-41017	873	9
	874	9
	875	9
	877	9
	878	9
	880	9
07952-70004	873	
	874	
	875	
	877	
	878	
	880	
08000-00000	230	
08000-00001	230	
08000-32220	230	1
08017-C0701	523	14
	523	35
08017-C0703	523	36
08017-C1001	528	11
08028-12025	576	27
08028-EE035	241	2
08028-EE040	257	4
08028-EE045	241	1
08028-EE055	236	1
08028-HE060	253	5
	256	6
08034-00310	641	6
08034-20310	641	7
08034-20414	512	16
08034-20519	251	13
	508	7
	512	14
	552	24
	689	8
	690	20
	773	19
08034-20536	512	17
	512	36
	628	42
	639	45
	655	17
	655	21
08034-20823	303	18
	303	20
	439	13
	440	11
	552	25

PartNumber	Page	Index
08034-40521	253	16
	263	15
	263	17
	347	3
	349	3
	520	19
	544	21
	552	26
	552	32
	558	4
	578	30
	593	4
	621	7
	621	12
	633	7
	633	12
	651	4
	654	11
	655	18
	668	4
	689	7
	690	2
	690	19
	773	18
08037-01008	178	23
	201	23
	539	37
	552	15
	584	4
08037-01610	525	22
	690	12
08037-02512	490	10
	493	10
	689	11
	690	5
	766	15
	767	15
	770	15
08037-03614	235	9
	239	9
	258	3
	258	14
	259	3
	259	14
08037-10610	689	3
08037-12036	558	5
	593	5
08038-00035	253	3
	256	3
	257	8
08041-00500	576	13
	576	17
08041-03000	576	12
08044-00010	578	
08053-00910	552	20
08053-01510	254	8
	263	21
08055-00070	254	7
08055-00282	254	6
08055-10681	568	29
08055-11481	568	30
08056-00111	553	35
08056-00130	553	36
08059-00310	552	13
	552	23
	576	26
	578	29
08059-00515	689	9
	690	3
08086-20100	629	1
08088-30000	251	17
	255	16
08105-12420	258	24
	259	24
08164-B1000	177	1
	200	1
08191-00770	254	5
	364	36
	517	18
	571	8
08192-12100	517	17
08193-20010	88	31
	135	4
	138	4
	140	43
	163	3
	729	4
	730	4
	810	7
08193-21012	160	4
	165	4
	248	10
	249	39
	249	42
	300	11
	401	13
	451	25
	456	26
	520	22
	571	6
08210-01805	524	42
08210-02911	646	10
	652	10
08672-01000	345	15
09000-30006	873	1
	874	1
	875	1
	877	1
	878	1
	880	1
09001-03600	873	5
	874	5
	875	5
	877	5
	878	5
	880	5
09019-28035	873	6
	874	6
	875	6
	877	6
	878	6
	880	6
09021-01928	873	2
	874	2
	875	2
	877	2
	878	2
	880	2
09023-00300	873	4
	874	4
	875	4
	877	4
	878	4
	880	4
09033-00190	873	3
	874	3
	875	3
	877	3
	878	3
	880	3
09039-00150	874	14
	875	14
	878	14
	880	14
09054-00009	874	13
	875	13
	878	13
	880	13
09056-05620	873	11
	874	11
	875	11
	877	11
	878	11
	880	11
09161-21000	863	24
09161-23000	850	24
	853	24
	855	24
09161-C0641	842	5
	845	5
	847	5
	849	5
	858	5
09162-21000	863	25
09162-23000	850	25
	853	25
	855	25
09162-C0641	842	4
	845	4
	847	4
	849	4
	858	4
09218-12219	824	5
	824	16
	825	3
	825	12
	826	3
	826	12
	827	3
	827	12
09244-02516	824	2
	824	9
09245-04875	775	
	776	
	777	
09245-50060	775	
	776	
	777	
09280-10040	783	
	784	
	785	
	786	
	787	
	788	
	789	
	791	
	792	
	793	
	794	
	795	
	798	
	799	
	800	
	802	
	803	
	804	
	805	
	806	
09280-10130	783	3
	784	3
	785	3
	786	3
	787	3
	788	3
	789	3
	791	3
	792	3
	793	3
	794	3
	795	3
	796	4
	797	4
	798	3
	799	3
	800	3

PartNumber	Page	Index
	801	3
	802	3
	803	2
	804	3
	805	2
	806	3
09281-00041	783	4
	784	4
	785	4
	786	4
	787	4
	788	4
	789	4
	791	4
	792	4
	793	4
	794	4
	795	4
	796	5
	797	5
	798	4
	799	4
	800	4
	801	4
	802	4
	803	3
	804	4
	805	3
	806	4
09282-00017	783	7
	784	7
	785	7
	786	7
	787	7
	788	7
	789	7
	791	7
	792	7
	793	7
	794	7
	795	7
	798	7
	799	7
	800	7
	801	6
	802	7
	803	6
	804	7
	805	6
	806	7
09282-00020	790	3
	796	2
	797	2
09283-00000	783	5
	784	5
	785	5
	786	5
	787	5
	788	5
	789	5
	791	5
	792	5
	793	5
	794	5
	795	5
	796	6
	797	6
	798	5
	799	5
	800	5
	801	7
	802	5
	803	4
	804	5
	805	4

PartNumber	Page	Index
	806	5
09285-00000	783	6
	784	6
	785	6
	786	6
	787	6
	788	6
	789	6
	791	6
	792	6
	793	6
	794	6
	795	6
	796	7
	797	7
	798	6
	799	6
	800	6
	801	5
	802	6
	803	5
	804	6
	805	5
	806	6
09289-00000	873	7
	874	7
	875	7
	877	7
	878	7
	880	7
09409-70000	532	1
	534	1
09415-00506	539	35
	550	19
	766	14
	767	14
	770	14
09415-00706	554	7
	589	7
09415-01008	235	18
	239	18
	525	23
	538	30
	539	36
	550	4
	554	1
	554	2
	589	1
	589	2
	690	7
09415-02110	178	26
	201	26
09415-03614	168	13
	191	13
	214	13
	580	34
09460-00003	238	1
09479-02400	586	3
	586	19
	608	3
	608	6
	609	2
09484-00560	609	3
09602-00003	845	25
	847	25
	858	26
	861	26
09602-10001	842	26
	850	20
	853	20
	863	20
09602-14000	849	26
09602-15000	855	20
09608-05080	292	26
09620-A2000	867	1

PartNumber	Page	Index
	868	1
	869	1
09620-A2070	868	3
09620-A3000	869	2
09642-11000	863	32
09642-13000	843	32
	849	32
	851	32
	854	33
	856	33
09642-A0480	845	34
	848	34
	859	37
	862	37
09651-01001	864	10
09651-03001	852	10
	857	10
09651-A0481	844	8
	846	8
	860	9
09653-01001	863	26
09653-03001	850	26
	853	26
	855	26
09653-A0641	842	1
	842	2
	845	1
	845	2
	847	1
	847	2
	849	1
	849	2
	858	1
	858	2
09654-01001	864	11
09654-03001	852	11
	857	11
09654-C0481	844	9
	846	9
	860	10
09659-51000	863	17
	863	18
	863	19
09659-53000	850	17
	850	18
	850	19
	853	17
	853	18
	853	19
	855	17
	855	18
	855	19
09659-A057B	842	23
	842	24
	842	25
	845	22
	845	23
	845	24
	847	22
	847	23
	847	24
	849	23
	849	24
	849	25
	858	23
	858	24
	858	25
	861	23
	861	24
	861	25
09659-A0641	549	4
	846	15
	846	16
	860	15
	860	16

PartNumber	Page	Index
09664-30011	853	29
	855	29
09664-62A11	845	30
	858	31
09664-62D11	847	30
	861	31
09667-01001	863	22
	863	23
09667-03001	850	22
	850	23
	853	22
	853	23
	855	22
	855	23
09667-A0481	842	28
	845	27
	847	27
	849	28
	858	28
	861	28
09667-A0880	842	6
	845	6
	847	6
	849	6
	858	6
09668-01001	863	27
09668-03001	850	27
	853	27
	855	27
09669-0000E	842	22
	845	21
	847	21
	849	22
	850	16
	853	16
	855	16
	858	22
	861	22
	863	16
09690-P0900	842	18
	845	17
	847	17
	849	18
	850	12
	853	12
	855	12
	858	18
	861	18
	863	12
09696-40107	845	28
	847	28
	858	29
	861	29
09696-50072	845	29
	847	29
	858	30
	861	30
09698-00001	866	1
09801-11001	864	12
09801-13001	852	12
	857	12
09801-C0481	844	10
	846	10
	860	11
09802-31000	864	8
09802-33000	844	11
	852	8
	857	8
09802-D0880	846	11
09805-01000	863	7
09805-03000	850	7
	853	7
	855	7
09805-C0881	842	13
	845	12
	847	12
	849	13
	858	13
	861	13
09806-C0883	842	19
	845	18
	847	18
	849	19
	858	19
	861	19
09807-C0883	842	20
	845	19
	847	19
	849	20
	850	14
	853	14
	855	14
	858	20
	861	20
	863	14
09808-01000	863	28
09808-03000	850	28
	853	28
	855	28
09808-A1201	842	3
	845	3
	847	3
	849	3
	858	3
09812-11000	863	13
09812-13000	850	13
	853	13
	855	13
09817-K088B	148	3
	149	3
	150	3
	151	3
	152	3
	153	3
	154	3
	155	3
	156	3
09845-00480	865	1
09920-00150	80	5
	82	14
	116	27
09960-01601	842	21
	845	20
	847	20
	849	21
	850	15
	853	15
	855	15
	858	21
	861	21
	863	15
09963-01001	864	13
09963-03001	852	13
	857	13
09963-A1640	844	13
	846	13
	860	13
09980-10550	878	15
	879	1
	880	15
09982-10057	878	16
	879	2
	880	16
103-21-21260	607	20
103-54-21160	344	5
104-15-25480	278	18
104-15-25490	278	16
104-890-5610	531	4
	532	2
	534	7
10S-914-4290	415	33
112-961-2260	522	38
113-06-31120	234	2
113-15-12840	269	24
	882	
	883	
11T-27-11180	520	6
11Y-03-32260	168	31
	191	31
	214	31
11Y-06-11630	257	2
11Y-09-11120	343	24
11Y-09-11140	187	14
	190	6
	210	14
	213	6
	292	17
11Y-62-12330	624	9
	635	10
11Y-62-12510	624	24
	635	25
11Y-62-12850	635	31
	635	37
	664	36
	664	42
	671	36
	671	42
11Y-62-36160	342	24
	348	24
120-01-31321	760	21
120-10-31120	301	3
124-A62-1920	739	6
	739	15
	744	11
125-15-15290	278	17
12H-15-14130	278	15
12H-15-14140	278	21
12R-60-11230	343	16
130-43-64260	759	7
134-03-61410	190	8
	213	8
	580	31
	581	40
	581	41
	584	3
	655	6
	655	14
134-13-31580	272	29
	274	5
134-98-71420	845	32
	847	32
135-06-34250	620	13
	630	13
135-06-34260	651	2
135-15-22730	269	22
142-06-13540	655	2
144-15-22881	269	26
	882	
	883	
144-874-7470	291	34
	294	15
	309	15
14S-62-21841	713	34
14X-06-12270	236	4
	241	5
14X-06-12280	236	13
	236	15
	241	14
	241	16
14X-06-12290	236	14
	241	15
14X-15-15850	278	4
	278	22
14X-15-16210	278	19
14X-62-33411	697	33

PartNumber	Page	Index
14X-911-1330	536	2
	598	2
14X-911-1540	540	1
14X-98-35181	842	31
	845	33
	848	33
	849	31
	850	31
	853	32
	855	32
	859	36
	862	36
	863	31
14Y-22-55510	300	7
154-03-72270	174	4
	197	4
154-61-16570	526	7
154-61-16930	522	27
	542	31
	600	28
155-61-15350	246	27
175-06-81610	552	14
	668	2
	689	6
175-15-56470	278	20
175-15-69510	296	15
175-21-12180	317	3
	324	5
	329	3
	338	5
175-54-34170	488	5
	769	14
175-61-23220	745	10
	746	44
175-79-33240	64	22
	71	22
175-79-83760	160	37
	165	37
	174	36
	189	16
	197	36
	212	16
	452	16
	468	14
	578	19
176-911-4220	608	11
178-60-12250	170	19
	193	19
17A-22-47360	295	2
	310	2
17A-57-21201	529	1
	530	1
17A-57-21221	530	2
	531	2
	532	4
	534	5
17A-61-41580	717	14
17A-61-41640	394	25
17M-04-41190	218	24
17M-61-42710	300	29
195-01-14540	178	13
	201	13
195-03-41380	170	18
	193	18
195-09-18112	775	3
	777	2
195-13-12711	269	2
	307	4
	882	
	883	
	884	
195-15-42581	296	6
195-33-11220	187	18
	210	18
	745	20
	746	26
195-43-44220	630	20
195-54-42981	732	6
	745	18
	750	6
195-60-51560	207	1
195-979-5190	586	24
198-38-12460	605	6
198-911-2550	522	31
198-Z11-2640	693	4
201-03-29160	263	30
	581	36
201-06-61370	248	25
203-54-56970	446	19
	458	19
203-54-62670	344	14
203-54-63830	492	14
	760	32
203-60-62220	366	37
	389	37
203-60-62320	363	8
	363	11
	369	7
	369	11
205-00-72430	867	2
	868	2
	869	3
205-03-71330	170	3
	193	3
205-54-51250	545	17
205-54-72220	540	2
205-54-75870	727	29
	728	29
205-60-51390	697	9
205-60-51410	697	10
205-60-51420	697	11
205-60-64290	697	8
205-60-64300	697	
205-60-71220	490	11
	492	10
	493	11
205-62-53391	503	10
	506	10
	509	14
205-62-54561	131	4
205-62-74740	424	16
206-03-43340	189	20
	212	20
206-06-61130	437	16
207-03-51230	170	1
	193	1
207-03-51240	170	4
	193	4
207-03-51380	170	2
	193	2
207-46-53140	776	3
207-54-13650	263	29
207-60-71131	343	10
207-60-71182	343	9
	872	8
207-62-33690	457	17
208-04-71780	184	1
208-06-19170	222	5
	227	5
208-53-12991	551	1
208-979-7540	558	1
	561	1
	593	1
	596	1
209-43-51640	563	9
	563	18
209-62-11810	141	21
209-62-42840	697	30
20B-27-11210	405	17
	407	17
	416	7
	428	3
	428	10
	428	35
20T-54-75290	541	37
20U-54-24850	544	11
20U-54-46520	544	20
	552	31
20U-62-41860	724	20
20U-62-41890	348	27
	427	5
20Y-00-41340	842	30
	849	30
	850	30
	853	31
	855	31
20Y-00-41530	842	29
	845	31
	847	31
	849	29
	850	29
	853	30
	855	30
	859	32
	862	32
	863	29
20Y-00-41640	859	33
	862	33
20Y-00-41710	863	30
20Y-06-23472	551	5
20Y-06-41990	547	
20Y-06-42180	548	3
20Y-06-42190	550	14
	550	15
	550	18
	629	8
20Y-43-41491	551	7
20Y-53-11810	541	39
20Y-53-12172	555	16
	590	28
20Y-54-11611	232	5
	233	5
	240	5
	760	38
20Y-54-12920	733	15
20Y-54-35480	541	40
20Y-54-35710	540	34
20Y-54-35961	541	35
20Y-54-65860	552	6
20Y-57-A1661	533	1
20Y-60-21240	343	7
20Y-60-21320	343	17
20Y-60-21340	343	21
20Y-60-22210	363	22
	369	23
20Y-60-22270	363	23
	369	24
20Y-60-31131	343	8
20Y-60-32110	626	
	637	
20Y-60-32121	626	11
	637	11
20Y-62-15960	627	1
	638	1
	648	8
	663	8
	670	8
20Y-62-18890	624	3
	635	3
	646	12
	652	12
	661	11
	669	11
20Y-62-18910	624	1
	635	1

PartNumber	Page	Index
	646	11
	652	11
	661	10
	669	10
20Y-62-23541	363	20
	369	21
20Y-62-41701	363	
	369	
20Y-62-41971	437	24
20Y-62-45710	465	4
20Y-62-47630	363	26
	369	27
21J-06-13661	251	
	255	
	294	2
	309	2
21J-978-2480	605	18
21K-03-11190	444	17
	627	21
	638	23
	646	17
	652	16
	661	16
	669	15
21U-62-34710	444	
	453	
	457	
	624	
	636	
	646	
	652	
	661	
	669	
21U-62-34720	450	
	624	
	625	
	635	
	636	
	646	
	652	
	661	
	663	
	664	
	669	
	670	
	671	
21U-62-34730	444	
	457	
	460	
	624	
	636	
	646	
	652	
	661	
	664	
	669	
	670	
21U-62-34750	444	
	453	
	457	
	460	
	624	
	636	
	646	
	652	
	661	
	664	
	669	
	671	
21U-62-34760	625	
	636	
	646	
	652	
	661	
	663	
	664	
	669	
	670	
	671	
21U-62-34770	444	
	453	
	457	
	460	
	624	
	636	
	646	
	652	
	661	
	663	
	664	
	669	
	670	
21W-46-47121	178	29
	201	29
21W-62-42630	664	33
	671	33
21W-62-42640	187	2
	210	2
21W-62-42820	342	19
	348	19
21W-62-43990	635	34
	664	39
	671	39
21W-62-45140	635	13
22B-06-11690	179	1
	202	1
22B-06-11990	179	3
	202	3
22B-54-16340	538	20
22B-60-11160	343	14
22B-62-18940	717	15
22D-62-18450	578	12
22J-62-1A690	715	3
22L-46-12150	449	1
	459	1
	749	1
	766	24
	767	27
	770	24
22M-43-21220	618	5
	640	5
	656	5
22M-43-21230	618	7
	640	7
	656	7
22M-54-19170	490	2
	493	2
	610	9
22M-54-26180	773	3
22P-62-13510	437	34
	453	17
22P-62-13520	430	22
	439	2
	440	2
22P-62-13530	303	1
	421	30
22P-62-13540	453	12
22P-62-13550	439	4
	440	4
	718	32
22P-62-13560	303	5
22S-62-81540	699	12
22S-71-81580	716	7
22T-43-11210	523	21
22T-43-12180	523	7
22T-43-13130	630	19
22T-55-15290	523	16
	542	11
	600	8
22T-56-23290	168	28
	191	28
	214	28
22T-60-13110	715	4
22T-61-18130	306	9
22U-00-21510	844	12
	852	9
	857	9
	864	9
22U-00-21511	846	12
	860	12
22U-06-22251	693	1
22U-54-25140	573	12
22U-62-21551	451	12
	456	13
22W-06-13160	576	11
	576	16
22W-15-16241	274	4
22W-22-17460	567	3
22W-43-17330	572	18
22W-62-13420	699	13
22W-62-17190	654	6
22W-70-16120	160	29
	165	29
234-15-15120	283	8
234-15-23280	295	21
	310	19
234-885-3660	578	8
236-46-13620	809	9
	809	19
23A-06-21410	235	
	239	
23A-06-21430	235	
	239	
23A-06-21440	235	
	239	
23A-06-21510	235	
	239	
23A-06-21530	235	
	239	
23B-07-61412	510	19
23B-40-43210	294	6
	309	6
23B-53-71190	846	17
	860	17
23B-64-41240	716	10
23B-951-5360	562	6
23B-952-1980	562	5
23B-953-3460	767	19
23C-15-65300	281	
	287	
23C-15-66000	278	
23S-05-35320	576	34
23S-43-31550	642	11
	642	14
	649	11
	649	14
	657	11
	657	14
	660	4
	665	11
	665	14
	667	4
23S-43-51111	642	18
	649	18
	657	18
	660	8
	665	18
	667	8
23S-43-51230	642	10
	649	10
	657	10
	665	10
23S-43-51240	620	12
	630	12
	630	18

PartNumber	Page	Index
	642	19
	649	19
	657	19
	660	9
	665	19
	667	9
23S-54-27420	746	35
23S-54-27450	740	9
	740	18
	754	10
	754	20
23S-55-51970	525	3
	525	7
	525	15
	541	44
	544	16
	550	6
	563	3
	563	6
	563	12
	563	15
	573	17
	611	11
23S-55-55510	563	4
	563	13
	611	10
23S-60-48570	715	5
23S-61-51310	765	15
23W-13-11520	269	17
	307	10
23W-13-12680	269	9
281-01-13180	581	35
281-81-12930	608	5
283-06-16120	576	14
	576	18
283-06-16190	576	10
	576	15
287-35-11470	319	17
361-62-21111	627	15
	638	17
	646	23
	652	22
	661	24
	669	23
362-15-19520	270	3
	272	3
362-56-41740	525	13
363-04-11130	218	6
	223	6
363-15-16110	605	2
363-18-31390	455	15
363-43-37410	564	2
363-54-31450	540	33
	542	22
	554	6
	572	15
	589	6
	600	19
415-06-25120	705	10
415-46-11380	489	10
	499	10
415-54-11980	733	9
415-62-11560	469	20
	471	20
	575	2
	575	4
	654	9
415-64-13120	446	17
	446	21
	448	35
	458	17
	458	21
	462	7
	463	6
	464	18
415-64-13130	258	11
	259	11
	446	8
	446	26
	447	24
	458	8
	458	26
	463	7
	464	19
	699	8
416-03-11170	168	3
	191	3
	214	3
416-06-11310	243	8
416-06-22250	576	30
416-09-11130	485	5
	485	7
	486	5
	486	7
	885	
416-09-12220	562	26
416-09-12230	232	7
	233	7
416-54-21540	735	11
	756	11
416-54-34230	766	25
	767	28
	769	15
	770	25
416-62-13450	716	12
416-64-15480	885	K10
416-70-22190	854	34
	856	34
416-926-3494	548	1
417-03-21150	189	11
	212	11
417-04-H1150	223	25
417-06-22610	252	2
417-18-31120	700	41
417-40-22131	571	15
417-40-22171	571	16
417-40-22180	571	17
417-40-22190	571	18
417-40-22210	571	19
417-40-22220	571	20
417-40-22290	571	21
417-40-22310	571	22
417-40-22320	571	
417-40-22330	571	23
417-40-22340	571	
417-40-22350	571	
417-43-16210	754	5
	754	8
	754	15
	754	18
	754	22
	755	29
417-43-26212	568	2
417-43-26221	568	3
417-43-26230	568	4
417-43-26280	568	6
	568	10
417-43-26290	568	7
	568	11
417-43-26310	568	8
	568	12
417-43-26320	568	13
417-43-26332	568	14
417-43-26340	568	15
417-43-26350	568	16
417-43-26360	568	17
417-43-26370	568	18
417-43-26380	568	19
417-43-26410	568	21
417-43-27120	564	22
417-43-27410	564	3
417-43-27420	564	4
417-43-37541	698	2
417-43-37550	698	3
417-43-37560	698	4
417-43-37570	698	5
417-43-37580	698	6
417-43-37620	698	7
417-43-37640	698	8
417-43-37660	698	9
417-43-37670	698	10
417-43-37680	698	11
417-43-37690	698	12
417-43-37710	698	13
417-43-37720	698	14
417-43-37730	698	15
417-43-37740	698	16
417-43-37751	698	17
417-43-37760	698	18
417-43-37780	698	19
417-43-37790	698	20
417-54-12260	699	9
417-54-13470	258	9
	259	9
417-54-21390	732	15
	750	15
417-54-21460	492	11
417-54-21610	737	4
	751	4
417-54-21650	737	3
	737	13
	751	3
	751	13
417-54-21660	737	14
	751	14
417-62-13620	573	3
	732	11
	750	11
417-62-14130	573	4
	732	10
	750	10
417-62-23690	442	11
	442	16
417-923-3950	540	23
	542	12
	600	9
417-926-3141	538	1
417-926-3150	538	3
417-926-3181	538	9
417-926-3210	538	17
417-926-3250	540	3
417-926-3370	538	26
417-926-3380	540	4
417-926-3411	538	13
417-926-3421	538	14
417-926-3431	540	21
417-926-3450	552	30
417-926-3711	549	1
	601	1
417-98-11121	873	12
	874	12
	875	12
	877	12
	878	12
	880	12
418-06-31650	236	10
	241	11
418-06-42610	242	8
418-06-42620	242	9
418-09-11130	605	15
	727	28
	728	28
418-43-18240	523	26
418-43-27140	564	5
418-43-27191	564	1

PartNumber	Page	Index
418-43-37130	564	19
418-43-37140	564	18
418-43-37161	438	42
418-43-37230	582	10
418-43-37681	300	9
418-54-13151	393	5
418-54-13161	393	7
418-54-13220	393	4
418-54-22190	766	16
	767	16
	770	16
418-54-35450	745	2
418-54-43300	610	
418-62-11620	716	8
	716	15
418-62-23790	454	10
418-62-32180	638	4
	663	11
	670	11
418-62-34490	363	7
	363	10
	369	10
418-62-35111	699	24
	713	22
418-923-3932	544	1
418-925-3450	535	2
418-925-3471	612	5
	613	5
	614	5
	615	5
	616	5
418-925-3481	612	6
	613	6
	614	6
	615	6
	616	6
418-925-4220	540	8
418-925-4260	538	27
418-925-4310	540	15
418-925-4320	540	14
418-926-3490	535	4
	538	34
	692	6
	692	16
	692	27
	692	29
	692	31
418-926-3660	562	9
	610	11
418-926-4530	622	20
	634	20
418-967-2150	548	4
418-967-2230	548	5
418-S95-4450	511	3
	511	9
	511	15
	511	21
	512	3
	512	6
	513	3
	513	10
	513	12
	513	14
	513	16
	513	24
	513	28
	514	41
418-S95-4460	512	11
	513	29
	513	40
418-S95-4471	511	17
	511	23
	513	21
418-S95-4480	511	16
	511	22
	513	20
418-S95-4490	511	18
	511	24
	513	22
418-S95-4521	511	5
	511	11
	513	18
	513	26
	513	31
418-S95-4530	511	4
	511	10
	513	17
	513	25
	513	30
418-S95-4540	511	6
	511	12
	513	19
	513	27
	513	32
418-U12-3410	757	9
418-U12-3420	757	10
419-06-23420	235	10
	239	10
419-09-11150	578	7
	580	22
	638	2
	663	9
	670	9
419-09-11250	484	12
419-09-11440	492	5
419-15-12122	295	17
	310	15
	882	
	883	
	884	
419-15-12140	274	14
419-15-12271	270	27
419-15-12640	270	12
	272	12
	275	33
419-15-12650	275	34
419-15-12670	274	17
419-15-12680	274	18
419-18-31430	220	7
	225	7
419-22-12581	311	13
	313	13
	325	12
	336	12
419-22-12870	322	6
	334	1
419-22-33812	331	18
419-22-33921	319	20
419-30-11630	789	2
419-33-11460	318	5
	330	5
419-43-17760	713	11
419-43-17910	444	14
	450	7
	457	14
	460	12
	468	6
	468	10
419-43-17920	174	21
	197	21
	258	12
	259	12
	573	2
	699	6
	732	8
	750	8
419-43-17930	258	10
	259	10
	446	10
	446	25
	447	26
	458	10
	458	25
	462	5
	463	9
	464	21
	573	5
	699	7
	732	9
	750	9
419-43-37780	698	21
419-46-12480	502	3
419-60-35220	452	6
419-62-23990	444	12
	457	12
419-70-11340	484	26
419-923-2130	552	34
	553	38
419-926-4260	544	3
41G-06-13210	258	21
	259	21
41G-06-13220	258	22
	259	22
41G-06-13230	258	23
	259	23
421-01-41121	93	1
421-01-41140	158	1
	339	1
421-01-41180	300	1
421-01-41190	300	2
421-01-41210	345	14
421-01-41251	139	12
421-01-41550	158	6
	339	6
421-01-41610	161	3
421-01-42220	345	16
421-01-H2150	758	1
421-02-31114	166	1
421-02-31120	166	2
421-03-05010	214	
421-03-31181	189	1
	212	1
421-03-31260	170	15
	193	15
421-03-31271	170	14
	193	14
421-03-31281	170	16
	193	16
421-03-31590	760	12
	760	17
	766	12
	767	12
	770	12
421-03-32132	187	10
	210	10
421-03-32162	218	11
	223	11
421-03-33112	176	1
	199	1
421-03-33122	176	2
	199	2
421-03-41130	168	10
	191	10
	214	10
421-03-41150	168	4
	191	4
	214	4
421-03-41160	168	6
	191	6
	214	6
421-03-41171	186	1
	209	1
421-03-41191	186	4
	209	4
421-03-41210	168	36

PartNumber	Page	Index
	191	36
421-03-41220	168	37
	191	37
421-03-41230	170	10
	193	10
421-03-41240	174	27
	197	27
421-03-41260	169	51
	192	51
421-03-41330	190	1
	213	1
421-03-41340	189	24
	212	24
421-03-41360	169	47
	192	47
421-03-41460	168	26
	191	26
	214	26
421-03-41470	168	27
	191	27
	214	27
421-03-41490	168	9
	191	9
	214	9
421-03-41501	168	
	191	
421-03-41510	174	34
	197	34
421-03-41521	190	2
	213	2
421-03-41530	190	3
	213	3
421-03-41560	168	14
	191	14
	214	14
421-03-41610	189	2
	212	2
421-03-41650	168	5
	191	5
	214	5
421-03-41720	174	33
	197	33
421-03-41810	189	25
	212	25
421-03-41820	189	26
	212	26
421-03-41831	189	27
	212	27
421-03-41840	174	30
	197	30
421-03-42180	186	2
	209	2
421-03-42230	187	3
	210	3
421-03-42250	187	8
	210	8
421-03-44030	169	
	192	
421-03-44150	169	50
	192	50
421-03-44180	168	1
	191	1
	214	1
421-03-44190	168	2
	191	2
	214	2
421-03-44210	169	40
	192	40
421-03-44220	169	41
	192	41
421-03-44230	169	46
	192	46
421-03-44280	169	45
	192	45
421-03-44430	168	7

PartNumber	Page	Index
	191	7
	214	7
421-04-31161	218	26
	223	26
421-04-31210	218	30
	223	30
421-04-31240	218	35
	223	35
421-04-31250	218	36
	223	36
421-04-31270	218	31
	223	31
421-04-31280	218	29
	223	29
421-04-41131	218	1
421-04-41150	218	2
	223	2
421-04-41160	218	22
	223	22
421-04-41171	220	9
	225	9
421-04-41180	218	20
	223	20
421-04-41240	218	34
	223	34
421-04-41260	184	2
	207	2
421-04-41280	221	1
	226	1
421-04-H1130	223	24
421-06-11221	234	1
421-06-12780	263	11
421-06-22830	252	1
421-06-22880	252	3
421-06-23320	261	
	262	
421-06-23330	179	2
	202	2
	261	
	262	
421-06-23552	258	5
	259	5
421-06-23611	258	26
421-06-23621	259	26
421-06-23630	258	6
421-06-23640	259	6
421-06-24180	490	3
	493	3
421-06-24230	232	11
	233	11
	240	10
421-06-26110	570	
421-06-26120	570	1
421-06-26130	570	2
421-06-26140	570	3
421-06-26150	570	4
421-06-26160	570	5
421-06-26210	553	37
421-06-26220	576	32
421-06-26250	553	
421-06-26260	553	
421-06-31190	651	1
	668	1
421-06-31410	688	1
421-06-35121	703	5
	709	5
421-06-36241	629	3
421-06-41110	177	2
	200	2
421-06-41130	178	14
	201	14
421-06-41151	264	1
421-06-41240	243	4
421-06-41261	235	13
	239	13

PartNumber	Page	Index
421-06-41270	235	14
	239	14
421-06-41310	163	2
421-06-41350	160	9
	165	9
421-06-41710	250	1
421-06-41720	253	4
	256	5
421-06-41730	253	6
	256	7
421-06-41781	253	10
	256	11
421-06-41840	256	4
421-06-41890	248	13
421-06-41910	249	45
421-06-41920	248	21
421-06-42141	160	24
421-06-42172	159	1
421-06-42211	160	1
	165	1
421-06-42221	160	5
421-06-42240	160	19
	165	19
	453	21
421-06-42270	244	1
	245	1
421-06-42281	160	8
	165	8
421-06-42290	257	14
421-06-42310	248	16
421-06-42340	236	5
	241	6
421-06-42381	251	1
	255	1
421-06-42440	244	12
421-06-42450	257	1
421-06-42470	300	24
421-06-42740	643	48
	650	47
	660	13
	667	13
421-06-42750	644	16
421-06-42760	254	1
	257	19
421-06-42850	252	8
421-06-42910	251	14
	255	13
421-06-43110	258	2
421-06-43120	259	2
421-06-43141	165	24
421-06-43151	164	1
421-06-43210	178	1
	201	1
421-06-43271	165	5
421-06-44230	232	1
421-06-44240	233	1
	240	1
421-06-44250	237	1
421-06-44260	237	4
421-06-44310	437	11
421-06-44330	242	1
421-06-44510	232	6
421-06-44520	233	6
421-06-44530	240	6
421-06-44581	236	9
	241	10
421-06-45111	553	39
	578	1
421-07-11550	586	16
421-07-12512	555	17
	590	29
421-07-15110	544	22
421-07-15170	604	4
421-07-36211	604	7
421-07-41130	609	1

PartNumber	Page	Index
421-07-41140	608	1
421-07-41150	608	2
421-07-41160	608	7
421-07-41170	608	13
421-07-41230	609	7
421-07-41240	586	20
	608	18
421-09-11310	484	2
	808	5
	808	13
	811	5
	811	12
	812	5
	812	13
	814	5
	814	13
421-09-11320	808	6
	811	6
	812	6
	814	6
	828	4
	830	4
	885	
421-09-11330	808	9
	811	8
	812	9
	814	9
421-09-11350	835	4
	835	6
	838	4
	838	6
	885	
421-09-12240	322	1
421-09-12322	232	14
	233	14
	240	13
	492	3
421-09-12540	503	4
	504	7
	506	4
	507	2
	509	2
	509	8
421-09-21210	517	15
	554	3
	589	3
421-09-21260	692	13
421-09-21360	610	2
421-09-21420	345	30
	643	26
	649	26
	658	26
	665	26
	721	17
421-09-21440	573	18
421-09-21460	573	11
421-09-31140	187	7
	210	7
	302	3
421-09-31310	538	32
	545	8
	545	12
	545	16
	622	9
	634	9
	644	9
421-09-31320	562	29
421-09-42250	322	3
421-09-45111	302	1
421-09-45120	302	2
421-09-H4680	508	13
421-16-41180	187	13
	210	13
421-16-41210	292	15
421-16-45110	292	16
421-16-45160	187	1
	210	1
421-18-42140	305	5
421-18-42160	305	9
421-18-42170	305	1
421-20-12690	266	6
	267	6
	268	4
421-20-13030	267	
421-20-13540	267	7
	267	18
421-20-15123	267	8
421-20-15620	267	10
421-20-15630	267	9
421-20-32621	266	4
421-20-32712	266	
421-20-32740	266	2
421-20-32781	266	1
421-20-33020	267	
421-20-33621	267	4
	268	2
421-20-33810	267	
421-20-33820	267	1
421-20-34530	268	
421-20-34670	268	1
421-22-30033	311	
	313	
	315	
	318	
	320	
	321	
	324	
421-22-30083	311	
	313	
	315	
	317	
	318	
	320	
	321	
421-22-31045	315	
	318	
	324	
421-22-31086	315	
	317	
	318	
421-22-31120	315	5
421-22-31180	319	21
421-22-31261	316	14
	328	14
421-22-31271	316	
	328	
421-22-31281	316	
	328	
421-22-31291	316	
	328	
421-22-31361	319	22
421-22-31371	319	
421-22-31381	319	
421-22-31391	319	
421-22-31410	324	8
	338	8
421-22-31530	324	6
421-22-31540	324	7
	338	7
421-22-31600	324	
421-22-31761	315	7
	327	7
421-22-31771	315	8
	327	8
421-22-31832	317	17
	324	16
421-22-32061	311	
421-22-32071	313	
421-22-32250	311	14
	313	14
421-22-32330	311	4
	313	4
421-22-32431	311	8
	313	8
421-22-32460	311	10
	313	10
	325	9
	336	9
421-22-32470	311	15
	313	15
421-22-32480	311	
	313	
421-22-32490	311	
	313	
421-22-32511	311	5
	313	5
421-22-32530	311	1
	313	1
421-22-32543	311	12
	313	12
421-22-32550	311	7
	313	7
421-22-32570	311	6
	313	6
	325	6
	336	6
421-22-32630	311	3
	313	3
421-22-32781	311	16
	313	16
421-22-32810	311	2
	313	2
421-22-32850	311	9
	313	9
	325	8
	336	8
421-22-32870	311	11
	313	11
421-22-33230	319	27
421-22-33510	313	17
421-22-33520	311	17
421-22-33811	317	16
	324	15
421-22-33930	318	9
421-22-37220	317	7
421-22-37310	317	8
421-22-37320	317	9
421-22-37371	317	12
421-22-37381	317	
421-22-37410	317	10
421-22-37450	317	11
421-22-37460	317	
421-22-37660	317	1
421-22-37700	317	
421-22-37720	317	2
421-22-37760	317	6
421-22-41200	315	
421-22-41220	315	1
	327	1
421-22-41240	315	9
	327	9
421-22-41570	324	9
	338	14
421-22-41810	315	4
421-22-41820	315	6
421-22-41860	317	15
	324	14
	325	10
	329	15
	336	10
	338	13
421-22-41960	316	
	328	
421-22-41970	316	17
	328	17

PartNumber	Page	Index
421-22-41980	316	
	328	
421-22-41990	316	
	328	
421-23-30034	325	
	327	
	330	
	332	
	333	
	336	
	338	
421-23-30083	325	
	327	
	329	
	330	
	332	
	333	
	336	
421-23-31095	327	
	329	
	330	
421-23-31161	331	25
421-23-31170	327	5
421-23-31360	331	26
421-23-31370	331	
421-23-31380	331	
421-23-31390	331	
421-23-31832	329	18
	338	17
421-23-32020	336	
421-23-32030	325	
421-23-32044	327	
	330	
	338	
421-23-32352	325	4
	336	4
421-23-32421	325	15
	336	15
421-23-32431	325	7
	336	7
421-23-32470	325	14
	336	14
421-23-32480	325	
	336	
421-23-32490	325	
	336	
421-23-32511	325	5
	336	5
421-23-32530	325	1
	336	1
421-23-32543	325	11
	336	11
421-23-32630	325	3
	336	3
421-23-32810	325	2
	336	2
421-23-33151	330	9
421-23-33170	329	17
	338	16
421-23-33231	331	31
421-23-33510	336	16
421-23-33520	325	16
421-23-33870	329	16
	338	15
421-23-41460	338	6
421-23-41500	338	
421-23-41810	327	4
421-23-41820	327	6
421-33-31242	320	2
421-33-31331	320	3
421-33-31340	320	5
421-33-31350	320	6
421-33-31371	320	1
421-33-31410	320	4
421-33-31430	319	23
421-33-31451	320	9
	332	9
421-33-31630	320	7
421-33-31640	332	7
421-33-31711	325	17
	336	17
421-33-31721	311	20
	313	20
	325	19
	336	19
421-33-31730	311	19
	313	19
	325	18
	336	18
421-33-31810	311	18
	313	18
421-33-32241	332	2
421-33-32331	332	3
421-33-32340	332	4
421-33-32350	332	6
421-33-32381	332	1
421-33-32420	331	30
421-35-45200	726	9
	727	16
	728	16
421-40-12440	571	9
	696	2
421-40-12450	571	10
421-40-12550	571	11
421-40-12560	571	12
421-40-22650	572	21
421-40-32314	571	1
421-40-32410	571	13
	572	20
421-40-32420	571	14
421-40-42211	691	
421-40-42220	691	
421-40-42230	691	
421-40-42240	691	
421-40-42310	691	2
421-40-42320	691	3
421-40-42330	691	4
421-40-42340	691	5
421-40-42350	691	1
421-40-42360	691	
421-40-42380	691	7
421-40-42390	691	8
421-40-42410	691	9
421-40-42420	691	10
421-40-42430	691	11
421-40-42440	691	12
421-40-42450	691	13
421-40-42460	691	14
421-40-42470	691	15
421-40-42480	691	16
421-40-42510	691	17
421-40-42520	691	18
421-40-42530	691	19
421-40-42540	691	20
421-43-19131	810	1
421-43-19140	810	4
421-43-22360	696	1
421-43-22562	717	4
421-43-22571	717	5
421-43-26141	568	
421-43-26151	568	5
421-43-27920	717	6
421-43-28431	630	21
421-43-29110	729	1
	730	1
421-43-29120	729	7
	730	7
421-43-32912	700	43
421-43-32922	700	44
421-43-36160	568	
421-43-36170	568	9
421-43-37362	699	31
421-43-37591	642	12
	642	15
	649	12
	649	15
	657	12
	657	15
	660	5
	665	12
	665	15
	667	5
421-43-37770	699	32
421-43-38142	642	
	649	
	657	
	660	
	665	
	667	
421-43-38332	642	16
	649	16
	657	16
	660	6
	665	16
	667	6
421-43-38430	642	8
	642	17
	649	8
	649	17
	657	8
	657	17
	660	7
	665	8
	665	17
	667	7
421-43-38523	642	
	649	
	657	
	665	
421-43-38530	642	
	649	
	657	
	665	
421-43-38540	642	
	649	
	657	
	665	
421-43-38550	642	
	649	
	657	
	665	
421-43-38560	642	
	649	
	657	
	665	
421-43-38570	642	
	649	
	657	
	665	
421-43-38580	642	
	649	
	657	
	665	
421-43-38740	642	
	649	
	657	
	665	
421-43-39110	729	15
421-43-41110	726	1
421-43-41120	726	5
421-43-41130	726	15
421-43-41140	703	32
	709	32
421-43-46120	568	20
421-43-47102	582	1

PartNumber	Page	Index
421-43-47150	703	1
	709	1
421-43-47160	703	37
421-43-47190	703	20
	709	20
421-43-47260	727	21
	728	21
421-43-47270	703	4
421-43-47330	706	1
421-43-47370	582	19
421-43-47420	704	44
421-43-47430	703	19
	709	19
421-43-47510	727	13
	728	13
421-43-47560	306	1
421-43-47570	306	6
421-43-47620	727	5
421-43-47630	727	9
	728	9
421-43-47640	727	27
	728	27
421-43-47670	700	39
421-43-47680	694	2
	700	52
421-43-47691	698	1
421-43-47710	696	13
421-43-47720	696	22
421-43-47730	696	12
421-43-47740	696	21
421-43-47750	697	2
421-43-47760	702	14
421-43-47770	696	10
421-43-47780	699	35
421-43-47790	699	27
421-43-47810	696	4
421-43-47820	647	37
	653	35
	697	26
421-43-47830	646	8
	652	8
421-43-47840	699	15
421-43-47850	699	16
421-43-47860	694	1
	700	51
421-43-47890	702	3
	707	3
421-43-47910	701	1
421-43-47920	701	2
421-43-47930	701	5
421-43-47950	699	1
421-43-47980	700	36
421-43-48110	646	4
	652	4
421-43-48130	646	5
	652	5
	661	5
	669	5
421-43-48140	646	6
	652	6
	661	6
	669	6
421-43-48150	444	
	444	28
	445	
	457	
	457	28
	646	7
	652	7
	661	7
	669	7
421-43-48160	644	7
421-43-48170	622	8
	634	8
	644	8
421-43-48182	649	27
421-43-48190	643	27
421-43-48210	622	2
	634	2
	644	2
421-43-48232	646	
	652	
421-43-48340	696	17
421-43-48410	701	8
421-43-48550	698	22
421-43-48640	698	28
421-43-49171	618	1
	640	1
	656	1
421-46-11361	484	13
	484	14
421-46-11372	484	3
	484	9
421-46-11382	484	
421-46-11421	484	17
421-46-11431	484	18
421-46-11441	484	
421-46-11451	484	
421-46-11470	484	7
421-46-11710	484	1
421-46-11730	484	16
421-46-11741	484	6
421-46-11771	488	6
421-46-11781	488	7
421-46-12721	489	2
	499	2
421-46-12740	489	5
	499	5
421-46-12920	489	1
	499	1
421-46-21760	488	1
	488	2
	507	11
421-46-34420	489	11
	499	11
421-46-36222	507	3
421-46-37110	502	1
421-46-37120	502	2
421-46-37130	502	4
421-46-37140	502	11
421-46-37150	502	12
421-46-37160	502	15
421-46-37170	502	16
421-46-41461	484	27
421-46-41480	484	31
421-46-41502	474	1
421-46-41720	484	15
421-46-42160	479	2
	480	2
	482	2
	483	2
421-46-42301	480	1
421-46-43110	484	21
421-46-44110	489	6
421-46-44170	494	
421-46-44310	490	4
	493	4
421-46-44320	490	5
	493	5
421-46-44340	490	6
	493	6
421-46-44350	490	7
	493	7
421-46-44380	490	
	493	
421-46-44391	492	1
421-46-44410	492	16
421-46-44431	494	
421-46-44440	490	
	493	
421-46-44460	490	13
	493	13
421-46-44640	494	
421-46-45140	776	4
421-46-45170	494	8
	497	2
421-46-45240	776	1
421-46-45250	775	1
	777	1
421-46-45290	775	8
	777	4
421-46-46140	503	2
	506	2
421-46-46150	503	5
	506	5
421-46-46210	504	3
421-46-46230	507	7
421-46-46271	506	8
421-46-46290	814	
421-46-46340	814	
421-54-22990	760	13
	766	5
	767	5
	770	5
421-54-25610	773	16
421-54-25620	773	
421-54-25630	773	
421-54-25640	773	
421-54-25650	773	
421-54-25660	773	
421-54-31740	737	2
	737	12
	751	2
	751	12
421-54-32313	573	9
421-54-32323	573	10
421-54-33240	742	1
421-54-34411	761	5
421-54-34421	761	6
421-54-34432	761	7
421-54-34442	761	8
421-54-34550	760	8
	761	10
	762	24
	763	20
	764	13
	766	20
	767	20
	767	23
	770	20
421-54-34611	766	26
	767	29
	770	26
421-54-34691	761	11
421-54-34730	761	12
421-54-35180	764	14
421-54-41112	732	1
	750	1
421-54-41121	732	18
	750	18
421-54-41140	737	6
	737	16
	751	6
	751	16
421-54-41160	182	1
	205	1
421-54-41172	751	1
421-54-41182	751	11
421-54-41191	751	21
421-54-41211	733	1
421-54-41221	733	4
421-54-41230	734	28
421-54-41240	734	29
421-54-41250	734	32
421-54-41260	734	33

PartNumber	Page	Index
421-54-41320	732	21
	740	17
	750	21
	754	19
421-54-41350	735	3
	756	3
421-54-41390	735	6
421-54-41410	733	11
421-54-41420	733	12
421-54-41430	733	13
421-54-41440	733	14
421-54-41451	750	22
421-54-41461	750	25
421-54-41470	738	32
	752	32
421-54-41520	739	8
421-54-41530	739	9
421-54-41540	739	10
421-54-41551	739	11
421-54-41560	739	12
421-54-41570	739	13
421-54-41580	739	14
421-54-41590	739	1
421-54-41610	739	4
421-54-41620	744	1
421-54-41660	739	7
421-54-41670	748	9
421-54-41680	748	10
421-54-41690	748	1
421-54-41710	748	2
421-54-41720	748	3
421-54-41730	748	4
421-54-41740	748	5
421-54-41750	748	6
421-54-41761	748	7
421-54-41771	748	8
421-54-41780	744	5
421-54-41790	739	5
421-54-41811	744	7
421-54-41830	744	8
421-54-41840	744	9
421-54-41860	739	2
421-54-41870	739	3
421-54-41880	735	12
	756	12
421-54-41910	735	7
	756	7
421-54-41920	735	8
	756	8
421-54-41930	736	7
	753	7
421-54-41940	736	8
	753	8
421-54-41960	745	1
421-54-41970	745	5
421-54-41980	745	6
421-54-42120	765	2
421-54-42210	736	9
	753	9
421-54-42220	178	11
	201	11
421-54-42230	178	12
	201	12
421-54-42241	178	27
	201	27
421-54-42251	178	28
	201	28
421-54-42260	170	17
	193	17
421-54-42270	170	22
	193	22
421-54-42281	745	7
421-54-42290	733	10
421-54-42330	745	19
421-54-42340	746	25
421-54-42350	746	31
421-54-42360	746	32
421-54-42371	746	37
421-54-42381	746	36
421-54-42391	737	25
	751	25
421-54-42410	182	2
	205	2
421-54-42441	751	22
421-54-42460	740	23
421-54-42470	740	24
421-54-42480	733	3
	733	6
	736	2
	753	2
421-54-42490	740	8
	754	9
421-54-42510	735	15
	756	15
421-54-42520	747	3
421-54-42530	170	25
	193	25
421-54-42550	188	1
	211	1
421-54-42560	747	1
421-54-42570	170	28
	193	28
421-54-42580	747	2
421-54-42590	747	4
421-54-42620	170	29
	193	29
421-54-42630	170	30
	193	30
421-54-42640	170	31
	193	31
421-54-42650	744	3
421-54-42670	744	6
421-54-42680	744	10
421-54-42690	732	12
	750	12
421-54-42711	178	16
	201	16
421-54-42721	178	15
	201	15
421-54-42740	188	2
	211	2
421-54-42750	188	3
	211	3
421-54-42761	188	4
	211	4
421-54-43110	745	8
	746	42
421-54-43120	745	9
	746	43
421-54-43231	737	1
421-54-43241	737	11
421-54-43361	741	33
	755	36
421-54-43371	741	34
	755	37
421-54-43380	740	30
	755	33
421-54-43420	736	12
	753	12
421-54-43431	736	1
421-54-43440	736	14
	753	14
421-54-43450	736	13
	753	13
421-54-43460	740	1
421-54-43470	740	10
421-54-43480	740	22
421-54-43530	737	21
421-54-43540	737	22
421-54-43551	732	22
421-54-43561	732	25
421-54-43570	587	1
421-54-43580	732	17
	750	17
421-54-43590	170	32
	193	32
421-54-43690	765	3
421-54-43730	736	17
	753	17
421-54-43760	747	5
421-54-43770	747	6
421-54-43780	740	29
	755	32
421-54-43790	765	4
421-54-43810	756	6
421-54-44150	767	18
421-54-44160	765	17
421-54-44230	766	18
	770	18
421-54-44260	769	19
421-54-44362	766	1
	770	1
421-54-44392	766	29
	767	32
	770	29
421-54-44430	769	11
421-54-44441	770	2
421-54-44451	767	2
421-54-44491	769	22
421-54-44570	760	34
421-54-44582	767	1
421-54-44590	769	16
421-54-44610	490	16
	493	16
421-54-44620	490	19
	493	19
421-54-44660	765	18
421-54-44710	760	1
421-54-44720	760	2
421-54-44730	760	3
421-54-44740	760	4
421-54-44770	751	28
421-54-44840	765	16
421-54-44861	766	21
	767	24
	770	21
421-54-44870	760	5
421-54-44971	769	2
421-54-45170	772	2
421-54-45180	771	4
	772	4
421-54-45190	771	2
421-54-45210	733	18
421-54-45220	733	19
421-54-45230	764	7
421-54-45240	764	8
421-54-45250	764	9
421-54-45270	760	14
421-54-45280	760	15
421-54-45380	754	2
	754	3
	754	12
	754	13
	754	27
421-54-45390	754	23
421-54-45410	763	1
421-54-45420	763	7
421-54-45430	762	17
	763	13
421-54-45440	762	18
	763	14
421-54-45450	762	19
	763	15
421-54-45460	762	20
	763	16

PartNumber	Page	Index
421-54-45480	762	25
	763	21
421-54-45510	170	26
	193	26
421-54-45520	170	27
	193	27
421-54-45540	754	1
421-54-45550	754	11
421-54-45560	754	24
421-54-45570	754	25
421-54-45580	754	26
421-54-45590	753	1
421-54-45610	762	6
	763	4
421-54-45620	762	14
	763	10
421-54-45630	744	2
421-54-45640	744	4
421-54-45731	762	1
421-54-45741	762	9
421-54-45910	762	26
421-54-48110	759	1
421-54-48120	759	2
421-54-48130	759	3
421-54-48140	759	4
421-54-48180	732	16
	750	16
421-54-48510	640	4
421-56-21720	540	7
421-57-31130	531	1
421-57-31190	517	16
	520	29
421-57-31510	527	1
421-57-31520	527	2
421-57-31541	527	3
421-57-31550	527	4
421-57-31560	527	15
421-57-31570	527	23
421-57-31580	527	24
421-57-31590	527	25
421-57-31610	527	26
421-57-31620	527	
421-57-31630	527	5
421-57-31640	527	7
421-57-31650	527	
421-57-31660	527	9
421-57-31670	527	10
421-57-31680	527	11
421-57-31690	527	12
421-57-31710	527	16
421-57-31720	527	17
421-57-31730	527	18
421-57-31740	527	13
421-57-31750	527	14
421-57-31760	527	
421-57-31770	527	19
421-57-31780	527	20
421-57-31790	527	21
421-57-31810	527	22
421-57-31820	527	6
	527	8
421-57-41110	527	
421-57-41311	516	
421-57-41320	517	5
421-57-41330	517	6
421-60-11622	342	2
	348	2
421-60-35170	184	
	207	
421-60-35180	184	
	207	
421-60-35190	184	
	207	
421-60-45140	345	31
421-60-45150	343	
421-60-45160	343	15
421-60-45170	345	27
421-60-45180	344	8
421-60-45190	343	5
421-60-45220	345	32
421-60-45390	344	13
421-60-45410	345	35
421-60-45420	345	36
421-60-45430	345	37
421-60-45440	346	38
421-60-45450	346	39
421-60-45520	344	1
421-60-45611	342	1
	348	1
421-62-11940	88	29
	135	3
	138	3
	139	37
421-62-12120	460	11
421-62-12310	465	12
421-62-12320	465	15
421-62-18560	446	9
	446	24
	447	25
	458	9
	458	24
	462	6
	463	8
	464	20
421-62-21130	463	5
421-62-32351	421	
421-62-32360	421	1
421-62-32672	436	7
421-62-32682	436	8
421-62-32700	431	
421-62-41120	180	2
	203	2
421-62-41130	180	4
	203	4
421-62-41140	180	6
	203	6
421-62-41150	180	11
	203	11
421-62-41180	303	11
421-62-41190	181	7
	204	7
421-62-41211	180	14
	203	14
421-62-41220	181	17
	204	17
	215	
	215	12
421-62-41240	180	3
	203	3
421-62-41260	181	1
	204	1
421-62-41431	463	15
421-62-41440	303	14
421-62-41450	303	6
421-62-41470	428	26
421-62-41480	180	1
	203	1
421-62-41490	180	5
	203	5
421-62-41510	174	7
	197	7
421-62-41520	439	14
	440	12
421-62-41560	429	39
421-62-41750	426	18
	435	21
421-62-41810	174	24
	197	24
421-62-41860	174	18
	197	18
421-62-41870	174	35
	197	35
421-62-41970	342	16
	348	16
421-62-42111	393	8
421-62-42120	464	13
421-62-42131	703	34
421-62-42142	464	16
421-62-42150	394	1
421-62-42161	395	1
421-62-42171	394	15
421-62-42191	454	1
421-62-42290	463	4
421-62-42370	463	1
	487	4
421-62-42380	463	2
421-62-42510	175	43
	198	43
421-62-42730	428	16
421-62-43110	443	6
421-62-43120	443	10
421-62-43140	447	11
421-62-43150	447	12
421-62-43212	446	1
	458	1
421-62-43222	446	2
	458	2
421-62-43243	447	1
	832	7
421-62-43252	447	5
421-62-43261	447	32
421-62-43270	447	29
421-62-43280	446	20
421-62-43290	443	18
421-62-43310	443	1
421-62-43320	442	1
421-62-43330	441	1
421-62-43340	441	6
421-62-43350	444	4
	457	4
421-62-43360	444	6
	457	6
421-62-43370	444	8
	457	8
	647	
	647	38
	653	
	653	36
421-62-43380	444	10
	457	10
421-62-43390	455	8
421-62-43520	420	8
421-62-43630	446	13
	458	13
421-62-43640	446	14
	458	14
421-62-43830	420	21
421-62-43851	450	1
421-62-43861	450	3
421-62-43951	705	26
421-62-43960	705	22
421-62-43981	455	9
421-62-43990	428	2
421-62-44240	442	14
421-62-44250	442	9
421-62-44260	444	20
	457	20
421-62-44321	421	28
421-62-44740	181	3
	204	3
421-62-44820	420	15
421-62-44830	420	25
421-62-44850	837	2
421-62-44860	837	1
421-62-44910	437	22

PartNumber	Page	Index
421-62-45151	468	1
421-62-45161	421	34
421-62-45180	454	13
421-62-45210	215	
	215	13
	441	12
	442	23
	451	1
	456	1
421-62-45250	424	30
421-62-45310	420	6
421-62-45320	421	7
	436	18
	441	11
421-62-45331	421	11
421-62-45340	421	15
421-62-45351	421	22
421-62-45360	300	20
421-62-45370	423	1
421-62-45380	423	9
421-62-45390	423	12
421-62-45430	426	8
	438	50
421-62-45450	292	2
421-62-45470	426	15
	434	3
421-62-45480	435	1
421-62-45490	435	14
421-62-45510	300	21
421-62-45520	428	12
421-62-45530	436	9
421-62-45540	428	11
421-62-45550	438	41
421-62-45570	427	7
421-62-45580	428	32
421-62-45590	428	33
421-62-45610	428	34
421-62-45620	430	21
421-62-45630	427	17
421-62-45640	430	20
421-62-45650	345	1
421-62-45660	345	6
421-62-45670	345	10
421-62-45680	439	22
	440	20
421-62-45690	439	27
421-62-45711	450	13
421-62-45720	452	7
421-62-45730	451	8
	456	9
421-62-45740	451	16
	456	17
421-62-45750	451	19
	456	20
421-62-45760	453	11
421-62-45770	453	16
421-62-45790	427	11
421-62-45810	439	1
421-62-45820	215	1
421-62-45830	469	16
	471	16
421-62-45840	424	18
421-62-45860	426	1
	435	5
421-62-45890	453	1
421-62-45910	424	1
421-62-45920	424	7
421-62-45930	424	20
421-62-46141	453	24
421-62-46150	465	9
421-62-46170	452	1
421-62-46240	430	17
421-62-46310	442	15
421-62-46320	442	10
421-62-46371	442	6
421-62-46380	442	20
421-62-46411	436	1
421-62-46420	436	15
421-62-46440	369	8
421-62-46450	369	
421-62-46460	444	13
	457	13
421-62-46510	444	23
	457	23
421-62-46610	428	5
421-62-46620	430	24
421-62-46710	428	9
421-62-46720	430	1
421-62-46730	427	9
421-62-46740	438	46
421-62-46880	419	12
421-62-47440	420	1
421-62-47460	420	19
421-62-47920	424	11
421-62-47930	424	13
421-64-00010	885	K08
421-64-15501	466	
421-64-15530	466	3
421-64-15540	466	4
421-64-15550	466	5
421-64-15560	466	6
421-64-15570	466	7
421-64-15580	466	8
421-64-15590	466	9
421-64-15910	466	10
421-64-15920	466	11
421-64-15930	466	12
421-64-15940	466	13
421-64-15950	466	14
421-64-23120	362	7
	368	7
	371	7
	372	7
	387	7
	391	7
421-64-23130	362	9
	368	9
	371	9
	372	9
	387	9
	391	9
421-64-25130	168	30
	191	30
	214	30
421-64-41110	362	3
	368	3
	371	3
	372	3
	387	3
	391	3
421-64-41121	362	11
	368	11
	387	11
	391	11
421-64-41130	362	12
	368	12
	371	12
	372	12
	387	12
	391	12
421-64-41140	362	8
	368	8
	371	8
	372	8
	387	8
	391	8
421-64-41150	362	10
	368	10
	371	10
	372	10
	387	10
	391	10
421-64-45110	392	
421-70-00082	808	
	812	
	814	
421-70-11251	808	12
	811	11
	812	12
	814	12
421-70-11261	808	4
	811	4
	812	4
	814	4
421-70-11272	808	8
	811	7
	812	8
	814	8
421-70-11280	484	30
	808	17
	808	22
	809	4
	809	13
	809	23
	811	16
	811	21
	812	17
	812	22
	814	17
	814	22
	833	6
	833	12
	834	6
	834	12
	837	13
	837	18
421-70-11331	809	
421-70-11381	808	3
	811	3
	812	3
	814	3
421-70-11410	809	8
	809	18
421-70-11442	808	
	809	
	811	
	812	
	814	
421-70-11471	809	2
421-70-11481	809	
	833	4
	834	4
421-70-11940	837	11
421-70-11961	808	15
	811	14
	812	15
	814	15
421-70-11970	833	7
	834	7
421-70-11980	833	1
	834	1
421-70-21240	808	2
	811	2
	812	2
	814	2
421-70-21960	837	15
421-70-22140	815	5
	816	7
	817	5
421-70-22980	822	1
421-70-22990	822	2
421-70-31202	808	
421-70-31950	809	1
421-70-32740	817	3
421-70-32920	815	2

PartNumber	Page	Index
	816	2
	817	2
421-70-32980	823	1
421-70-40110	815	9
421-70-41380	833	8
	834	8
421-70-41410	837	14
	837	16
421-70-41500	808	
	812	
421-70-41910	809	5
421-70-41920	808	18
	809	15
	811	17
	812	18
	814	18
421-70-42320	817	1
421-70-42400	817	
421-70-42611	815	
421-70-42620	815	1
421-70-42630	815	3
421-70-42930	815	4
	817	4
421-803-3130	816	6
421-803-3150	816	4
421-803-3240	816	3
421-803-3F10	816	5
421-803-4400	816	
421-803-4410	816	1
421-815-1121	821	2
421-815-2110	821	1
421-815-3210	819	1
421-815-3220	819	2
421-838-1110	818	1
421-838-1120	818	2
421-850-4142	475	1
421-870-3120	730	15
421-877-1190	813	7
421-877-1210	813	8
421-877-3330	813	1
421-877-3340	813	2
421-877-4111	656	4
421-877-4122	665	27
421-877-4130	658	27
421-877-4150	627	31
	638	33
	664	46
	671	46
421-877-4170	661	4
	669	4
421-877-4180	663	29
	670	29
421-877-4201	661	
	669	
421-877-4210	661	9
	669	9
421-877-4230	664	45
	671	45
421-877-4301	663	
	670	
421-877-4311	663	31
	670	31
421-877-4320	664	32
	670	32
421-877-4331	663	30
	670	30
421-877-4510	461	1
421-877-4520	461	2
421-877-4530	458	20
421-877-4540	499	6
421-877-4571	460	3
421-877-4581	460	5
421-877-4590	460	7
421-877-4630	500	1
	501	1

PartNumber	Page	Index
421-877-4640	812	
421-877-4712	477	1
421-877-4730	462	1
421-877-4740	462	2
421-925-3140	612	2
	613	2
	614	2
	615	2
421-925-3160	540	24
421-925-3170	550	9
421-925-3510	616	1
421-925-4610	536	3
421-925-4620	598	4
421-925-4642	536	
421-925-4652	598	
421-925-4671	536	14
421-925-4681	598	15
421-925-4711	536	23
421-925-4721	598	24
421-925-4740	536	31
421-925-4750	536	24
	598	25
421-925-4760	536	25
421-925-4770	598	26
421-925-4780	536	26
421-925-4790	536	27
421-925-4810	598	27
421-925-4820	598	28
421-925-4830	536	28
	598	29
421-925-4840	536	29
	598	30
421-925-4850	536	30
	598	31
421-925-4860	536	
	598	
421-925-4870	536	17
	598	18
421-925-4890	598	32
421-925-4910	537	33
	599	34
421-925-4920	536	4
	598	5
421-925-4930	536	7
	598	8
421-925-4940	536	13
	598	14
421-925-5950	536	10
	598	11
421-925-5960	536	11
	598	12
421-925-5970	536	22
	598	23
421-926-3612	544	6
421-926-4112	535	1
421-926-4311	544	13
421-926-4631	543	5
421-926-4641	543	6
421-926-4650	543	7
421-926-4661	543	16
421-926-4670	538	29
421-926-4690	541	42
421-926-4710	551	6
421-926-4780	551	2
	551	10
421-926-4950	773	6
421-926-4960	773	7
421-926-4990	549	3
	601	3
421-93-41020	161	6
421-93-41310	842	14
	845	13
	847	13
	849	14
	850	8

PartNumber	Page	Index
	853	8
	855	8
	858	14
	861	14
	863	8
421-93-41390	846	14
	860	14
421-93-42230	842	17
	845	16
	847	16
	849	17
	850	11
	853	11
	855	11
	858	17
	861	17
	863	11
421-93-42240	842	15
	845	14
	847	14
	849	15
	850	9
	853	9
	855	9
	858	15
	861	15
	863	9
421-93-42250	842	16
	845	15
	847	15
	849	16
	850	10
	853	10
	855	10
	858	16
	861	16
	863	10
421-971-4160	497	4
421-971-4170	497	3
421-971-4190	497	
421-975-4151	775	10
421-975-4160	775	6
421-975-4210	775	4
421-975-4220	775	7
421-S33-3282	523	1
421-S33-3911	654	1
421-S33-3921	654	
421-S33-3931	654	2
421-S33-3940	654	3
421-S33-4350	707	14
421-S62-4110	183	4
	206	4
421-S62-4120	183	1
	206	1
421-S62-4130	606	8
421-S62-4150	606	1
421-S62-4160	183	7
	206	7
421-S62-4210	605	5
421-S62-4220	125	1
421-S62-4230	605	12
421-S62-4250	585	8
421-S62-4340	605	4
421-S62-4510	607	1
421-S62-4520	607	12
421-S62-4530	607	9
421-S95-7100	811	
421-S95-7160	511	13
421-S95-7170	511	19
421-S95-7180	512	1
421-S95-7190	513	39
421-S95-7200	811	
421-S95-7230	513	33
421-S95-7240	513	34
421-S95-7260	510	1

PartNumber	Page	Index
421-S95-7270	512	30
421-S95-7280	509	21
421-S95-7380	481	2
421-S95-7430	495	10
	500	10
421-S95-7452	476	1
421-S95-7471	481	1
421-S95-7481	509	13
421-S95-7490	508	4
421-S95-7500	811	
421-S95-7520	513	36
421-S95-7530	513	7
421-S95-7540	513	8
421-S95-7550	513	11
421-S95-7560	513	13
421-S95-7570	513	15
421-S95-7580	513	23
421-S95-7590	512	4
421-S95-7630	509	20
	511	2
	511	8
	511	14
	511	20
	512	2
	512	5
	512	7
	512	22
	513	9
	513	35
421-S95-7640	509	3
	509	9
	509	16
421-S95-7651	512	23
421-S95-7660	512	24
421-S95-7670	513	1
421-S95-7680	513	2
421-S95-7710	509	1
421-S95-7720	509	7
421-S95-7740	511	1
421-S95-7750	511	7
421-S95-7940	766	2
421-S96-H230	508	
421-S96-H240	508	
421-S96-H290	508	8
421-S96-H300	508	9
421-S96-H310	508	10
421-S96-H322	508	11
421-T79-3210	820	1
421-T79-3220	820	2
421-T80-4110	223	1
421-U12-3101	757	
421-U12-3120	757	1
421-U12-3140	757	3
421-U12-3150	757	4
421-U12-3160	757	5
421-U12-3170	757	6
421-U12-3181	757	7
421-U12-3190	757	8
421-U12-3230	757	11
421-U12-3240	757	12
421-U12-3250	757	13
421-U12-3260	757	14
421-U12-3330	757	2
421-U44-3591	713	6
421-U44-3611	713	12
421-U44-3730	713	25
421-U44-3820	724	17
421-U44-3830	323	3
	335	3
421-U44-4280	478	1
421-U44-4290	483	1
421-U44-4370	722	4
421-U44-4380	722	20
421-U44-4390	718	3
421-U44-4420	723	5

PartNumber	Page	Index
421-U44-4430	724	15
421-U44-4440	723	2
421-U44-4460	724	27
421-U44-4470	335	11
421-U44-4480	720	7
421-U44-4490	718	31
421-U44-4510	371	11
	372	11
421-U44-4520	709	4
421-U44-4530	709	34
421-U44-4550	724	14
421-U44-4560	717	1
421-U44-4570	710	44
421-U44-4580	713	15
421-U44-4630	713	18
421-U44-4650	716	3
421-U44-4660	721	10
421-U44-4710	719	44
421-U44-4720	718	30
421-U44-4730	717	13
421-U44-4750	724	1
421-U44-4760	723	1
421-U44-4780	722	31
421-U44-4790	335	1
421-U44-4810	722	1
421-U44-4820	720	10
421-U44-4830	720	11
421-U44-4840	720	1
421-U44-4850	718	1
421-U44-4860	721	1
421-U44-4870	721	14
421-U44-4890	718	2
421-U44-4910	440	1
421-U44-4920	722	32
421-U44-4940	323	5
421-U44-4950	245	12
421-U44-4970	714	44
421-U44-4980	722	2
421-U44-4990	722	11
421-U45-4110	724	9
421-U45-4120	718	7
421-U45-4130	718	18
421-U45-4140	720	5
421-U45-4150	709	37
421-U45-4160	503	8
421-U45-4170	323	1
421-U45-4180	713	39
421-U45-4190	716	13
421-U45-4240	721	16
421-U45-4250	456	2
421-U45-4260	440	25
421-U45-4280	715	
421-U45-4320	335	5
421-U45-4340	721	11
421-U45-4360	728	5
421-U45-4380	721	15
421-U45-4390	715	7
421-U45-4420	496	7
421-U45-4430	496	10
421-U45-4440	496	17
421-U45-4450	496	22
421-U45-4460	496	21
421-U45-4470	482	1
421-U94-3630	812	
421-V91-3140	622	18
	634	18
421-V91-4111	618	4
421-V91-4120	622	7
	634	7
421-V91-4150	627	40
	639	43
	655	3
421-V91-4160	618	15
421-V91-4210	624	30
	636	40

PartNumber	Page	Index
421-V91-4230	624	32
	636	42
421-V91-4260	625	35
	636	45
421-V91-4301	636	
421-V91-4311	636	46
421-V91-4400	624	
	636	
421-V91-4410	624	34
	636	44
421-W10-4100	782	
421-W10-4110	782	1
421-W29-4100	780	
421-W29-4110	780	1
421-W30-4100	781	
421-W30-4110	781	1
421-X29-1110	793	1
421-X29-1130	791	1
421-X29-1150	792	1
421-X55-3110	803	1
421-X55-3120	805	1
421-X58-1110	800	1
421-X83-3110	789	1
421-X84-2111	804	1
421-X85-4110	806	1
421-Y29-1110	790	1
421-Z65-H150	875	19
	876	5
	877	17
	878	21
	879	7
421-Z65-H180	762	
	762	29
	875	15
	876	1
	877	13
	878	17
	879	3
421-Z65-H190	875	16
	876	2
	877	14
	878	18
	879	4
421-Z84-4110	495	1
	496	1
	498	1
421-Z84-4120	495	3
	496	3
	498	3
	500	3
	501	3
421-Z84-4130	495	2
	496	2
	498	2
	500	2
	501	2
421-Z84-4140	495	6
	496	6
	498	6
	500	6
	501	6
421-Z84-4150	495	4
	496	4
	498	4
	500	4
	501	4
421-Z84-4180	495	8
	496	8
	498	8
	500	8
	501	8
421-Z84-4210	495	9
	496	9
	498	9
	500	9

PartNumber	Page	Index
	501	9
421-Z84-4220	498	10
	501	10
421-Z84-4240	495	11
	496	11
	498	11
	500	11
	501	11
421-Z84-4260	495	13
	496	13
	498	13
	500	13
	501	13
421-Z84-4270	495	12
	496	12
	498	12
	500	12
	501	12
421-Z84-4290	495	14
	496	14
	498	14
	500	14
	501	14
421-Z84-4300	495	16
	496	16
	498	16
	500	16
	501	16
421-Z84-4330	495	18
	496	18
	498	18
	500	18
	501	18
421-Z84-4340	495	19
	496	19
	498	19
	500	19
	501	19
421-Z84-4351	495	20
	496	20
	498	20
	500	20
	501	20
421-Z84-4411	495	26
	496	26
	498	26
	500	26
	501	26
421-Z84-4420	494	7
421-Z84-4460	494	6
421-Z84-4470	494	5
421-Z84-4530	495	7
	498	7
	500	7
	501	7
421-Z84-4590	495	22
	498	22
	500	22
	501	22
421-Z84-4610	495	5
	496	5
	498	5
	500	5
	501	5
421-Z84-4710	495	23
	496	23
	498	23
	500	23
	501	23
421-Z84-4720	495	24
	496	24
	498	24
	500	24
	501	24
421-Z84-4730	495	21

PartNumber	Page	Index
	498	21
	500	21
	501	21
421-Z84-4740	495	25
	496	25
	498	25
	500	25
	501	25
421-Z84-4760	495	15
	496	15
	498	15
	500	15
	501	15
421-Z84-4770	495	17
	498	17
	500	17
	501	17
421-Z84-4930	494	4
421-Z84-4960	494	3
421-Z84-4970	494	2
421-Z84-4980	494	12
421-Z84-4991	494	10
421-Z90-4711	479	1
423-03-11531	190	7
	213	7
423-03-31710	174	1
	197	1
423-03-41340	168	19
	191	19
	214	19
423-03-41350	168	20
	191	20
	214	20
423-03-41370	168	29
	191	29
	214	29
423-03-41390	168	23
	191	23
	214	23
423-04-11362	218	25
423-04-41210	218	8
	223	8
423-06-33130	261	1
	262	1
423-06-34650	256	1
423-06-42330	253	1
423-06-42420	576	9
	618	13
	643	50
	650	49
	660	15
	667	15
423-06-42430	622	17
	634	17
	644	18
423-06-42510	248	26
423-06-42611	693	5
423-06-42622	576	23
423-06-42633	576	6
423-06-42662	580	1
423-06-42671	580	10
423-06-42681	580	25
423-06-42691	580	19
423-06-42730	580	32
423-06-42740	521	2
	622	16
	628	41
	634	16
	639	44
	644	17
	655	16
	655	20
423-06-42871	693	8
423-06-43130	258	4
423-06-43140	259	4

PartNumber	Page	Index
423-06-44260	235	3
423-06-44270	239	3
423-06-44680	234	5
423-06-45120	578	2
423-06-45133	578	3
423-06-45141	578	4
423-06-45151	578	5
423-06-45161	578	6
423-06-45170	579	33
	629	9
423-06-45181	263	16
423-06-45312	689	1
	690	1
423-06-45332	689	2
423-06-45343	689	19
423-06-45350	550	13
423-06-45360	550	12
423-06-45370	550	16
423-06-45380	676	1
	677	1
	678	1
	679	1
	680	1
	681	1
	682	1
	683	1
	684	1
	685	1
	686	1
	687	1
423-06-45390	550	11
423-06-45410	550	10
423-06-45440	550	17
423-06-45460	629	4
423-06-45470	629	5
423-06-45480	675	1
	677	3
	679	2
	681	3
	684	3
	686	3
423-06-45510	677	2
	681	2
	682	2
	683	2
	684	2
	685	2
	686	2
	687	2
423-06-45521	629	6
423-06-45530	674	1
	677	4
	678	2
	683	3
	684	4
	685	3
423-06-45550	629	7
423-06-45560	675	2
	678	3
	679	3
	680	2
	684	5
	685	4
	686	4
	687	3
423-06-45580	526	12
423-06-45590	263	33
423-06-45620	643	47
	660	16
423-06-47420	690	31
423-06-47440	690	25
423-06-47450	690	8
423-06-47460	690	9
423-06-47470	690	13
423-06-47480	690	21

PartNumber	Page	Index
423-06-H2660	508	2
423-07-31233	562	20
423-07-31242	562	21
423-07-31250	555	15
	590	27
423-07-31280	555	18
	590	30
423-07-31340	585	1
423-07-31350	558	6
	585	2
	593	6
423-07-31360	611	13
423-07-31410	590	11
	590	15
423-07-31420	590	21
423-07-31430	590	22
423-07-31481	594	
423-07-31503	559	
423-07-31533	556	
423-07-31544	559	
423-07-31552	559	
423-07-31563	561	4
423-07-31571	606	11
423-07-31641	550	2
423-07-31661	550	3
423-07-31673	562	25
423-07-31683	555	9
423-07-31693	555	10
423-07-31743	590	
423-07-31753	590	
423-07-31763	590	
423-07-31771	597	1
423-07-31782	552	16
423-07-31790	590	20
423-07-31802	594	
423-07-31811	591	
423-07-31841	596	4
423-07-31871	562	19
423-07-31880	562	3
423-07-31912	590	8
423-07-31921	590	9
423-07-31932	590	12
423-07-31941	590	13
423-07-31951	590	16
423-07-31960	590	17
423-07-31972	590	18
423-07-33422	562	11
423-07-33460	562	10
423-07-41721	586	23
423-07-43400	562	1
423-07-46110	584	1
423-07-46120	584	2
423-09-12110	503	1
	503	11
	504	2
	506	1
	506	11
	507	1
	509	15
423-09-41110	513	6
423-20-32631	266	5
	267	5
	268	3
423-20-32740	267	2
423-20-32750	266	3
	267	3
423-22-37602	329	
423-33-21410	319	26
	332	5
423-33-21430	331	27
423-40-32160	572	17
423-40-42120	573	13
423-40-42140	573	14
423-40-42150	572	22
423-40-42160	573	1
423-40-42172	572	1
423-40-42180	572	13
423-40-42190	572	7
423-40-42210	572	4
423-43-18430	263	4
423-43-27490	424	34
423-43-31350	696	6
423-43-37260	582	6
423-43-37270	582	4
	582	5
423-43-37520	697	4
423-43-37560	698	23
423-43-37571	698	24
423-43-37580	698	25
423-43-37620	698	26
423-43-37630	698	27
423-43-37650	698	29
423-43-37660	698	30
423-43-37670	698	31
423-43-37690	698	32
423-43-37720	698	33
423-43-38160	623	5
	645	5
423-43-38170	526	6
	623	6
	645	6
423-43-38320	627	35
	638	37
	646	15
	661	14
423-43-38330	627	36
	646	16
	652	15
	692	25
423-43-42410	565	1
423-43-46212	568	1
423-43-47250	582	7
423-43-47341	564	23
423-43-47350	564	9
423-43-47361	564	6
423-43-47430	454	19
	705	1
423-43-47690	703	9
	704	40
	709	9
	710	40
423-43-47710	698	34
423-43-48110	627	2
	638	3
	648	9
	663	10
	670	10
423-43-48130	643	32
	650	32
	658	32
	666	32
423-43-48161	626	31
	627	12
	637	31
	638	14
	648	5
	648	20
	663	5
	663	22
	670	5
	670	22
423-43-48193	643	28
	649	28
423-43-48231	643	35
	650	35
	658	35
	666	35
423-43-48243	642	
	649	
	657	
	665	
423-43-48261	642	13
	649	13
	657	13
	665	13
423-43-48281	618	9
	640	9
	656	9
423-43-48310	644	1
423-43-48321	623	1
	645	1
423-43-48340	627	9
	638	11
	648	17
	663	19
	670	19
423-43-48371	626	27
	637	27
	648	1
	663	1
	670	1
423-43-48382	626	28
	637	28
	648	2
	663	2
	670	2
423-43-48410	623	9
	645	9
423-43-48420	623	2
	645	2
423-43-48430	643	36
	650	36
	658	36
	666	36
423-43-48440	642	25
	649	25
	658	25
	665	25
423-43-48452	643	34
	650	34
	658	34
	666	34
423-43-48460	627	6
	638	8
	648	14
	663	16
	670	16
423-43-48470	627	18
	638	20
	646	26
	661	27
423-43-48512	646	9
	652	9
423-43-48720	643	29
	650	29
	658	29
	660	12
	666	29
	667	12
423-46-41430	484	22
423-46-42330	484	28
423-46-45121	776	5
423-54-32340	692	2
423-54-32391	692	7
423-54-32540	692	10
423-54-32612	602	3
	603	2
423-54-32622	602	4
	603	3
423-54-32631	602	1
	603	1
423-54-32742	610	4
423-54-32752	610	5
423-54-32762	610	6
423-54-32772	610	7

PartNumber	Page	Index
423-54-32793	610	8
423-54-33213	773	1
423-54-33221	773	2
423-54-33310	610	3
423-54-33320	610	13
423-54-33331	610	12
423-54-33341	610	15
423-54-33350	611	1
423-54-33360	611	4
423-54-33371	611	7
423-54-34410	761	2
423-54-34440	761	1
423-54-34730	760	25
423-54-34740	760	26
423-54-34780	760	27
423-54-37480	734	25
423-54-37580	737	28
423-54-37680	737	10
	737	20
	751	10
	751	20
423-54-41312	734	22
423-54-41320	766	6
	770	6
423-54-41330	767	6
423-54-41340	733	2
	733	5
423-54-41480	745	3
423-54-41631	617	1
423-54-42320	692	3
423-54-42330	692	12
423-54-42342	692	1
423-54-42361	692	19
423-54-42380	578	31
	692	21
423-54-42480	602	2
423-54-42490	692	14
423-54-42512	528	1
423-54-42650	692	11
423-54-42660	692	20
423-54-42670	521	1
	692	22
423-54-42680	618	14
	692	23
423-54-42720	692	4
423-54-42730	517	1
423-54-42740	517	9
423-54-42750	517	12
423-54-42760	517	13
423-54-42770	517	14
423-54-42790	492	9
	692	24
423-54-42870	692	8
423-54-42960	580	7
423-54-42990	578	32
	618	12
	643	49
	650	48
	660	14
	667	14
	692	9
423-54-44110	760	28
423-54-44130	760	22
423-54-44140	766	13
	767	13
	770	13
423-54-44150	760	18
423-54-44180	760	31
423-54-44370	765	1
423-54-44380	760	35
423-54-44390	766	
	767	
	770	
423-54-45110	771	1
	772	1
423-54-45120	771	7
	772	7
423-54-45140	771	3
	772	3
423-54-45150	771	8
	772	8
423-54-48460	344	4
423-54-48470	692	32
423-54-48490	738	35
	752	35
423-56-21910	545	4
	590	10
	590	14
	590	19
423-60-35421	343	18
423-60-35430	343	20
423-60-35460	343	19
423-60-35520	349	4
423-62-34290	363	1
	363	4
	369	1
	369	4
	388	1
423-62-34981	442	19
	454	9
423-62-35440	363	
	369	
423-62-35450	363	9
	363	12
	369	9
	369	12
423-62-41140	394	9
423-62-41150	394	8
423-62-41190	575	3
423-62-41330	450	8
	468	4
423-62-41460	435	12
423-62-41550	450	6
	468	5
423-62-41560	468	9
423-62-41670	472	1
423-62-41680	471	2
423-62-41690	471	1
423-62-41730	465	8
423-62-43221	454	8
423-62-44310	437	19
	437	27
423-62-52290	363	3
	363	6
	363	14
	369	3
	369	6
	369	15
	388	3
	394	28
	697	17
	699	18
423-64-45601	574	
423-64-45610	885	K11
423-70-11160	505	6
	833	10
	834	10
423-70-11210	808	20
	809	7
	809	17
	811	19
	812	20
	814	20
423-70-13114	826	1
423-70-13120	824	6
	825	4
	826	4
	827	4
423-70-13130	824	7
	825	5
	826	5
	827	5
423-70-13144	826	6
423-70-13154	826	7
423-70-13160	824	17
	825	13
	826	13
	827	13
423-70-13170	824	18
	825	14
	826	14
	827	14
423-70-13180	824	12
	825	8
	826	8
	827	8
423-70-41970	808	19
	809	6
	809	16
	811	18
	812	19
	814	19
423-70-41980	833	3
	834	3
423-842-1110	825	1
423-842-1120	825	6
423-842-1130	825	7
423-847-1111	824	3
423-847-1121	824	10
423-847-1131	824	11
423-847-1140	824	1
	824	8
423-877-2540	460	10
423-877-4170	661	8
	669	8
423-877-4721	658	28
	666	28
423-877-4741	663	25
	670	25
423-877-4750	661	15
	669	14
423-877-4810	660	1
	667	1
423-877-4860	627	14
	638	16
	663	24
	670	24
423-925-3780	536	5
	536	8
	598	6
	598	9
423-925-3790	536	6
	536	9
	598	7
	598	10
423-925-3810	536	12
	598	13
423-925-3850	536	15
	598	16
423-925-3860	536	16
	598	17
423-925-3880	536	18
	598	19
423-925-3940	536	19
	598	20
423-925-3950	536	20
	598	21
423-925-3960	537	32
	598	33
423-925-3990	536	21
	598	22
423-925-4115	536	1
423-925-4135	536	
423-925-4141	538	25
423-925-4163	542	3

PartNumber	Page	Index
423-925-4190	538	12
423-925-4214	542	1
423-925-4230	538	6
423-925-4241	542	19
	600	16
423-925-4253	542	20
	600	17
423-925-4271	542	5
	600	2
423-925-4334	542	16
	600	13
423-925-4341	542	2
	598	3
423-925-4360	542	13
	600	10
423-925-4383	590	1
423-925-4391	542	9
	600	6
423-925-4412	555	4
423-925-4420	555	8
423-925-4433	590	4
423-925-4443	590	5
423-925-4482	555	7
423-925-4510	545	22
423-925-4520	545	23
423-925-4530	562	12
423-925-4563	563	1
423-925-4574	563	10
423-925-4581	543	14
423-925-4612	552	27
423-925-4620	535	5
423-925-4630	540	30
423-925-4641	546	1
423-925-4651	546	2
423-925-4723	598	
423-925-4760	538	28
423-925-4811	545	5
423-925-4821	545	6
423-925-4832	545	13
423-925-4841	545	14
423-925-4851	545	9
423-925-4861	545	10
423-925-4890	544	19
423-925-4980	689	10
	690	4
423-926-3860	540	20
423-926-4483	545	1
423-926-4500	550	
423-926-4533	535	10
423-926-4542	535	11
423-926-4562	550	20
423-926-4577	555	1
423-926-4610	543	4
423-926-4620	543	12
423-926-4630	543	15
423-926-4640	538	24
	542	4
	600	1
423-926-4661	545	2
423-926-4682	545	20
423-926-4692	545	21
423-926-4711	543	1
423-926-4721	543	2
423-926-4731	543	3
423-926-4742	543	11
423-926-4751	543	13
423-926-4781	544	4
423-926-4823	535	6
	612	8
	613	8
	614	8
	615	8
	616	8
423-926-4832	545	3
423-926-4852	552	1
423-926-4883	545	19
423-93-41152	844	
	852	
	857	
423-93-41172	842	
	849	
423-93-41190	622	15
	634	15
	644	15
423-93-41311	850	
	853	
	855	
423-93-41370	845	
	847	
423-93-41410	859	34
	862	34
423-93-41420	859	35
	862	35
423-93-41450	846	
423-947-1101	604	
423-947-1110	604	1
423-947-1121	604	2
423-947-2150	604	3
423-957-4132	263	8
423-957-4152	263	9
423-957-4162	263	10
423-957-4181	263	1
423-976-4211	774	1
423-976-4230	774	2
423-S33-4111	520	10
423-S33-4121	520	20
423-S33-4131	520	13
423-S33-4150	470	1
423-S33-4160	469	2
423-S33-4180	469	1
423-S33-4260	520	27
423-S33-4270	520	28
423-S33-4320	654	13
423-S33-4370	654	10
423-S33-4380	654	19
423-S33-4390	655	1
423-S33-4410	655	19
423-S33-4420	655	22
423-S35-4431	624	6
	635	6
423-S62-3370	585	6
423-S62-3510	585	4
423-S62-4141	586	1
423-S62-4151	586	2
423-S62-4161	585	3
423-S62-4171	585	5
423-S62-4310	586	4
	586	13
423-S62-4330	605	1
423-S95-7170	513	4
423-S95-7510	510	8
423-S99-3120	455	2
423-S99-3142	455	1
423-S99-4110	455	5
423-T74-1110	827	1
423-T74-1120	827	6
423-T74-1130	827	7
423-V00-4110	863	
423-V00-4131	864	
423-V08-4111	858	
	861	
423-V08-4132	860	
423-V91-4130	620	1
	630	1
423-V91-4144	620	11
	630	11
423-V91-4160	622	21
	634	21
423-V91-4250	626	4
	637	4
423-V91-4271	626	1
	637	1
423-V91-4281	626	8
	637	8
423-V91-4290	638	38
423-V91-4311	622	1
423-V91-4332	621	1
	633	1
423-V91-4351	634	1
423-V91-4360	630	17
423-V91-4381	636	47
423-V91-4391	636	48
423-V91-4411	624	5
	635	5
423-V91-4421	624	31
	636	41
423-V91-4441	624	33
	636	43
423-V91-4551	621	8
	633	8
423-V91-4561	621	11
	633	11
423-V91-4610	635	7
424-01-11110	218	12
	223	12
424-01-11220	158	3
	158	5
	339	3
	339	5
424-03-41440	189	5
	212	5
424-06-14170	248	24
424-06-23220	258	16
	259	16
424-06-23230	258	17
	259	17
424-06-43151	258	1
	259	1
424-06-43160	252	4
424-06-43170	252	5
424-06-43211	258	15
	259	15
424-06-43221	258	20
	259	20
424-06-43231	235	1
	239	1
424-06-43241	235	2
	239	2
424-06-43310	235	
	239	
424-06-43320	235	
	239	
424-06-43330	235	
	239	
424-06-43340	235	
	239	
424-06-43350	673	1
424-06-44250	232	10
	233	10
	240	9
424-07-11360	608	4
424-09-H1840	508	12
424-15-12711	269	21
424-20-13520	267	20
424-22-27321	329	9
424-22-31200	327	
424-22-33250	312	24
	326	23
424-22-37110	329	1
424-22-37120	329	2
424-22-37210	329	6
424-22-37220	329	7
424-22-37310	329	8
424-22-37411	329	10
424-22-37451	329	11

PartNumber	Page	Index
424-22-37461	329	
424-30-11420	790	2
424-43-37100	424	36
424-43-37470	697	15
424-46-12191	502	8
424-46-12221	502	5
424-46-44320	492	8
424-54-14120	492	2
424-54-14220	605	11
	740	19
424-54-31823	178	6
	201	6
424-54-44411	764	1
424-54-44421	764	4
424-54-44790	769	25
424-54-44861	766	27
	767	30
	770	27
424-54-44951	766	28
	767	31
	770	28
424-54-44964	492	17
	769	1
424-54-44990	769	28
424-60-15150	343	3
424-62-31170	469	19
	471	19
	575	1
424-62-42240	437	1
424-62-42250	437	
424-62-44520	437	31
424-926-3261	540	16
424-926-3490	552	33
424-926-3531	538	4
424-926-3630	540	19
424-926-3890	544	12
424-928-3130	617	6
424-U12-4120	757	15
424-U12-4130	757	16
424-X26-1130	785	1
424-X26-1150	783	1
424-X26-1170	784	1
424-X27-1130	788	1
424-X27-1150	786	1
424-X27-1170	787	1
424-X31-1120	794	1
425-06-33650	525	24
425-07-24133	612	1
425-07-24143	613	1
425-07-31340	562	2
425-07-31350	562	4
425-13-32140	269	12
425-15-13320	298	2
425-15-14240	643	44
	650	44
	658	44
	666	44
425-15-23251	298	1
425-15-28710	298	14
	882	
	883	
	884	
425-30-11120	795	1
425-30-12120	781	2
	782	2
425-30-12130	781	3
	782	3
425-30-12140	781	5
	782	5
425-32-22670	297	32
425-32-22680	297	33
425-32-28720	297	34
425-43-31110	526	5
425-43-31141	623	12
	645	12

PartNumber	Page	Index
425-54-15250	544	5
425-54-31350	769	6
425-54-32571	692	33
425-56-21220	544	
425-62-23750	697	1
425-70-11290	362	6
	368	6
	371	6
	372	6
	387	6
	391	6
425-925-3160	598	1
425-925-3170	600	32
425-925-3210	538	5
425-925-3281	546	4
425-925-3360	544	9
425-925-3440	543	10
425-925-3551	540	27
425-925-3580	535	9
425-926-3751	551	8
425-926-3832	773	10
425-926-3842	773	11
425-926-3911	542	26
	600	23
425-926-3921	689	12
	690	6
425-926-3941	542	33
	600	30
425-93-41310	242	5
425-93-51110	549	2
	601	2
425-974-1161	322	2
425-S33-3181	522	1
425-S33-3192	523	27
425-S33-3231	522	16
425-S33-3240	522	30
425-S33-3250	522	20
425-S33-3260	522	23
425-S33-3272	523	15
425-S33-3280	522	26
425-S33-3290	523	8
425-S33-3311	522	10
	526	15
425-S33-3323	523	6
425-S33-3333	523	34
425-S33-3342	523	39
425-S33-3352	526	11
425-S33-3372	525	1
425-S33-3381	525	2
425-S33-3390	525	6
425-S33-3410	525	9
425-S33-3420	525	11
425-S33-3430	525	12
425-S33-3440	526	2
425-S33-3450	526	1
425-S33-3461	522	2
425-S33-3470	526	8
425-S33-3490	523	20
425-S33-3513	518	
	519	
	520	
425-S33-3534	523	9
425-S33-3563	525	14
425-S33-3571	525	17
425-S67-2152	614	1
425-S67-2162	615	1
425-S67-2180	612	
	613	
	614	
	615	
425-S96-H250	508	
425-W36-1130	780	3
425-W36-1140	780	4
425-X59-1110	798	1
425-X59-1120	796	1

PartNumber	Page	Index
425-X59-1130	797	1
425-X69-1110	799	1
425-X70-1110	802	1
425-X70-1210	801	1
426-06-11570	141	22
	300	19
426-06-31120	331	17
426-06-32791	689	13
426-06-33550	622	19
	634	19
426-06-36310	629	2
426-07-32441	562	13
	562	24
426-09-11210	243	9
426-15-15480	278	9
426-15-15490	278	7
426-15-15810	278	13
426-15-16261	278	12
426-40-32350	522	3
426-40-32360	522	19
426-40-32481	522	11
426-43-38250	522	34
426-43-38262	522	36
426-46-12280	775	9
	776	6
	777	5
426-56-21990	535	14
	562	14
	580	33
	766	17
	767	17
	770	17
426-56-31650	542	6
	600	3
426-56-31870	544	15
	550	8
	555	13
	563	7
	563	16
	590	25
	622	4
	622	12
	634	4
	634	12
	644	4
	644	12
426-56-31890	544	14
	550	7
	555	12
	563	8
	563	17
	590	24
	622	3
	622	11
	634	3
	634	11
	644	3
	644	11
426-56-32180	542	25
	600	22
426-57-21413	518	
	519	
426-57-31140	520	7
426-62-35620	444	26
	450	11
	457	26
	460	15
	697	29
426-925-3380	540	22
426-925-3890	551	3
	551	9
426-925-3930	544	10
426-925-3981	542	27
	600	24
426-925-3990	542	28

PartNumber	Page	Index
	600	25
426-926-4980	588	2
426-926-4990	588	1
426-93-21570	842	
	845	
	847	
	849	
	858	
	861	
426-93-43430	525	20
426-Z91-2170	586	10
427-03-10370	520	21
428-64-15110	393	6
428-S33-2752	520	1
428-S33-2760	520	2
428-T86-1650	766	30
	767	33
	770	30
42A-16-11210	586	7
42C-06-15121	369	13
42C-54-22330	565	2
560-43-15220	290	15
	294	12
	309	12
	578	24
561-06-61510	255	17
561-33-71860	276	21
561-43-43390	627	13
	638	15
	663	23
	670	23
561-86-69110	242	4
562-15-16110	278	8
562-15-29310	272	28
566-02-42200	743	1
566-30-11620	780	2
566-30-11640	781	4
	782	4
566-30-11660	783	2
	784	2
	785	2
	786	2
	787	2
	788	2
	791	2
	792	2
	793	2
	794	2
	795	2
	796	3
	797	3
	798	2
	799	2
	800	2
	801	2
	802	2
	803	7
	804	2
	805	7
	806	2
566-32-11620	318	6
	330	6
566-81-13240	780	5
567-13-11170	269	15
568-13-13351	269	5
569-06-61180	263	24
	576	1
	621	13
	633	13
	655	10
569-06-61960	263	27
	576	4
	655	13
	689	21
	690	27
569-06-61970	263	28
	576	5
	621	16
	633	16
569-15-51721	283	1
569-15-51732	283	
56B-06-15610	729	10
	730	10
	810	10
56B-15-16250	278	11
56B-15-16660	278	10
56B-15-19311	296	3
56B-22-11460	324	10
	338	9
56B-22-11770	324	11
	338	10
56B-22-17210	329	12
56B-22-17230	329	
56B-54-13340	542	34
	600	31
56B-88-12120	713	7
56B-88-12170	713	3
56B-88-12230	713	28
	713	31
56B-88-12480	713	30
	713	33
56D-15-12710	274	12
56D-15-19311	290	1
56D-15-35701	279	
	285	
56D-15-35800	289	
600-051-2050	135	6
	138	6
600-051-2060	160	32
	165	32
	300	16
600-051-2080	88	34
	141	19
	141	24
	141	30
600-051-2100	248	29
600-051-2140	140	44
	140	49
	141	3
	160	25
	164	25
	165	25
600-051-2160	248	30
	294	23
	300	17
	309	23
600-051-2180	139	33
	139	40
	141	7
	159	7
	159	19
	164	7
	164	19
	294	3
	309	3
600-051-2190	294	16
	300	18
	309	16
600-051-2200	139	27
	160	16
	165	16
	294	17
	309	17
600-051-2240	106	18
	159	16
	164	16
	257	11
600-051-2260	294	4
	309	4
600-051-2280	139	6
	139	15
600-051-6080	64	32
	71	32
	119	13
	121	9
600-051-6100	55	16
	56	15
	65	35
	72	35
600-051-6120	106	27
	106	33
	106	38
	107	42
600-051-6190	55	25
600-051-6220	64	9
	64	21
	71	9
	71	21
600-184-1350	95	6
600-184-1510	95	5
600-184-1570	95	4
600-185-5100	95	
600-185-5110	95	2
600-211-1340	98	6
600-211-1890	98	2
600-311-3220	109	2
600-311-3230	109	
	109	3
600-311-4500	106	
	109	
600-311-4510	109	
	109	1
600-319-3841	122	1
600-319-4500	109	
600-421-6630	124	5
600-461-1400	145	1
600-645-6110	94	1
600-645-6850	94	
600-645-7850	94	2
600-813-6632	133	
600-813-9322	136	
600-815-2170	251	18
	255	18
600-815-3812	50	13
600-815-8860	163	1
600-815-9240	88	26
600-825-5120	132	
600-825-5220	130	
6110-53-5910	65	26
	72	26
	87	7
	88	7
	108	15
	128	6
6110-73-6231	99	2
	100	2
	106	9
6112-23-6971	63	27
	70	27
6113-63-1630	729	13
	730	13
6113-63-1640	729	14
	730	14
6114-11-5590	55	3
6114-11-8910	82	12
6114-21-5190	74	2
6124-61-2181	98	13
6127-21-1260	81	10
6128-21-6730	61	14
	68	14
6128-21-6780	131	1
6130-12-8610	92	7
6130-32-1361	84	6
	85	6
6131-12-5920	63	17

PartNumber	Page	Index
	70	17
6131-21-6770	64	30
	71	30
6131-81-8820	345	21
6132-21-4630	65	21
	72	21
6134-11-5120	53	6
6136-21-7120	305	2
6136-21-7180	305	3
6136-21-7190	305	4
6136-42-4520	51	12
6140-61-6512	144	1
6141-55-5630	319	19
	337	24
6144-11-5630	139	5
	139	19
	140	47
	141	17
	142	41
6144-61-6510	126	29
	144	3
6150-11-1320	51	2
6150-11-1620	52	21
6150-11-5751	56	2
6150-11-8820	73	3
	73	8
6150-12-1370	51	4
6150-13-4810	50	7
6150-16-1320	51	
6150-17-1320	51	
6150-18-1320	51	
6150-19-1320	51	
6150-21-1170	86	21
6150-21-1180	87	9
	88	9
6150-21-1190	87	10
	88	10
	88	27
6150-21-1210	86	3
6150-21-1250	86	4
6150-21-1490	86	2
6150-21-1710	86	6
6150-21-2230	86	29
6150-21-2250	86	31
6150-21-2411	81	11
6150-21-2421	81	12
6150-21-2431	81	13
6150-21-2510	81	3
6150-21-3230	80	2
6150-21-3930	82	7
6150-21-4770	86	25
6150-21-5550	76	1
6150-21-5813	76	2
6150-21-5910	87	1
	88	1
6150-21-5920	76	10
6150-21-5930	76	11
6150-21-6391	92	6
6150-21-6510	92	
6150-21-6530	92	9
6150-21-6710	74	1
6150-21-8010	89	
6150-21-8050	89	6
6150-22-3360	79	9
6150-22-6110	87	11
	88	11
6150-22-6120	87	12
	88	12
6150-22-6430	92	1
6150-22-6490	124	2
6150-26-8010	89	
6150-26-8050	89	
6150-27-8010	89	
6150-27-8050	89	
6150-28-8010	89	
6150-28-8050	89	
6150-29-8010	89	
6150-29-8050	89	
6150-31-1130	89	3
6150-31-1341	83	2
6150-31-1810	84	5
	85	5
6150-31-3310	91	10
6150-31-6100	81	
6150-31-6120	81	2
6150-31-6220	81	8
6150-35-1120	89	2
6150-41-1012	77	
6150-41-1120	77	3
6150-41-1130	77	2
6150-41-2302	77	
6150-41-2401	77	
6150-41-2430	86	22
	86	26
6150-41-2440	86	23
6150-41-2450	77	13
6150-41-3111	77	14
6150-41-4430	51	11
6150-41-4510	51	10
6150-41-4570	51	14
6150-41-5400	78	
6150-41-5420	78	11
	78	16
6150-41-5541	78	12
	78	17
6150-41-5621	51	18
6150-41-5630	51	19
6150-42-4110	51	8
6150-42-4210	51	9
6150-42-5300	78	
6150-42-5600	51	
6150-42-5610	51	17
6150-51-1710	101	16
6150-51-1720	101	17
6150-51-6330	76	23
6150-51-6340	76	26
6150-61-1350	126	5
6150-61-1410	126	11
6150-61-1510	126	2
6150-61-1821	126	22
	126	25
6150-61-2125	102	2
6150-61-2141	102	11
6150-61-2151	102	12
6150-61-2510	102	3
6150-61-2520	102	4
6150-61-2530	102	6
6150-61-2540	102	10
6150-61-2550	102	15
6150-61-2580	102	5
6150-61-2815	102	16
6150-61-6911	127	42
6150-61-6920	127	40
6150-62-6510	126	20
6150-81-6920	55	14
6150-81-6940	294	24
	300	25
	309	24
6150-81-8420	77	11
6150-81-9130	79	8
6150-81-9370	73	4
	73	9
	78	22
6150-82-8610	131	10
6150-82-8650	131	7
6150-82-8690	131	11
6151-11-4410	50	29
6151-11-4840	161	1
6151-11-5110	53	1
6151-11-5280	56	10
6151-21-4161	82	6
6151-31-2410	91	2
6151-31-3050	91	12
6151-36-3050	91	
6151-37-3050	91	
6151-38-3050	91	
6151-39-3050	91	
6151-51-5490	55	10
6151-51-8151	55	19
6151-51-8490	106	37
	113	4
6151-61-1162	126	13
6151-61-1360	126	7
6151-62-1310	126	9
6151-62-2130	102	7
6151-62-2180	102	13
6152-12-4490	50	30
6152-15-5830	53	5
6152-32-6110	81	4
6152-51-5520	58	3
	93	3
	116	13
6152-62-2210	102	1
6154-21-1810	86	32
6154-21-1981	86	17
6154-21-2220	86	28
6154-31-6200	81	
6154-31-6310	81	6
6154-41-5321	78	21
6154-41-5500	78	
6154-51-5810	98	14
6154-51-8310	55	21
6154-61-1150	126	12
6154-81-6411	131	5
6155-31-1520	85	1
6155-31-1560	84	1
6155-31-8100	90	1
6156-21-6121	119	4
6156-31-4610	83	3
6156-71-1161	118	5
6156-71-5281	116	3
6156-71-5370	113	5
6156-71-5611	119	10
6156-71-9730	120	4
6156-81-7101	95	
6156-81-8990	345	26
6156-81-9110	118	11
6156-81-9130	118	13
6156-81-9150	118	15
6162-13-1150	51	5
6162-13-6440	124	6
6162-43-5340	78	15
6162-53-5430	98	4
6162-55-5230	98	3
6162-63-3910	64	8
	71	8
6162-73-5940	119	28
6162-75-5820	116	7
	116	22
6164-31-3330	52	22
6166-11-5391	88	33
6166-61-6341	61	1
	61	5
	68	1
	68	5
	125	8
6166-75-6810	65	13
	72	13
6166-75-6821	65	9
	65	23
	72	9
	72	23
	99	15
	100	15
6167-21-5910	107	41

PartNumber	Page	Index
6204-41-4510	59	10
	66	10
6204-41-4520	59	11
	66	11
6204-41-4541	59	12
	66	12
6206-21-6871	87	23
	88	23
6206-71-1770	345	23
6207-11-5390	63	9
	70	9
6207-21-5340	76	8
6210-11-1140	51	15
6210-21-1971	87	19
	88	19
6210-21-6471	92	5
6210-61-6441	124	8
6210-61-6551	64	16
	71	16
6211-11-9790	131	9
6211-61-1533	126	8
6212-65-8920	141	27
6215-11-5740	56	5
6215-11-5920	53	4
	63	29
	70	29
6215-11-6560	121	2
6215-71-6190	106	17
	141	34
6215-81-6150	131	13
6215-81-9520	65	15
	72	15
	87	4
	88	4
6216-84-9740	57	
	121	
6217-51-5103	98	
6217-51-5112	98	1
6217-51-5660	98	5
6217-71-1140	118	6
6217-71-1910	113	3
6217-71-5171	116	10
6217-71-5211	116	9
	116	18
6217-71-5261	119	24
6217-71-5281	116	15
6217-71-5761	119	25
6217-71-5770	120	
6217-71-5910	113	2
6217-71-6112	118	2
6217-71-6820	108	7
6217-71-6830	108	8
6217-71-6840	108	9
6217-71-6850	108	6
6217-71-6870	108	10
6217-71-9331	148	2
	149	2
	150	2
	151	2
	153	2
6217-71-9780	120	1
6217-71-9791	120	2
6218-81-8440	139	9
	139	14
	139	20
	139	26
	139	32
6218-81-8470	126	31
	135	9
	138	9
6218-81-8490	139	11
	139	18
	139	22
	139	23
	139	29
	139	36
	141	12
	141	16
	141	36
6219-71-1150	118	3
6219-71-1160	118	4
	872	6
6219-81-1961	87	17
	88	17
6219-81-1991	87	
	88	
6221-11-5910	56	4
6221-51-8160	55	5
6221-81-6810	135	1
	138	1
6221-81-6940	140	48
6240-61-1250	126	15
6245-81-5820	141	40
6251-11-1200	51	
6251-11-1380	51	3
6251-11-1810	51	20
6251-11-3200	118	1
6251-11-4110	50	1
6251-11-4140	50	28
6251-11-4150	50	31
6251-11-4220	61	4
	68	4
6251-11-4250	50	4
6251-11-4260	50	5
6251-11-4340	50	11
6251-11-4820	50	27
6251-11-4830	50	12
6251-11-5130	53	3
6251-11-5140	53	2
6251-11-5380	56	13
6251-11-5460	58	16
6251-11-5750	56	14
6251-11-5760	56	20
6251-11-5780	56	7
6251-11-5830	55	1
6251-11-5950	56	1
6251-11-6120	58	1
6251-11-6380	58	2
6251-11-6460	126	37
6251-11-6480	58	7
6251-11-6570	58	12
6251-11-6660	58	15
6251-11-7100	78	
6251-11-7110	78	1
6251-11-7210	50	19
6251-11-7220	78	5
6251-11-7300	78	
6251-11-7410	50	24
6251-11-7450	50	25
6251-11-8100	73	
6251-11-8110	73	1
6251-11-8150	73	6
6251-11-8200	73	
6251-11-8810	73	2
	73	7
	872	5
6251-11-8830	78	3
6251-11-8840	78	4
6251-11-9110	64	1
	71	1
6251-11-9130	63	21
	70	21
6251-11-9150	63	10
	70	10
6251-11-9170	63	22
	63	25
	70	22
	70	25
6251-11-9180	63	24
	70	24
6251-11-9210	63	16
	70	16
6251-11-9220	63	19
	70	19
6251-11-9320	63	5
	70	5
6251-11-9350	64	4
	71	4
6251-11-9360	88	38
6251-11-9720	50	22
6251-16-1380	51	
6251-17-1380	51	
6251-18-1380	51	
6251-19-1380	51	
6251-19-1810	51	
6251-21-1100	86	
6251-21-1970	87	18
	88	18
6251-21-2240	86	30
6251-21-3120	80	1
6251-21-3211	79	4
6251-21-3231	79	5
6251-21-3250	79	7
6251-21-3950	125	7
6251-21-4141	82	1
6251-21-5410	76	9
6251-21-5470	55	29
6251-21-5480	55	23
6251-21-5510	76	12
6251-21-6110	119	1
6251-21-6130	119	6
6251-21-6210	145	3
6251-21-6220	145	4
6251-21-6400	92	
6251-21-6410	124	1
6251-21-6450	92	2
	92	4
6251-21-6500	92	3
6251-21-6610	61	7
	68	7
6251-21-6800	92	
6251-21-7110	92	8
6251-21-7130	92	11
6251-31-2030	91	
6251-31-2510	91	1
6251-31-3100	91	
6251-31-3130	91	9
6251-31-4620	83	
6251-41-4450	51	13
6251-51-1001	101	
6251-51-5180	98	20
6251-51-5291	98	18
6251-51-5340	98	9
6251-51-5771	98	11
6251-51-5781	98	12
6251-51-6620	76	
6251-51-6630	76	4
6251-51-6640	76	5
6251-51-8250	55	4
6251-51-8410	65	20
	72	20
6251-51-8570	55	18
6251-51-9100	62	
	69	
6251-51-9220	65	28
	72	28
6251-51-9230	65	33
	72	33
6251-51-9310	65	3
	72	3
6251-51-9380	65	7
	72	7
6251-51-9391	65	11
	72	11
6251-51-9510	65	17

PartNumber	Page	Index
	72	17
6251-51-9810	65	30
	72	30
	121	12
6251-51-9850	55	8
	65	1
	65	29
	72	1
	72	29
6251-51-9880	55	7
	65	4
	65	31
	72	4
	72	31
6251-51-9890	55	9
	65	2
	65	16
	65	32
	72	2
	72	16
	72	32
	87	5
	88	5
6251-51-9910	121	13
6251-61-1102	126	
6251-61-1111	126	1
6251-61-1210	126	10
6251-61-1920	126	32
6251-61-2610	102	9
6251-61-3520	125	3
6251-61-3820	125	5
6251-61-6270	124	7
6251-61-6310	126	24
6251-61-7100	61	10
	68	10
6251-61-7150	61	13
	68	13
6251-61-7210	64	5
	71	5
6251-61-7220	64	13
	71	13
6251-61-7240	64	28
	71	28
6251-61-7250	64	15
	71	15
6251-61-7410	64	18
	71	18
6251-61-7620	64	23
	71	23
6251-61-7630	71	24
6251-61-7640	64	24
6251-61-8170	128	4
6251-61-8280	128	1
6251-71-1121	110	
	112	
6251-71-1170	78	7
6251-71-3230	117	1
6251-71-4112	116	1
6251-71-4122	116	2
6251-71-5112	119	16
6251-71-5122	119	17
6251-71-5132	119	18
6251-71-5142	119	19
6251-71-5152	119	20
6251-71-5162	119	21
6251-71-5210	119	27
6251-71-5220	119	32
6251-71-5230	119	30
6251-71-5240	119	22
6251-71-5340	118	8
6251-71-5450	116	24
6251-71-5490	121	1
6251-71-5520	99	7
	100	7
6251-71-5540	99	8
	100	8
6251-71-5660	121	6
6251-71-5810	116	20
6251-71-5820	116	12
6251-71-5830	116	5
6251-71-5840	119	37
6251-71-5850	119	38
6251-71-6210	99	13
	100	13
6251-71-6230	99	11
	100	11
6251-71-6300	99	
	100	
6251-71-6310	99	1
	100	1
6251-71-6710	106	23
6251-71-6720	106	24
6251-71-6730	106	1
6251-71-6740	108	1
6251-71-6750	106	25
6251-71-6761	106	3
6251-71-6770	106	31
6251-71-6780	108	3
6251-71-7100	106	
6251-71-7110	106	6
6251-71-9710	120	5
6251-81-4520	50	17
6251-81-7110	145	8
6251-81-7210	145	9
6251-81-8810	88	37
6251-81-9270	139	24
6251-81-9660	139	30
6251-81-9680	141	38
6251-81-9720	141	33
6251-81-9730	139	2
6251-81-9810	139	1
6251-81-9820	141	10
6251-81-9830	141	13
6251-81-9840	141	15
6251-81-9880	142	44
6251-81-9890	141	1
6251-81-9980	142	43
6252-31-1010	89	
6261-11-9520	63	6
	64	2
	70	6
	71	2
6261-41-4810	59	3
	66	3
6261-41-4820	59	4
	66	4
6261-41-4830	59	5
	66	5
6261-41-4840	59	6
	66	6
6261-41-4851	59	7
	66	7
6261-41-4900	59	
	66	
6261-41-4910	59	1
	66	1
6261-41-4920	59	2
	66	2
6261-41-4960	59	22
	66	22
6261-41-9530	59	
	66	
6261-41-9540	59	13
	66	13
6261-41-9550	59	30
	66	30
6261-41-9580	59	28
	66	28
6261-41-9590	60	39
	67	39
6261-41-9610	59	9
	66	9
6261-41-9620	59	29
	66	29
6261-41-9640	59	20
	66	20
6261-41-9650	59	8
	66	8
6261-41-9690	60	43
	67	43
6261-51-2140	62	15
	69	15
6261-51-9200	62	
	69	
6261-51-9230	62	13
	69	13
6261-51-9481	65	24
	72	24
	99	16
	100	16
6261-71-1220	114	1
6261-71-6660	119	34
6261-71-6670	119	35
6261-71-8100	108	
6261-71-8110	108	5
6261-71-8240	108	13
6261-81-2600	141	37
6261-81-2700	50	8
6261-81-2710	50	
6261-81-2720	50	
6261-81-2902	82	9
6261-81-6901	57	2
	121	8
6261-81-7330	145	11
6271-81-2980	152	2
	154	2
	155	2
	156	2
6306-21-4710	87	22
	88	22
6354-71-5560	64	27
	71	27
6501-11-1721	54	21
6505-11-0520	54	18
6505-99-9011	54	22
6506-21-2040	54	20
6506-21-4230	54	17
6506-21-5010	54	
6506-21-5920	54	
6553-51-2110	59	14
	66	14
6553-51-2820	59	15
	66	15
6553-51-3110	59	16
	66	16
6553-51-3511	59	17
	66	17
6553-81-7110	60	41
	67	41
6560-61-7300	50	10
6560-61-7310	50	
6631-11-5630	55	12
	56	9
	56	17
	64	3
	64	33
	71	3
	88	28
	119	7
	141	6
6643-11-4641	161	2
6672-12-6290	76	21
6685-11-5550	56	12
6693-22-5600	292	
6693-22-5620	292	20

PartNumber	Page	Index
6710-41-5340	78	20
6735-21-1930	50	
6741-81-9220	76	19
6754-71-5750	120	3
6933-21-6330	61	17
	64	29
	64	35
	68	17
	71	29
	71	34
6934-62-1360	126	17
6934-71-5860	58	5
6934-72-7190	118	9
6995-81-3260	231	1
700-11-31940	280	32
	281	27
	286	30
	287	27
	289	20
700-11-31980	283	18
	289	25
	308	7
700-22-11410	352	8
	366	35
	375	8
	389	35
700-80-64220	352	9
	375	9
700-93-11320	355	31
	355	33
	358	41
	358	44
	359	13
	365	20
	377	31
	378	33
	381	41
	381	44
	382	13
	385	19
	389	20
701-20-61230	363	24
	369	25
702-13-22911	421	2
702-13-22921	421	3
702-13-22931	421	4
702-16-01460	659	
702-16-02150	523	12
702-16-03370	631	
702-16-03461	619	1
702-16-06130	641	1
702-16-07022	566	1
702-16-51240	619	4
702-16-51270	659	8
702-16-53170	631	7
	659	7
702-16-53230	619	5
702-16-53470	659	6
702-16-53920	367	3
	390	3
	437	5
702-16-54550	631	4
702-16-54571	631	5
702-16-54580	631	9
	659	9
702-16-54590	631	10
	659	10
702-16-54610	631	11
702-16-54630	631	13
	659	13
702-16-54641	631	14
	641	2
	659	14
702-16-54650	631	17
	641	4
	659	17
702-16-54660	631	16
	659	16
702-16-54670	631	18
702-16-54750	659	5
702-16-54880	631	19
	659	19
702-16-54920	641	5
	659	18
702-16-56260	659	4
702-16-57430	631	8
702-16-58820	619	2
702-21-07610	365	30
	389	30
702-21-39450	366	36
	389	36
702-21-53140	367	15
	390	15
702-21-53330	365	33
	389	33
702-21-53680	365	31
	389	31
702-21-54180	171	26
	194	26
	401	4
	405	23
	407	23
702-21-54290	354	13
	377	13
702-21-54330	354	14
	377	14
702-21-55420	367	17
	390	17
702-21-55520	367	16
	390	16
702-21-55620	365	32
	389	32
	402	22
702-21-55640	367	7
	390	7
702-21-55870	171	18
	194	18
	401	2
	405	21
	407	21
702-21-55880	401	3
	405	22
	407	22
702-21-55890	401	5
	405	24
	407	24
702-21-56220	171	21
	194	21
702-21-56241	171	17
	194	17
702-21-57410	414	32
702-21-57700	401	1
	405	20
	407	20
705-17-01121	418	3
705-17-01351	418	
705-17-01610	418	4
705-17-01880	418	18
705-17-03220	417	2
705-17-03352	417	
705-17-03381	417	7
	418	15
705-17-03443	417	5
705-17-03473	417	6
705-17-03630	417	3
705-17-03640	417	4
705-17-03811	417	9
705-17-03870	417	8
705-17-04980	418	17
705-17-38010	417	11
705-17-38511	417	13
705-18-03580	417	1
705-18-30110	418	8
705-18-30750	418	9
705-18-30810	418	10
705-19-01330	418	14
705-19-01521	418	1
705-19-38720	417	12
705-29-03310	419	10
	419	18
705-33-30540	418	
705-33-38260	417	
705-40-01020	433	
705-40-24011	711	9
705-40-24330	711	10
705-40-24511	711	11
705-40-24F30	712	9
705-40-24H10	712	11
705-40-24L50	712	10
705-40-33011	433	8
705-40-33411	433	9
705-40-33511	433	10
705-40-80131	433	2
705-40-80230	433	1
705-40-80610	711	
705-40-80620	711	
705-40-80670	712	16
705-40-80760	433	4
705-40-80770	711	5
	712	3
705-40-80810	433	6
705-40-80820	711	7
705-40-80870	433	5
	711	6
705-40-80881	712	5
705-40-81820	712	7
705-40-81870	712	8
705-40-83630	712	
705-40-83640	712	
705-40-83720	433	3
	711	4
	712	2
705-40-83760	712	4
705-41-03620	711	
705-41-05680	712	
705-41-07210	711	
	712	
705-41-80210	711	1
705-41-80330	711	2
705-41-80610	433	
705-41-80620	433	
705-41-83510	712	1
705-51-30820	417	
	418	
705-67-01230	711	3
705-67-01330	712	15
705-67-01380	418	7
705-67-01440	418	5
705-67-01470	418	6
706-73-40890	404	2
706-73-42370	411	9
706-73-71450	365	10
	389	10
706-75-74850	353	4
	376	4
706-7G-71550	353	6
	376	6
706-88-40890	296	4
707-00-0G760	485	
707-00-0G770	486	
707-01-0K612	828	
707-01-0K622	830	
707-01-0K630	835	
707-01-0L890	838	
707-13-14910	828	1

PartNumber	Page	Index
707-13-14920	830	1
707-27-16950	835	8
707-27-18980	838	8
707-29-90651	485	9
	486	9
707-35-91020	695	5
	708	5
707-35-91420	828	13
	830	13
	885	
707-35-91640	835	16
	885	
707-35-91910	838	16
	885	
707-36-14650	828	16
	830	16
707-36-16580	835	22
707-36-18630	838	22
707-36-90260	485	18
	486	18
707-39-14110	828	18
	830	18
	885	
707-39-16120	835	24
	885	
707-39-18030	838	24
	885	
707-41-11840	828	15
	830	15
707-44-14150	828	17
	830	17
	885	
707-44-14910	828	19
	830	19
707-44-16190	835	23
	885	
707-44-16910	835	25
707-44-18150	838	23
	885	
707-44-18910	838	25
707-44-90150	485	19
	486	19
	885	
707-51-10030	835	11
	885	
707-51-10650	835	12
	885	
707-51-11030	838	11
	885	
707-51-11650	838	12
	885	
707-51-50030	485	12
	486	12
	885	
707-51-50640	485	13
	486	13
	885	
707-51-95030	828	8
	830	8
	885	
707-51-95650	828	9
	830	9
	885	
707-52-90251	485	14
	486	14
707-52-90721	828	10
	830	10
707-52-90781	835	13
707-52-90851	838	13
707-56-10740	835	9
	885	
707-56-11740	838	9
	885	
707-56-50740	485	10
	486	10
	885	
707-56-95740	828	6
	830	6
	885	
707-58-11970	838	2
707-58-50J50	485	3
	486	3
707-59-95070	828	2
	830	2
707-67-36010	485	21
	486	21
707-75-10160	835	14
707-75-11040	838	14
707-75-95030	828	11
	830	11
707-76-11030	828	3
	830	3
707-76-12030	835	5
	838	5
707-76-12110	835	3
	838	3
707-76-55120	485	6
	486	6
707-76-55520	485	4
	486	4
707-86-00560	828	23
707-86-00570	830	23
707-86-00580	828	24
707-86-00590	830	24
707-86-13660	835	29
707-86-13970	838	29
707-88-21321	828	26
	830	26
707-88-26280	838	17
707-88-27960	835	20
707-88-28560	835	21
707-88-33040	828	34
	830	34
	836	41
	839	41
707-88-33050	835	39
	838	39
707-88-45770	695	13
	708	13
707-88-50190	838	18
707-88-50820	828	25
707-88-50830	830	25
707-88-75310	835	17
707-88-75410	838	19
707-88-81480	695	14
	708	14
707-99-25710	885	K09
707-99-57330	885	K12
707-99-66360	885	K13
707-99-67680	885	K14
708-18-13230	397	3
708-1F-12270	396	24
708-1G-00060	396	
	397	
	398	
	399	
	400	
	401	
708-1G-01060	396	
	397	
	398	
	399	
708-1G-03130	399	
708-1G-03540	398	
708-1G-04310	396	
708-1G-04320	396	
708-1G-12160	396	21
708-1G-15270	398	14
708-1H-03310	400	
708-1L-29340	396	5
	411	11
	437	2
708-1S-00970	402	
	404	
	405	
	406	
	407	
	408	
	409	
	410	
708-1S-01970	402	
	404	
	405	
	406	
708-1S-03340	407	
708-1S-04440	402	
708-1S-04530	402	
708-1S-11890	173	9
	196	9
708-1S-12260	402	15
708-1S-12280	402	18
708-1S-12320	404	1
708-1S-12330	402	19
708-1S-12340	404	3
708-1S-12350	404	5
708-1S-13130	404	7
708-1S-13320	404	15
708-1S-13360	404	14
708-1S-13370	404	12
708-1S-13380	404	13
708-1S-13420	402	8
708-1S-13450	404	8
708-1S-13490	402	5
708-1S-14241	404	17
708-1S-15930	414	31
708-1S-18180	171	32
	194	32
708-1S-19710	408	3
708-1S-19930	409	1
708-1T-33432	402	10
708-1U-13310	413	10
708-1U-14240	413	13
708-1W-00771	411	
	413	
708-1W-01771	411	
	413	
708-1W-03020	414	
708-1W-03030	414	
708-1W-03920	416	
708-1W-04020	411	
708-1W-04320	416	11
708-1W-04580	416	10
708-1W-04590	416	
708-1W-05821	411	25
708-1W-41660	411	15
708-1W-42110	411	21
708-1W-42120	411	16
708-1W-42130	411	23
708-1W-42140	411	22
708-1W-42150	411	20
708-1W-43110	413	1
708-1W-43130	413	4
708-1W-43140	413	5
708-1W-43150	411	17
708-1W-43230	413	2
708-1W-43320	413	7
708-1W-43341	413	9
708-1W-43460	411	18
708-1W-44140	413	12
708-1W-44150	411	4
708-1W-44160	411	3
708-1W-44170	413	11
708-21-12541	59	18
	66	18
	171	22

PartNumber	Page	Index
	194	22
	359	28
	382	28
	437	3
708-21-12970	404	4
708-25-12380	421	5
708-2G-03590	398	
708-2G-03810	401	14
708-2G-04272	397	
708-2G-04290	397	
708-2G-05010	396	23
708-2G-12151	396	11
708-2G-12220	396	25
708-2G-12252	396	22
708-2G-13131	397	5
708-2G-13141	397	7
708-2G-13152	397	6
708-2G-13350	397	10
708-2G-13370	397	11
708-2G-13510	397	8
708-2G-14120	398	1
708-2G-14170	399	5
708-2G-14190	398	23
708-2G-14310	399	1
708-2G-15140	398	12
708-2G-15180	398	13
708-2G-15230	398	17
	399	3
708-2G-15290	398	11
708-2G-15310	398	22
	399	7
708-2G-15330	398	26
708-2G-15390	398	19
708-2G-15412	400	3
708-2G-15440	400	6
708-2G-15650	401	7
708-2H-23360	397	9
708-2L-23360	173	14
	196	14
708-2L-25480	171	25
	194	25
	396	18
	402	24
	408	1
	416	4
708-2L-25490	171	24
	194	24
	402	25
	408	2
708-2L-28540	400	4
708-2L-29460	171	31
	194	31
708-2L-29490	347	4
708-2L-35170	398	9
708-2L-35290	398	25
	399	4
708-2L-35341	400	8
708-2L-35351	400	9
708-2L-35360	400	5
708-2L-35410	400	7
708-2L-35530	367	13
	390	13
708-2L-35860	398	10
708-3S-13160	404	9
708-3S-13430	404	10
708-3S-14141	402	7
708-3S-14240	410	1
708-3S-14261	410	2
708-3S-14290	404	16
708-3T-11310	402	23
708-3T-13360	413	8
708-7R-11210	171	5
	194	5
708-7R-11220	279	2
	285	2
708-7S-00550	171	
	173	
	194	
	196	
708-7S-01430	171	
	194	
708-7S-01440	171	
	194	
708-7S-05110	173	7
	196	7
708-7S-11740	171	1
	194	1
708-7S-12140	173	5
	196	5
708-7S-12220	173	6
	196	6
708-7S-12330	173	4
	196	4
708-7S-13120	173	11
	196	11
708-7S-13260	173	12
	196	12
708-7S-13350	173	20
	196	20
708-7S-13360	173	19
	196	19
708-7S-13420	173	21
	196	21
708-7S-13530	173	15
	196	15
708-7S-13550	173	18
	196	18
708-7S-13560	173	16
	196	16
708-7S-18120	171	10
	194	10
708-7S-18230	171	28
	194	28
708-7S-18310	171	11
	194	11
708-7S-18320	171	12
	194	12
708-7S-18480	171	33
	194	33
708-7T-02281	171	36
	194	36
708-7T-05030	402	17
708-7T-12330	173	8
	196	8
708-8E-16150	187	4
	210	4
	278	2
	279	4
	279	30
	281	24
	283	13
	285	28
	287	24
	289	21
	293	37
	350	4
	359	18
	365	25
	373	4
	382	18
	389	25
	396	3
	396	19
	446	6
	458	6
	485	22
	486	22
708-8E-16160	411	5
	416	16
708-8E-16250	350	14
	350	18
	373	14
	373	18
708-8H-11530	351	24
	354	19
	355	38
	373	24
	377	19
	378	38
708-8H-32160	396	26
709-25-11390	356	2
	379	2
709-32-12861	171	7
	194	7
709-74-91510	353	12
	376	12
709-74-91860	350	16
	373	16
711-16-11560	269	29
	307	15
711-47-71000	307	
711-47-71010	269	
711-47-71121	307	9
711-47-71141	307	22
711-47-71151	269	3
711-47-71191	269	4
711-47-71211	307	20
711-47-71250	307	21
711-47-71271	269	32
711-47-71411	269	6
711-47-71431	269	14
711-47-71530	307	11
711-47-71551	307	6
711-47-71571	269	16
711-47-72111	307	14
711-47-72120	269	10
711-47-72520	307	3
711-47-72550	269	1
711-47-77112	269	23
711-47-77211	269	20
711-47-77230	269	25
711-49-14230	298	25
711-53-11770	269	30
	307	16
711-73-22540	269	11
714-01-11380	275	30
714-07-00310	277	34
	882	
	883	
	884	
714-07-00320	277	36
	882	
	883	
	884	
714-07-00330	296	11
	882	
	883	
	884	
714-07-05130	883	K04
714-07-05131	884	K05
714-07-05140	884	K06
714-07-05150	882	K01
714-07-05151	882	K02
714-07-05160	883	K03
714-07-12680	270	6
	272	6
714-07-12691	270	7
	272	7
714-07-12711	270	8
	272	8
714-07-12720	270	9
	272	9
714-07-18541	298	15
	882	
	883	

PartNumber	Page	Index
	884	
714-07-19320	270	11
	272	11
	882	
	883	
	884	
714-07-27151	296	24
714-07-27161	296	23
714-07-28713	290	
	872	1
714-07-29350	270	17
714-07-35180	279	6
	285	4
714-07-38130	292	13
714-07-39120	298	13
	882	
	883	
	884	
714-07-40001	270	
	272	
	274	
	276	
	278	
	279	
	281	
	283	
	284	
	285	
	287	
	290	
	292	
	296	
	298	
	307	
	308	
	309	
	310	
714-07-40011	269	
	270	
	272	
	274	
	276	
	278	
	279	
	281	
	283	
	284	
	285	
	287	
	289	
	290	
	292	
	294	
	295	
	296	
	298	
714-07-42010	270	
714-07-42020	272	
714-07-42030	274	
714-07-42111	270	1
714-07-42121	272	1
714-07-42131	274	1
714-07-42252	310	1
714-07-42262	295	1
714-07-42281	296	1
714-07-42411	271	32
	273	30
714-07-42431	273	31
714-07-42441	275	39
714-07-42451	275	40
714-07-42511	295	4
	310	3
714-07-42591	274	2
714-07-42611	270	19
	272	19

PartNumber	Page	Index
714-07-42621	270	16
	272	16
714-07-42631	274	25
714-07-42650	270	2
	272	2
714-07-42660	296	25
714-07-42712	271	33
714-07-43211	295	18
	310	16
714-07-43223	295	26
	310	24
714-07-43231	296	2
714-07-43323	295	27
	310	25
714-07-43342	273	32
714-07-43411	298	27
714-07-43421	298	28
714-07-43811	298	7
714-07-43822	298	8
714-07-43831	296	8
714-07-44152	298	21
714-07-44160	298	22
714-07-44201	298	6
714-07-44310	277	
714-07-44320	277	
714-07-44330	277	
714-07-44410	277	
714-07-44420	277	
714-07-44430	277	
714-07-44510	296	
714-07-44520	296	
714-07-44530	296	
714-07-44911	276	25
714-07-45100	279	
	281	
	283	
714-07-45112	279	1
714-07-45121	285	1
714-07-45160	308	2
714-07-45200	285	
	287	
	308	
714-07-45240	283	11
714-07-45300	285	
	287	
	289	
714-07-45812	309	1
714-07-45823	294	1
714-07-45851	294	18
	309	18
714-07-46111	270	15
	272	15
714-07-46122	295	8
	310	7
714-07-46151	274	20
714-07-46161	274	21
714-07-46171	274	22
714-07-46180	275	36
714-07-46211	296	5
714-07-46240	270	13
	272	13
	275	37
714-07-46250	274	23
714-07-46260	275	38
714-07-46270	274	24
714-07-46310	295	28
	310	26
714-07-46320	295	24
	310	22
714-07-47112	296	12
714-07-47121	296	13
714-07-47131	296	14
714-07-47141	296	7
714-07-47210	276	28
714-07-47220	277	39

PartNumber	Page	Index
714-07-47231	277	35
714-07-47250	297	35
714-07-47340	300	8
714-07-47713	295	5
	310	4
714-07-47721	274	3
714-07-48113	276	1
714-07-48123	276	4
714-07-48131	276	7
714-07-48281	275	29
714-07-48411	292	9
714-07-48511	290	7
714-07-48521	290	18
714-07-48530	290	24
714-07-48540	292	1
714-07-48550	293	32
714-07-48581	291	35
714-07-48701	290	3
714-07-49210	270	25
	272	25
	882	
	883	
	884	
714-07-49220	270	26
	272	26
	882	
	883	
	884	
714-07-49410	295	11
	310	10
714-07-49420	295	12
	310	11
714-07-49460	274	19
714-07-49470	272	17
	275	41
714-07-49510	275	42
714-07-49610	295	19
	310	17
714-07-49620	273	35
714-07-49640	295	10
	310	9
714-07-49650	271	30
714-07-49661	295	31
	310	29
714-07-49670	295	20
	310	18
714-07-49731	270	5
	272	5
714-07-49741	274	26
714-07-49751	274	27
714-07-49810	270	29
714-08-12610	270	23
	272	23
714-08-12911	270	22
	272	22
714-08-19210	275	32
	882	
	883	
	884	
714-08-19230	270	10
	272	10
	882	
	883	
	884	
714-08-19510	270	24
	272	24
714-08-19710	270	20
	272	20
714-08-19730	270	21
	272	21
714-10-12811	275	28
714-10-16890	283	9
714-10-19220	275	31
	882	
	883	

PartNumber	Page	Index
	884	
714-11-12710	271	31
714-11-19510	270	28
714-12-12610	274	13
714-12-19711	274	10
714-12-25220	283	12
714-12-32960	276	20
714-12-38400	292	28
714-12-38410	292	
714-12-38420	292	
714-12-38430	292	
714-12-38440	292	
714-12-38550	293	29
714-12-38760	294	5
	309	5
714-12-39210	274	8
	295	13
	310	12
	882	
	883	
	884	
714-12-39230	295	15
	295	16
	310	13
	310	14
	882	
	883	
	884	
714-12-39360	295	30
	310	28
714-13-11350	276	31
714-16-12660	274	9
714-16-19210	274	16
	882	
	883	
	884	
714-16-19230	274	15
	882	
	883	
	884	
714-16-19730	274	11
714-21-19810	295	14
	882	
	883	
714-23-15690	279	27
	281	22
	285	25
	287	22
714-23-19410	270	14
	272	14
714-23-19420	275	35
714-24-25190	276	13
714-24-26230	278	6
720-2M-11550	276	15
720-68-19530	447	9
720-68-19610	173	13
	196	13
	402	16
	413	3
721-10-10320	695	1
	708	1
721-11-90750	485	1
721-11-90760	486	1
721-13-16190	835	1
721-13-18090	838	1
721-26-10050	695	7
	708	7
721-27-14050	828	5
	830	5
721-29-10090	695	4
	708	4
721-32-08190	695	
	708	
721-32-10281	695	
	708	

PartNumber	Page	Index
721-36-10030	695	9
	708	9
721-47-12020	695	11
721-47-12021	708	11
721-47-12080	695	10
	708	10
721-58-10170	835	2
721-89-10054	695	2
	708	2
721-89-10100	695	3
	708	3
721-89-12011	695	12
	708	12
722-10-91130	171	6
	194	6
722-12-19070	350	8
	355	26
	358	35
	360	37
	367	28
	373	8
	377	26
	381	35
	382	37
	390	28
723-11-15110	276	14
723-11-18190	276	2
	276	12
	277	42
	367	19
	390	19
723-11-19110	353	8
	367	21
	376	8
	390	21
723-11-19130	350	13
	354	22
	358	31
	359	33
	367	24
	373	13
	377	22
	380	31
	382	33
	385	12
	390	24
723-11-19960	365	12
	389	12
723-26-15830	358	36
	381	36
723-40-57300	352	1
	375	1
723-40-66300	361	
	384	
	386	
723-40-82220	355	41
	378	41
723-40-91200	356	1
	379	1
723-40-93400	367	
	390	
723-40-93500	367	2
	390	2
723-40-93900	352	7
	375	7
723-43-13400	350	
	352	
	353	
	354	
	356	
	357	
	361	
	365	
	367	
723-43-13500	350	

PartNumber	Page	Index
	352	
	353	
	354	
	356	
	357	
	359	
	361	
723-44-13400	373	
	375	
	376	
	377	
	379	
	380	
	384	
	385	
	386	
	389	
	390	
723-44-13500	373	
	375	
	376	
	377	
	379	
	380	
	382	
	384	
	385	
	386	
723-46-00931	350	
	373	
723-46-00940	350	
	373	
723-46-11940	353	1
	376	1
723-46-14110	385	7
723-46-14370	357	18
	380	18
723-46-14381	365	6
	389	6
723-46-14410	354	5
	357	11
	377	5
	380	11
723-46-14420	354	4
	377	4
723-46-14430	357	14
	380	14
723-46-15111	385	8
723-46-15120	354	3
	377	3
	385	6
723-46-15130	357	3
	380	3
	385	3
723-46-15380	365	5
	389	5
723-46-15390	365	3
	389	3
723-46-15480	351	26
723-46-15490	373	26
723-46-15720	351	28
	373	28
723-46-16520	350	9
	355	24
	358	33
	360	36
	367	27
	373	9
	377	24
	381	33
	382	36
	385	14
	390	27
723-46-16690	357	13
	380	13

PartNumber	Page	Index
723-46-16710	357	17
	380	17
723-46-16720	365	4
	389	4
723-46-16731	359	10
	365	17
	382	10
	389	17
723-46-16741	359	11
	365	18
	382	11
	389	18
723-46-16750	359	17
	365	24
	382	17
	389	24
723-46-16780	416	15
723-46-16860	357	12
	380	12
723-46-16890	357	15
	380	15
723-46-16910	357	9
	380	9
723-46-16920	357	8
	380	8
723-46-16930	357	10
	380	10
723-46-16940	357	4
	380	4
723-46-16950	357	7
	380	7
723-46-16960	360	39
	367	30
	383	39
	390	30
723-46-16970	359	6
	382	6
723-46-16980	359	27
	382	27
723-46-16990	359	24
	382	24
723-46-17350	354	11
	357	23
	377	11
	380	23
723-46-17510	350	10
	355	25
	358	34
	359	35
	367	26
	373	10
	377	25
	381	34
	382	35
	385	15
	390	26
723-46-17520	350	12
	354	23
	358	32
	359	34
	367	25
	373	12
	377	23
	380	32
	382	34
	385	13
	390	25
723-46-17530	350	11
	354	21
	358	30
	360	38
	367	18
	367	29
	373	11
	377	21
	380	30
	382	38
	385	11
	390	18
	390	29
723-46-17550	355	40
	378	40
723-46-17600	350	20
	373	20
723-46-17840	365	7
	389	7
723-46-17940	359	3
	382	3
723-46-18710	367	22
	390	22
723-46-18720	353	9
	376	9
723-46-40100	358	43
	381	43
723-46-40500	385	18
723-46-41210	358	47
	381	47
723-46-41950	355	30
	355	34
	358	40
	358	45
	359	14
	365	21
	377	30
	378	34
	381	40
	381	45
	382	14
	385	20
	389	21
723-46-43400	355	32
	377	32
723-46-43971	355	27
	358	37
	377	27
	381	37
723-46-43980	355	28
	358	38
	377	28
	381	38
723-46-44920	355	29
	358	39
	377	29
	381	39
723-50-61440	367	10
	390	10
723-56-31610	367	8
	390	8
723-56-31620	367	9
	390	9
723-56-31630	405	10
	407	10
723-60-22230	352	5
	375	5
	409	2
723-60-27500	437	4
723-90-65300	385	24
723-90-65400	356	3
	379	3
723-90-65500	353	10
	376	10
729-11-11180	59	35
	66	35
729-12-11001	59	
	66	
729-12-11100	59	33
	66	33
729-12-11700	59	34
	66	34
7815-11-1010	568	22
7823-30-9214	583	1
7823-33-3001	672	1
7823-36-3009	576	20
7826-20-7038	689	16
7826-25-5302	690	22
7861-91-4220	76	
7861-93-1653	364	34
	370	35
	421	25
7861-93-2330	174	39
	197	39
	300	6
7861-93-3320	300	5
	451	7
	456	8
7861-93-4832	221	7
	226	7
799-101-5220	174	10
	197	10
	300	28
	699	10
815-02-10110	314	25
	326	25
8236-71-2450	523	22
8240-54-5450	754	6
	754	16
8A13-10-2100	689	4
AN51104-10850	559	
AN51104-10860	594	
AN51141-10430	591	6
AN51141-10431	556	2
AN51150-12590	591	7
AN51150-12602	556	4
AN51150-12680	591	8
AN51150-12720	556	3
AN51151-47700	557	38
AN51153-40392	559	1
AN51153-40491	559	5
	594	5
AN51153-40501	559	6
	594	6
AN51153-40511	594	2
AN51153-40581	559	2
AN51153-40680	594	1
AN51159-41840	556	5
AN51159-41850	591	9
AN51170-12311	594	
AN51170-43791	559	21
	594	21
AN51170-43801	559	22
	594	22
AN51184-40820	556	6
	591	10
AN51191-58720	556	7
	591	11
AN51191-58750	559	7
	594	7
AN51191-58760	559	8
	594	8
AN51191-58830	556	8
AN51191-59410	556	9
	591	12
AN51191-59460	559	12
	559	23
	594	12
	594	23
AN51191-59601	591	13
AN51191-59710	591	14
AN51191-59720	591	15
AN51191-59730	591	16
AN51191-59740	591	17
AN51191-59750	591	18
AN51191-62020	559	9
	594	9
AN51191-62030	559	10

PartNumber	Page	Index
	594	10
AN51191-62040	559	11
	594	11
AN51194-53570	559	24
	594	24
AN51194-53580	559	25
	594	25
AN51194-53610	559	13
	594	13
AN51240-12310	559	14
	594	14
AN51240-43460	559	15
	594	15
AN51243-41500	556	10
	591	19
AN51259-41750	556	11
	560	33
	591	20
AN51259-41780	594	26
	595	37
AN51260-40670	591	21
AN51420-43340	559	16
	559	26
	594	16
	594	27
AN51436-10320	557	37
	591	23
AN51436-D0580	556	13
	591	22
AN51439-D0031	183	
	206	
	585	
	607	
AN51439-D0041	556	26
	592	48
	606	
AN51439-D0051	556	27
	585	
	592	49
	607	
AN51500-11150	559	3
	594	3
AN51502-15130	556	12
	591	24
AN51502-40220	559	27
	594	28
AN51515-A0490	556	14
	591	25
AN51532-10870	594	29
AN51532-41240	556	15
	591	26
AN51532-41250	594	30
AN51550-18780	556	16
AN51550-18790	559	17
AN51550-18860	591	27
AN51550-18870	594	17
AN51571-43580	556	17
	591	28
AN51571-43590	556	18
	591	29
AN51571-43611	559	28
	594	31
AN51571-43840	591	30
AN51571-43850	591	31
AN51571-43860	591	32
AN51571-43870	591	33
AN51571-43880	591	34
AN51571-43890	591	35
AN51571-43900	591	36
AN51571-43910	592	37
AN51571-44120	556	19
	592	38
AN51571-44320	556	20
	592	39
AN51571-44330	556	21
	592	40
AN51571-44570	592	41
AN51573-11552	556	22
	592	42
AN51573-11562	556	23
	592	43
AN51573-11570	559	29
	594	32
AN51573-11660	592	44
AN51573-11670	592	45
AN51580-41010	556	24
	592	46
AN51581-42250	556	30
AN51700-A0380	556	25
	592	47
AN51719-40030	592	50
AN51851-42250	592	51
AN51852-40770	556	31
	560	34
	592	52
	594	33
	595	38
AN51852-40780	592	53
AN51853-41521	556	32
	559	30
	592	54
	595	34
AN51870-40040	556	33
	559	18
	592	55
	594	18
AN51870-40910	556	34
	592	56
AN51871-40280	556	35
AN51871-80010	592	57
AN51872-40350	592	58
AN51873-40250	557	36
	592	59
ANBF00640DPA	559	19
	594	19
ANKN-0425BA8	591	1
ANKT+0410BA1	557	39
ANTB105160T1	556	28
ANTB105160TA	559	4
	559	20
	559	31
	560	35
	594	4
	594	20
	595	35
	595	39
ANTB105160TI	591	2
ANTKS-B210A0	556	1
	591	3
ANTN104300T1	556	29
	591	4
ANTN104300TA	559	32
	595	36
ANWPA04000G1	591	5
AS156717	516	12
AS156737	516	11
AS156738	516	17
AS156790	516	19
AS157130	516	5
AS157144	516	2
AS157146	516	3
AS157154	516	4
AS157157	516	7
AS157230	516	9
AS161796	516	15
AS162056	516	6
AS163577	516	20
AS165216	516	18
AS166568	516	10
AS177125+182	516	
AS182428	516	1
AS189098	516	13
AS197031	516	16
AS198244	516	8
AS202011	516	14
GJ1023155	518	14
GJ1023156	518	15
GJ1076975	519	3
GJ1077152	519	6
GJ1077153	519	7
GJ1078590	519	5
GJ1079174	519	19
GJ1081315	519	11
GJ1088777	518	28
GJ1088780	518	13
GJ1088782	518	12
GJ1089165	519	16
GJ1090447	519	13
GJ1090779	519	14
GJ1091082	518	6
GJ1091158	518	10
GJ1091191	518	11
GJ1091214	518	27
GJ1091285	518	16
GJ1091299	518	17
GJ1091389	518	20
GJ1091397	518	19
GJ1091428	518	24
GJ1091471	518	29
GJ1091503	518	22
GJ1096565	519	15
GJ1096588	519	17
GJ1096687	519	12
GJ1138023	519	10
GJ1150900	519	4
GJ1150902	519	18
GJ1163323	519	2
GJ1166395	519	1
GJ131834	519	8
GJ136951	518	4
GJ138628	519	9
GJ139246	518	23
GJ139254	518	25
GJ139257	518	21
GJ139521	518	26
GJ140678B	518	5
GJ140679	518	7
GJ140694	518	9
GJ140988	518	2
GJ142259	518	18
GJ142733	518	3
GJ2046567	518	8
GJ2046570	519	20
GJ2048193	518	1
KB21001-00213	392	6
	885	
KB21001-01445	392	5
KB21001-90440	392	34
KB21011-30644	392	11
KB21111-52152	392	10
KB92703-10451	392	16
KB92703-10701	392	33
KB95111-01000	392	21
	885	
KB95111-01090	392	30
	885	
KB95111-01200	392	28
	885	
KB95111-02200	392	7
	885	
KB95121-04000	392	17
	885	
KB95712-01090	392	31
	885	
KB95712-02200	392	8

PartNumber	Page	Index
	885	
KBC0001-52003	392	15
KBT1155-31301	392	4
KBT1461-14007	392	9
KBT1461-34003	392	14
KBT1515-30001	392	32
	885	
KD0-0020-05062	136	39
KD0-0055-05082	134	48
	136	37
KD0-0080-08202	431	19
KD0-0270-06202	136	15
KD0-0270-06402	134	43
KD0-0270-06602	137	43
KD0-0274-06202	133	17
KD0-0275-06802	130	12
	132	12
KD0-0276-08402	136	32
KD0-0280-16022	130	17
	132	17
KD0-09001-4380	136	30
KD0-09001-4460	431	18
KD0-09001-4580	133	30
KD0-09006-0660	134	49
	137	47
KD0-09006-0670	134	50
	137	48
KD0-09011-3140	136	27
	431	20
KD0-09057-0110	136	33
	431	23
KD0-09057-0190	136	38
KD0-09170-2501	130	21
	132	21
KD0-09201-0850	136	12
KD0-09201-0881	130	7
	132	7
KD0-09201-0980	130	4
	132	4
KD0-09271-3620	133	22
	136	21
KD0-09271-3760	431	30
KD0-09275-1430	134	52
	137	50
KD0-23100-0251	133	20
KD0-23100-0261	431	1
KD0-23100-0430	136	18
KD0-23120-0180	136	8
KD0-23200-0331	133	23
KD0-23200-0671	136	20
KD0-23303-0020	136	5
KD0-23310-0860	133	6
KD0-23310-1670	136	9
KD0-23320-0220	133	9
KD0-23500-0410	136	13
KD0-23511-1101	136	14
KD0-23600-0430	133	12
KD0-23611-0690	133	13
KD0-23611-0720	431	5
KD0-23700-0130	133	32
KD0-23710-0221	136	29
KD0-23711-0424	431	6
KD0-23740-0250	133	26
KD0-23740-0351	136	23
	431	8
KD0-23750-0250	133	27
KD0-23750-0490	136	24
	431	7
KD0-23901-0170	134	40
KD0-23904-0070	133	1
KD0-23921-0230	133	15
KD0-23927-0071	133	2
KD0-23951-0301	133	8
KD0-23951-0331	133	11
KD0-25000-8332	134	47

PartNumber	Page	Index
	137	42
KD0-35100-0300	130	1
	132	1
KD0-35120-0230	130	18
	132	18
KD0-35200-0440	130	5
	132	5
KD0-35300-0190	130	6
	132	6
KD0-35411-0590	132	13
KD0-35411-0750	130	13
KD0-35421-0170	130	14
	132	14
KD0-35700-0821	130	
	132	
KD0-35710-1010	130	19
	132	19
KD0-35719-0201	130	29
	132	29
KD0-35730-0510	130	20
	132	20
KD0-35761-0250	130	30
	132	30
KD0-35784-0210	130	27
	132	27
KD0-35784-0290	130	28
	132	28
KD0-35923-0130	130	26
	132	26
KD0-35923-0160	130	3
	132	3
KD0-35926-0070	130	8
	132	8
KD0-35926-0090	130	10
	132	10
KD0-35943-0140	130	22
	132	22
KD0-35943-0150	130	23
	132	23
KD0-35943-0160	130	24
	132	24
KD0-35943-0170	130	25
	132	25
KD0-35951-0060	130	9
	132	9
KD0-47100-4651	136	19
KD0-47100-4800	133	21
KD0-47761-2671	134	46
	137	45
KD0-47761-2681	134	45
	136	25
KD0-47761-2691	133	24
	136	26
KD0-47927-1390	137	44
KD0-51111-1340	431	3
KD0-51200-2820	431	2
KD0-51311-2030	431	4
KD0-51921-0430	431	21
KD1-0240-06305	133	33
	137	41
KD1-0240-08405	133	37
	431	17
KD1-0240-08655	431	16
KD1-0330-06012	134	42
KD1-0330-08012	431	28
KD1-0330-08022	133	39
	136	3
	431	27
KD1-0330-16012	130	15
	132	15
KD1-0335-06002	134	41
KD1-0335-08002	133	38
	136	2
	431	26
KD1-0335-16002	130	16

PartNumber	Page	Index
	132	16
KD1-0345-05001	137	40
KD1-0345-08001	136	4
KD1-0400-20100	133	19
KD1-0400-30100	136	17
	431	29
KD1-0454-60054	431	9
KD1-0454-60064	431	10
KD1-0454-62007	133	31
KD1-0454-62047	133	16
KD1-0454-62054	431	11
KD1-0456-60067	133	10
KD1-0456-62004	431	12
KD1-0505-00601	133	28
KD1-09211-0081	136	28
	431	15
KD1-09211-0980	133	14
KD1-09211-0981	137	46
KD1-09211-1120	136	22
	431	14
KD1-09257-0050	134	51
	137	49
KD1-09279-0090	136	1
KD1-23111-0160	133	5
KD1-23181-0020	133	4
	136	7
KD1-23320-0290	136	11
KD1-23500-0170	133	7
KD1-23500-0970	136	10
KD1-23913-0040	133	25
KD1-23914-0020	133	3
	136	6
KD1-23921-0130	133	34
	136	36
KD1-23921-0140	133	35
	136	35
	431	22
KD1-23941-0040	133	36
	136	34
	431	25
KD1-23951-0020	133	18
KD1-23951-0050	431	13
KD1-23951-0051	136	16
KD1-33923-0790	130	2
	132	2
KD1-33926-0730	130	11
	132	11
KD1-47921-0790	133	29
	136	31
	431	24
KD1-47927-1250	134	44
ND090207-0100	111	34
ND090222-0070	111	28
	112	19
ND090222-0120	111	30
ND090244-0010	111	35
ND090310-0490	112	20
ND090310-0500	110	27
ND090317-0060	112	16
ND090317-0480	111	33
ND092121-0011	112	12
ND092124-0010	112	11
ND092125-0010	112	15
ND092126-0010	112	13
ND092130-0360	112	14
ND092220-0040	112	21
ND092223-0042	112	22
ND094040-0370	110	2
ND094082-0040	112	7
ND094086-0090	110	3
ND094086-0100	110	5
ND094086-0110	110	20
ND094086-0120	110	16
ND094086-0130	110	21
ND094086-0200	112	8

PartNumber	Page	Index
ND094086-0210	111	37
ND094087-0050	112	9
ND094092-0010	110	18
ND094093-0050	110	22
ND094093-0060	110	
ND094093-0070	110	
ND094093-0080	110	
ND094095-0100	110	17
ND094095-0130	110	
ND094095-0140	110	
ND094095-0150	110	
ND094095-0160	110	
ND094096-0050	110	24
ND094096-0060	110	
ND094096-0070	110	
ND094096-0080	110	
ND094100-0460	110	
ND094104-0100	110	14
ND094110-0210	110	1
ND094140-0040	110	4
ND094162-0040	110	8
ND094164-0010	110	9
ND094165-0021	110	10
ND094170-0100	110	11
ND094191-0161	110	12
ND094200-0390	112	
ND094205-0060	112	10
ND094210-0070	112	1
ND094230-0080	112	3
ND094231-0060	112	2
ND094241-0040	112	4
ND094244-0040	112	5
ND094251-0050	112	6
ND095400-0310	114	2
ND095420-0440	114	3
ND095438-0090	114	6
ND095444-0020	114	5
ND096449-0070	112	24
ND499000-6160	114	4
ND857056-1540	544	
ND857059-0020	544	
ND857199-0320	544	
ND90107-06161	110	26
ND90200-06081	110	25
ND92156-08081	110	7
ND949010-2530	114	7
ND949010-3020	111	36
ND949013-5880	110	6
ND949018-0350	111	32
ND949018-1500	112	17
ND949044-3320	110	19
	112	18
	112	23
ND949101-0230	110	13
ND949140-6310	110	
ND949150-3030	110	15
ND949180-0060	111	31
ND949180-0310	111	29
ND949979-1300	110	23
NY06339-10200	626	13
	637	13
NY07493-10200	626	14
	637	14
NY08000-02200	626	12
	637	12
NY09000-11400	626	15
	637	15
NY81446-05010	626	17
	637	17
NY84110-00264	626	16
	637	16
PML136-02800	101	12
PML137-05901	62	16
	69	16
PML137-06010	101	13
PML139-01300	101	14
PML139-01700	62	18
	69	18
PML152-07801	62	
	69	
PML160-12400	62	
	69	
PML199-00210	62	14
	69	14
REU419B-418-C	547	15
RFU419B-418-A	547	1
RFU419B-418-B	547	6
RFU419B-418-C	547	7
RFU419B-418-D	547	3
RFU419B-418-E	547	4
RFU419B-418-F	547	16

WA470-6 Wheel Loader
Form No. FEN02985-00

©2014 KOMATSU
All Rights Reserved
Printed in Japan 07-14