RUTHZIL TRATOR COMERCIAL DE PEÇAS LTDA 11 97083-6812 ROLANDO CITRANGULO

PIN:XUGC2570JRCA00784

XC870K BACKHOE LOADER PARTS CATALOGUE

XC870K

XCMG Construction Machinery Co.,Ltd

Table of Contents

C2570AS 2
402216156 C2570AS 2

LOADING WORKING DEVICE 4
402209611 LOADING WORKING DEVICE 4
402207955 LEFT PULL ROD ASSEMBLY 6
402208002 RIGHT PULL ROD ASSEMBLY 8
402208005 SAFETY BAR 10
402209610 BOOM AND CONNECTING ROD ASSEMBLY 12
402208009 BUCKET LINK BAR 14
402208016 BUCKET ASSEMBLY 16

DRIVE SHAFT 18
402216353 DRIVE SHAFT 18
402216354 TUBE 20
402216355 TRANSMISSION ASSY 22
402215172 OIL FILLING PIPE 24
272103520 TRANSMISSION 26
402215011 PRESSURE GAUGE ADAPTOR ASSY 60
402216357 FRONT AXLE ASSY 62
275000409 FRONT AXLE ASSY 64
402216254 SHAFT TRANSMISSION 80
402216356 REAR AXLE ASSY 82
275000410 REAR ALXE ASSY 84

BRAKE HYDRAULIC SYSTEM 100
402210694 BRAKE HYDRAULIC SYSTEM 100

STEERING HYDRAULIC SYSTEM 102
402208162 STEERING HYDRAULIC SYSTEM 102

PARKING BRAKE SYSTEM 104
402207763 PARKING BRAKE SYSTEM 104

AIR CONDITIONING SYSTEM 106
402216335 AIR CONDITIONING SYSTEM 106
402216367 AIR-CONDITIONING ELECTRICAL GROUP 108
402216164 EVAPORATOR ASSY 110
402216369 JOINT AND PIPE 112
402216372 COMPRESSOR ASSY 114
402216163 CONDENSER SUBASSEMBLY 116
402216368 STORE FLUID POT ASSY 118

UNDERCARRIAGE FRAME 120
402216310 UNDERCARRIAGE FRAME 120
402207906 OUTRIGGER ASSY. 124
402207888 PLATE AS-SWING CYLINDER CONNECTION 126
402212503 PIN SHAFT OF FRONT AXLE 128

EXCAVATING WORKING DEVICE 130
402208047 EXCAVATING WORKING DEVICE 130
402207676 EXCAVATOR BUCKET ASSELBLY 132
402208045 BOOM, ARM, AND CONNECTING ROD ASSEMBLY 134
402205278 CONNECTING ROD ASSEMBLY 138
402208046 ROTATIONAL AS 140

WORKING HYDRAULIC SYSTEM 142
402216287 WORKING HYDRAULIC SYSTEM 142
402216293 DIGGING HYDRAULIC SYSTEM 144
402216286 HYDRAULIC SYSTEM (HAMMER) 146
402208085 BOOM PIPELINE 150
402208123 OUTRIGGER HYDRAULIC SYSTEM 168
402208152 DIGGING CONTROL SYSTEM 176
402208122 ROTARY HYDRAULIC SYSTEM 190
402216284 OPERATIONAL PUMP HYDRAULIC SYSTEM 200
402208158 PRIORITY VALVE ASSY 202
402216282 PRESSURE MEASUREMENT PIPELINE 204
402212107 PUMP ASSY 206
402208091 EXCAVATING VALVE ASSY 212
402208090 LOADING VALVE ASSY 214

402216605 HYDRAULIC OIL TANK ASSEMBLY 220
402216757 HYDRAULIC OIL TANK 222
402216583 BOARD 224
402216295 RADIATOR PIPELINE SYSTEM 226
402208121 LOADING HYDRAULIC SYSTEM 228
402208096 LOADING OPERATION 230
402208120 BUCKET CYLINDER HYDRAULIC SYSTEM 236
402208106 LIFTING HYDRAULIC SYSTEM 248

CAB 260
402216307 CAB 260
402216232 CAB 262
802152995 REAR WINDOW LOCK 266
860570996 LEFT DOOR ASSY 268
402209239 LEFT REAR WINDOW ASSEMBLY 270
860570999 GLASS ASSY 272
860571005 SEAL ASSEMBLY 274
402209356 REAR SLIDING WNDOW 276
860571004 REARVIEW MIRROR COMPONENT 278
402209238 RIGHT REAR WINDOW ASSEMBLY 280
860570997 RIGHT DOOR ASSY 282
860611000 CAB ELECTRICAL SYSTEM 284

ELECTRIC SYSTEM 288
402216259 ELECTRIC SYSTEM 288
402216261 FRAME ELECTRIC SYSTEM 290
402216262 ELECTRICAL 294
803808493 CENTRAL CONTROL BOX 296

POWER SYSTEM 298
402216341 POWER SYSTEM 298
402216339 FUEL TANK ASSY 300
402217230 BOARD 302
402216343 FUEL CIRCUIT ASSEMBLY 304
402216342 ENGINE ASSY 306
800194272 ENGINE 310

402216345 RADIATOR ASSY 442
800194271 RADIATOR 444

ENGINE HOOD ASSEMBLY 444
402214970 ENGINE HOOD ASSEMBLY 444
402214973 HOOD ASSEMBLY 446
402210915 TURNOVER ASSEMBLY 448
402210930 BACK COVER 450

Page Intentionally
Left Blank

402216156 C2570AS

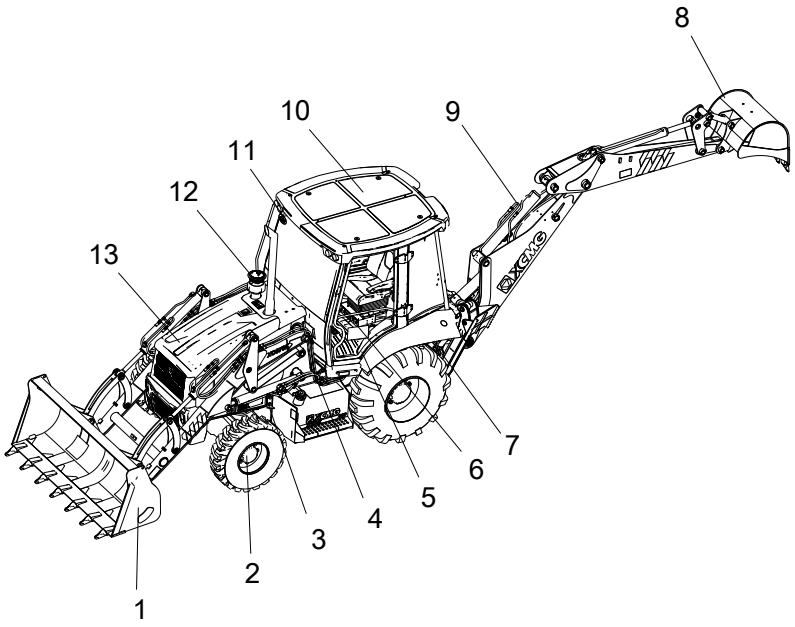

402216156 C2570AS

No.	PART NUMBER	QTY	NAME	NOTE	PAGE
1	**402209611**	1	LOADING WORKING DEVICE		
2	**402216353**	1	DRIVE SHAFT		
3	**402210694**	1	BRAKE HYDRAULIC SYSTEM		
4	**402208162**	1	STEERING HYDRAULIC SYSTEM		
5	**402207763**	1	PARKING BRAKE SYSTEM		
6	**402216335**	1	AIR CONDITIONING SYSTEM		
7	**402216310**	1	UNDERCARRIAGE FRAME		
8	**402208047**	1	EXCAVATING WORKING DEVICE		
9	**402216287**	1	WORKING HYDRAULIC SYSTEM		
10	**402216307**	1	CAB		
11	**402216259**	1	ELECTRIC SYSTEM		
12	**402216341**	1	POWER SYSTEM		
13	**402214970**	1	ENGINE HOOD ASSEMBLY		

402209611 LOADING WORKING DEVICE

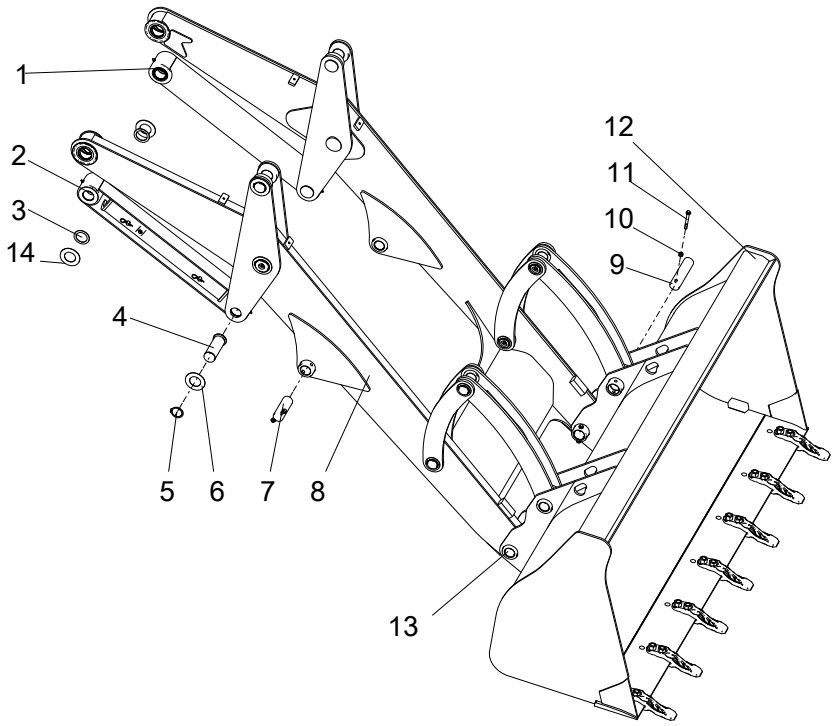

402209611 LOADING WORKING DEVICE

402216156 C2570AS

No.	PART NUMBER	QTY	NAME	NOTE	PAGE
1	**402207955**	1	LEFT PULL ROD ASSEMBLY		
2	**402208002**	1	RIGHT PULL ROD ASSEMBLY		
3	**402100821**	8	SEPARATE BUSH		
4	**402207998**	2	PIN		
5	**805400027**	2	CHECK RING 50	GB/T894.1-1986	
6	**402201838**	6	STEEL PIPE CUSHION		
7	**402208037**	2	PIN		
8	**402209610**	1	BOOM AND CONNECTING ROD ASSEMBLY		
9	**402208036**	4	PIN		
10	**805201515**	6	NUT M10	GB/T6182-2010	
11	**805048014**	6	BOLT M10×85	GB/T16674.1-2004	
12	**402208016**	1	BUCKET ASSEMBLY		
13	**402201058**	8	WASHER		
14	**269900185**	8	ADJUSTING GASKET		

402207955 LEFT PULL ROD ASSEMBLY

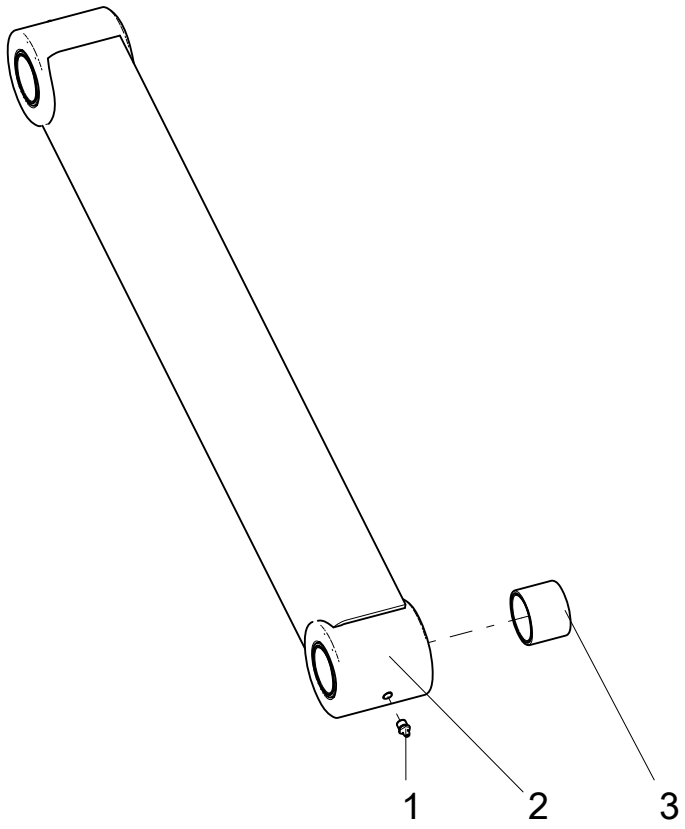

402207955 LEFT PULL ROD ASSEMBLY

402209611 LOADING WORKING DEVICE

No.	PART NUMBER	QTY	NAME	NOTE	PAGE
1	**801103215**	2	OIL CUP M10×1	JB/T7940.1-1995	
2	**402207956**	1	CONTROL LEVER		
3	**402201839**	4	AXIS COVER		

402208002 RIGHT PULL ROD ASSEMBLY

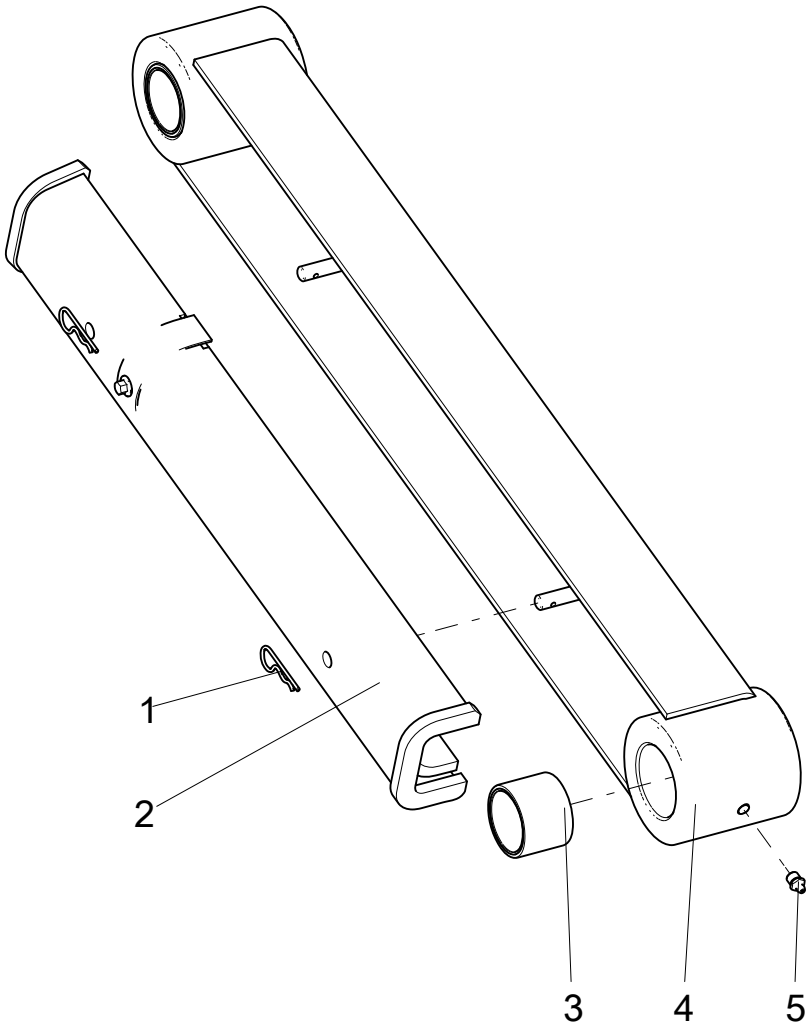

402208002 RIGHT PULL ROD ASSEMBLY

402209611 LOADING WORKING DEVICE

No.	PART NUMBER	QTY	NAME	NOTE	PAGE
1	**402201490**	2	CIRCLIP		
2	**402208005**	1	SAFETY BAR		
3	**402201839**	4	AXIS COVER		
4	**402208003**	1	CONTROL LEVER		
5	**801103215**	2	OIL CUP M10×1	JB/T7940.1-1995	

402208005 SAFETY BAR

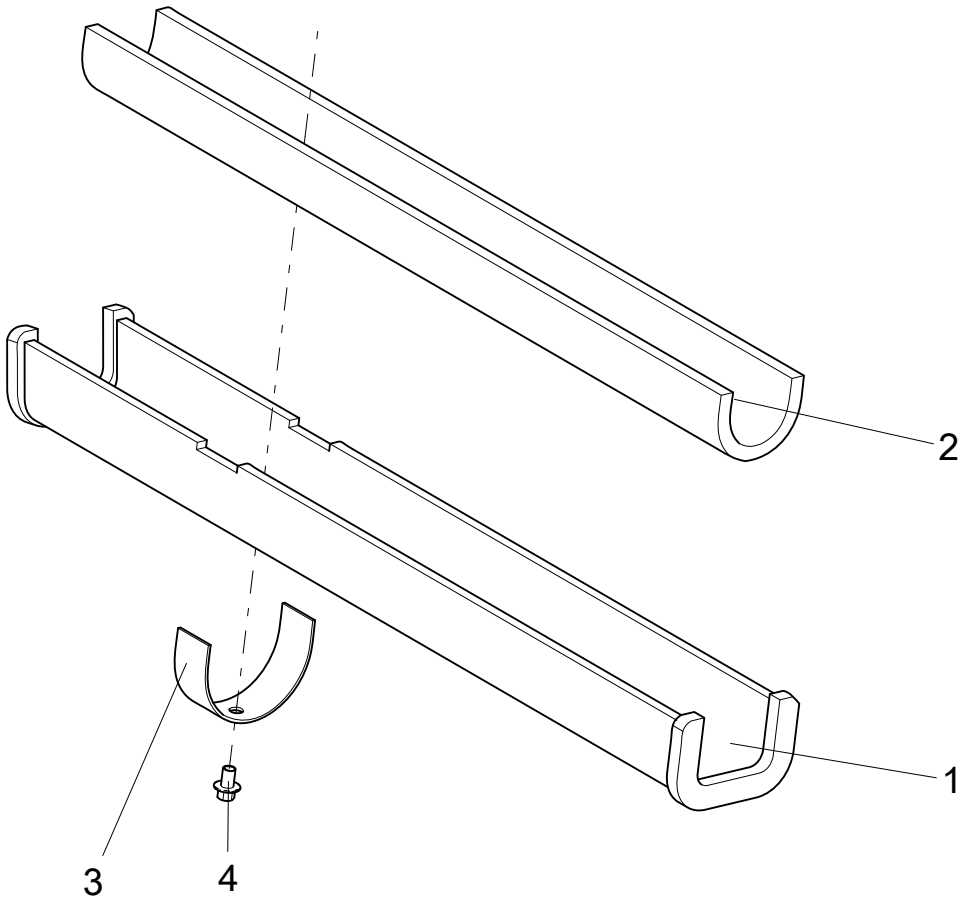

402208005 SAFETY BAR

402208002 RIGHT PULL ROD ASSEMBLY

No.	PART NUMBER	QTY	NAME	NOTE	PAGE
1	**402208006**	1	SAFETY BAR		
2	**402208008**	1	SAFETY BAR SPONGE		
3	**801937970**	1	CLIP STRIP	CABLE TIE	
4	**805047997**	1	BOLT M8×12(DACROMET)	GB/T16674.1-2004	

402209610 BOOM AND CONNECTING ROD ASSEMBLY

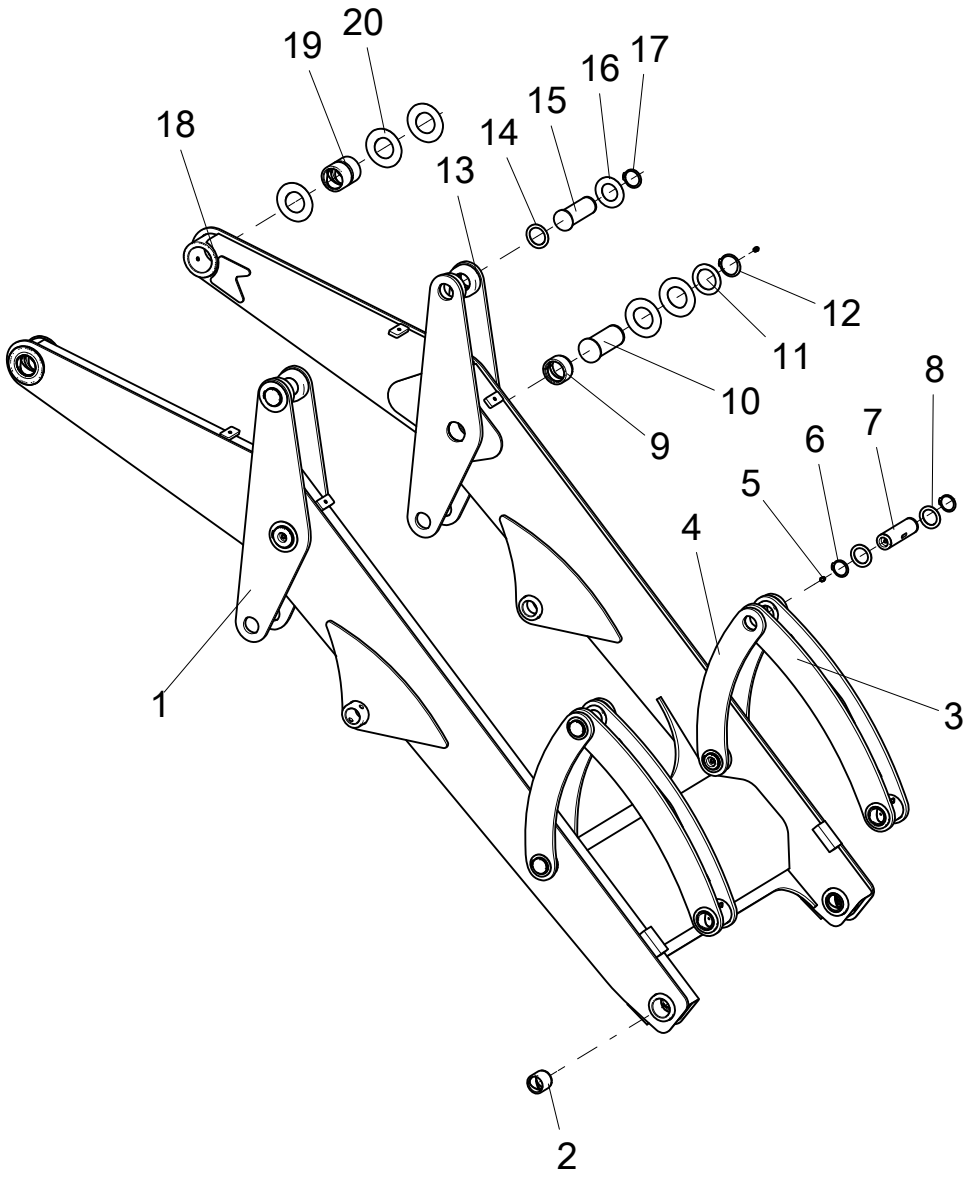

402209610 BOOM AND CONNECTING ROD ASSEMBLY

402209611 LOADING WORKING DEVICE

No.	PART NUMBER	QTY	NAME	NOTE	PAGE
1	**402207990**	2	ROCKER ARMI		
2	**402207996**	8	AXIS COVER		
3	**402208009**	2	BUCKET LINK BAR		
4	**402207994**	4	BOOM CONNECTING ROD		
5	**801100336**	10	OIL CUP M10×1	JB/T7940.1-1995	
6	**805400021**	8	BAFFLE RING 45	GB/T894.1-1986	
7	**402207999**	4	PIN		
8	**402100947**	8	WASHER		
9	**402207995**	4	AXIS COVER		
10	**402207997**	2	PIN		
11	**402208000**	2	SPACER		
12	**805400008**	2	RETAINING RING	GB/T894.1-1986	
13	**402207993**	2	ROCKER ARMII		
14	**402100821**	4	SEPARATE BUSH		
15	**402207998**	2	PIN		
16	**402201838**	2	STEEL PIPE CUSHION		
17	**805400027**	2	CHECK RING 50	GB/T894.1-1986	
18	**402217300**	1	BOOM		
19	**402208001**	2	AXIS COVER		
20	**402204388**	14	MAT		

402208009 BUCKET LINK BAR

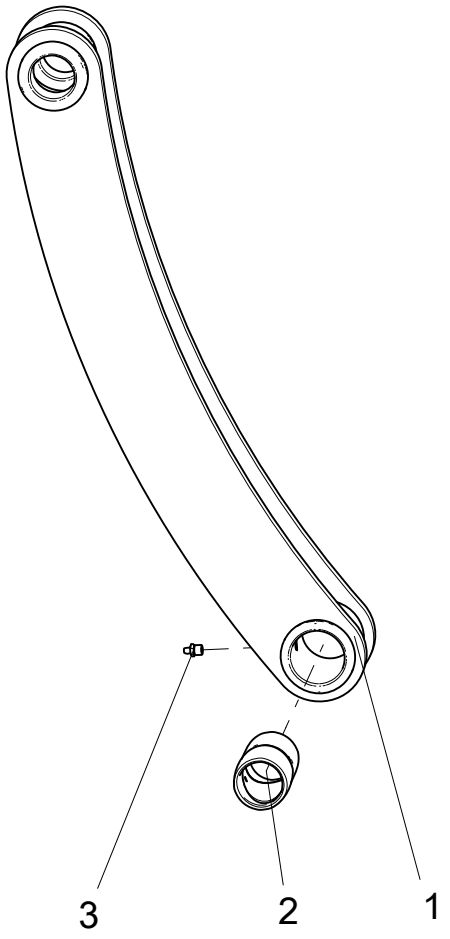

402208009 BUCKET LINK BAR

402209610 BOOM AND CONNECTING ROD ASSEMBLY

No.	PART NUMBER	QTY	NAME	NOTE	PAGE
1	**402208010**	1	BUCKET CONNECTING ROD		
2	**402208015**	1	AXIS COVER		
3	**801103215**	1	OIL CUP M10×1	JB/T7940.1-1995	

402208016 BUCKET ASSEMBLY

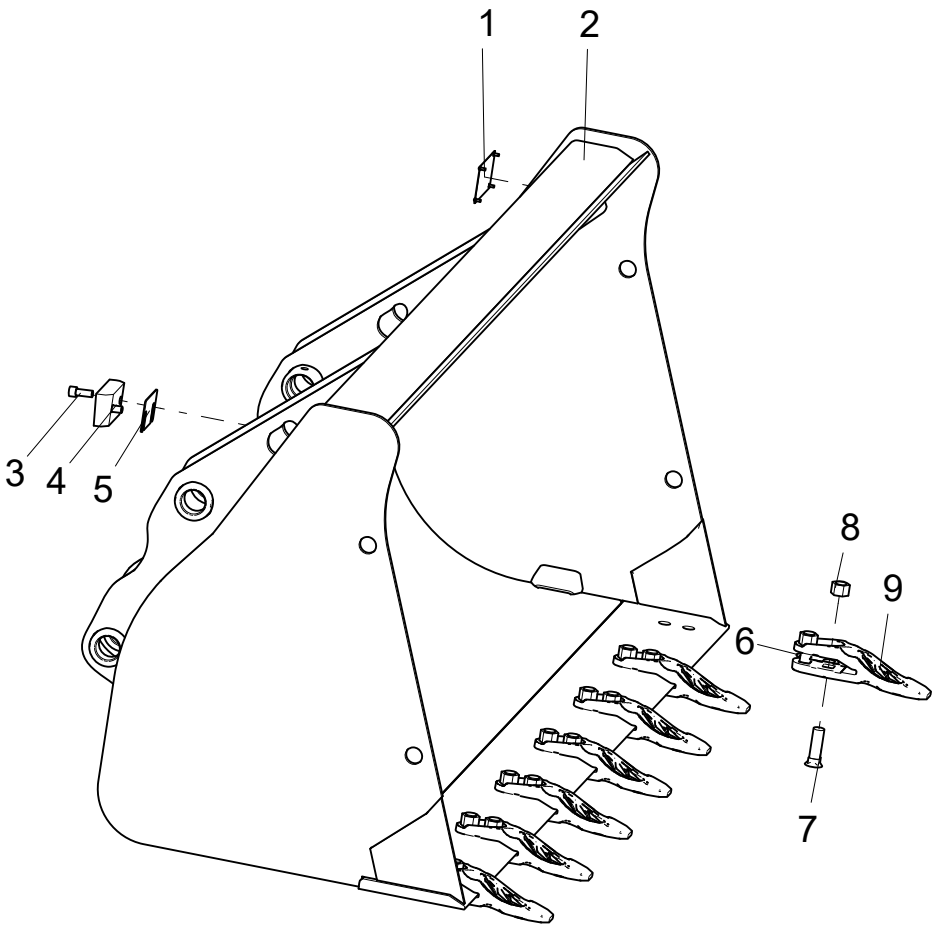

402208016 BUCKET ASSEMBLY

402209611 LOADING WORKING DEVICE

No.	PART NUMBER	QTY	NAME	NOTE	PAGE
1	**402213504**	1	BUCKET NAMEPLATE		
2	**402208017**	1	BUCKET		
3	**805140018**	4	SCREWS	GB/T70.1-2008	
4	**402205826**	2	BUCKET RETRACTION ASSEMBLY LIMIT BLOCK		
5	**402205832**	2	ADJUSTING SPACER		
6	**402214966**	7	ADJUSTING GASKET		
7	**819965289**	14	BOLT OF BUCKET TEETH		
8	**819965290**	14	NUT		
9	**819964525**	7	TOOTH		

402216353 DRIVE SHAFT

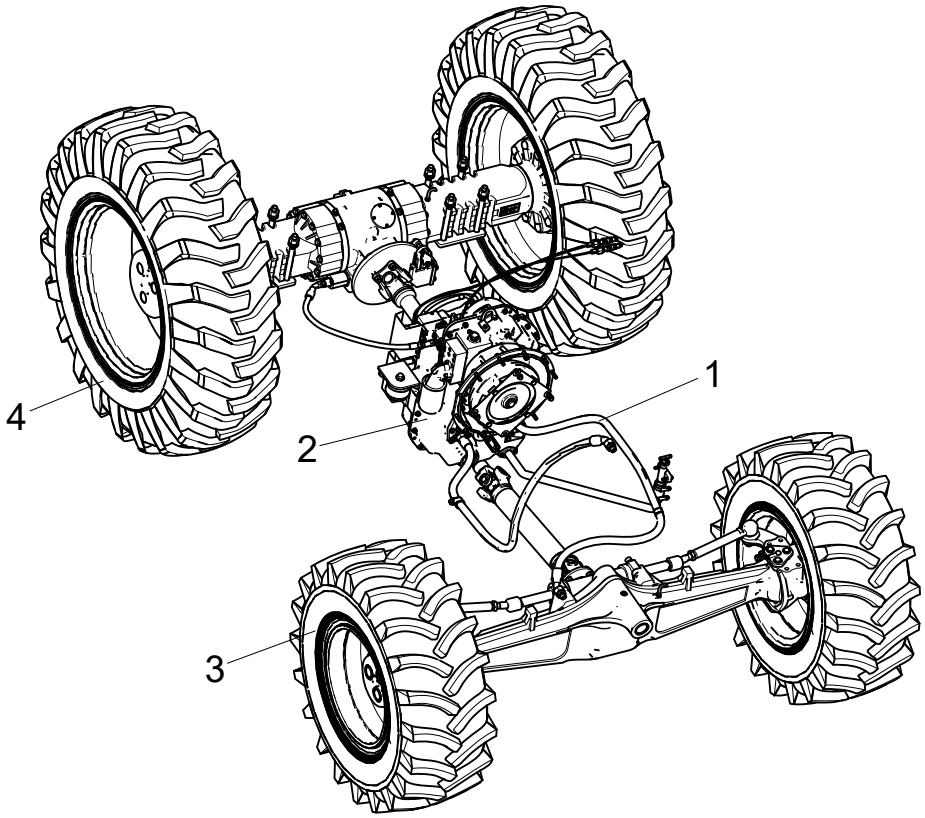

402216353 DRIVE SHAFT

402216156 C2570AS

No.	PART NUMBER	QTY	NAME	NOTE	PAGE
1	**402216354**	1	TUBE		
2	**402216355**	1	TRANSMISSION ASSY		
3	**402216357**	1	FRONT AXLE ASSY		
4	**402216356**	1	REAR AXLE ASSY		

402216354 TUBE

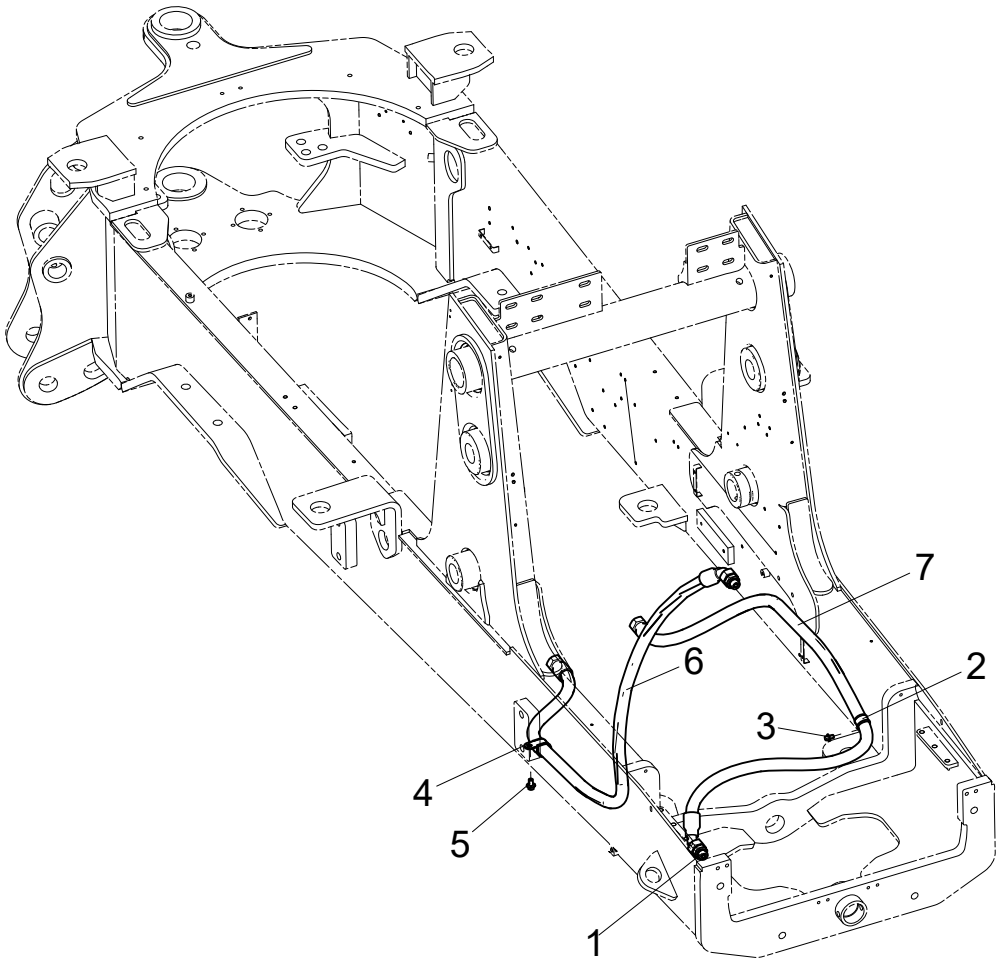

402216354 TUBE

402216353 DRIVE SHAFT

No.	PART NUMBER	QTY	NAME	NOTE	PAGE
1	**803109635**	2	SPLICE		
2	**803300172**	1	CUTTING SLEEVE Φ30	TJBC	
3	**805047997**	1	BOLT M8×12(DACROMET)	GB/T16674.1-2004	
4	**803300801**	1	FERRULE Φ35-11	TJBC	
5	**805048005**	1	BOLT M10×16(DACROMET)	GB/T16674.1-2004	
6	**803381625**	1	HOSE ASSEMBLY		
7	**803486409**	1	HOSE ASSEMBLY		

402216355 TRANSMISSION ASSY

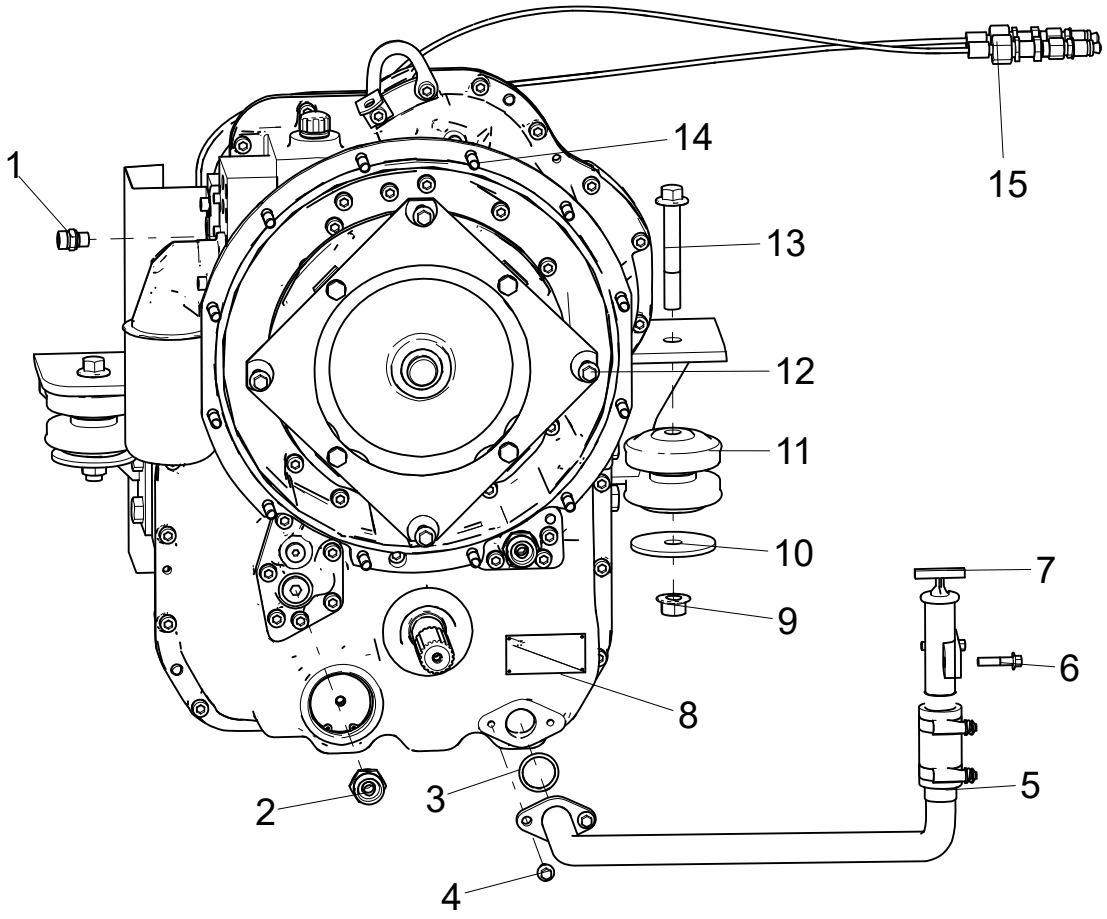

402216355 TRANSMISSION ASSY

402216353 DRIVE SHAFT

No.	PART NUMBER	QTY	NAME	NOTE	PAGE
1	**803105414**	1	SPLICE		
2	**803103526**	2	SPLICE		
3	**803401127**	1	ORING32.92×3.53	219N552-90	
4	**805004756**	2	BOLT M8×20 (DACROMET)	GB/T16674.1-2004	
5	**402215172**	1	OIL FILLING PIPE		
6	**805047998**	2	BOLT M8×35	GB/T16674.1-2004	
7	**402215176**	1	OIL POINTER		
8	**272103520**	1	TRANSMISSION		
9	**805200212**	2	NUT M16	GB/T6177.1-2000	
10	**402212366**	2	RETAINER FLEX-PLATE		
11	**800161564**	4	VIBRATION DAMPER		
12	**805048008**	4	BOLT M10×40	GB/T16674.1-2004	
13	**805047991**	2	BOLT M16×110 (DACROMET)	GB/T16674.1-2004	
14	**805004714**	12	BOLT M10×50	GB/T16674.1-2004	
15	**402215011**	1	PRESSURE GAUGE ADAPTOR ASSY		

402215172 OIL FILLING PIPE

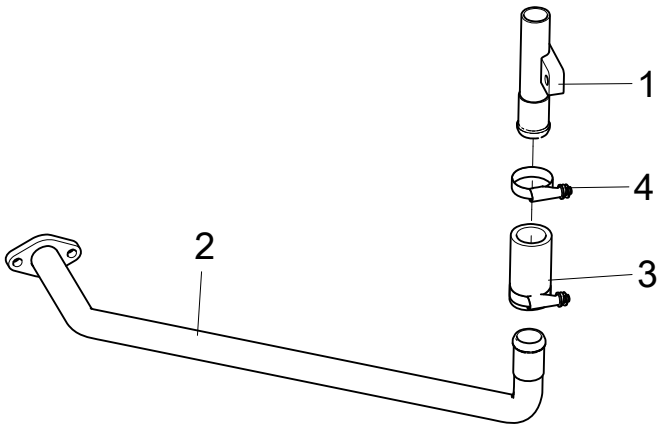

402215172 OIL FILLING PIPE

402216355 TRANSMISSION ASSY

No.	PART NUMBER	QTY	NAME	NOTE	PAGE
1	**402215170**	1	OIL PIPE		
2	**402215171**	1	FILLER PIPE II		
3	**402215175**	1	HOSEPIPE		
4	**800160714**	2	HOOP		

272103520 TRANSMISSION

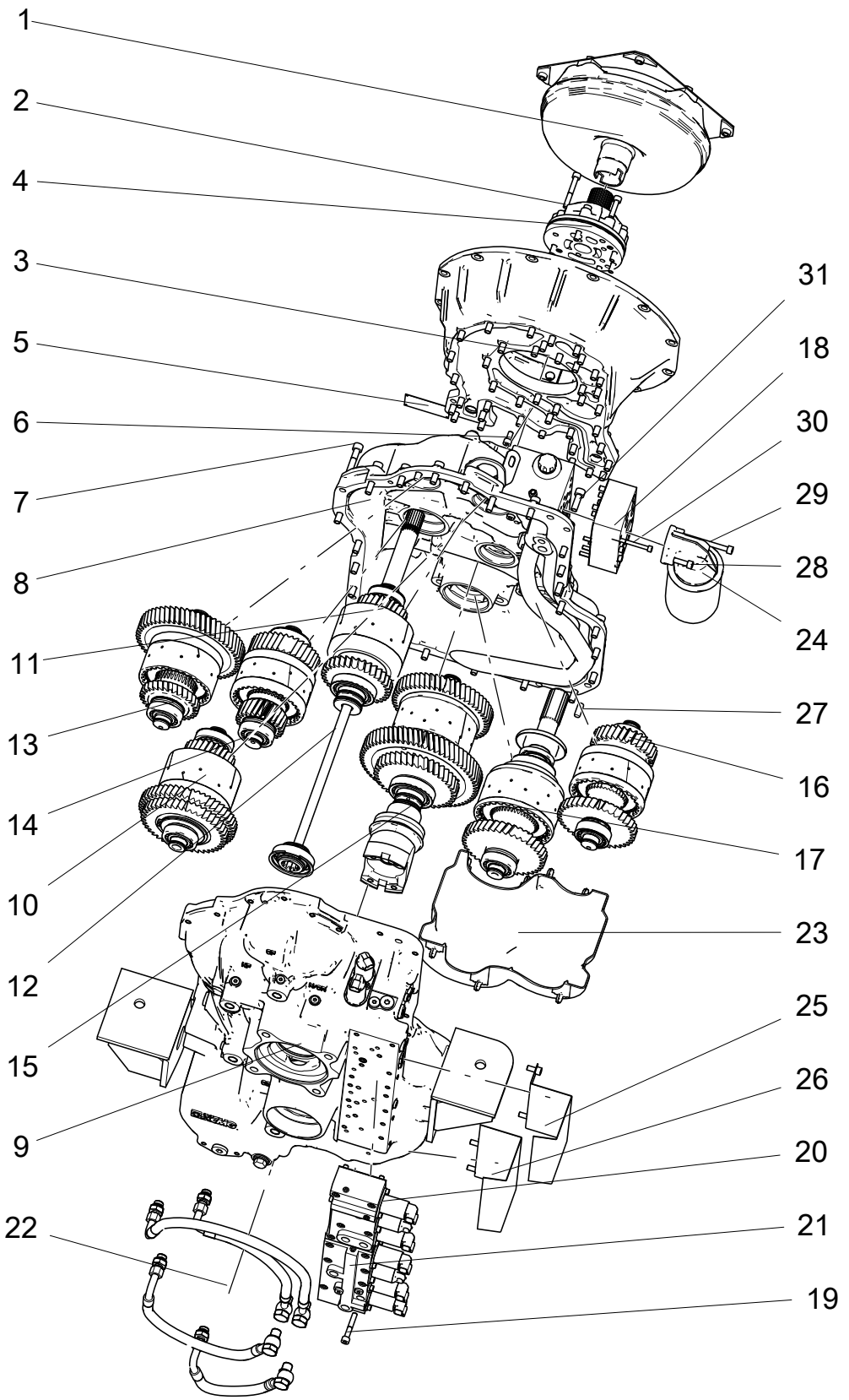

272103520 TRANSMISSION

402216355 TRANSMISSION ASSY

No.	PART NUMBER	QTY	NAME	NOTE	PAGE
1	**272101750**	1	TORQUE CONVERTOR		
2	**805140936**	8	SCREW M8×60 (DACROMET)	GB/T70.1-2008	
3	**272101767**	1	CONVERTER BELLHOUSING		
4	**804002267**	1	PUMP ASSEMBLY		
5	**275101928**	1	NAMEPLATE		
6	**805141142**	6	SCREW M8×16 (DACROMET)	GB/T70.1-2008	
7	**805139919**	10	SCREW M10×50 (DACROMET)	GB/T70.1-2008	
8	**272101760**	1	GROUP TRANSMISSION HOUSING FRONT PART		
9	**272101751**	1	GROUP TRANSMISSION HOUSING BACK PART		
10	**272101752**	1	GROUP CF CLUTCH		
11	**272101753**	1	GROUP N/CR CLUTCH		
12	**272101755**	1	PTO ASSEMBLY		
13	**272101754**	1	GROUP KF CLUTCH		
14	**272101756**	1	GROUP C1 CLUTCH		
15	**272101757**	1	GROUP C2/O CLUTCH		
16	**272101758**	1	GROUP C3 CLUTCH		
17	**272101759**	1	GROUP FA CLUTCH		
18	**272101763**	1	GROUP VALVE ASSY		
19	**805140978**	22	SCREW M8×50 (DACROMET)	GB/T70.1-2008	
20	**272101761**	1	GROUP UPPER INTEGRATED VALVE		
21	**272101762**	1	GROUP LOWER INTEGRATED VALVE		
22	**272101765**	1	HOSE ASSEMBLY		
23	**272101748**	1	BAFFLE-OIL		
24	**272101764**	1	FILTER		
25	**272102510**	1	SHIELD I		
26	**272102511**	1	SHIELD II		
27	**805640004**	4	PIN 10U8×24	GB/T119.1-2000	
28	**805140927**	3	SCREW M8×35	GB/T70.1-2008	

272103520 TRANSMISSION

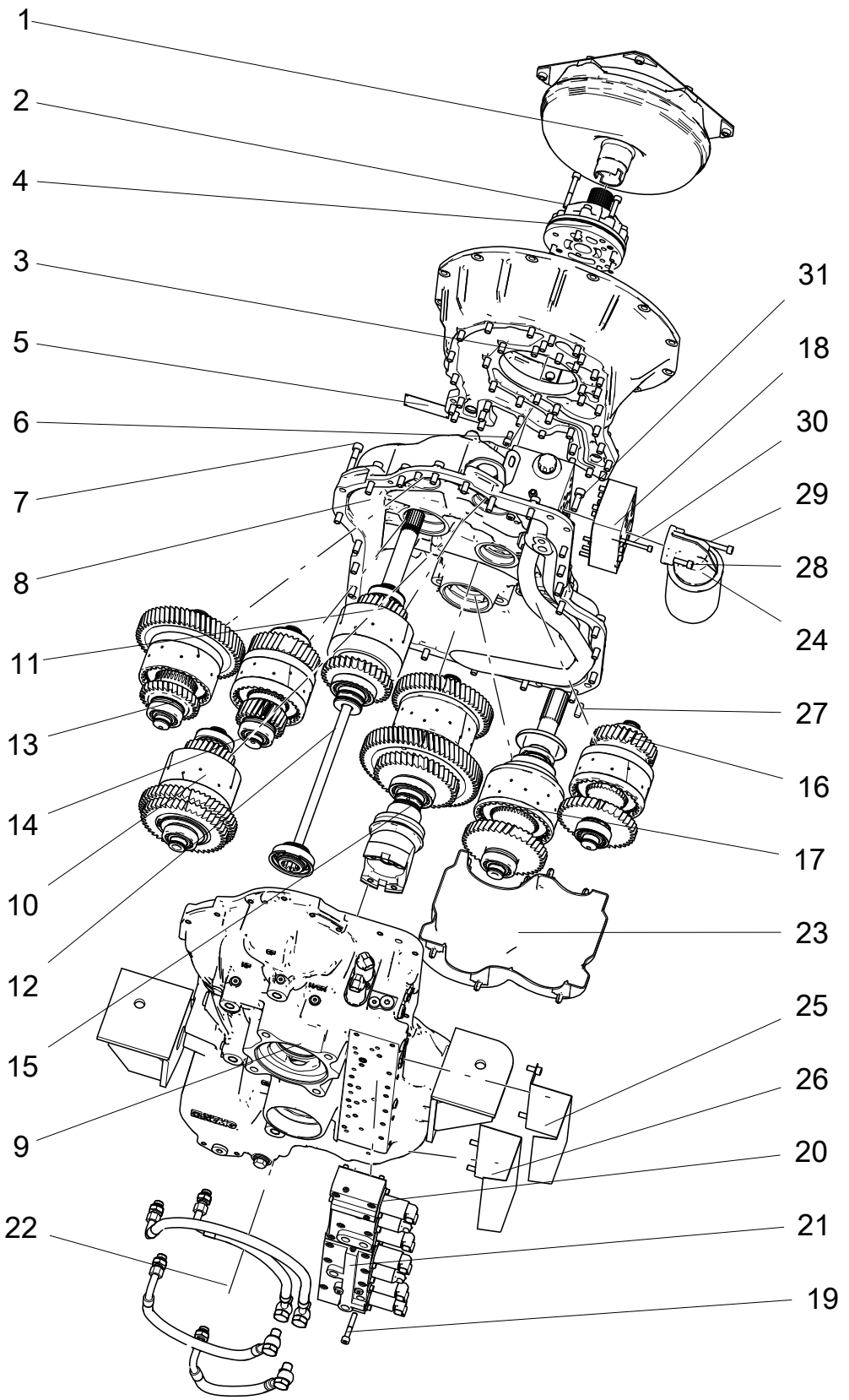

272103520 TRANSMISSION

402216355 TRANSMISSION ASSY

No.	PART NUMBER	QTY	NAME	NOTE	PAGE
29	**805140943**	1	SCREW M8×80(DACROMET)	GB/T70.1-2008	
30	**805141140**	4	SCREW M6×65	GB/T70.1-2008	
31	**805140008**	15	SCREW M10×30(DACROMET)	GB/T70.1-2008	

272101767 CONVERTER BELLHOUSING

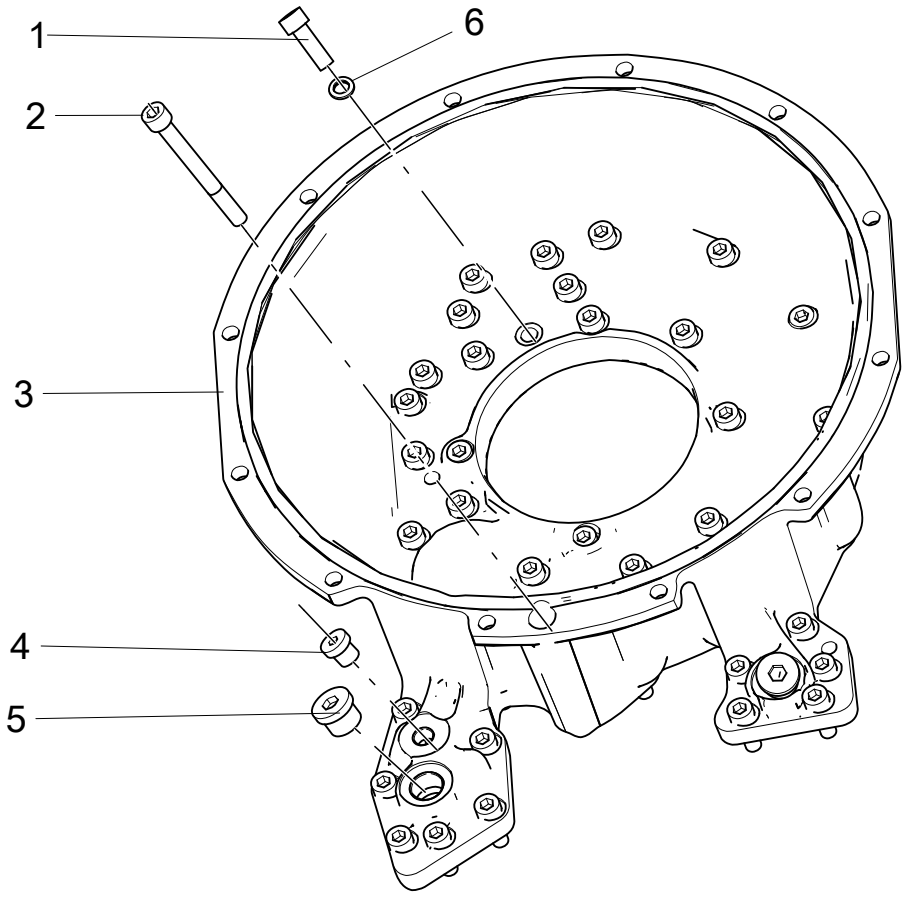

272101767 CONVERTER BELLHOUSING

272103520 TRANSMISSION

No.	PART NUMBER	QTY	NAME	NOTE	PAGE
1	**805140008**	40	SCREW M10×30(DACROMET)	GB/T70.1-2008	
2	**805140780**	1	SCREW M10×100 (DACROMET)	GB/T70.1-2008	
3	**272101884**	1	CONVERTOR HOUSING	272103723	
4	**803111489**	1	END CAP		
5	**803110182**	2	END CAP		
6	**805300037**	29	SPRING WASHER 10	JB/T982-1977	

272101760 GROUP TRANSMISSION HOUSING FRONT PART

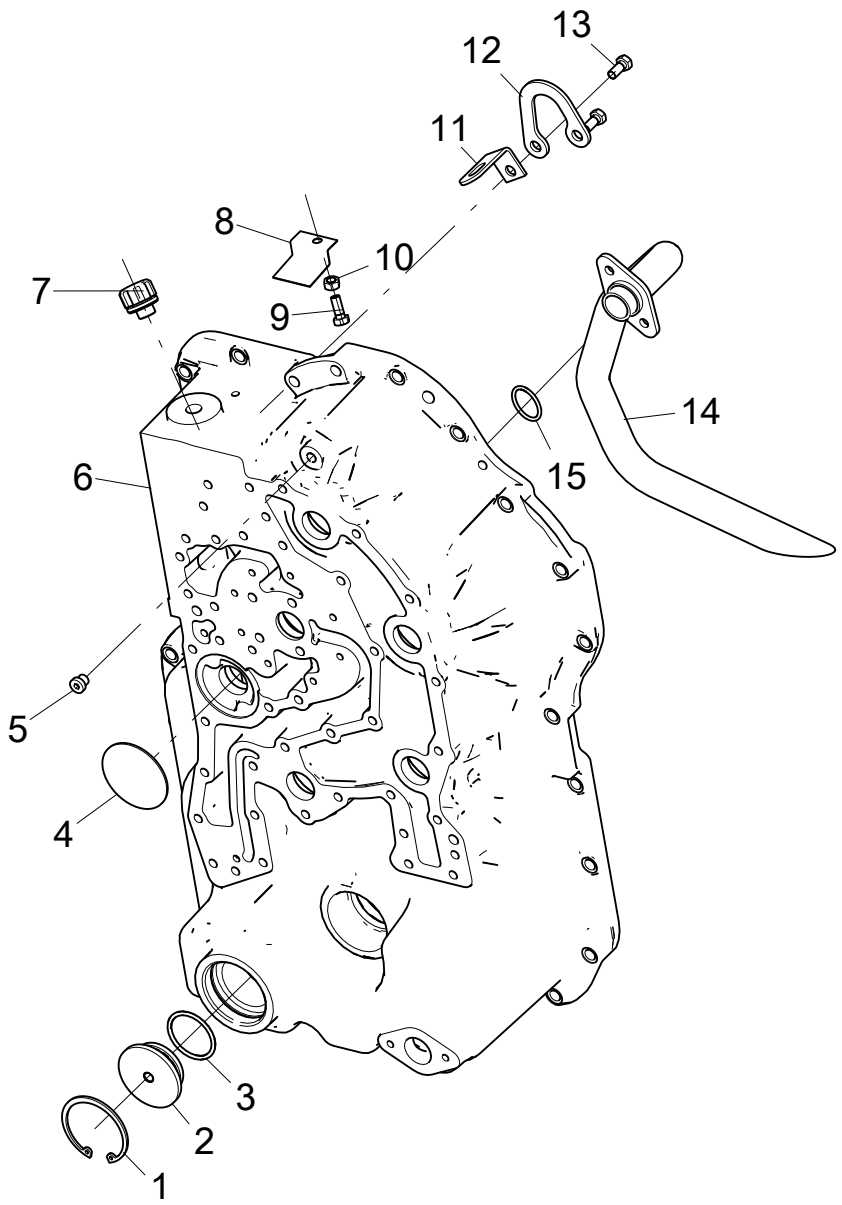

272101760 GROUP TRANSMISSION HOUSING FRONT PART

272103520 TRANSMISSION

No.	PART NUMBER	QTY	NAME	NOTE	PAGE
1	**805401235**	1	SEPARATE BUSH 65	GB/T893.1-1986	
2	**272101917**	1	BAFFLE-OIL CAP		
3	**803192130**	1	O-RING 43.7×3.55	GB/T3452.1-2005	
4	**272101878**	1	FILTER		
5	**803110184**	1	END CAP		
6	**272101866**	1	TRANSMISSION HOUSING FRONT PART		
7	**272100394**	1	BREATHER-AIR		
8	**272102507**	1	BAFFLE-OIL PLATE		
9	**805046508**	1	BOLT M8×20 (DACROMET)	GB/T5783-2000	
10	**805046477**	1	NUT M8	GB/T6170-2000	
11	**272101910**	1	BRACKET		
12	**272101915**	1	LIFTING RING		
13	**805046505**	2	BOLT M8×18(DACROMET)	GB/T5783-2000	
14	**272101918**	1	ASSY-SUCTION TUBE		
15	**272101916**	1	O RING	MYF110.4-3	

272101751 GROUP TRANSMISSION HOUSING BACK PART

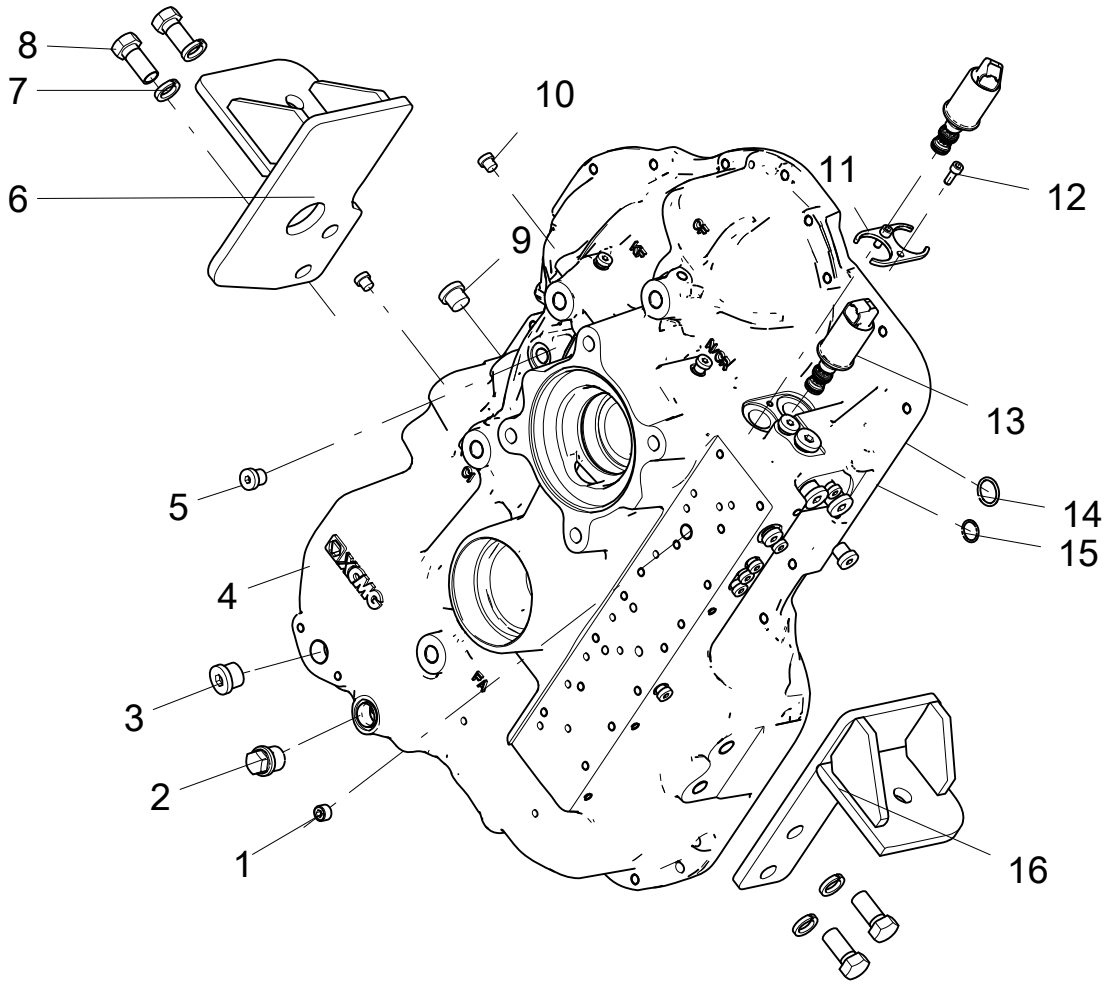

272101751 GROUP TRANSMISSION HOUSING BACK PART

272103520 TRANSMISSION

No.	PART NUMBER	QTY	NAME	NOTE	PAGE
1	**272101981**	1	PLUG M14		
2	**272102081**	1	SCREW PLUG		
3	**803110182**	1	END CAP		
4	**272101870**	1	TRANSMISSION HOUSING BACK PART		
5	**803111489**	4	END CAP		
6	**272103515**	1	BRACKET I		
7	**805338263**	4	SPRING WASHER 16	GB/T93-1987	
8	**805006289**	4	BOLT M16×35	GB/T5783-2000	
9	**803110183**	4	END CAP		
10	**803110184**	10	END CAP		
11	**272101880**	1	RETAINER FLEX-PLATE		
12	**805140029**	2	SCREW M6×16 (DACROMET)	GB/T70.1-2008	
13	**272101872**	2	SOLENOID VALVE		
14	**801103251**	1	O-RING	GB/T3452.1-2005	
15	**801138409**	1	ORING 17×1.8	GB/T3452.1-2005	
16	**272103516**	1	BRACKET II		

272101752 GROUP CF CLUTCH

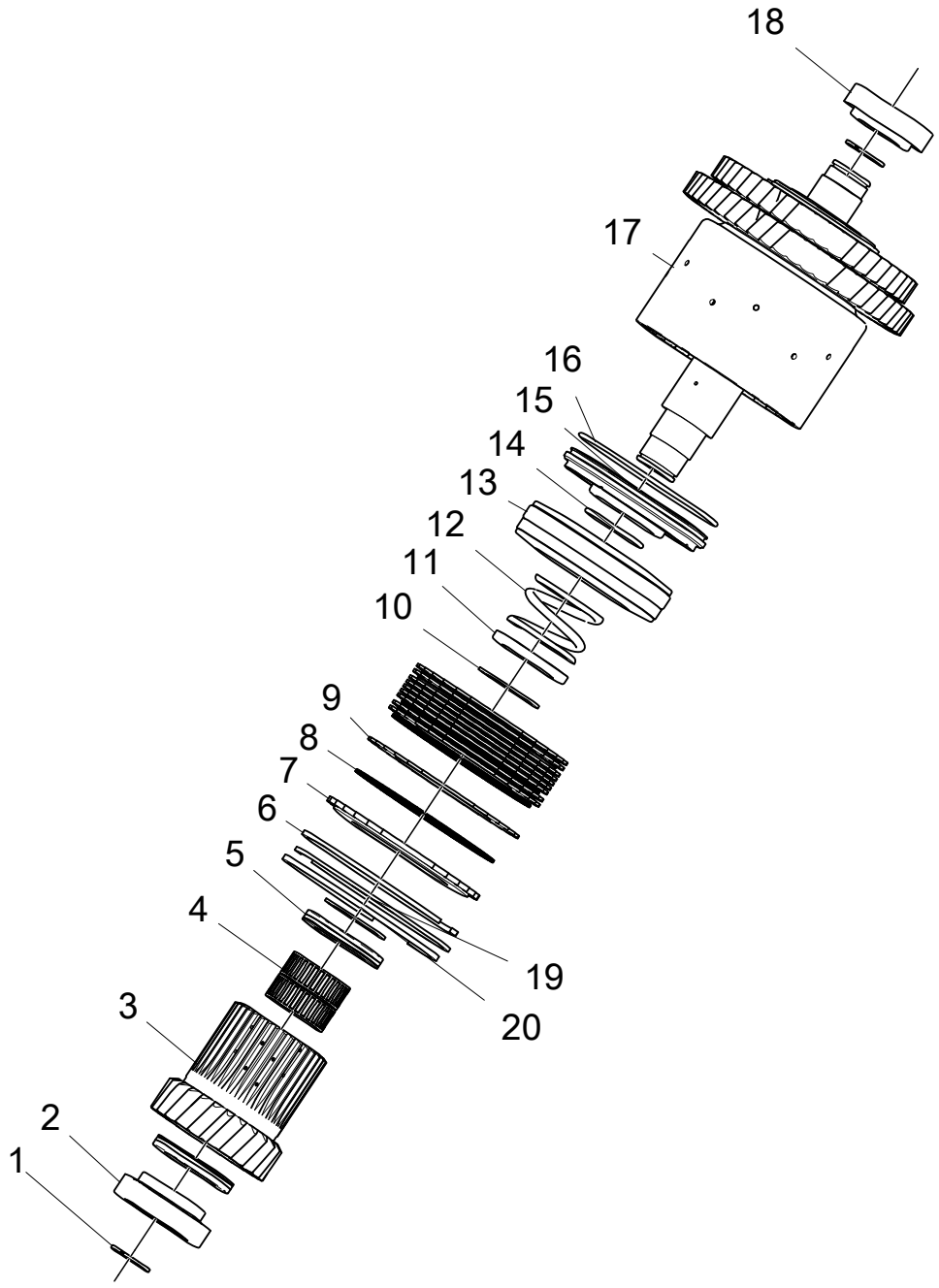

272101752 GROUP CF CLUTCH

272103520 TRANSMISSION

No.	PART NUMBER	QTY	NAME	NOTE	PAGE
1	**272100804**	2	SNAP RING		
2	**800556420**	1	BEARING M88046/M88010AS		
3	**272101783**	1	GEAR CF CLUTCH		
4	**272101769**	2	NEEDLE BEARING		
5	**272101772**	2	TRUST BEARING		
6	**272101844**	1	SEPARATE BUSH123×115×3		
7	**272101782**	1	PLATE END		
8	**272101771**	10	DISC OUTER		
9	**272101774**	10	DISC INNER		
10	**805408061**	2	SEPARATE BUSH 40×1.75	DIN471	
11	**272101785**	1	SPRING SEAT		
12	**272101784**	1	SPING		
13	**272101775**	1	PLATE ASSY WITH CUP SPRINGS		
14	**272101770**	1	ORING40×3	MYF110.6.6-2	
15	**272101777**	1	PISTON		
16	**272101768**	1	ORING104.5×3	MYF110.6.6-3	
17	**272101779**	1	CF CLUTCH	272104517	
18	**800556418**	1	BEARING 15126A/15245		
19	**272101994**	1	SEPARATE BUSH123×115×2.5	SELECT ASSY	
20	**272101996**	1	SEPARATE BUSH123×115×3.5	SELECT ASSY	

272101753 GROUP N/CR CLUTCH

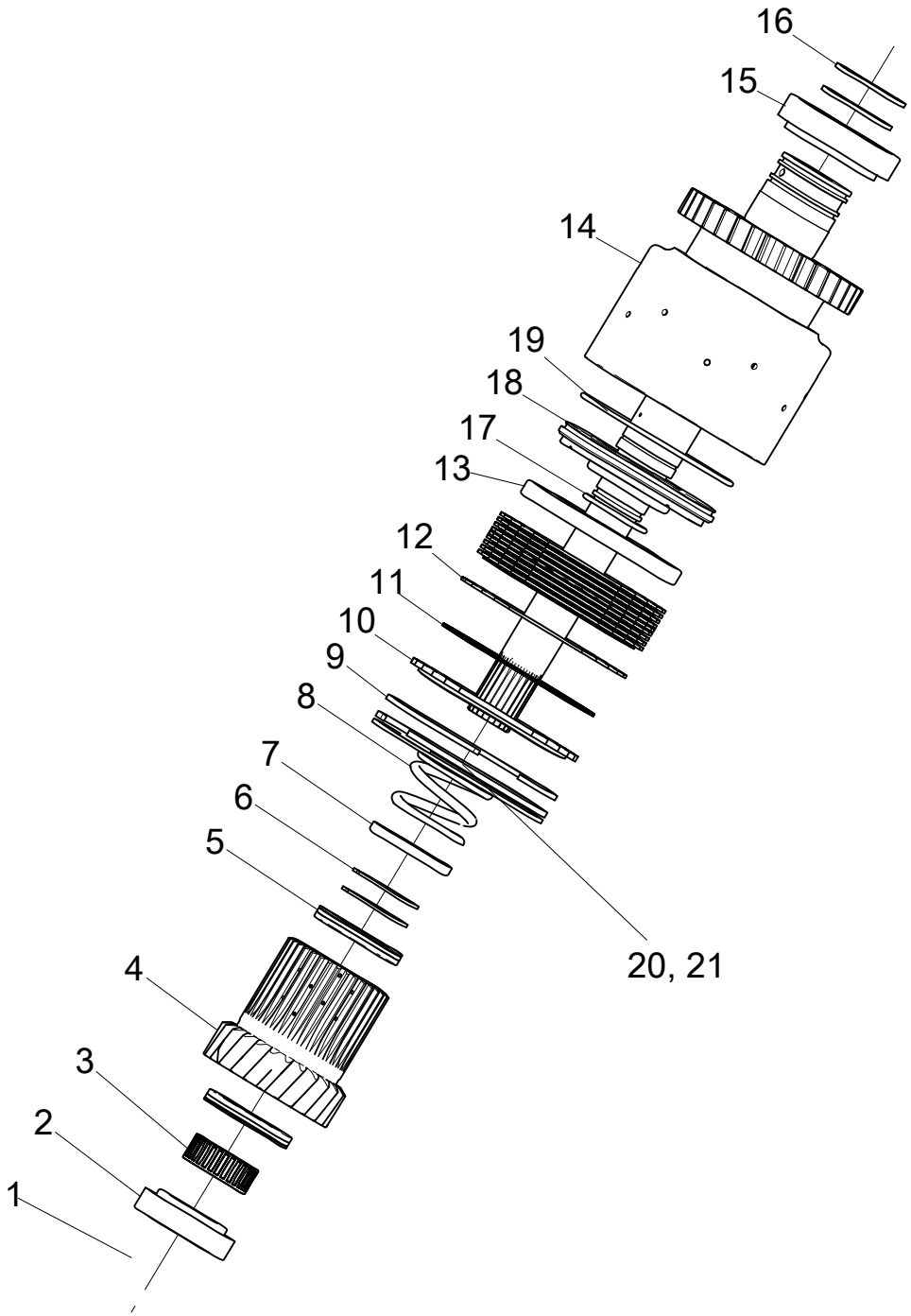

272101753 GROUP N/CR CLUTCH

272103520 TRANSMISSION

No.	PART NUMBER	QTY	NAME	NOTE	PAGE
1	**272101836**	1	SNAP RING		
2	**800556419**	1	BEARING LM48548/LM48510		
3	**272101769**	2	NEEDLE BEARING		
4	**272101783**	1	GEAR CF CLUTCH		
5	**272101772**	2	TRUST BEARING		
6	**805408061**	2	SEPARATE BUSH 40×1.75	DIN471	
7	**272101785**	1	SPRING SEAT		
8	**272101784**	1	SPING		
9	**272101844**	1	SEPARATE BUSH123×115×3		
10	**272101782**	1	PLATE END		
11	**272101771**	10	DISC OUTER		
12	**272101774**	10	DISC INNER		
13	**272101775**	1	PLATE ASSY WITH CUP SPRINGS		
14	**272101841**	1	N/CR CLUTCH	272104530	
15	**800553899**	1	BEARING 32010	GB/T297-1994	
16	**272101831**	2	SNAP RING		
17	**272101770**	1	ORING40×3	MYF110.6.6-2	
18	**272101777**	1	PISTON		
19	**272101768**	1	ORING104.5×3	MYF110.6.6-3	
20	**272101996**	1	SEPARATE BUSH123×115×3.5	SELECT ASSY	
21	**272101994**	1	SEPARATE BUSH123×115×2.5	SELECT ASSY	

272101755 PTO ASSEMBLY

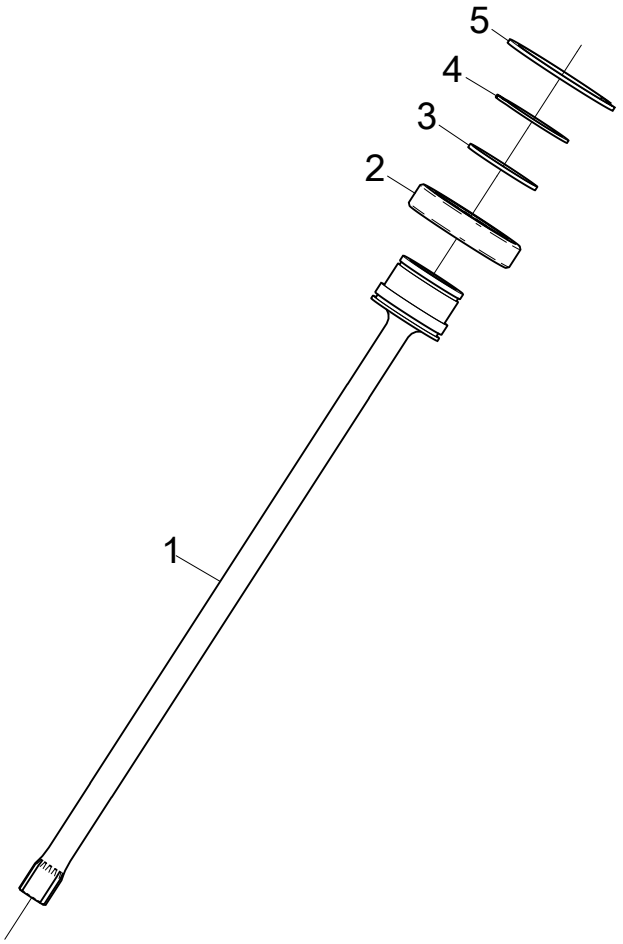

272101755 PTO ASSEMBLY

272103520 TRANSMISSION

No.	PART NUMBER	QTY	NAME	NOTE	PAGE
1	**272101816**	1	PTO; COAXIAL, ENGINE-DEPENDENT (CENTRAL SHAFT)		
2	**800556417**	1	BEARING 6009C3		
3	**272101831**	1	SNAP RING		
4	**805408084**	1	SEPARATE BUSH 45×1.75	DIN471	
5	**805408085**	1	SEPARATE BUSH 75×2.5	DIN472	

272101754 GROUP KF CLUTCH

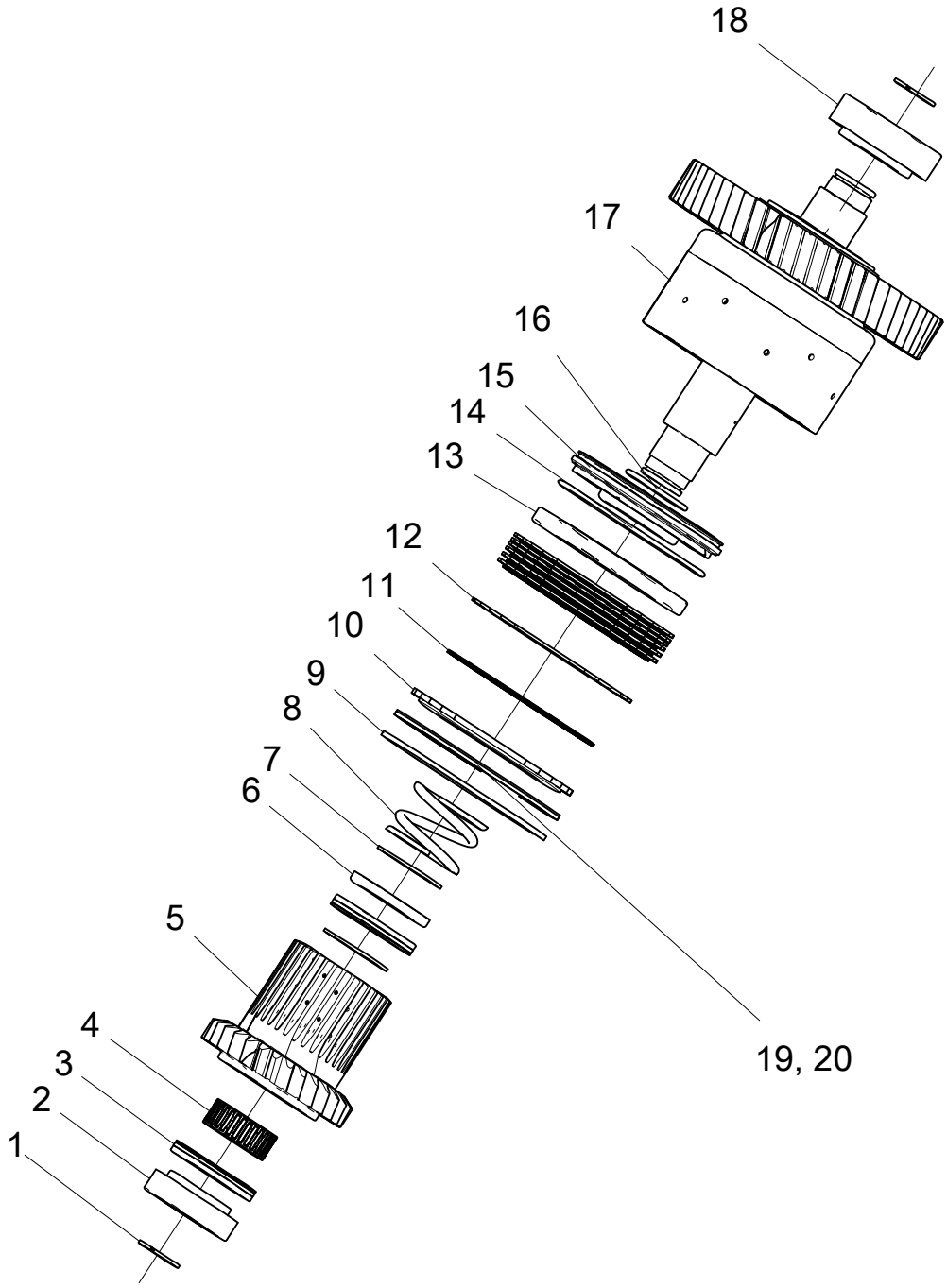

272101754 GROUP KF CLUTCH

272103520 TRANSMISSION

No.	PART NUMBER	QTY	NAME	NOTE	PAGE
1	**272100804**	2	SNAP RING		
2	**800556418**	1	BEARING 15126A/15245		
3	**272101772**	2	TRUST BEARING		
4	**272101769**	2	NEEDLE BEARING		
5	**272101821**	1	GEAR KF CLUTCH		
6	**272101785**	1	SPRING SEAT		
7	**805408061**	2	SEPARATE BUSH 40×1.75	DIN471	
8	**272101784**	1	SPING		
9	**272101844**	1	SEPARATE BUSH123×115×3		
10	**272101782**	1	PLATE END		
11	**272101771**	7	DISC OUTER		
12	**272101774**	7	DISC INNER		
13	**272101775**	1	PLATE ASSY WITH CUP SPRINGS		
14	**272101768**	1	ORING104.5×3	MYF110.6.6-3	
15	**272101777**	1	PISTON		
16	**272101770**	1	ORING40×3	MYF110.6.6-2	
17	**272101815**	1	KF CLUTCH	272104520	
18	**800556416**	1	BEARING 25877/25821		
19	**272101994**	1	SEPARATE BUSH123×115×2.5	SELECT ASSY	
20	**272101996**	1	SEPARATE BUSH123×115×3.5	SELECT ASSY	

272101756 GROUP C1 CLUTCH

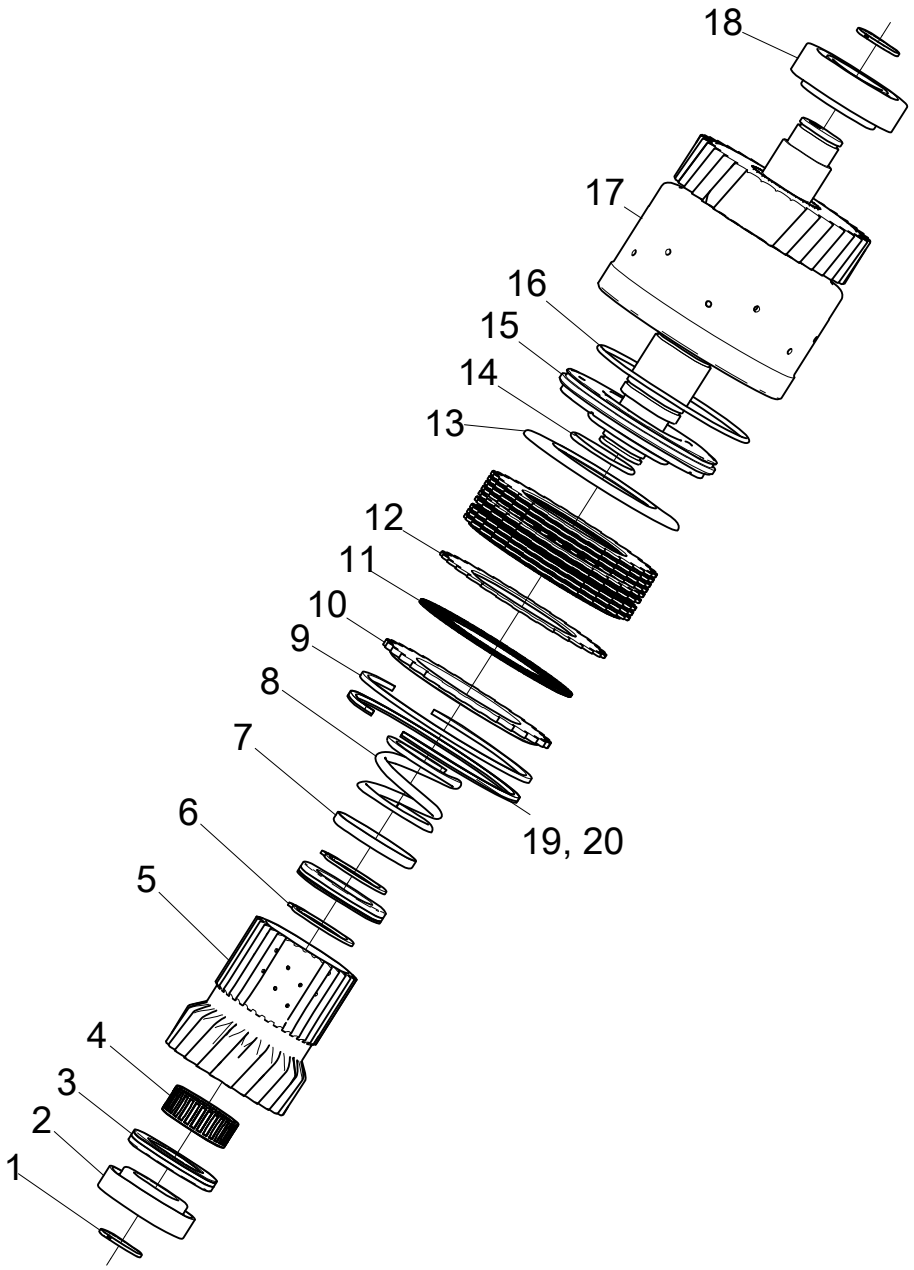

272101756 GROUP C1 CLUTCH

272103520 TRANSMISSION

No.	PART NUMBER	QTY	NAME	NOTE	PAGE
1	**272100804**	2	SNAP RING		
2	**800556418**	1	BEARING 15126A/15245		
3	**272101772**	2	TRUST BEARING		
4	**272101769**	2	NEEDLE BEARING		
5	**272101824**	1	GEAR C1 CLUTCH		
6	**805408061**	2	SEPARATE BUSH 40×1.75	DIN471	
7	**272101785**	1	SPRING SEAT		
8	**272101784**	1	SPING		
9	**272101844**	1	SEPARATE BUSH123×115×3		
10	**272101782**	1	PLATE END		
11	**272101771**	10	DISC OUTER		
12	**272101774**	10	DISC INNER		
13	**272101845**	1	CUP SPRING		
14	**272101770**	1	ORING40×3	MYF110.6.6-2	
15	**272101777**	1	PISTON		
16	**272101768**	1	ORING104.5×3	MYF110.6.6-3	
17	**272101818**	1	C1 CLUTCH	272104531	
18	**800556416**	1	BEARING 25877/25821		
19	**272101994**	1	SEPARATE BUSH123×115×2.5	SELECT ASSY	
20	**272101996**	1	SEPARATE BUSH123×115×3.5	SELECT ASSY	

272101757 GROUP C2/O CLUTCH

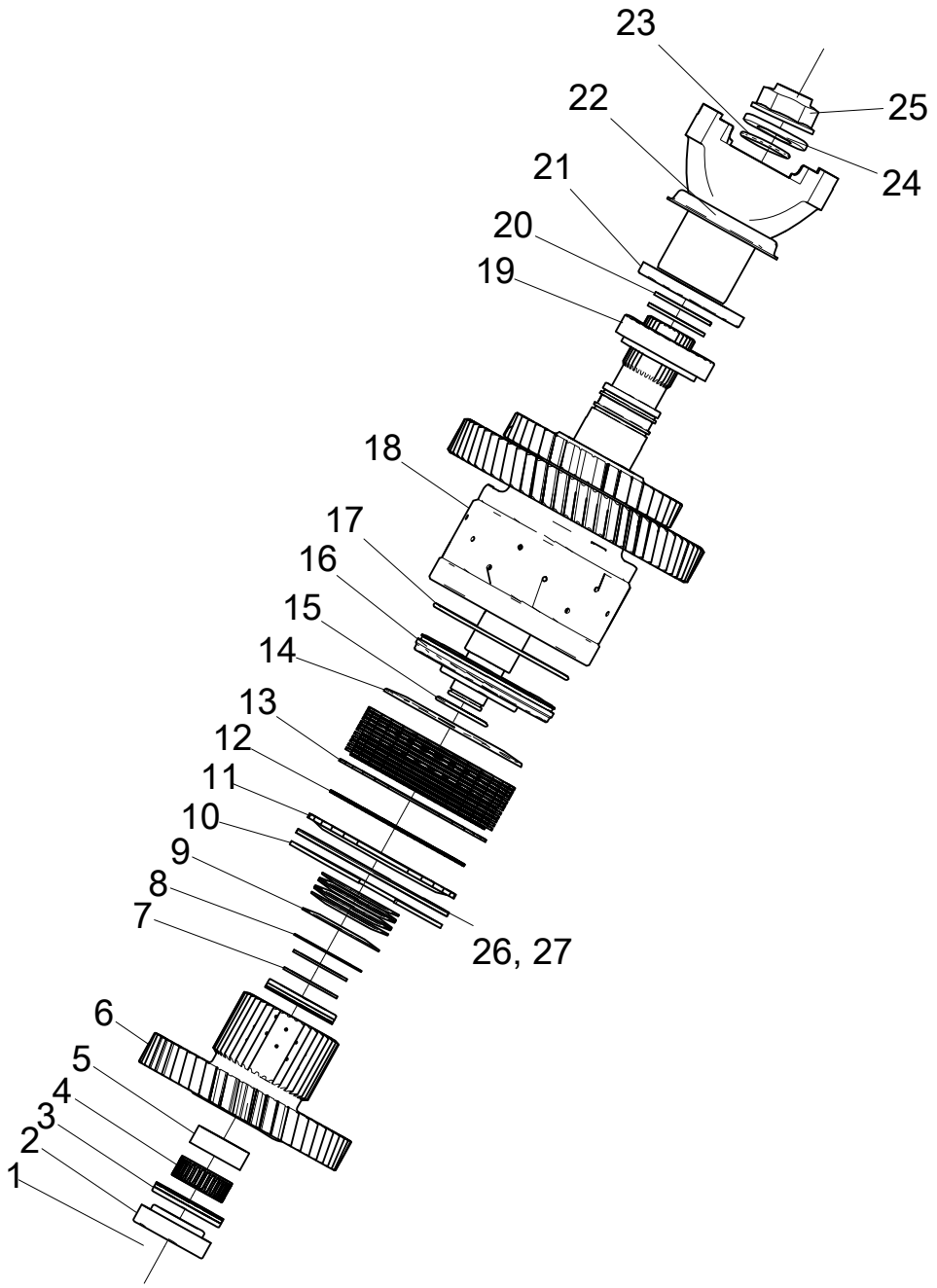

272101757 GROUP C2/O CLUTCH

272103520 TRANSMISSION

No.	PART NUMBER	QTY	NAME	NOTE	PAGE
1	**272100804**	1	SNAP RING		
2	**800556418**	1	BEARING 15126A/15245		
3	**272101772**	2	TRUST BEARING		
4	**272101769**	2	NEEDLE BEARING		
5	**272101832**	1	SEPARATE BUSH40×45×15		
6	**272101835**	1	GEAR C2/O CLUTCH		
7	**805408061**	2	SEPARATE BUSH 40×1.75	DIN471	
8	**272101829**	1	WASHER40×60×1		
9	**272101811**	7	CUP SPRING		
10	**272101838**	1	SEPARATE BUSH135×127×3		
11	**272101837**	1	PLATE END		
12	**272101830**	13	DISC OUTER		
13	**272101833**	13	DISC INNER		
14	**272101814**	1	CUP SPRING		
15	**272101770**	1	ORING40×3	MYF110.6.6-2	
16	**272101810**	1	C2/OPISTON		
17	**272101797**	1	ORING115×3	MYF110.11.3-2	
18	**272101826**	1	C2/O CLUTCH	272104521	
19	**800553899**	1	BEARING 32010	GB/T297-1994	
20	**272101831**	2	SNAP RING		
21	**803445572**	1	SHAFT SEAL		
22	**272101749**	1	OUTPUT FLANGE		
23	**803164128**	1	ORING 35.5×3.55	GB/T3452.1-1992	
24	**272102647**	1	WASHER		
25	**272102648**	1	NUT		
26	**272102006**	1	SEPARATE BUSH135×127×2.4	SELECT ASSY	
27	**272102005**	1	SEPARATE BUSH135×127×3.5	SELECT ASSY	

272101758 GROUP C3 CLUTCH

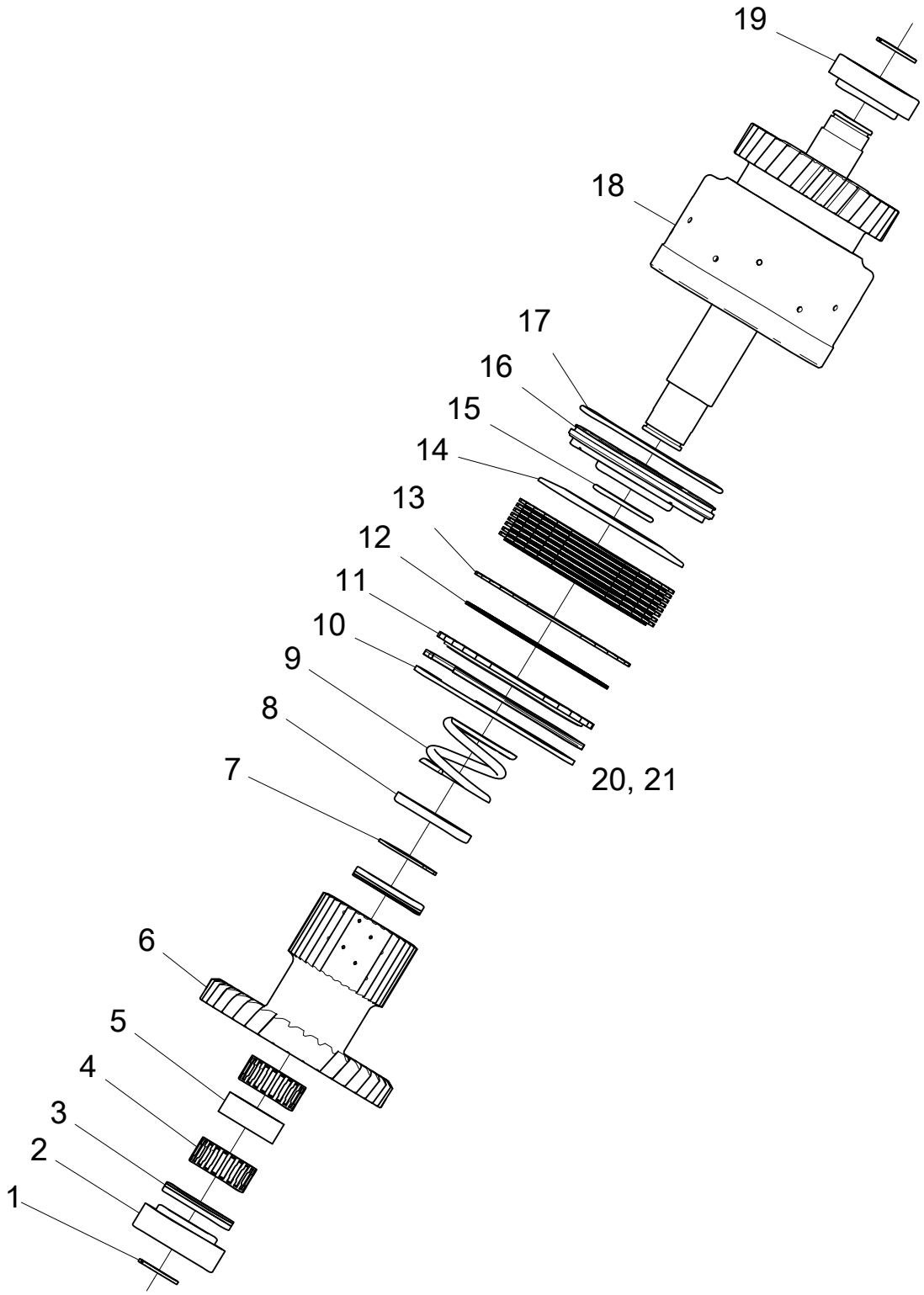

272101758 GROUP C3 CLUTCH

272103520 TRANSMISSION

No.	PART NUMBER	QTY	NAME	NOTE	PAGE
1	**272100804**	2	SNAP RING		
2	**800556409**	1	BEARING32206		
3	**272101808**	2	TRUST BEARING		
4	**272101790**	2	NEEDLE BEARING		
5	**272101802**	1	SEPARATE BUSH35×42×15		
6	**272101798**	1	GEAR C3 CLUTCH		
7	**805408061**	1	SEPARATE BUSH 40×1.75	DIN471	
8	**272101785**	1	SPRING SEAT		
9	**272101784**	1	SPING		
10	**272101844**	1	SEPARATE BUSH123×115×3		
11	**272101782**	1	PLATE END		
12	**272101771**	9	DISC OUTER		
13	**272101774**	9	DISC INNER		
14	**272101845**	1	CUP SPRING		
15	**272101770**	1	ORING40×3	MYF110.6.6-2	
16	**272101777**	1	PISTON		
17	**272101768**	1	ORING104.5×3	MYF110.6.6-3	
18	**272101804**	1	C3 CLUTCH	272104519	
19	**800556418**	1	BEARING 15126A/15245		
20	**272101994**	1	SEPARATE BUSH123×115×2.5	SELECT ASSY	
21	**272101996**	1	SEPARATE BUSH123×115×3.5	SELECT ASSY	

272101759 GROUP FA CLUTCH

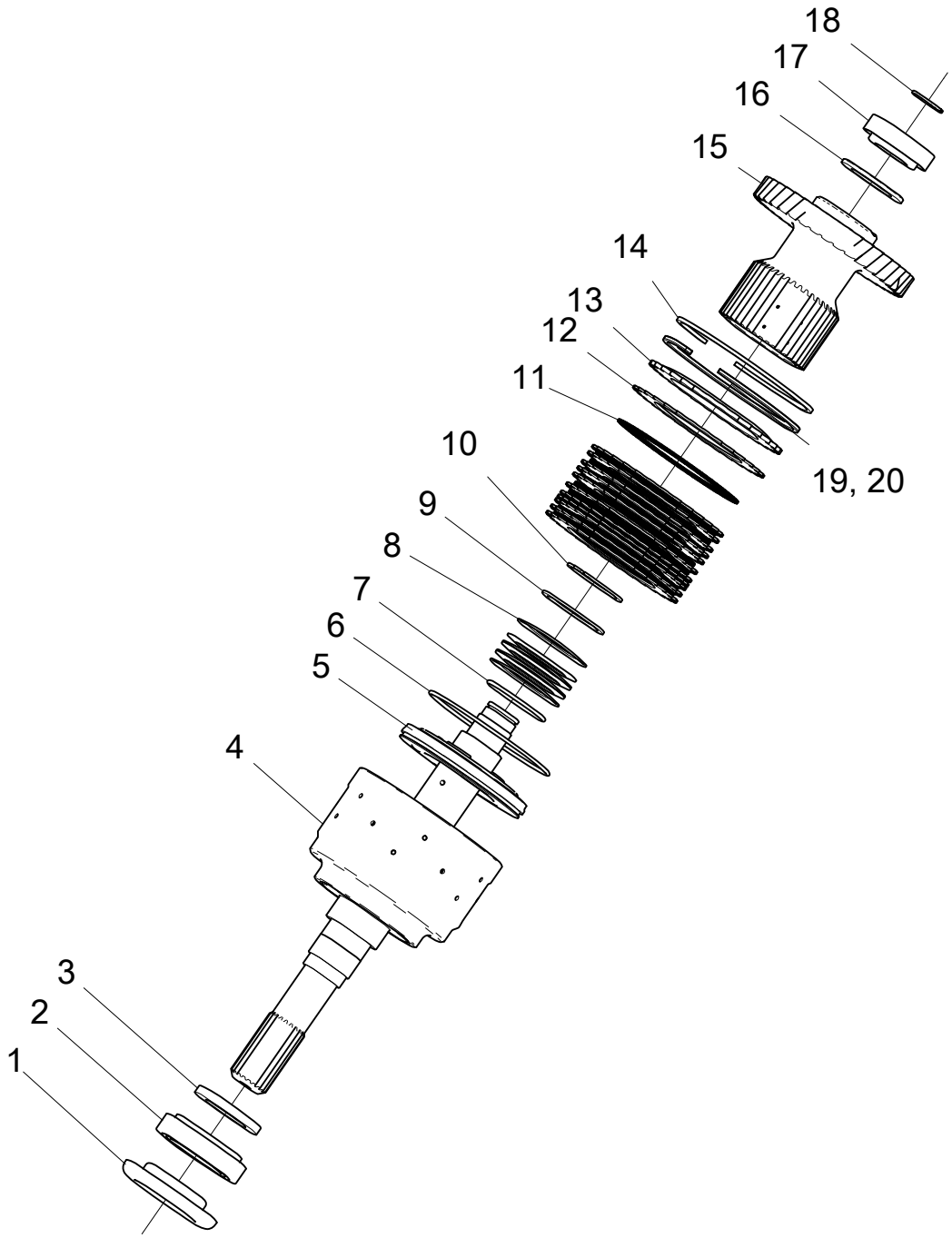

272101759 GROUP FA CLUTCH

272103520 TRANSMISSION

No.	PART NUMBER	QTY	NAME	NOTE	PAGE
1	**272101998**	1	FADUST COVER		
2	**800553899**	1	BEARING 32010	GB/T297-1994	
3	**803445571**	1	SHAFT SEAL		
4	**272101799**	1	FA CLUTCH	272104518	
5	**272101809**	1	FAPISTON ASSY		
6	**272101797**	1	ORING115×3	MYF110.11.3-2	
7	**272101793**	1	ORING52×3	MYF110.13.2-2	
8	**272101812**	7	CUP SPRING		
9	**272101792**	1	SPACER		
10	**805408031**	1	SEPARATE BUSH 50×2	DIN471	
11	**272101830**	12	DISC OUTER		
12	**272101833**	12	DISC INNER		
13	**272101837**	1	PLATE END		
14	**272101838**	1	SEPARATE BUSH135×127×3		
15	**272101791**	1	GEAR FA CLUTCH		
16	**272101847**	1	WASHER		
17	**800556418**	1	BEARING 15126A/15245		
18	**272100804**	1	SNAP RING		
19	**272102005**	1	SEPARATE BUSH135×127×3.5	SELECT ASSY	
20	**272102006**	1	SEPARATE BUSH135×127×2.4	SELECT ASSY	

272101761 GROUP UPPER INTEGRATED VALVE

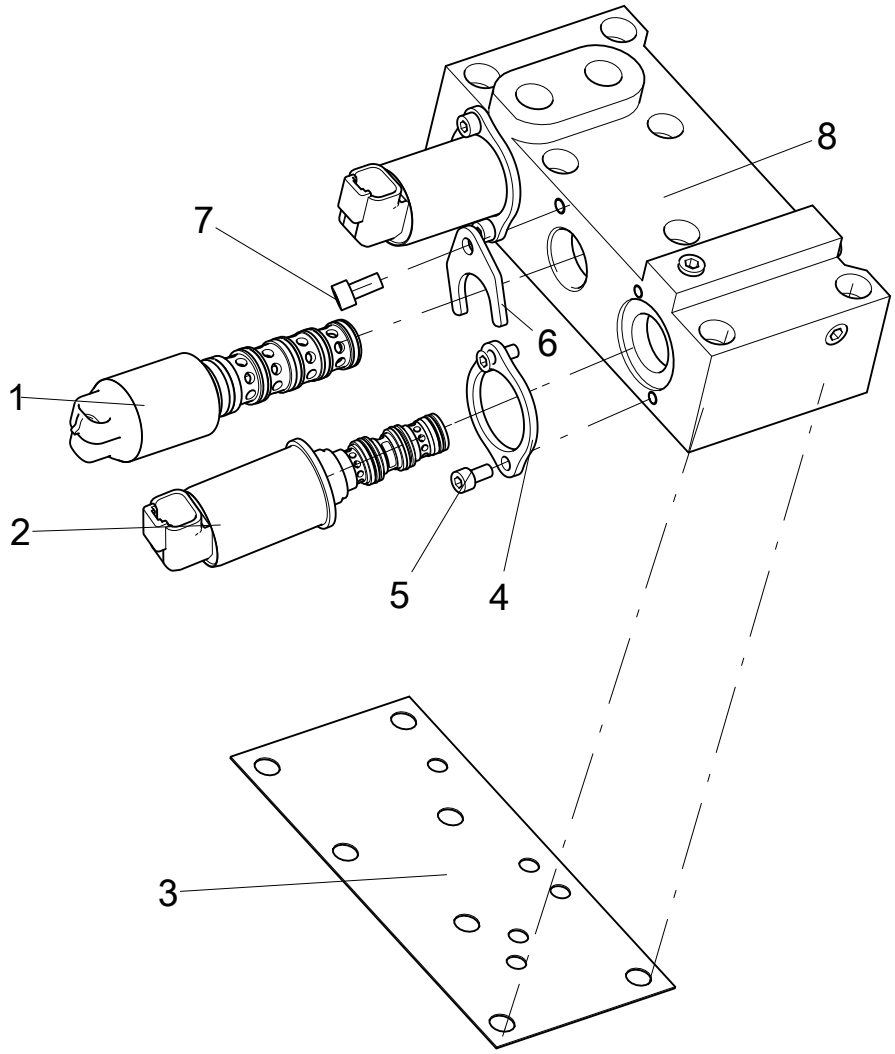

272101761 GROUP UPPER INTEGRATED VALVE

272103520 TRANSMISSION

No.	PART NUMBER	QTY	NAME	NOTE	PAGE
1	**272101883**	1	SOLENOID VALVE		
2	**272101869**	2	SOLENOID VALVE		
3	**272101874**	1	ID SEAL		
4	**272101877**	2	SPACER		
5	**805140896**	4	SCREW M5×10	GB/T70.1-2008	
6	**272102444**	1	SPACER		
7	**805140686**	1	SCREW M6×12	GB/T70.1-2008	
8	**272101868**	1	UPPER INTEGRATED VALVE		

272101762 GROUP LOWER INTEGRATED VALVE

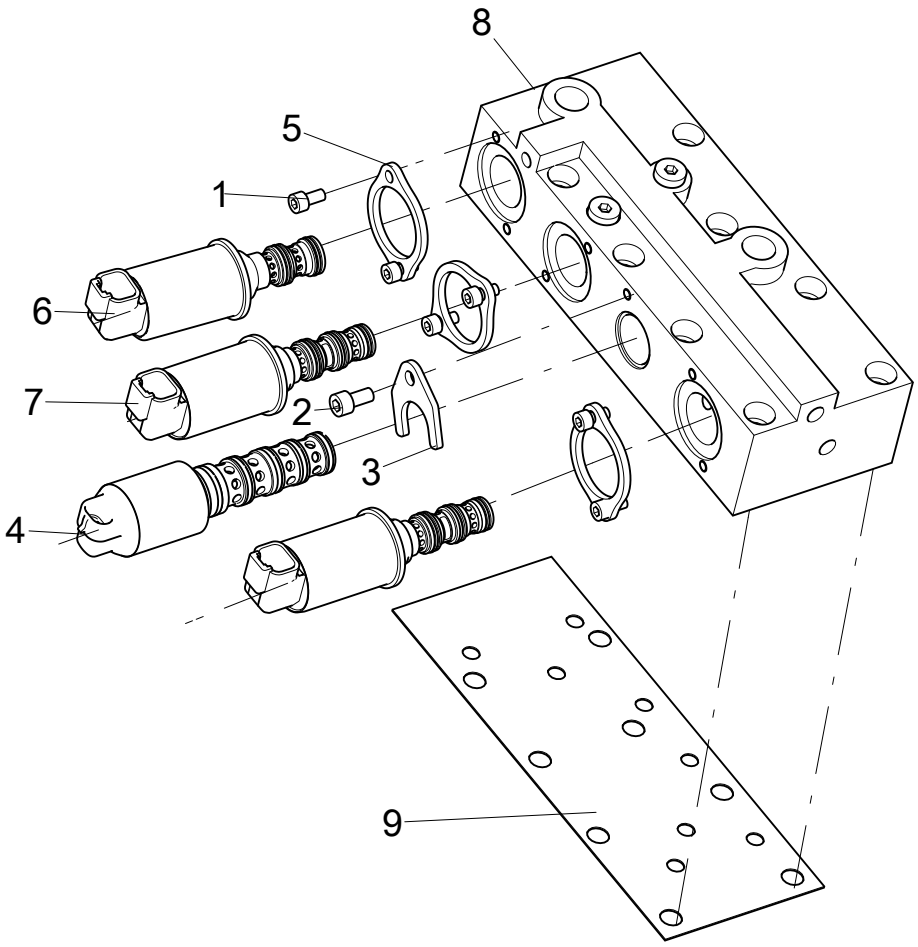

272101762 GROUP LOWER INTEGRATED VALVE

272103520 TRANSMISSION

No.	PART NUMBER	QTY	NAME	NOTE	PAGE
1	**805140896**	6	SCREW M5×10	GB/T70.1-2008	
2	**805140686**	1	SCREW M6×12	GB/T70.1-2008	
3	**272102444**	1	SPACER		
4	**272101883**	1	SOLENOID VALVE		
5	**272101877**	3	SPACER		
6	**272101872**	1	SOLENOID VALVE		
7	**272101869**	2	SOLENOID VALVE		
8	**272101876**	1	LOWER INTEGRATED VALVE		
9	**272101871**	1	ID SEAL		

272101765 HOSE ASSEMBLY

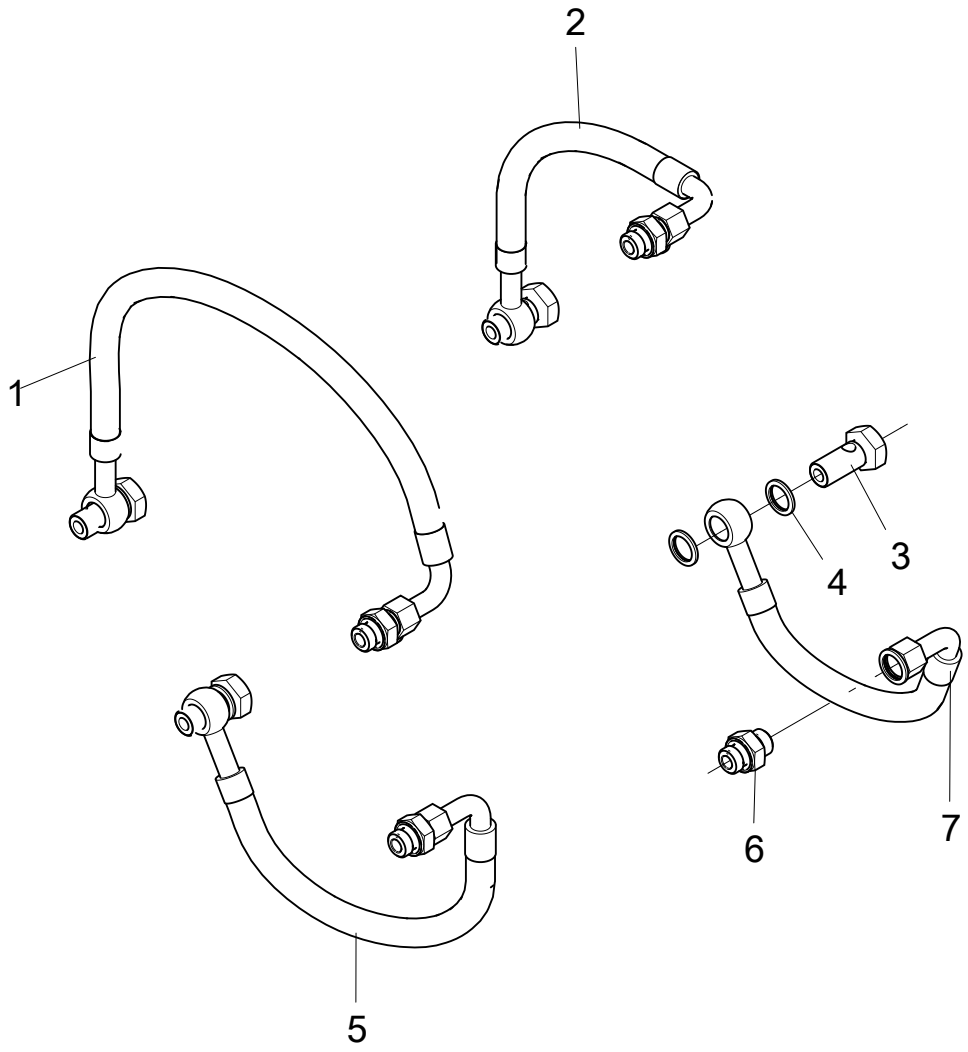

272101765 HOSE ASSEMBLY

272103520 TRANSMISSION

No.	PART NUMBER	QTY	NAME	NOTE	PAGE
1	**272101873**	1	TUBE		
2	**272101882**	1	TUBE		
3	**272100927**	4	BOLT		
4	**805300026**	8	GASKET 16	JB/T982-1977	
5	**272101881**	1	TUBE		
6	**272100934**	4	SPLICE		
7	**272101879**	1	TUBE		

272101764 FILTER

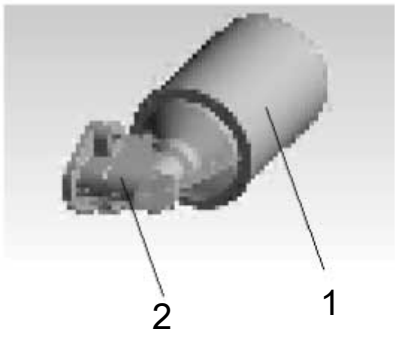

272101764 FILTER

272103520 TRANSMISSION

No.	PART NUMBER	QTY	NAME	NOTE	PAGE
1	**272102858**	1	FILTER ELEMENT	272104341	
2	**272102859**	1	FILTER SEAT		

402215011 PRESSURE GAUGE ADAPTOR ASSY

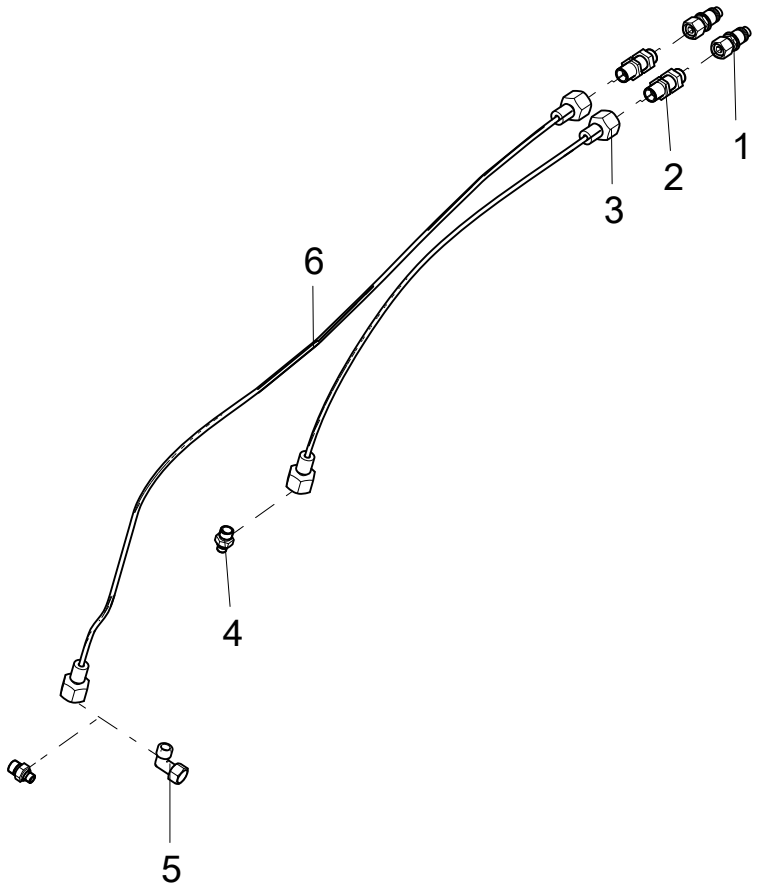

402215011 PRESSURE GAUGE ADAPTOR ASSY

402216355 TRANSMISSION ASSY

No.	PART NUMBER	QTY	NAME	NOTE	PAGE
1	**803103815**	2	SPLICE		
2	**803380805**	2	SPLICE		
3	**252906070**	1	PRESSUREMEASURE HOSE		
4	**803164420**	2	SPLICE		
5	**803103351**	1	SPLICE		
6	**252906069**	1	TEST LINE		

402216357 FRONT AXLE ASSY

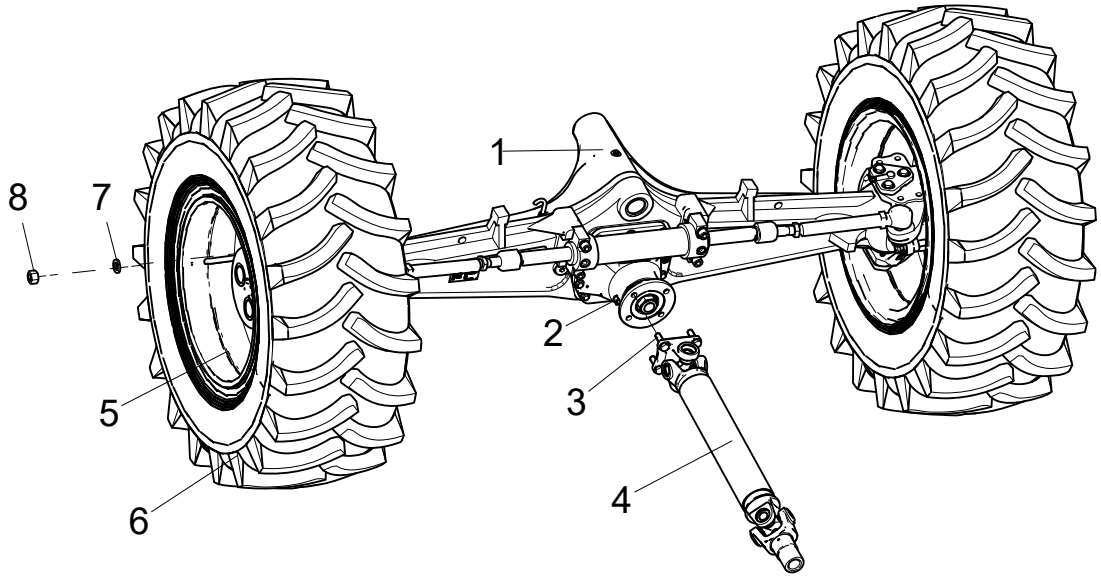

402216357 FRONT AXLE ASSY

402216353 DRIVE SHAFT

No.	PART NUMBER	QTY	NAME	NOTE	PAGE
1	**275000409**	1	FRONT AXLE ASSY		
2	**805201527**	4	NUT	GB/T889.2-2000	
3	**805002117**	4	BOLT M14×1.5×45	GB/T5785-2000	
4	**402216254**	1	SHAFT TRANSMISSION		
5	**800364308**	2	WHEEL RIM 9×18		
6	**800364307**	2	TIRE 12.5/80-18-14PR		
7	**402200875**	16	WASHER		
8	**402201303**	16	NUT		

275000409 FRONT AXLE ASSY

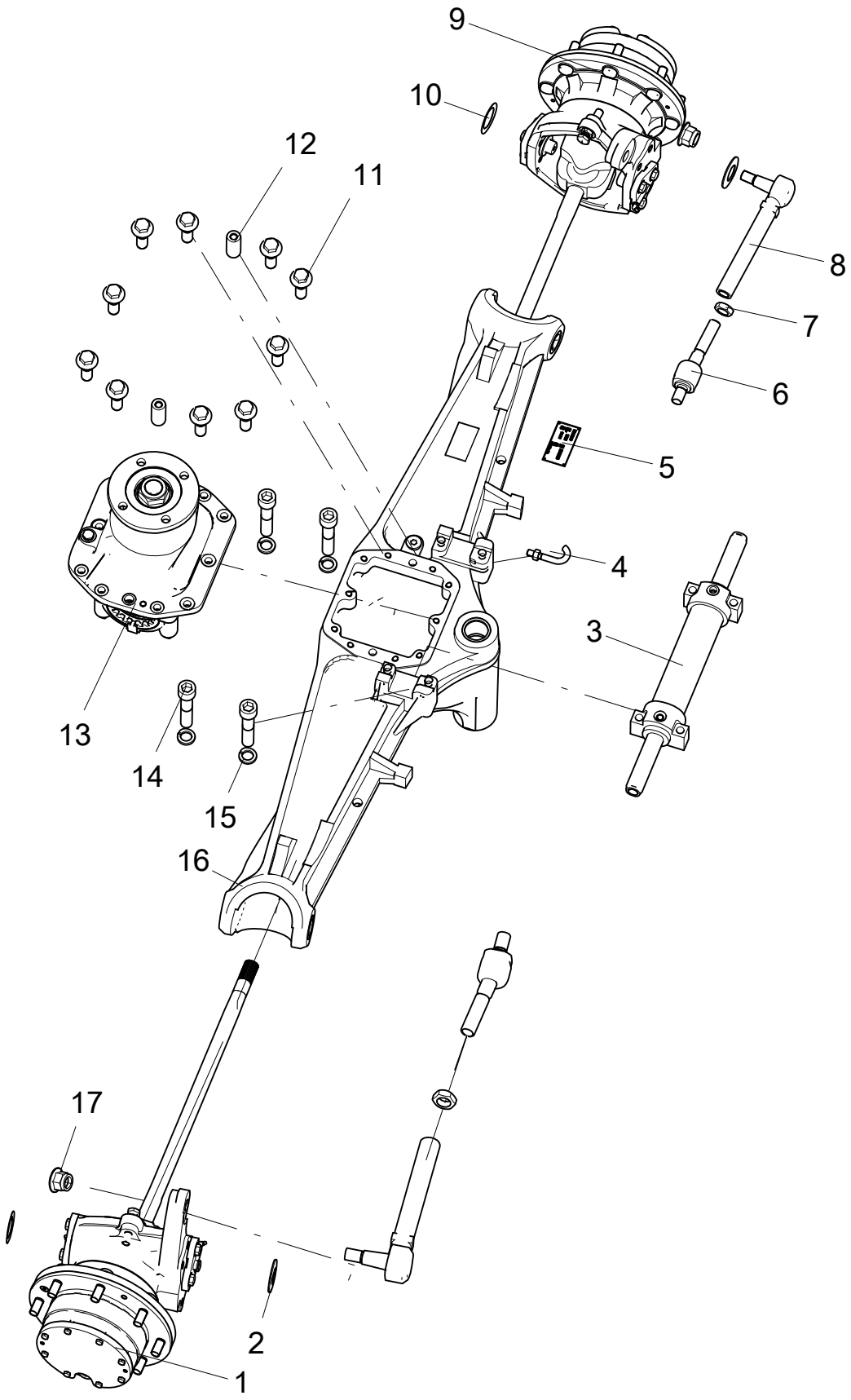

275000409 FRONT AXLE ASSY

402216357 FRONT AXLE ASSY

No.	PART NUMBER	QTY	NAME	NOTE	PAGE
1	**275000154**	1	RIGHT RIM		
2	**801737340**	2	DISK SPRING B71	GB/T1972-2005	
3	**275000161**	1	CYLINDER		
4	**275301750**	1	VENTILATION PIPE ASSY		
5	**275000404**	1	NAMEPLATE		
6	**275000180**	2	SPHERICAL HINGE		
7	**805238882**	2	NUT M24×1.5	GB/T6173-2000	
8	**275000199**	2	ARTICULATION		
9	**275000152**	1	LEFT RIM		
10	**275000187**	2	DISK SPRING		
11	**275000210**	10	BOLT WITH FLANGE		
12	**805639674**	2	PIN 16×35	GB/T120.1-2000	
13	**275000403**	1	MAIN REDUCER		
14	**805140574**	4	SCREW M16×80	GB/T70.1-2008	
15	**805300011**	4	GASKET 16	GB/T93-1987	
16	**275000157**	1	AXLE HOUSING		
17	**805239291**	2	NUT M20×1.5	GB/T6183.2-2000	

275000154 RIGHT RIM

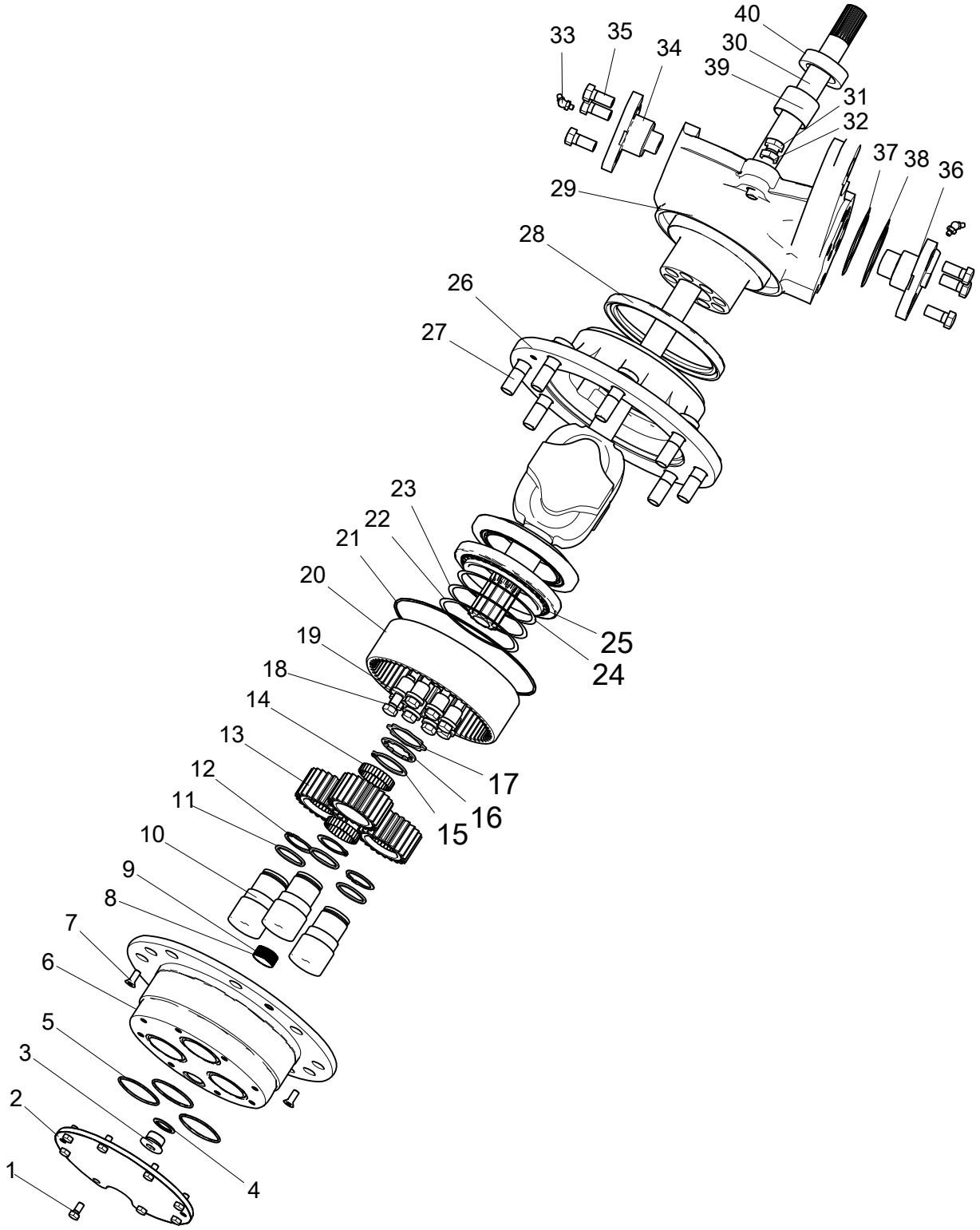

275000154 RIGHT RIM

275000409 FRONT AXLE ASSY

No.	PART NUMBER	QTY	NAME	NOTE	PAGE
1	**805046484**	8	BOLT M8×25	GB/T5783-2000	
2	**275001525**	1	STAMPED END CAP		
3	**275101797**	1	SCREW PLUG ASSY		
4	**805300107**	1	WASHER 24	JB/T982-1977	
5	**803392947**	3	ORING 58×2.65	GB/T3452.1-2005	
6	**275000195**	1	PLANET CARRIER		
7	**805141968**	2	SCREW M8×20（DACROMET）	GB/T70.3-2008	
8	**275000398**	1	PUSH PIN		
9	**275302033**	1	PUSH PIN		
10	**275000184**	3	PLANETARY SHAFT		
11	**275000155**	3	SPACER		
12	**275000147**	3	SEPARATE BUSH38		
13	**275000159**	3	GEAR PLANETARY		
14	**275000205**	168	ROLL NEDDLE		
15	**275000216**	1	SEPARATE BUSH45		
16	**275000156**	1	GASKET		
17	**275000202**	1	STEEL PIPE CUSHION		
18	**805049679**	8	BOLT M12×1.5×50	GB/T5786-2000	
19	**275000189**	8	LOCATING SLEEVE		
20	**275001456**	1	INNER RING GEAR ASSEMBLY		
21	**801139425**	1	ORING 215×2.65	GB/T3452.1-2005	
22	**275000218**	1	ADJUSTING GASKETT0.2		
23	**275000169**	1	ADJUSTING GASKETT0.1		
24	**275000158**	1	ADJUSTING GASKETT0.05		
25	**275000198**	2	BEARING37425-37625		
26	**275000177**	1	WHEEL HUB		
27	**275000165**	8	BOLT		
28	**801140276**	1	T15 OIL SEAL		

275000154 RIGHT RIM

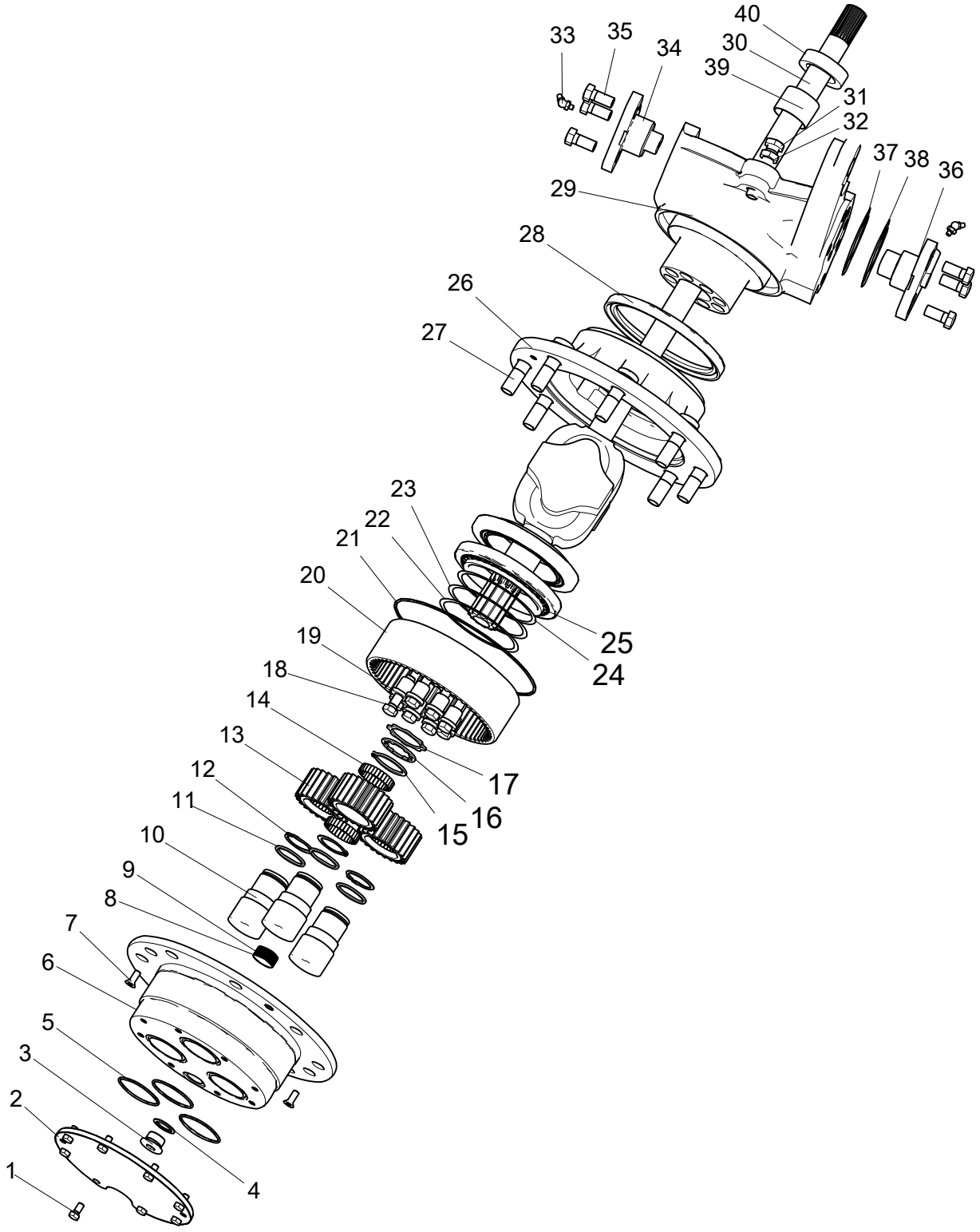

275000154 RIGHT RIM

275000409 FRONT AXLE ASSY

No.	PART NUMBER	QTY	NAME	NOTE	PAGE
29	**275000163**	1	RIGHT STEERING KNUCKLE		
30	**275000207**	1	HALF SHAFT		
31	**275000150**	1	BOLTM16×75		
32	**805200116**	1	NUT M16	GB/T6172.1-2000	
33	**801103670**	2	OIL CUP 45°M6	JB/T7940.2-1995	
34	**275000212**	1	FLANGE AXESII		
35	**805046563**	6	BOLT	GB/T5783-2000	
36	**275000297**	1	FLANGE AXES		
37	**275001030**	2	FLANGE SHAFT GASKET T0.2		
38	**275001029**	1	FLANGE SHAFT GASKET T0.5		
39	**275000204**	1	AXIS COVER50-2.5-35		
40	**275000206**	1	OIL SEAL45-65-18		

275000152 LEFT RIM

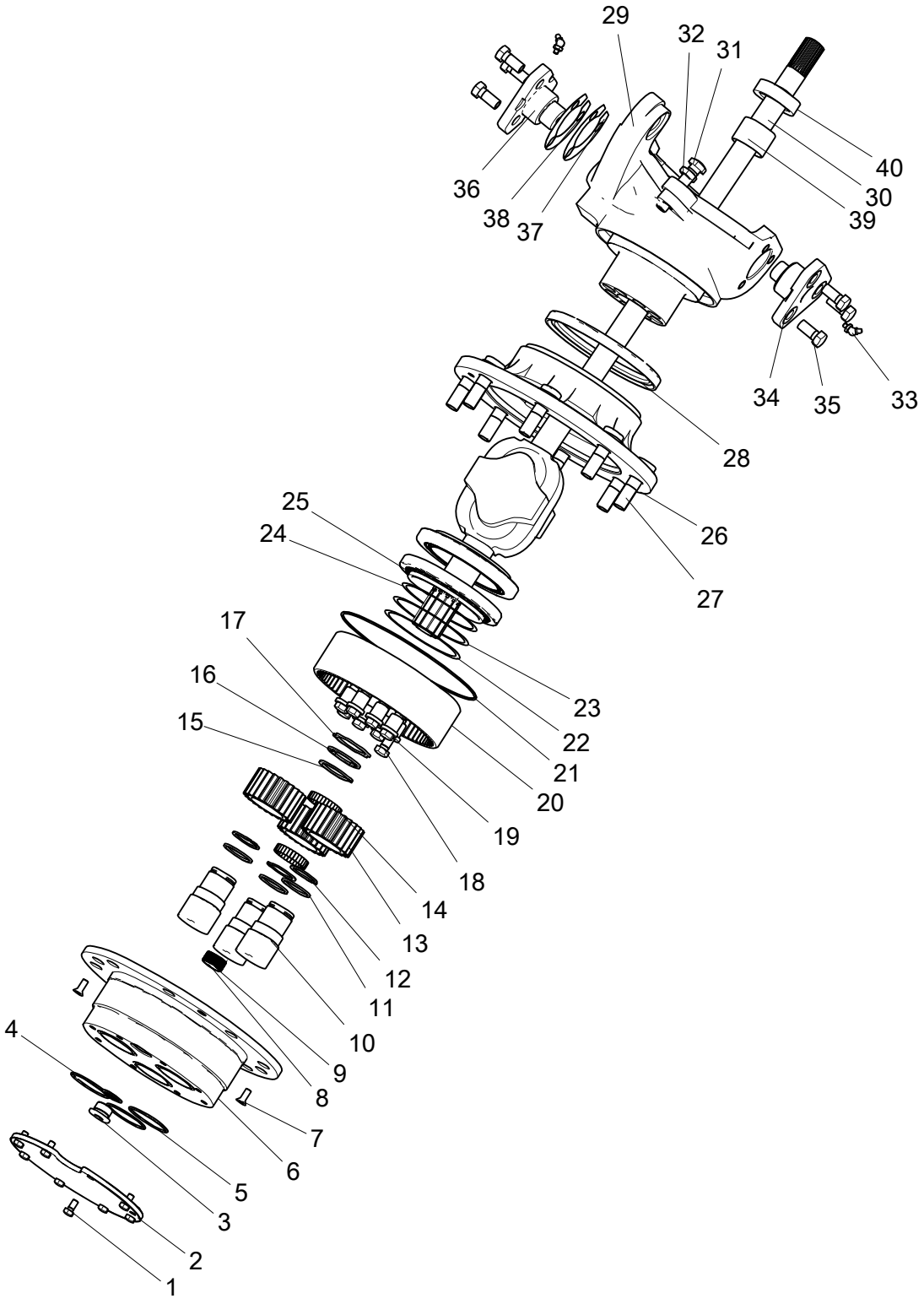

275000152 LEFT RIM

275000409 FRONT AXLE ASSY

No.	PART NUMBER	QTY	NAME	NOTE	PAGE
1	**805046484**	8	BOLT M8×25	GB/T5783-2000	
2	**275001525**	1	STAMPED END CAP		
3	**275101797**	1	SCREW PLUG ASSY		
4	**805300107**	1	WASHER 24	JB/T982-1977	
5	**803392947**	3	ORING 58×2.65	GB/T3452.1-2005	
6	**275000195**	1	PLANET CARRIER		
7	**805141968**	2	SCREW M8×20 (DACROMET)	GB/T70.3-2008	
8	**275000398**	1	PUSH PIN		
9	**275302033**	1	PUSH PIN		
10	**275000184**	3	PLANETARY SHAFT		
11	**275000155**	3	SPACER		
12	**275000147**	3	SEPARATE BUSH38		
13	**275000159**	3	GEAR PLANETARY		
14	**275000205**	168	ROLL NEDDLE		
15	**275000216**	1	SEPARATE BUSH45		
16	**275000156**	1	GASKET		
17	**275000202**	1	STEEL PIPE CUSHION		
18	**805049679**	8	BOLT M12×1.5×50	GB/T5786-2000	
19	**275000189**	8	LOCATING SLEEVE		
20	**275001456**	1	INNER RING GEAR ASSEMBLY		
21	**801139425**	1	ORING 215×2.65	GB/T3452.1-2005	
22	**275000218**	1	ADJUSTING GASKETT0.2		
23	**275000169**	1	ADJUSTING GASKETT0.1		
24	**275000158**	1	ADJUSTING GASKETT0.05		
25	**275000198**	2	BEARING37425-37625		
26	**275000177**	1	WHEEL HUB		
27	**275000165**	8	BOLT		
28	**801140276**	1	T15 OIL SEAL		

275000152 LEFT RIM

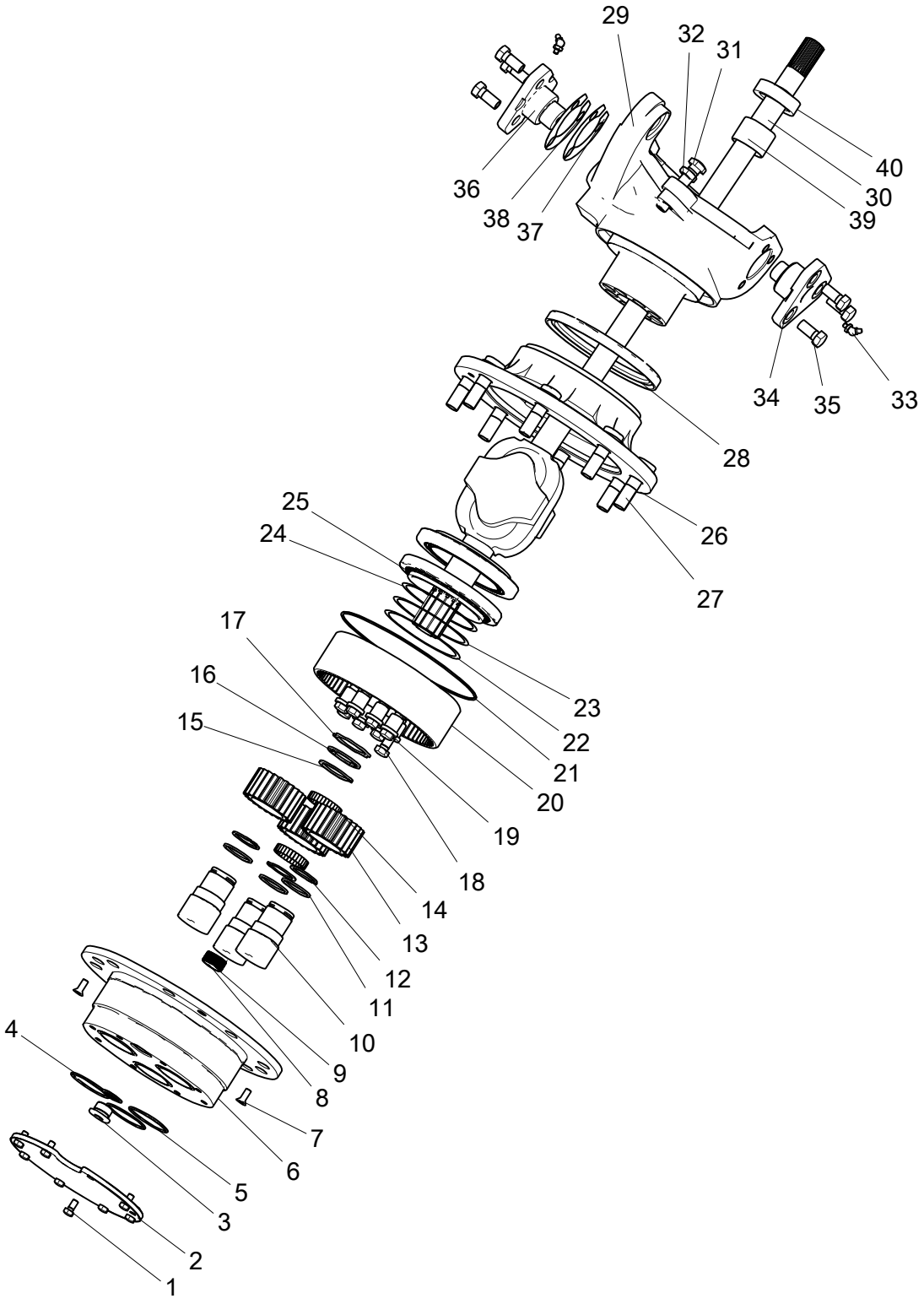

275000152 LEFT RIM

275000409 FRONT AXLE ASSY

No.	PART NUMBER	QTY	NAME	NOTE	PAGE
29	**275000183**	1	LEFT STEERING KNUCKLE		
30	**275000207**	1	HALF SHAFT		
31	**275000150**	1	BOLTM16×75		
32	**805200116**	1	NUT M16	GB/T6172.1-2000	
33	**801103670**	2	OIL CUP 45°M6	JB/T7940.2-1995	
34	**275000212**	1	FLANGE AXESII		
35	**805046563**	6	BOLT	GB/T5783-2000	
36	**275000297**	1	FLANGE AXES		
37	**275001030**	2	FLANGE SHAFT GASKET T0.2		
38	**275001029**	1	FLANGE SHAFT GASKET T0.5		
39	**275000204**	1	AXIS COVER50-2.5-35		
40	**275000206**	1	OIL SEAL45-65-18		

275000403 MAIN REDUCER

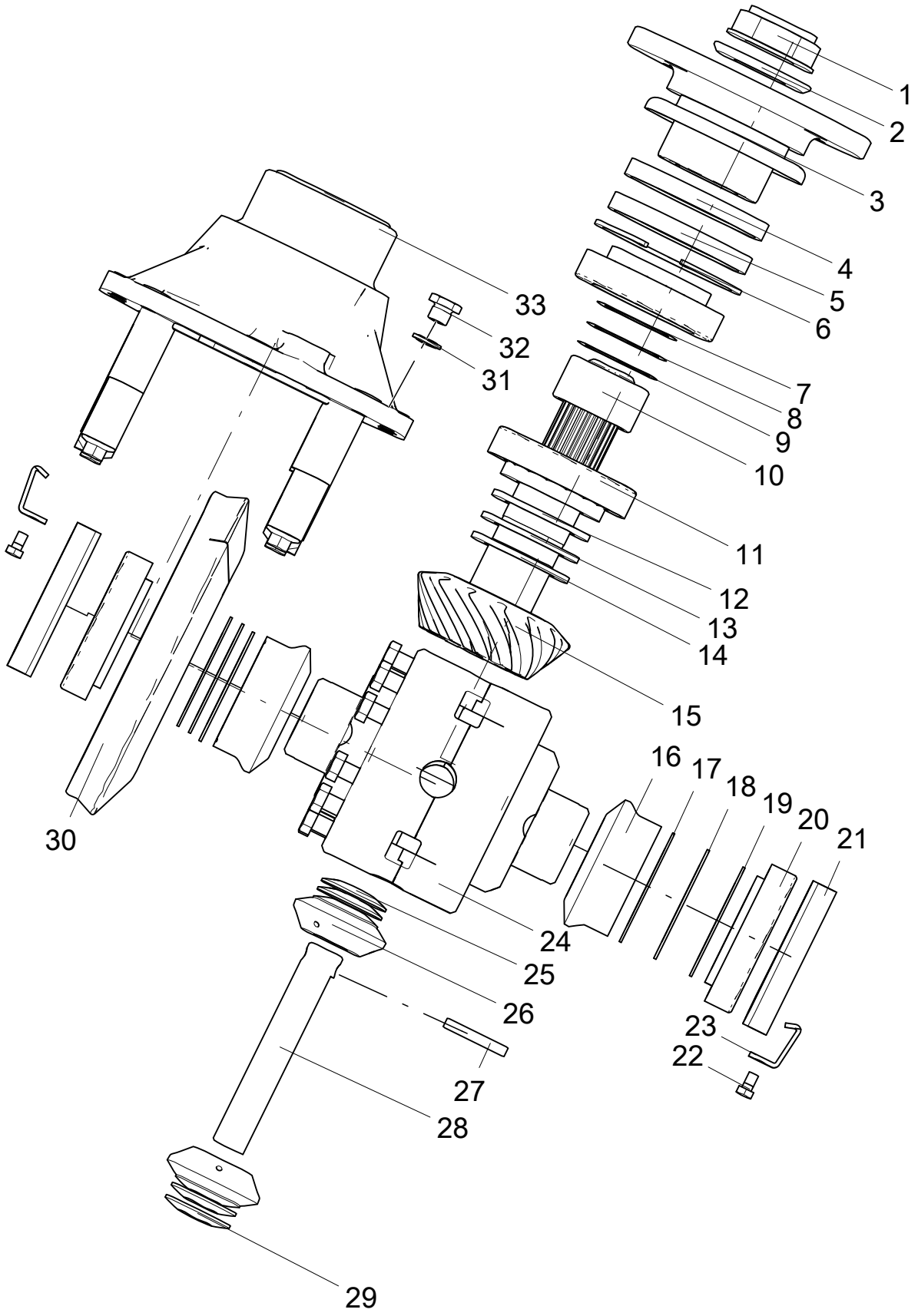

275000403 MAIN REDUCER

275000409 FRONT AXLE ASSY

No.	PART NUMBER	QTY	NAME	NOTE	PAGE
1	**275301761**	1	NUT		
2	**275301793**	1	WASHER		
3	**275000406**	1	INPUT FLANGE ASSY		
4	**803273516**	1	LIP SEAL FB65×90×10	GB/T9877-2008	
5	**803273517**	1	LIP-TYPE PACKING SEAL B65×90×10	GB/T9877-2008	
6	**805400009**	1	SEPARATE BUSH 90	GB/T893.1-1986	
7	**275000182**	1	SPACERII		
8	**275000196**	1	SPACERII		
9	**275000151**	1	SPACERII		
10	**275000170**	1	SEPARATE BUSH		
11	**800555059**	2	BEARING 31308	GB/T297-1994	
12	**275000175**	1	SPACER		
13	**275000188**	1	SPACER		
14	**275000178**	1	SPACER		
15	**275000405**	1	PINION GEAR		
16	**275000211**	2	SIDE GEAR		
17	**275000153**	2	HALF SHAFT GEAR SHIM		
18	**275000194**	2	HALF SHAFT GEAR SHIM		
19	**275000215**	2	HALF SHAFT GEAR SHIM		
20	**800501078**	2	BEARING 30210	GB/T297-1994	
21	**275000186**	2	DIFF NUT		
22	**805000638**	2	BOLT M6×10	GB/T5783-2000	
23	**275000179**	2	PLUG-IN SHEET		
24	**275000193**	1	SHELL		
25	**275000176**	2	CUSHION		
26	**275000191**	2	GEAR		
27	**805603534**	1	PIN 6×40	GB/T119.1-2000	
28	**275000200**	1	SHAFT		

275000403 MAIN REDUCER

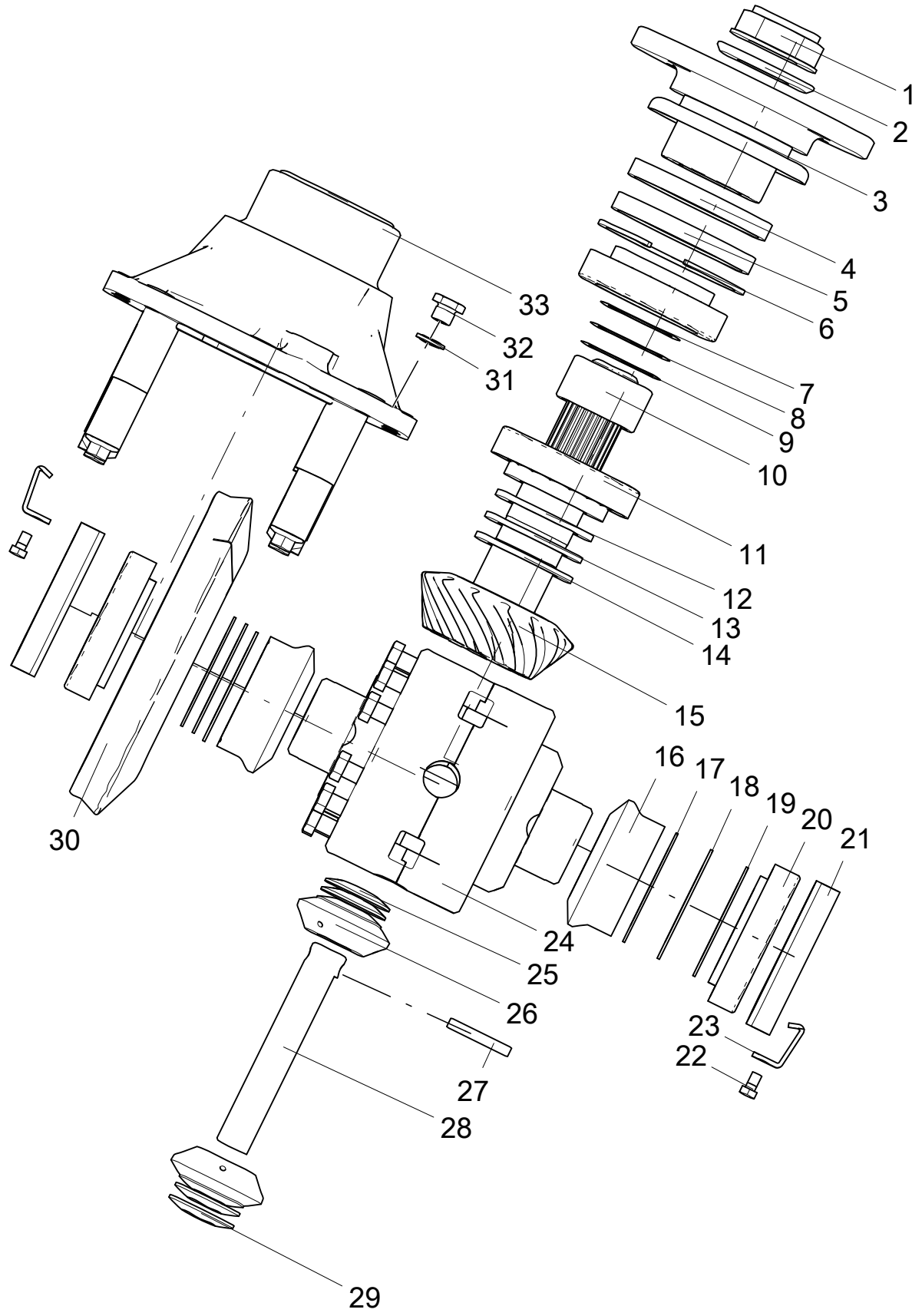

275000403 MAIN REDUCER

275000409 FRONT AXLE ASSY

No.	PART NUMBER	QTY	NAME	NOTE	PAGE
29	**275000172**	2	CUSHION		
30	**275000407**	1	RING GEAR		
31	**805300025**	1	WASHER 12	JB/T982-1977	
32	**275100121**	1	SCREW PLUGM12×1.25×9.5		
33	**275000400**	1	BRACKET		

275000157 AXLE HOUSING

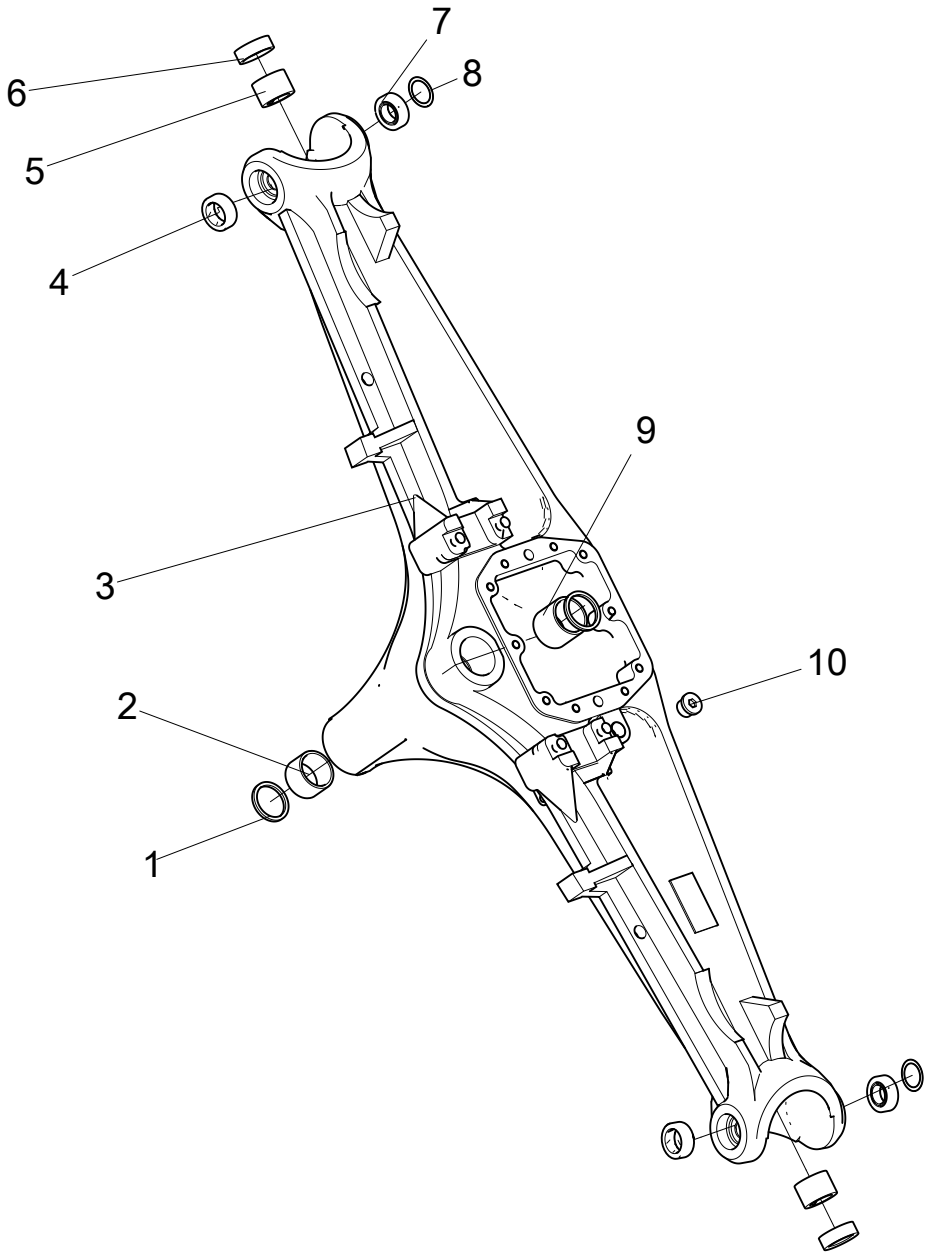

275000157 AXLE HOUSING

275000409 FRONT AXLE ASSY

No.	PART NUMBER	QTY	NAME	NOTE	PAGE
1	**275000173**	2	OIL SEAL		
2	**275000190**	1	AXIS COVER60-50-37		
3	**275000213**	1	AXLE HOUSING		
4	**275000181**	2	AXIS COVER		
5	**275000160**	2	AXIS COVER38-1.5-35		
6	**275000208**	2	OIL SEAL35-55-18		
7	**800555134**	2	OSCILLATING BEARING GE25ES GAC28S	GB/T9164-2001	
8	**275000347**	2	ADJUSTING GASKET		
9	**275000174**	1	AXIS COVER60-50-52		
10	**803110281**	1	END CAP	ED	

402216254 SHAFT TRANSMISSION

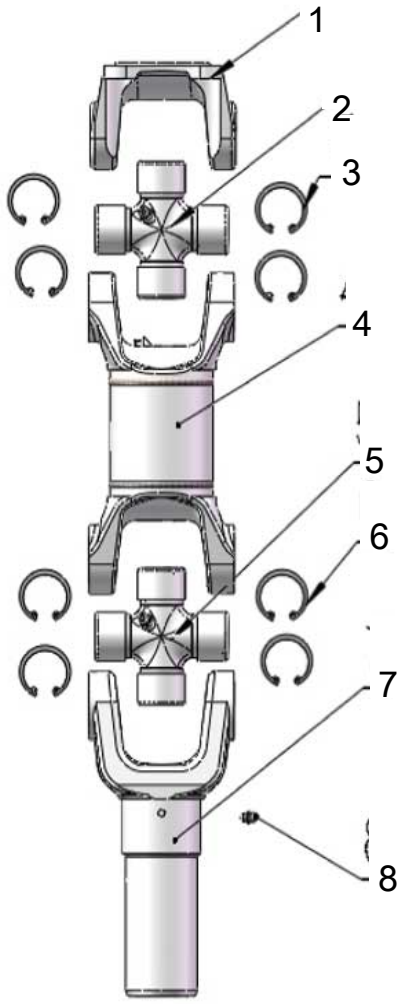

402216254 SHAFT TRANSMISSION

402216357 FRONT AXLE ASSY

No.	PART NUMBER	QTY	NAME	NOTE	PAGE
1	**860619999**	1	FLANGE YOKE		
2	**860584989**	1	UNIVERSAL JOINT		
3	**860613544**	4	CIRCLIP		
4	**860620001**	1	TUBE WELDING ASSEMBLY		
5	**860584990**	1	UNIVERSAL JOINT		
6	**860613533**	4	ELASTICITY RETAINER RING		
7	**860620000**	1	SLIDING FORK		
8	**459340292**	1	M6GREASE NIPPLE		

402216356 REAR AXLE ASSY

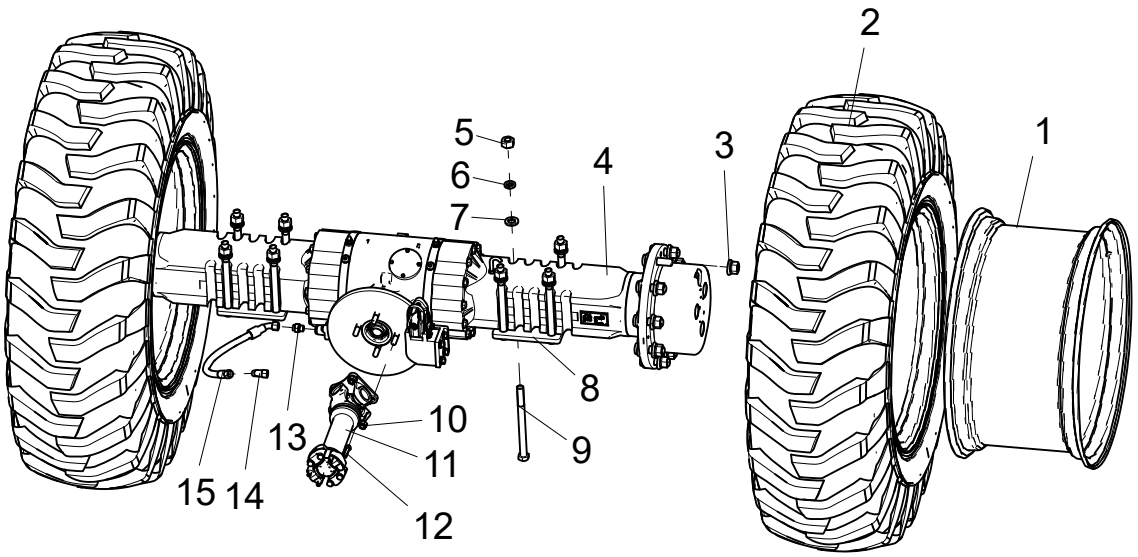

402216356 REAR AXLE ASSY

402216353 DRIVE SHAFT

No.	PART NUMBER	QTY	NAME	NOTE	PAGE
1	**800339757**	2	WHEEL RIM		
2	**800345399**	2	TIRE		
3	**275300202**	20	NUT		
4	**275000410**	1	REAR ALXE ASSY		
5	**805203510**	8	NUT M20	GB/T1229-2006	
6	**805300101**	8	WASHER 20	GB/T7244-1987	
7	**805300134**	8	WASHER 20	GB/T1230-2006	
8	**402207940**	2	BASE PLATE		
9	**805048749**	8	BOLT M20×250	GB/T5782-2000	
10	**805201527**	4	NUT	GB/T889.2-2000	
11	**800369595**	1	SHAFT TRANSMISSION		
12	**805051244**	4	BOLT M10×1.25×45	GB/T5786-2016	
13	**803103852**	1	SPLICE		
14	**803406986**	1	SPLICE		
15	**803385800**	1	HOSE ASSEMBLY		

275000410 REAR ALXE ASSY

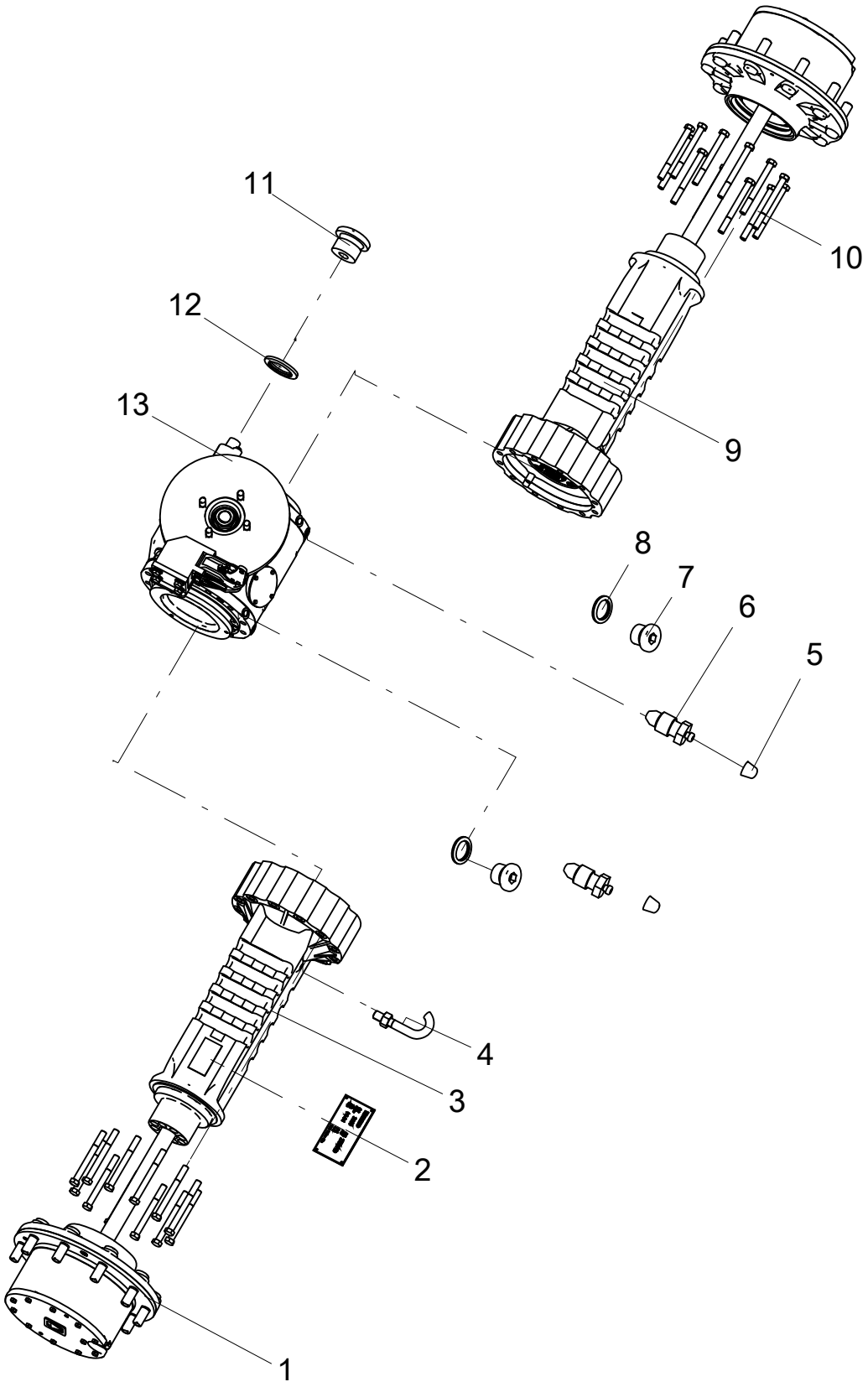

275000410 REAR ALXE ASSY

402216356 REAR AXLE ASSY

No.	PART NUMBER	QTY	NAME	NOTE	PAGE
1	**275000262**	1	PLANETARY		
2	**275000402**	1	NAMEPLATE		
3	**275000241**	1	AXLE HOUSING		
4	**275301750**	1	VENTILATION PIPE ASSY		
5	**275300113**	1	VALVE BONNET		
6	**275300114**	1	VALVE		
7	**803107839**	2	PLUG SCREW	JB/T1001-1977	
8	**805300026**	2	GASKET 16	JB/T982-1977	
9	**275000277**	1	AXLE HOUSING		
10	**805049638**	24	BOLT M14×140	GB/T5782-2000	
11	**803107804**	1	SCREW PLUG M18×1.5	JB/T1001-1977	
12	**805300044**	1	WASHER 18	JB/T982-1977	
13	**275000401**	1	MAIN REDUCER		

275000262 PLANETARY

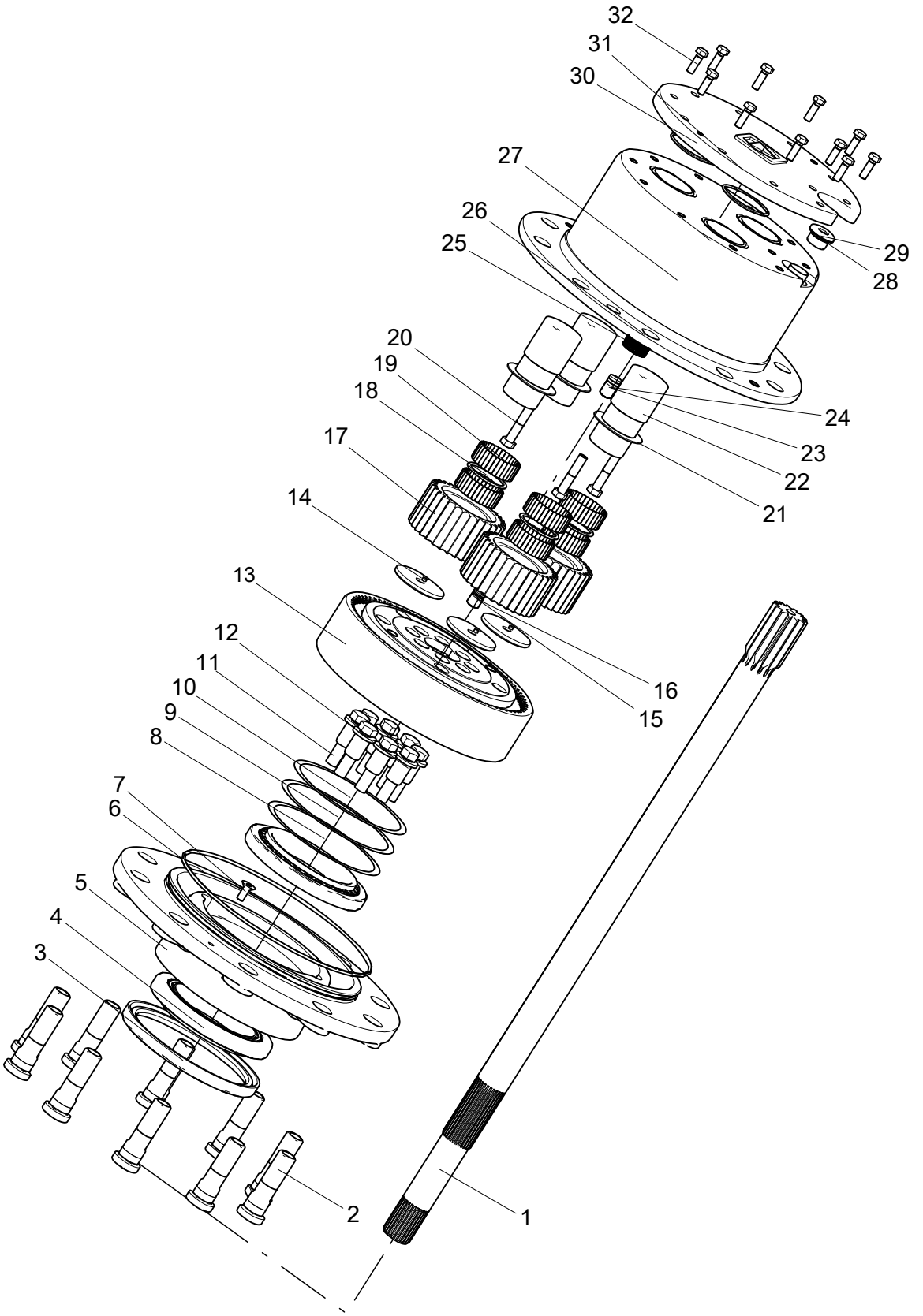

275000262 PLANETARY

275000410 REAR ALXE ASSY

No.	PART NUMBER	QTY	NAME	NOTE	PAGE
1	**275000287**	1	GEAR-SUN		
2	**275000254**	10	BOLT		
3	**801140276**	1	T15 OIL SEAL		
4	**275000198**	2	BEARING37425-37625		
5	**275000282**	1	WHEEL HUB		
6	**275000293**	1	O-RING		
7	**805141968**	2	SCREW M8×20（DACROMET）	GB/T70.3-2008	
8	**275000158**	1	ADJUSTING GASKETT0.05		
9	**275000169**	1	ADJUSTING GASKETT0.1		
10	**275000218**	1	ADJUSTING GASKETT0.2		
11	**805048803**	8	BOLT M14×1.5×60	GB/T5785-2000	
12	**275000278**	8	LOCATING SLEEVE		
13	**275001457**	1	INNER RING GEAR ASSEMBLY		
14	**275000228**	3	COVER		
15	**275000269**	1	ADJUSTING PILLAR		
16	**275000244**	1	ADJUSTING PILLAR		
17	**275000236**	3	GEAR PLANETARY		
18	**275000271**	3	SEPARATE BUSH		
19	**275000253**	186	ROLL NEDDLE		
20	**805046615**	3	BOLT M10×50	GB/T5782-2000	
21	**275000260**	3	SPACER		
22	**275000223**	3	PLANETARY SHAFT		
23	**275000275**	1	ADJUSTING PILLAR		
24	**275000376**	1	ADJUSTING PILLAR		
25	**275000398**	1	PUSH PIN		
26	**275302033**	1	PUSH PIN		
27	**275000234**	1	PLANET CARRIER		
28	**275101797**	1	SCREW PLUG ASSY		

275000262 PLANETARY

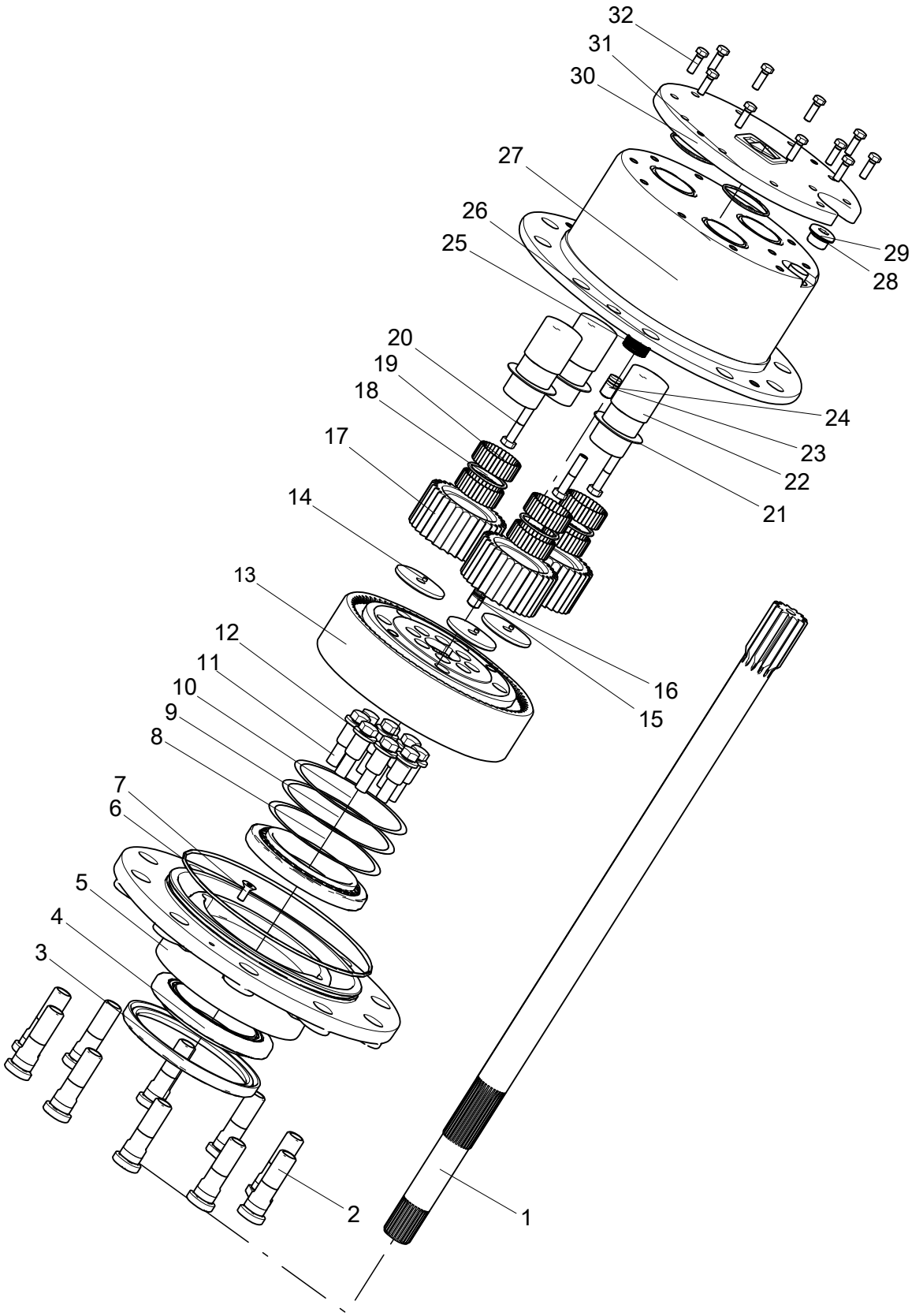

275000262 PLANETARY

275000410 REAR ALXE ASSY

No.	PART NUMBER	QTY	NAME	NOTE	PAGE
29	**805300107**	1	WASHER 24	JB/T982-1977	
30	**803392947**	3	ORING 58×2.65	GB/T3452.1-2005	
31	**275000419**	1	COVER		
32	**805046484**	11	BOLT M8×25	GB/T5783-2000	

275000241 AXLE HOUSING

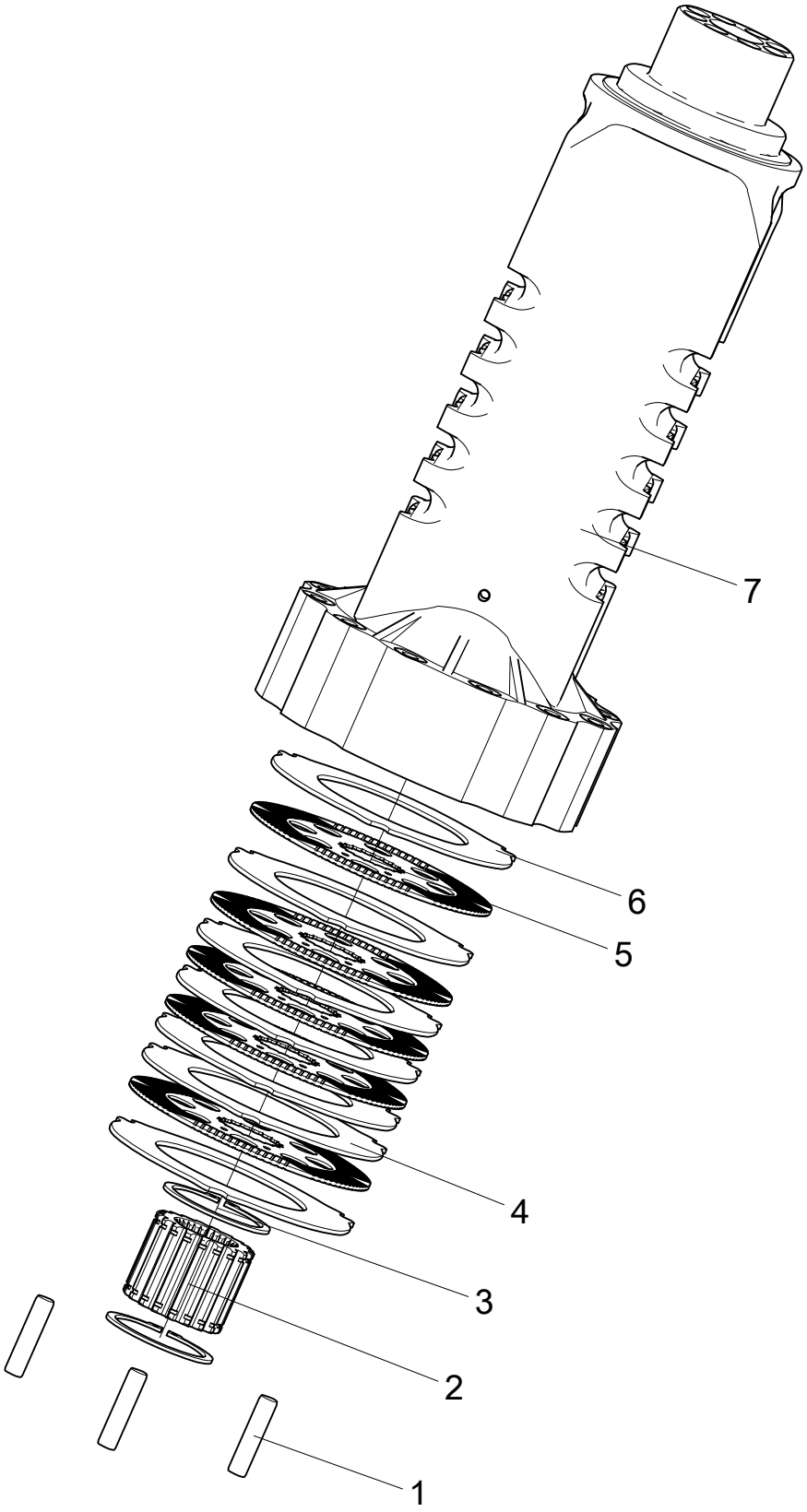

275000241 AXLE HOUSING

275000410 REAR ALXE ASSY

No.	PART NUMBER	QTY	NAME	NOTE	PAGE
1	**805639673**	3	PIN 16×70	GB/T120.1-2000	
2	**275000237**	1	SPLINE SLEEVE		
3	**805400008**	2	RETAINING RING	GB/T894.1-1986	
4	**275000397**	1	DRVIVE PLATE		
5	**275000299**	5	DRIVE PLATE		
6	**275000239**	6	DRIVEN SHEET		
7	**275000296**	1	BRIDGE BODY		

275000277 AXLE HOUSING

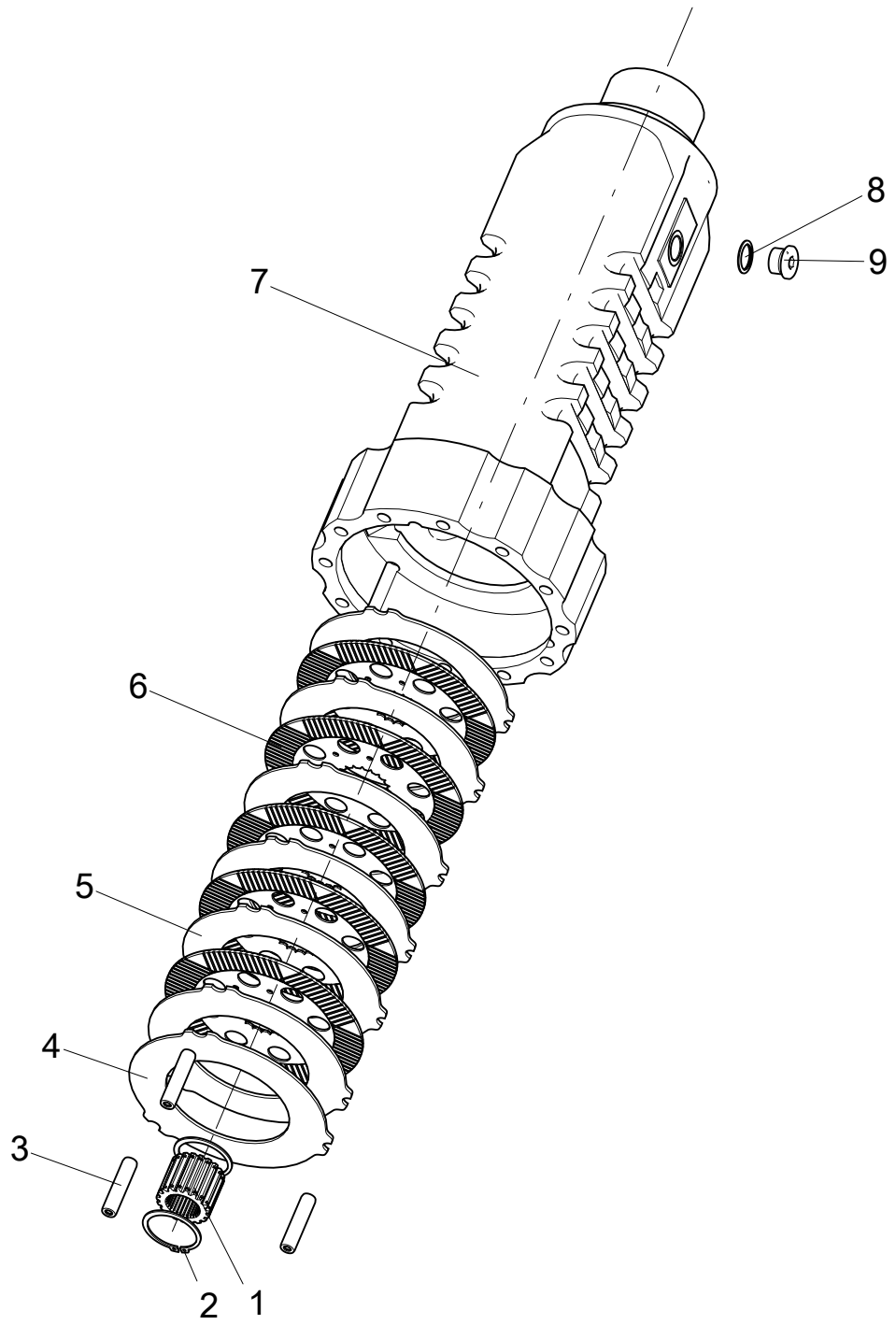

275000277 AXLE HOUSING

275000410 REAR ALXE ASSY

No.	PART NUMBER	QTY	NAME	NOTE	PAGE
1	**275000237**	1	SPLINE SLEEVE		
2	**805400008**	2	RETAINING RING	GB/T894.1-1986	
3	**805639673**	3	PIN 16×70	GB/T120.1-2000	
4	**275000397**	1	DRVIVE PLATE		
5	**275000239**	6	DRIVEN SHEET		
6	**275000299**	5	DRIVE PLATE		
7	**275000294**	1	BRIDGE BODY		
8	**805300038**	1	WASHER 27	JB/T982-1977	
9	**803163976**	1	SCREW PLUG	JB/T1001-1977	

275000401 MAIN REDUCER

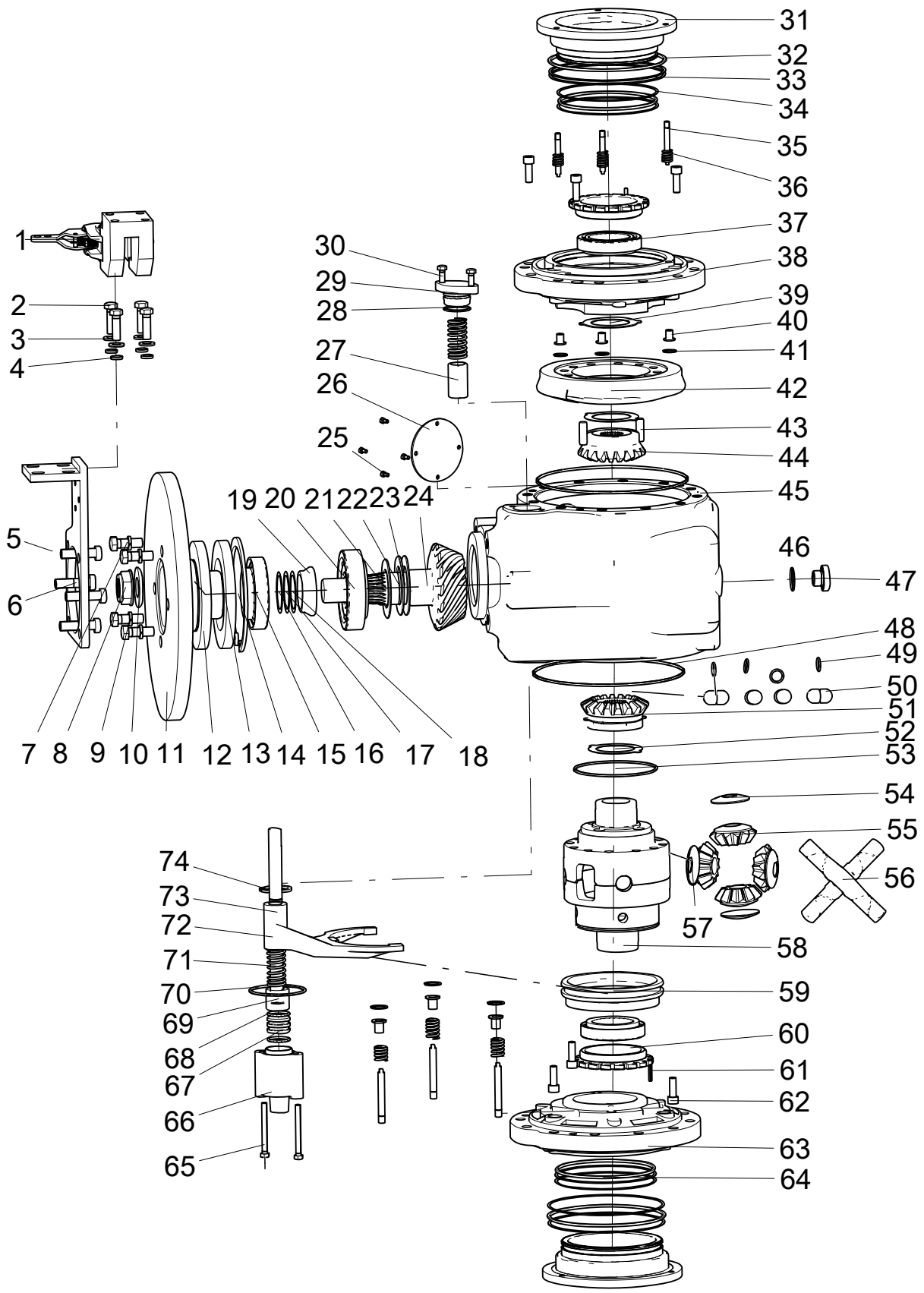

275000401 MAIN REDUCER

275000410 REAR ALXE ASSY

No.	PART NUMBER	QTY	NAME	NOTE	PAGE
1	**275000227**	1	310BRAKING		
2	**805006287**	4	BOLT M12×40	GB/T5783-2000	
3	**805338280**	4	WASHER 12	GB/T97.1-2002	
4	**805338261**	4	WASHER 12	GB/T93-1987	
5	**275000285**	1	BRAKE SUPPORT		
6	**275000268**	4	BOLT		
7	**805048198**	4	BOLT M14×1.5×40	GB/T5783-2000	
8	**275301761**	1	NUT		
9	**805338262**	4	SPRING WASHER 14	GB/T93-1987	
10	**275301793**	1	WASHER		
11	**275000233**	1	FLANGE		
12	**803381515**	1	LIP-TYPE PACKING SEAL FB60×90×8		
13	**275000292**	1	LIP-TYPE PACKING SEAL B60×90×8		
14	**805400009**	1	SEPARATE BUSH 90	GB/T893.1-1986	
15	**800555059**	1	BEARING 31308	GB/T297-1994	
16	**275000182**	1	SPACERII		
17	**275000196**	1	SPACERII		
18	**275000151**	1	SPACERII		
19	**275000221**	1	SEPARATE BUSH		
20	**800511343**	1	BEARING 30309	GB/T297-1994	
21	**275000266**	1	SPACER		
22	**275000270**	1	SPACER		
23	**275000259**	1	SPACER		
24	**275000412**	1	PINION GEAR		
25	**805047700**	4	BOLT M5×10	GB/T5783-2000	
26	**275000272**	1	COVER		
27	**275000219**	1	BEARING		
28	**803176602**	1	ORING 37.5×2.65	GB/T3452.1-2005	

275000401 MAIN REDUCER

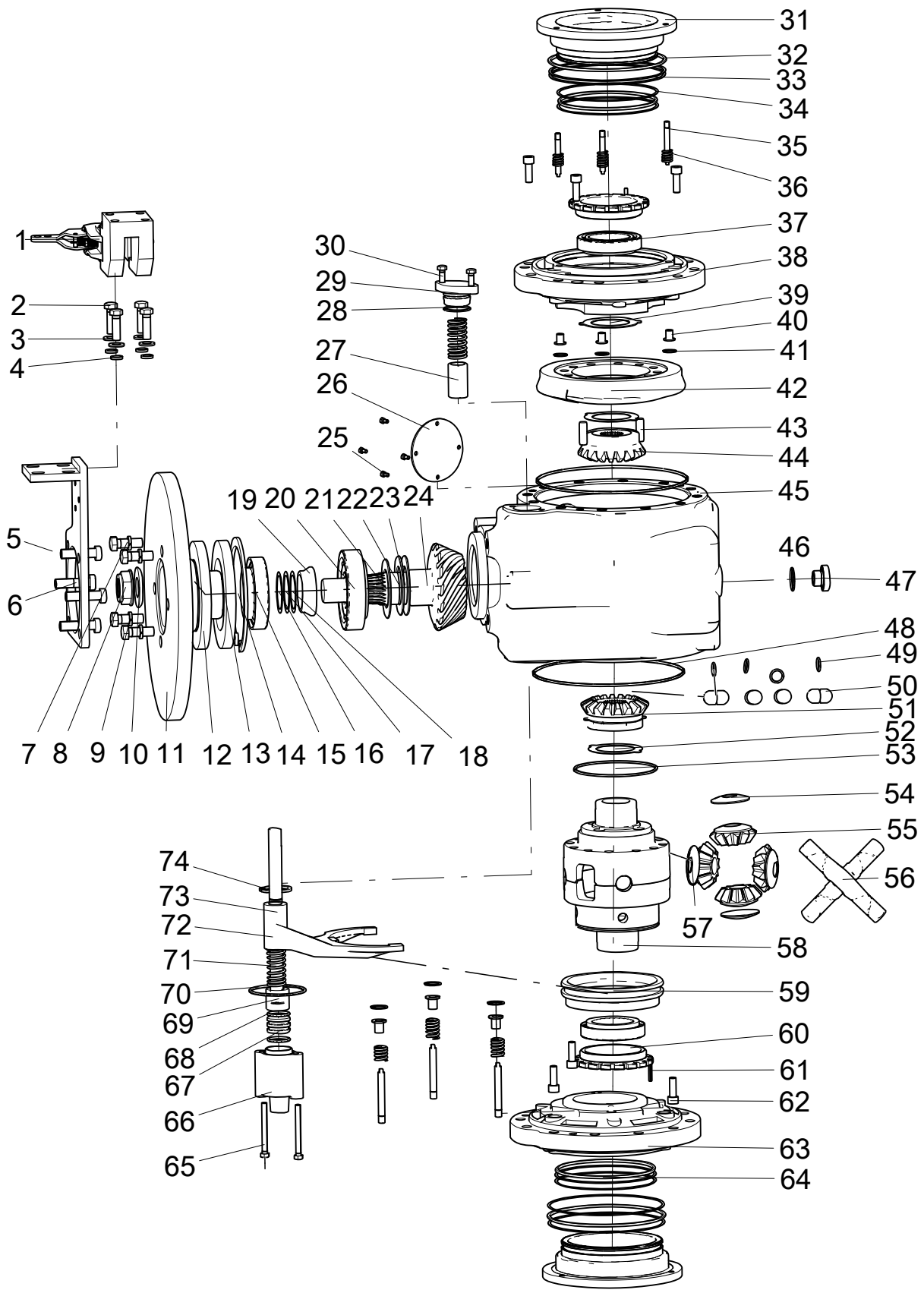

275000401 MAIN REDUCER

275000410 REAR ALXE ASSY

No.	PART NUMBER	QTY	NAME	NOTE	PAGE
29	**275000302**	1	COVER		
30	**805046510**	2	BOLT M8×30(DACROMET)	GB/T5783-2000	
31	**805403003**	6	HOLD WASHER 20	GB/T893.1-1986	
32	**275000246**	2	PISTON		
33	**275000291**	2	STAR-SHAPED SEALING RING177.39×3.53		
34	**275000289**	4	SEPARATE BUSH176.4×182.7×1.4		
35	**275000290**	4	SEPARATE BUSH158.5×152.2×1.4		
36	**805600253**	2	PIN 5×30	GB/T879.1-2000	
37	**800513645**	2	BEARING 32013	GB/T297-1994	
38	**275000251**	1	BRAKE HOUSING		
39	**275000229**	2	HALF SHAFT GEAR SHIM		
40	**275000408**	1	RING GEAR		
41	**275000267**	1	SIDE GEAR		
42	**805600248**	2	PIN 12×35	GB/T119.1-2000	
43	**275000240**	1	MAIN SPEED REDUCER SHELL		
44	**275300205**	2	O-RING		
45	**803303481**	1	O-RING	GB/T3452.1-2005	
46	**275000243**	2	HALF SHAFT GEAR SHIM		
47	**275102320**	1	SCREW PLUG ASSY		
48	**275000242**	1	SIDE GEAR		
49	**801138408**	4	ORING 11.2×1.8	GB/T3452.1-2005	
50	**275000273**	1	SEPARATE BUSH		
51	**275000263**	4	LOCK PIN		
52	**275000250**	4	CUSHION		
53	**275000264**	4	GEAR		
54	**275000256**	1	SHELL		
55	**275000230**	2	SHAFT		
56	**275000220**	4	CUSHION		

275000401 MAIN REDUCER

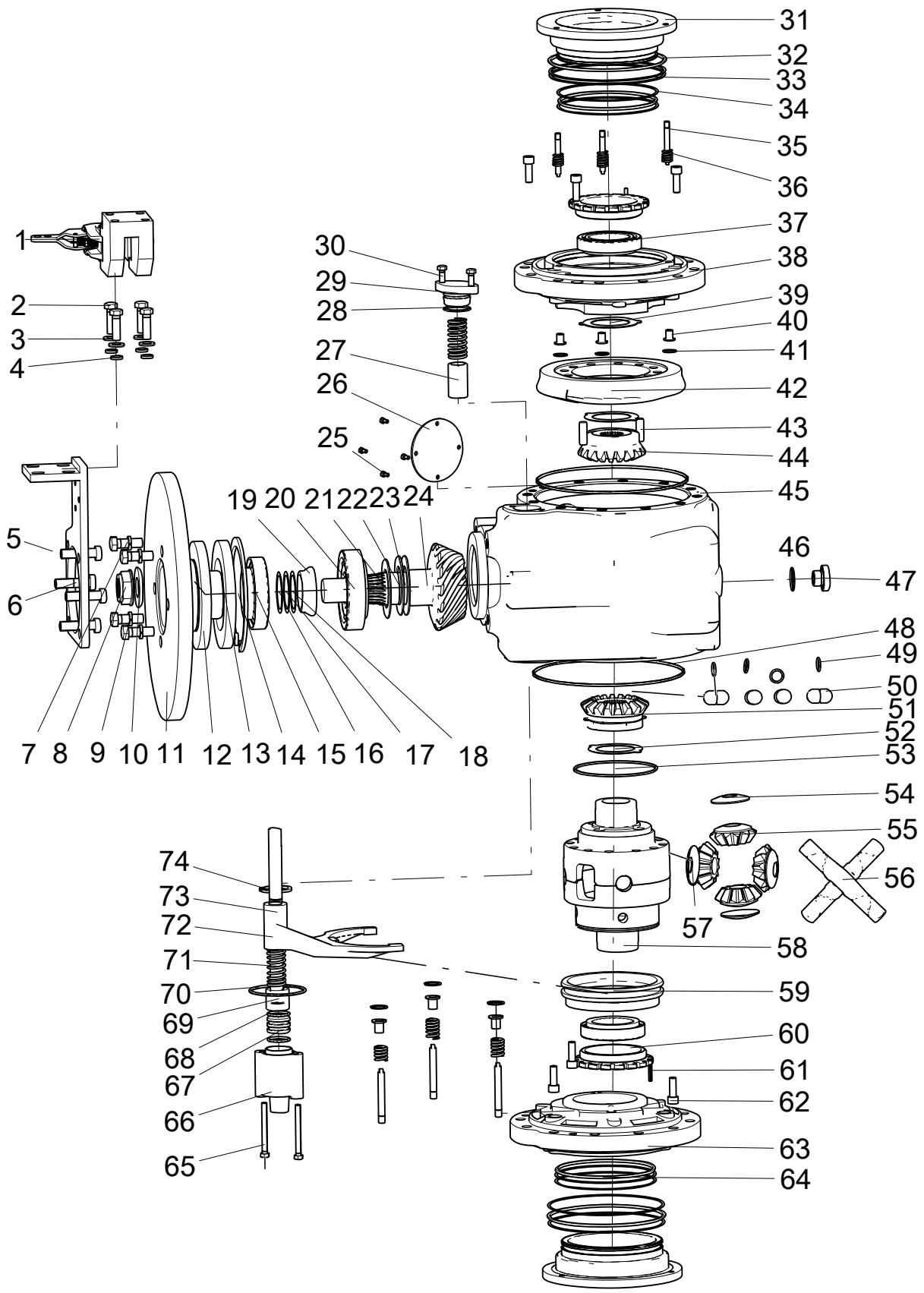

275000401 MAIN REDUCER

275000410 REAR ALXE ASSY

No.	PART NUMBER	QTY	NAME	NOTE	PAGE
57	**275000247**	1	AXIS COVER		
58	**275000226**	2	DIFF NUT		
59	**805139764**	6	SCREW M10×30(DACROMET)	GB/T70.1-2008	
60	**275000286**	1	BRAKE HOUSING		
61	**275000288**	2	STAR-SHAPED SEALING RING148.82×3.53		
62	**275000281**	6	ROD		
63	**275000261**	6	SEPARATE BUSH		
64	**275000284**	6	SPING		
65	**275000232**	1	TRIP FORK		
66	**801134068**	2	ORING 29×3.55	GB/T3452.1-2005	
67	**275000222**	1	PISTON		
68	**275000225**	1	SEAT		
69	**805046522**	2	BOLT	GB/T5783-2000	
70	**275000276**	1	HOUSING		
71	**803412690**	1	ORING 41.2×1.8	GB/T3452.1-2005	
72	**275000224**	2	SPING		
73	**275000238**	1	AXIS		
74	**275000274**	2	RETAINING RING 20		

402210694 BRAKE HYDRAULIC SYSTEM

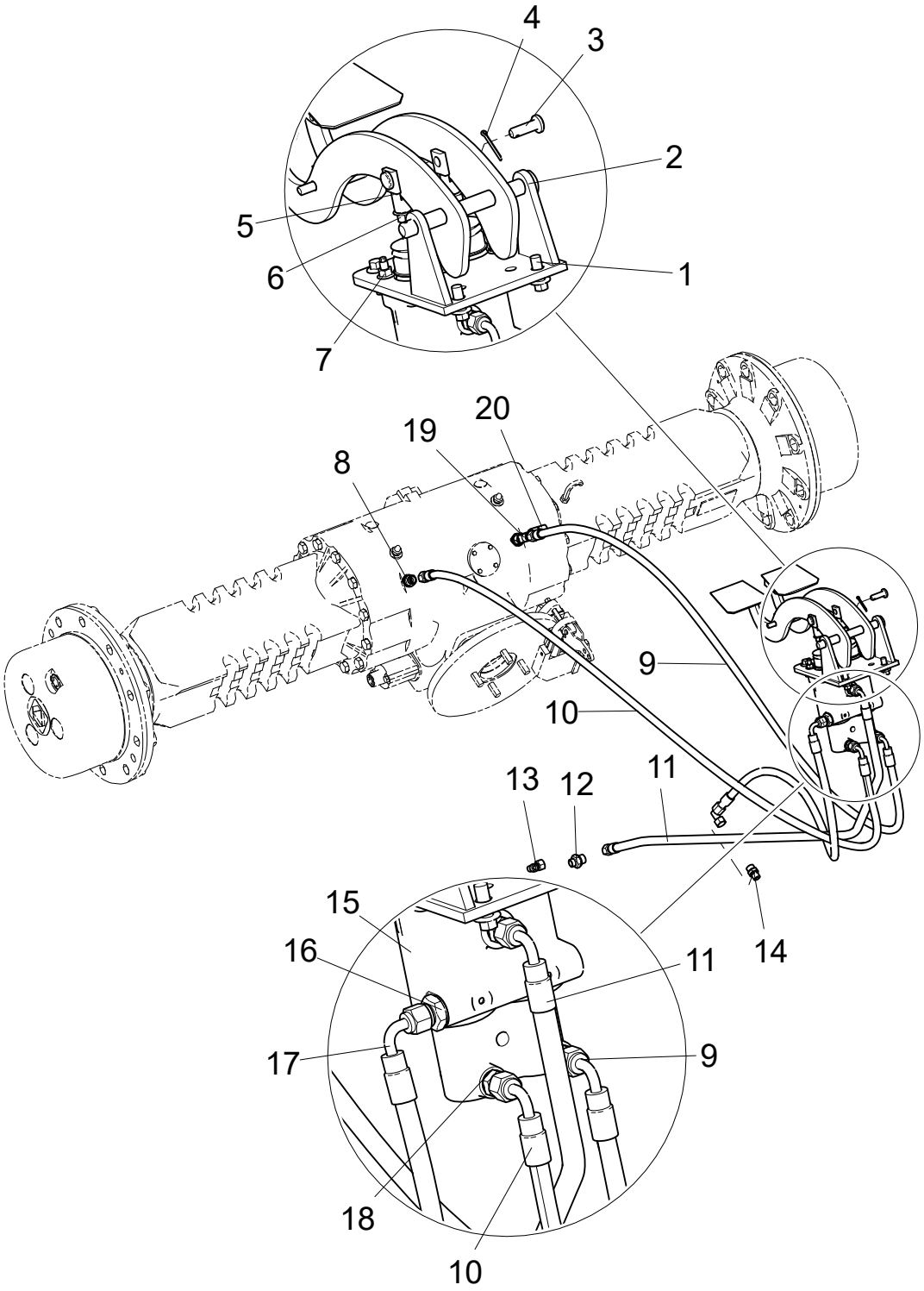

402210694 BRAKE HYDRAULIC SYSTEM

402216156 C2570AS

No.	PART NUMBER	QTY	NAME	NOTE	PAGE
1	**805004763**	4	BOLT M10×25(DACROMET)	GB/T16674.1-2004	
2	**804039784**	1	BRAKE PEDAL		
3	**805600068**	2	PIN 10×30	GB/T882-2008	
4	**805600316**	2	PIN 3.2×28	GB/T91-2000	
5	**402400343**	2	SPLICE		
6	**805238533**	2	NUT 10	GB/T6177.1-2000	
7	**805203166**	4	NUT M8	GB/T6177.1-2000	
8	**803104282**	2	SPLICE		
9	**803175467**	1	HOSE ASSEMBLY		
10	**803386483**	1	HOSE ASSEMBLY		
11	**822102936**	1	HOSE ASSEMBLY		
12	**803103529**	1	SPLICE		
13	**803103351**	2	SPLICE		
14	**803103341**	1	SPLICE		
15	**800383413**	1	BOOSTER		
16	**803174802**	1	SPLICE		
17	**803370309**	1	HOSE ASSEMBLY		
18	**803164370**	3	SPLICE		
19	**803162089**	1	SPLICE		
20	**803172162**	1	SPLICE		

402208162 STEERING HYDRAULIC SYSTEM

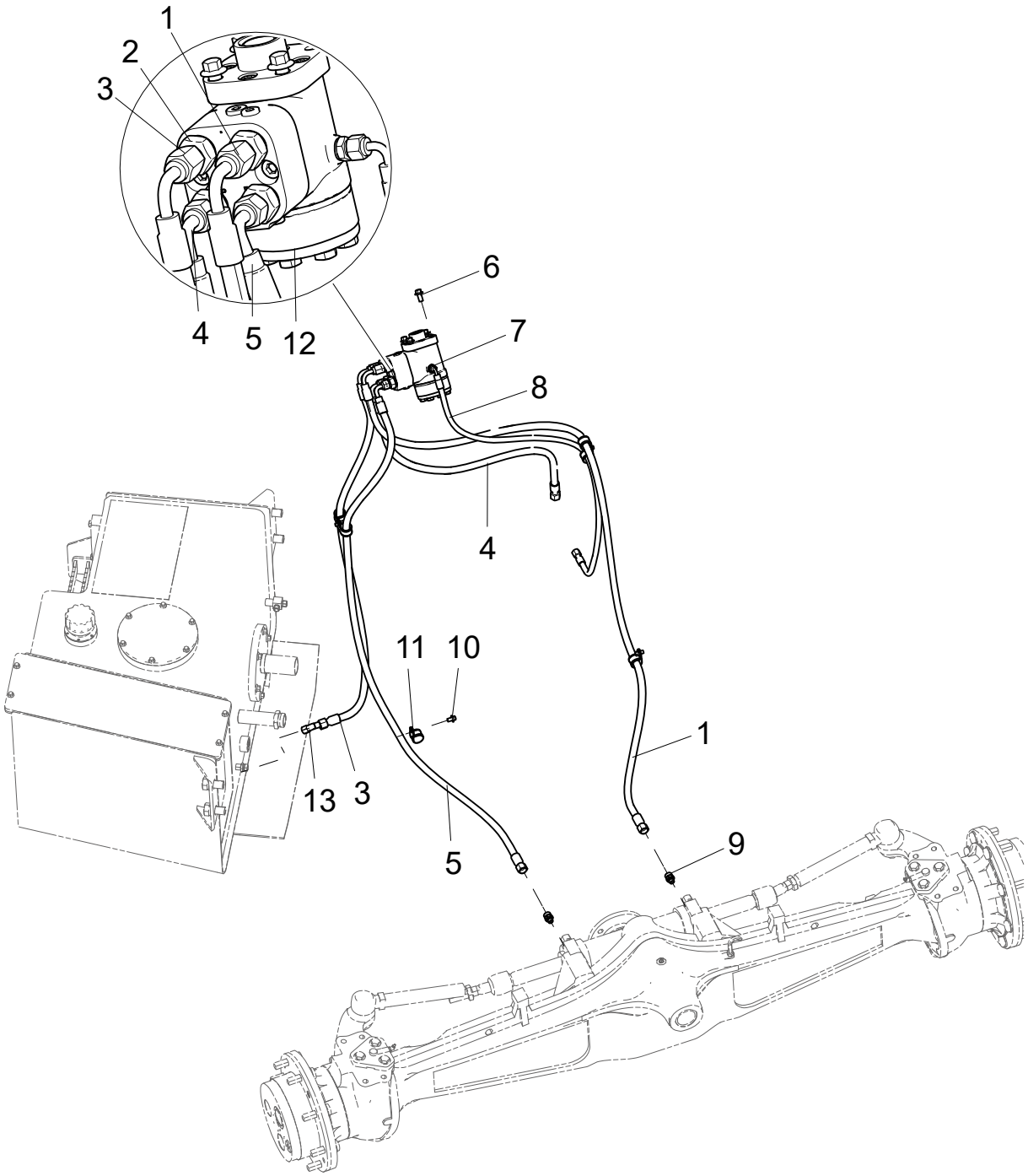

402208162 STEERING HYDRAULIC SYSTEM

402216156 C2570AS

No.	PART NUMBER	QTY	NAME	NOTE	PAGE
1	**803438381**	1	HOSE ASSEMBLY		
2	**803378731**	4	SPLICE		
3	**803301145**	1	HOSE ASSEMBLY		
4	**803184123**	1	HOSE ASSEMBLY		
5	**803191152**	1	HOSE ASSEMBLY		
6	**805004770**	4	BOLT M10×20(DACROMET)	GB/T16674.1-2004	
7	**803103817**	1	SPLICE		
8	**803398996**	1	HOSE ASSEMBLY		
9	**803307938**	2	SPLICE		
10	**805047997**	4	BOLT M8×12(DACROMET)	GB/T16674.1-2004	
11	**803199329**	6	CUTTING FERRULE Φ26	TJBC	
12	**804009757**	1	STEERING GEAR		
13	**803307037**	1	SPLICE		

402207763 PARKING BRAKE SYSTEM

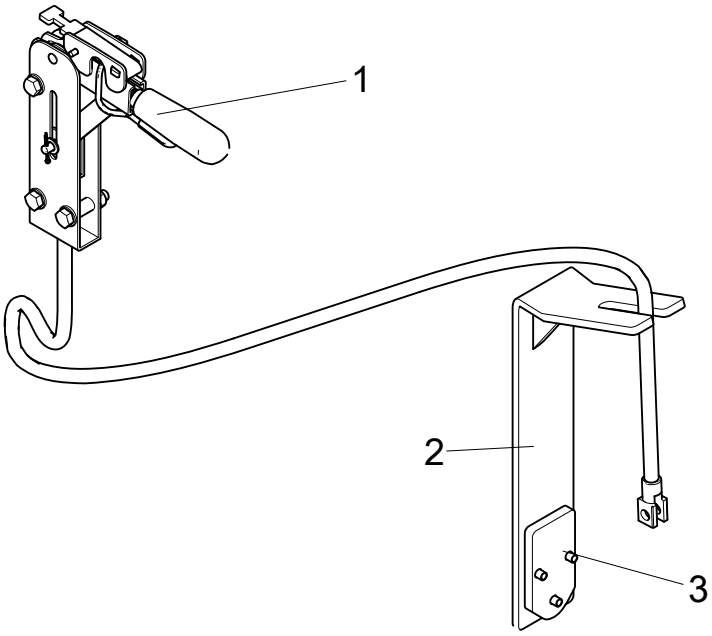

402207763 PARKING BRAKE SYSTEM

402216156 C2570AS

No.	PART NUMBER	QTY	NAME	NOTE	PAGE
1	**800378840**	1	PARKING BRAKE		
2	**402207148**	1	SOFT SHAFT BRACKET		
3	**805004717**	3	BOLT M8×25	GB/T16674.1-2004	

402216335 AIR CONDITIONING SYSTEM

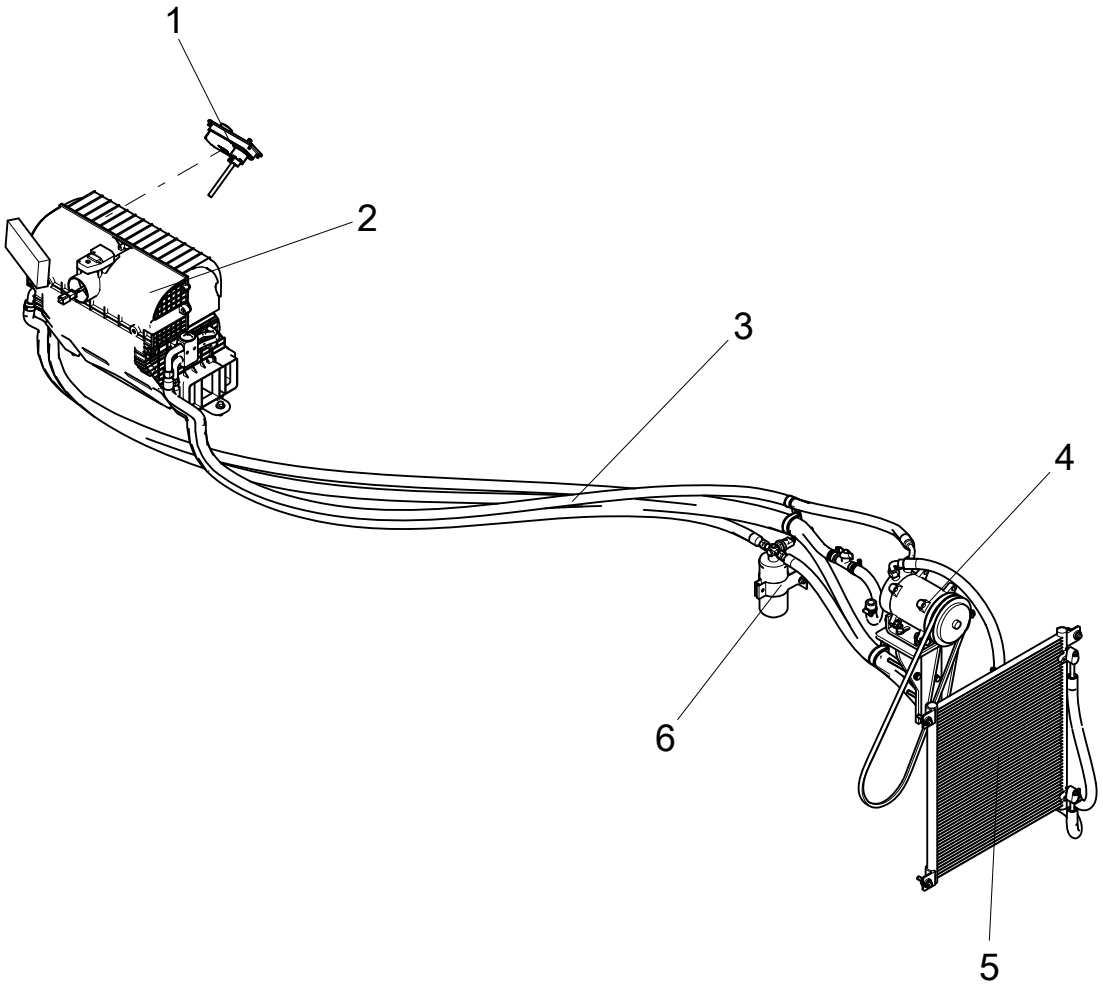

402216335 AIR CONDITIONING SYSTEM

402216156 C2570AS

No.	PART NUMBER	QTY	NAME	NOTE	PAGE
1	**402216367**	1	AIR-CONDITIONING ELECTRICAL GROUP		
2	**402216164**	1	EVAPORATOR ASSY		
3	**402216369**	1	JOINT AND PIPE		
4	**402216372**	1	COMPRESSOR ASSY		
5	**402216163**	1	CONDENSER SUBASSEMBLY		
6	**402216368**	1	STORE FLUID POT ASSY		

402216367 AIR-CONDITIONING ELECTRICAL GROUP

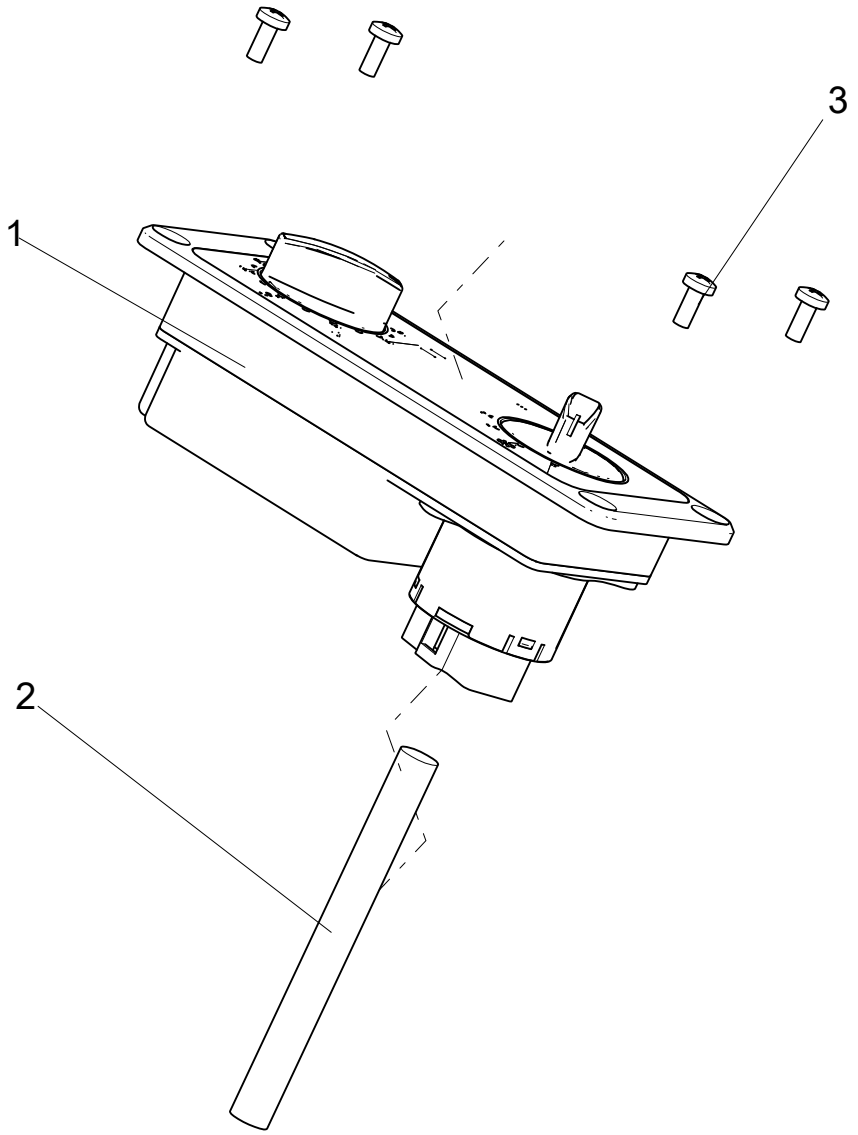

402216367 AIR-CONDITIONING ELECTRICAL GROUP

402216335 AIR CONDITIONING SYSTEM

No.	PART NUMBER	QTY	NAME	NOTE	PAGE
1	**803593899**	1	CONTROL PANEL		
2	**813508929**	1	WIRING HARNESS		
3	**805100409**	4	SCREW M4×10	GB/T818-2000	

402216164 EVAPORATOR ASSY

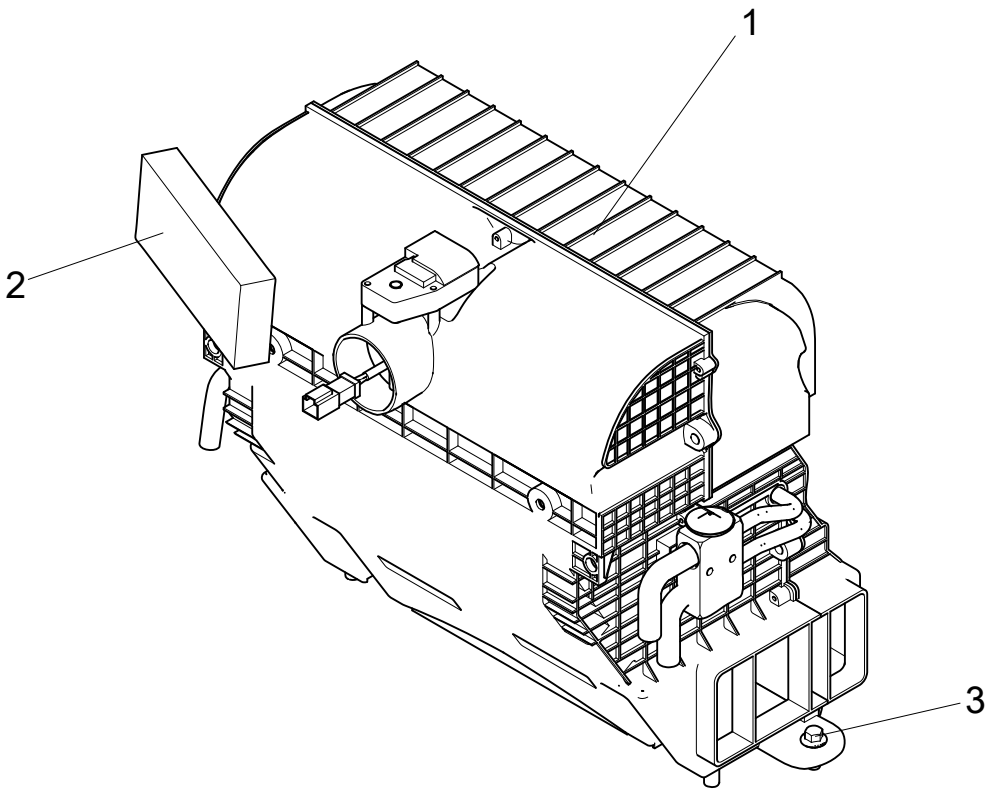

402216164 EVAPORATOR ASSY

402216335 AIR CONDITIONING SYSTEM

No.	PART NUMBER	QTY	NAME	NOTE	PAGE
1	**803593561**	1	EVAPORATOR ASSEMBLY		
2	**803593894**	1	FILTER COTTON		
3	**805004763**	2	BOLT M10×25(DACROMET)	GB/T16674.1-2004	

402216369 JOINT AND PIPE

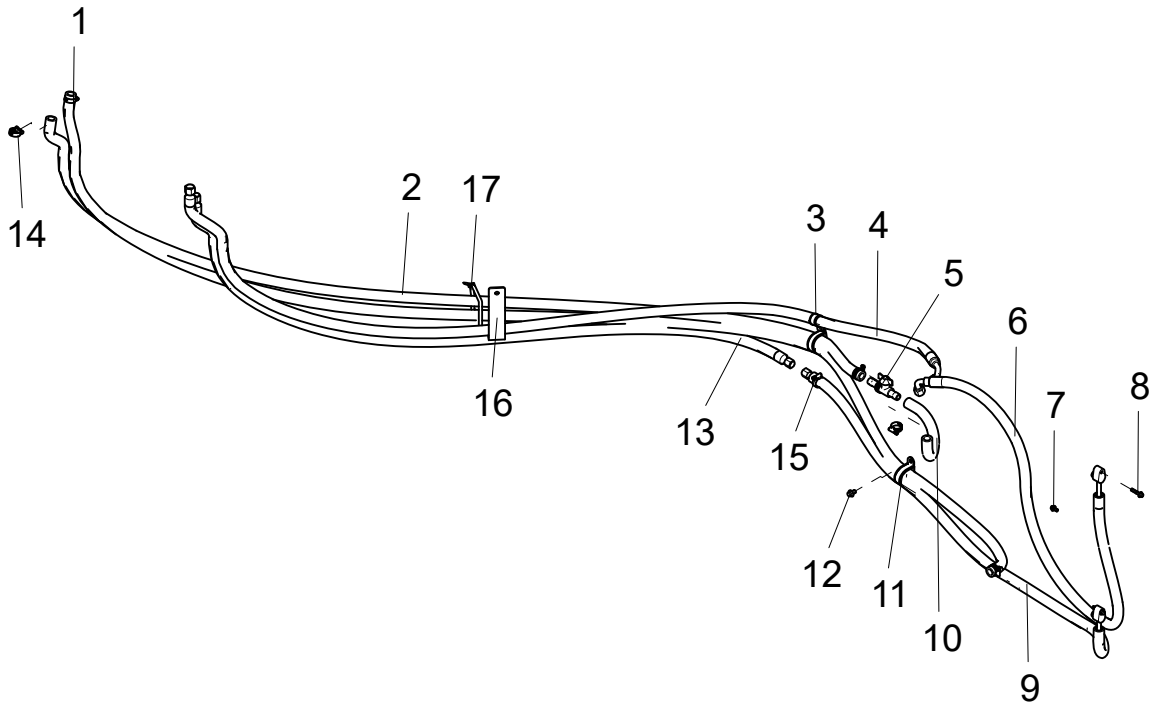

402216369 JOINT AND PIPE

402216335 AIR CONDITIONING SYSTEM

No.	PART NUMBER	QTY	NAME	NOTE	PAGE
1	**252911143**	1	THERMAL INSULATION WATER PIPEL=3300		
2	**803269658**	1	HOSEB16×2500		
3	**803199329**	1	CUTTING FERRULE Φ26	TJBC	
4	**813508928**	1	HOSE		
5	**813502659**	1	WATER VALVE SWITCH		
6	**813508927**	1	COMPRESSOR-CONDENSER-1500-ELBOW-STRAIGHT PIPE		
7	**805004834**	1	BOLT M6×12(DACROMET)	GB/T16674.1-2004	
8	**805047994**	2	SCREW M6×30	GB/T16674.1-2004	
9	**813508324**	1	CONDENSER-RESERVOIR-1300-TUBE-TUBE		
10	**803398973**	1	HOSE B16×480		
11	**803300795**	2	CUTTING SLEEVE Φ45	TJBC	
12	**805047997**	2	BOLT M8×12(DACROMET)	GB/T16674.1-2004	
13	**813508325**	1	RESERVOIR-EVAPORATOR-2100-TUBE-ELBOW		
14	**801902709**	6	HOSE CLAMP B25-38	QC/T619-1999	
15	**801968904**	6	HOOP B14-27	QC/T619-1999	
16	**402217309**	1	BRACKET		
17	**801902651**	3	NYLON	10×350-2	

402216372 COMPRESSOR ASSY

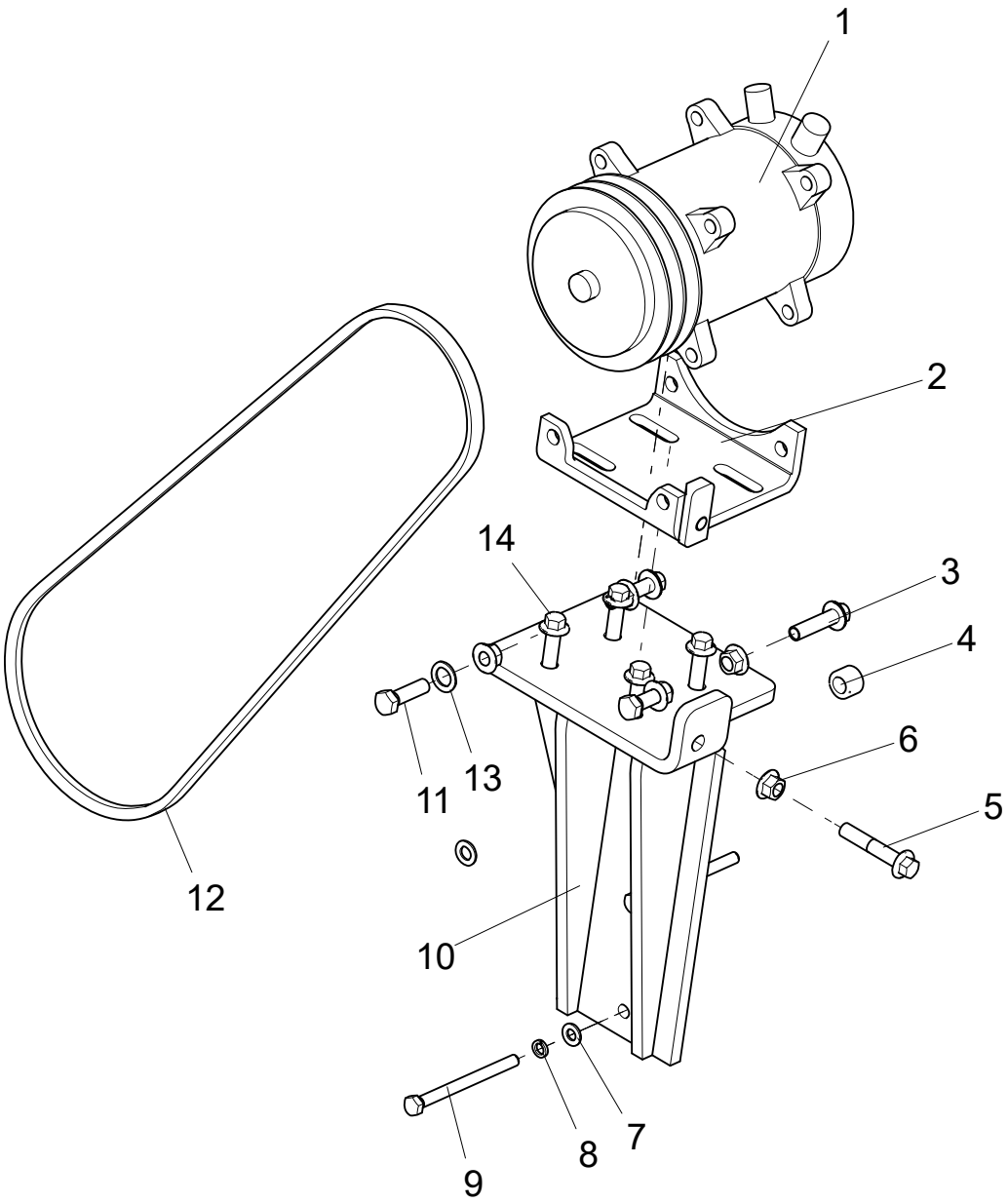

402216372 COMPRESSOR ASSY

402216335 AIR CONDITIONING SYSTEM

No.	PART NUMBER	QTY	NAME	NOTE	PAGE
1	**803593906**	1	COMPRESSOR		
2	**402205741**	1	BRACKET		
3	**805048008**	2	BOLT M10×40	GB/T16674.1-2004	
4	**402400261**	1	CUSHION COVER		
5	**805004715**	1	BOLT M10×55	GB/T16674.1-2004	
6	**805238533**	9	NUT 10	GB/T6177.1-2000	
7	**805300069**	3	GASKET 8	GB/T97.1-2002	
8	**805300010**	3	GASKET 8	GB/T93-1987	
9	**805002057**	3	BOLT	GB/T5783-2000	
10	**402216370**	1	UNDERCARRIAGE FRAME		
11	**805000062**	2	BOLT M10×35	GB/T5783-2000	
12	**813508956**	1	BELT A17-520		
13	**252914021**	1	LINE		
14	**805048007**	6	BOLT M10×35	GB/T16674.1-2004	

402216163 CONDENSER SUBASSEMBLY

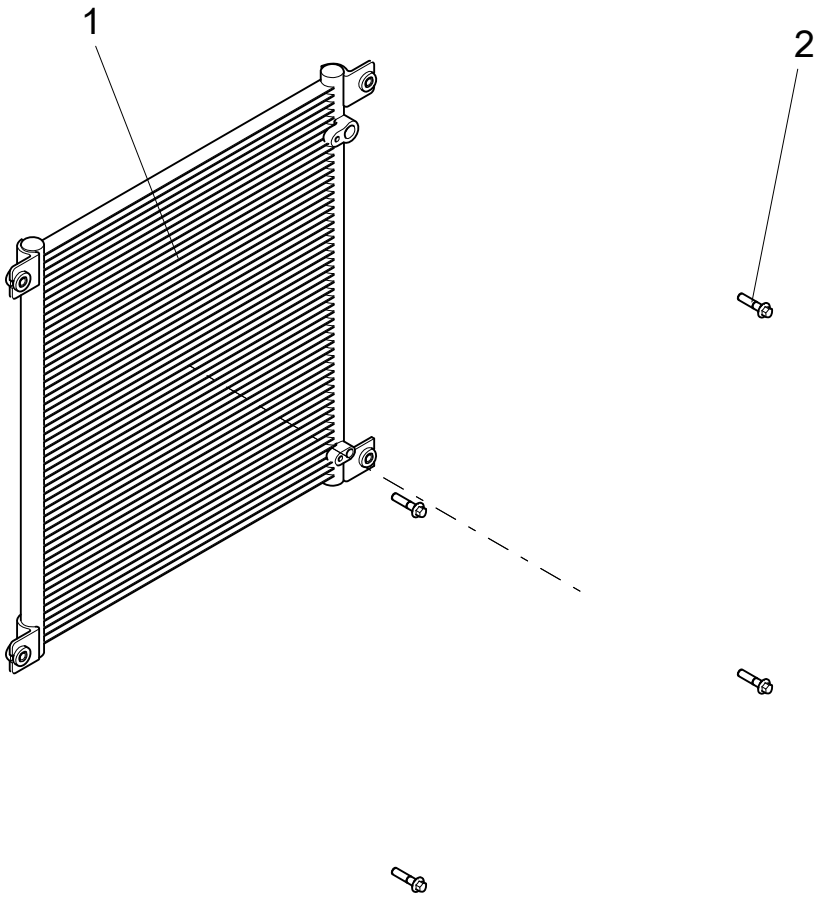

402216163 CONDENSER SUBASSEMBLY

402216335 AIR CONDITIONING SYSTEM

No.	PART NUMBER	QTY	NAME	NOTE	PAGE
1	**813508356**	1	AIR-CONDITION CONDENSER		
2	**805047998**	4	BOLT M8×35	GB/T16674.1-2004	

402216368 STORE FLUID POT ASSY

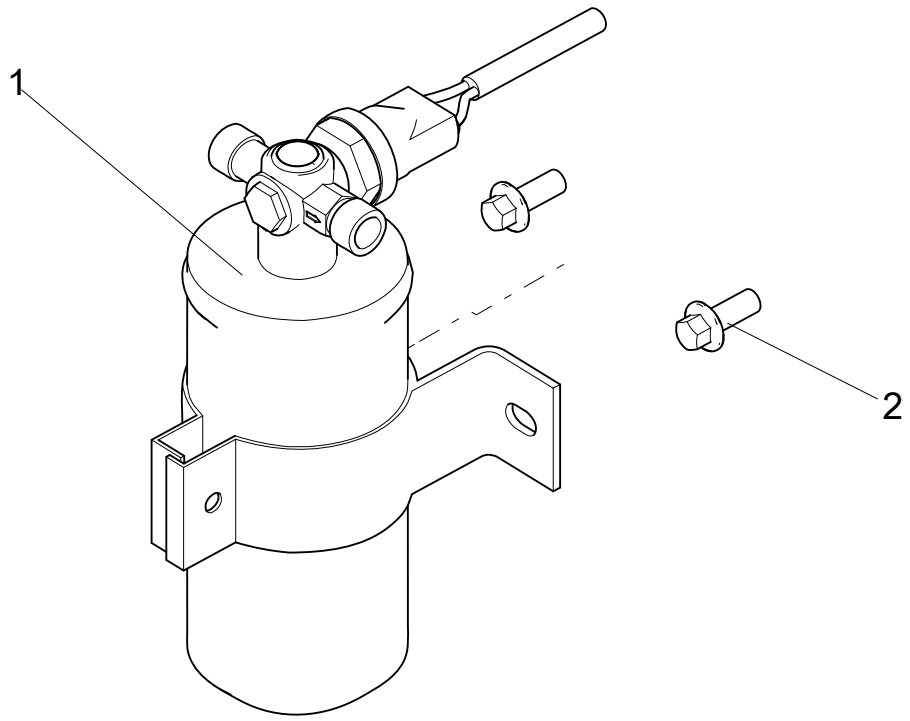

402216368 STORE FLUID POT ASSY

402216335 AIR CONDITIONING SYSTEM

No.	PART NUMBER	QTY	NAME	NOTE	PAGE
1	**803593904**	1	RESERVOIR		
2	**805004756**	2	BOLT M8×20 (DACROMET)	GB/T16674.1-2004	

402216310 UNDERCARRIAGE FRAME

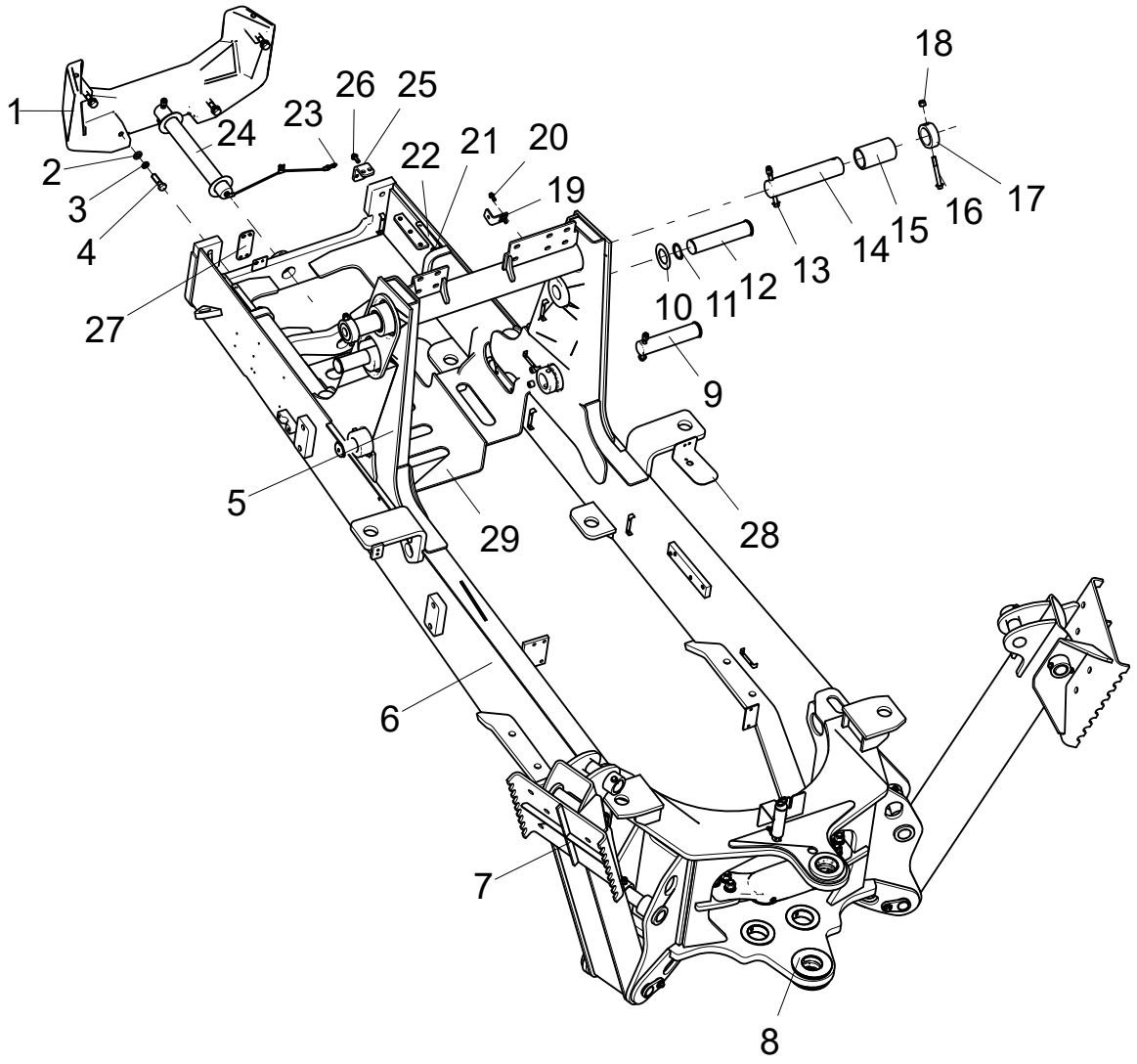

402216310 UNDERCARRIAGE FRAME

402216156 C2570AS

No.	PART NUMBER	QTY	NAME	NOTE	PAGE
1	**402212499**	1	COUNTERWEIGHT		
2	**805338284**	4	SPRING WASHER 16	GB/T97.1-2002	
3	**805338263**	4	SPRING WASHER 16	GB/T93-1987	
4	**805000091**	4	BOLT	GB/T5782-2000	
5	**805048028**	2	BOLT M12×110	GB/T16674.1-2004	
6	**402216309**	1	FRAME JOINTING ASSEMBLY		
7	**402207906**	1	OUTRIGGER ASSY.		
8	**402207888**	1	PLATE AS-SWING CYLINDER CONNECTION		
9	**402207900**	2	PIN		
10	**402201059**	2	FRONT AXLE CUSHION		
11	**805400027**	6	CHECK RING 50	GB/T894.1-1986	
12	**402207901**	2	PIN		
13	**805048030**	2	BOLT M12×130	GB/T16674.1-2004	
14	**402207898**	2	PIN		
15	**402207897**	2	AXIS COVER		
16	**805048027**	2	BOLT	GB/T16674.1-2004	
17	**402207899**	2	STOP COLLAR		
18	**805201516**	6	NUT M12	GB/T6182-2010	
19	**402207922**	2	AIR SPRING BRACKET		
20	**805004756**	4	BOLT M8×20 (DACROMET)	GB/T16674.1-2004	
21	**805047687**	4	BOLT M8×15 (DACROMET)	GB/T16674.1-2004	
22	**402215964**	1	FIXED BLOCK		
23	**801100336**	1	OIL CUP M10×1	JB/T7940.1-1995	
24	**402212503**	1	PIN SHAFT OF FRONT AXLE		
25	**402212504**	2	INSTLLATION PLATE OF FRONT COVER		
26	**805004763**	4	BOLT M10×25(DACROMET)	GB/T16674.1-2004	
27	**402212508**	1	HORN MOUNTING PLATE		
28	**402216403**	1	NEGATIVE POLE SWITCH MOUNTING PLATE		

402216310 UNDERCARRIAGE FRAME

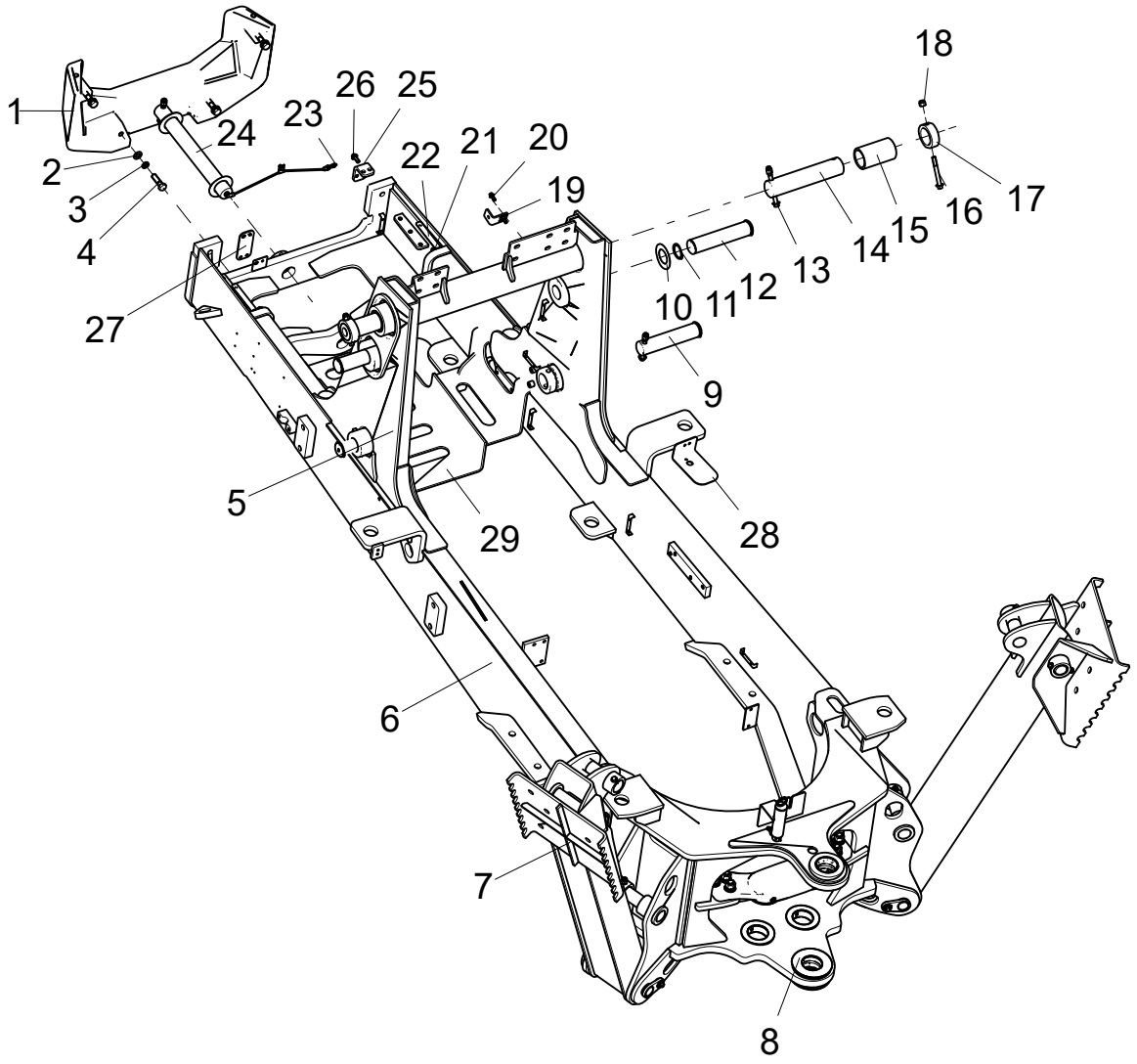

402216310 UNDERCARRIAGE FRAME

402216156 C2570AS

No.	PART NUMBER	QTY	NAME	NOTE	PAGE
29	**402215989**	1	DRIVE SHAFT PROTECTIVE FRAME		

402207906 OUTRIGGER ASSY.

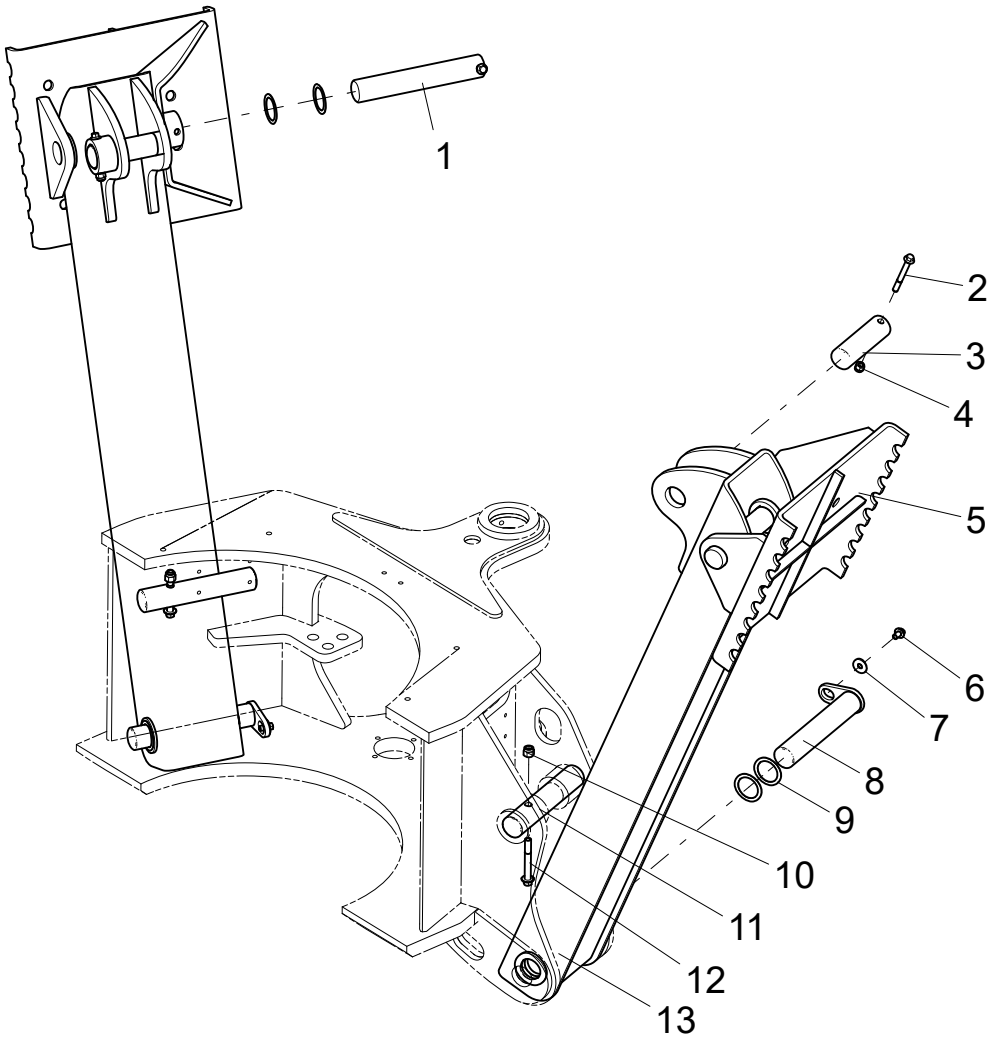

402207906 OUTRIGGER ASSY.

402216310 UNDERCARRIAGE FRAME

No.	PART NUMBER	QTY	NAME	NOTE	PAGE
1	**402205251**	2	PIN		
2	**805048014**	6	BOLT M10×85	GB/T16674.1-2004	
3	**402207884**	2	PIN		
4	**805238908**	6	NUT 10	GB/T6182-2010	
5	**402207880**	2	OUTRIGGER TRAY ASSEMBLY		
6	**805048005**	2	BOLT M10×16(DACROMET)	GB/T16674.1-2004	
7	**805338267**	2	WASHER 10	GB/T96.1-2002	
8	**269903280**	2	PIN		
9	**402201058**	8	WASHER		
10	**805239656**	2	NUT 12	GB/T6182-2010	
11	**402207883**	2	PIN		
12	**805048026**	2	BOLT	GB/T16674.1-2004	
13	**402217372**	2	OUTRIGGER WELDMENT ASSEMBLY		

402207888 PLATE AS-SWING CYLINDER CONNECTION

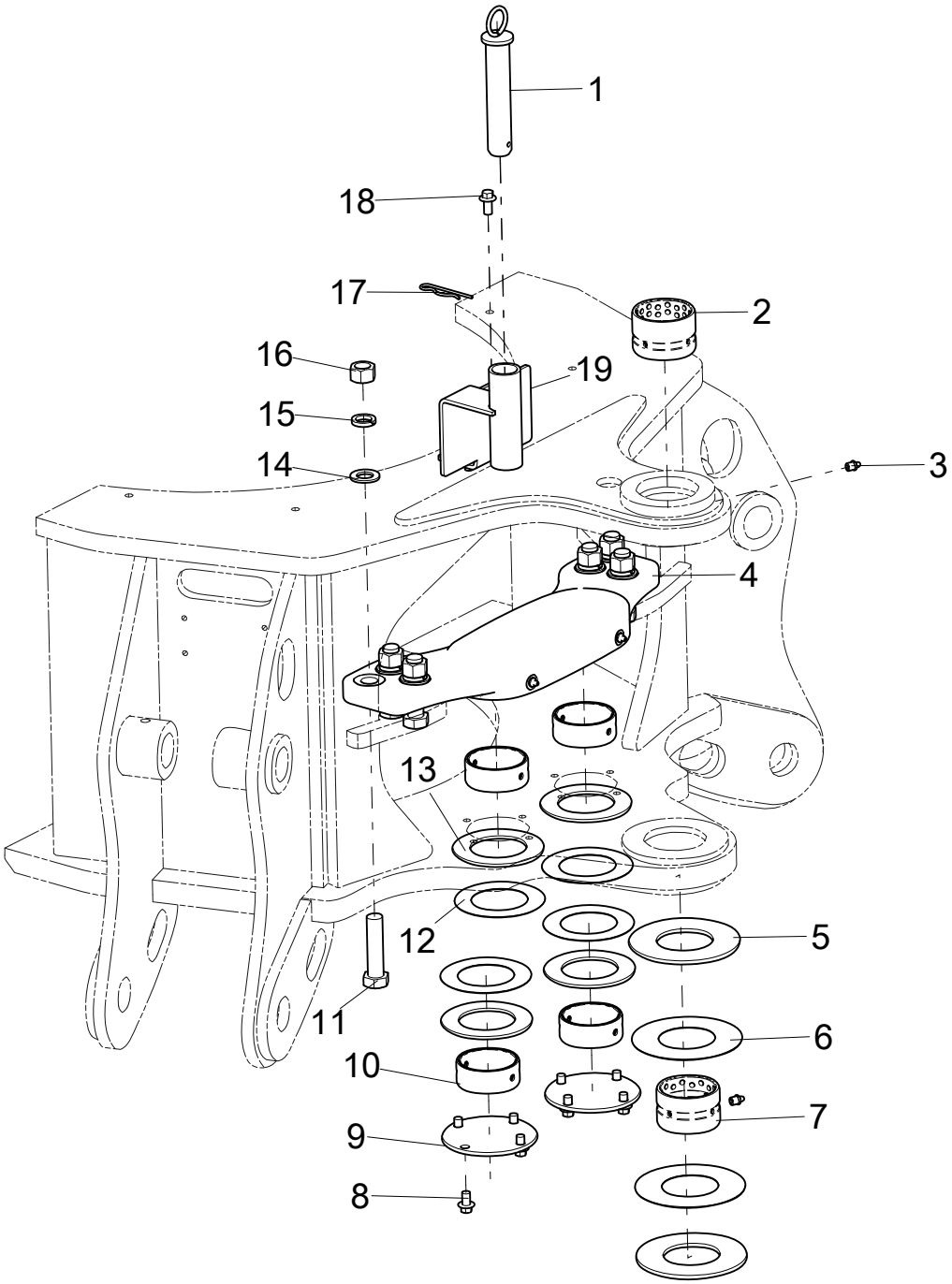

402207888 PLATE AS-SWING CYLINDER CONNECTION

402216310 UNDERCARRIAGE FRAME

No.	PART NUMBER	QTY	NAME	NOTE	PAGE
1	**402205321**	1	LOCATING PIN		
2	**402207892**	1	AXIS COVER		
3	**801103215**	4	OIL CUP M10×1	JB/T7940.1-1995	
4	**402214432**	1	RETAINER FLEX-PLATE		
5	**402205329**	2	SPACER		
6	**402205547**	2	ADJUSTING GASKET		
7	**402207893**	1	AXIS COVER		
8	**805048005**	8	BOLT M10×16(DACROMET)	GB/T16674.1-2004	
9	**402207891**	2	COVER		
10	**402207894**	4	AXIS COVER		
11	**805047579**	6	BOLT M20×80	GB/T5783-2000	
12	**402209770**	4	SPACER		
13	**402209771**	4	SPACER		
14	**805300112**	6	WASHER 20	GB/T97.1-2002	
15	**805300023**	6	WASHER 20	GB/T93-1987	
16	**805238375**	6	NUT M20	GB/T6170-2000	
17	**251500108**	1	ELASTIC RETAINING SPRING		
18	**805004770**	2	BOLT M10×20(DACROMET)	GB/T16674.1-2004	
19	**402207889**	1	SOFT SHAFT BRACKET		

402212503 PIN SHAFT OF FRONT AXLE

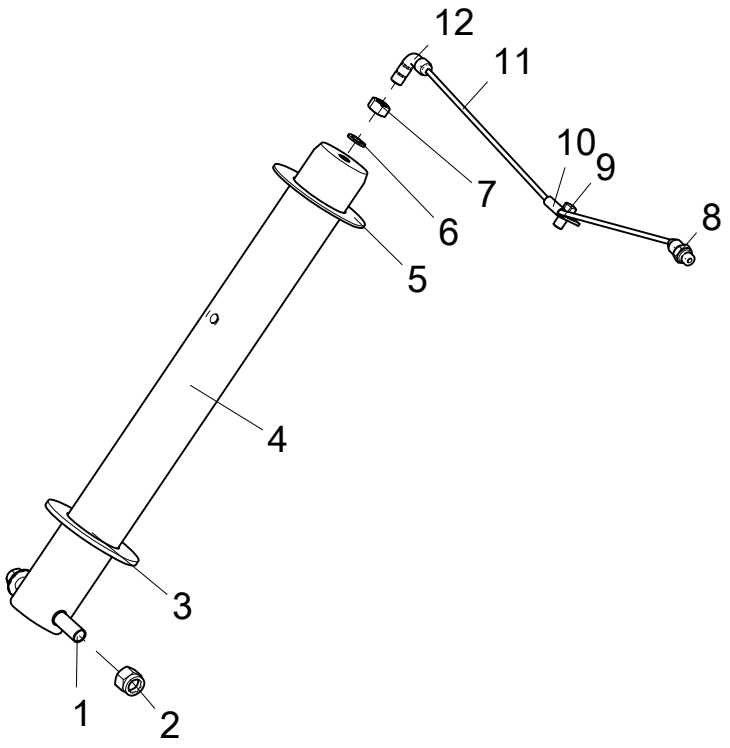

402212503 PIN SHAFT OF FRONT AXLE

402216310 UNDERCARRIAGE FRAME

No.	PART NUMBER	QTY	NAME	NOTE	PAGE
1	**805048026**	1	BOLT	GB/T16674.1-2004	
2	**805201516**	1	NUT M12	GB/T6182-2010	
3	**402201064**	1	GASKET OF FRONT AXLE II		
4	**402212506**	1	FRONT AXLE BRAKE HOSE		
5	**402201059**	1	FRONT AXLE CUSHION		
6	**805301409**	1	COMPOSITE SEALING HARD WASHER 10	Q/SC1294-2000	
7	**805200090**	1	NUT M10×1	GB/T6171-2000	
8	**803405054**	1	JOINT FITTING A6/M10×1	GB/T5625-2008	
9	**805047997**	1	BOLT M8×12(DACROMET)	GB/T16674.1-2004	
10	**803164978**	1	PIPE CLIP		
11	**402212378**	1	FRONT AXLE GREASE PIPE		
12	**803163961**	1	JOINT FITTING A6F	GB/T5631-2008	

402208047 EXCAVATING WORKING DEVICE

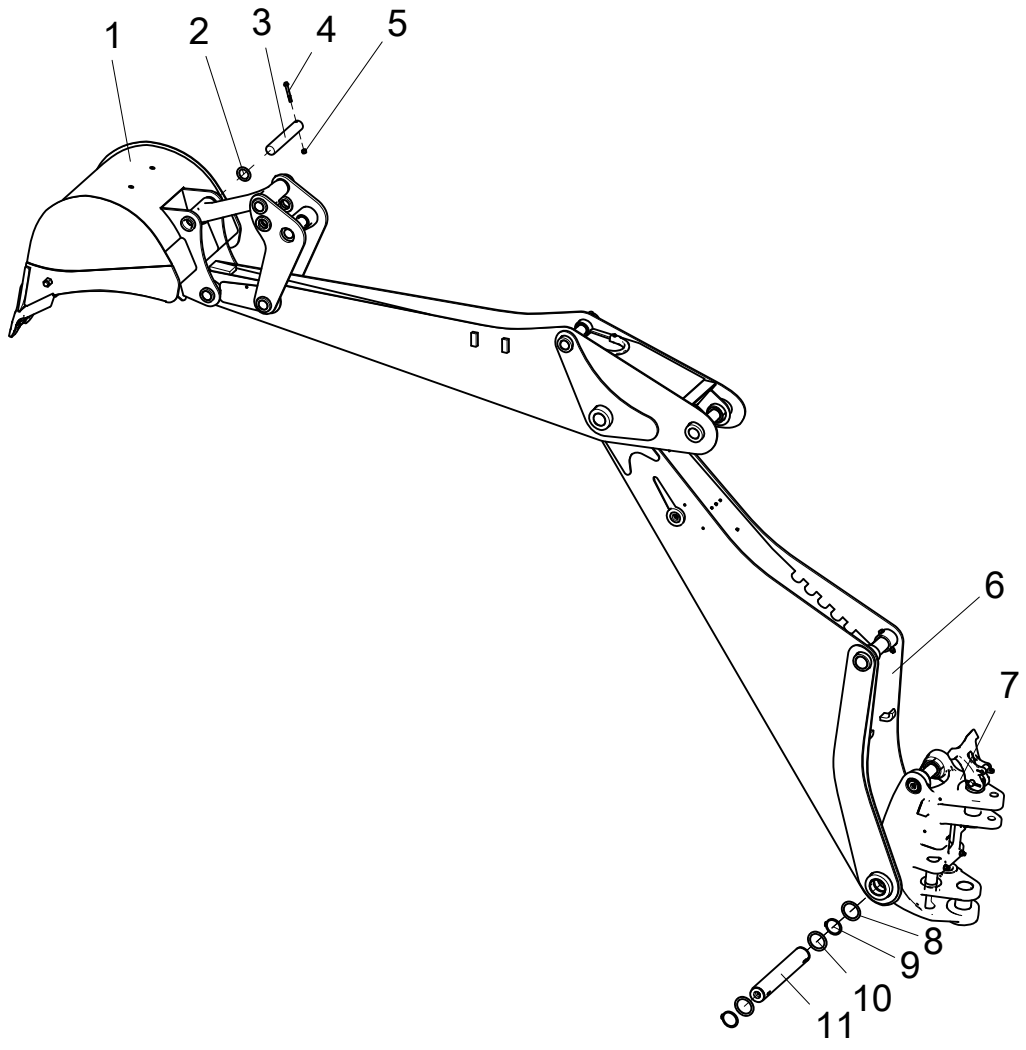

402208047 EXCAVATING WORKING DEVICE

402216156 C2570AS

No.	PART NUMBER	QTY	NAME	NOTE	PAGE
1	**402207676**	1	EXCAVATOR BUCKET ASSELBLY		
2	**402100947**	2	WASHER		
3	**402205251**	2	PIN		
4	**805006193**	2	BOLT M10×80(DACROMET)	GB/T16674.1-2004	
5	**805201515**	2	NUT M10	GB/T6182-2010	
6	**402208045**	1	BOOM, ARM, AND CONNECTING ROD ASSEMBLY		
7	**402208046**	1	ROTATIONAL AS		
8	**402100809**	2	ADJUSTING GASKET		
9	**805400029**	2	CHECK RING	GB/T894.1-1986	
10	**402100811**	2	SEPARATE BUSH		
11	**402205256**	1	PIN		

402207676 EXCAVATOR BUCKET ASSELBLY

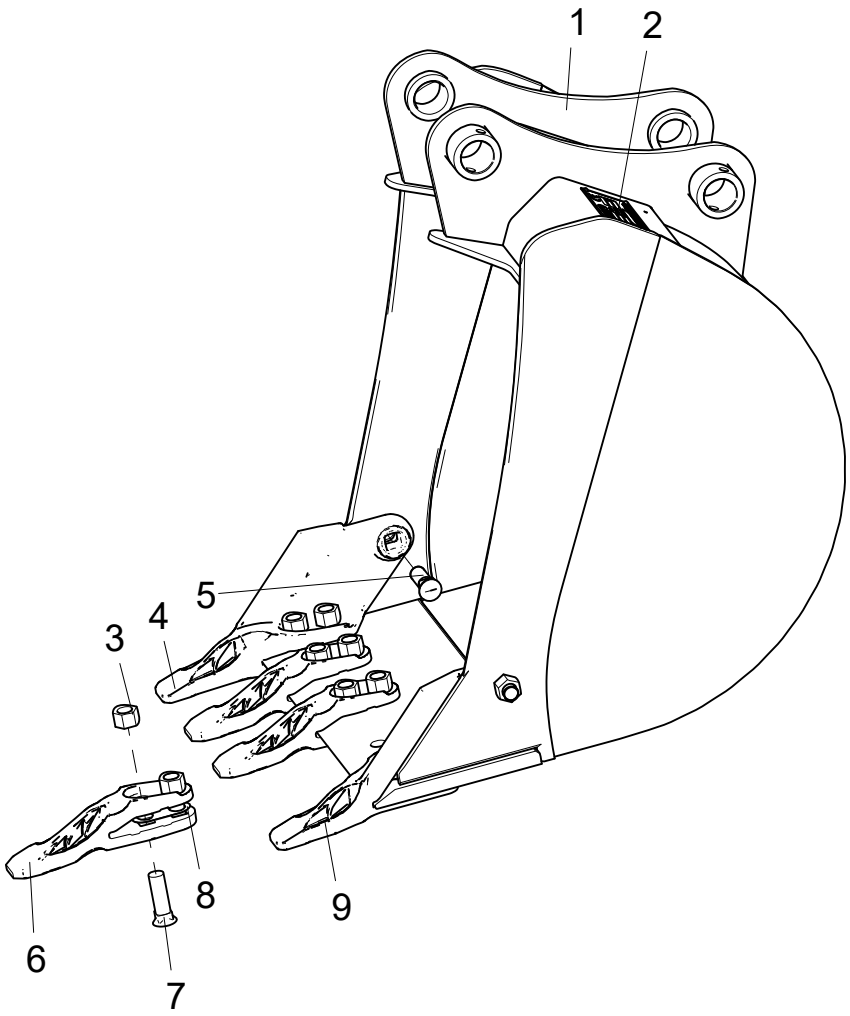

402207676 EXCAVATOR BUCKET ASSELBLY

402208047 EXCAVATING WORKING DEVICE

No.	PART NUMBER	QTY	NAME	NOTE	PAGE
1	**402207613**	1	BUCKET		
2	**402213504**	1	BUCKET NAMEPLATE		
3	**819965290**	12	NUT		
4	**819964527**	1	RIGHT SIDE TOOTH		
5	**805084034**	2	BOLT OF BUCKET TEETH		
6	**819964525**	3	TOOTH		
7	**819965289**	10	BOLT OF BUCKET TEETH		
8	**402214966**	5	ADJUSTING GASKET		
9	**819964526**	1	LEFT SIDE TOOTH		

402208045 BOOM, ARM, AND CONNECTING ROD ASSEMBLY

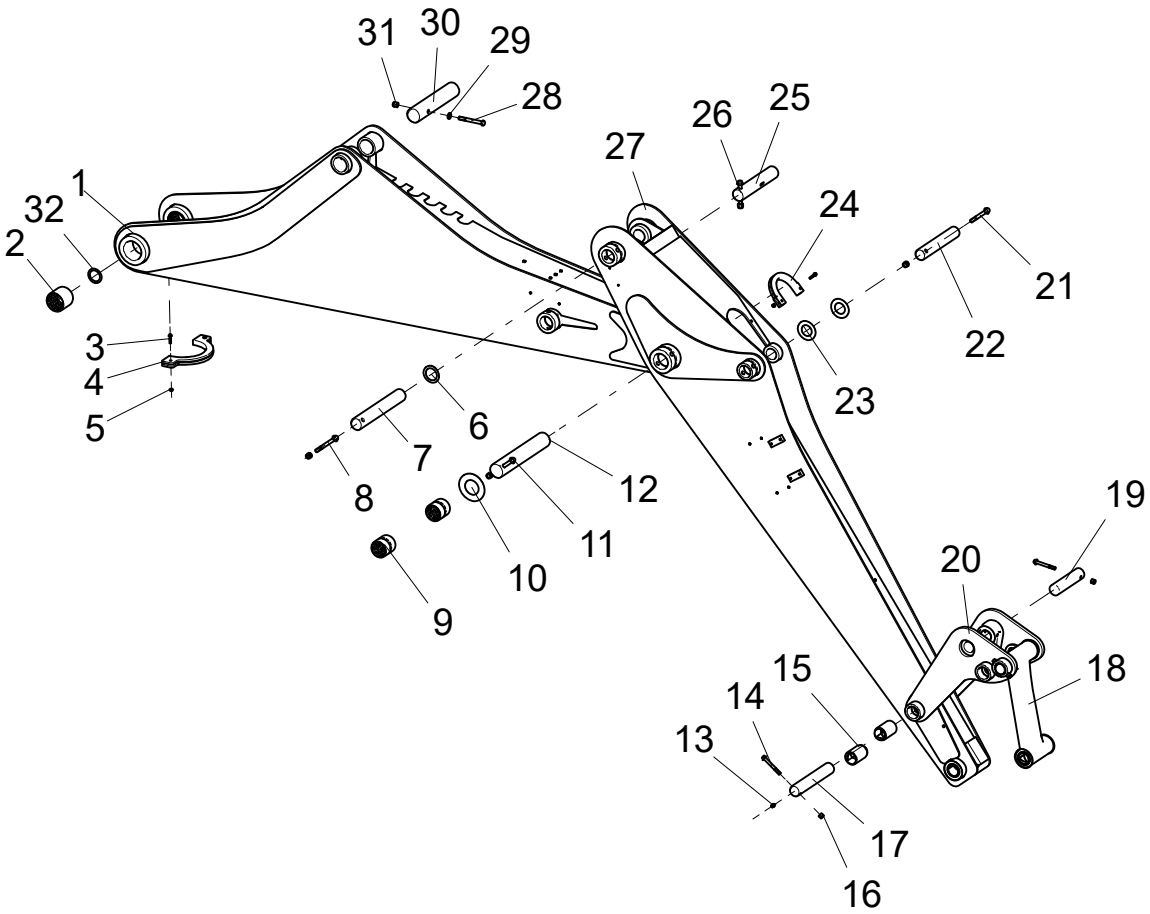

402208045 BOOM, ARM, AND CONNECTING ROD ASSEMBLY

402208047 EXCAVATING WORKING DEVICE

No.	PART NUMBER	QTY	NAME	NOTE	PAGE
1	**402208039**	1	BOOM		
2	**402207951**	2	AXIS COVER		
3	**805047994**	4	SCREW M6×30	GB/T16674.1-2004	
4	**402205616**	1	SHEATH		
5	**805135720**	4	NUT M6(DACROMET)	GB/T6177.1-2000	
6	**402100821**	2	SEPARATE BUSH		
7	**402205254**	1	PIN		
8	**805048028**	1	BOLT M12×110	GB/T16674.1-2004	
9	**402207952**	2	AXIS COVER		
10	**402204388**	2	MAT		
11	**805048029**	1	BOLT M12×120	GB/T16674.1-2004	
12	**402205248**	1	PIN		
13	**801103215**	5	OIL CUP M10×1	JB/T7940.1-1995	
14	**805048014**	1	BOLT M10×85	GB/T16674.1-2004	
15	**402205247**	4	AXIS COVER		
16	**805238908**	1	NUT 10	GB/T6182-2010	
17	**402205251**	2	PIN		
18	**402205278**	1	CONNECTING ROD ASSEMBLY		
19	**402205223**	1	PIN		
20	**402205280**	1	ROCKER ARM		
21	**805048026**	1	BOLT	GB/T16674.1-2004	
22	**402205249**	1	PIN		
23	**269902458**	12	ADJUSTING GASKET		
24	**402205615**	1	SHEATH		
25	**402205270**	1	PIN		
26	**805048027**	1	BOLT	GB/T16674.1-2004	
27	**402205271**	1	ARM		
28	**805001921**	1	BOLT M12×105	GB/T5782-2000	

402208045 BOOM, ARM, AND CONNECTING ROD ASSEMBLY

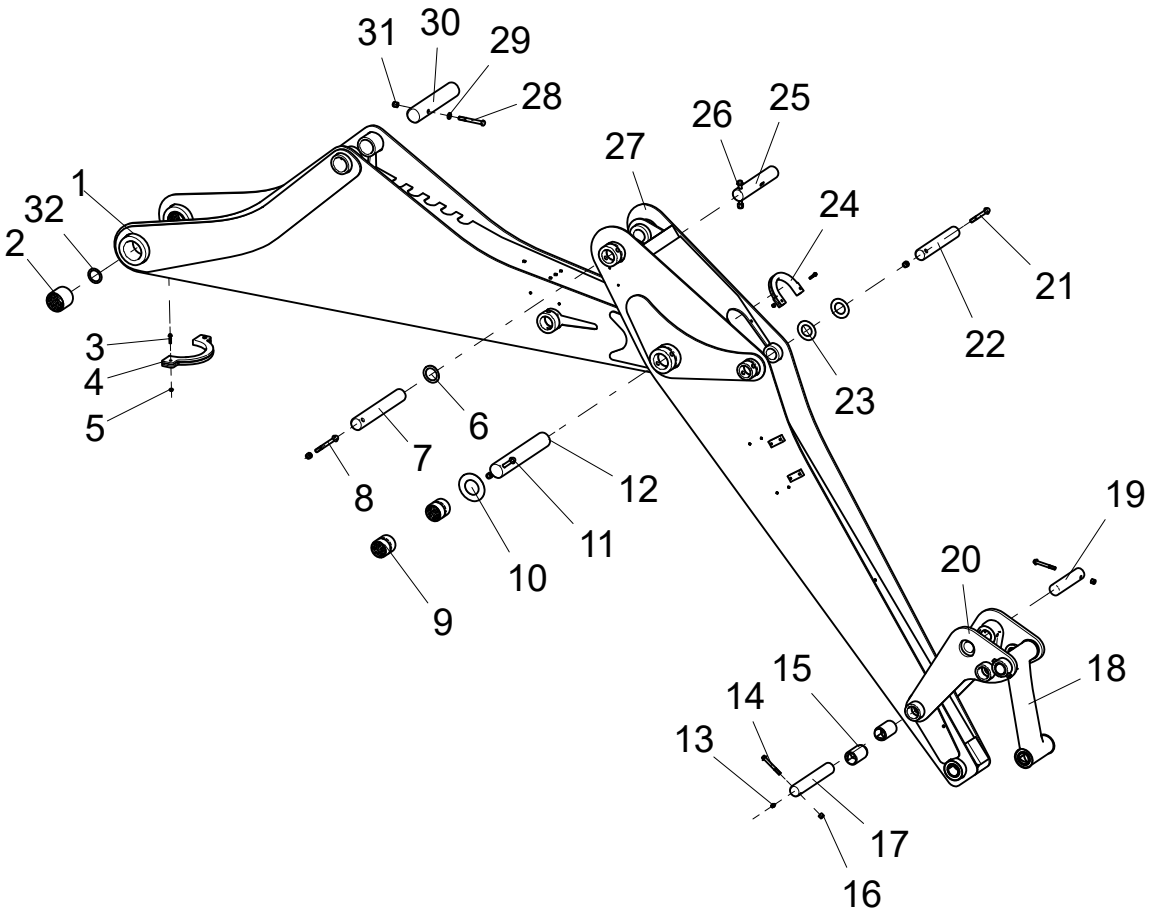

402208045 BOOM, ARM, AND CONNECTING ROD ASSEMBLY

402208047 EXCAVATING WORKING DEVICE

No.	PART NUMBER	QTY	NAME	NOTE	PAGE
29	**805338280**	1	WASHER 12	GB/T97.1-2002	
30	**402205257**	1	PIN		
31	**805201516**	5	NUT M12	GB/T6182-2010	
32	**402201058**	9	WASHER		

402205278 CONNECTING ROD ASSEMBLY

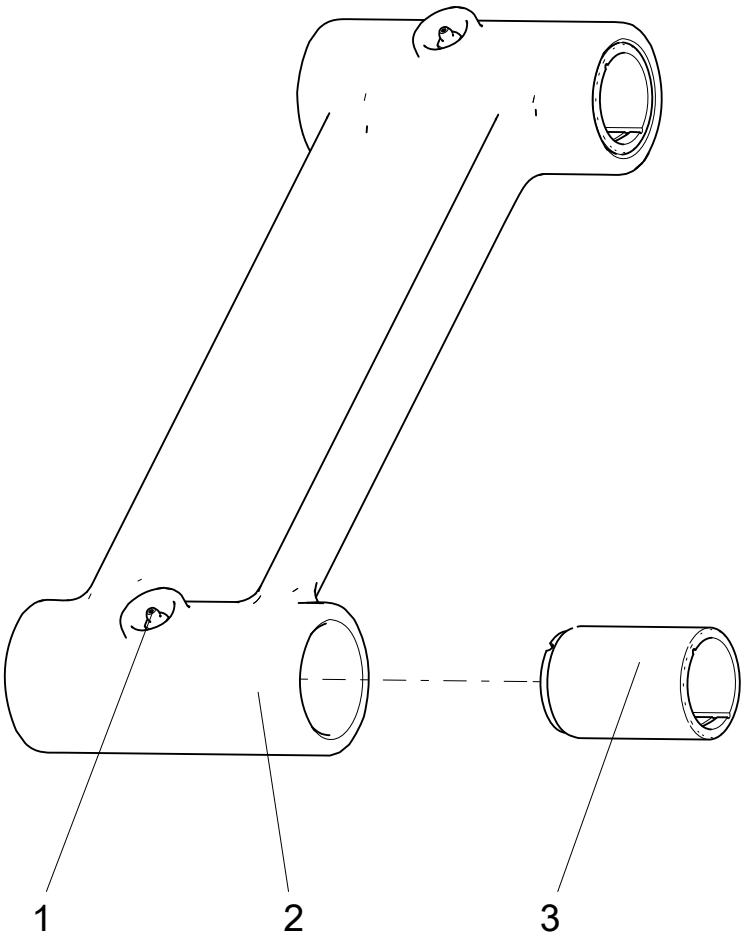

402205278 CONNECTING ROD ASSEMBLY

402208045 BOOM, ARM, AND CONNECTING ROD ASSEMBLY

No.	PART NUMBER	QTY	NAME	NOTE	PAGE
1	**801100336**	2	OIL CUP M10×1	JB/T7940.1-1995	
2	**402205292**	1	CONNECTING ROND		
3	**402205247**	4	AXIS COVER		

402208046 ROTATIONAL AS

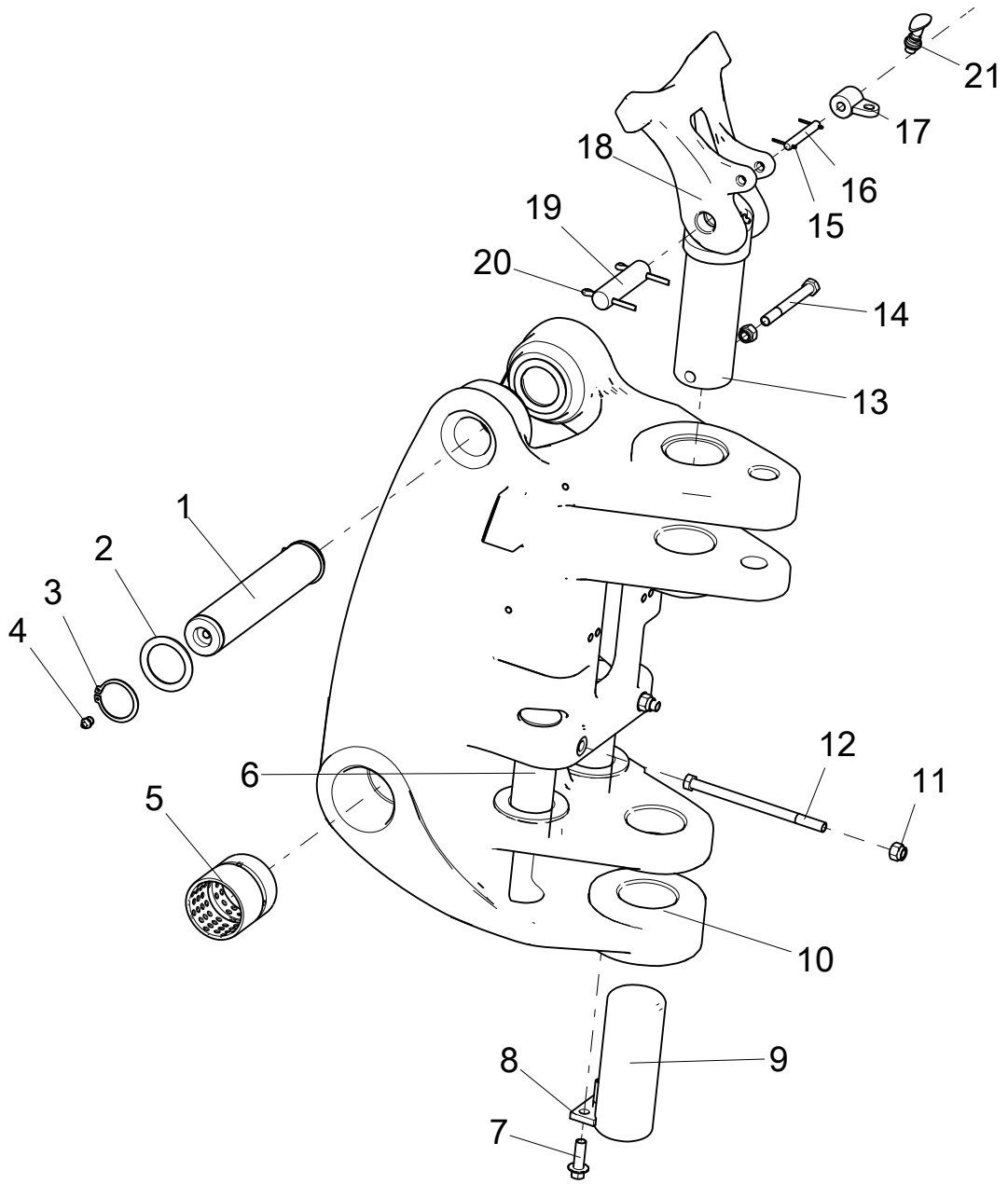

402208046 ROTATIONAL AS

402208047 EXCAVATING WORKING DEVICE

No.	PART NUMBER	QTY	NAME	NOTE	PAGE
1	**402205275**	1	PIN		
2	**402100821**	4	SEPARATE BUSH		
3	**805400027**	2	CHECK RING 50	GB/T894.1-1986	
4	**801100336**	5	OIL CUP M10×1	JB/T7940.1-1995	
5	**402208044**	2	AXIS COVER		
6	**402205265**	2	PIN		
7	**805048017**	2	BOLT M12×35 (DACROMET)	GB/T16674.1-2004	
8	**402205264**	1	BASEPLATE		
9	**402205260**	1	PIN		
10	**402205078**	1	CENTRAL ROTARY JOINT		
11	**805200098**	3	NUT M12	GB/T889.1-2000	
12	**805001939**	2	BOLT M12×180	GB/T5782-2000	
13	**402205263**	1	PIN		
14	**805000403**	1	BOLT M12×110	GB/T5782-2000	
15	**805601544**	2	PIN 2.5×25	GB/T91-2000	
16	**805601598**	1	PIN 10×75	GB/T880-2008	
17	**402205283**	1	HINGE		
18	**402205289**	1	POTHOOK		
19	**402205710**	1	PIN		
20	**805601715**	2	PIN 6.3×56	GB/T91-2000	
21	**800358896**	1	FLAMEOUT L2500 HOOK FLEXIBLE SHAFT		

402216287 WORKING HYDRAULIC SYSTEM

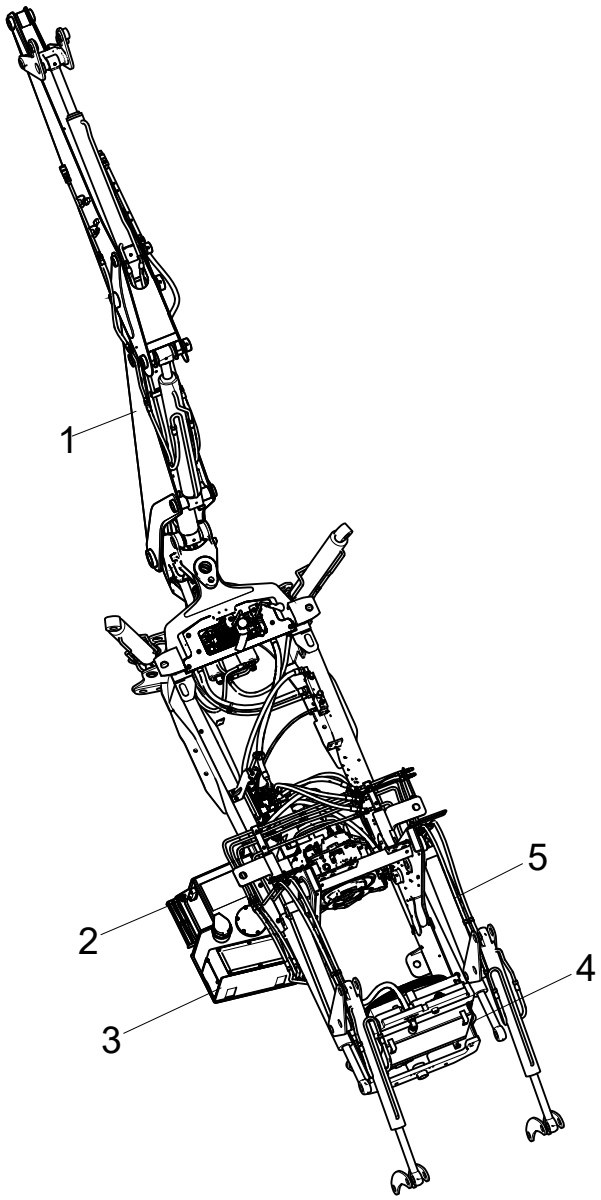

402216287 WORKING HYDRAULIC SYSTEM

402216156 C2570AS

No.	PART NUMBER	QTY	NAME	NOTE	PAGE
1	**402216293**	1	DIGGING HYDRAULIC SYSTEM		
2	**402216284**	1	OPERATIONAL PUMP HYDRAULIC SYSTEM		
3	**402216605**	1	HYDRAULIC OIL TANK ASSEMBLY		
4	**402216295**	1	RADIATOR PIPELINE SYSTEM		
5	**402208121**	1	LOADING HYDRAULIC SYSTEM		

402216293 DIGGING HYDRAULIC SYSTEM

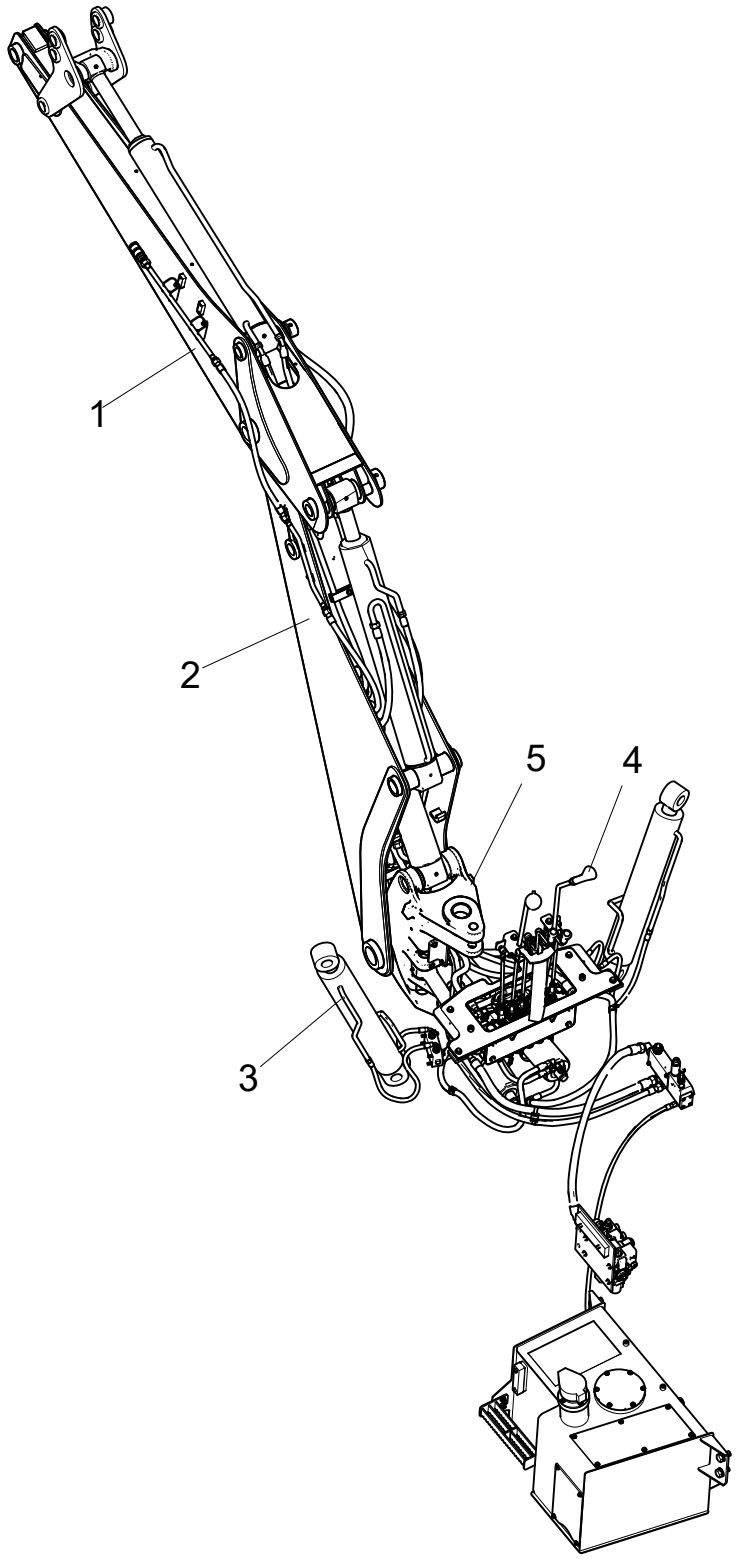

402216293 DIGGING HYDRAULIC SYSTEM

402216287 WORKING HYDRAULIC SYSTEM

No.	PART NUMBER	QTY	NAME	NOTE	PAGE
1	**402216286**	1	HYDRAULIC SYSTEM (HAMMER)		
2	**402208085**	1	BOOM PIPELINE		
3	**402208123**	1	OUTRIGGER HYDRAULIC SYSTEM		
4	**402208152**	1	DIGGING CONTROL SYSTEM		
5	**402208122**	1	ROTARY HYDRAULIC SYSTEM		

402216286 HYDRAULIC SYSTEM (HAMMER)

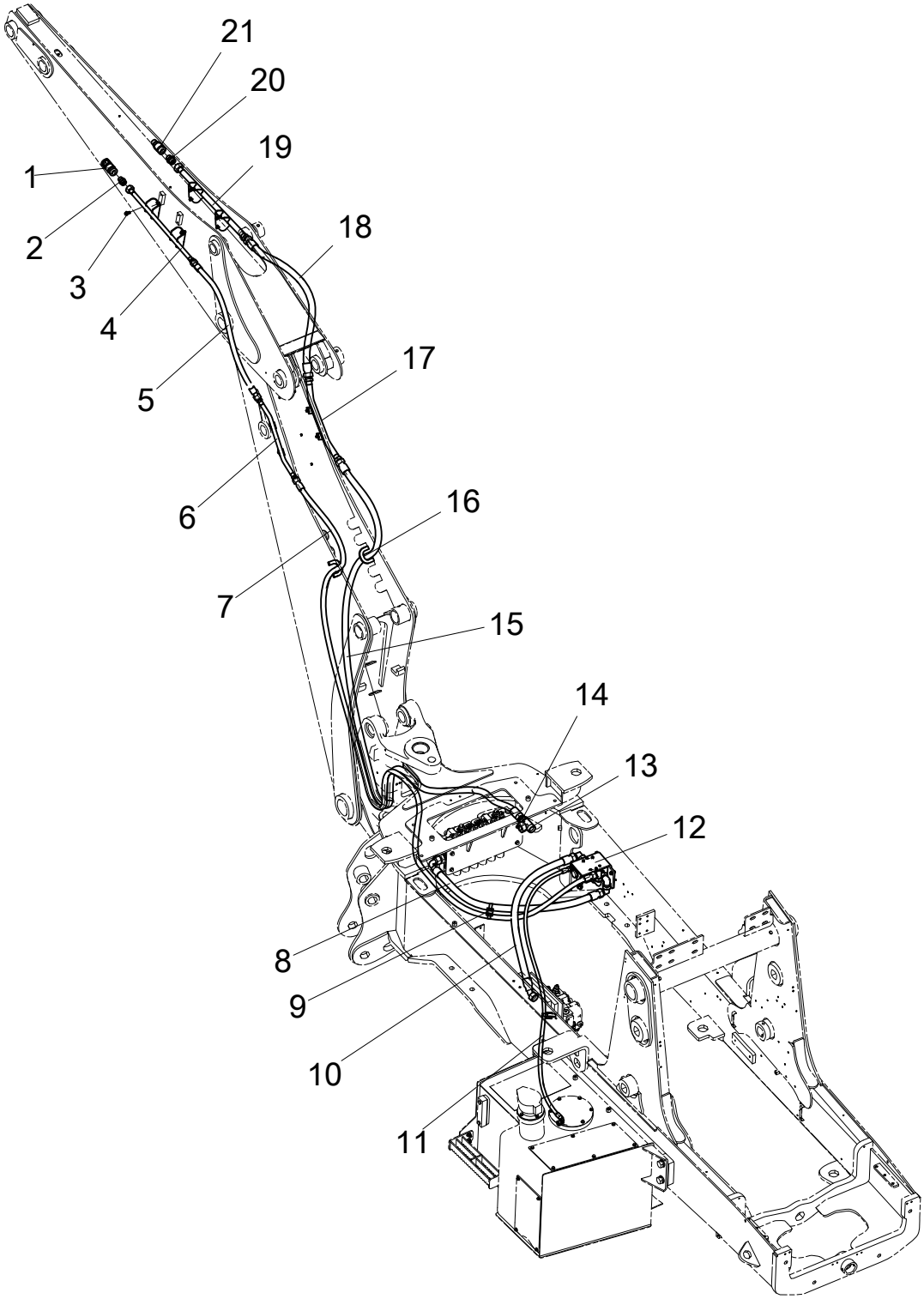

402216286 HYDRAULIC SYSTEM (HAMMER)

402216293 DIGGING HYDRAULIC SYSTEM

No.	PART NUMBER	QTY	NAME	NOTE	PAGE
1	**401002358**	1	QUICK CHANGE CONNECTOR		
2	**803105405**	1	SPLICE		
3	**805004755**	12	BOLT M8×16 (DACROMET)	GB/T16674.1-2004	
4	**402206030**	1	PIPE CLIP		
5	**803393081**	1	HOSE ASSEMBLY		
6	**402206022**	1	PIPE CLIP		
7	**803409219**	1	HOSE ASSEMBLY		
8	**803435241**	1	HOSE ASSEMBLY		
9	**801970975**	2	CLAMP	GNT-450DHDB	
10	**804435828**	1	HOSE ASSEMBLY		
11	**803198684**	1	HOSE ASSEMBLY		
12	**402216392**	1	BREAK VALVE		
13	**803176937**	1	SPLICE		
14	**803166749**	1	SPLICE		
15	**803369876**	1	HOSE ASSEMBLY		
16	**402205656**	2	SHEATH		
17	**402206008**	1	PIPE CLIP		
18	**803421087**	1	HOSE ASSEMBLY		
19	**402206031**	1	PIPE CLIP		
20	**803163744**	1	SPLICE		
21	**401002357**	1	QUICK CHANGE CONNECTOR		

402216392 BREAK VALVE

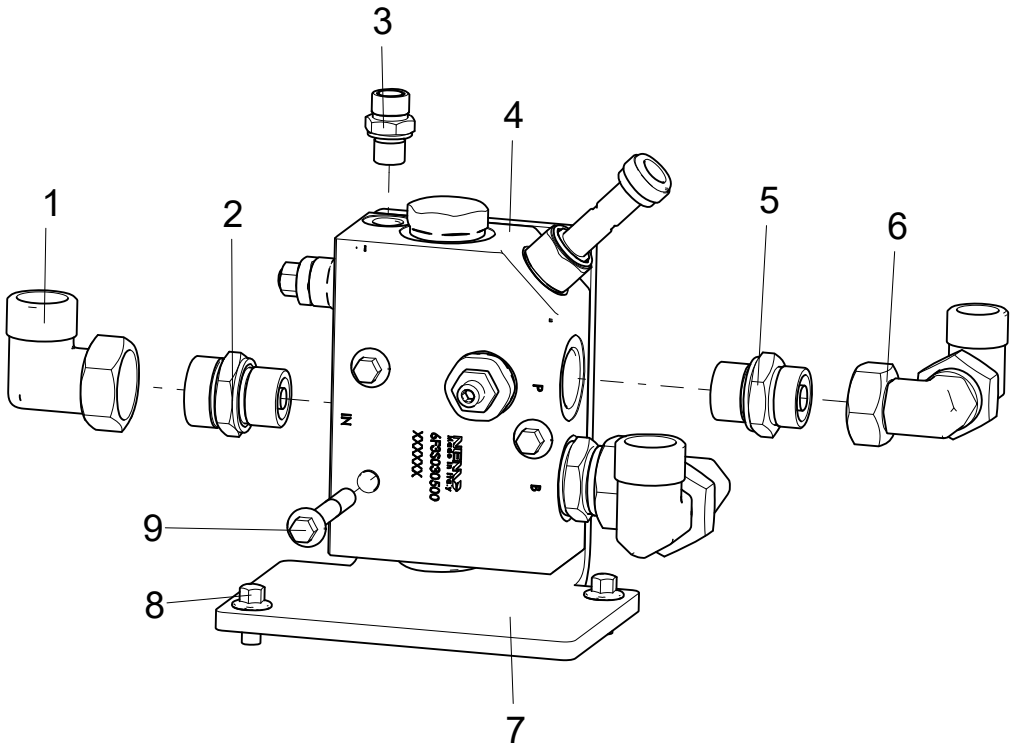

402216392 BREAK VALVE

402216286 HYDRAULIC SYSTEM (HAMMER)

No.	PART NUMBER	QTY	NAME	NOTE	PAGE
1	**803173684**	3	SPLICE		
2	**803103321**	2	SPLICE		
3	**803103326**	1	SPLICE		
4	**804008227**	1	CRUSHING VALVE		
5	**803172457**	1	SPLICE		
6	**803100741**	2	SPLICE		
7	**402215612**	1	MOUNTING PLATE		
8	**805004755**	2	BOLT M8×16 (DACROMET)	GB/T16674.1-2004	
9	**805048002**	3	BOLT M8×60(DACROMET)	GB/T16674.1-2004	

402208085 BOOM PIPELINE

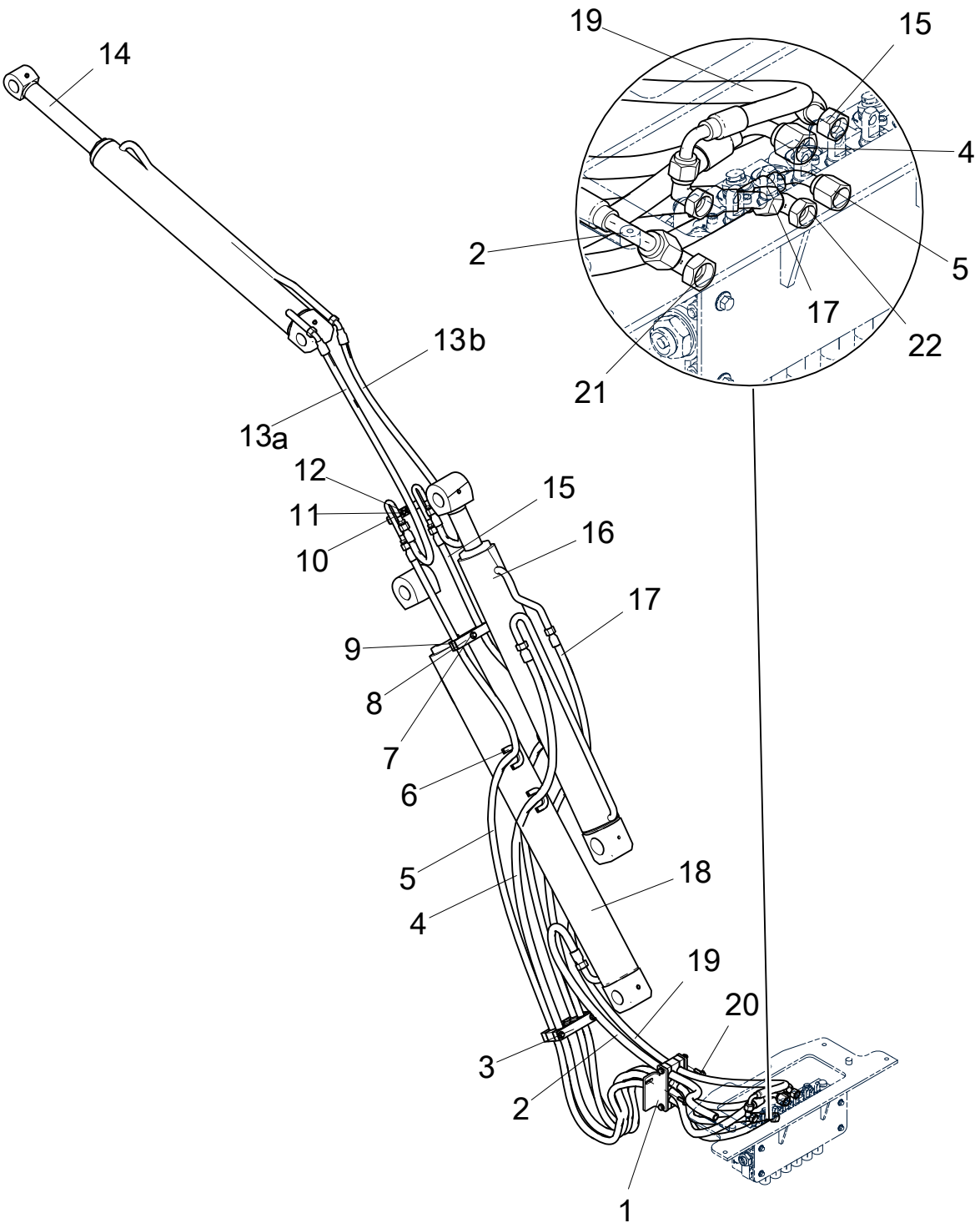

402208085 BOOM PIPELINE

402216293 DIGGING HYDRAULIC SYSTEM

No.	PART NUMBER	QTY	NAME	NOTE	PAGE
1	**402207698**	1	PIPE CLIP ASSEMBLY		
2	**804405697**	1	HOSE ASSEMBLY		
3	**402210651**	1	PIPE CLIP ASSEMBLY		
4	**804405698**	1	HOSE ASSEMBLY		
5	**804476694**	1	HOSE ASSEMBLY		
6	**402205656**	4	SHEATH		
7	**805048009**	1	BOLT M10×45	GB/T16674.1-2004	
8	**402207706**	1	FIXING PLATE		
9	**402207704**	2	PIPE CLIP		
10	**402211211**	1	STEEL TUBE		
11	**805004717**	2	BOLT M8×25	GB/T16674.1-2004	
12	**402211209**	1	CHECKING SHEET		
13	**813406198**	2	HOSE ASSEMBLY		
14	**803086391**	1	BUCKET CYLINDER		
15	**804476696**	1	HOSE ASSEMBLY		
16	**803086389**	1	AMCY LINDER		
17	**813406201**	1	HOSE ASSEMBLY		
18	**803089123**	1	BOOM CYLINDER		
19	**813406144**	1	HOSE ASSEMBLY		
20	**805048006**	2	BOLT M10×30	GB/T16674.1-2004	
21	**803100741**	1	SPLICE		
22	**803103775**	2	SPLICE		

402207698 PIPE CLIP ASSEMBLY

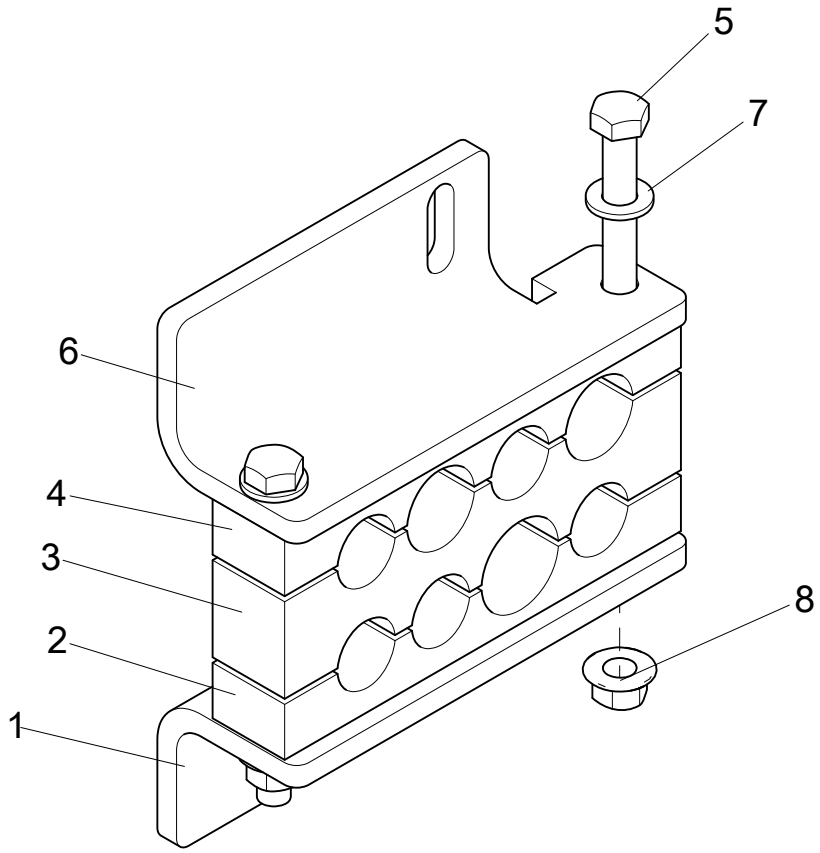

402207698 PIPE CLIP ASSEMBLY

402208085 BOOM PIPELINE

No.	PART NUMBER	QTY	NAME	NOTE	PAGE
1	**402207705**	1	PIPE CLAMP MOUNTING PLATE		
2	**402207702**	1	PIPE CLIP		
3	**402207701**	1	PIPE CLIP		
4	**402207700**	1	PIPE CLIP		
5	**805000073**	2	BOLT M10×115	GB/T5782-2000	
6	**402207699**	1	PIPE CLAMP MOUNTING PLATE		
7	**805300017**	2	SPRING WASHER 10	GB/T97.1-2002	
8	**805238533**	2	NUT 10	GB/T6177.1-2000	

402210651 PIPE CLIP ASSEMBLY

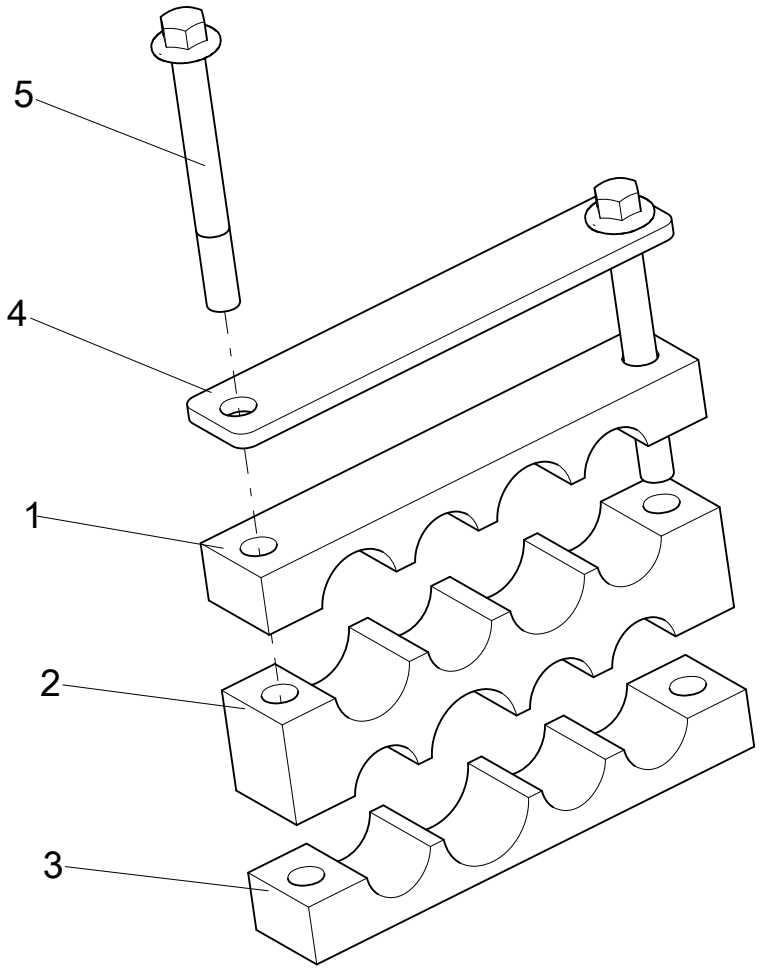

402210651 PIPE CLIP ASSEMBLY

402208085 BOOM PIPELINE

No.	PART NUMBER	QTY	NAME	NOTE	PAGE
1	**402207700**	1	PIPE CLIP		
2	**402207701**	1	PIPE CLIP		
3	**402207702**	1	PIPE CLIP		
4	**402210652**	1	COVER		
5	**805048015**	2	BOLT M10×90 (DACROMET)	GB/T16674.1-2004	

803086391 BUCKET CYLINDER

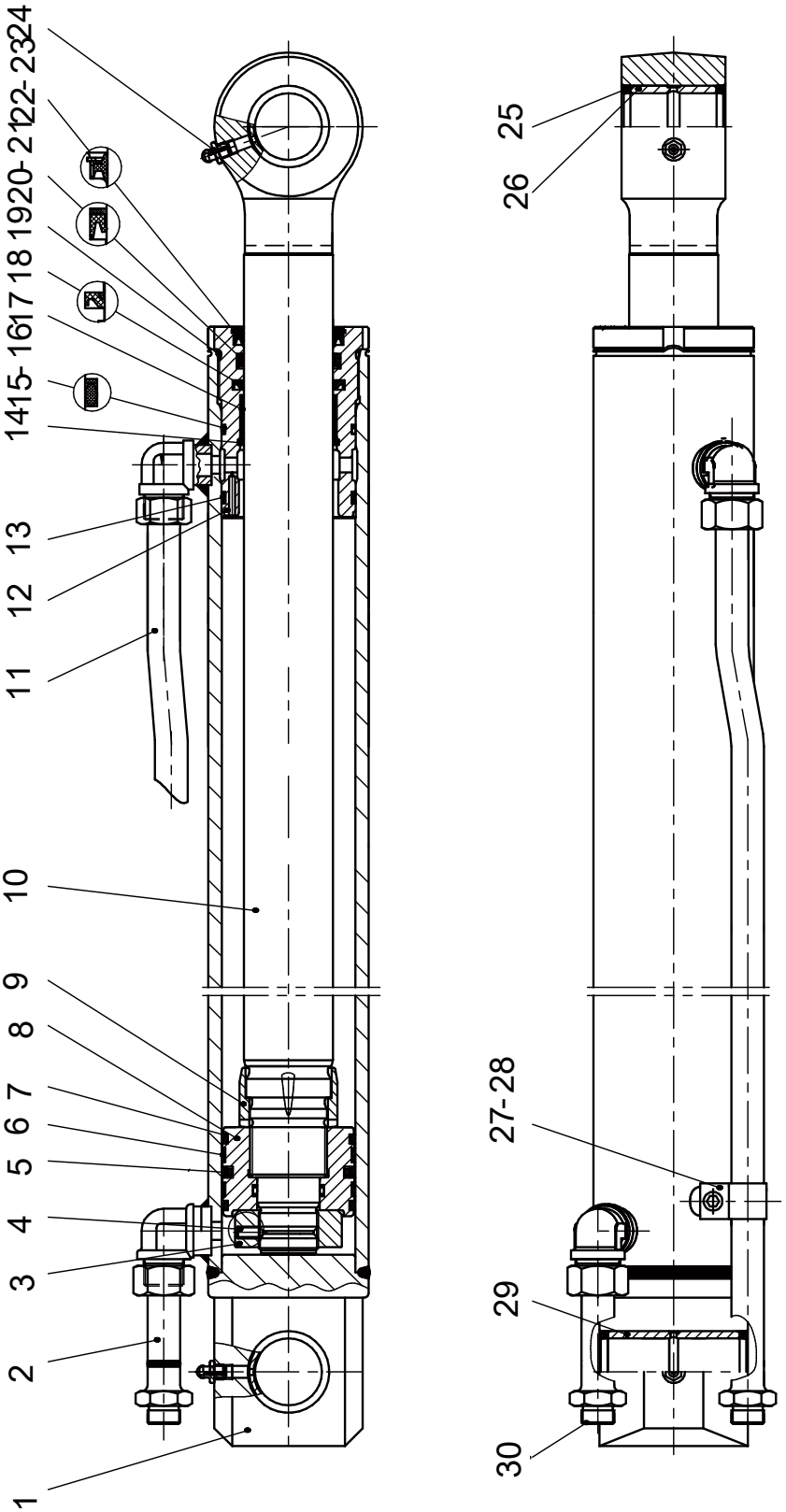

803086391 BUCKET CYLINDER

402208085 BOOM PIPELINE

No.	PART NUMBER	QTY	NAME	NOTE	PAGE
1	**910602099**	1	CYLINDER		
2	**926107832**	1	OIL PIPE ASSY1		
3	**910302862**	1	NUT		
4	**805104504**	1	SCREWM12×1.75×110	GB/T78-2007	
5	**803195125**	1	SEAL RING	75×90×7.3	
6	**803195124**	2	SUPPORT RING 90×85×9.5	90×85×9.5	
7	**803195123**	2	BEARING SEAL	82×90×6	
8	**910302861**	1	PISTON		
9	**910302860**	1	CUSHION SLEEVE		
10	**910602093**	1	PISTON POLE		
11	**926107835**	1	OIL PIPE ASSY2		
12	**910302853**	1	SLEEVE GUIDE		
13	**803195215**	1	DUMBBELL SEAL	85.7×90.5×7.3	
14	**805403098**	1	SEPARATE BUSH 65	GB/T895.1-1986	
15	**803195213**	1	SEPARATE BUSH 90.5×85.7×1.25	90.5×85.7×1.25	
16	**803195214**	1	O-RING	84.4×3.1	
17	**915302903**	1	SLIDING BEARING	60×65×30	
18	**803195212**	1	CUSHION RING	60×75.5×6	
19	**803195118**	1	O-RING	95×3.1	
20	**803195218**	1	SHAFT SEAL 60×70×6	60×70×6	
21	**803195210**	1	SEPARATE BUSH 60×70×3	60×70×3	
22	**803195208**	1	DUSTPROOF WASHER 60×74×8×11	60×74×8×11	
23	**910302040**	1	SEPARATE BUSH5		
24	**801100336**	2	OIL CUP M10×1	JB/T7940.1-1995	
25	**803276765**	4	DUSTPROOF WASHER 2	45×55×5	
26	**910602097**	1	BUSH		
27	**910302006**	1	PIPE CLAMP ASSY		
28	**805100151**	1	SCREW M10×16	GB/T70.1-2008	

803086391 BUCKET CYLINDER

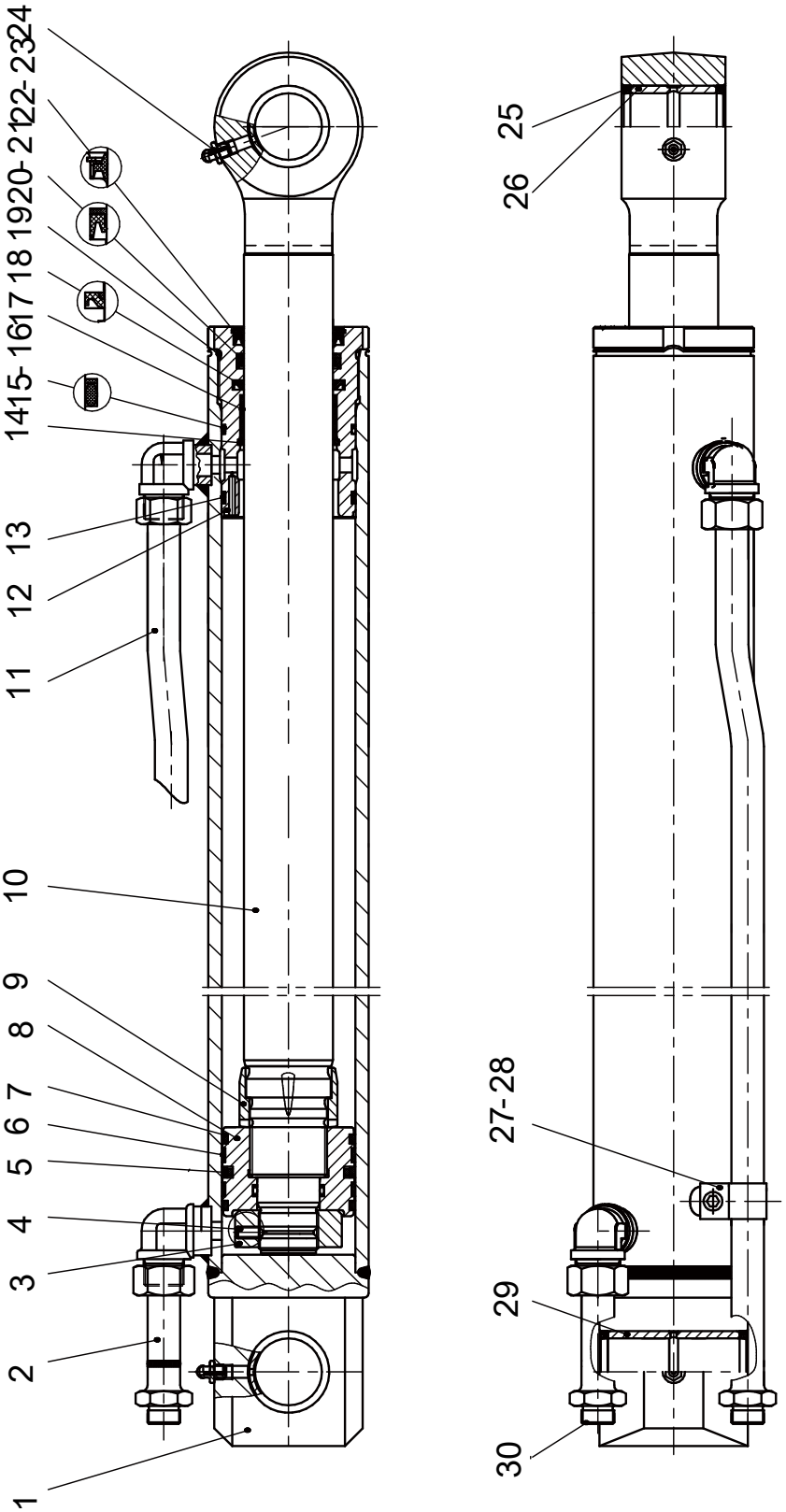

803086391 BUCKET CYLINDER

402208085 BOOM PIPELINE

No.	PART NUMBER	QTY	NAME	NOTE	PAGE
29	**910602098**	2	BUSH		
30	**801971333**	1	PLASTIC TREADED PLUG 1		
	910602096	1	XC870HK.3.1.2.1.3 SEALING PACKAGE	INCLUDING PARTS OF 5、6、7、13、15、16、18、19、20、21、22、25 /INCLUDE 5、6、7、13、15、16、18、19、20、21、22、25 ETC.	

803086389 AMCY LINDER

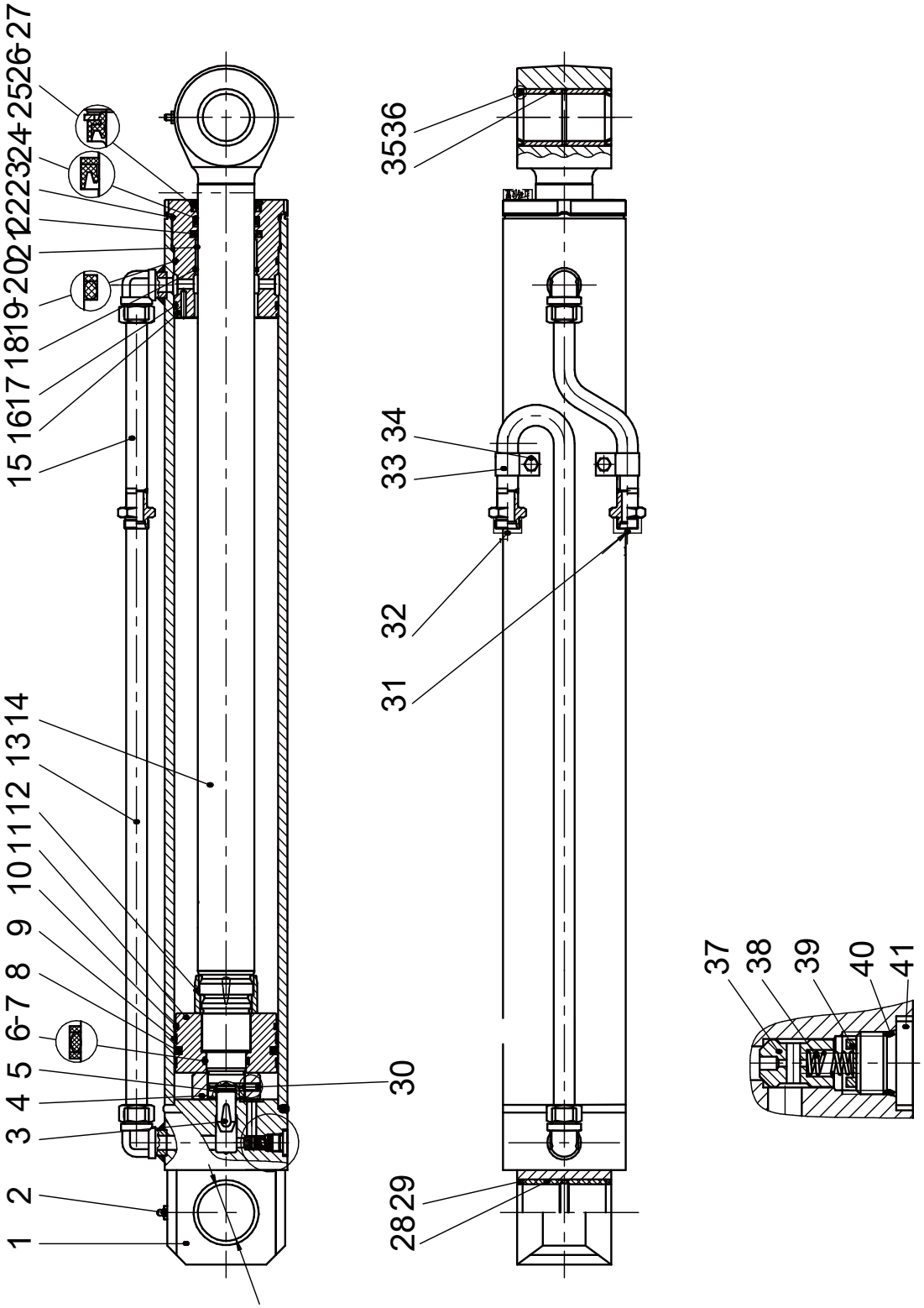

803086389 AMCY LINDER

402208085 BOOM PIPELINE

No.	PART NUMBER	QTY	NAME	NOTE	PAGE
1	**910602123**	1	CYLINDER		
2	**801100336**	2	OIL CUP M10×1	JB/T7940.1-1995	
3	**910301987**	1	CUSHION PLUNGER		
4	**910602136**	1	NUT		
5	**910301986**	1	RETAINER RING WIRE		
6	**803195217**	1	O-RING	41.7×3.5	
7	**803195216**	2	SEPARATE BUSH 42×48×1.25	42×48×1.25	
8	**803195135**	1	SEAL RING 94×110×7.3	94×110×7.3	
9	**803195134**	2	BACK-UP RING	110×105×9.5	
10	**803195133**	1	ANTI-POLLUTION RING 102×110×6	102×110×6	
11	**910303611**	1	PISTON		
12	**910303612**	1	CUSHION SLEEVE		
13	**926107846**	1	OIL PIPE ASSYI		
14	**910602129**	1	PISTON POLE		
15	**926107848**	1	OIL PIPE ASSYII		
16	**910303625**	1	SLEEVE GUIDE		
17	**803195132**	1	DUMBBELL SEAL	105.1×110.5×7.7	
18	**805403098**	1	SEPARATE BUSH 65	GB/T895.1-1986	
19	**803199983**	1	ORING 92.5×5.3	101.19×3.53	
20	**803195137**	1	SEPARATE BUSH 105.1×110.5×1.5	105.1×110.5×1.5	
21	**915302903**	1	SLIDING BEARING	60×65×30	
22	**803195212**	1	CUSHION RING	60×75.5×6	
23	**803195131**	1	O-RING	115×3.1	
24	**803195218**	1	SHAFT SEAL 60×70×6	60×70×6	
25	**803195210**	1	SEPARATE BUSH 60×70×3	60×70×3	
26	**803195208**	1	DUSTPROOF WASHER 60×74×8×11	60×74×8×11	
27	**910302040**	1	SEPARATE BUSH5		
28	**910602142**	2	BEARING		

803086389 AMCY LINDER

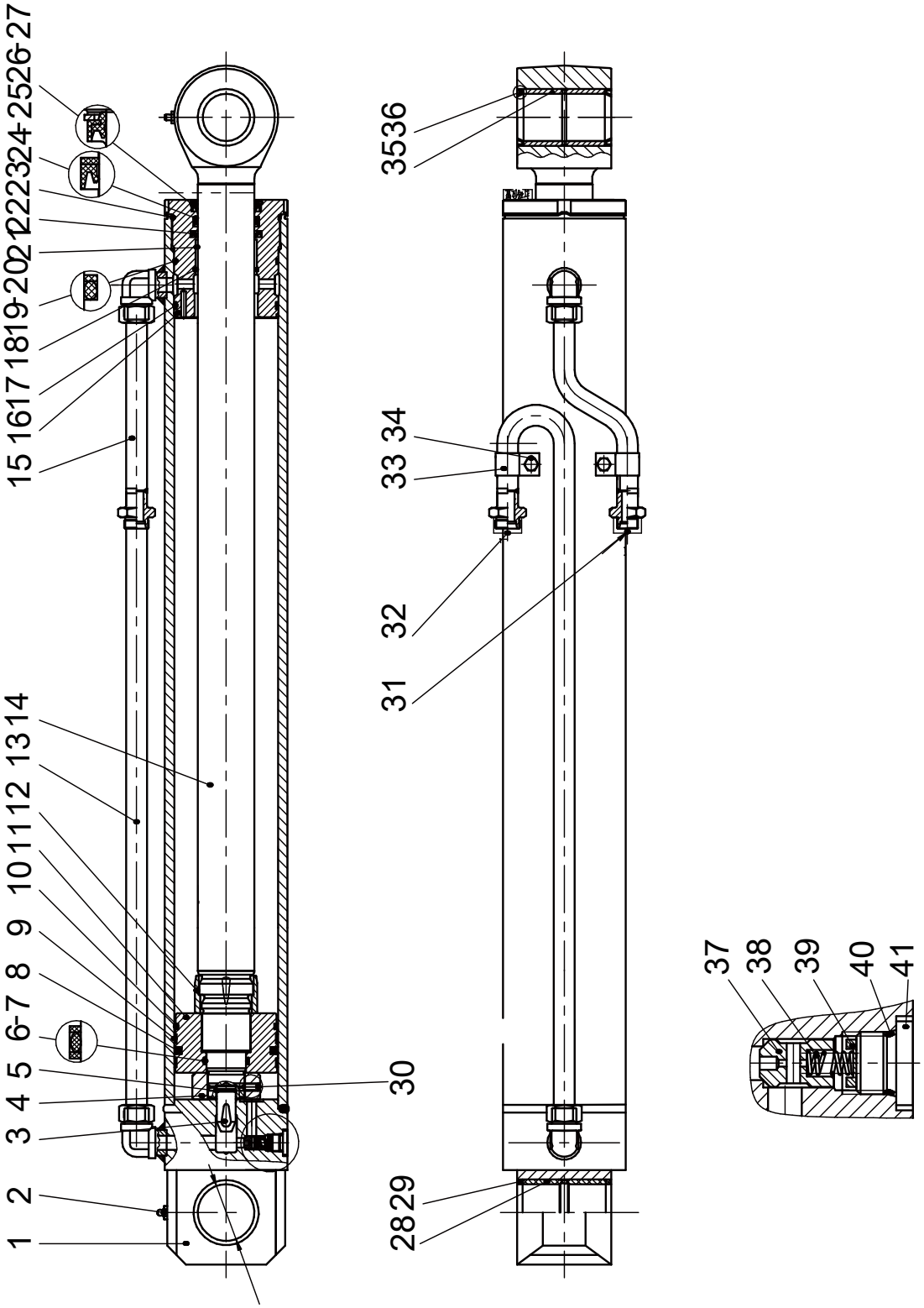

803086389 AMCY LINDER

402208085 BOOM PIPELINE

No.	PART NUMBER	QTY	NAME	NOTE	PAGE
29	**803195114**	2	DUSTPROOF WASHER 60×70×5	60×70×5	
30	**801971333**	1	PLASTIC TREADED PLUG 1		
31	**801971335**	1	PLASTIC TREADED PLUG 2		
32	**805104504**	1	SCREWM12×1.75×110	GB/T78-2007	
33	**910302006**	2	PIPE CLAMP ASSY		
34	**805100151**	2	SCREW M10×16	GB/T70.1-2008	
35	**910602112**	2	BEARING		
36	**803195128**	2	DUSTPROOF WASHER 50×60×5	50×60×5	
37	**910303627**	1	SPOOL		
38	**910301877**	1	SPRING		
39	**910303091**	1	SPACER		
40	**803195116**	1	O-RING	13.8×2.4	
41	**910301875**	1	SCREW PLUG		
	910602137	1	SEALING PACKAGE	INCLUDING PARTS OF 6、7、8、9、10、17、19、20、22、23、24、25、26、29、34、38 /INCLUDE 6、7、8、9、10、17、19、20、22、23、24、25、26、29、34、38 ETC.	

803089123 BOOM CYLINDER

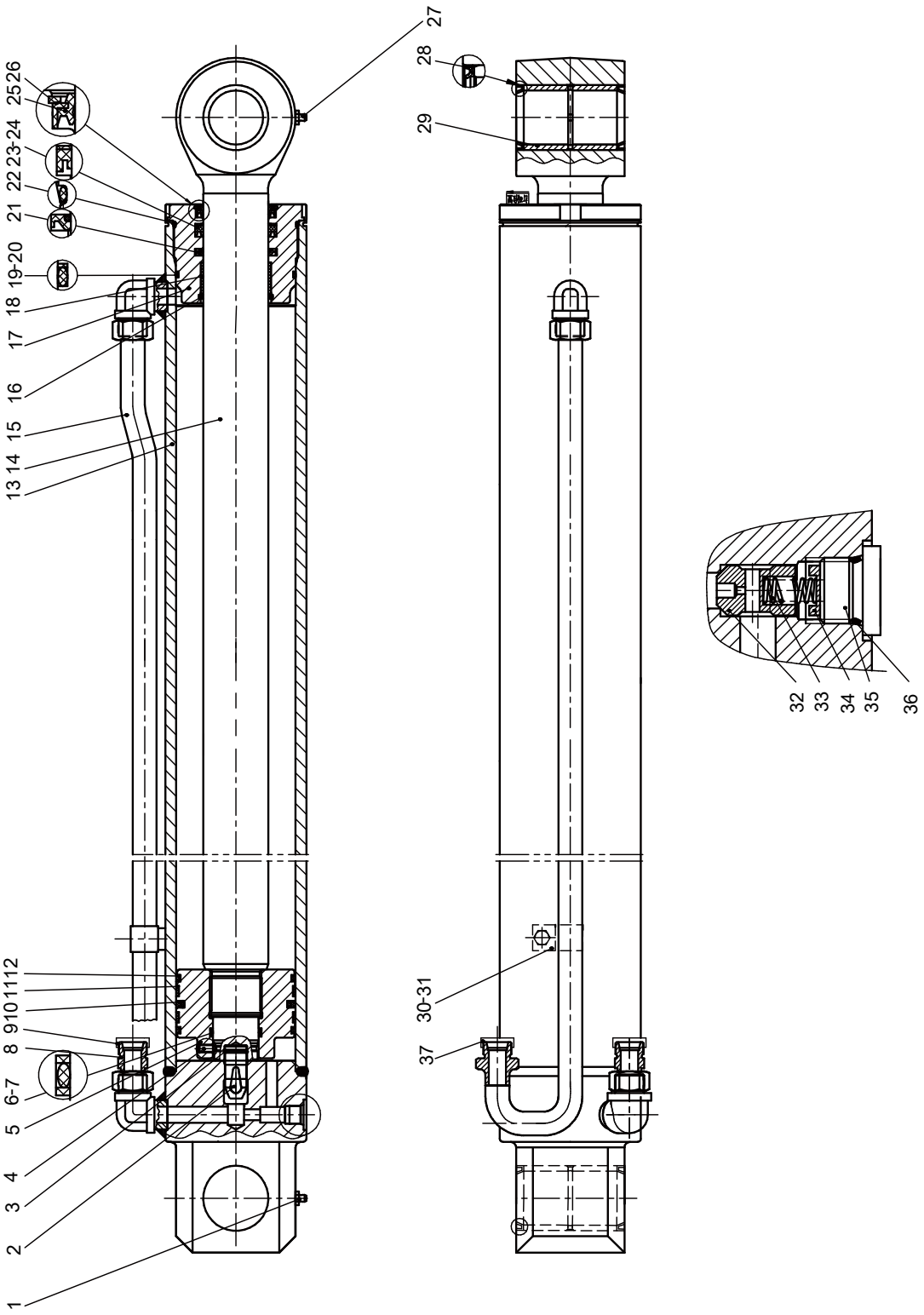

803089123 BOOM CYLINDER

402208085 BOOM PIPELINE

No.	PART NUMBER	QTY	NAME	NOTE	PAGE
1	**801103225**	2	GREASE NIPPLE	JB/T 7940.2-1995	
2	**910301987**	1	CUSHION PLUNGER		
3	**910301986**	1	RETAINER RING WIRE		
4	**805104504**	1	SCREWM12×1.75×110	GB/T78-2007	
5	**910302050**	1	PISTON		
6	**803195217**	1	O-RING	41.7×3.5	
7	**803195216**	2	SEPARATE BUSH 42×48×1.25	42×48×1.25	
8	**927300785**	1	STRAIGHT COMBINATION CONNECTOR		
9	**803195221**	1	SEAL RING	110×96×6.3	
10	**803195134**	2	BACK-UP RING	110×105×9.5	
11	**803195133**	2	ANTI-POLLUTION RING 102×110×6	102×110×6	
12	**801971377**	1	PLASTIC SCREW THREAD SEALED CAP M26×1.5	13.8×2.4	
13	**910602288**	1	CYLINDER		
14	**910602108**	1	XC870HK.3.1.2.1.1.03 PISTON POLE		
15	**910602284**	1	OIL PIPE		
16	**805403098**	1	SEPARATE BUSH 65	GB/T895.1-1986	
17	**910302041**	1	SLEEVE GUIDE		
18	**915302903**	1	SLIDING BEARING	60×65×30	
19	**803195219**	1	O-RING	104.4×3.1	
20	**803195220**	1	SEPARATE BUSH 105.8×110.5×1.25	105.8×110.5×1.25	
21	**803195212**	1	CUSHION RING	60×75.5×6	
22	**803195131**	1	O-RING	115×3.1	
23	**803195218**	1	SHAFT SEAL 60×70×6	60×70×6	
24	**803195210**	1	SEPARATE BUSH 60×70×3	60×70×3	
25	**803195208**	1	DUSTPROOF WASHER 60×74×8×11	60×74×8×11	
26	**910302040**	1	SEPARATE BUSH5		
27	**801100336**	1	OIL CUP M10×1	JB/T7940.1-1995	
28	**803195128**	4	DUSTPROOF WASHER 50×60×5	50×60×5	

803089123 BOOM CYLINDER

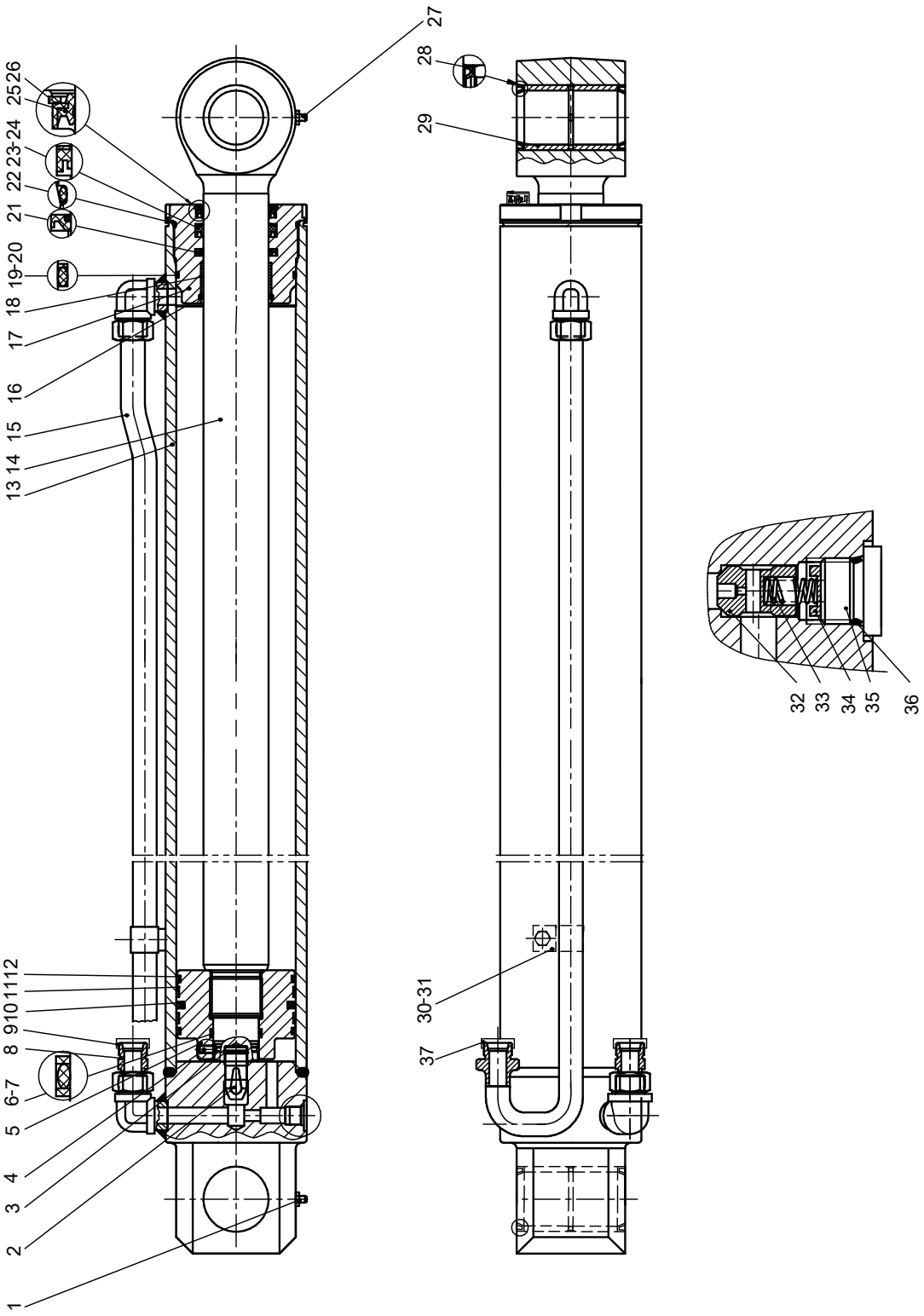

803089123 BOOM CYLINDER

402208085 BOOM PIPELINE

No.	PART NUMBER	QTY	NAME	NOTE	PAGE
29	**910602112**	4	BEARING		
30	**910302006**	2	PIPE CLAMP ASSY		
31	**805100151**	2	SCREW M10×16	GB/T70.1-2008	
32	**910301990**	1	XG6.0A.DG-08 SPOOL		
33	**910301877**	1	SPRING		
34	**910303091**	1	SPACER		
35	**910301875**	1	SCREW PLUG		
36	**803195116**	1	O-RING		
37	**801971374**	1	PLASTIC SCREW THREAD SEALED CAP M22×1.5		
	914901421	1	XT870L.3.1.2.1A SEALING PACKAGE	INCLUDING PARTS OF 6、7、9、10、11、12、19、20、21、22、23、24、25 /INCLUDE 6、7、9、10、11、12、19、20、21、22、23、24、25 ETC.	

402208123 OUTRIGGER HYDRAULIC SYSTEM

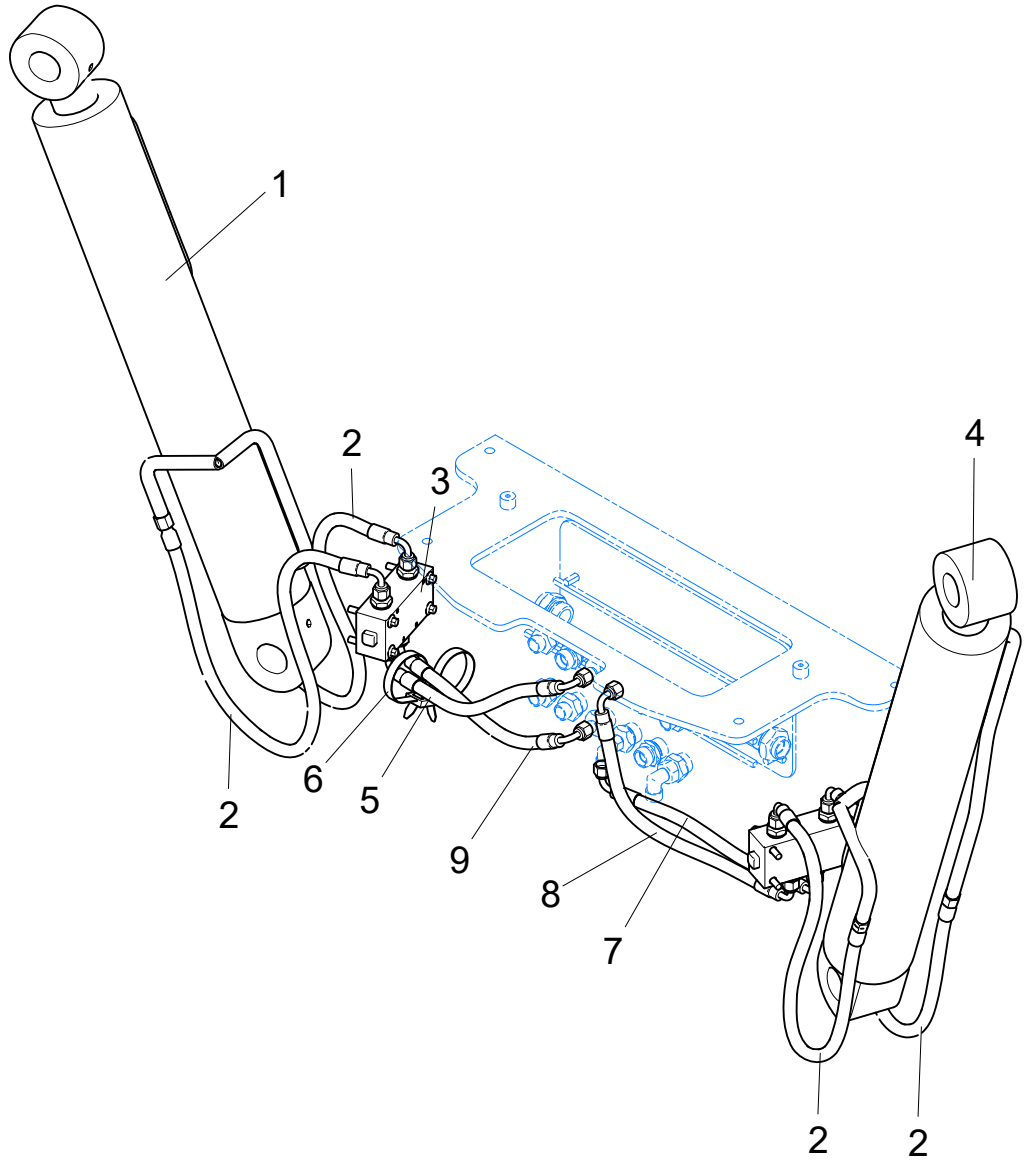

402208123 OUTRIGGER HYDRAULIC SYSTEM

402216293 DIGGING HYDRAULIC SYSTEM

No.	PART NUMBER	QTY	NAME	NOTE	PAGE
1	**804000344**	1	RIGHT OUTRIGGER CYLINDER		
2	**803184390**	4	HOSE ASSEMBLY		
3	**402214785**	1	HYDRAULIC LOCK ASSEMBLY		
4	**804000343**	1	LEFT OUTRIGGER CYLINDER		
5	**804476565**	1	HOSE ASSEMBLY		
6	**801541551**	2	CABLE TIES	NZ6W-13*250	
7	**803308726**	1	HOSE ASSEMBLY		
8	**813406146**	1	HOSE ASSEMBLY		
9	**803380475**	1	HOSE ASSEMBLY		

804000344 RIGHT OUTRIGGER CYLINDER

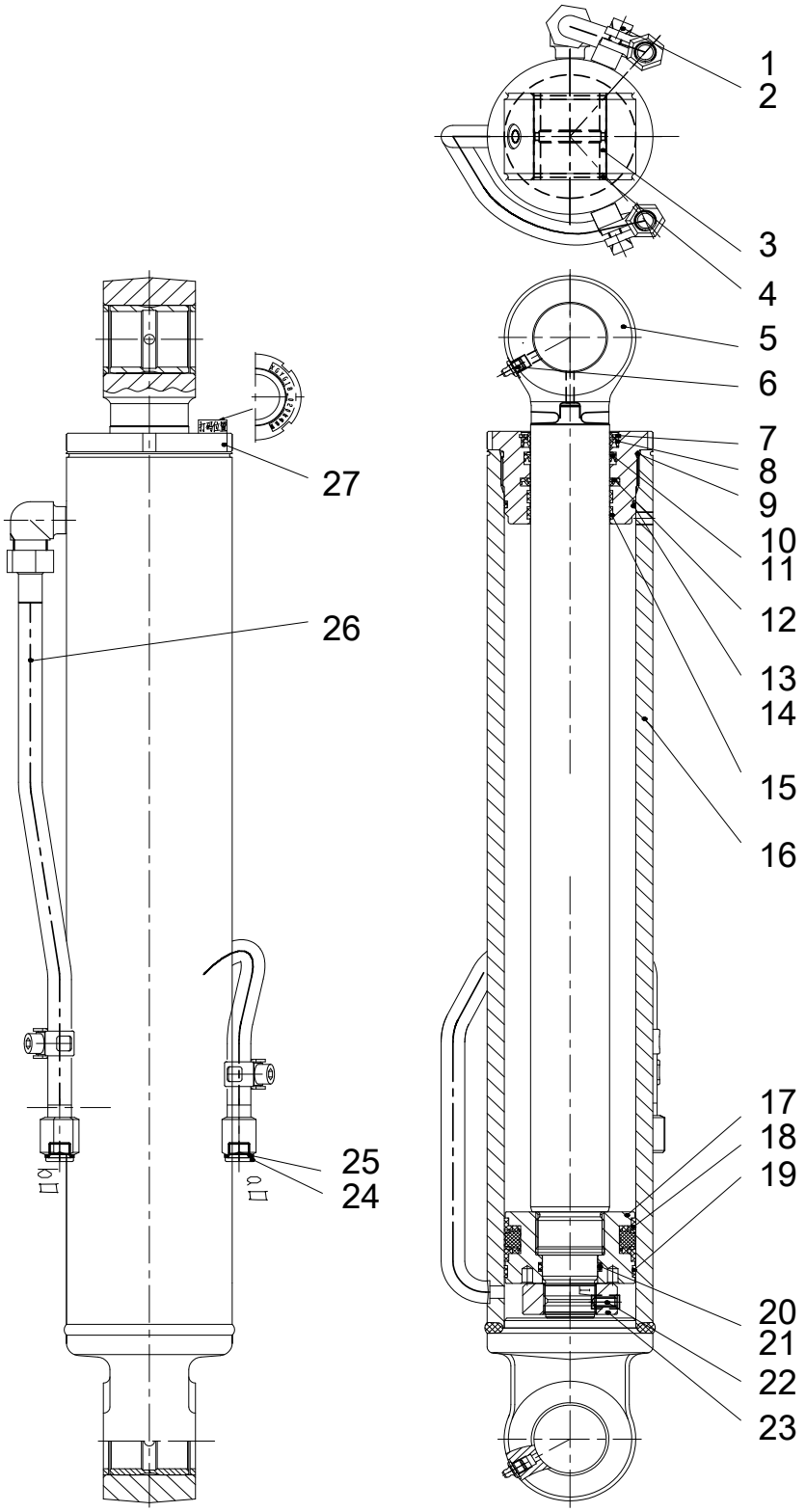

804000344 RIGHT OUTRIGGER CYLINDER

402208123 OUTRIGGER HYDRAULIC SYSTEM

No.	PART NUMBER	QTY	NAME	NOTE	PAGE
1	**805100151**	1	SCREW M10×16	GB/T70.1-2008	
2	**910303128**	1	PIPE CLAMP ASSY		
3	**910603720**	4	XGYG18_020-09 BEARING		
4	**803305062**	4	DUSTPROOF WASHER 45×55×4		
5	**910603714**	1	XGYG18_020_03 PISTON POLE		
6	**801100336**	2	OIL CUP M10×1	JB/T7940.1-1995	
7	**910302040**	1	SEPARATE BUSH5		
8	**803195208**	1	DUSTPROOF WASHER 60×74×8×11		
9	**803183344**	1	O-RING		
10	**803195210**	1	SEPARATE BUSH 60×70×3		
11	**803195218**	1	SHAFT SEAL 60×70×6		
12	**803195212**	1	CUSHION RING		
13	**803195316**	1	SEPARATE BUSH 95.2×100×1.25		
14	**803195145**	1	O-RING		
15	**803195317**	2	BACK-UP RING		
16	**910603707**	1	XGYG18_019_01 CYLINDER		
17	**910603713**	1	XGYG18_020-02 PISTON		
18	**803196430**	1	HOLE SEAL 75×100×22.4		
19	**803195110**	1	SUPPORT RING 100×95×9.5		
20	**803195216**	1	SEPARATE BUSH 42×48×1.25		
21	**803195217**	1	O-RING		
22	**805104504**	1	SCREWM12×1.75×110	GB/T78-2007	
23	**910300758**	1	NUT		
24	**803176270**	1	PLUG SCREW	JB/ZQ4444-2006	
25	**805300026**	2	GASKET 16	JB/T982-1977	
26	**910603718**	1	XGYG18_020_071 OIL PIPE ASSYI		
27	**910603717**	1	XGYG18_020-04 SLEEVE GUIDE		
	910604743	1	SEALING PACKAGE	INCLUDING THE N-O.6,7,8,9,10,11,12,13,-16,17,18,19	

402214785 HYDRAULIC LOCK ASSEMBLY

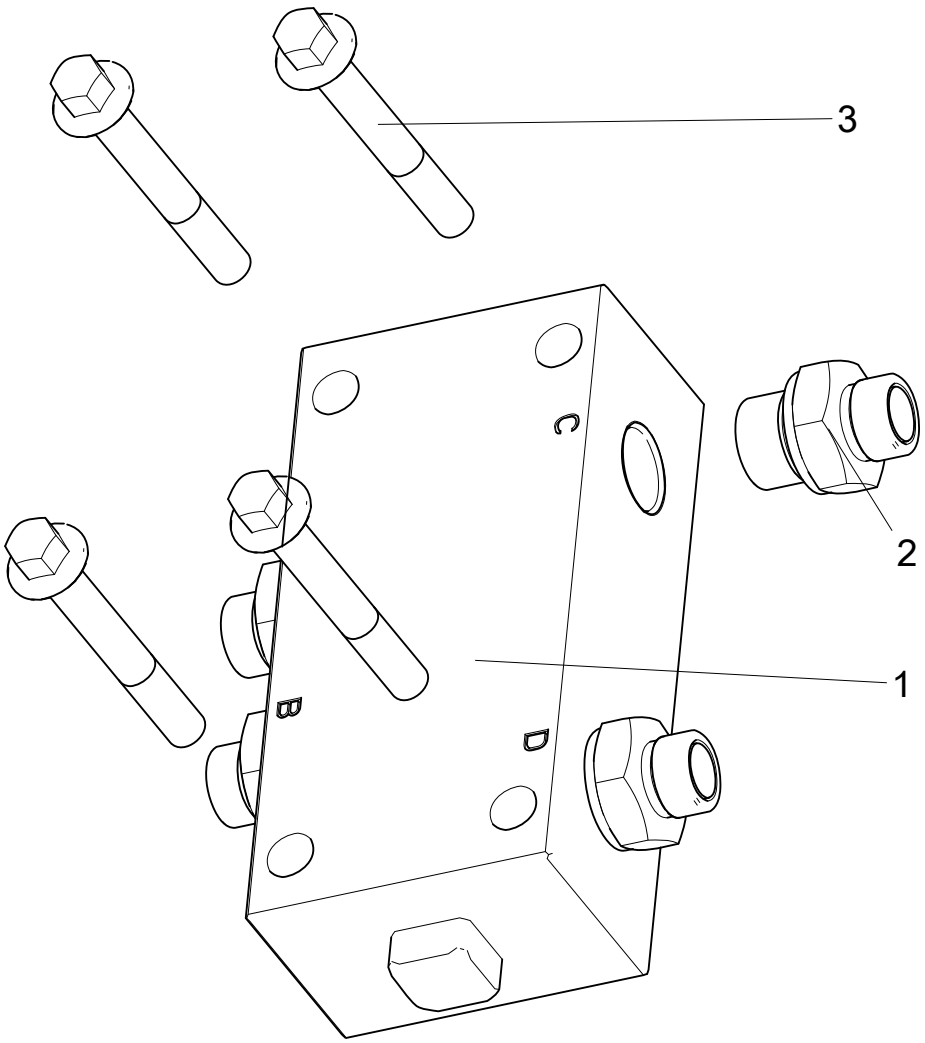

402214785 HYDRAULIC LOCK ASSEMBLY

402208123 OUTRIGGER HYDRAULIC SYSTEM

No.	PART NUMBER	QTY	NAME	NOTE	PAGE
1	**803043473**	1	HYDRAULIC LOCK		
2	**803103529**	1	SPLICE		
3	**805048002**	1	BOLT M8×60(DACROMET)	GB/T16674.1-2004	

804000343 LEFT OUTRIGGER CYLINDER

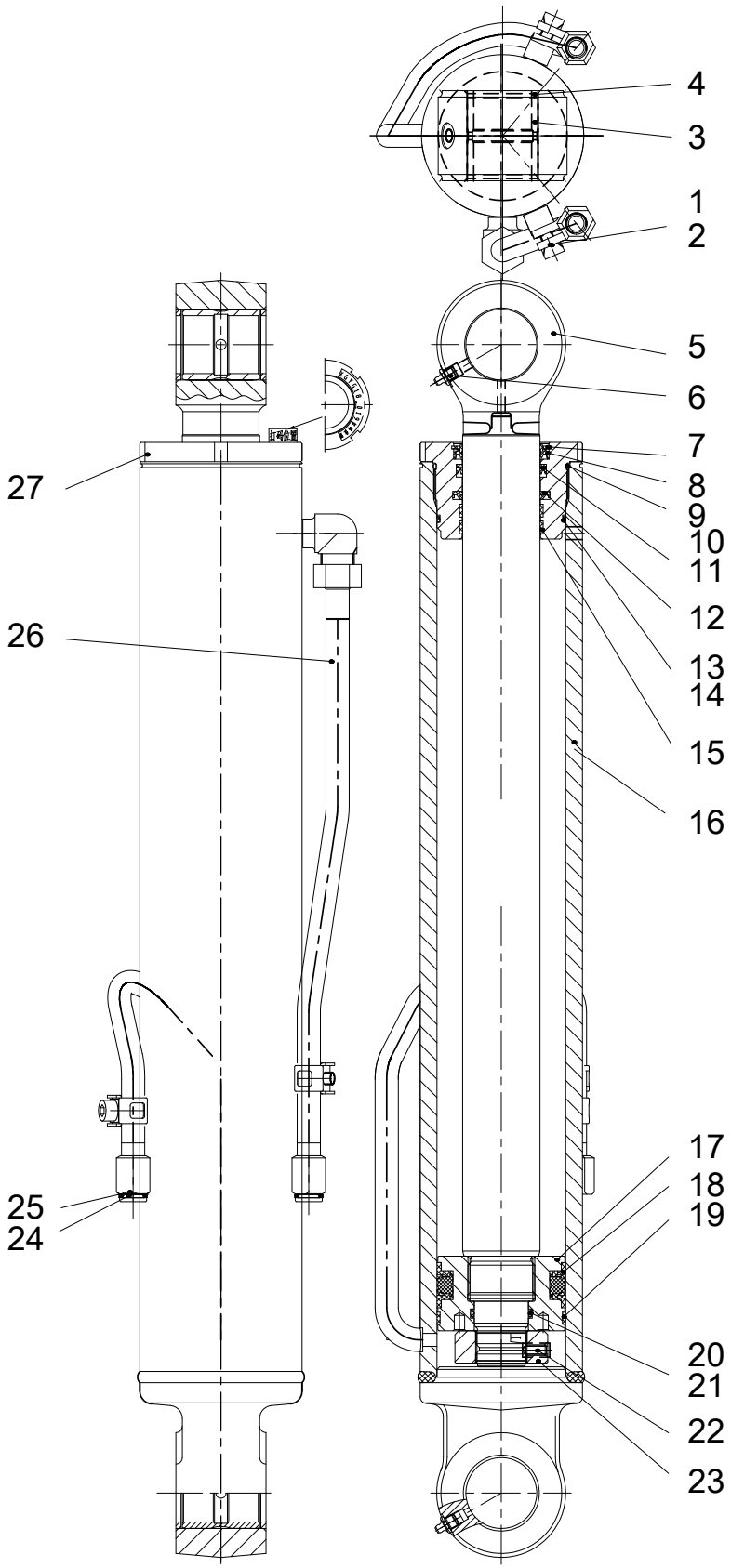

804000343 LEFT OUTRIGGER CYLINDER

402208123 OUTRIGGER HYDRAULIC SYSTEM

No.	PART NUMBER	QTY	NAME	NOTE	PAGE
1	**805100151**	1	SCREW M10×16	GB/T70.1-2008	
2	**910303128**	1	PIPE CLAMP ASSY		
3	**910603720**	4	XGYG18_020-09 BEARING		
4	**803305062**	4	DUSTPROOF WASHER 45×55×4		
5	**910603714**	1	XGYG18_020_03 PISTON POLE		
6	**801100336**	2	OIL CUP M10×1	JB/T7940.1-1995	
7	**910302040**	1	SEPARATE BUSH5		
8	**803195208**	1	DUSTPROOF WASHER 60×74×8×11		
9	**803183344**	1	O-RING		
10	**803195210**	1	SEPARATE BUSH 60×70×3		
11	**803195218**	1	SHAFT SEAL 60×70×6		
12	**803195212**	1	CUSHION RING		
13	**803195316**	1	SEPARATE BUSH 95.2×100×1.25		
14	**803195145**	1	O-RING		
15	**803195317**	2	BACK-UP RING		
16	**910603721**	1	XGYG18_019_01 CYLINDER		
17	**910603713**	1	XGYG18_020-02 PISTON		
18	**803196430**	1	HOLE SEAL 75×100×22.4		
19	**803195110**	1	SUPPORT RING 100×95×9.5		
20	**803195216**	2	SEPARATE BUSH 42×48×1.25		
21	**803195217**	1	O-RING		
22	**805104504**	1	SCREWM12×1.75×110	GB/T78-2007	
23	**910300758**	1	NUT		
24	**803176270**	1	PLUG SCREW	JB/ZQ4444-2006	
25	**805300026**	2	GASKET 16	JB/T982-1977	
26	**910603718**	1	XGYG18_020_071 OIL PIPE ASSYI		
27	**910603717**	1	XGYG18_020-04 SLEEVE GUIDE		
	910604743	1	SEALING PACKAGE	INCLUDING THE N-O.6,7,8,9,10,11,12,13,-16,17,18,19	

402208152 DIGGING CONTROL SYSTEM

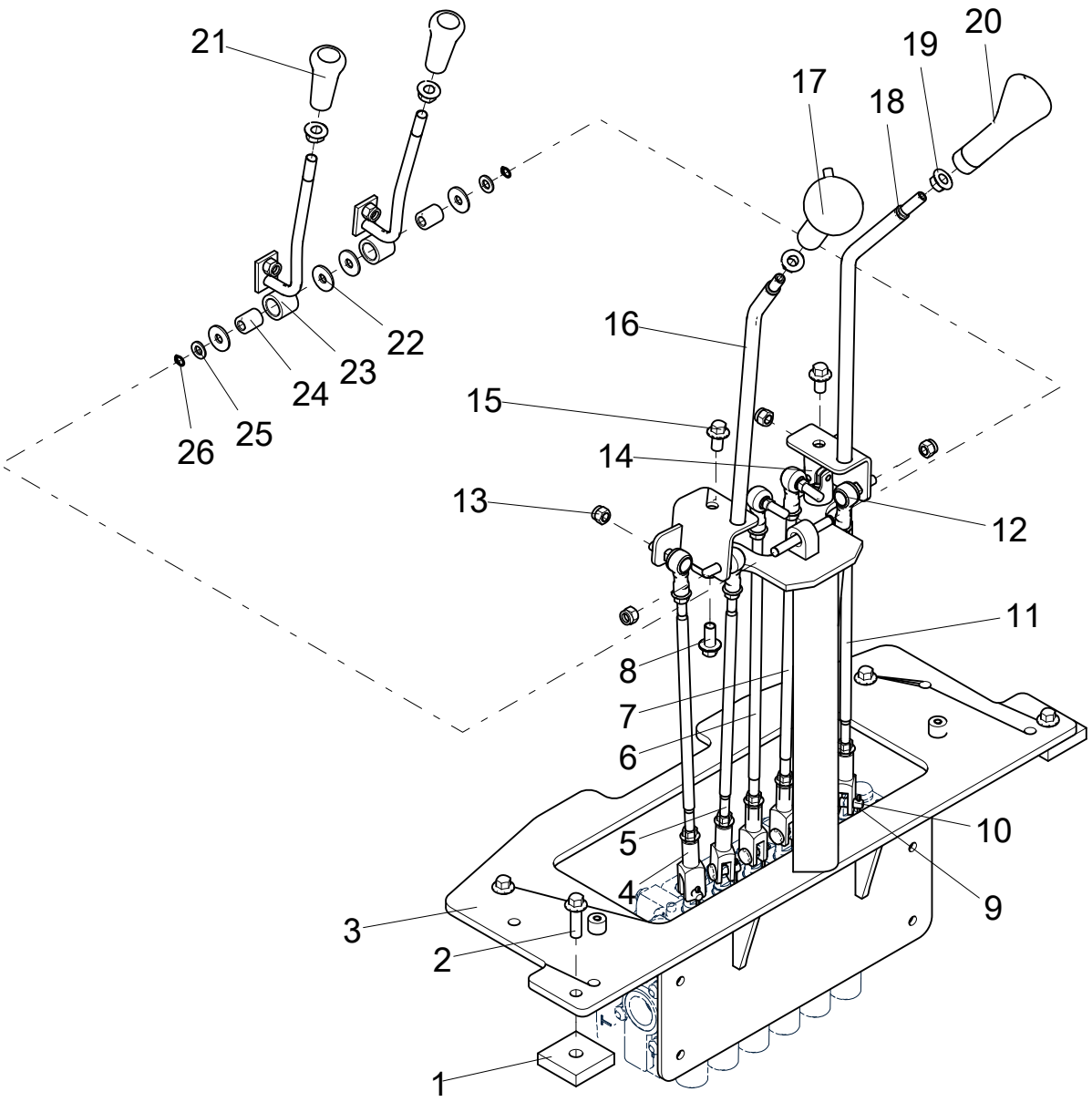

402208152 DIGGING CONTROL SYSTEM

402216293 DIGGING HYDRAULIC SYSTEM

No.	PART NUMBER	QTY	NAME	NOTE	PAGE
1	**402200327**	4	CUSHION		
2	**805048018**	4	BOLT M12×40	GB/T16674.1-2004	
3	**402208133**	1	INSTRLLATION BRACET FOR EXCAVATION VALVE		
4	**402208145**	1	COUPLING		
5	**402208144**	1	COUPLING		
6	**402208146**	1	COUPLING		
7	**402208147**	1	COUPLING		
8	**805004764**	2	BOLT M12×25 (DACROMET)	GB/T16674.1-2004	
9	**805600316**	6	PIN 3.2×28	GB/T91-2000	
10	**805600068**	6	PIN 10×30	GB/T882-2008	
11	**402208148**	1	COUPLING		
12	**402208149**	1	COUPLING		
13	**805201515**	6	NUT M10	GB/T6182-2010	
14	**402204025**	2	CANDAN UNIVERSAL JOINT		
15	**805047714**	2	BOLT M12×20 (DACROMET)	GB/T16674.1-2004	
16	**402208140**	1	LEFT OPERATION MECHANISM		
17	**801543239**	1	HANDLE BALL		
18	**402208142**	1	RIGHT OPERATION MECHANISM		
19	**805204006**	4	NUT 12	GB/T6177.1-2000	
20	**801535301**	1	HAND SHANK		
21	**801540418**	2	HAND SHANK		
22	**805300102**	4	SPRING WASHER 10	GB/T96.1-2002	
23	**402208137**	2	CONTROL MECHANISM OF LEG		
24	**402208150**	2	SHAFT SLEEVE		
25	**805300017**	2	SPRING WASHER 10	GB/T97.1-2002	
26	**805400056**	2	SEPARATE BUSH 10	GB/T894.1-1986	

402208145 COUPLING

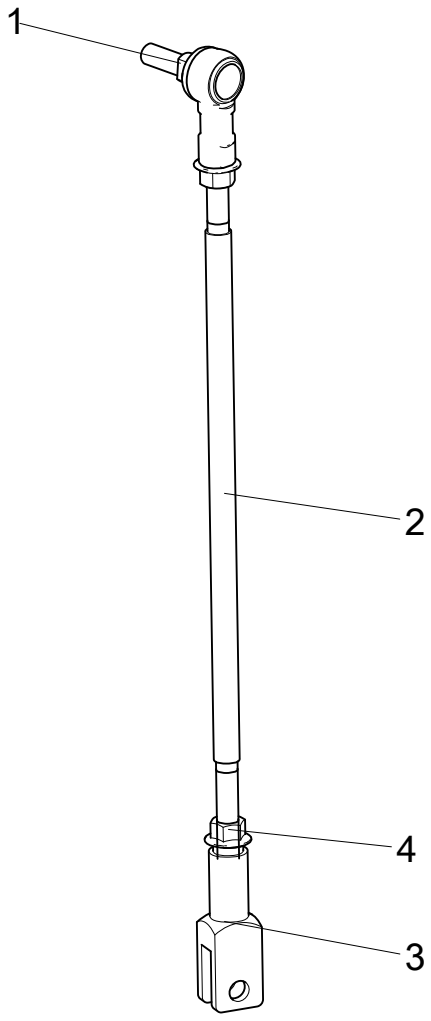

402208145 COUPLING

402208152 DIGGING CONTROL SYSTEM

No.	PART NUMBER	QTY	NAME	NOTE	PAGE
1	**402204026**	1	BALL JOINT		
2	**402208143**	1	BAR		
3	**402200926**	1	FORK		
4	**805238533**	2	NUT 10	GB/T6177.1-2000	

402208144 COUPLING

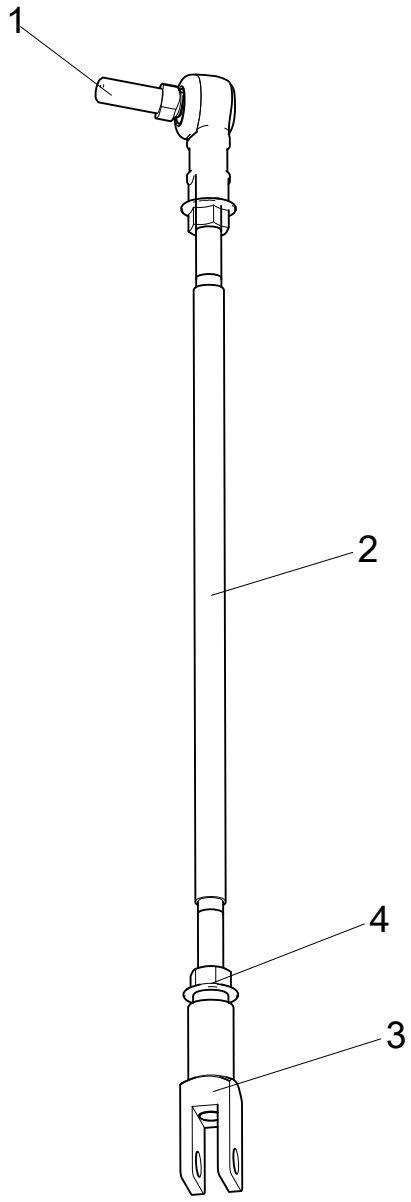

402208144 COUPLING

402208152 DIGGING CONTROL SYSTEM

No.	PART NUMBER	QTY	NAME	NOTE	PAGE
1	**402204026**	1	BALL JOINT		
2	**402208143**	1	BAR		
3	**402200926**	1	FORK		
4	**805238533**	2	NUT 10	GB/T6177.1-2000	

402208146 COUPLING

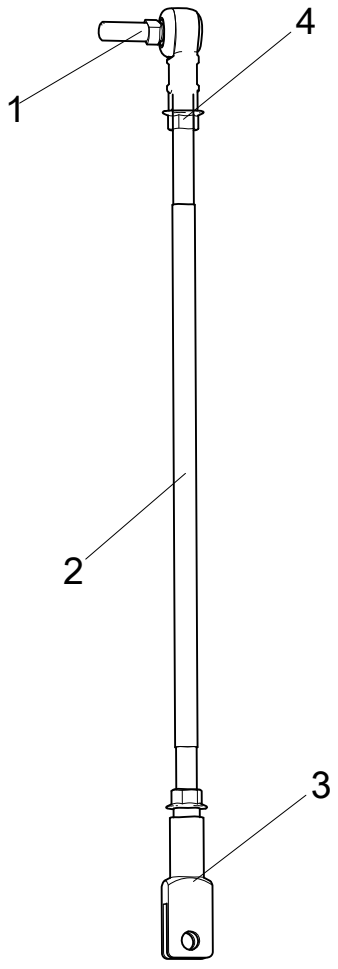

402208146 COUPLING

402208152 DIGGING CONTROL SYSTEM

No.	PART NUMBER	QTY	NAME	NOTE	PAGE
1	**402204026**	1	BALL JOINT		
2	**402205563**	1	BAR		
3	**402200926**	1	FORK		
4	**805238533**	2	NUT 10	GB/T6177.1-2000	

402208147 COUPLING

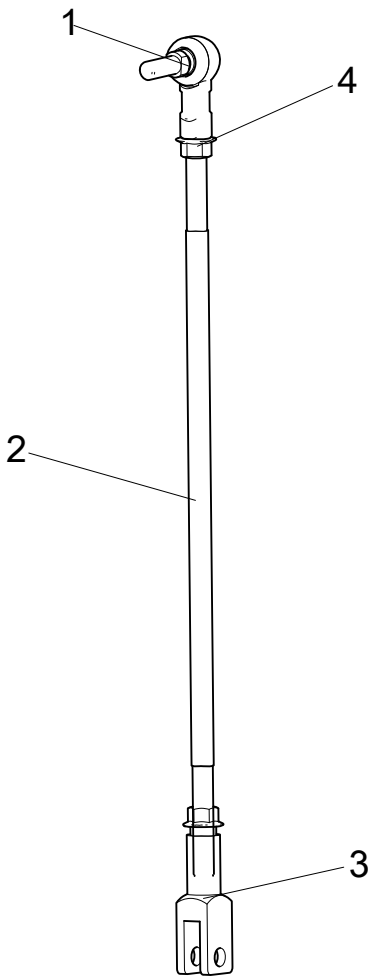

402208147 COUPLING

402208152 DIGGING CONTROL SYSTEM

No.	PART NUMBER	QTY	NAME	NOTE	PAGE
1	**402204026**	1	BALL JOINT		
2	**402205563**	1	BAR		
3	**402200926**	1	FORK		
4	**805238533**	2	NUT 10	GB/T6177.1-2000	

402208148 COUPLING

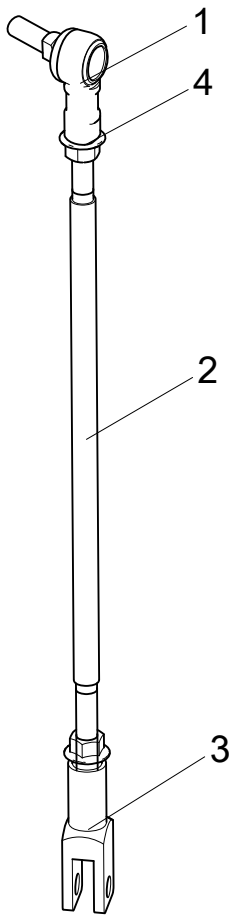

402208148 COUPLING

402208152 DIGGING CONTROL SYSTEM

No.	PART NUMBER	QTY	NAME	NOTE	PAGE
1	**402204026**	1	BALL JOINT		
2	**402208143**	1	BAR		
3	**402200926**	1	FORK		
4	**805238533**	2	NUT 10	GB/T6177.1-2000	

402208149 COUPLING

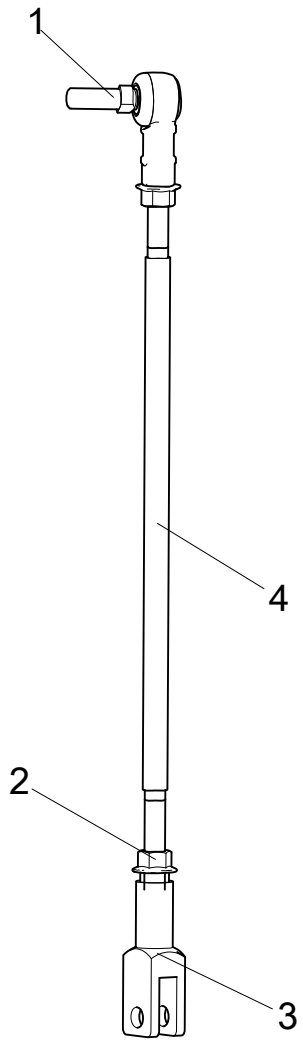

402208149 COUPLING

402208152 DIGGING CONTROL SYSTEM

No.	PART NUMBER	QTY	NAME	NOTE	PAGE
1	**402204026**	1	BALL JOINT		
2	**805238533**	2	NUT 10	GB/T6177.1-2000	
3	**402200926**	1	FORK		
4	**402208143**	1	BAR		

402208122 ROTARY HYDRAULIC SYSTEM

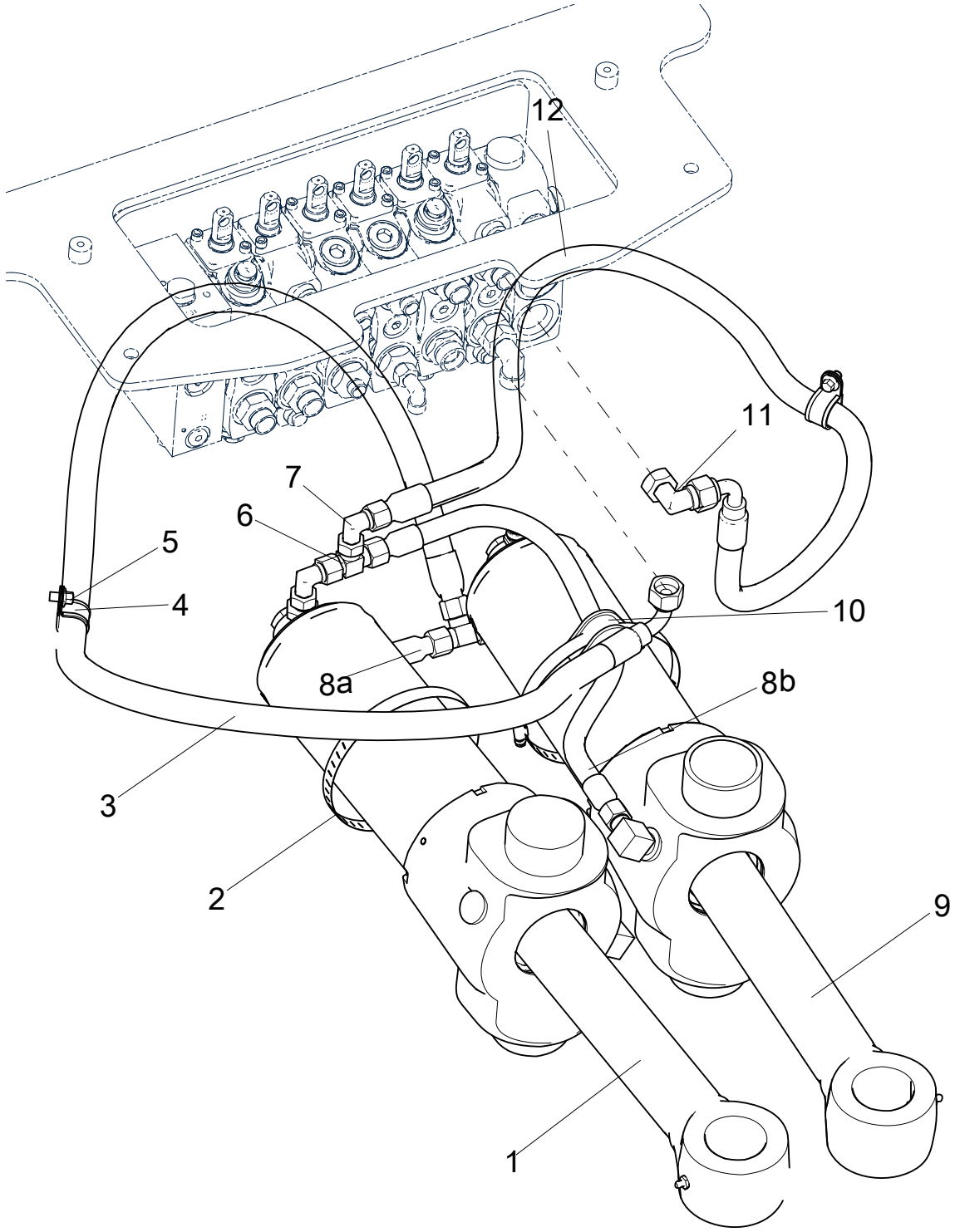

402208122 ROTARY HYDRAULIC SYSTEM

402216293 DIGGING HYDRAULIC SYSTEM

No.	PART NUMBER	QTY	NAME	NOTE	PAGE
1	**804000338**	1	RIGHT SLEWING CYLINDER		
2	**801902720**	2	HOSE CLAMP B130-152	QC/T619-1999	
3	**813406154**	1	HOSE ASSEMBLY		
4	**803199329**	2	CUTTING FERRULE Φ26	TJBC	
5	**805047997**	2	BOLT M8×12(DACROMET)	GB/T16674.1-2004	
6	**803105415**	2	SPLICE		
7	**803107607**	3	SPLICE		
8	**813406157**	2	HOSE ASSEMBLY		
9	**804000337**	1	LEFT SLEWING CYLINDER		
10	**402209561**	2	PIPE CLIP		
11	**803103775**	1	SPLICE		
12	**804476566**	1	HOSE ASSEMBLY		

804000338 RIGHT SLEWING CYLINDER

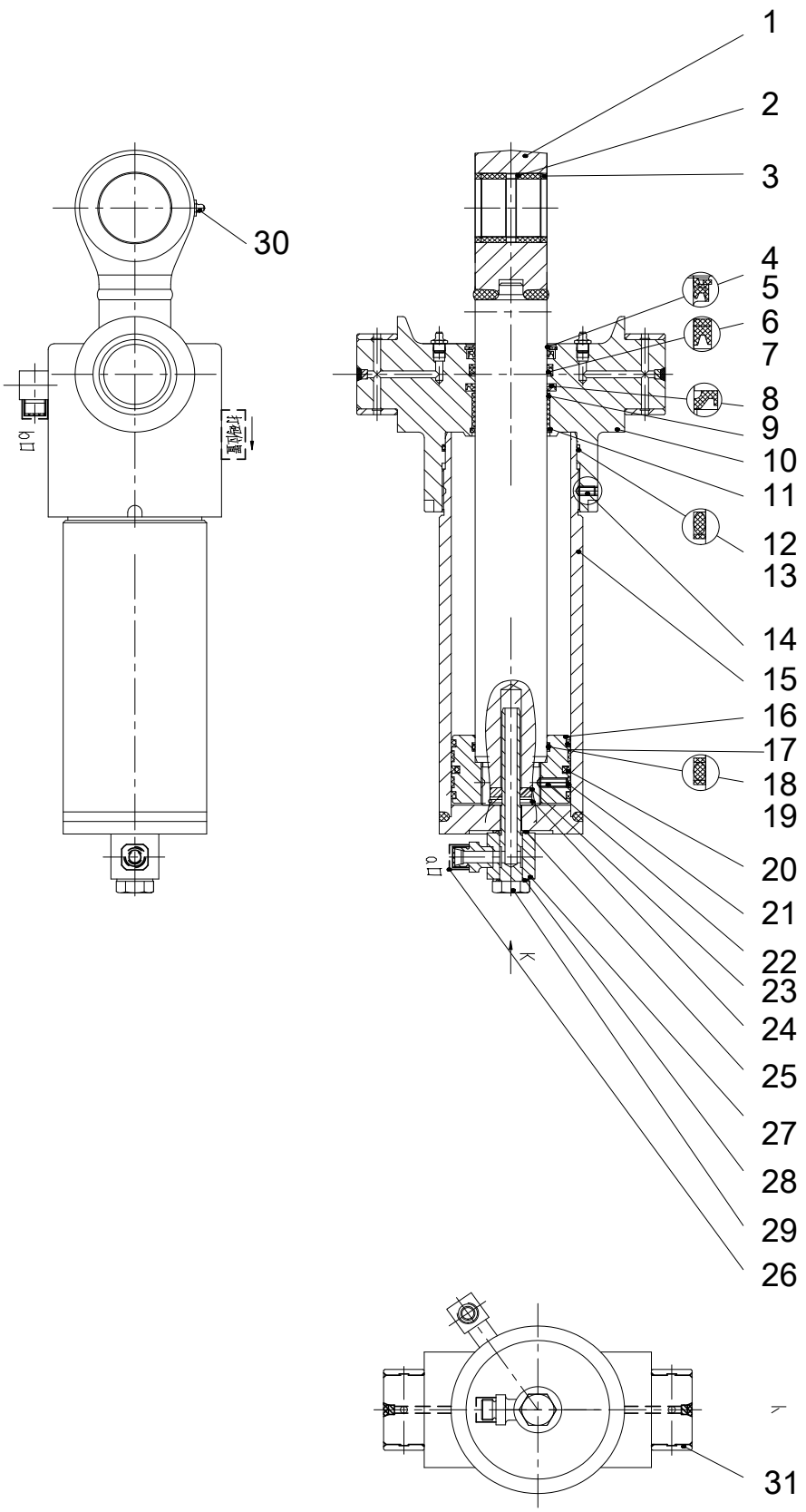

804000338 RIGHT SLEWING CYLINDER

402208122 ROTARY HYDRAULIC SYSTEM

No.	PART NUMBER	QTY	NAME	NOTE	PAGE
1	**914901435**	1	PISTON POLE		
2	**910302011**	1	BEARING		
3	**803195128**	2	DUSTPROOF WASHER 50×60×5		
5	**803195208**	1	DUSTPROOF WASHER 60×74×8×11		
6	**910302040**	1	SEPARATE BUSH5		
6	**803195210**	1	SEPARATE BUSH 60×70×3		
7	**803195218**	1	SHAFT SEAL 60×70×6		
8	**803195212**	1	CUSHION RING		
9	**915302903**	1	SLIDING BEARING		
10	**860559298**	1	GUIDE SLEEVE ASSY		
11	**805403098**	1	SEPARATE BUSH 65	GB/T895.1-1986	
12	**803195163**	1	O-RING		
13	**803195266**	1	SEPARATE BUSH 110×115×1.25		
14	**805104502**	1	SCREW M8×16		
15	**914901441**	1	CYLINDER		
16	**914901444**	1	PISTON		
17	**803195109**	2	ANTI-FOULING RING		
18	**803195168**	1	O-RING		
19	**803195167**	2	SEPARATE BUSH 60×65×1.25		
20	**803195319**	1	SEAL RING		
21	**803195110**	2	SUPPORT RING 100×95×9.5		
22	**805104508**	1	SCREW M8×25		
23	**914901445**	1	CUSHION RING2		
25	**805300044**	1	WASHER 18	JB/T982-1977	
26	**803413342**	1	INTERNAL THREAD PLUG M18×1.5		
26	**805407595**	2	SEPARATE BUSH 35	GB/T895.1-1986	
27	**914901446**	1	COMPRESSION SEAT		
28	**805300054**	1	WASHER 20	JB/T982-1977	

804000338 RIGHT SLEWING CYLINDER

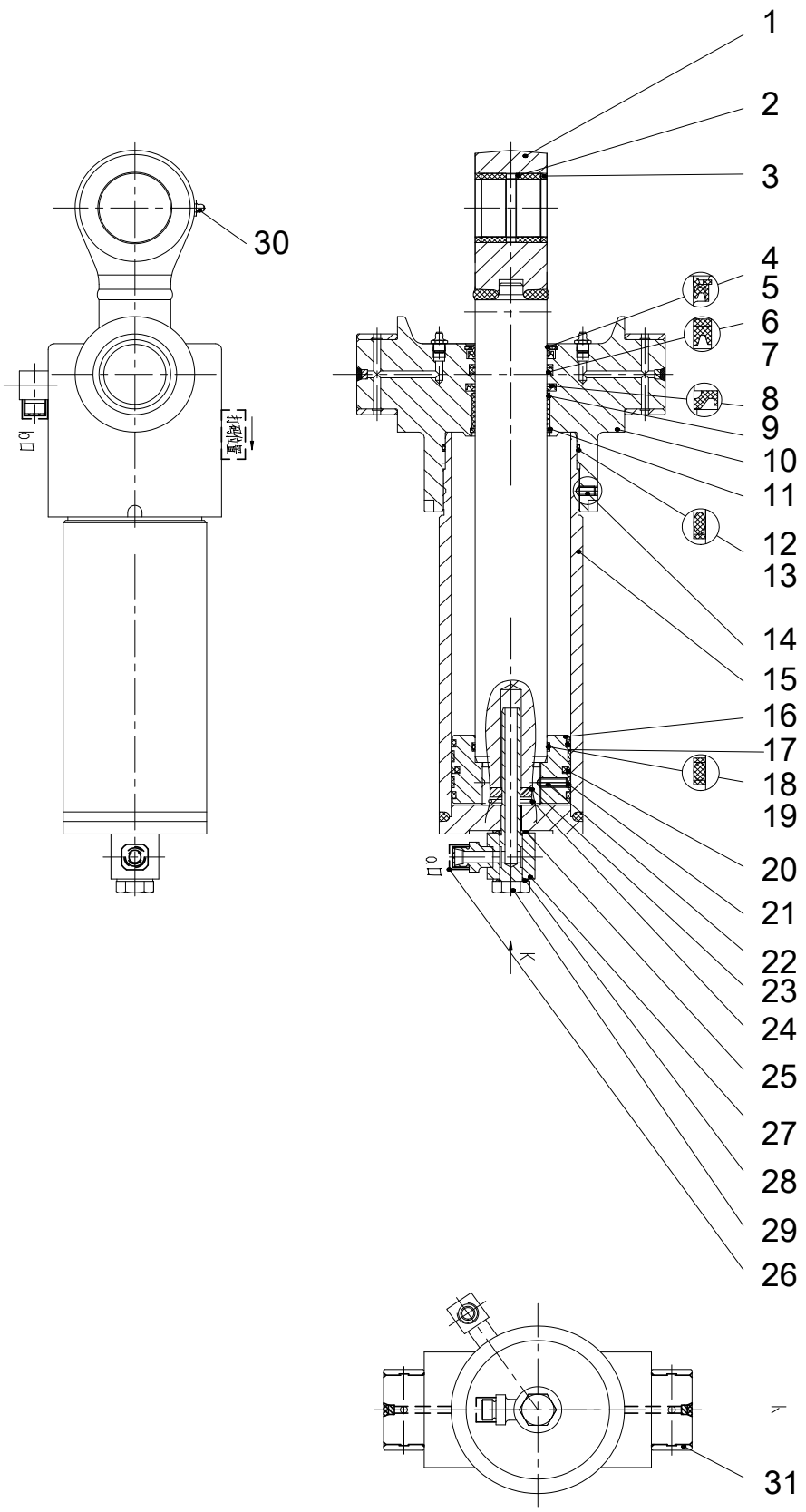

804000338 RIGHT SLEWING CYLINDER

402208122 ROTARY HYDRAULIC SYSTEM

No.	PART NUMBER	QTY	NAME	NOTE	PAGE
29	**914901449**	1	BOLT		
30	**801100336**	3	OIL CUP M10×1	JB/T7940.1-1995	
31	**860559299**	1	SHAFT SLEEVE SEAT		
32	**914901420**	1	XT870L.3.1.3.1A SEALING PACKAGE	INCLUDING THE N-O.5,6,7,8,9,11,12,13,1-7,18,19,20,21	

804000337 LEFT SLEWING CYLINDER

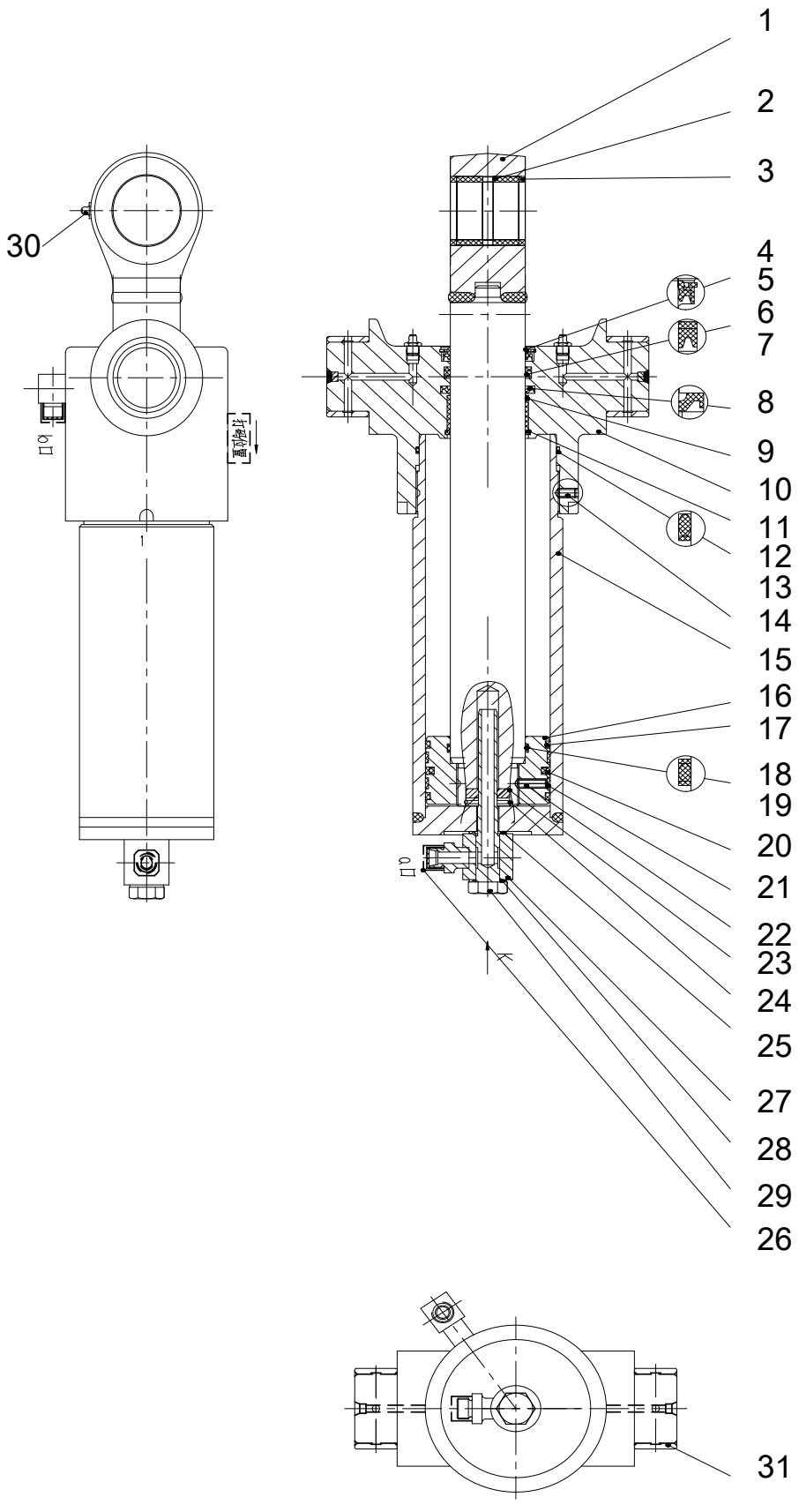

804000337 LEFT SLEWING CYLINDER

402208122 ROTARY HYDRAULIC SYSTEM

No.	PART NUMBER	QTY	NAME	NOTE	PAGE
1	**914901435**	1	PISTON POLE		
2	**910302011**	1	BEARING		
3	**803195128**	2	DUSTPROOF WASHER 50×60×5		
4	**910302040**	1	SEPARATE BUSH5		
5	**803195208**	1	DUSTPROOF WASHER 60×74×8×11		
6	**803195210**	1	SEPARATE BUSH 60×70×3		
7	**803195218**	1	SHAFT SEAL 60×70×6		
8	**803195212**	1	CUSHION RING		
9	**915302903**	1	SLIDING BEARING		
10	**860559298**	1	GUIDE SLEEVE ASSY		
11	**805403098**	1	SEPARATE BUSH 65	GB/T895.1-1986	
12	**803195163**	1	O-RING		
13	**803195266**	1	SEPARATE BUSH 110×115×1.25		
14	**805104502**	1	SCREW M8×16		
15	**914901441**	1	CYLINDER		
16	**914901444**	1	PISTON		
17	**803195109**	2	ANTI-FOULING RING		
18	**803195168**	1	O-RING		
19	**803195167**	2	SEPARATE BUSH 60×65×1.25		
20	**803195319**	1	SEAL RING		
21	**803195110**	2	SUPPORT RING 100×95×9.5		
22	**805104508**	1	SCREW M8×25		
23	**914901445**	1	CUSHION RING2		
24	**805407595**	1	SEPARATE BUSH 35	GB/T895.1-1986	
25	**805300044**	1	WASHER 18	JB/T982-1977	
26	**803413342**	2	INTERNAL THREAD PLUG M18×1.5		
27	**914901446**	1	COMPRESSION SEAT		
28	**805300054**	1	WASHER 20	JB/T982-1977	

804000337 LEFT SLEWING CYLINDER

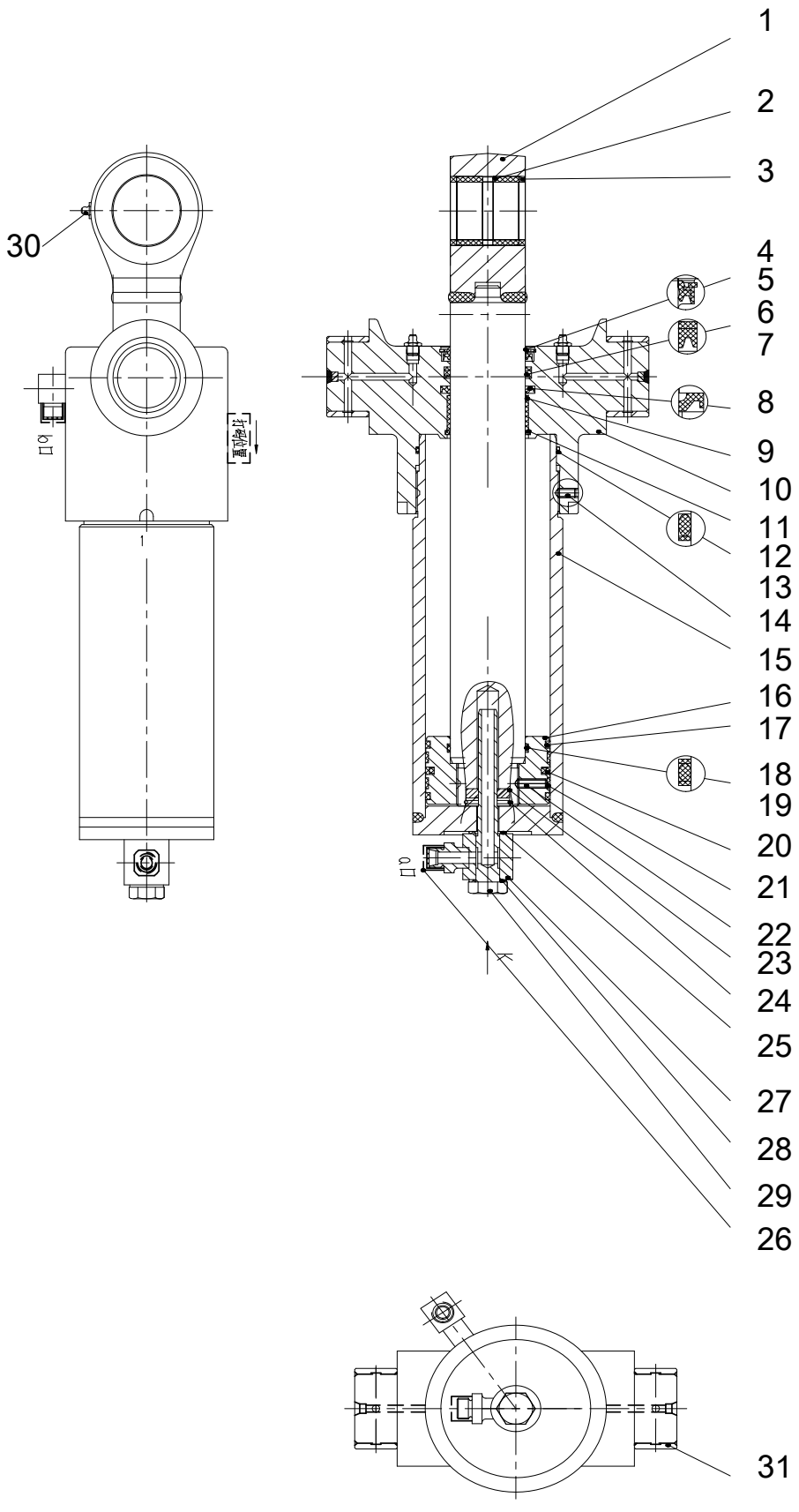

804000337 LEFT SLEWING CYLINDER

402208122 ROTARY HYDRAULIC SYSTEM

No.	PART NUMBER	QTY	NAME	NOTE	PAGE
29	**914901449**	1	BOLT		
30	**801100336**	3	OIL CUP M10×1	JB/T7940.1-1995	
31	**860559299**	1	SHAFT SLEEVE SEAT		
32	**914901420**	1	XT870L.3.1.3.1A SEALING PACKAGE	INCLUDING THE N-O.5,6,7,8,9,11,12,13,1-7,18,19,20,21	

402216284 OPERATIONAL PUMP HYDRAULIC SYSTEM

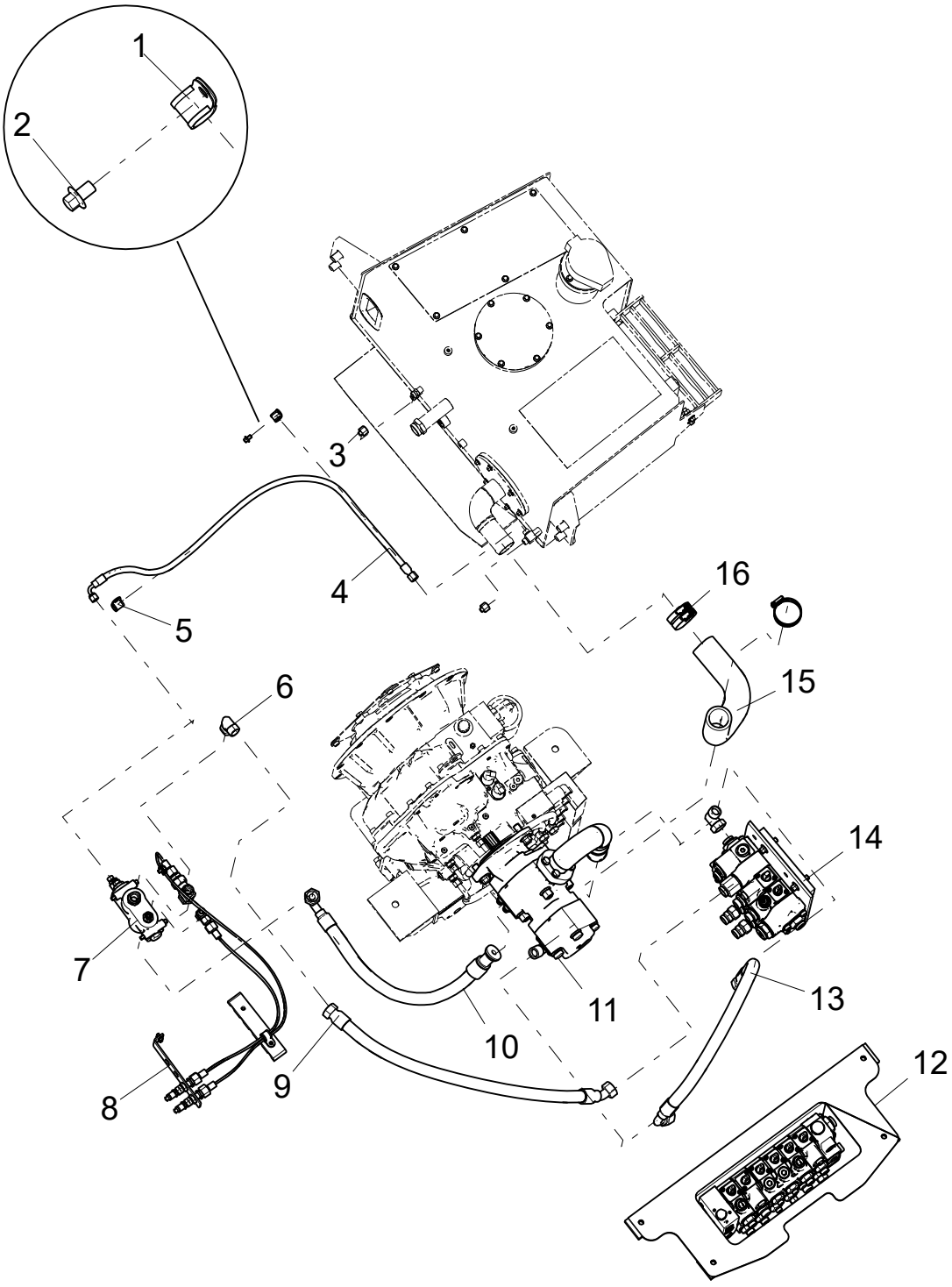

402216284 OPERATIONAL PUMP HYDRAULIC SYSTEM

402216287 WORKING HYDRAULIC SYSTEM

No.	PART NUMBER	QTY	NAME	NOTE	PAGE
1	**803199326**	1	CUTTING SLEEVE Φ18	TJBC	
2	**805047997**	1	BOLT M8×12(DACROMET)	GB/T16674.1-2004	
3	**803105809**	2	END CAP		
4	**803386461**	1	HOSE ASSEMBLY		
5	**803300797**	1	FERRULE Φ18-11	TJBC	
6	**803173684**	2	SPLICE		
7	**402208158**	1	PRIORITY VALVE ASSY		
8	**402216282**	1	PRESSURE MEASUREMENT PIPELINE		
9	**804431115**	1	HOSE ASSEMBLY		
10	**804471398**	1	HOSE ASSEMBLY		
11	**402212107**	1	PUMP ASSY		
12	**402208091**	1	EXCAVATING VALVE ASSY		
13	**804435575**	1	HOSE ASSEMBLY		
14	**402208090**	1	LOADING VALVE ASSY		
15	**402216292**	1	PUMP OIL SUCTION HOSE		
16	**801902715**	4	HOOP B52-76	QC/T619-1999	

402208158 PRIORITY VALVE ASSY

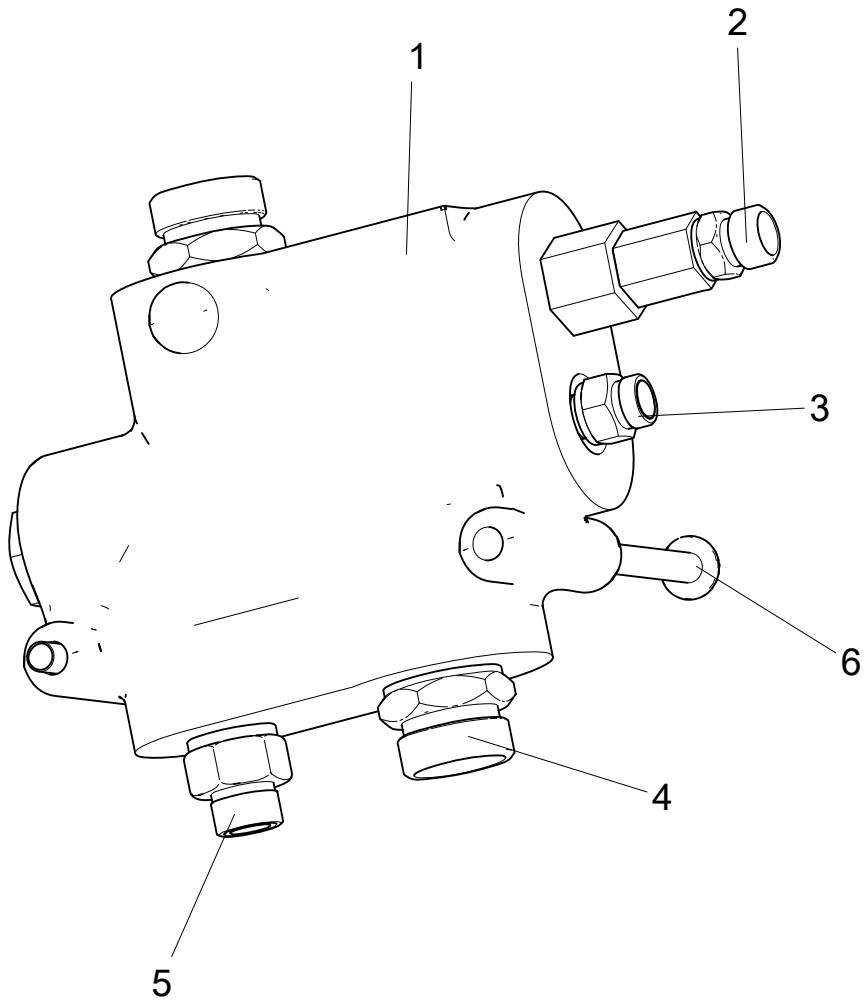

402208158 PRIORITY VALVE ASSY

402216284 OPERATIONAL PUMP HYDRAULIC SYSTEM

No.	PART NUMBER	QTY	NAME	NOTE	PAGE
1	**804009756**	1	VALVE		
2	**803378733**	1	SPLICE		
3	**800302269**	1	SPLICE		
4	**803378741**	2	SPLICE		
5	**803171345**	1	SPLICE		
6	**805048004**	2	BOLT M8×75	GB/T16674.1-2004	

402216282 PRESSURE MEASUREMENT PIPELINE

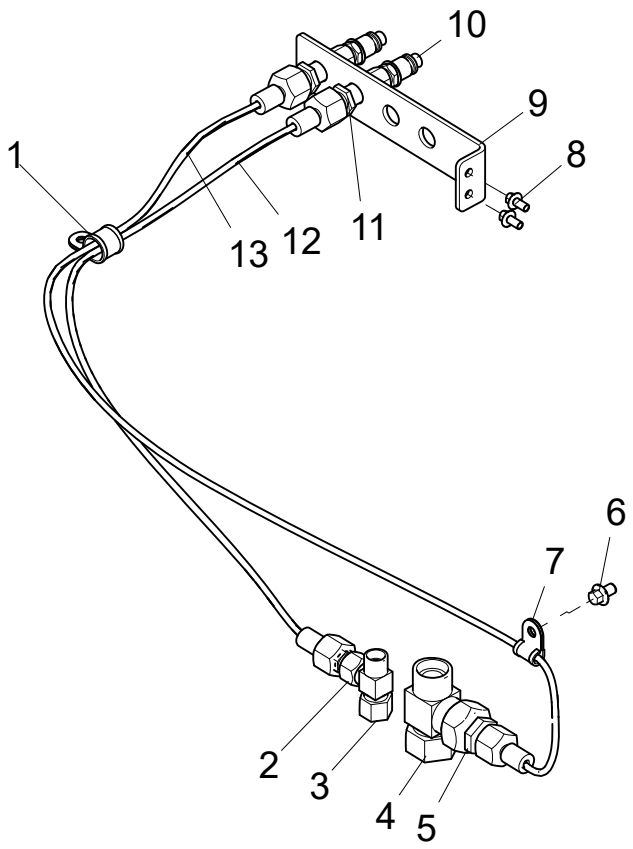

402216282 PRESSURE MEASUREMENT PIPELINE

402216284 OPERATIONAL PUMP HYDRAULIC SYSTEM

No.	PART NUMBER	QTY	NAME	NOTE	PAGE
1	**803199327**	1	CUTTING SLEEVE Φ20	TJBC	
2	**803174500**	1	SPLICE		
3	**803105415**	1	SPLICE		
4	**803106345**	1	SPLICE		
5	**803174505**	1	SPLICE		
6	**805047997**	1	BOLT M8×12(DACROMET)	GB/T16674.1-2004	
7	**803199323**	1	CUTTING SLEEVE Φ10	TJBC	
8	**805004834**	2	BOLT M6×12(DACROMET)	GB/T16674.1-2004	
9	**402215034**	1	PRESSURE MEASUREMENT PLATE		
10	**803103815**	2	SPLICE		
11	**803380805**	2	SPLICE		
12	**252110315**	1	PRESSUREMEASURE HOSE		
13	**252110317**	1	TEST LINE		

402212107 PUMP ASSY

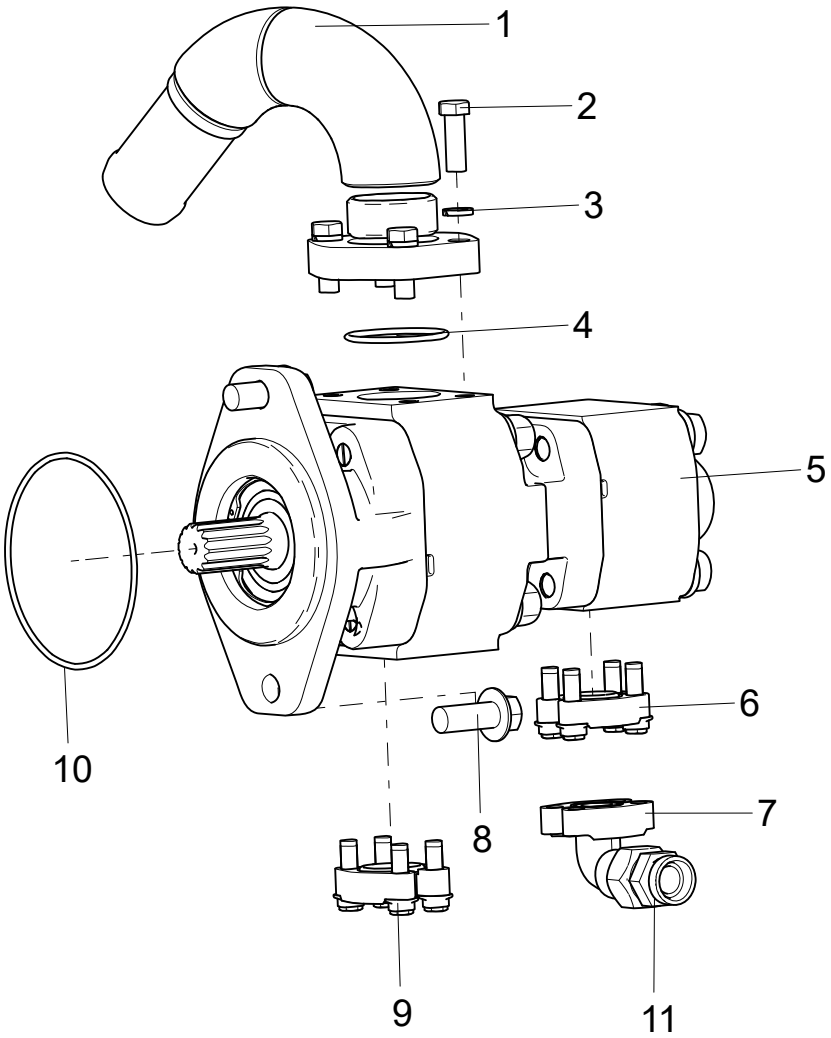

402212107 PUMP ASSY

402216284 OPERATIONAL PUMP HYDRAULIC SYSTEM

No.	PART NUMBER	QTY	NAME	NOTE	PAGE
1	**402215952**	1	DOUBLE PUMP OIL SUCTION CONNECTOR		
2	**805000048**	4	BOLT M12×35	GB/T5783-2000	
3	**805338261**	4	WASHER 12	GB/T93-1987	
4	**803401136**	1	ORING56.74×3.53	228N552-90	
5	**803086792**	1	DUALL PLUNGER PUMP		
6	**252911072**	1	FLANGE		
7	**803168883**	1	FLANGE		
8	**805048034**	2	BOLT M16×40	GB/T16674.1-2004	
9	**252911069**	1	FLANGE		
10	**803401158**	1	ORING126.59×3.53	250N552-90	
11	**803402036**	1	SPLICE		

252911072 FLANGE

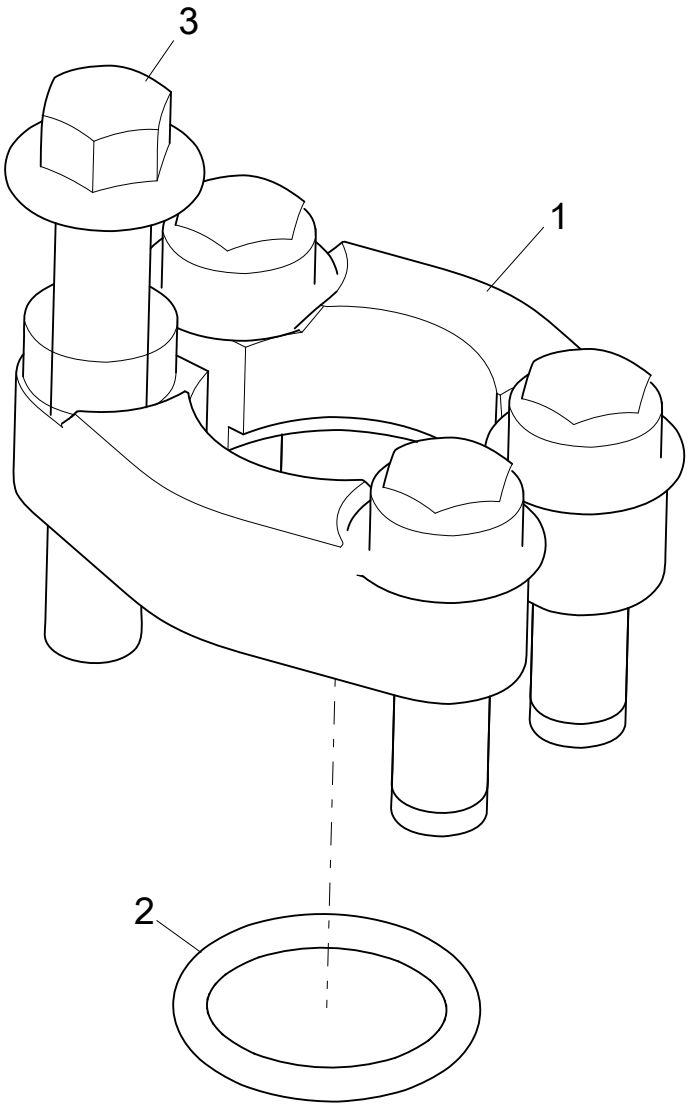

252911072 FLANGE

402212107 PUMP ASSY

No.	PART NUMBER	QTY	NAME	NOTE	PAGE
1	**803164827**	1	FLANGE		
2	**803401122**	1	ORING24.99×3.53		
3	**805048006**	4	BOLT M10×30	GB/T16674.1-2004	

252911069 FLANGE

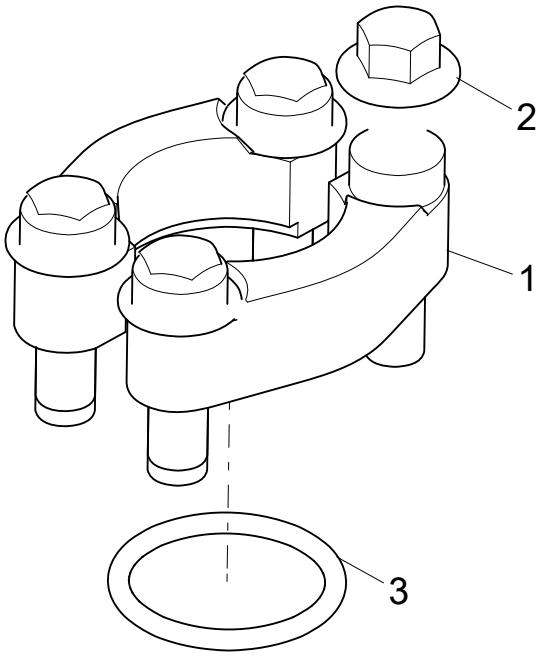

252911069 FLANGE

402212107 PUMP ASSY

No.	PART NUMBER	QTY	NAME	NOTE	PAGE
1	**803164234**	1	FLANGE		
2	**805048006**	4	BOLT M10×30	GB/T16674.1-2004	
3	**803401127**	1	ORING32.92×3.53	219N552-90	

402208091 EXCAVATING VALVE ASSY

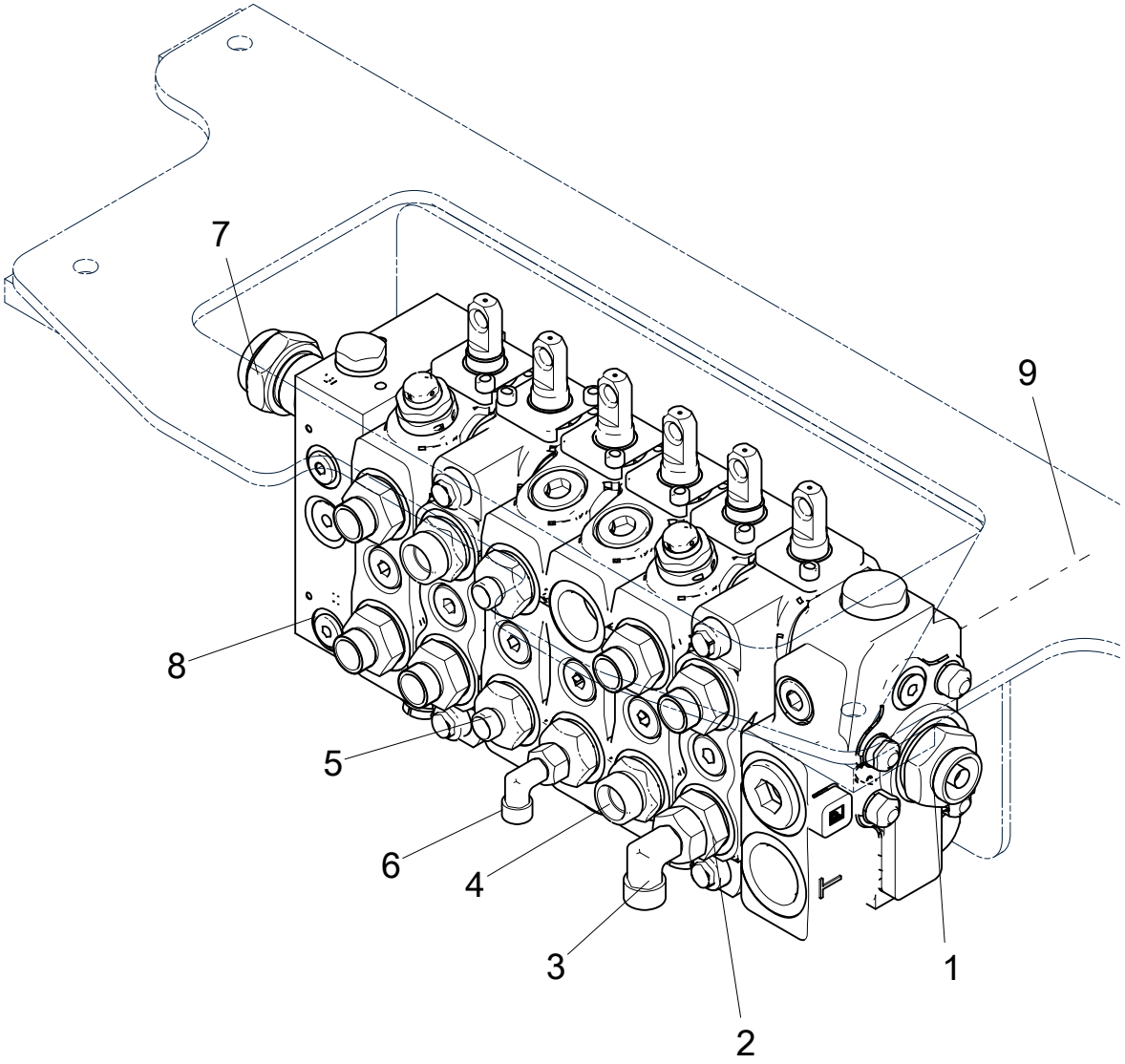

402208091 EXCAVATING VALVE ASSY

402216284 OPERATIONAL PUMP HYDRAULIC SYSTEM

No.	PART NUMBER	QTY	NAME	NOTE	PAGE
1	**803106596**	1	SPLICE		
2	**803164733**	6	SPLICE		
3	**803103775**	1	SPLICE		
4	**803165768**	2	SPLICE		
5	**803378734**	4	SPLICE		
6	**803103351**	1	SPLICE		
7	**803103774**	1	SPLICE		
8	**803099810**	1	BLOCK VALVE		
9	**805004763**	4	BOLT M10×25(DACROMET)	GB/T16674.1-2004	

402208090 LOADING VALVE ASSY

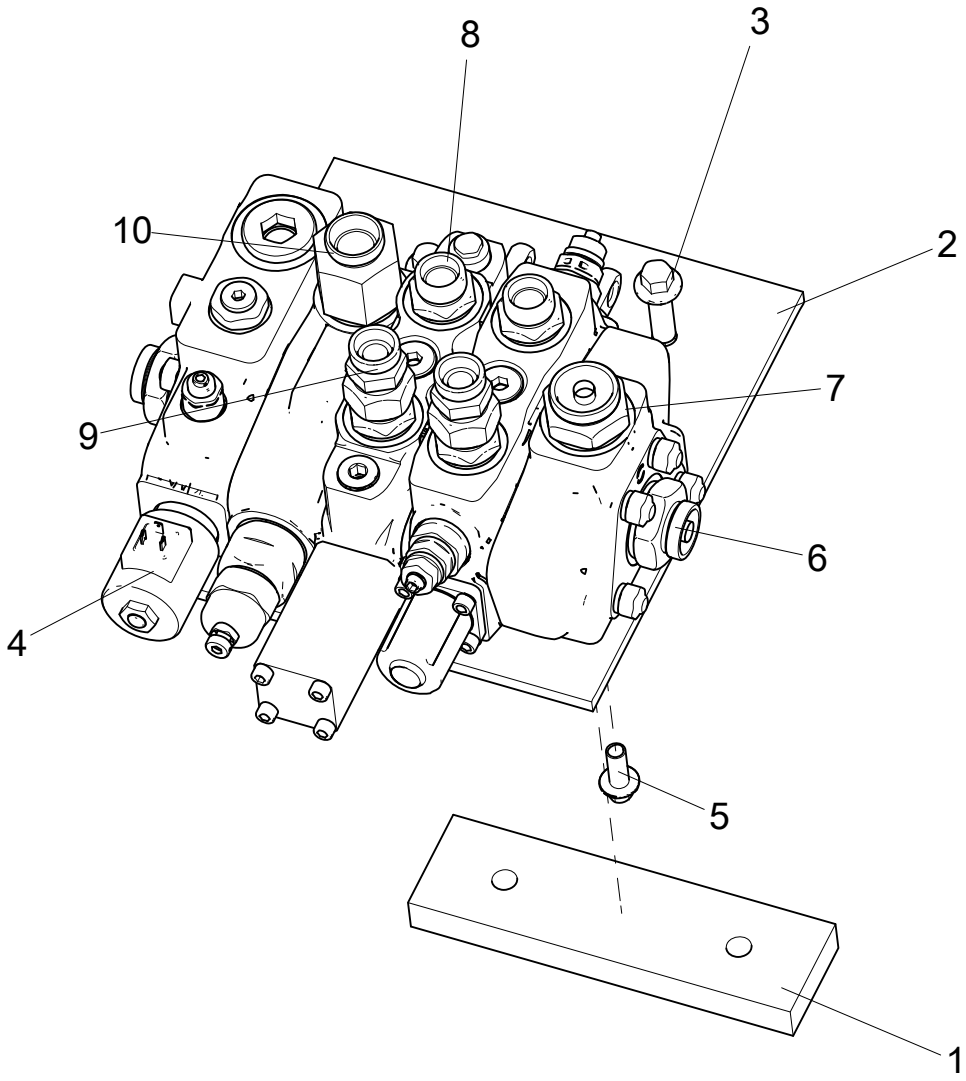

402208090 LOADING VALVE ASSY

402216284 OPERATIONAL PUMP HYDRAULIC SYSTEM

No.	PART NUMBER	QTY	NAME	NOTE	PAGE
1	**402201307**	1	CHECKING SHEET		
2	**402208089**	1	LOADING VALVE FIXING PLATE		
3	**805048018**	2	BOLT M12×40	GB/T16674.1-2004	
4	**803099809**	1	BLOCK VALVE		
5	**805004763**	4	BOLT M10×25(DACROMET)	GB/T16674.1-2004	
6	**803106596**	2	SPLICE		
7	**803103774**	1	SPLICE		
8	**803165768**	4	SPLICE		
9	**803406995**	2	SPLICE		
10	**803414785**	1	SPLICE		

803099809 BLOCK VALVE

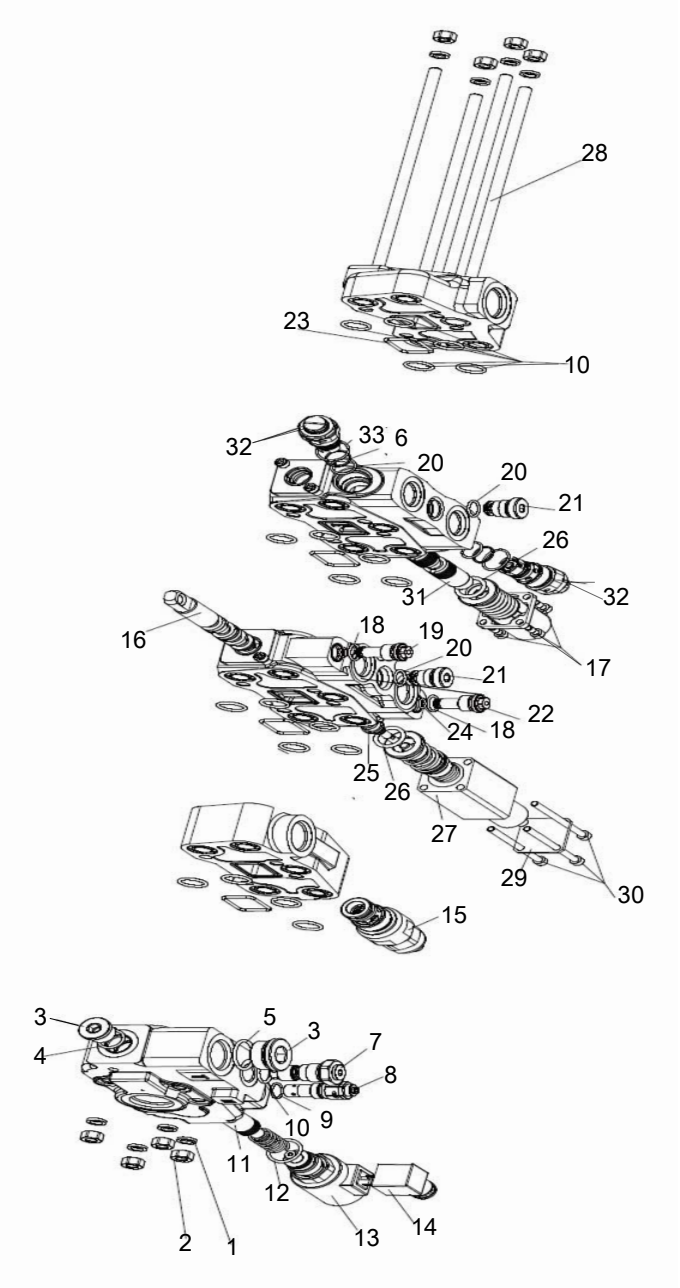

803099809 BLOCK VALVE

402208090 LOADING VALVE ASSY

No.	PART NUMBER	QTY	NAME	NOTE	PAGE
1	**800148126**	1	STANDARD SPRING WASHER		
2	**805047525**	1	NUT		
3	**860608769**	2	PLUG		
4	**860609069**	1	O-RING		
5	**860609070**	1	O-RING		
6	**860608786**	2	RETAINING RING		
7	**860608770**	1	CHECK VALVE		
8	**860608771**	8	RELIEF VALVE		
9	**860609071**	8	O-RING		
10	**860609067**	21	O-RING		
11	**860608772**	1	VALVE ROD		
12	**860609072**	1	O-RING		
13	**860608773**	1	SOLENOID VALVE		
14	**860603608**	1	ELECTRICAL PLUG		
15	**860608774**	1	RELIEF VALVE		
16	**860608775**	1	VALVE SPOOL		
17	**860515318**	4	INNER-HEXAGON SCREW		
18	**860609065**	2	O-RING		
19	**860608776**	2	OIL FILL RELIEF VALVE	SET PRESSURE 32MPA	
20	**860609063**	2	O-RING		
21	**860608777**	2	CHECK VALVE		
22	**860608778**	1	PLUG		
23	**860609068**	4	O-RING		
24	**860609074**	1	O-RING		
25	**860608780**	1	LIMIT ROD		
26	**860609066**	4	O-RING		
27	**860608781**	1	BACK MANTLE		
28	**860608782**	4	SCREW		

803099809 BLOCK VALVE

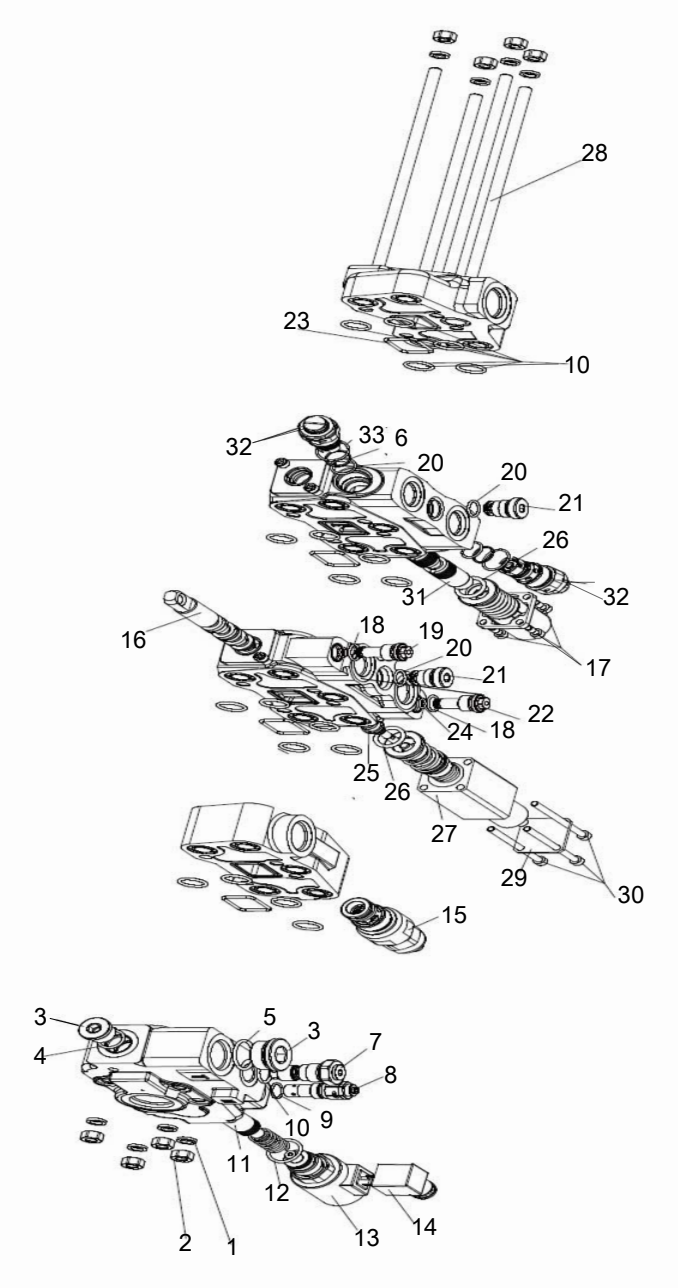

803099809 BLOCK VALVE

402208090 LOADING VALVE ASSY

No.	PART NUMBER	QTY	NAME	NOTE	PAGE
29	**860608783**	1	BAFFLE		
30	**805141110**	4	HEXAGON SOCKET SCREW		
31	**860608784**	1	VALVE SPOOL		
32	**860608785**	2	OIL FILL RELIEF VALVE	SET PRESSURE 19MPA	
33	**860609064**	2	O-RING		

402216605 HYDRAULIC OIL TANK ASSEMBLY

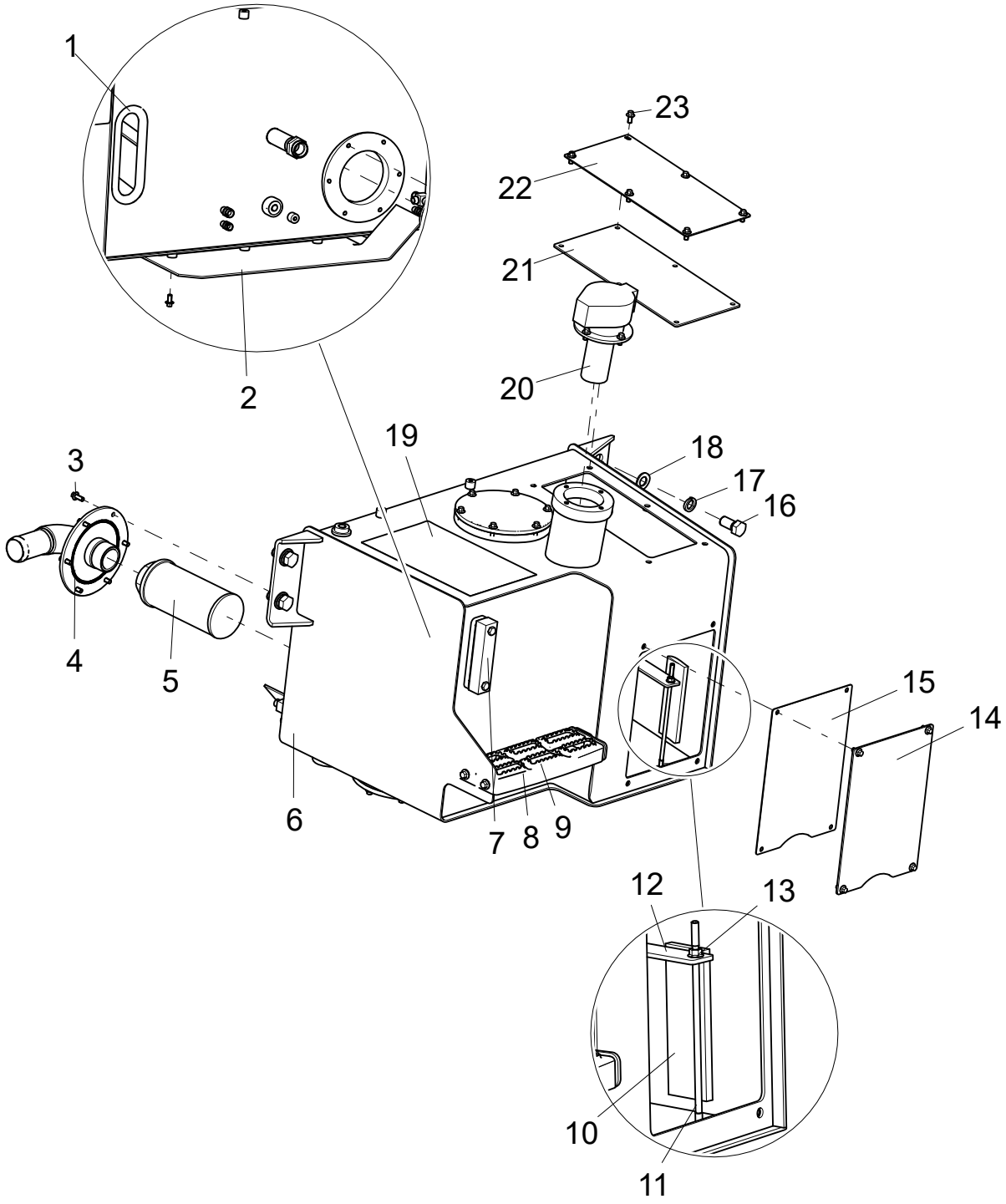

402216605 HYDRAULIC OIL TANK ASSEMBLY

402216287 WORKING HYDRAULIC SYSTEM

No.	PART NUMBER	QTY	NAME	NOTE	PAGE
1	**801968857**	1	35 TRIM BAR		
2	**402207279**	1	SEPARATE SHEET		
3	**805004756**	6	BOLT M8×20 (DACROMET)	GB/T16674.1-2004	
4	**402216288**	1	OIL SUCTION CONNECTOR		
5	**803403761**	1	SUCTION OIL FILTER		
6	**402216757**	1	HYDRAULIC OIL TANK		
7	**803370253**	1	LIQUID LEVEL METER		
8	**402216583**	1	BOARD		
9	**819941830**	1	MAGNET		
10	**402200321**	10	CUSHION		
11	**805051890**	2	SCREW M8×250	GB/T901-1988	
12	**402216608**	1	RETAINER FLEX-PLATE		
13	**805238400**	2	NUT M8	GB/T6177.1-2000	
14	**402216604**	1	COVER		
15	**402216622**	1	CUSHION		
16	**805046588**	4	BOLT M20×40	GB/T5783-2000	
17	**805300023**	4	WASHER 20	GB/T93-1987	
18	**805300112**	4	WASHER 20	GB/T97.1-2002	
19	**402208080**	1	ANTI-SLIP TAPE		
20	**803164230**	1	OIL FILLER FILTER		
21	**402215584**	1	CUSHION		
22	**402215583**	1	COVER		
23	**805004755**	17	BOLT M8×16 (DACROMET)	GB/T16674.1-2004	

402216757 HYDRAULIC OIL TANK

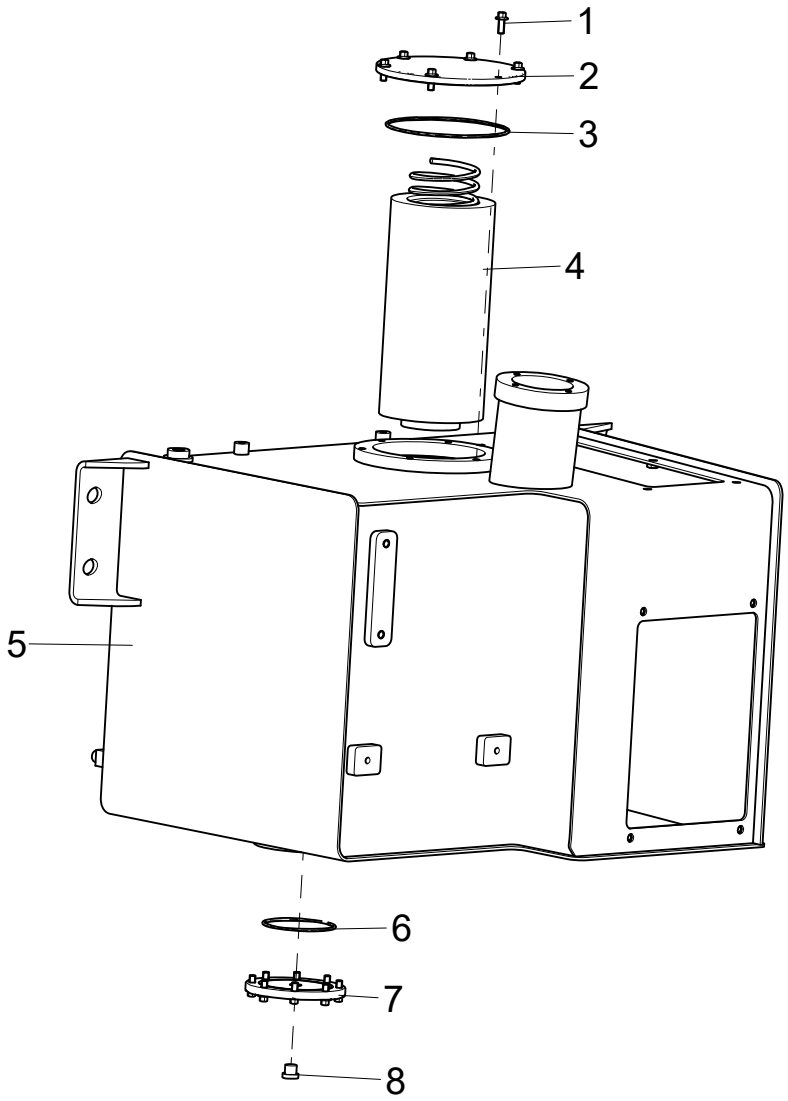

402216757 HYDRAULIC OIL TANK

402216605 HYDRAULIC OIL TANK ASSEMBLY

No.	PART NUMBER	QTY	NAME	NOTE	PAGE
1	**805004756**	22	BOLT M8×20 (DACROMET)	GB/T16674.1-2004	
2	**402207277**	1	COVER		
3	**803401168**	3	ORING164.69×3.53	260N552-90	
4	**803099349**	1	RETURN OIL FILTER		
5	**402216758**	1	FUEL TANK BODY		
6	**803401148**	1	ORING94.84×3.53	240N552-90	
7	**251808558**	2	COVER		
8	**803166450**	1	END CAP		

402216583 BOARD

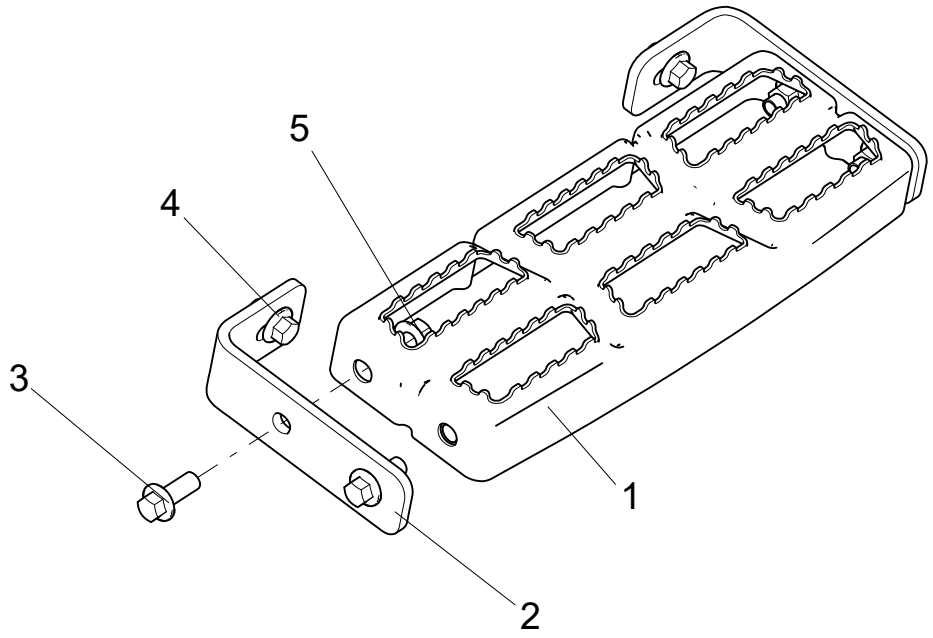

402216583 BOARD

402216605 HYDRAULIC OIL TANK ASSEMBLY

No.	PART NUMBER	QTY	NAME	NOTE	PAGE
1	**252614435**	1	PEDAL		
2	**402216596**	2	FOOTSTEP SUPPORT		
3	**805004763**	4	BOLT M10×25(DACROMET)	GB/T16674.1-2004	
4	**805048005**	2	BOLT M10×16(DACROMET)	GB/T16674.1-2004	
5	**805238533**	4	NUT 10	GB/T6177.1-2000	

402216295 RADIATOR PIPELINE SYSTEM

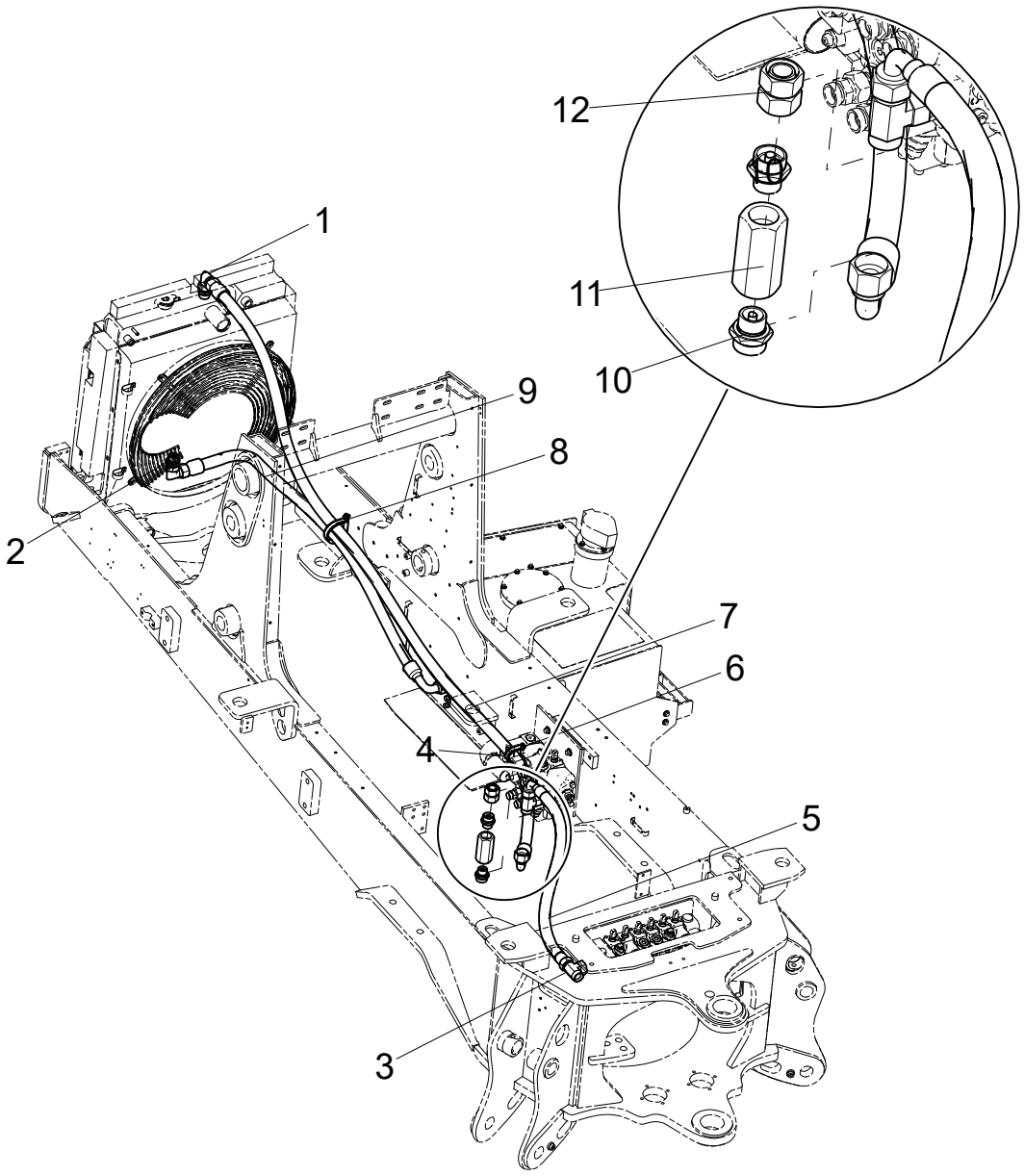

402216295 RADIATOR PIPELINE SYSTEM

402216287 WORKING HYDRAULIC SYSTEM

No.	PART NUMBER	QTY	NAME	NOTE	PAGE
1	**803103798**	2	SPLICE		
2	**803100723**	2	SPLICE		
3	**803176937**	2	SPLICE		
4	**803300795**	1	CUTTING SLEEVE Φ45	TJBC	
5	**803306576**	1	HOSE ASSEMBLY		
6	**805047997**	2	BOLT M8×12(DACROMET)	GB/T16674.1-2004	
7	**803274970**	1	HOSE ASSEMBLY		
8	**803300796**	1	FERRULE Φ76	TJBC	
9	**803165411**	1	HOSE ASSEMBLY		
10	**803174492**	2	SPLICE		
11	**803097449**	1	CHECK VALVE		
12	**803109377**	1	SPLICE		

402208121 LOADING HYDRAULIC SYSTEM

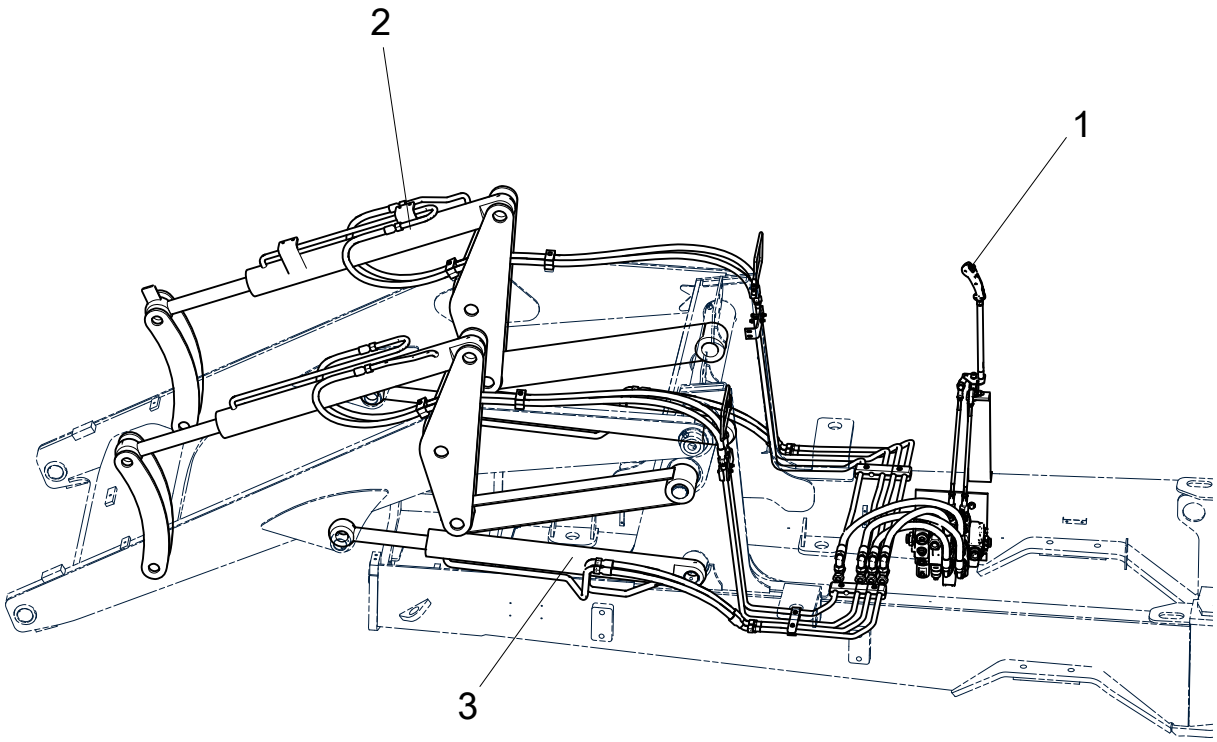

402208121 LOADING HYDRAULIC SYSTEM

402216287 WORKING HYDRAULIC SYSTEM

No.	PART NUMBER	QTY	NAME	NOTE	PAGE
1	**402208096**	1	LOADING OPERATION		
2	**402208120**	1	BUCKET CYLINDER HYDRAULIC SYSTEM		
3	**402208106**	1	LIFTING HYDRAULIC SYSTEM		

402208096 LOADING OPERATION

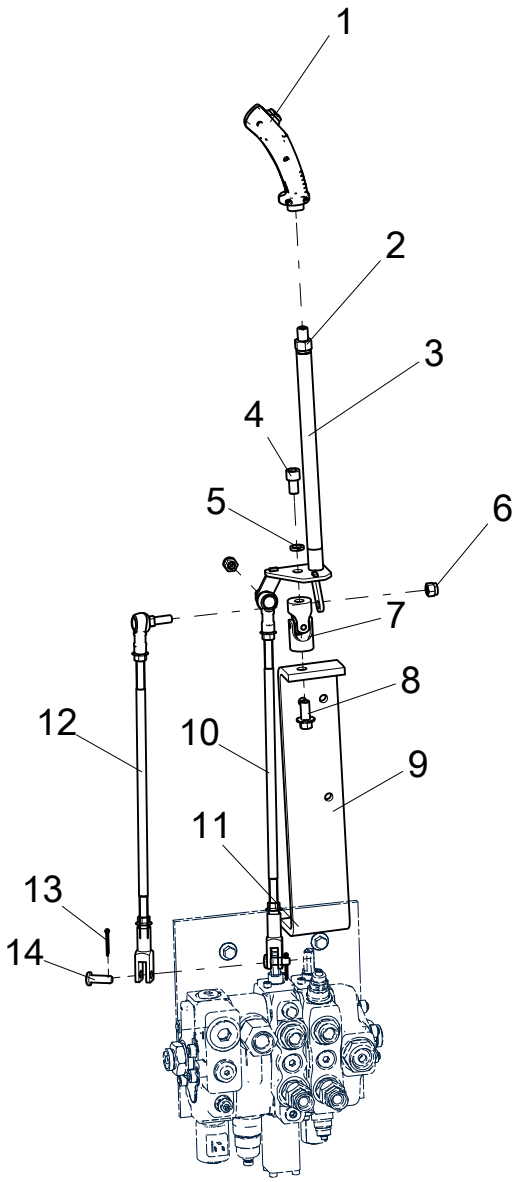

402208096 LOADING OPERATION

402208121 LOADING HYDRAULIC SYSTEM

No.	PART NUMBER	QTY	NAME	NOTE	PAGE
1	**801541412**	1	HAND SHANK		
2	**805200056**	1	NUT	GB/T6171-2000	
3	**402205147**	1	LOADING JOYSTICK		
4	**805140584**	1	SCREW M12×20	GB/T70.1-2008	
5	**805338261**	1	WASHER 12	GB/T93-1987	
6	**805201515**	2	NUT M10	GB/T6182-2010	
7	**402204025**	1	CANDAN UNIVERSAL JOINT		
8	**805004764**	1	BOLT M12×25 (DACROMET)	GB/T16674.1-2004	
9	**402205589**	1	MOUNTING PLATE		
10	**402208095**	1	COUPLING		
11	**805004763**	2	BOLT M10×25(DACROMET)	GB/T16674.1-2004	
12	**402208094**	1	COUPLING		
13	**805600316**	2	PIN 3.2×28	GB/T91-2000	
14	**805600068**	2	PIN 10×30	GB/T882-2008	

402208095 COUPLING

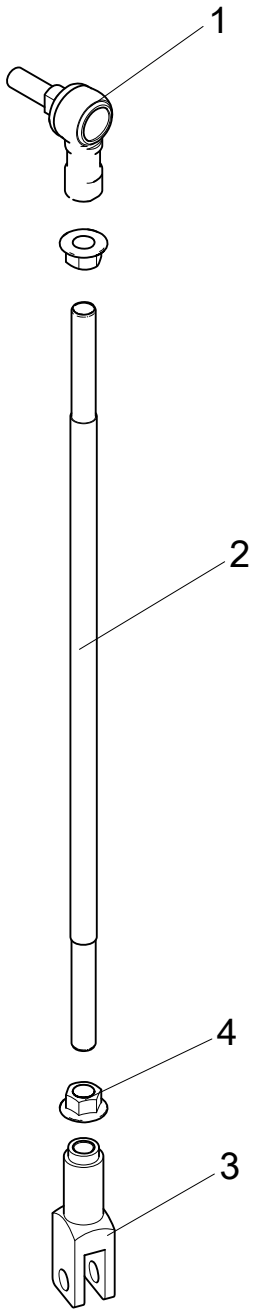

402208095 COUPLING

402208096 LOADING OPERATION

No.	PART NUMBER	QTY	NAME	NOTE	PAGE
1	**402204026**	1	BALL JOINT		
2	**402205563**	1	BAR		
3	**402200926**	1	FORK		
4	**805238533**	2	NUT 10	GB/T6177.1-2000	

402208094 COUPLING

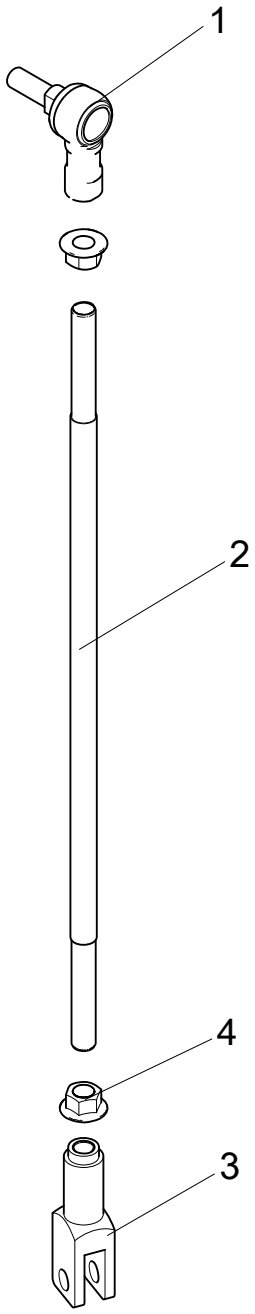

402208094 COUPLING

402208096 LOADING OPERATION

No.	PART NUMBER	QTY	NAME	NOTE	PAGE
1	**402204026**	1	BALL JOINT		
2	**402205563**	1	BAR		
3	**402200926**	1	FORK		
4	**805238533**	2	NUT 10	GB/T6177.1-2000	

402208120 BUCKET CYLINDER HYDRAULIC SYSTEM

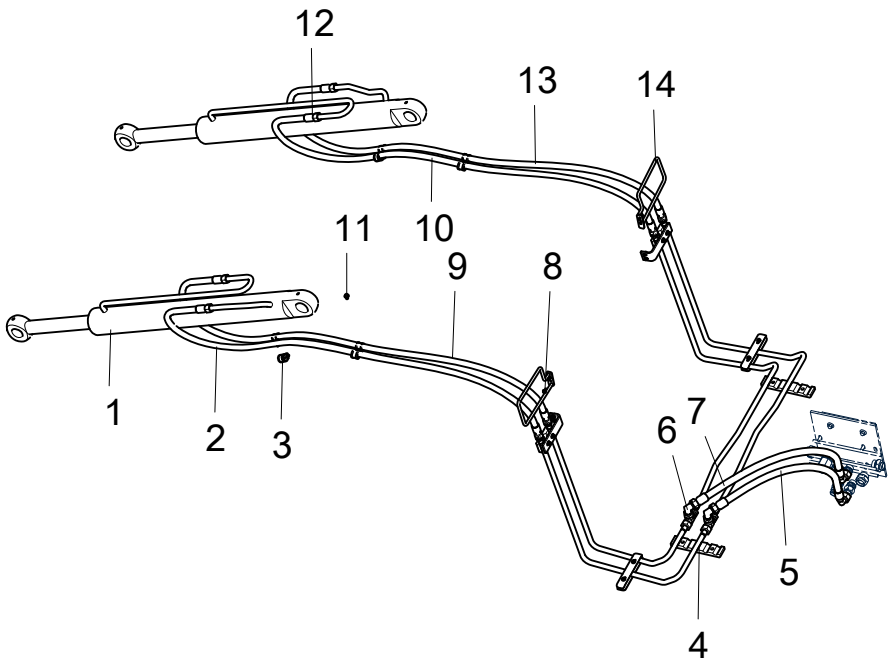

402208120 BUCKET CYLINDER HYDRAULIC SYSTEM

402208121 LOADING HYDRAULIC SYSTEM

No.	PART NUMBER	QTY	NAME	NOTE	PAGE
1	**804015883**	1	LEFT BUCKET CYLINDER		
2	**803173039**	1	HOSE ASSEMBLY		
3	**803199328**	8	FERRULE Φ24		
4	**402208116**	1	STEEL TUBE		
5	**803175430**	1	HOSE ASSEMBLY		
6	**803100741**	2	SPLICE		
7	**803175430**	1	HOSE ASSEMBLY		
8	**805004834**	4	BOLT M6×12(DACROMET)	GB/T16674.1-2004	
9	**803173039**	1	HOSE ASSEMBLY		
10	**803173039**	1	HOSE ASSEMBLY		
11	**805047997**	4	BOLT M8×12(DACROMET)	GB/T16674.1-2004	
12	**804030179**	1	RIGHT BUCKET CYLINDER		
13	**803173039**	1	HOSE ASSEMBLY		
14	**402211129**	2	SUPPORT FRAME		

804015883 LEFT BUCKET CYLINDER

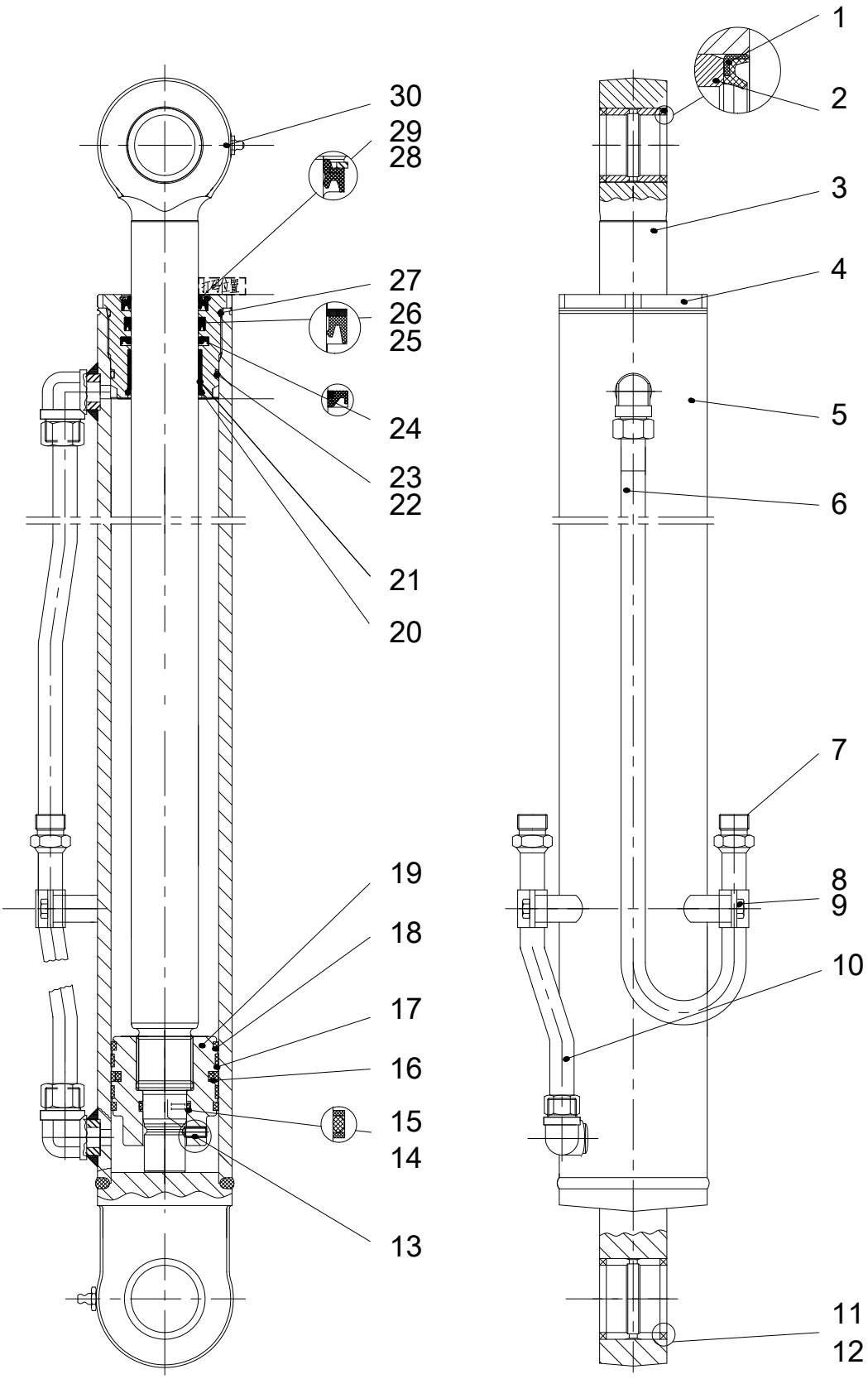

804015883 LEFT BUCKET CYLINDER

402208120 BUCKET CYLINDER HYDRAULIC SYSTEM

No.	PART NUMBER	QTY	NAME	NOTE	PAGE
1	**914901382**	1	BEARING		
2	**803305062**	2	DUSTPROOF WASHER 45×55×4		
3	**860559300**	1	PISTON POLE		
4	**914901450**	1	SLEEVE GUIDE		
5	**910604328**	1	CYLINDER		
6	**926127284**	1	OIL PIPE ASSYI		
7	**801974900**	2	PLUG		
8	**910303128**	2	PIPE CLAMP ASSY		
9	**805100151**	2	SCREW M10×16	GB/T70.1-2008	
10	**926127286**	1	OIL PIPE ASSYII		
11	**803195128**	2	DUSTPROOF WASHER 50×60×5		
12	**914901452**	1	BUSH		
13	**805104504**	1	SCREWM12×1.75×110	GB/T78-2007	
14	**803307184**	2	SEPARATE BUSH 32.5×38.2×1.5		
15	**803199862**	1	O-RING	GB/T3452.1-2005	
16	**803305367**	1	SEAL RING 65×80×7.3		
17	**803305368**	2	SUPPORT RING 80×75×9.5		
18	**803307185**	2	ANTI-POLLUTION RING 72×80×6		
19	**910302825**	1	PISTON		
20	**805403141**	1	SEPARATE BUSH 55	GB/T895.1-1986	
21	**910302670**	1	SLIDING BEARING 50×55×30		
22	**803305059**	1	SEPARATE BUSH 75.7×80.5×1.25		
23	**803195291**	1	ORING 74.4×3.1		
24	**803307186**	1	CUSHION RING		
25	**803305276**	1	SHAFT SEAL 50×60×6		
26	**803305277**	1	SEPARATE BUSH 50×60×3		
27	**803198800**	1	O-RING	GB/T3452.1-2005	
28	**910302676**	1	SEPARATE BUSH		

804015883 LEFT BUCKET CYLINDER

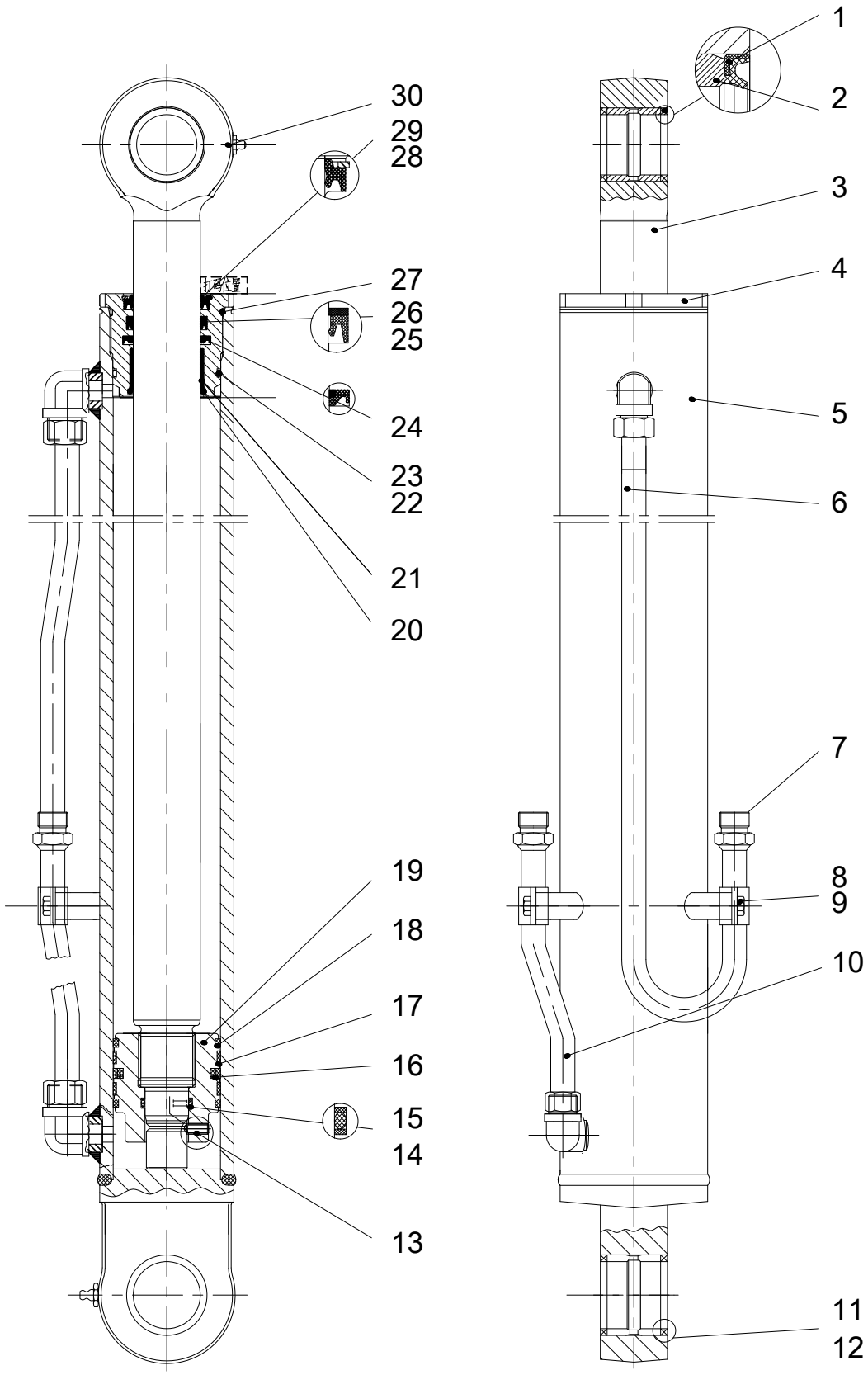

804015883 LEFT BUCKET CYLINDER

402208120 BUCKET CYLINDER HYDRAULIC SYSTEM

No.	PART NUMBER	QTY	NAME	NOTE	PAGE
29	**803305278**	1	DUSTPROOF WASHER 50×62×7×10		
30	**801100343**	2	OIL CUP M10×1	JB/T7940.1-1995	
	915305785	1	XT870L.3.4.2.2A SEALING PACKAGE	INCLUDING THE N-O.14,15,16,17,18,20,2-1,22,23,24,25,26,27,29	

402208116 STEEL TUBE

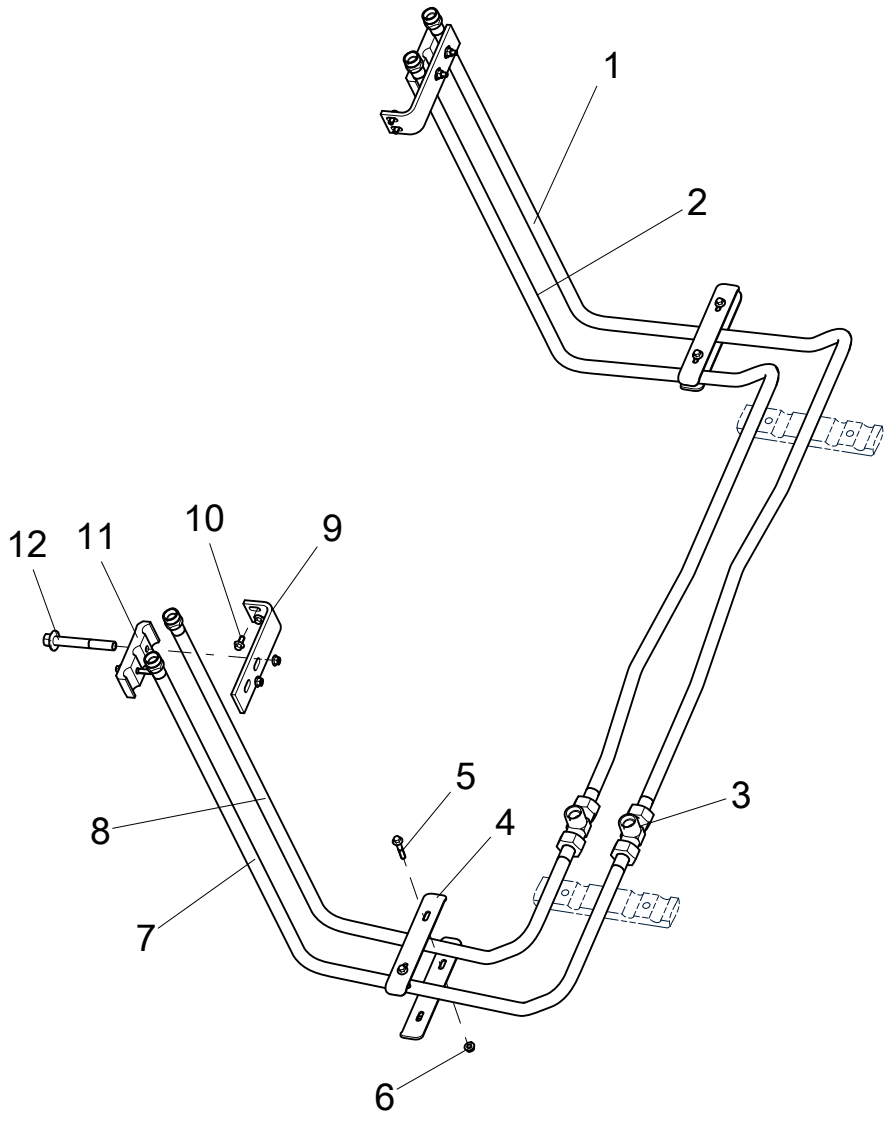

402208116 STEEL TUBE

402208120 BUCKET CYLINDER HYDRAULIC SYSTEM

No.	PART NUMBER	QTY	NAME	NOTE	PAGE
1	**402208114**	1	PIPE CLIP		
2	**402208112**	1	PIPE CLIP		
3	**803105184**	2	SPLICE		
4	**402205660**	4	PIPE CLIP		
5	**805047995**	4	BOLT M6×35	GB/T16674.1-2004	
6	**805135720**	8	NUT M6(DACROMET)	GB/T6177.1-2000	
7	**402208110**	1	PIPE CLIP		
8	**402208108**	1	PIPE CLIP		
9	**402208115**	2	PIPE CLAMP MOUNTING PLATE		
10	**805004834**	4	BOLT M6×12(DACROMET)	GB/T16674.1-2004	
11	**402205169**	2	PIPE CLIP		
12	**805048465**	4	BOLT	GB/T16674.1-2004	

804030179 RIGHT BUCKET CYLINDER

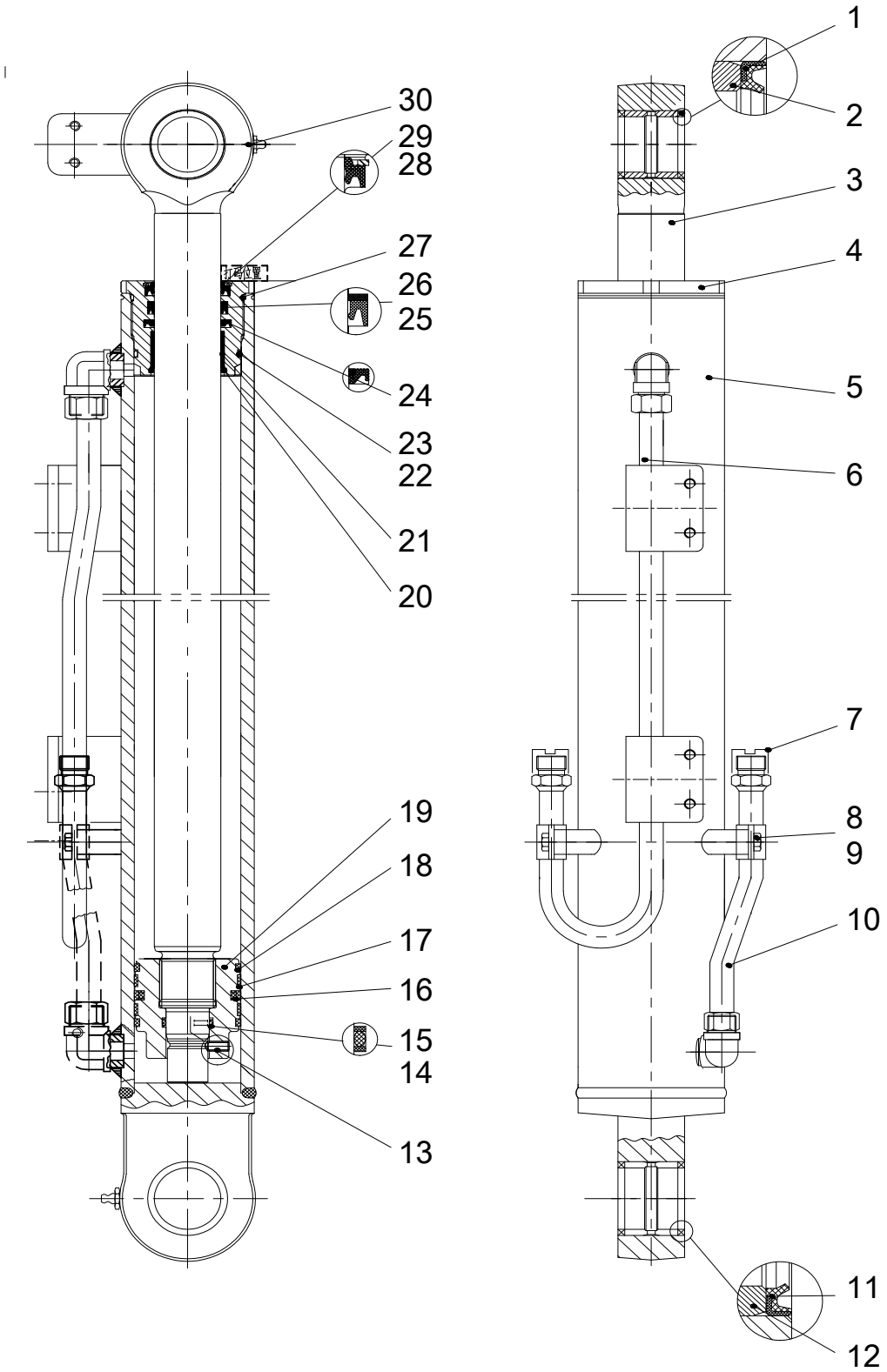

804030179 RIGHT BUCKET CYLINDER

402208120 BUCKET CYLINDER HYDRAULIC SYSTEM

No.	PART NUMBER	QTY	NAME	NOTE	PAGE
1	**914901382**	1	BEARING		
2	**803305062**	2	DUSTPROOF WASHER 45×55×4		
3	**860559300**	1	PISTON POLE		
4	**914901450**	1	SLEEVE GUIDE		
5	**910604328**	1	CYLINDER		
6	**926127284**	1	OIL PIPE ASSYI		
7	**801974900**	2	PLUG		
8	**910303128**	2	PIPE CLAMP ASSY		
9	**805100151**	1	SCREW M10×16	GB/T70.1-2008	
10	**926127286**	1	OIL PIPE ASSYII		
11	**803195128**	2	DUSTPROOF WASHER 50×60×5		
12	**914901452**	1	BUSH		
13	**805104504**	1	SCREWM12×1.75×110	GB/T78-2007	
14	**803307184**	2	SEPARATE BUSH 32.5×38.2×1.5		
15	**803199862**	1	O-RING	GB/T3452.1-2005	
16	**803305367**	1	SEAL RING 65×80×7.3		
17	**803305368**	2	SUPPORT RING 80×75×9.5		
18	**803307185**	2	ANTI-POLLUTION RING 72×80×6		
19	**910302825**	1	PISTON		
20	**805403141**	1	SEPARATE BUSH 55	GB/T895.1-1986	
21	**910302670**	1	SLIDING BEARING 50×55×30		
22	**803305059**	1	SEPARATE BUSH 75.7×80.5×1.25		
23	**803195291**	1	ORING 74.4×3.1		
24	**803307186**	1	CUSHION RING		
25	**803305276**	1	SHAFT SEAL 50×60×6		
26	**803305277**	1	SEPARATE BUSH 50×60×3		
27	**803198800**	1	O-RING	GB/T3452.1-2005	
28	**910302676**	1	SEPARATE BUSH		

804030179 RIGHT BUCKET CYLINDER

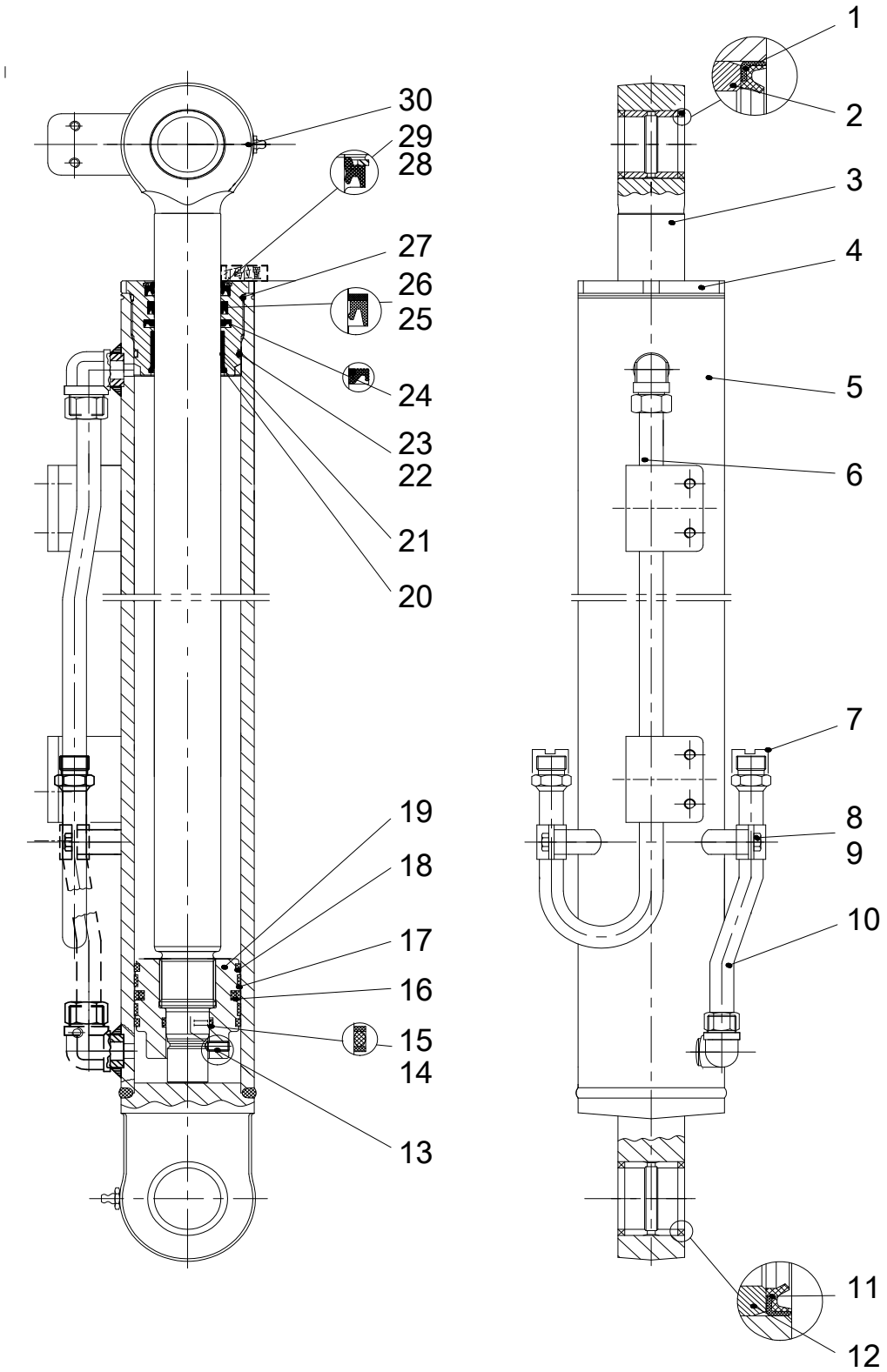

804030179 RIGHT BUCKET CYLINDER

402208120 BUCKET CYLINDER HYDRAULIC SYSTEM

No.	PART NUMBER	QTY	NAME	NOTE	PAGE
29	**803305278**	1	DUSTPROOF WASHER 50×62×7×10		
30	**801100343**	2	OIL CUP M10×1	JB/T7940.1-1995	
	915305785	1	XT870L.3.4.2.2A SEALING PACKAGE		

402208106 LIFTING HYDRAULIC SYSTEM

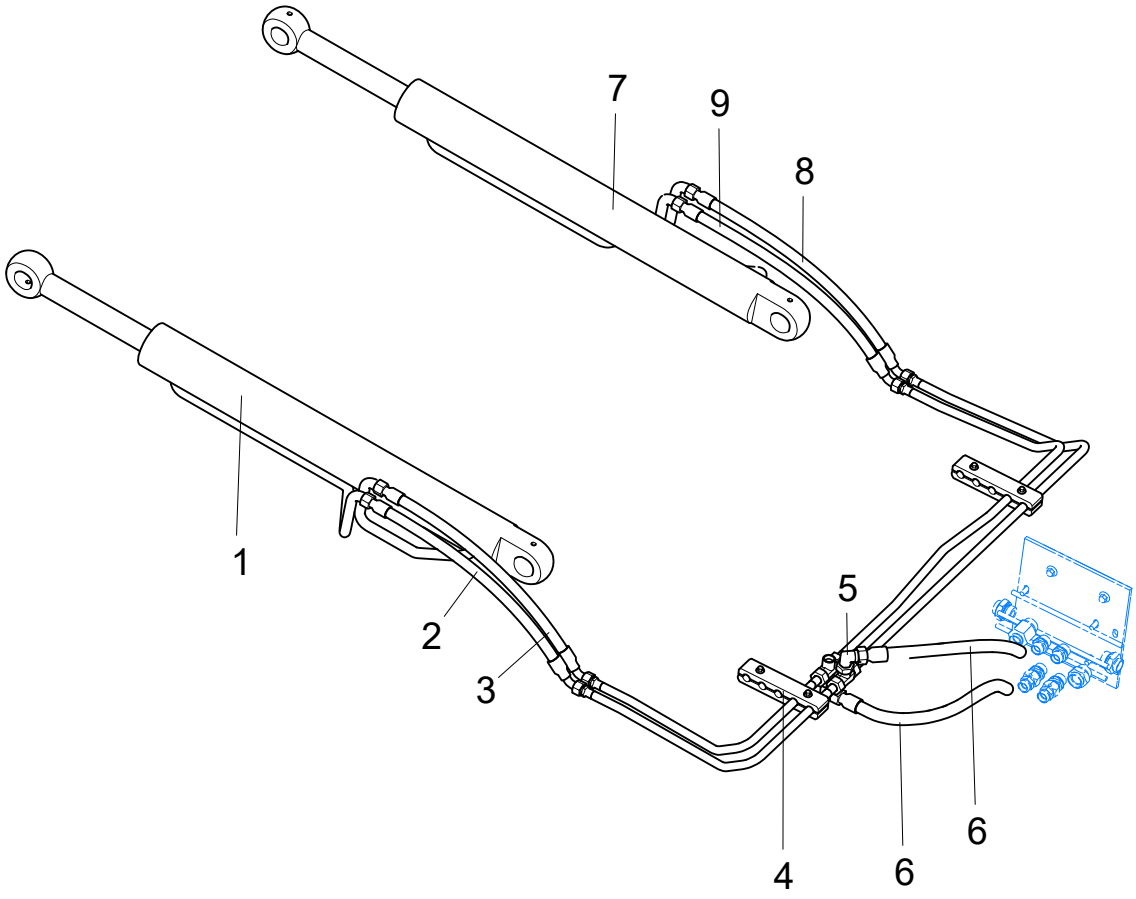

402208106 LIFTING HYDRAULIC SYSTEM

402208121 LOADING HYDRAULIC SYSTEM

No.	PART NUMBER	QTY	NAME	NOTE	PAGE
1	**804000341**	1	LEFT BOOM CYLINDER		
2	**803429484**	1	HOSE ASSEMBLY		
3	**803429484**	1	HOSE ASSEMBLY		
4	**402208105**	1	STEEL TUBE		
5	**803100741**	2	SPLICE		
6	**803421996**	2	HOSE ASSEMBLY		
7	**804000342**	1	RIGHT BOOM CYLINDER		
8	**803429484**	1	HOSE ASSEMBLY		
9	**803429484**	1	HOSE ASSEMBLY		

804000341 LEFT BOOM CYLINDER

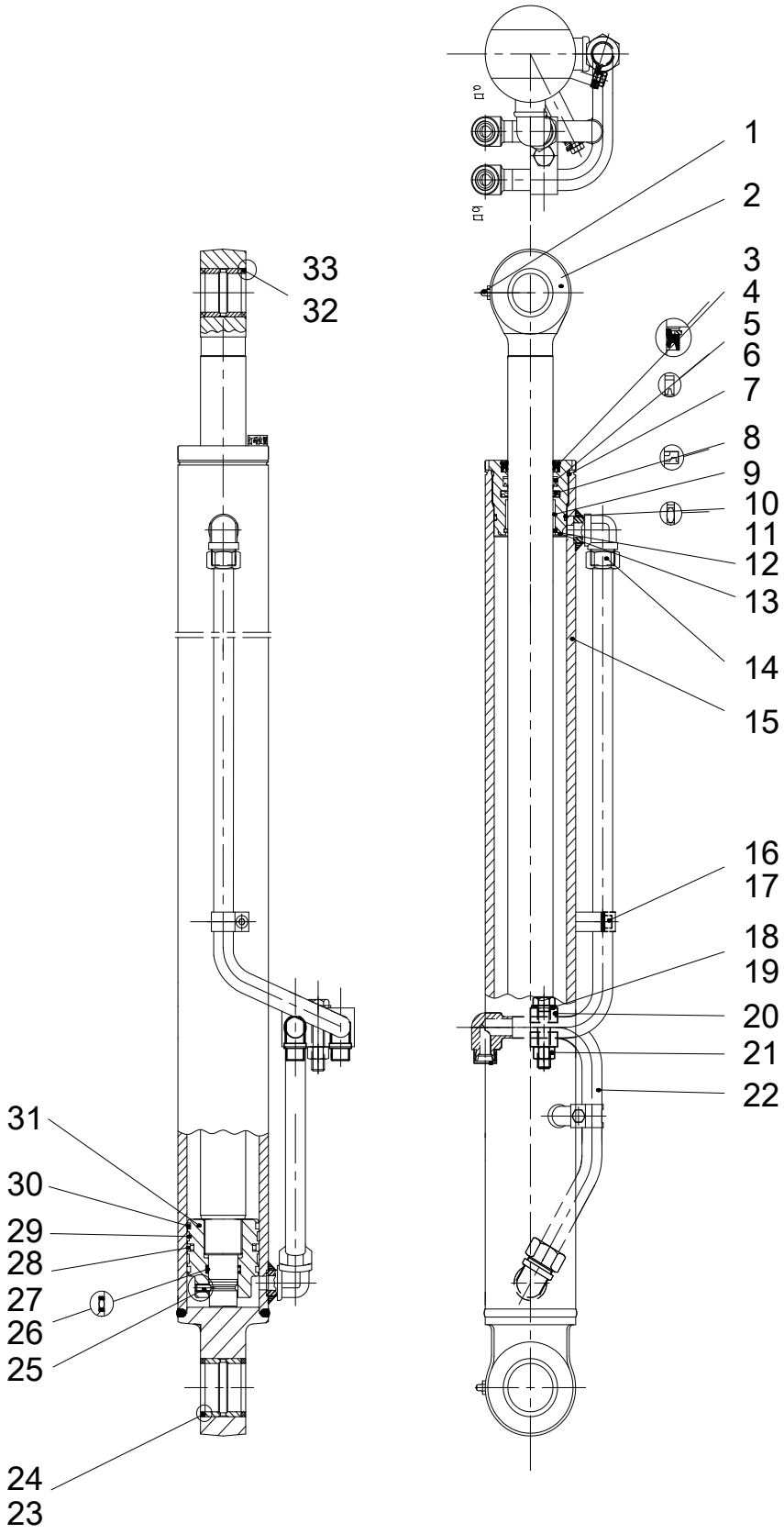

804000341 LEFT BOOM CYLINDER

402208106 LIFTING HYDRAULIC SYSTEM

No.	PART NUMBER	QTY	NAME	NOTE	PAGE
1	**801103215**	2	OIL CUP M10×1	JB/T7940.1-1995	
2	**910602116**	1	PISTON POLE		
3	**910302676**	1	SEPARATE BUSH		
4	**803305278**	1	DUSTPROOF WASHER 50×62×7×10		
5	**803305277**	1	SEPARATE BUSH 50×60×3		
6	**803305276**	1	SHAFT SEAL 50×60×6		
7	**803198800**	1	O-RING	GB/T3452.1-2005	
8	**803307186**	1	CUSHION RING		
9	**910302670**	1	SLIDING BEARING 50×55×30		
10	**803305059**	1	SEPARATE BUSH 75.7×80.5×1.25		
11	**803195291**	1	ORING 74.4×3.1		
12	**805403141**	1	SEPARATE BUSH 55	GB/T895.1-1986	
13	**914901450**	1	SLEEVE GUIDE		
14	**926107843**	2	OIL PIPE ASSY1		
15	**910602120**	1	CYLINDER		
16	**910302006**	1	PIPE CLAMP ASSY		
17	**805100151**	2	SCREW M10×16	GB/T70.1-2008	
18	**805041517**	1	BOLT M14×65	GB/T5781-2000	
19	**805302898**	1	SPRING WASHER		
20	**914901451**	2	RETAINER FLEX-PLATE		
21	**805200067**	1	NUT M14	GB/T6170-2000	
22	**926107842**	1	OIL PIPE ASSY2		
23	**914901452**	1	BUSH		
24	**803195128**	2	DUSTPROOF WASHER 50×60×5		
25	**805104504**	1	SCREWM12×1.75×110	GB/T78-2007	
26	**803307184**	2	SEPARATE BUSH 32.5×38.2×1.5		
27	**803199862**	1	O-RING	GB/T3452.1-2005	
28	**803305367**	1	SEAL RING 65×80×7.3		

804000341 LEFT BOOM CYLINDER

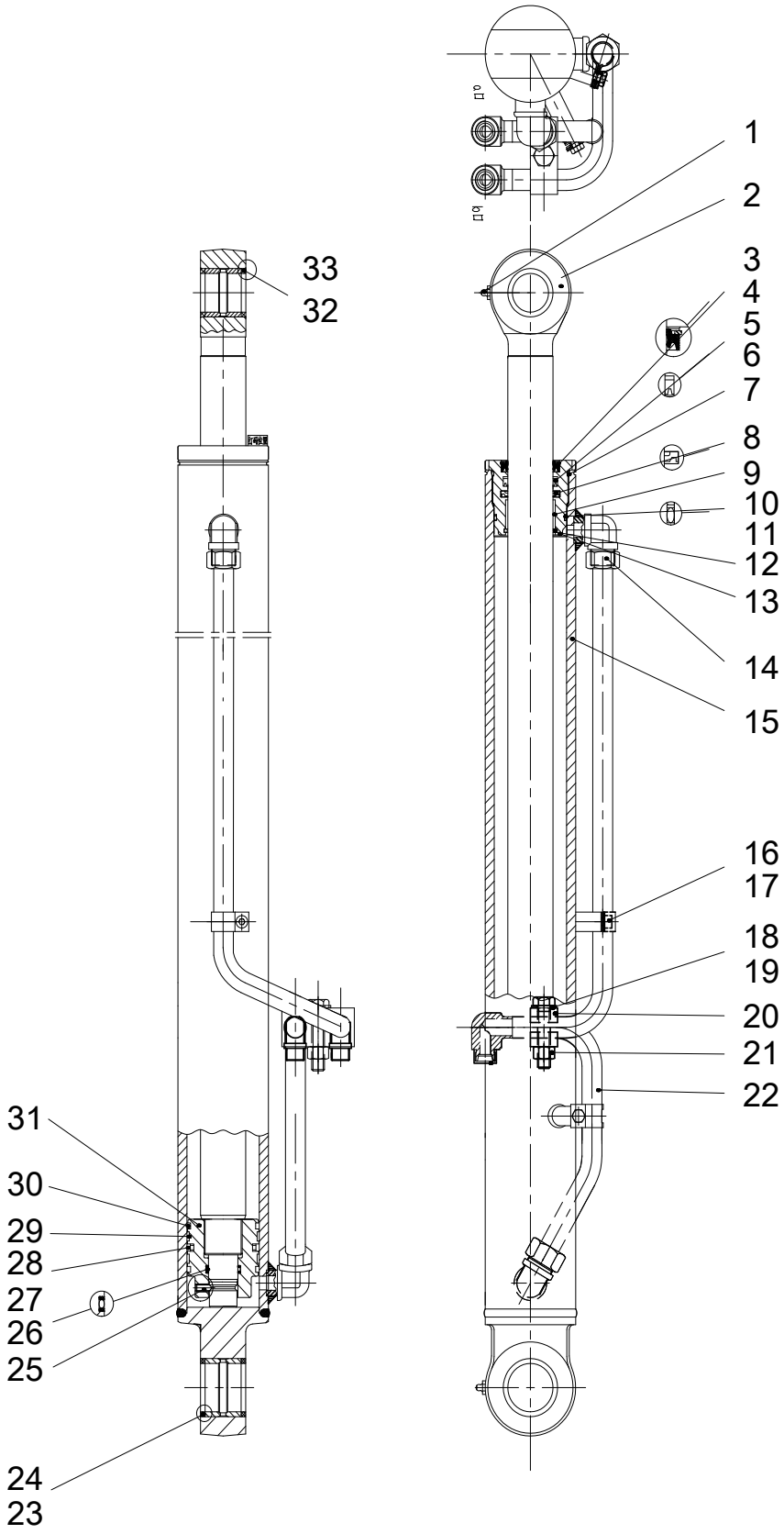

804000341 LEFT BOOM CYLINDER

402208106 LIFTING HYDRAULIC SYSTEM

No.	PART NUMBER	QTY	NAME	NOTE	PAGE
29	**803305368**	2	SUPPORT RING 80×75×9.5		
30	**803307185**	2	ANTI-POLLUTION RING 72×80×6		
31	**910302825**	1	PISTON		
32	**910302648**	1	BUSH		
33	**803305061**	2	DUSTPROOF WASHER 40×50×4		
	915305785	1	XT870L.3.4.2.2A SEALING PACKAGE	INCLUDING THE N-O.4,5,6,7,8,9,10,11,12,-26,27,28,29,30	

402208105 STEEL TUBE

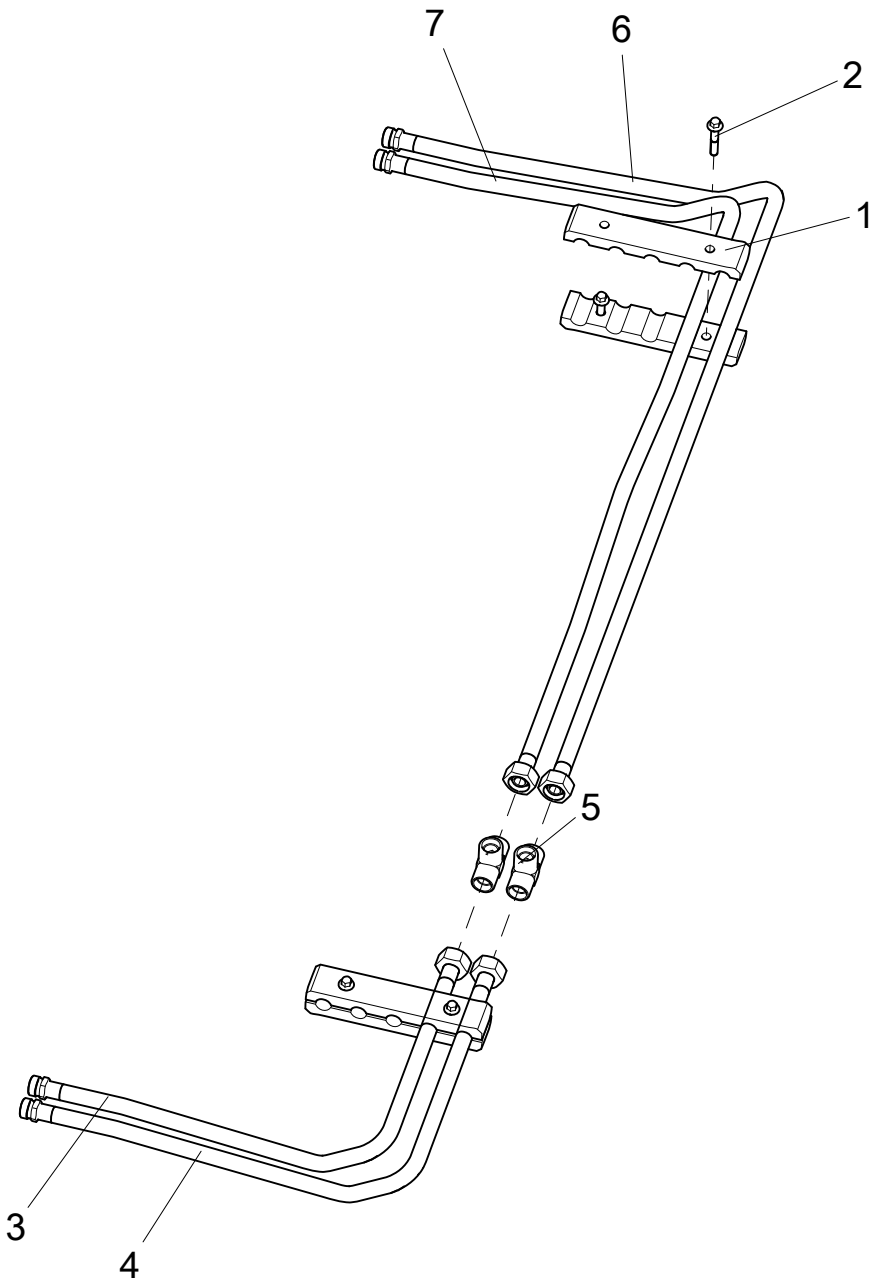

402208105 STEEL TUBE

402208106 LIFTING HYDRAULIC SYSTEM

No.	PART NUMBER	QTY	NAME	NOTE	PAGE
1	**402205156**	4	PIPE CLIP		
2	**805048853**	4	BOLT M8×45(DACROMET)	GB/T16674.1-2004	
3	**402208098**	1	PIPE CLIP		
4	**402208100**	1	PIPE CLIP		
5	**803105184**	2	SPLICE		
6	**402208104**	1	PIPE CLIP		
7	**402208102**	1	PIPE CLIP		

804000342 RIGHT BOOM CYLINDER

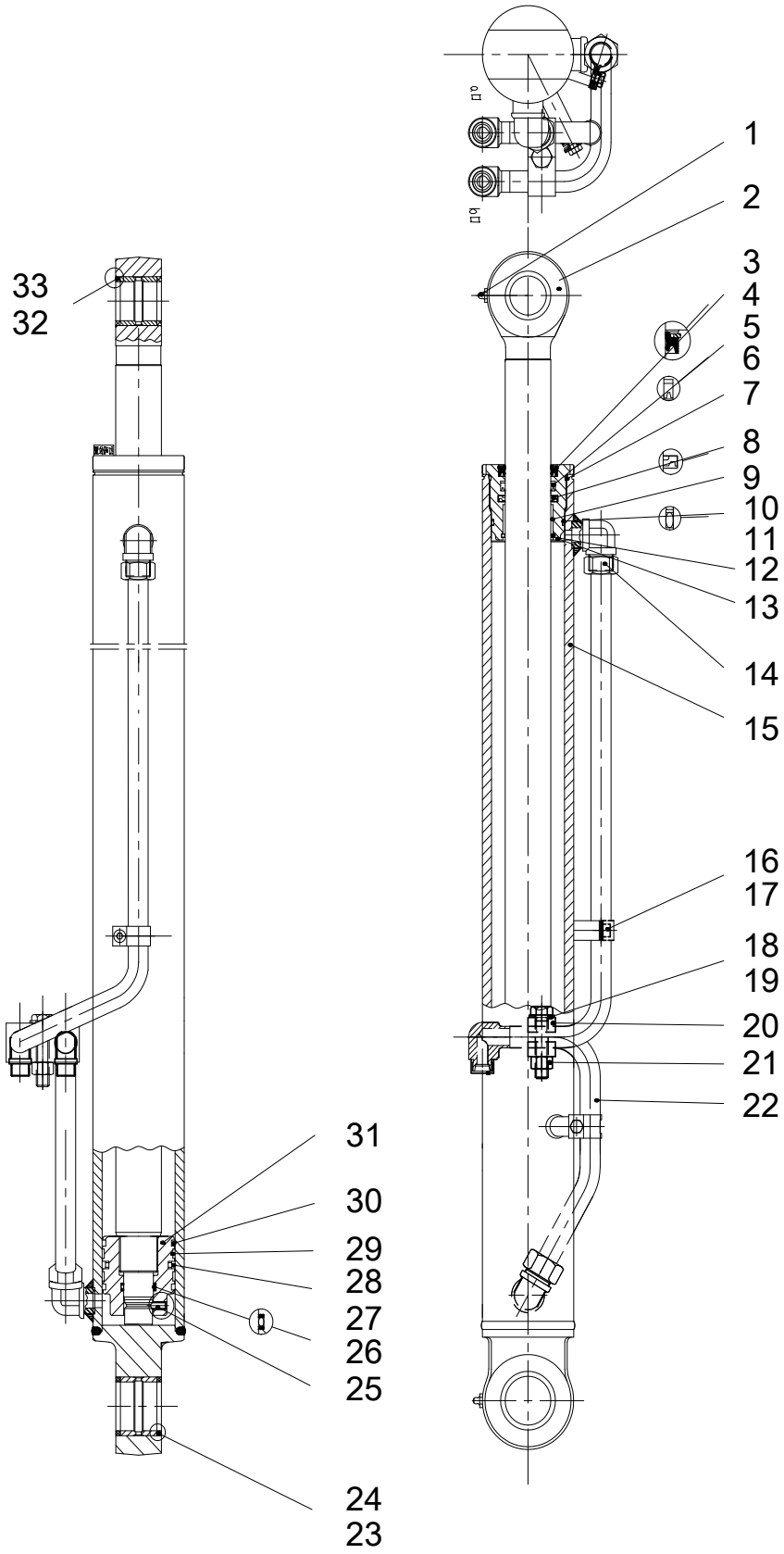

804000342 RIGHT BOOM CYLINDER

402208106 LIFTING HYDRAULIC SYSTEM

No.	PART NUMBER	QTY	NAME	NOTE	PAGE
1	**801103215**	2	OIL CUP M10×1	JB/T7940.1-1995	
2	**910602116**	1	PISTON POLE		
3	**910302676**	1	SEPARATE BUSH		
4	**803305278**	1	DUSTPROOF WASHER 50×62×7×10		
5	**803305277**	1	SEPARATE BUSH 50×60×3		
6	**803305276**	1	SHAFT SEAL 50×60×6		
7	**803198800**	1	O-RING	GB/T3452.1-2005	
8	**803307186**	1	CUSHION RING		
9	**910302670**	1	SLIDING BEARING 50×55×30		
10	**803305059**	1	SEPARATE BUSH 75.7×80.5×1.25		
11	**803195291**	1	ORING 74.4×3.1		
12	**805403141**	1	SEPARATE BUSH 55	GB/T895.1-1986	
13	**914901450**	1	SLEEVE GUIDE		
14	**926107841**	1	OIL PIPE ASSY1		
15	**910602113**	1	CYLINDER		
16	**910302006**	2	PIPE CLAMP ASSY		
17	**805100151**	2	SCREW M10×16	GB/T70.1-2008	
18	**805041517**	1	BOLT M14×65	GB/T5781-2000	
19	**805302898**	1	SPRING WASHER		
20	**914901451**	2	RETAINER FLEX-PLATE		
21	**805200067**	1	NUT M14	GB/T6170-2000	
22	**926107842**	1	OIL PIPE ASSY2		
23	**914901452**	1	BUSH		
24	**803195128**	2	DUSTPROOF WASHER 50×60×5		
25	**805104504**	1	SCREWM12×1.75×110	GB/T78-2007	
26	**803307184**	2	SEPARATE BUSH 32.5×38.2×1.5		
27	**803199862**	1	O-RING	GB/T3452.1-2005	
28	**803305367**	1	SEAL RING 65×80×7.3		

804000342 RIGHT BOOM CYLINDER

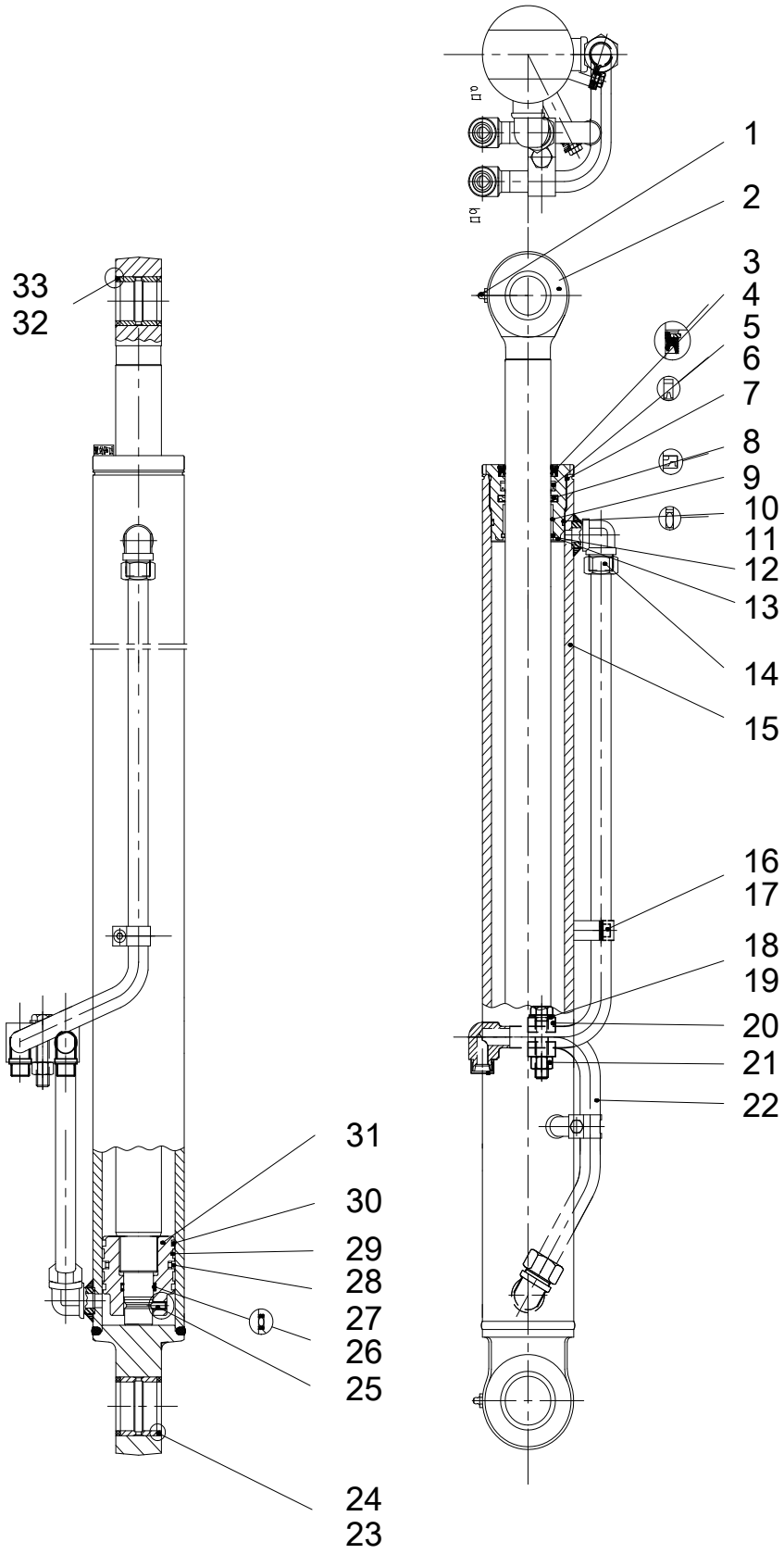

804000342 RIGHT BOOM CYLINDER

402208106 LIFTING HYDRAULIC SYSTEM

No.	PART NUMBER	QTY	NAME	NOTE	PAGE
29	**803305368**	2	SUPPORT RING 80×75×9.5		
30	**803307185**	2	ANTI-POLLUTION RING 72×80×6		
31	**910302825**	1	PISTON		
32	**910302648**	1	BUSH		
33	**803305061**	2	DUSTPROOF WASHER 40×50×4		
	915305785	1	XT870L.3.4.2.2A SEALING PACKAGE	INCLUDING THE N-O.4,5,6,7,8,9,10,11,12,-26,27,28,29,30	

402216307 CAB

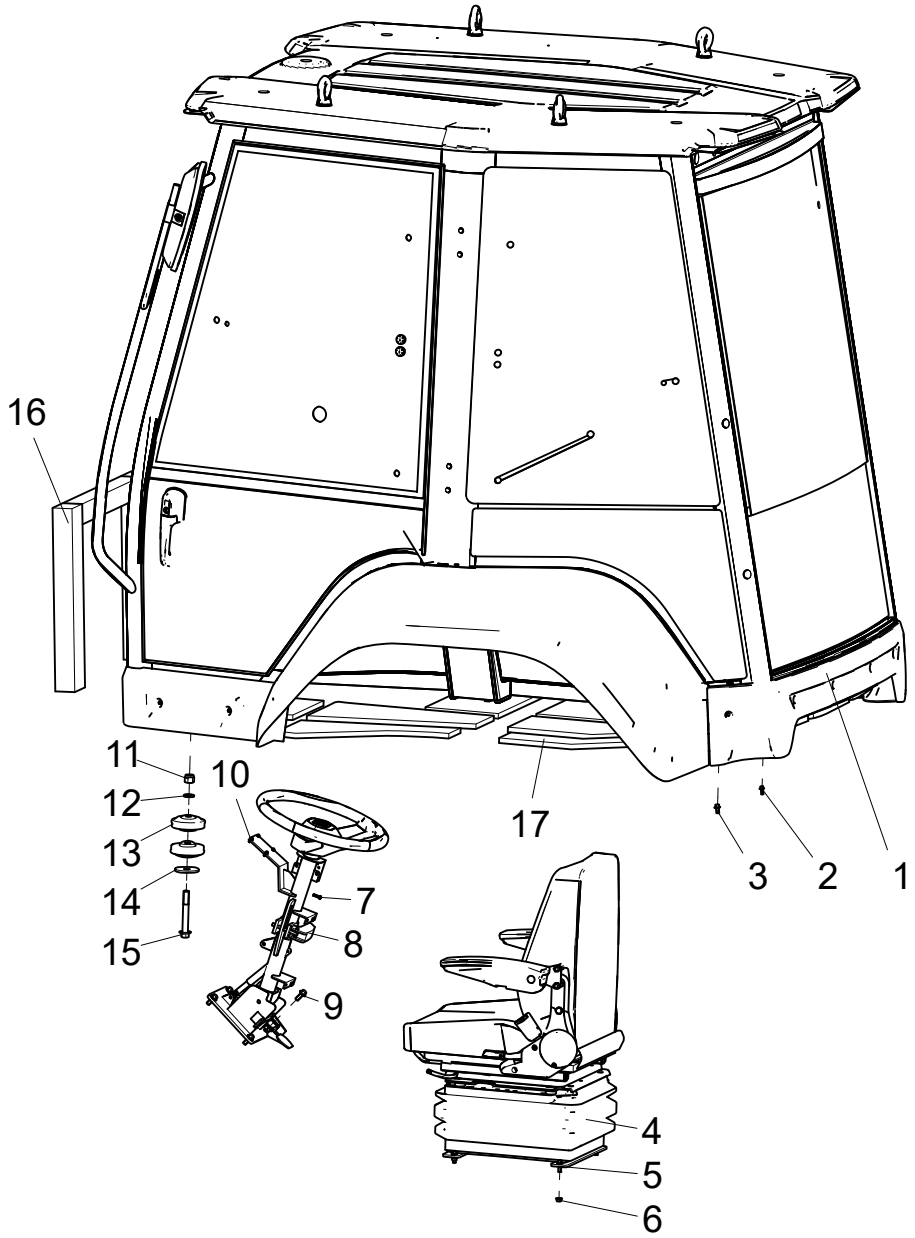

402216307 CAB

402216156 C2570AS

No.	PART NUMBER	QTY	NAME	NOTE	PAGE
1	**402216232**	1	CAB		
2	**805004709**	10	BOLT M6×16(DACROMET)	GB/T16674.1-2004	
3	**805004755**	4	BOLT M8×16 (DACROMET)	GB/T16674.1-2004	
4	**801972654**	1	SEAT		
5	**805004717**	4	BOLT M8×25	GB/T16674.1-2004	
6	**805238400**	4	NUT M8	GB/T6177.1-2000	
7	**805140016**	6	BOLT	GB/T818-2000	
8	**802152991**	1	STEERING COLUMN		
9	**805004763**	8	BOLT M10×25(DACROMET)	GB/T16674.1-2004	
10	**805140030**	4	SCREWM12×1.75×110	GB/T818-2000	
11	**805200211**	4	NUT M16	GB/T6182-2010	
12	**805338284**	4	SPRING WASHER 16	GB/T97.1-2002	
13	**801974835**	8	SHOCK CABSORBER		
14	**401000421**	4	RETAINER FLEX-PLATE		
15	**805047990**	4	BOLT M16×120	GB/T16674.1-2004	
16	**402217600**	3	FRONT INSULATION COTTON		
17	**402217543**	1	SPONGE		

402216232 CAB

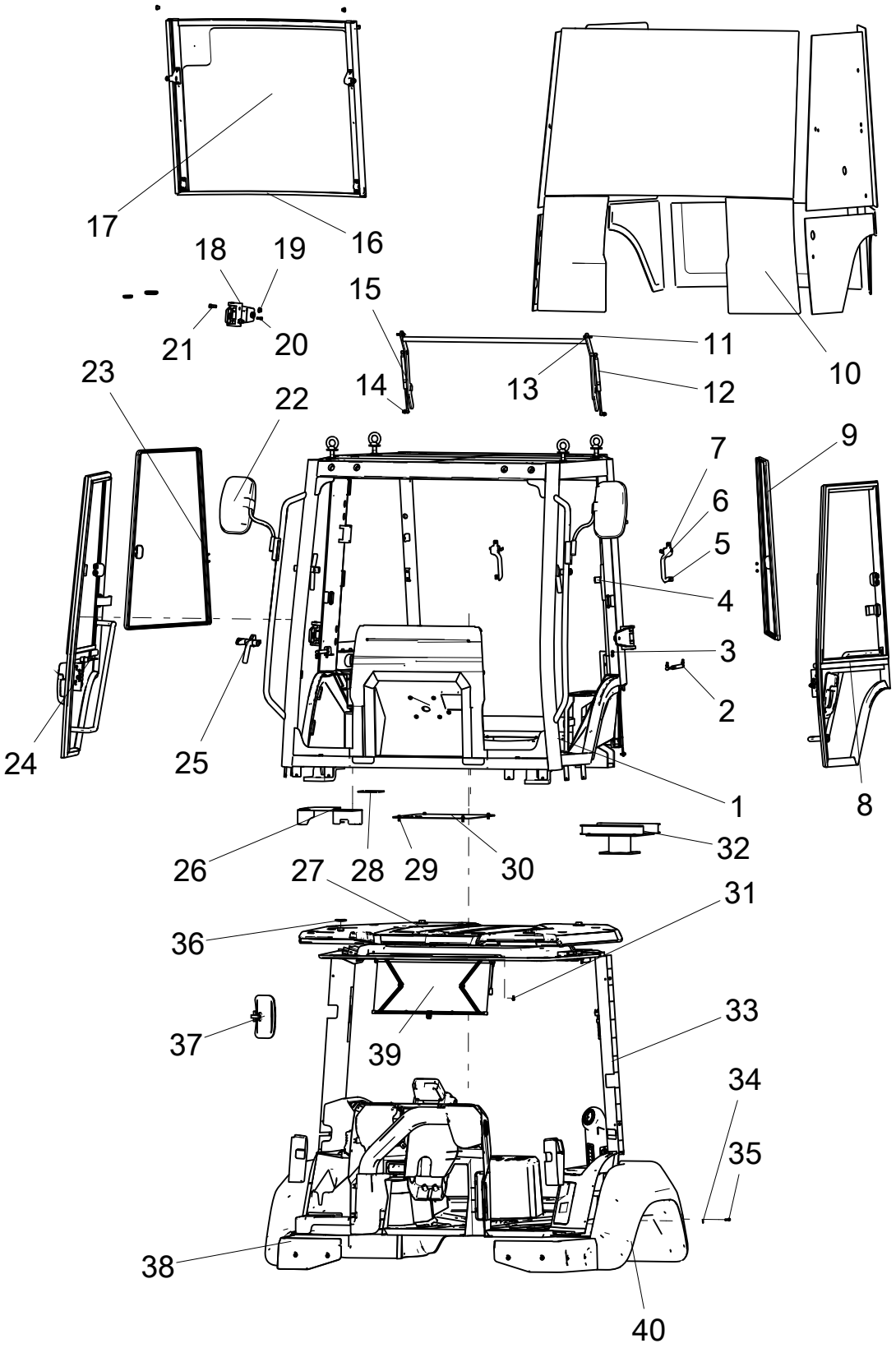

402216232 CAB

402216307 CAB

No.	PART NUMBER	QTY	NAME	NOTE	PAGE
1	**860570991**	1	WELDING ASSEMBLY OF THE CAB		
2	**802152994**	2	GAS SPRING		
3	**805100207**	4	SCREW M8×35	GB/T819.1-2000	
4	**801541811**	2	FLEXIBLE HANDLE		
5	**805338275**	4	WASHER 6 (DACROMET)	GB/T97.1-2002	
6	**802152995**	1	REAR WINDOW LOCK		
7	**805100196**	4	SCREW	GB/T70.1-2008	
8	**860570996**	1	LEFT DOOR ASSY		
9	**402209239**	1	LEFT REAR WINDOW ASSEMBLY		
10	**860570999**	1	GLASS ASSY		
11	**805338265**	2	SPRING WASHER 8	GB/T96.1-2002	
12	**802152993**	2	GAS SPRING		
13	**805047998**	2	BOLT M8×35	GB/T16674.1-2004	
14	**805203166**	2	NUT M8	GB/T6177.1-2000	
15	**860571000**	1	REAR SWING ROD		
16	**860571005**	1	SEAL ASSEMBLY		
17	**402209356**	1	REAR SLIDING WNDOW		
18	**860570995**	4	DOOR HINGE		
19	**805204006**	8	NUT 12	GB/T6177.1-2000	
20	**805140907**	8	SCREW M8×20 (DACROMET)	GB/T70.1-2008	
21	**805006412**	8	BOLT M12×30	GB/T5783-2000	
22	**860571004**	1	REARVIEW MIRROR COMPONENT		
23	**402209238**	1	RIGHT REAR WINDOW ASSEMBLY		
24	**860570997**	1	RIGHT DOOR ASSY		
25	**802152992**	2	RIGHT WINDOW HANDLE		
26	**860570994**	1	FRONT RIGHT AIR DUCT GUARD		
27	**805047602**	4	BOLT M20×75	GB/T5783-2000	
28	**860571001**	1	COVER		

402216232 CAB

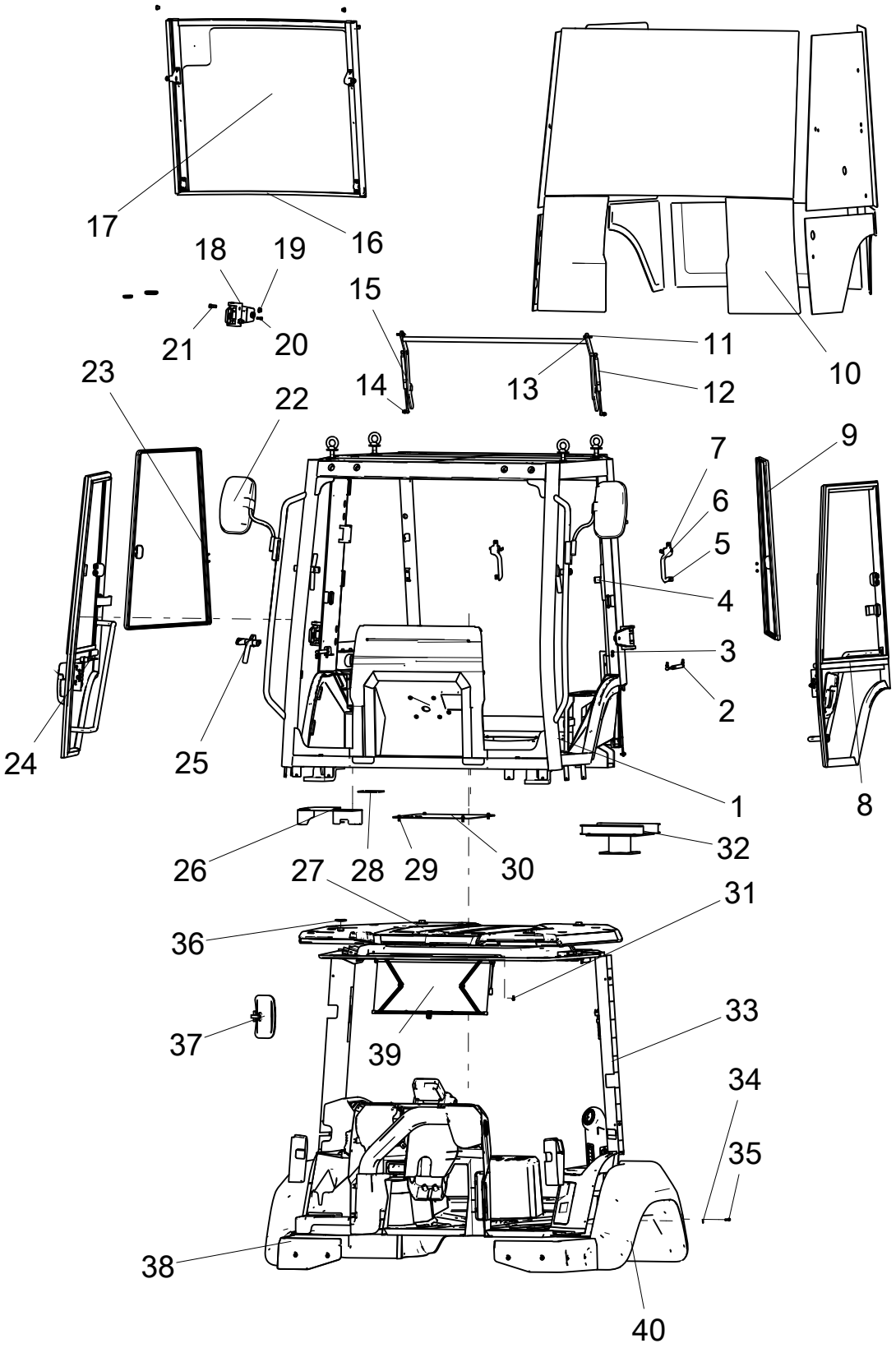

402216232 CAB

402216307 CAB

No.	PART NUMBER	QTY	NAME	NOTE	PAGE
29	**805004756**	6	BOLT M8×20 (DACROMET)	GB/T16674.1-2004	
30	**860570993**	1	COVER PLATE		
31	**805004709**	2	BOLT M6×16(DACROMET)	GB/T16674.1-2004	
32	**860572856**	1	SEAT MOUNTING ASSEMBLY		
33	**860571003**	1	INNER SETS		
34	**805300083**	28	GASKET 6	GB/T96.1-2002	
35	**805004713**	28	BOLT M6×20(DACROMET)	GB/T16674.1-2004	
36	**805338322**	8	SPRING WASHER 20	GB/T96.1-2002	
37	**801976810**	1	INTERIOR REAR-VIEW MIRROR		
38	**860570992**	1	EXTERIOR TRIM		
39	**860570998**	1	ABAT VENT700×300		
40	**860611000**	1	CAB ELECTRICAL SYSTEM		

802152995 REAR WINDOW LOCK

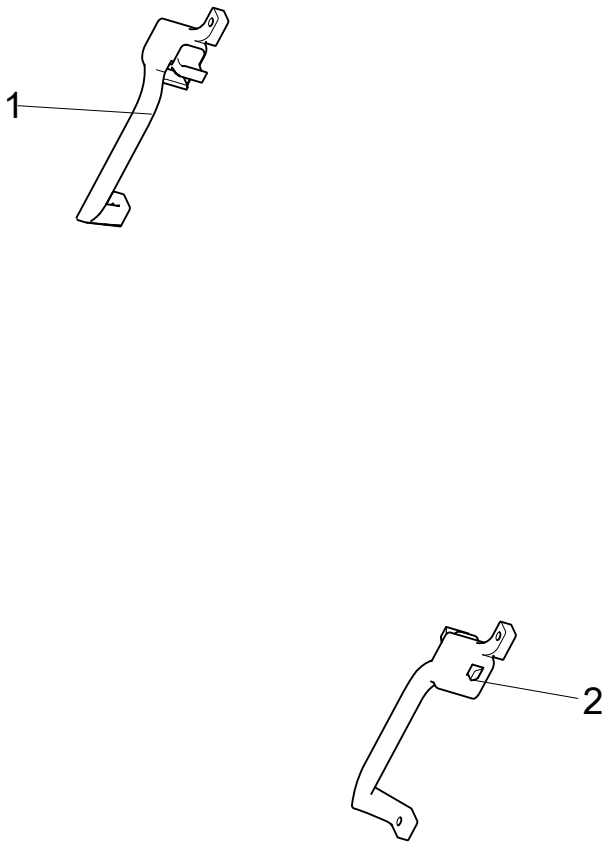

802152995 REAR WINDOW LOCK

402216232 CAB

No.	PART NUMBER	QTY	NAME	NOTE	PAGE
1	**860614917**	1	LEFT LOCK		
2	**860614919**	1	RIGHT LOCK		

860570996 LEFT DOOR ASSY

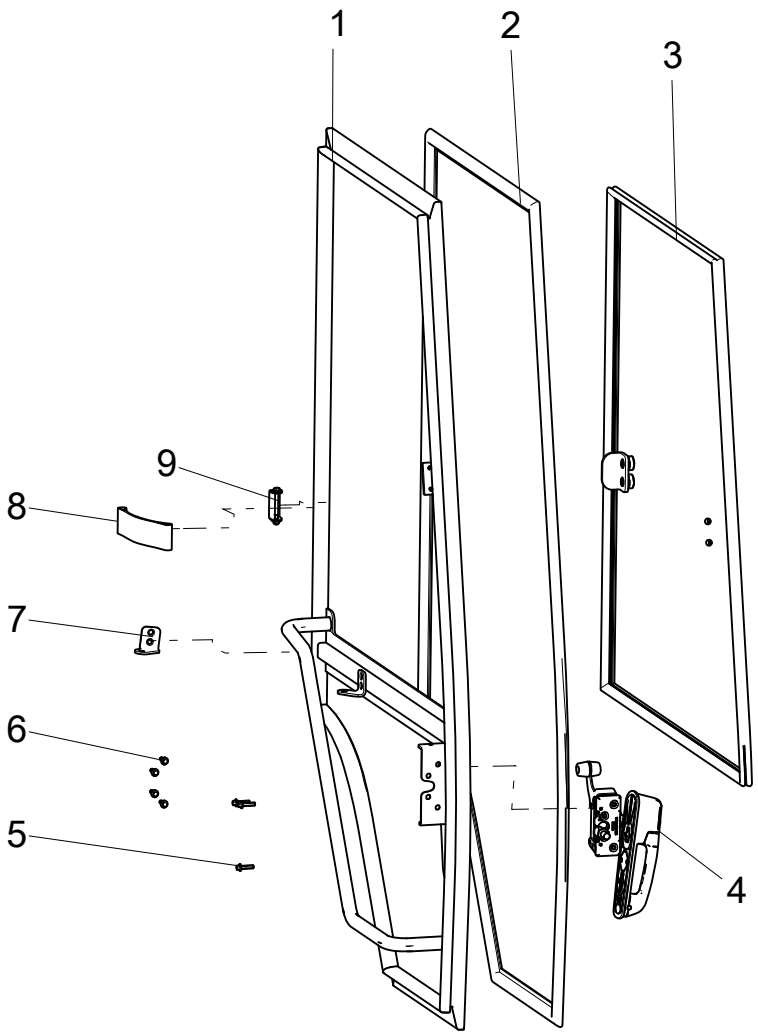

860570996 LEFT DOOR ASSY

402216232 CAB

No.	PART NUMBER	QTY	NAME	NOTE	PAGE
1	**860599254**	1	WELDMENT OF LEFT DOOR SKELETON		
2	**801973736**	1	LEFT DOOR SEALING STRIP		
3	**402209447**	1	GLASS INSTALLATION COMPONENT		
4	**802152998**	1	LEFT GATE LOCK		
5	**805047993**	1	BOLT M6×25 (DACROMET)	GB/T16674.1-2004	
6	**805004713**	3	BOLT M6×20(DACROMET)	GB/T16674.1-2004	
7	**402209309**	4	INSTALLATION BASE FOR LEFT AIR SPRING		
8	**860599251**	1	NYLON BAND		
9	**860599252**	1	DOOR LIMIT		

402209239 LEFT REAR WINDOW ASSEMBLY

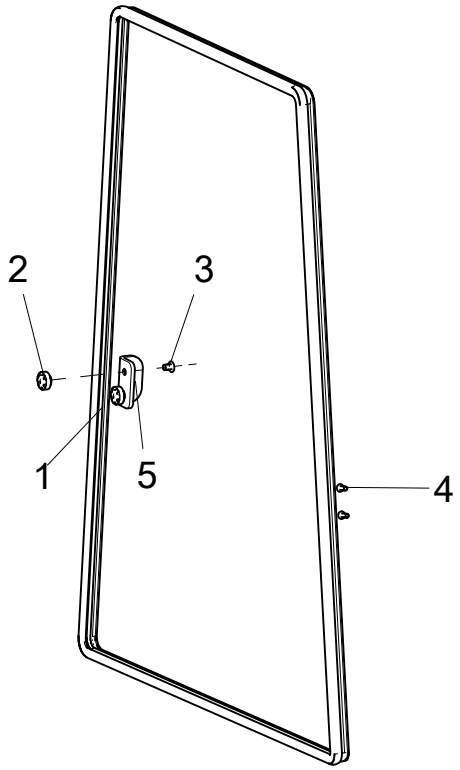

402209239 LEFT REAR WINDOW ASSEMBLY

402216232 CAB

No.	PART NUMBER	QTY	NAME	NOTE	PAGE
1	**801973732**	1	LEFT REAR GLASS SEPARATION SEAL		
2	**802153000**	2	FIXED BLOCK		
3	**805103926**	2	SCREW M8×12	GB/T819.2-1997	
4	**805100061**	2	SCREW M6×16	GB/T819.1-2000	
5	**402209445**	1	HANDLE		

860570999 GLASS ASSY

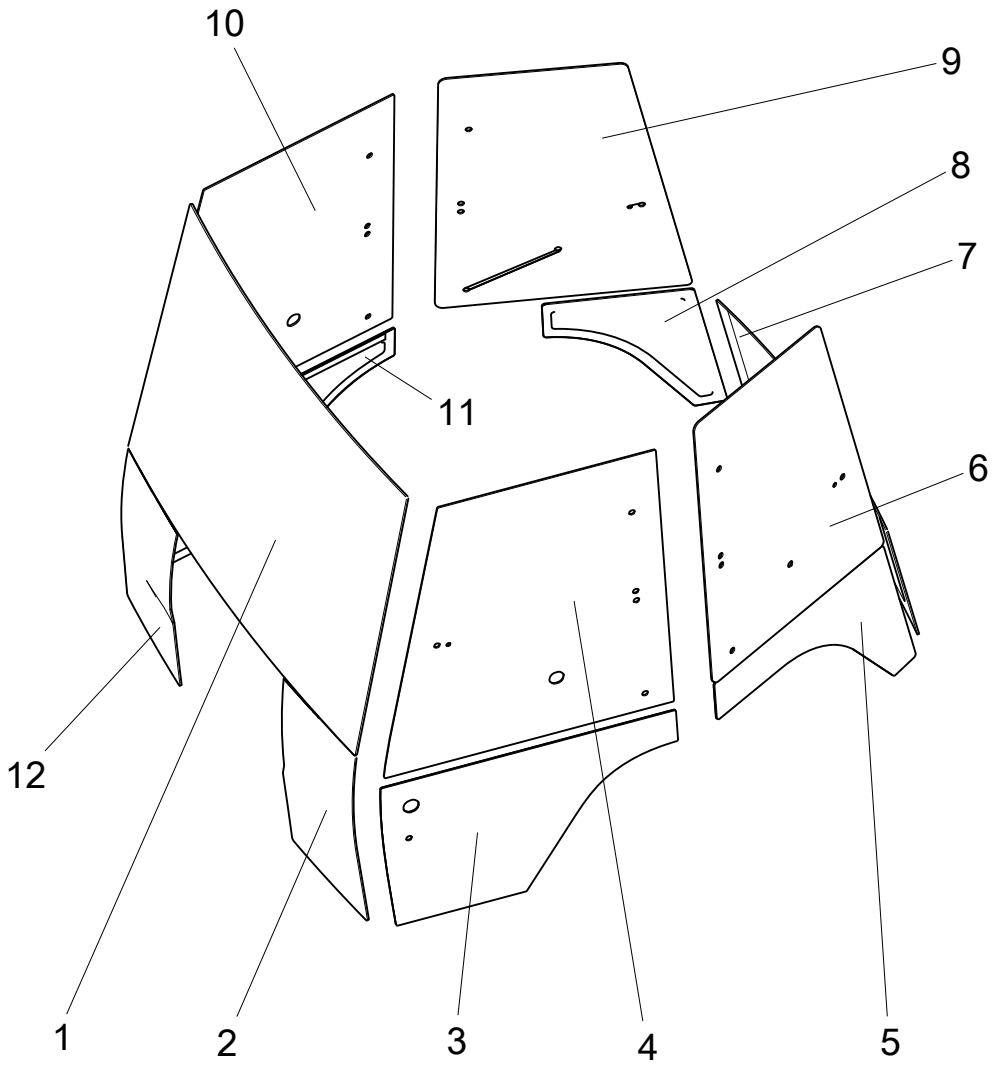

860570999 GLASS ASSY

402216232 CAB

No.	PART NUMBER	QTY	NAME	NOTE	PAGE
1	**860573612**	1	FRONT GLASS		
2	**860573613**	1	FRONT LEFT LOWER GLASS		
3	**860573620**	1	LEFT UNDER GLASS		
4	**860573622**	1	LEFT DOOR UPPER GLASS		
5	**860573615**	1	LEFT REAR LOWER GLASS		
6	**860573623**	1	LEFT REAR UPPER GLASS		
7	**860573618**	1	BACK DOWN GLASS		
8	**860573616**	1	RIGHT REAR LOWER GLASS		
9	**860573617**	1	RIGHT REAR UPPER GLASS		
10	**860573619**	1	RIGHT DOOR UPPER GLASS		
11	**860573621**	1	RIGHT UNDER GLASS		
12	**860573614**	1	FRONT RIGHT LOWER GLASS		

860571005 SEAL ASSEMBLY

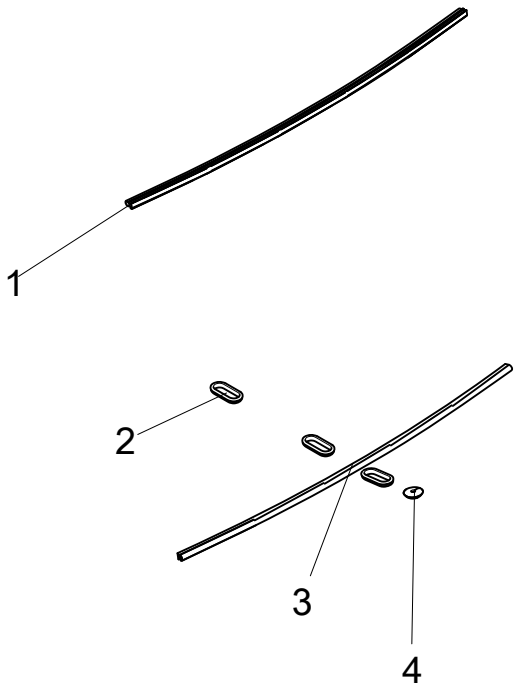

860571005 SEAL ASSEMBLY

402216232 CAB

No.	PART NUMBER	QTY	NAME	NOTE	PAGE
1	**801973729**	1	SEALING STRIP		
2	**402209306**	3	BOARD LEFT BACK		
3	**801973730**	1	SEALING STRIP		
4	**402209281**	1	STRENGTHENING PLATE		

402209356 REAR SLIDING WNDOW

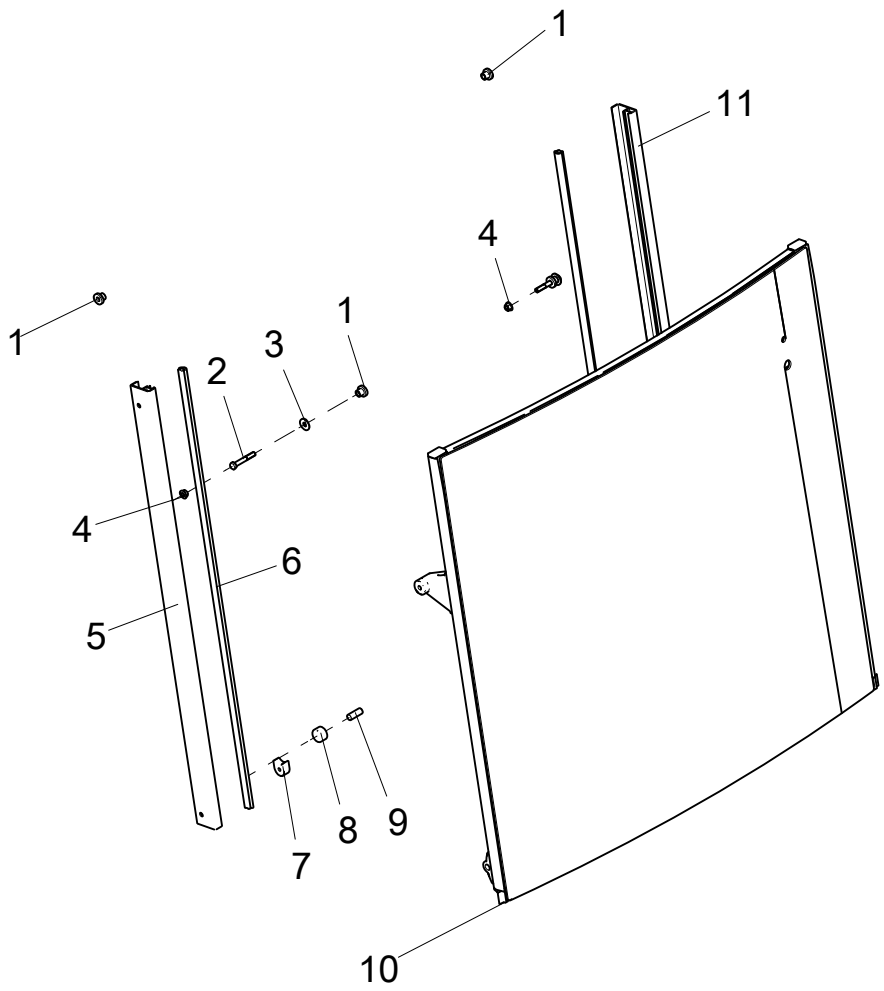

402209356 REAR SLIDING WNDOW

402216232 CAB

No.	PART NUMBER	QTY	NAME	NOTE	PAGE
1	**860614921**	4	SEPARATE BUSH		
2	**805048366**	2	BOLT M8×55(DACROMET)	GB/T5782-2000	
3	**805338265**	2	SPRING WASHER 8	GB/T96.1-2002	
4	**805203166**	2	NUT M8	GB/T6177.1-2000	
5	**860614924**	1	TRACK		
6	**860614922**	2	SEALING STRIP		
7	**860593379**	2	LIMIT BLOCK		
8	**860614920**	2	WHEEL		
9	**860614916**	2	SLIDER SHAFT		
10	**402214746**	1	BACKLITE WINDOWSHIELD		
11	**860614918**	1	TRACK		

860571004 REARVIEW MIRROR COMPONENT

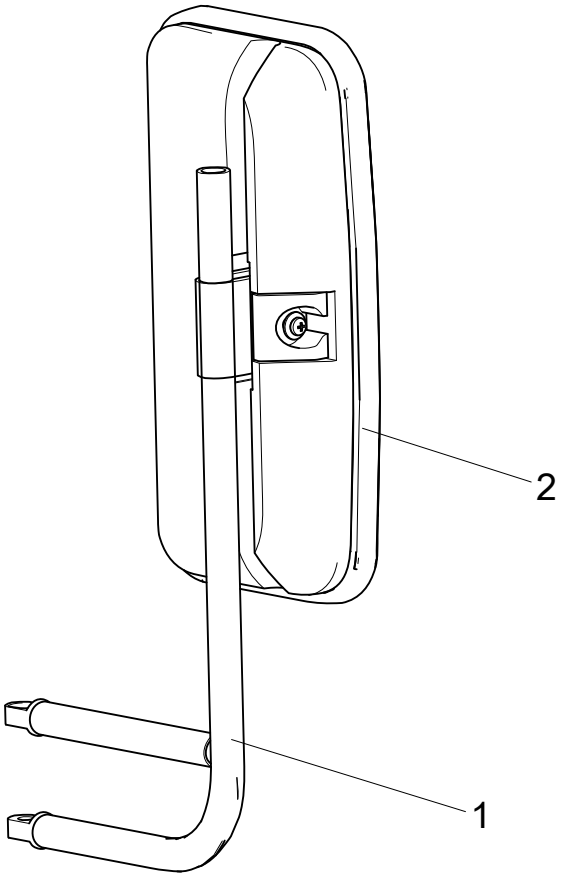

860571004 REARVIEW MIRROR COMPONENT

402216232 CAB

No.	PART NUMBER	QTY	NAME	NOTE	PAGE
1	**860595101**	2	BRACKET		
2	**860595102**	2	REARVIEW ASSY		

402209238 RIGHT REAR WINDOW ASSEMBLY

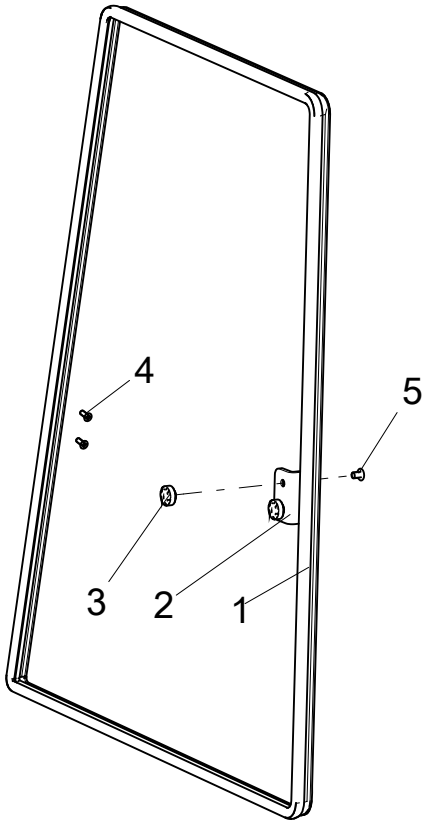

402209238 RIGHT REAR WINDOW ASSEMBLY

402216232 CAB

No.	PART NUMBER	QTY	NAME	NOTE	PAGE
1	**801973731**	1	RIGHT REAR GLASS SEPARATION SEAL		
2	**402209445**	1	HANDLE		
3	**802153000**	2	FIXED BLOCK		
4	**805100061**	2	SCREW M6×16	GB/T819.1-2000	
5	**805103926**	2	SCREW M8×12	GB/T819.2-1997	

860570997 RIGHT DOOR ASSY

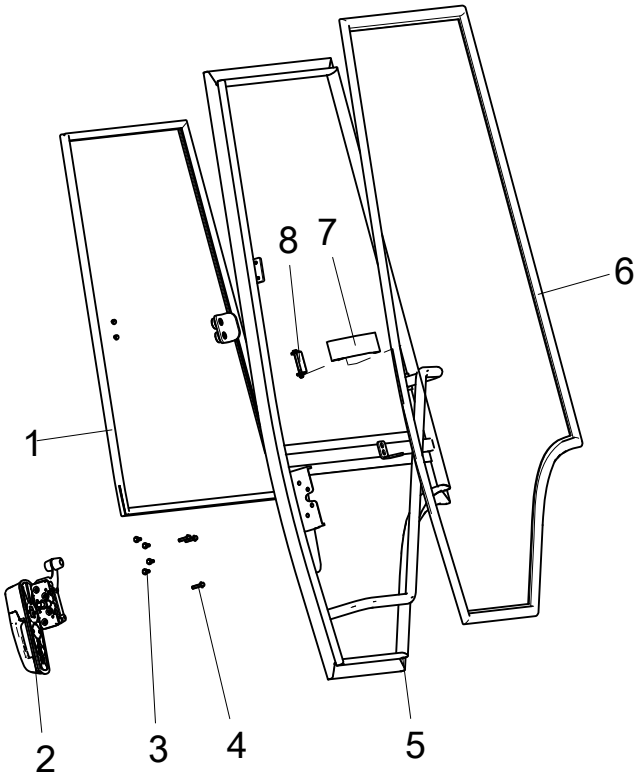

860570997 RIGHT DOOR ASSY

402216232 CAB

No.	PART NUMBER	QTY	NAME	NOTE	PAGE
1	**402209357**	1	GLASS INSTALLATION COMPONENT		
2	**802152997**	1	RIGHT GATE LOCK		
3	**805004713**	4	BOLT M6×20(DACROMET)	GB/T16674.1-2004	
4	**805047993**	3	BOLT M6×25 (DACROMET)	GB/T16674.1-2004	
5	**860599255**	1	THE RIGHT DOOR		
6	**801973735**	1	RIGHT DOOR SEALING STRIP		
7	**860599251**	1	NYLON BAND		
8	**860599252**	1	DOOR LIMIT		

860611000 CAB ELECTRICAL SYSTEM

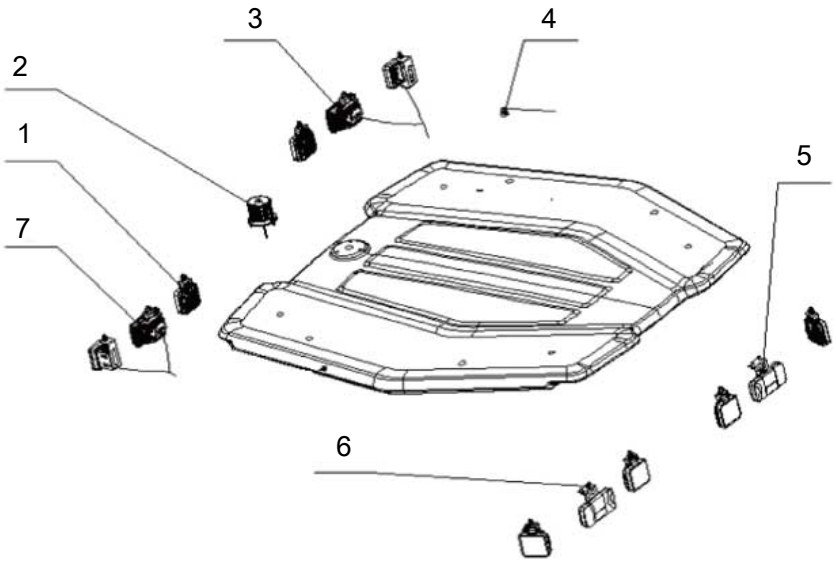

860611000 CAB ELECTRICAL SYSTEM

402216232 CAB

No.	PART NUMBER	QTY	NAME	NOTE	PAGE
1	**860583145**	1	LIGHT		
2	**860583153**	1	STROBE LIGHT		
3	**860583149**	1	RIGHT FRONT COMBINATION LAMP		
4	**860583144**	1	ANTENNA		
5	**860583152**	1	RIGHT REAR POSITION LIGHT		
6	**860583151**	1	LEFT REAR POSITION LIGHT		
7	**860583146**	1	LEFT FRONT COMBINATION LAMP		

860611000 CAB ELECTRICAL SYSTEM

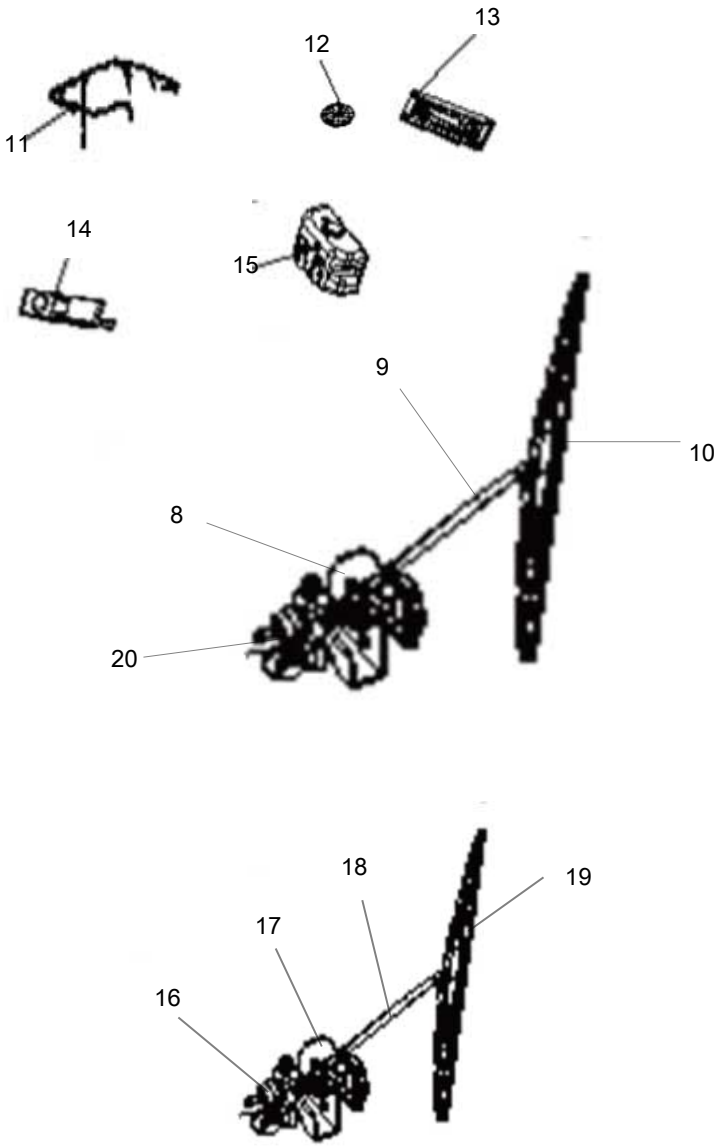

860611000 CAB ELECTRICAL SYSTEM

402216232 CAB

No.	PART NUMBER	QTY	NAME	NOTE	PAGE
8	**860583141**	1	FRONT WIPER MOTOR		
9	**860583142**	1	FRONT WIPER ARM		
10	**860583143**	1	FRONT WIPER BLADE		
11	**860583154**	1	CEILING WIRING HARNESS		
12	**860583156**	1	LOUDSPEAKER		
13	**860583155**	1	RADIO		
14	**860583158**	1	DOME LIGHT		
15	**860583159**	1	DUAL MOTOR SCRUBBER		
16	**860583160**	1	RAIN WIPER SYSTEM		
17	**860583161**	1	REAR WIPER MOTOR		
18	**860583162**	1	REAR WIPER ARM		
19	**860583163**	1	REAR WIPER BLADE		
20	**860583140**	1	DOUBLE ROD WIPER		

402216259 ELECTRIC SYSTEM

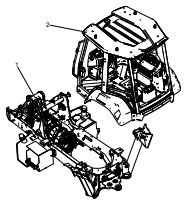

402216259 ELECTRIC SYSTEM

402216156 C2570AS

No.	PART NUMBER	QTY	NAME	NOTE	PAGE
1	**402216261**	1	FRAME ELECTRIC SYSTEM		
2	**402216262**	1	ELECTRICAL		

402216261 FRAME ELECTRIC SYSTEM

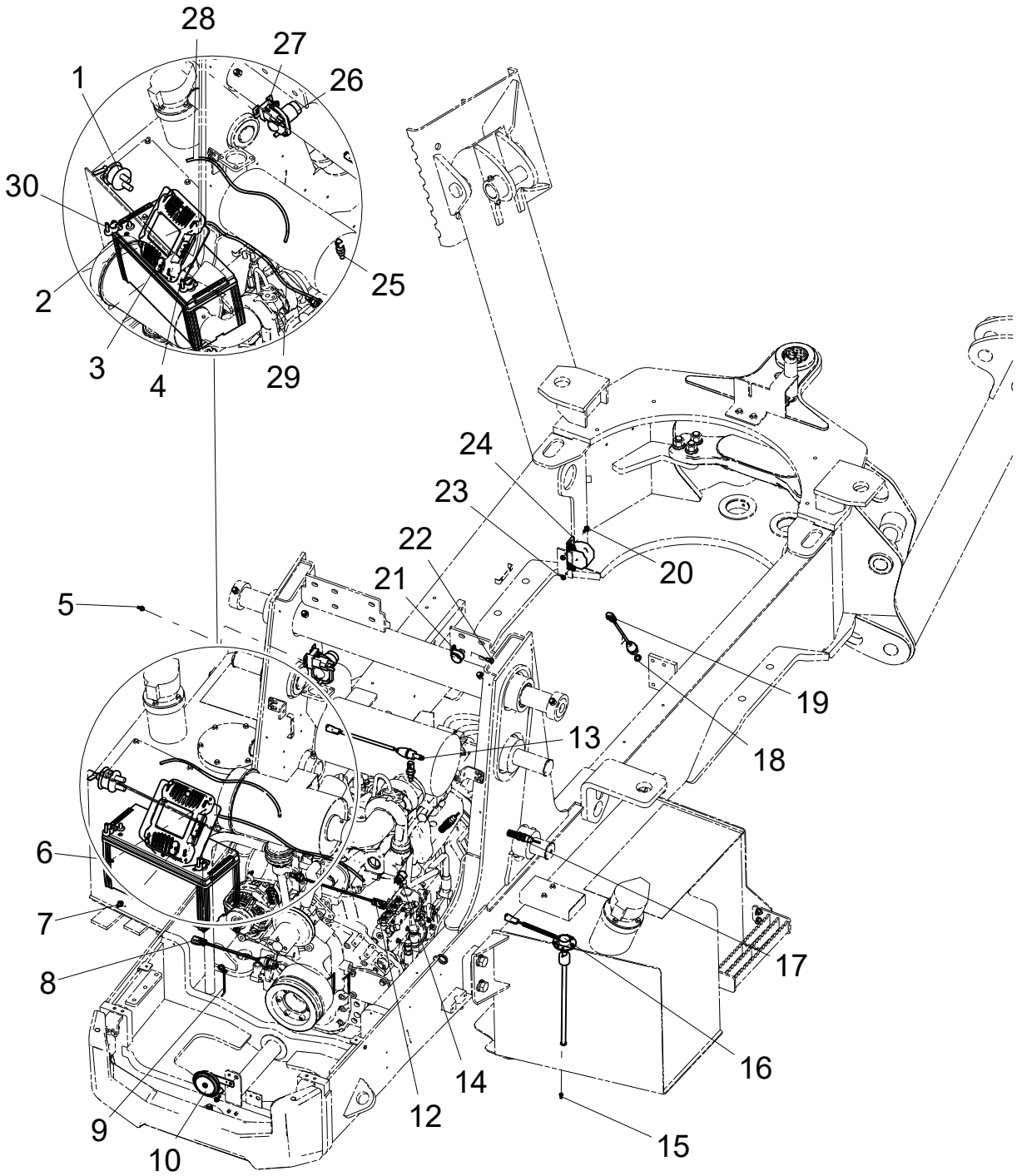

402216261 FRAME ELECTRIC SYSTEM

402216259 ELECTRIC SYSTEM

No.	PART NUMBER	QTY	NAME	NOTE	PAGE
1	**803604579**	1	BATTERY NEGATIVE SWITCH		
2	**801900007**	1	BATTERY		
3	**803824425**	1	CONTROLLER		
4	**402212146**	1	CONTROLLER MOUNTING PLATE		
5	**805004834**	9	BOLT M6×12(DACROMET)	GB/T16674.1-2004	
6	**805047993**	4	BOLT M6×25 (DACROMET)	GB/T16674.1-2004	
7	**805047997**	4	BOLT M8×12(DACROMET)	GB/T16674.1-2004	
8	**803823458**	1	PRESSURE SWITCH		
9	**801970978**	30	CONNECTOR CABLE TIE 4.8×190	GNP-190STB	
10	**803595728**	1	HORN		
11	**805000616**	8	BOLT M8×12	GB/T5783-2000	
12	**803594731**	1	TEMPERATURE DETECT SWITCH		
13	**813502390**	1	PRESSURE SWITCH		
14	**813502150**	1	OIL TEMPERATURE TRANSDUCER		
15	**805140014**	5	SCREW M5×12	GB/T818-2000	
16	**813502513**	1	ENGINE OIL SENSORS		
17	**803684564**	2	SENSOR		
18	**805301418**	1	WASHER 12	Q/SC1294-2000	
19	**803821544**	1	105064901 PRESSURE SWITCH		
20	**805004709**	6	BOLT M6×16(DACROMET)	GB/T16674.1-2004	
21	**803300172**	10	CUTTING SLEEVE Φ30	TJBC	
22	**805046503**	10	BOLT M8×16 (DACROMET)	GB/T5783-2000	
23	**805135720**	3	NUT M6(DACROMET)	GB/T6177.1-2000	
24	**813502141**	1	REVERSING BEEPER		
25	**813501974**	1	WATER TEMPERATURE SENSOR		
26	**803684467**	1	POWER MASTER SWITCH		
27	**803684544**	1	STAR–UP RELAY		
28	**402216257**	1	BATTERY WIRE		

402216261 FRAME ELECTRIC SYSTEM

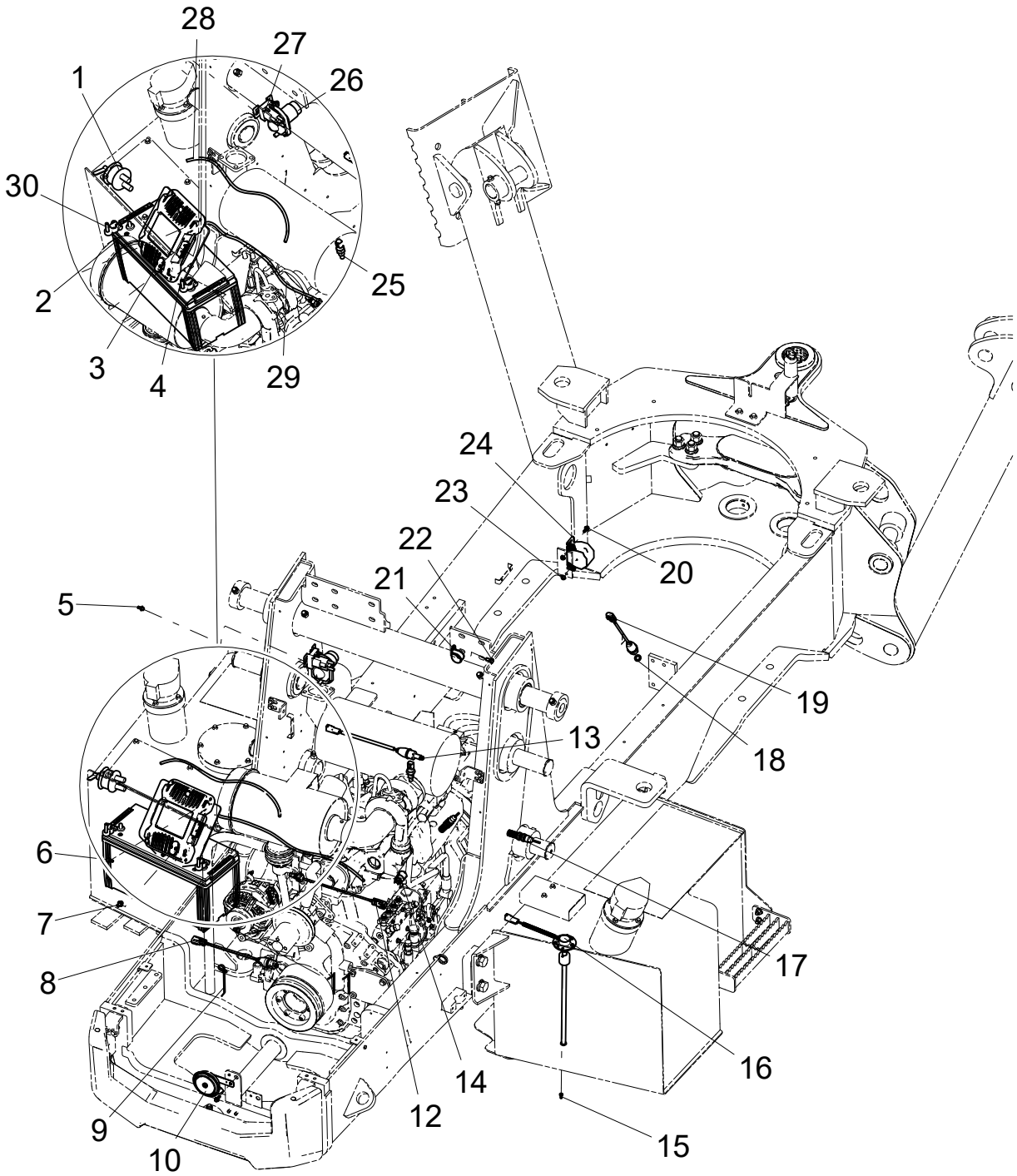

402216261 FRAME ELECTRIC SYSTEM

402216259 ELECTRIC SYSTEM

No.	PART NUMBER	QTY	NAME	NOTE	PAGE
29	**402216256**	1	WIRING HARNESS		
30	**803607768**	2	CYLINDRICAL CONNECTOR		

402216262 ELECTRICAL

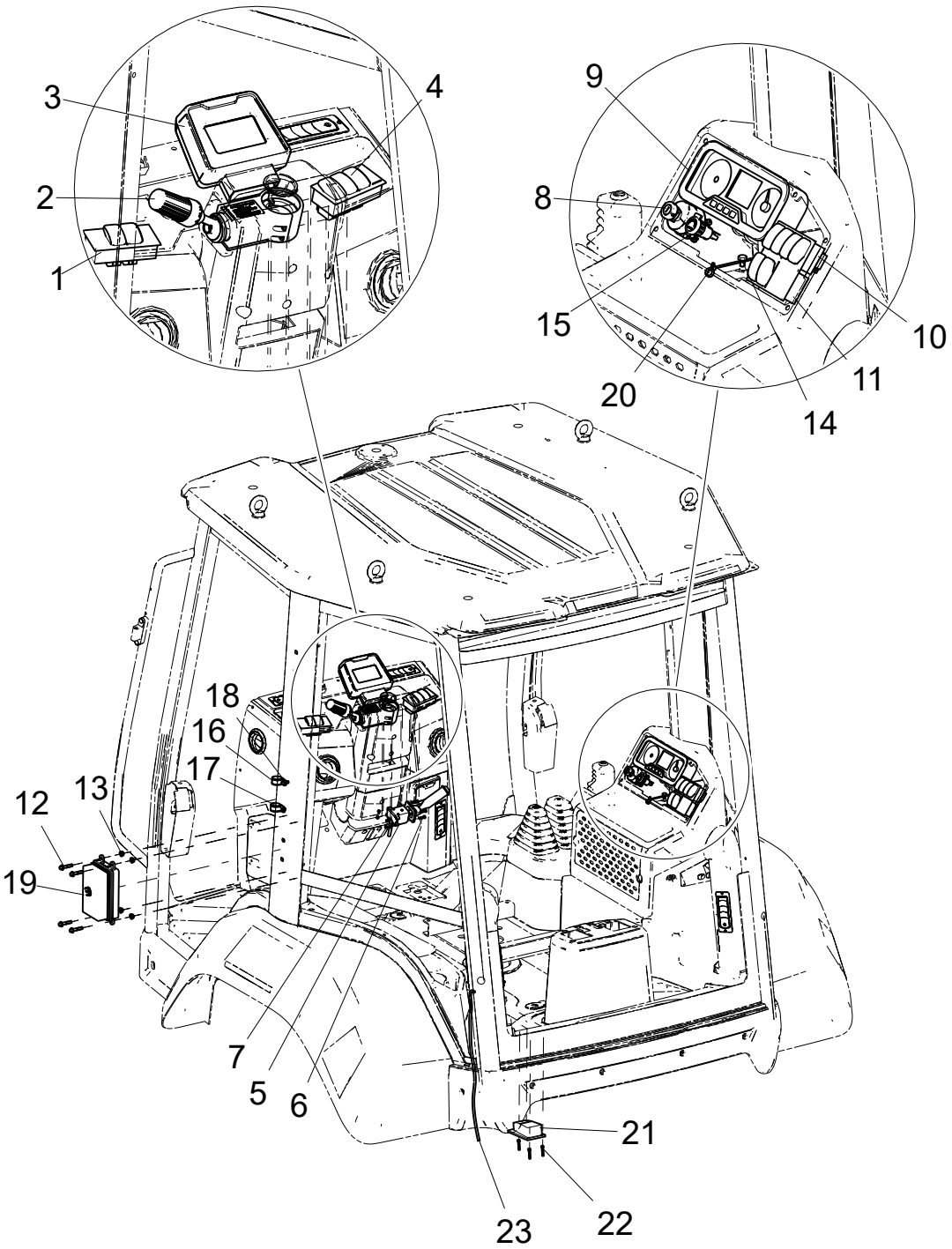

402216262 ELECTRICAL

402216259 ELECTRIC SYSTEM

No.	PART NUMBER	QTY	NAME	NOTE	PAGE
1	**803808531**	1	COMBINATION ROCKER SWITCH		
2	**272102446**	1	HAND SHANK		
3	**813508775**	1	FRONT METERS ASSEMBLY		
4	**803823824**	1	COMBINATION ROCKER SWITCH		
5	**803698650**	1	RYOMA COMBINATION SWITCH		
6	**805140016**	4	BOLT	GB/T818-2000	
7	**805238482**	4	NUT	GB/T6170-2000	
8	**813502499**	1	KEY SWITCH		
9	**813508774**	1	RIGHT INSTRUMENT PANEL		
10	**803824424**	1	COMBINATION ROCKER SWITCH		
11	**803823825**	1	COMBINATION ROCKER SWITCH		
12	**805047999**	4	BOLT M8×40	GB/T16674.1-2004	
13	**805238400**	4	NUT M8	GB/T6177.1-2000	
14	**805000616**	2	BOLT M8×12	GB/T5783-2000	
15	**813501095**	1	POWER INTAKE		
16	**803300172**	5	CUTTING SLEEVE Φ30	TJBC	
17	**805140013**	2	SCREW M5×10	GB/T818-2000	
18	**805004755**	5	BOLT M8×16 (DACROMET)	GB/T16674.1-2004	
19	**803808493**	1	CENTRAL CONTROL BOX		
20	**801970978**	20	CONNECTOR CABLE TIE 4.8×190	GNP-190STB	
21	**803644338**	1	BREAK SWITCH (SAME AAS HRF-MD212C)		
22	**805141137**	3	SCREW M5×30	GB/T70.1-2008	
23	**402216258**	1	CAB WIRE		

803808493 CENTRAL CONTROL BOX

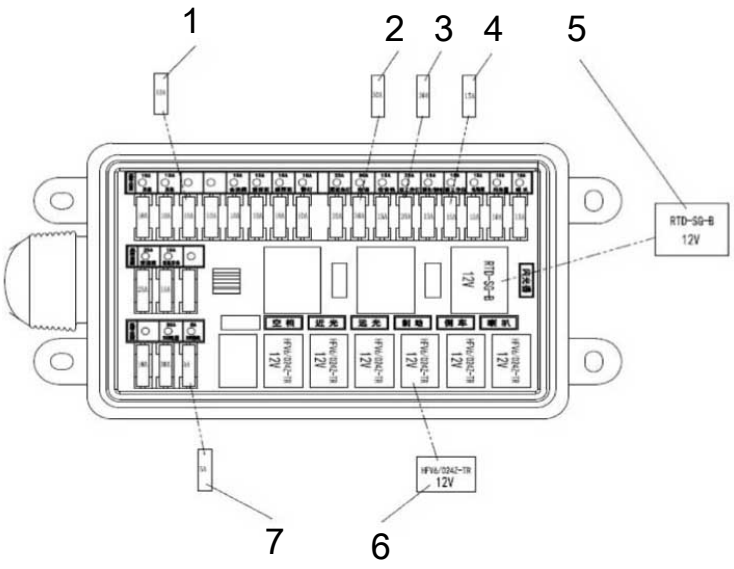

803808493 CENTRAL CONTROL BOX

402216262 ELECTRICAL

No.	PART NUMBER	QTY	NAME	NOTE	PAGE
1	**803682280**	10	FUSE 10A		
2	**860127790**	2	SAFETY LEVER 30A		
3	**803682282**	2	FUSE 20A		
4	**803682281**	5	FUSE 15A		
5	**803678578**	1	FLASHER		
6	**803670807**	6	RELAY		
7	**803807431**	1	FUSE ZEEMAN		

402216341 POWER SYSTEM

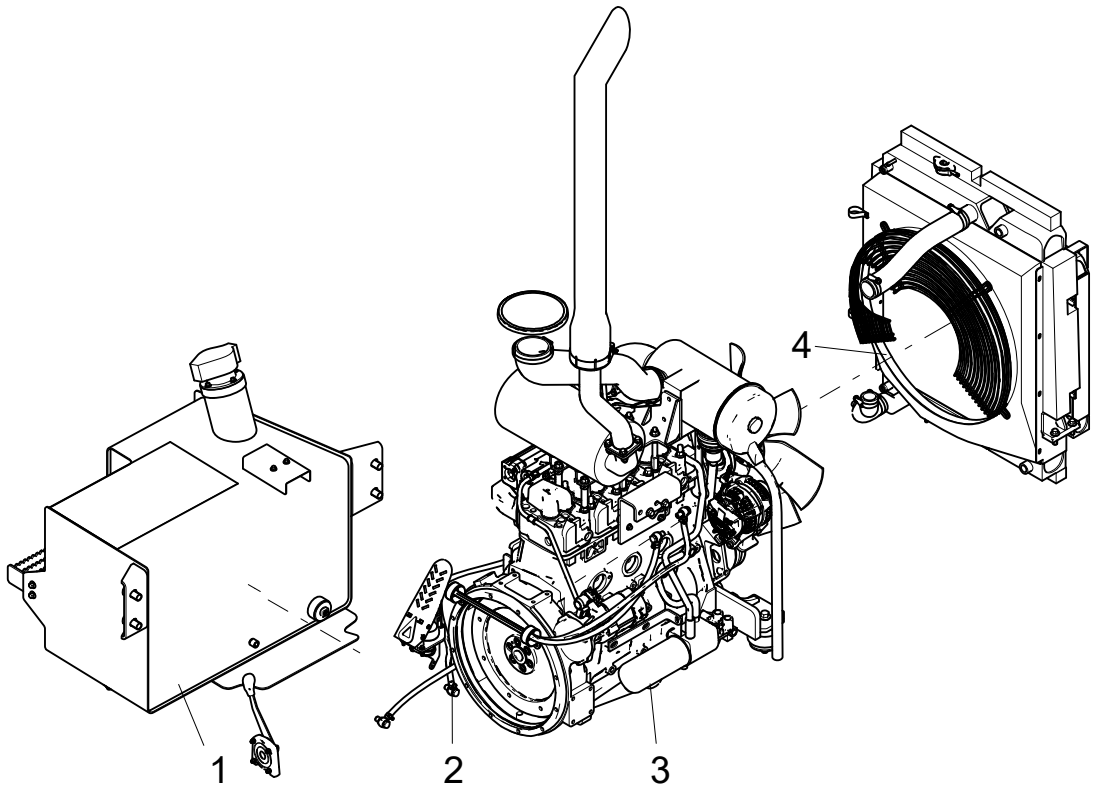

402216341 POWER SYSTEM

402216156 C2570AS

No.	PART NUMBER	QTY	NAME	NOTE	PAGE
1	**402216339**	1	FUEL TANK ASSY		
2	**402216343**	1	FUEL CIRCUIT ASSEMBLY		
3	**402216342**	1	ENGINE ASSY		
4	**402216345**	1	RADIATOR ASSY		

402216339 FUEL TANK ASSY

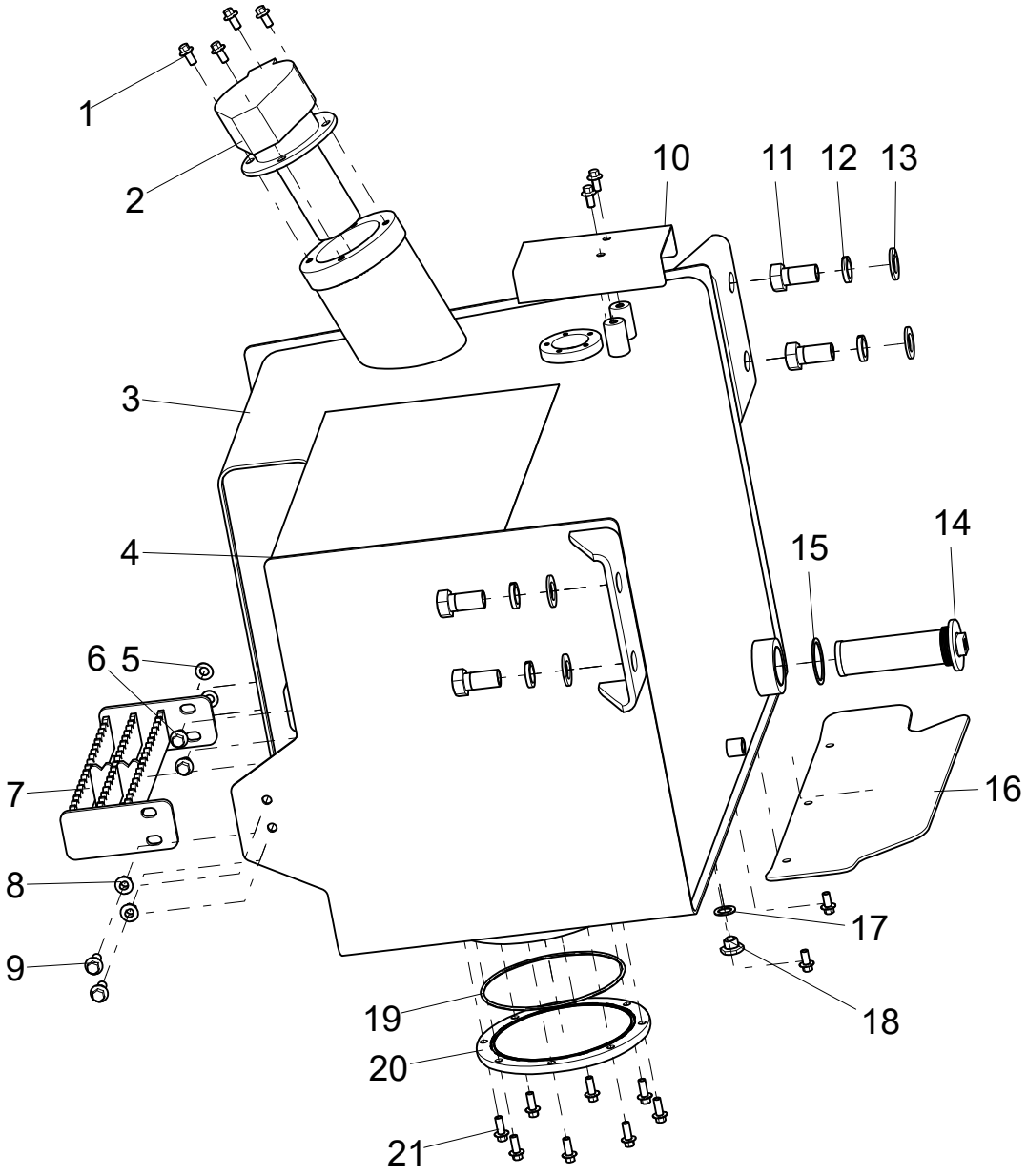

402216339 FUEL TANK ASSY

402216341 POWER SYSTEM

No.	PART NUMBER	QTY	NAME	NOTE	PAGE
1	**805004755**	9	BOLT M8×16 (DACROMET)	GB/T16674.1-2004	
2	**803164230**	1	OIL FILLER FILTER		
3	**402216337**	1	FUEL TANK		
4	**402400484**	1	ANTI-SLIP TAPE		
5	**805338278**	4	WASHER 10	GB/T97.1-2002	
6	**805048005**	2	BOLT M10×16(DACROMET)	GB/T16674.1-2004	
7	**402217230**	1	BOARD		
8	**805238533**	2	NUT 10	GB/T6177.1-2000	
9	**805004763**	2	BOLT M10×25(DACROMET)	GB/T16674.1-2004	
10	**402210822**	1	CYLINDER GUARD		
11	**805046588**	4	BOLT M20×40	GB/T5783-2000	
12	**805300023**	4	WASHER 20	GB/T93-1987	
13	**805300112**	4	WASHER 20	GB/T97.1-2002	
14	**250200471**	1	OIL FILTER ASSEMBLY		
15	**803164100**	1	WASHER 45		
16	**402208980**	1	SEPARATE SHEET		
17	**805301411**	1	RING	Q/SC1294-2000	
18	**803184623**	1	PLUG SCREW	QC/T385-1999	
19	**803401168**	1	ORING164.69×3.53	260N552-90	
20	**251808558**	1	COVER		
21	**805004756**	8	BOLT M8×20 (DACROMET)	GB/T16674.1-2004	

402217230 BOARD

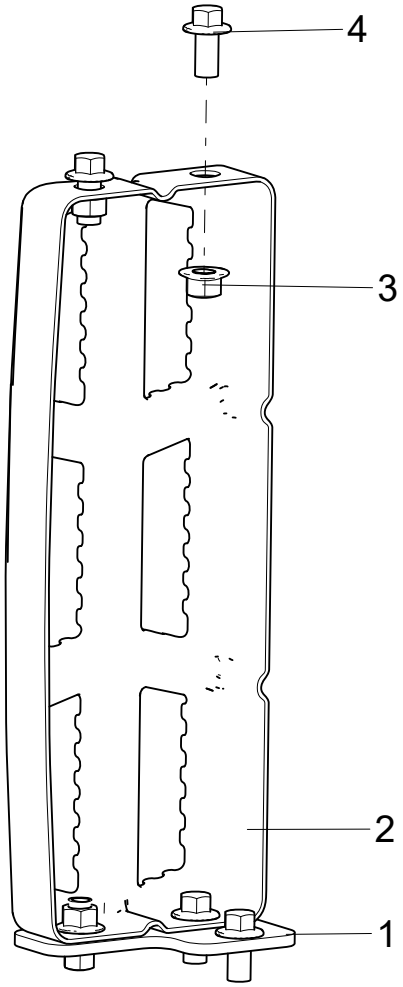

402217230 BOARD

402216339 FUEL TANK ASSY

No.	PART NUMBER	QTY	NAME	NOTE	PAGE
1	**402217229**	1	FOOTSTEP SUPPORT		
2	**252614435**	1	PEDAL		
3	**805238533**	3	NUT 10	GB/T6177.1-2000	
4	**805004770**	5	BOLT M10×20(DACROMET)	GB/T16674.1-2004	

402216343 FUEL CIRCUIT ASSEMBLY

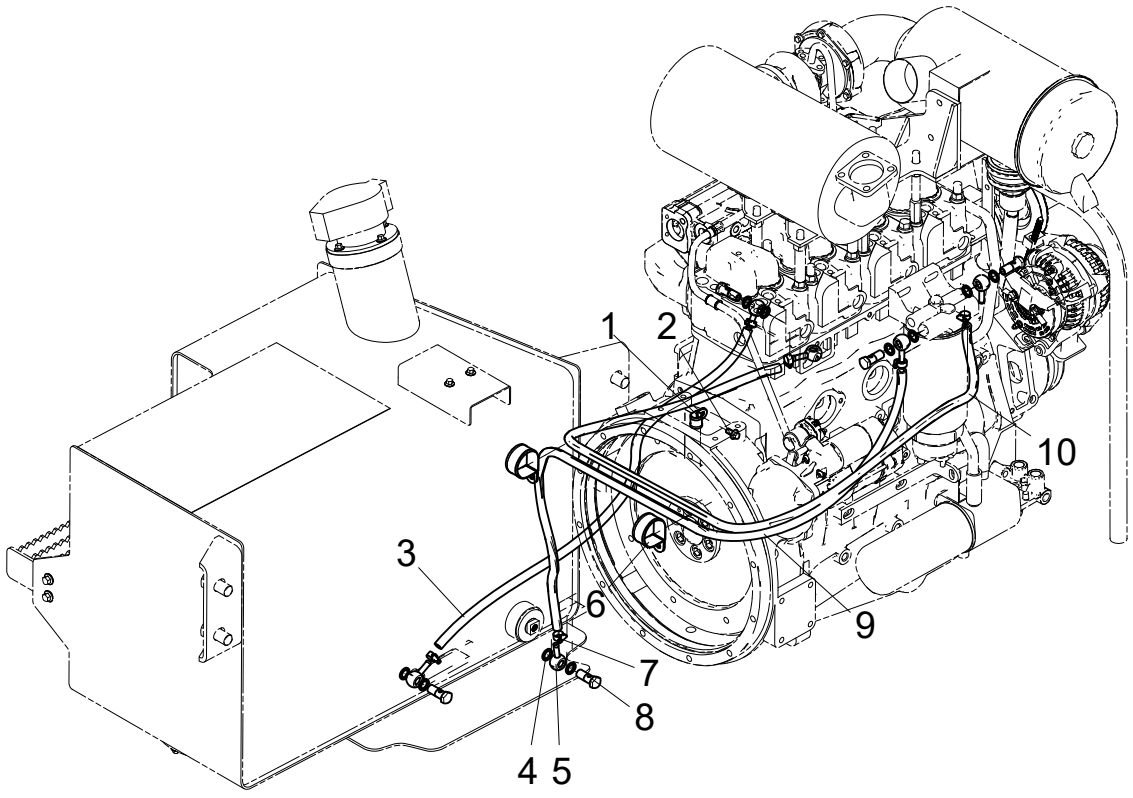

402216343 FUEL CIRCUIT ASSEMBLY

402216341 POWER SYSTEM

No.	PART NUMBER	QTY	NAME	NOTE	PAGE
1	**803199326**	1	CUTTING SLEEVE Φ18	TJBC	
2	**805004755**	1	BOLT M8×16 (DACROMET)	GB/T16674.1-2004	
3	**803427264**	1	HOSE B8×950		
4	**803400968**	10	RING	Q/XGKJ 12045-2014	
5	**401003228**	6	SPLICE		
6	**803300804**	2	FERRULE Φ50-11	TJBC	
7	**859907948**	6	CLAMP	QC/T619-1999	
8	**402100963**	5	BOLT M14×1.5		
9	**813407437**	1	HOSE B8×1620		
10	**803306399**	1	HOSE B8×2000		

402216342 ENGINE ASSY

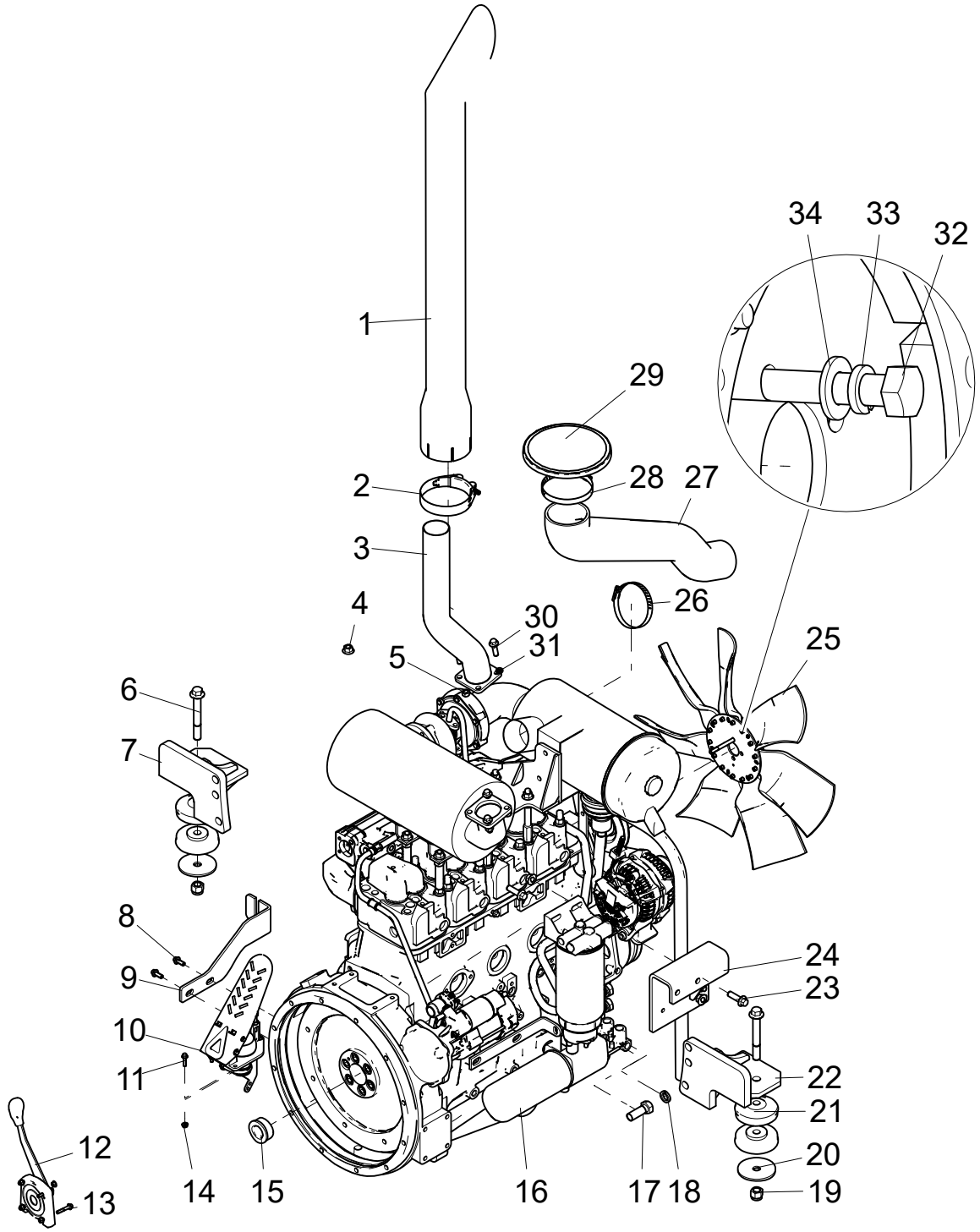

402216342 ENGINE ASSY

402216341 POWER SYSTEM

No.	PART NUMBER	QTY	NAME	NOTE	PAGE
1	**402211252**	1	EXHAUST PIPE		
2	**801979539**	1	STRONG BAND Φ108-115		
3	**402216349**	1	EXHAUST CONNECTING PIPE		
4	**805204006**	9	NUT 12	GB/T6177.1-2000	
5	**805239108**	4	NUT M10 LH	GB/T6170-2000	
6	**805047990**	2	BOLT M16×120	GB/T16674.1-2004	
7	**402216348**	1	ENGINE HARNESS BRACKET-L		
8	**805004756**	5	BOLT M8×20 (DACROMET)	GB/T16674.1-2004	
9	**402400344**	1	ACCELEROGRAPH BRACKET		
10	**800339737**	1	THROTTLE SHAFT		
11	**805047993**	3	BOLT M6×25 (DACROMET)	GB/T16674.1-2004	
12	**800339630**	1	HAND THROTTLE		
13	**805047995**	4	BOLT M6×35	GB/T16674.1-2004	
14	**805135720**	7	NUT M6(DACROMET)	GB/T6177.1-2000	
15	**402211996**	1	REDUCING BUSHING		
16	**800194272**	1	ENGINE		
17	**805047448**	6	BOLT M18×50	GB/T5783-2000	
18	**805338364**	6	WASHER 18	GB/T93-1987	
19	**805200211**	2	NUT M16	GB/T6182-2010	
20	**402212366**	2	RETAINER FLEX-PLATE		
21	**800160761**	4	VIBRATION DAMPER		
22	**402216184**	1	ENGINE HARNESS BRACKET-L		
23	**805048018**	2	BOLT M12×40	GB/T16674.1-2004	
24	**402400269**	1	BRACKET		
25	**800194952**	1	FAN		
26	**801902717**	1	HOSE CLAMP	QC/T619-1999	
27	**402216350**	1	AIR FILTER CONNECTING PIPE		
28	**801902718**	1	THROAT CLAMP B90-114	QC/T619-1999	

402216342 ENGINE ASSY

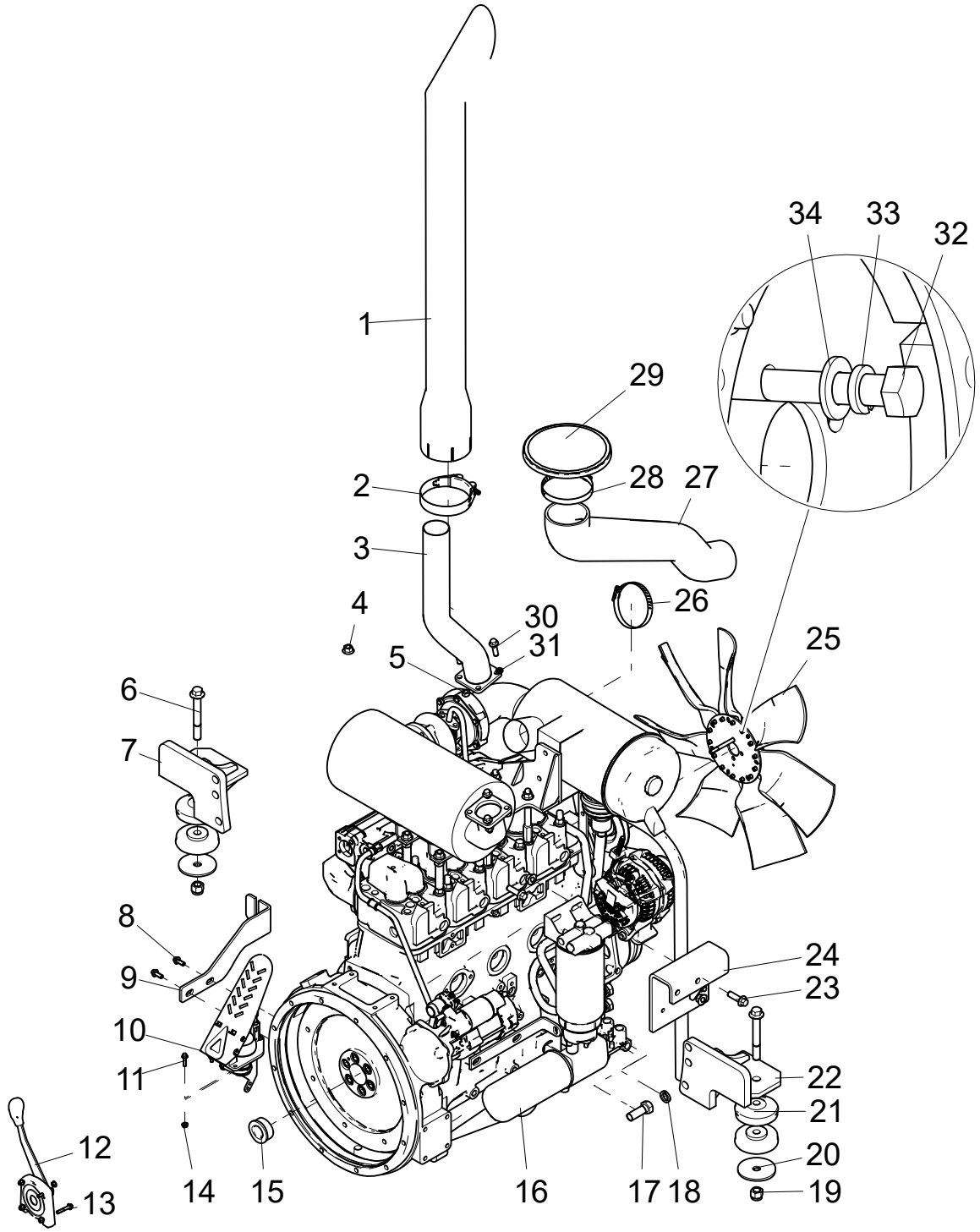

402216342 ENGINE ASSY

402216341 POWER SYSTEM

No.	PART NUMBER	QTY	NAME	NOTE	PAGE
29	**800179169**	1	CAP		
30	**805048007**	4	BOLT M10×35	GB/T16674.1-2004	
31	**805338260**	4	WASHER 10	GB/T93-1987	
32	**805048391**	4	BOLT M8×110	GB/T5782-2000	
33	**805338259**	4	SPRING WASHER 8	GB/T93-1987	
34	**805338276**	4	SPRING WASHER 8	GB/T97.1-2002	

800194272 ENGINE

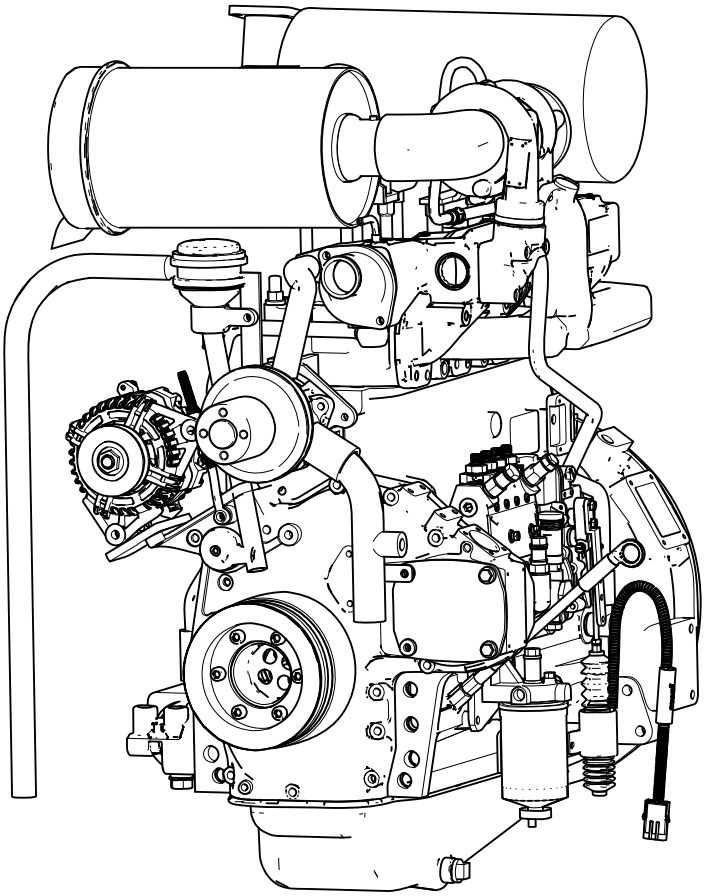

800194272 ENGINE

402216342 ENGINE ASSY

No.	PART NUMBER	QTY	NAME	NOTE	PAGE
1	**860600655**	1	CRANKCASE ASSEMBLY		
2	**860600664**	1	FRONT WALL COVER		
3	**860600669**	1	NOZZLE ASSY		
4	**860600670**	1	OIL-GAS SEPARATOR GROUP		
5	**860600672**	1	HYDRAULIC PUMP GROUP		
6	**860600673**	1	OIL PAN GROUP		
7	**860600679**	1	CRANKSHAFT GROUP		
8	**860600681**	1	COMBINATION GROUP		
9	**860600692**	1	MAIN BEARING GROUP		
10	**860600693**	1	THRUST PLATE ASSY		
11	**860600695**	1	FLYWHEEL GROUP		
12	**860600698**	1	ABSORBER AND RIM		
13	**860600700**	1	CRANKSHAFT PULLEY ASSEMBLY		
14	**860600703**	1	PISTON AND CONNECTING ROD GROUP		
15	**860600709**	1	CYLINDER HEAD SUBASSEMBLY		
16	**860600715**	1	CYLINDER HEAD COVER GROUP		
17	**860145952**	1	CYLINDER HEAD COVER SHIM		
18	**860600716**	1	CAMSHAFT ASSY		
19	**860600721**	1	VALVE TRAIN GROUP		
20	**860600722**	1	OIL PUMP GROUP		
21	**860600724**	1	FILTER ASM		
22	**860600730**	1	COOLER ASM		
23	**860600735**	1	OIL STRAINER GROUP		
24	**860600739**	1	SUPERCHARGER LUBRICATING OIL PIPE		
25	**860600745**	1	FUEL INJECTION PUMP GROUP		
26	**860135426**	1	FUEL INJECTOR		
27	**860600750**	1	LOW PRESSURE FUEL PIPE GROUP		
28	**860600751**	1	FUEL FILTER GROUP		

800194272 ENGINE

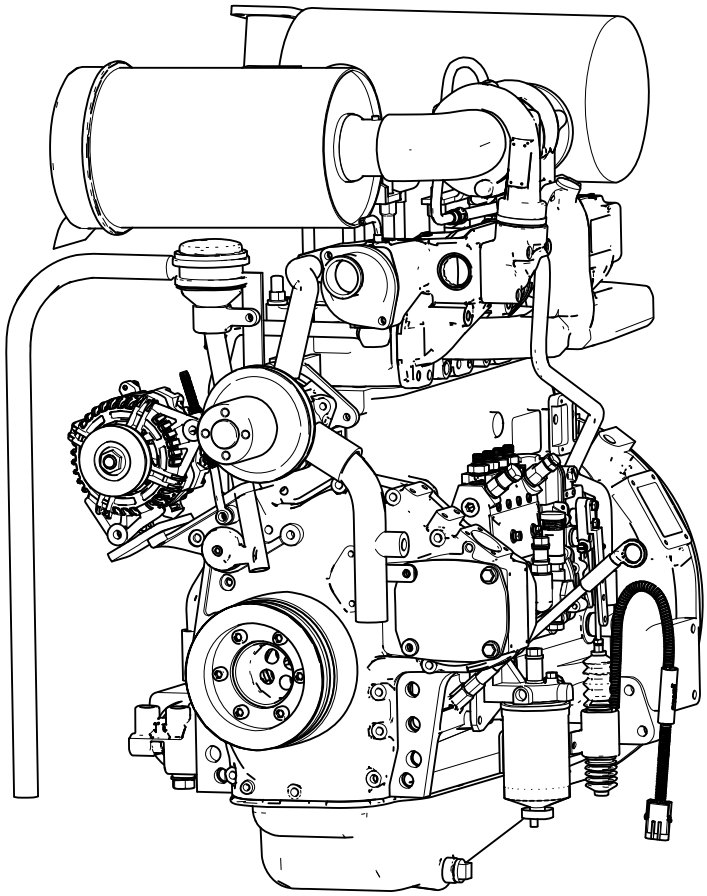

800194272 ENGINE

402216342 ENGINE ASSY

No.	PART NUMBER	QTY	NAME	NOTE	PAGE
29	**860600757**	1	HIGH PRESSURE FUEL PIPE GROUP		
30	**860600759**	1	INTAKE PIPE ASSEMBLY		
31	**860600770**	1	WATER PUMP GROUP		
32	**860600771**	1	FAN CONJUNCTIVE PLATE		
33	**860600776**	1	WATER PUMP PULLEY ASSEMBLY		
34	**860600777**	1	WATER PIPE ASSEMBLY		
35	**860600780**	1	COOLING WATER PIPE		
36	**860600781**	1	EXHAUST MANIFOLD GROUP		
37	**860600784**	1	SILENCER GROUP		
38	**860600785**	1	TURBOCHARGER GROUP		
39	**860600788**	1	GENERATOR BRACKET		
40	**860600792**	1	ALTERNATOR GROUP		
41	**860600793**	1	STARTER MOTOR GROUP		
42	**860600794**	1	FLYWHEEL HOUSING GROUP		
43	**860600798**	1	PARKING ELECTROMAGNET ASSEMBLY		
44	**860600801**	1	PARTS BOX GROUP		
45	**860148923**	1	AIR FILTER ASSEMBLY		

860600655 CRANKCASE ASSEMBLY

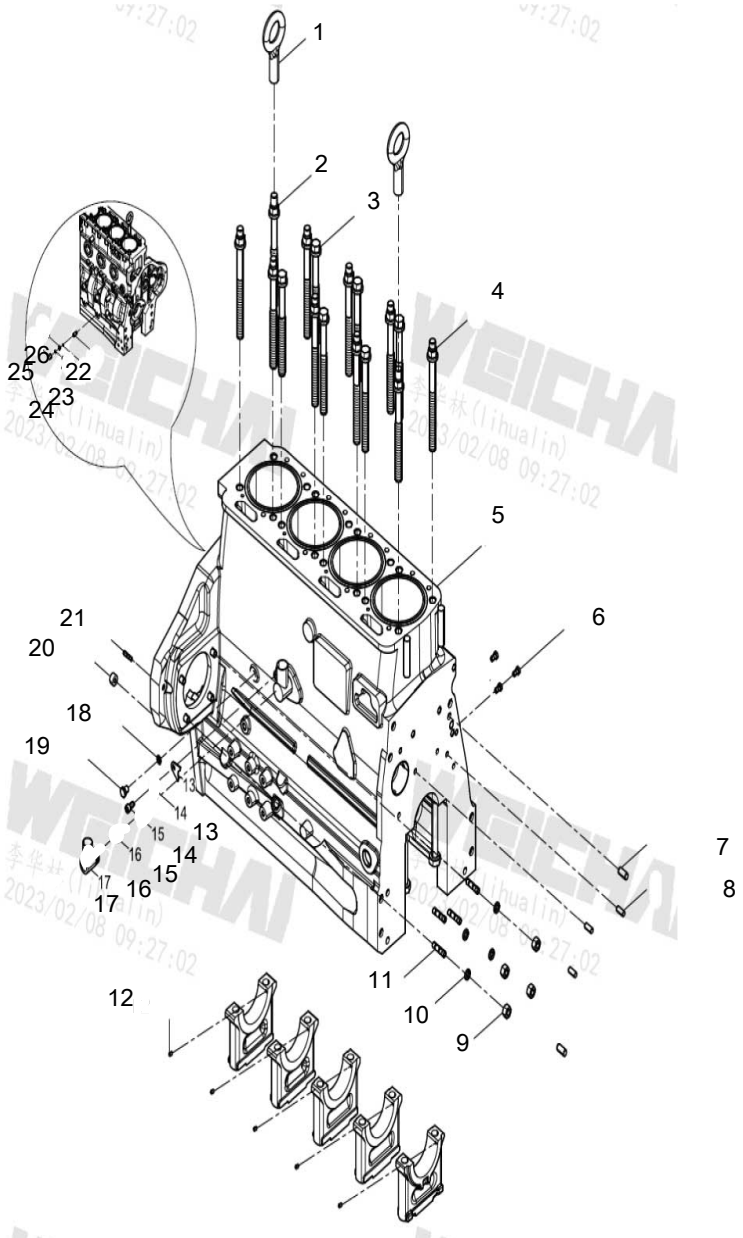

860600655 CRANKCASE ASSEMBLY

800194272 ENGINE

No.	PART NUMBER	QTY	NAME	NOTE	PAGE
1	**860501278**	2	LIFTING EYE BOLT		
2	**860159384**	2	CYLINDER HEAD BOLT		
3	**860131891**	6	CYLINDER HEAD BOLT		
4	**860131892**	8	CYLINDER HEAD BOLT		
5	**860600656**	1	CRANKCASE ASSEMBLY		
6	**860600657**	3	HEXAGON BOLT		
7	**860600658**	2	CYLINDRICAL PIN		
8	**860132243**	3	CYLINDRICAL PIN		
9	**860541894**	4	BOLT		
10	**860137918**	4	FLAT WASHER		
11	**860541890**	4	SCREW		
12	**860131297**	5	SPRING ROUND PIN		
13	**860501286**	1	CHECKING SHEET		
14	**459318788**	1	SPRING WASHER		
15	**860505058**	1	INNER-HEXAGON SCREW		
16	**860131234**	1	O SEAL RING		
17	**860501197**	1	PIPE		
18	**860157616**	1	SAEL RING		
19	**860501222**	1	HEXAGON BOLT		
20	**860505073**	1	LOCATING SLEEVE		
21	**860501250**	1	SCREW		
22	**860505075**	1	DOUBLE-SCREW BOLT		
23	**860505076**	1	STEEL BALL		
24	**860132336**	1	SAEL RING		
25	**860505077**	1	ACORN HEXAGON NUTS		
26	**860505078**	1	SPRING		

860600656 CRANKCASE ASSEMBLY

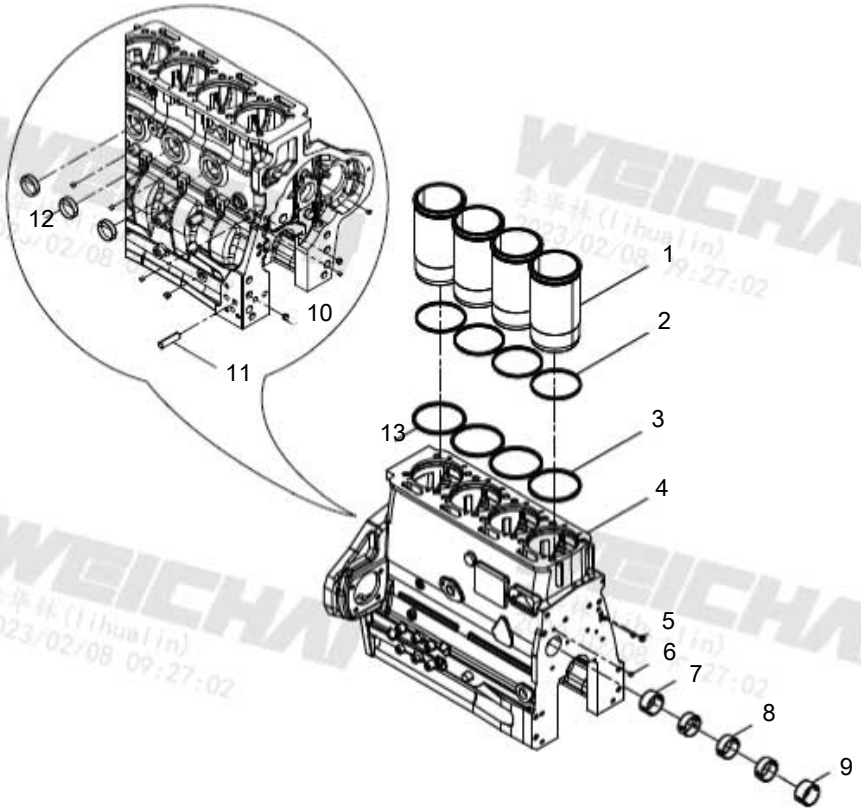

860600656 CRANKCASE ASSEMBLY

860600655 CRANKCASE ASSEMBLY

No.	PART NUMBER	QTY	NAME	NOTE	PAGE
1	**860300398**	4	CYLINDER SLEEVE		
2	**860146980**	8	CYLINDER SLEEVE SEAL RING		
3	**860600659**	4	CYLINDER SLEEVE SEAL RING		
4	**860600660**	1	CRANKCASE PRE-ASSEMBLY		
5	**860501283**	2	PULLING RIVET		
6	**860501282**	7	PULLING RIVET		
7	**860160402**	1	CAMSHAFT BUSHING		
8	**860160403**	3	CAMSHAFT BUSHING		
9	**860160404**	1	CAMSHAFT BUSHING		
10	**860501289**	2	SCREW PLUG		
11	**860505083**	1	LINER TUBE		
12	**860132131**	3	CUP PLUG		
13	**860600661**	4	CYLINDER SLEEVE SEAL RING		

860600660 CRANKCASE PRE-ASSEMBLY

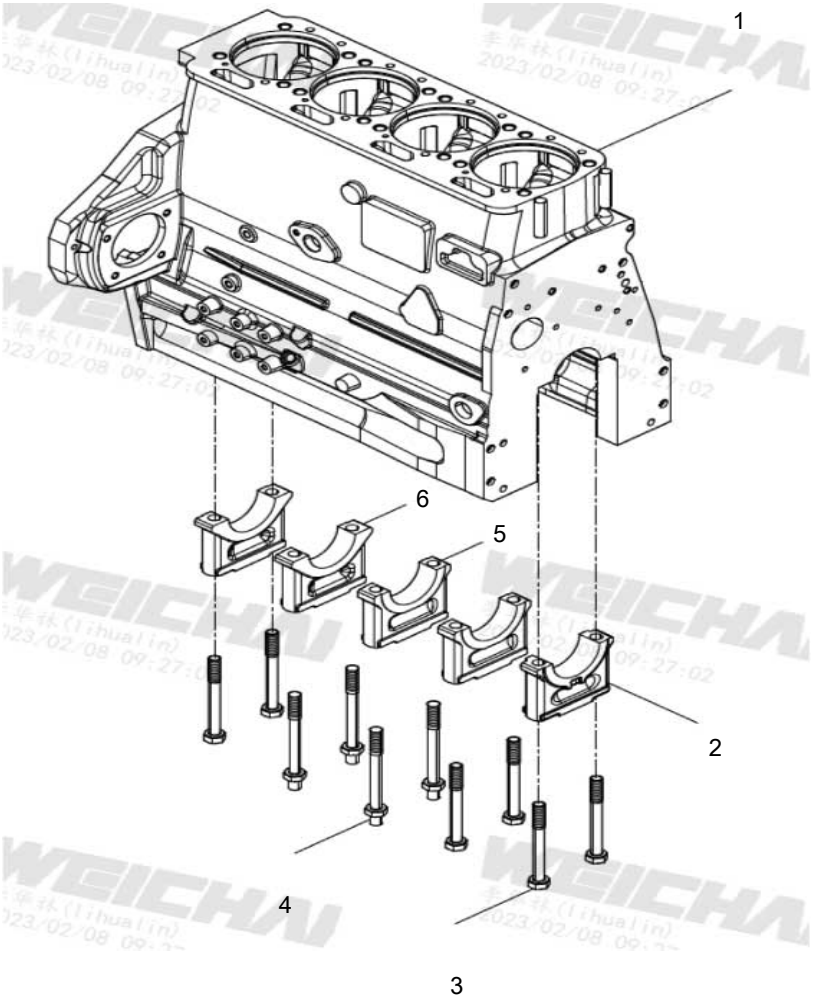

860600660 CRANKCASE PRE-ASSEMBLY

860600656 CRANKCASE ASSEMBLY

No.	PART NUMBER	QTY	NAME	NOTE	PAGE
1	**860600662**	1	ENGINE BLOCK		
2	**860505080**	1	PREPROCESS THRUST MAIN BEARING CAP		
3	**860505079**	8	MAIN BEARING BOLT		
4	**860505082**	2	MAIN BEARING BOLT		
5	**860600663**	2	PREPROCESS MAIN BEARING CAP		
6	**860505081**	2	PREPROCESS MAIN BEARING CAP		

860600664 FRONT WALL COVER

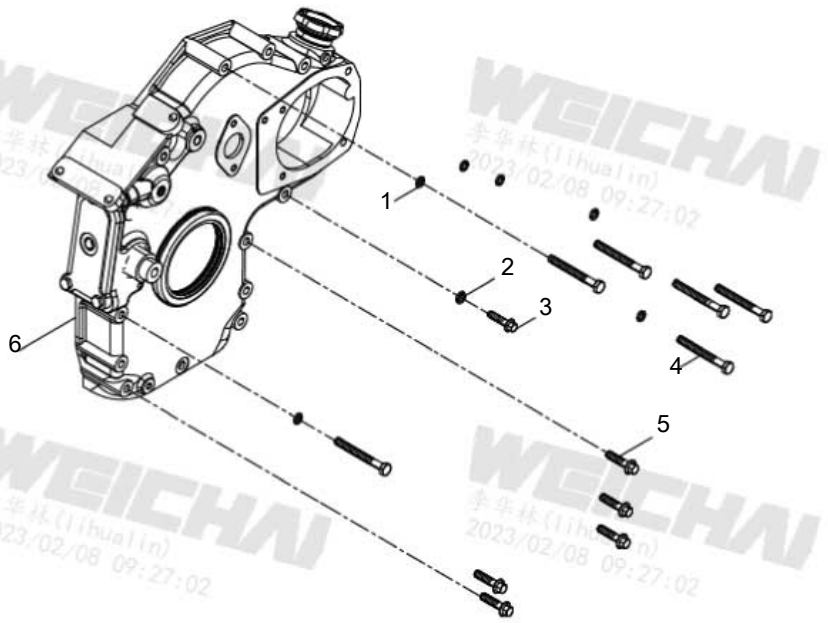

860600664 FRONT WALL COVER

800194272 ENGINE

No.	PART NUMBER	QTY	NAME	NOTE	PAGE
1	**459318788**	6	SPRING WASHER		
2	**860132335**	1	SAEL RING		
3	**860157749**	1	HEXAGON FLANGE BOLT		
4	**860505085**	6	HEXAGON BOLT		
5	**860505086**	5	HEXAGON FLANGE BOLT		
6	**860600665**	1	GEAR END FRONT WALL COVER SUBASSEMBLY		

860600665 GEAR END FRONT WALL COVER SUBASSEMBLY

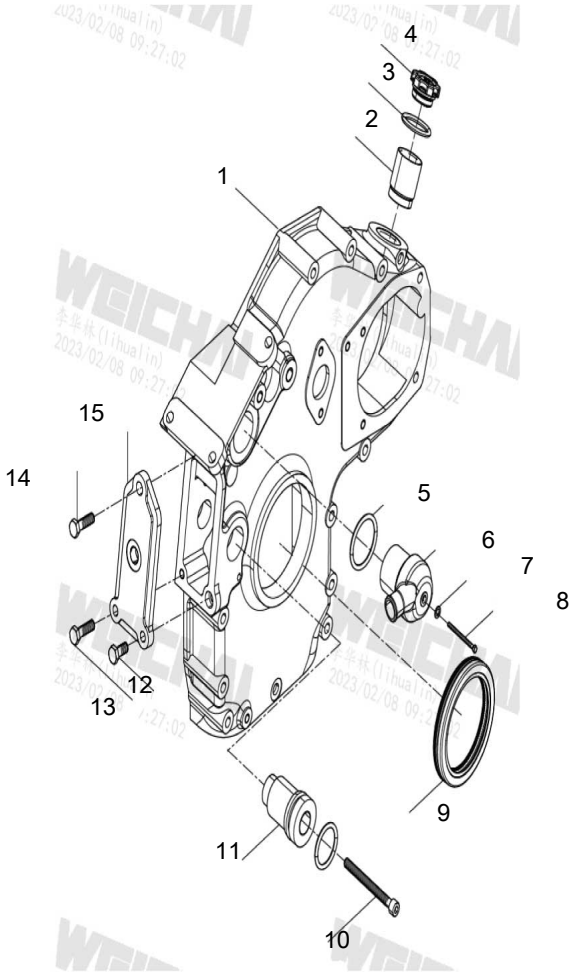

860600665 GEAR END FRONT WALL COVER SUBASSEMBLY

860600664 FRONT WALL COVER

No.	PART NUMBER	QTY	NAME	NOTE	PAGE
1	**860505088**	1	FRONT COVER		
2	**860544693**	1	TYPE FEMAL		
3	**860131239**	2	O SEAL RING		
4	**860505089**	1	FILLER CAP		
5	**860505090**	1	O-SEALING RING		
6	**860131466**	1	AIR BREATHER		
7	**860501220**	1	SEAL WASHER		
8	**860501234**	1	HEXAGON BOLT		
9	**860126390**	1	FRONT OIL SEAL		
10	**860600667**	1	INNER-HEXAGON SCREW		
11	**860505092**	1	AXIS		
12	**860501239**	1	HEXAGON BOLT		
13	**860501237**	1	HEXAGON BOLT		
14	**860544686**	1	HEXAGON BOLT		
15	**860600668**	1	FRONT END COVER PLATE		

860600669 NOZZLE ASSY

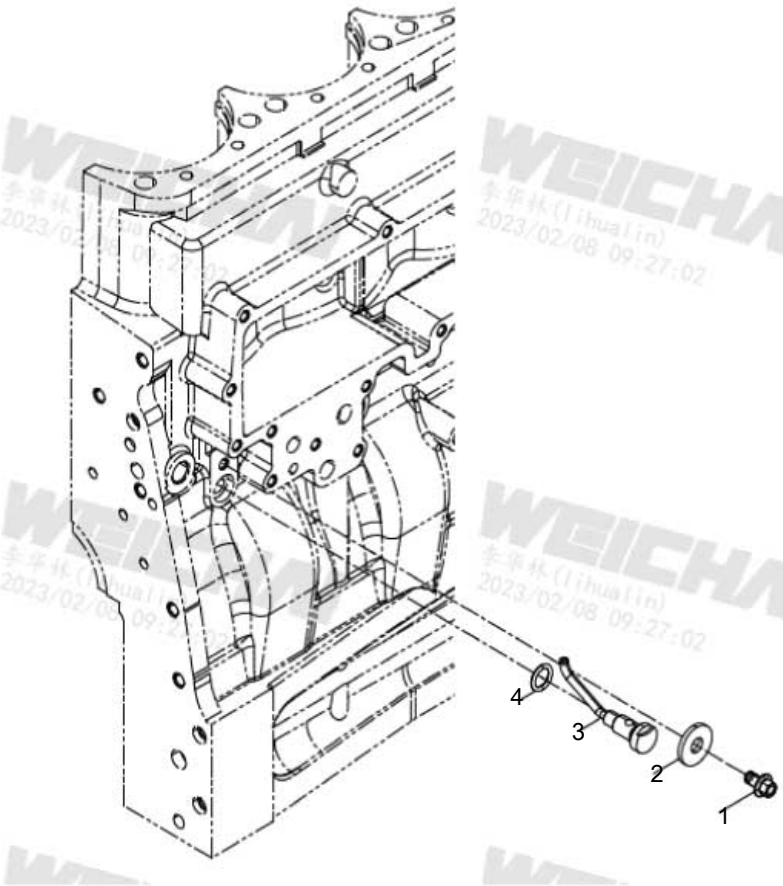

860600669 NOZZLE ASSY

800194272 ENGINE

No.	PART NUMBER	QTY	NAME	NOTE	PAGE
1	**860505094**	1	HEXAGON FLANGE BOLT		
2	**860591575**	1	SPACER		
3	**860165611**	1	PISTON NOZZLE ASSY		
4	**860131237**	1	O SEAL RING		

860600670 OIL-GAS SEPARATOR GROUP

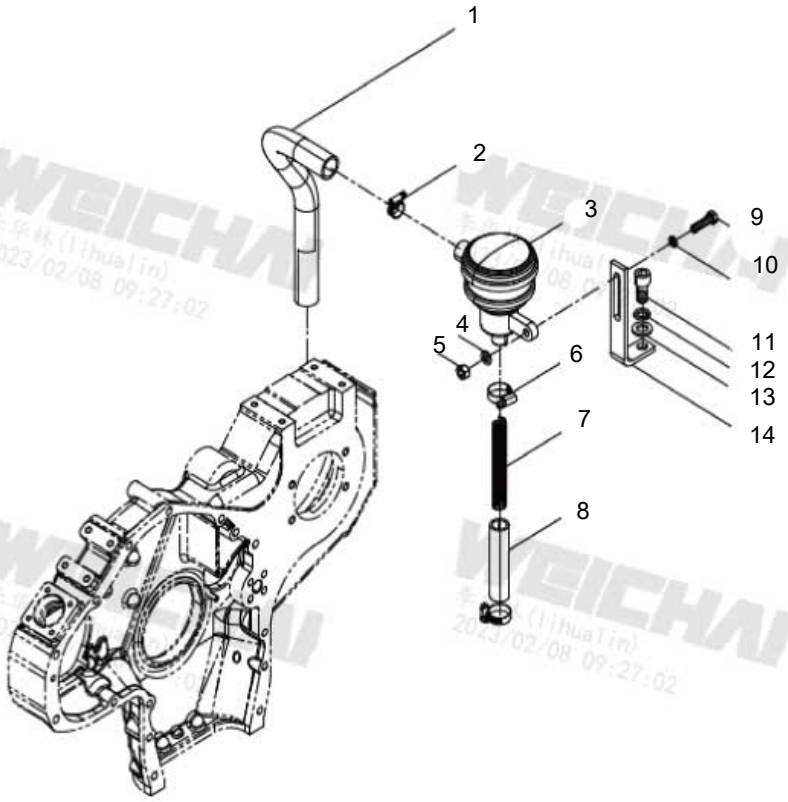

860600670 OIL-GAS SEPARATOR GROUP

800194272 ENGINE

No.	PART NUMBER	QTY	NAME	NOTE	PAGE
1	**860145984**	1	OIL FILTER MOUNTING PLATE		
2	**459317729**	1	HOOP		
3	**800154151**	1	SEPARATOR		
4	**860137609**	1	FLAT WASHER		
5	**860157649**	1	TYPE 2 HEXAGON NUT		
6	**860501254**	2	HOOP		
7	**860501227**	1	SPRING		
8	**860600671**	1	OIL FILTER MOUNTING PLATE		
9	**459317816**	1	HEXAGON BOLT		
10	**459318788**	1	SPRING WASHER		
11	**860501328**	1	INNER-HEXAGON SCREW		
12	**459317904**	1	SPRING WASHER		
13	**860501269**	1	FLAT WASHER		
14	**860513499**	1	BRACKET		

860600672 HYDRAULIC PUMP GROUP

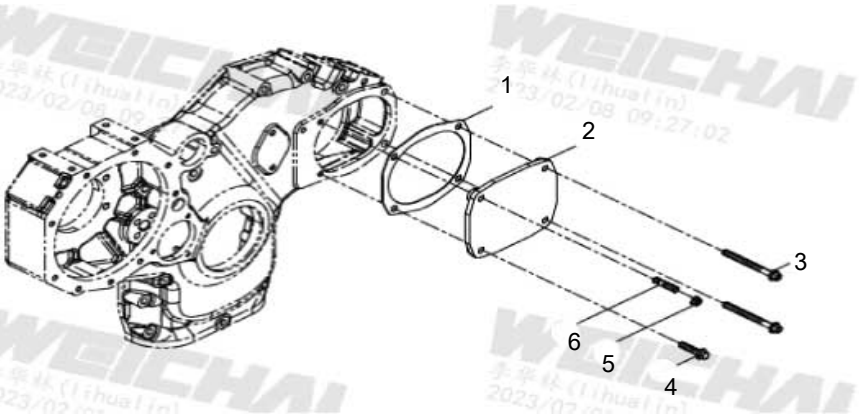

860600672 HYDRAULIC PUMP GROUP

800194272 ENGINE

No.	PART NUMBER	QTY	NAME	NOTE	PAGE
1	**860524269**	1	SPACER		
2	**860505098**	1	PLUG		
3	**860524270**	2	HEXAGON FLANGE BOLT		
4	**860157544**	1	HEXAGON FLANGE BOLT		
5	**860149139**	1	HEXAGON FLANGE NUT		
6	**459333324**	1	DOUBLE HEAD STUD		

860600673 OIL PAN GROUP

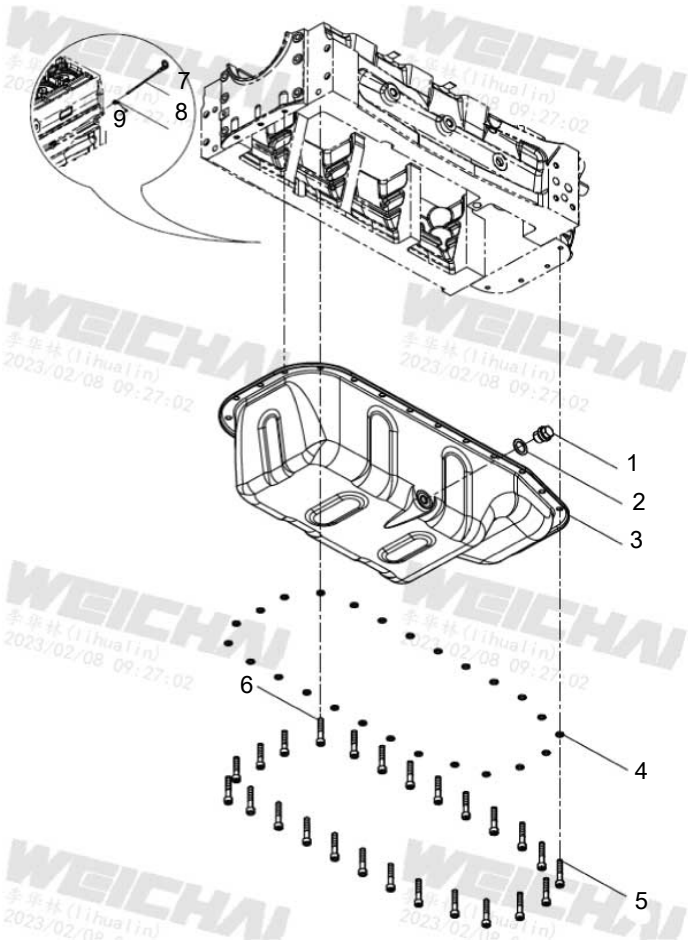

860600673 OIL PAN GROUP

800194272 ENGINE

No.	PART NUMBER	QTY	NAME	NOTE	PAGE
1	**860501231**	1	MAGNETIC SCREW PLUG ASSEMBLY		
2	**860157730**	1	COMPOSE WASHER		
3	**860600674**	1	OIL SUMP ASSEMBLY		
4	**860501359**	25	SPACER		
5	**860501239**	7	HEXAGON BOLT		
6	**860501237**	18	HEXAGON BOLT		
7	**860600675**	1	OIL DIPSTICK ASSY		
8	**459329513**	1	CLAMP ASSEMBLY		
9	**860501352**	1	BOLT		

860600679 CRANKSHAFT GROUP

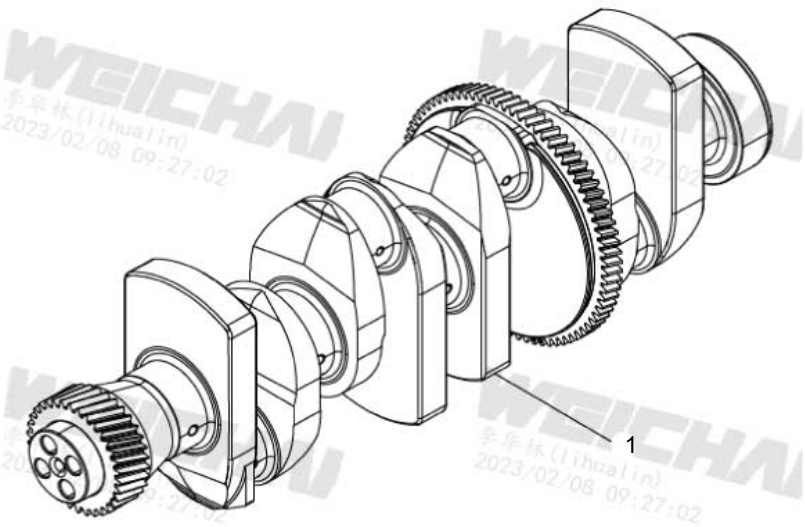

860600679 CRANKSHAFT GROUP

800194272 ENGINE

No.	PART NUMBER	QTY	NAME	NOTE	PAGE
1	**860592847**	1	CRANKSHAFT ASSEMBLY		

860592847 CRANKSHAFT ASSEMBLY

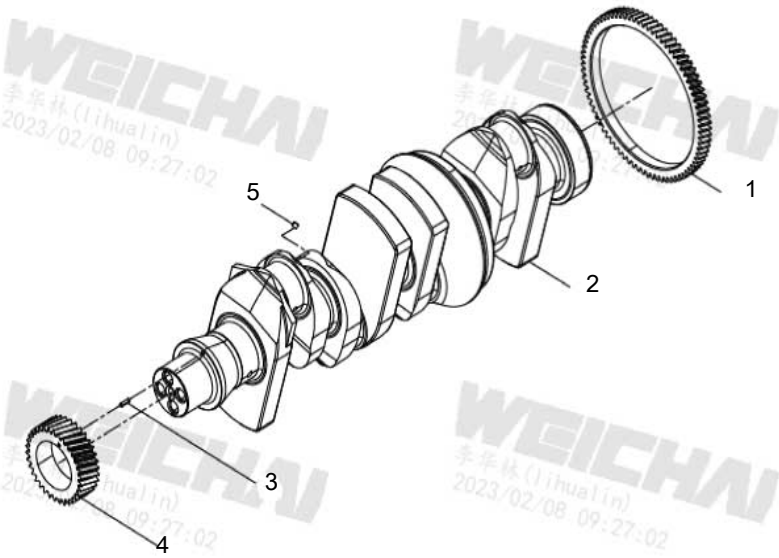

860592847 CRANKSHAFT ASSEMBLY

860600679 CRANKSHAFT GROUP

No.	PART NUMBER	QTY	NAME	NOTE	PAGE
1	**860600680**	1	GEAR RING OF SECOND GRADE BALANCE MECHANISM		
2	**860568531**	1	CRANKSHAFT		
3	**860501265**	1	SPRING-TYPE STRAIGHT PIN, SLOTTED, HEAVY DUTY		
4	**860131943**	1	CRANKSHAFT TIMING GEAR		
5	**860501303**	4	PLUG		

860600681 COMBINATION GROUP

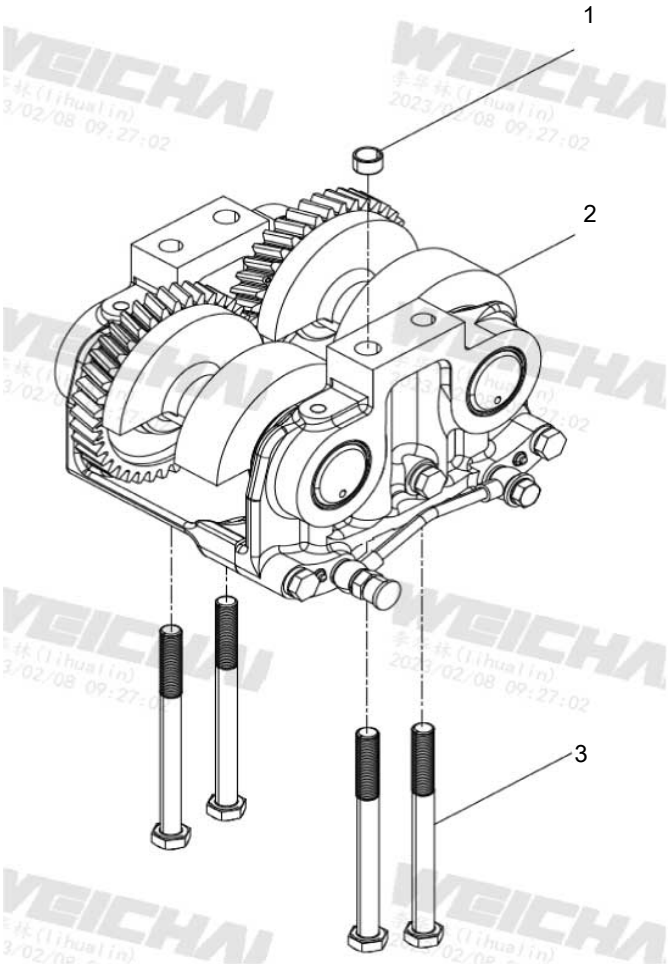

860600681 COMBINATION GROUP

800194272 ENGINE

No.	PART NUMBER	QTY	NAME	NOTE	PAGE
1	**860566032**	1	LOCATING SLEEVE		
2	**860600682**	1	SECOND GRADE BALANCE MECHANISM		
3	**860566053**	1	HEXAGON BOLT		

860600682 SECOND GRADE BALANCE MECHANISM

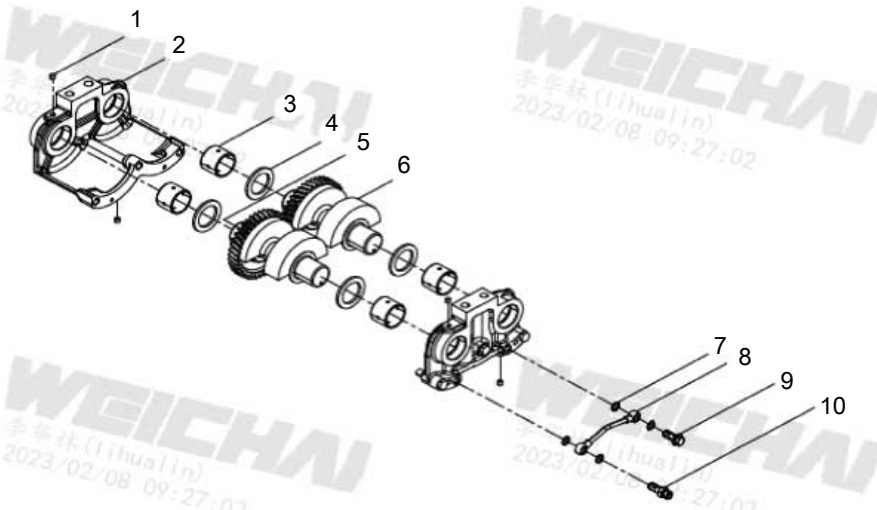

860600682 SECOND GRADE BALANCE MECHANISM

860600681 COMBINATION GROUP

No.	PART NUMBER	QTY	NAME	NOTE	PAGE
1	**860600683**	4	PLUG		
2	**860600684**	1	BALANCE SHAFT BASE ASSEMBLY		
3	**860566042**	4	BEARING BUSH		
4	**860566059**	4	BALANCE THRUST PLATE		
5	**860566044**	1	DRIVEN SHAFT ASSY		
6	**860600685**	1	DRIVE SHAFT ASSY		
7	**860600686**	4	SEAL WASHER		
8	**860566046**	1	LUBRICATION OIL PIPE FOR GEAR		
9	**860131619**	1	BOLT		
10	**860566045**	1	SPLICE		

860600684 BALANCE SHAFT BASE ASSEMBLY

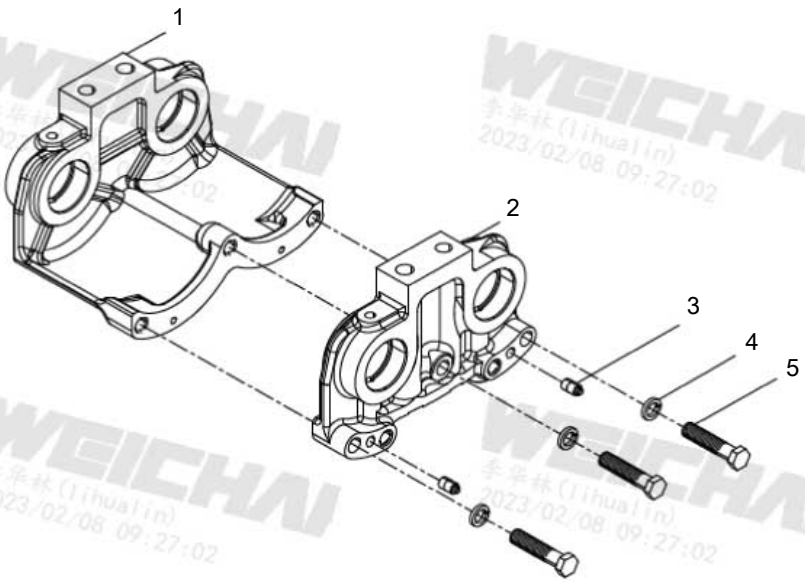

860600684 BALANCE SHAFT BASE ASSEMBLY

860600682 SECOND GRADE BALANCE MECHANISM

No.	PART NUMBER	QTY	NAME	NOTE	PAGE
1	**860600690**	3	SECONDARY BALANCE MECHANISM HOUSING		
2	**860600691**	3	SECONDARY BALANCE MECHANISM COVER		
3	**860566047**	2	TAPER PIN		
4	**459317726**	1	SPRING WASHER		
5	**860505121**	1	HEXAGON BOLT		

860566044 DRIVEN SHAFT ASSY

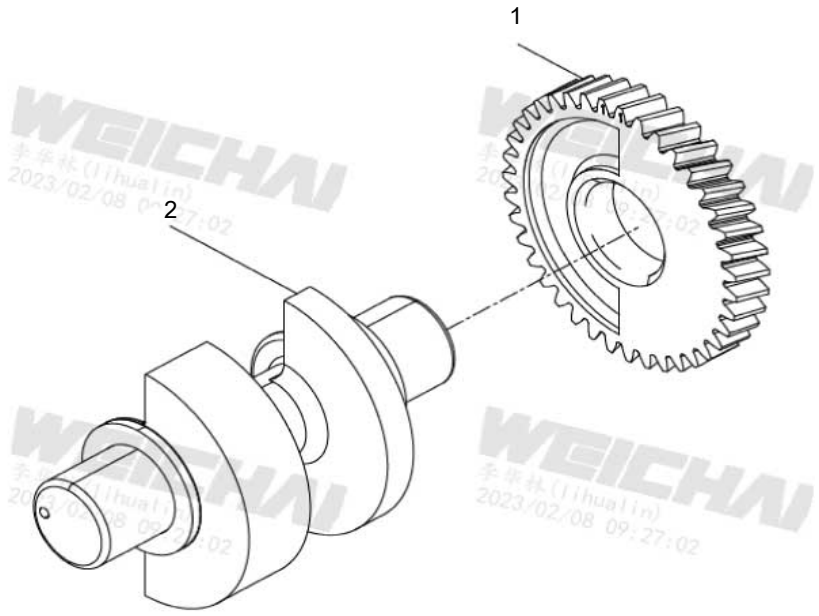

860566044 DRIVEN SHAFT ASSY

860600682 SECOND GRADE BALANCE MECHANISM

No.	PART NUMBER	QTY	NAME	NOTE	PAGE
1	**860600689**	1	SECONDARY BALANCE MECHANISM DRIVEN GEAR		
2	**860600688**	1	SECONDARY BALANCE MECHANISM SHAFT		

860600685 DRIVE SHAFT ASSY

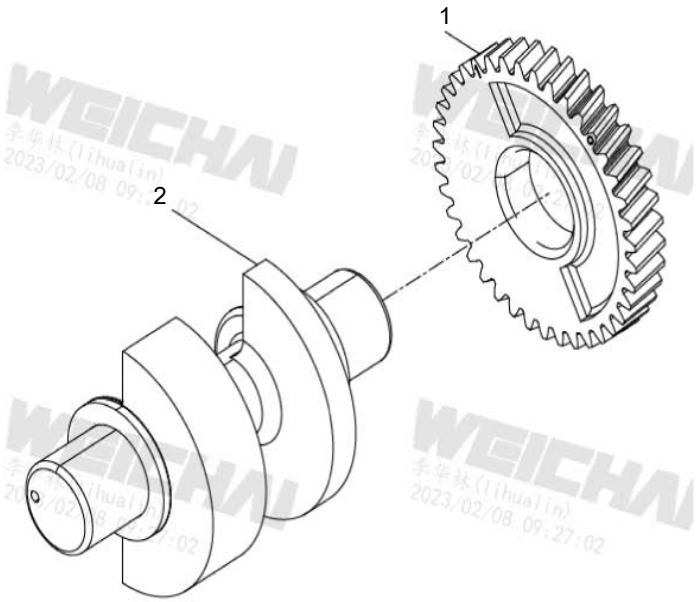

860600685 DRIVE SHAFT ASSY

860600682 SECOND GRADE BALANCE MECHANISM

No.	PART NUMBER	QTY	NAME	NOTE	PAGE
1	**860600687**	1	SECONDARY BALANCE MECHANISM DRIVE GEAR		
2	**860600688**	1	SECONDARY BALANCE MECHANISM SHAFT		

860600692 MAIN BEARING GROUP

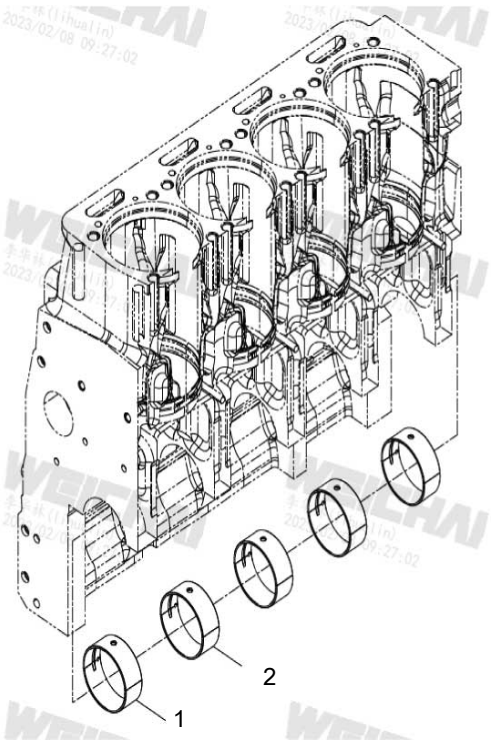

860600692 MAIN BEARING GROUP

800194272 ENGINE

No.	PART NUMBER	QTY	NAME	NOTE	PAGE
1	**803548120**	1	THRUST MAIN BUSHING ASSY		
2	**803548119**	1	ATTACHMENT NAMEPLATE		

803548120 THRUST MAIN BUSHING ASSY

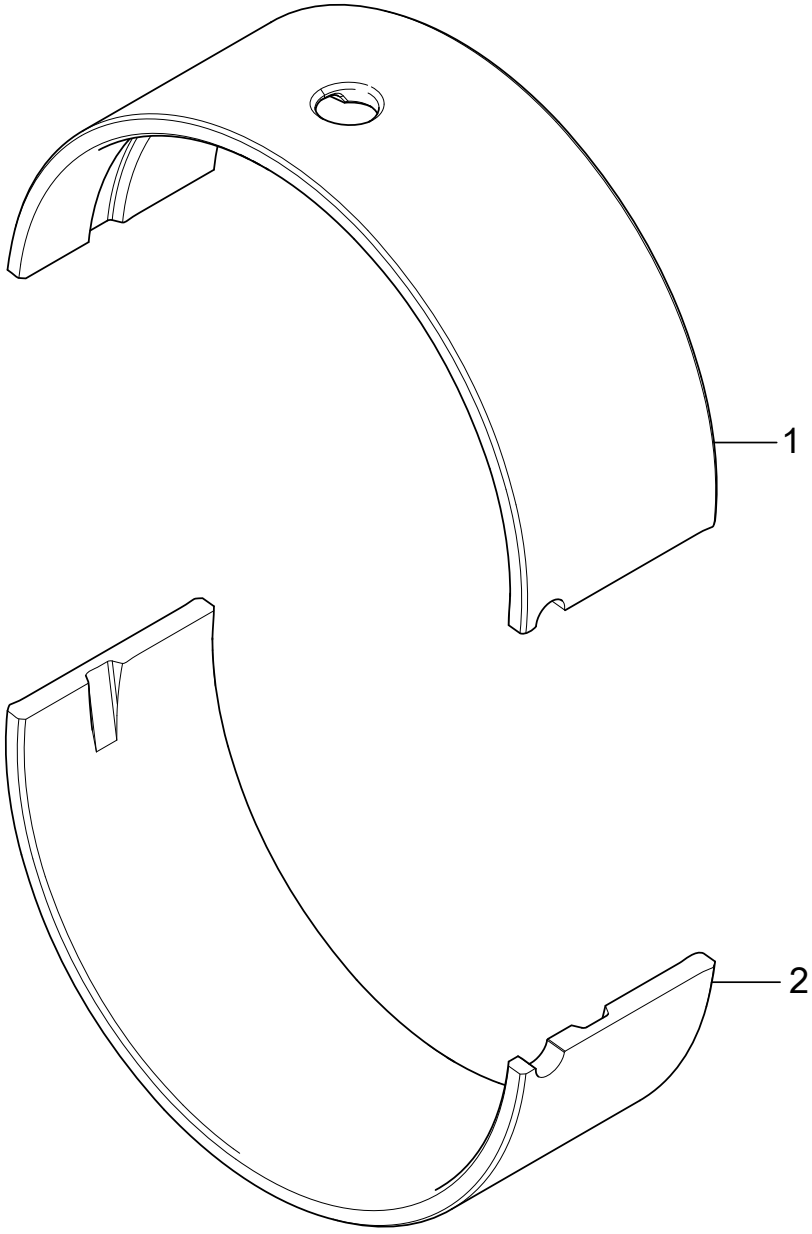

803548120 THRUST MAIN BUSHING ASSY

860600692 MAIN BEARING GROUP

No.	PART NUMBER	QTY	NAME	NOTE	PAGE
1	**860132296**	1	THRUST BEARING UPPER SHELL		
2	**860132297**	1	THRUST BEARING LOWER SHELL		

803548119 ATTACHMENT NAMEPLATE

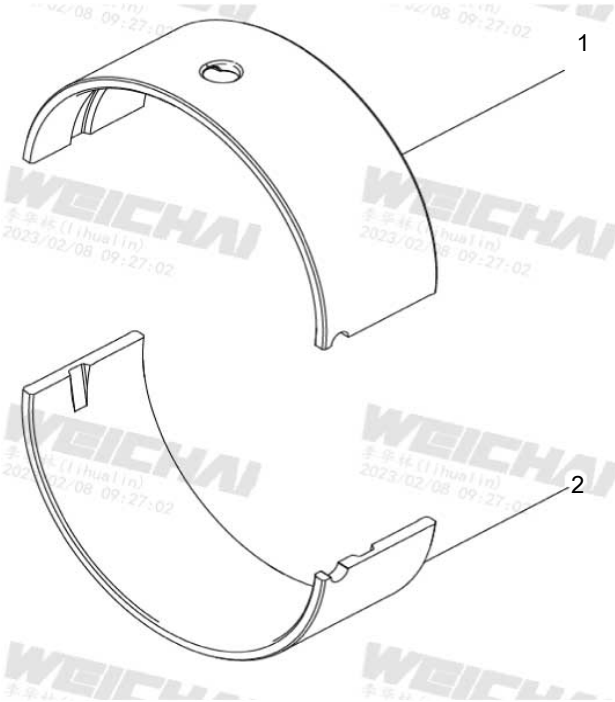

803548119 ATTACHMENT NAMEPLATE

860600692 MAIN BEARING GROUP

No.	PART NUMBER	QTY	NAME	NOTE	PAGE
1	**860135276**	1	ATTACHMENT NAMEPLATE		
2	**860129158**	1	MAIN BUSHING GROUP I		

860600693 THRUST PLATE ASSY

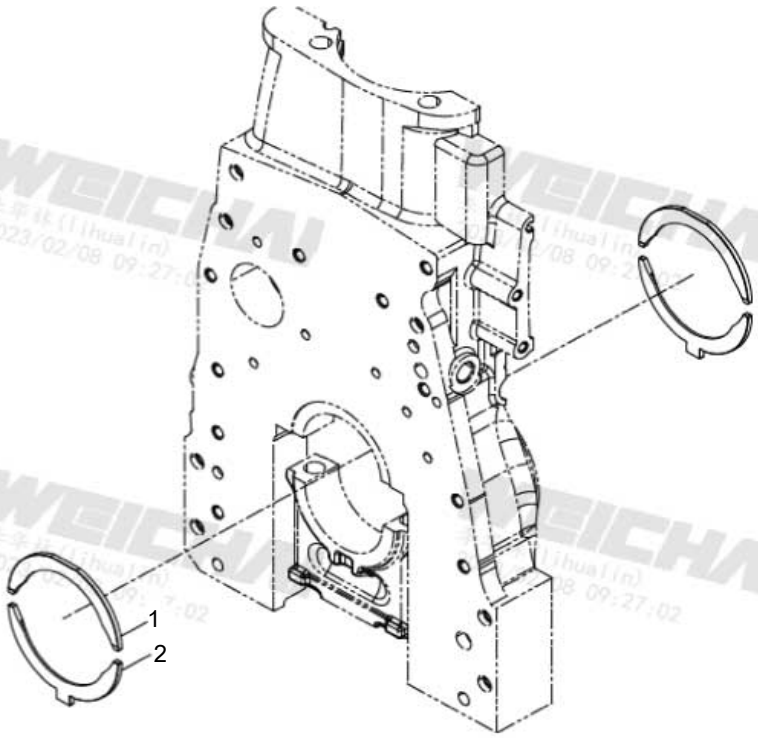

860600693 THRUST PLATE ASSY

800194272 ENGINE

No.	PART NUMBER	QTY	NAME	NOTE	PAGE
1	**860129873**	1	UPPER THRUST PLATE		
2	**860600694**	1	LOWER THRUST PLATE		

860600695 FLYWHEEL GROUP

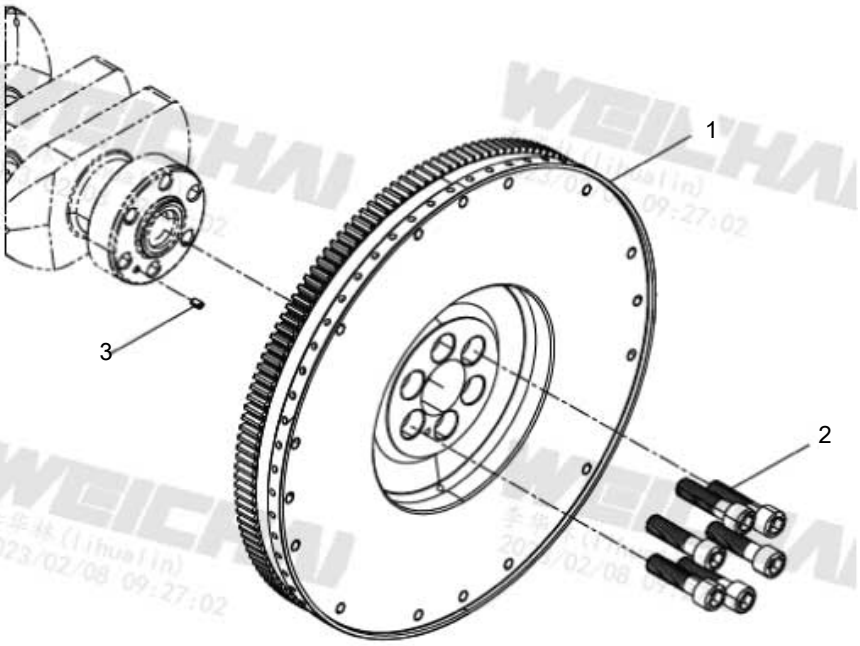

860600695 FLYWHEEL GROUP

800194272 ENGINE

No.	PART NUMBER	QTY	NAME	NOTE	PAGE
1	**860600696**	1	FLYWHEEL ASSEMBLY		
2	**860168073**	6	INNER-HEXAGON SCREW		
3	**860501266**	1	SPRING ROUND PIN		

860600696 FLYWHEEL ASSEMBLY

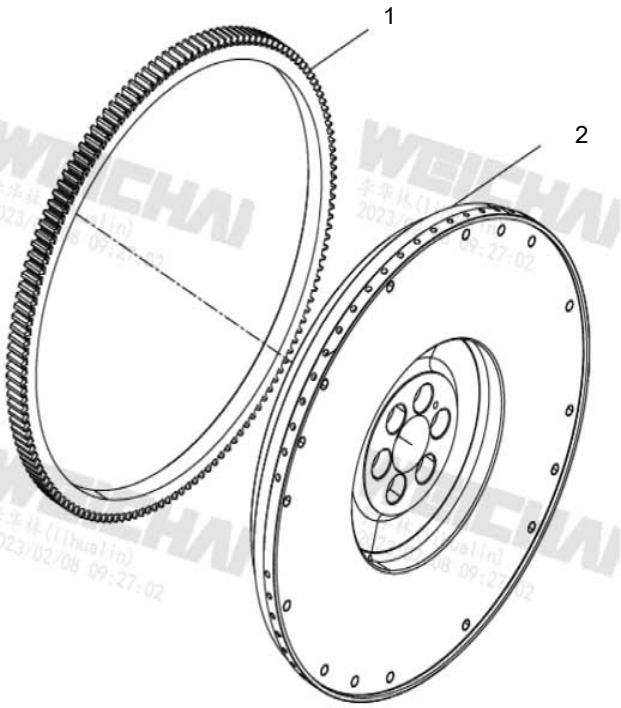

860600696 FLYWHEEL ASSEMBLY

860600695 FLYWHEEL GROUP

No.	PART NUMBER	QTY	NAME	NOTE	PAGE
1	**860131265**	1	FLYWHEEL RING GEAR		
2	**860600697**	1	FLYWHEEL		

860600698 ABSORBER AND RIM

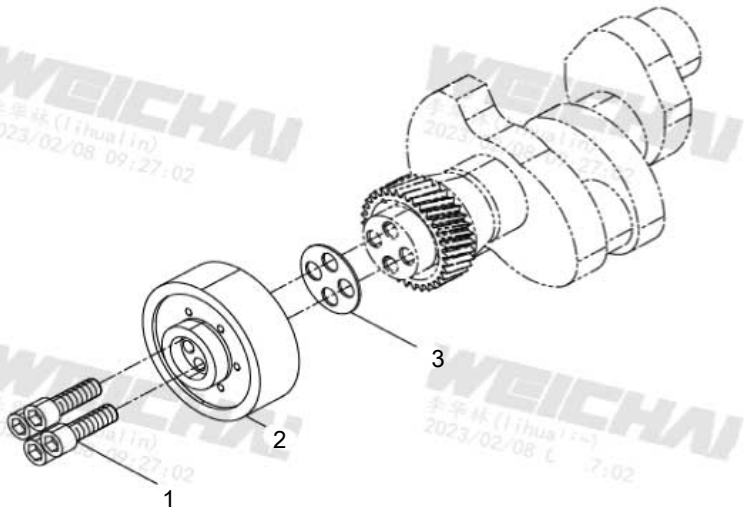

860600698 ABSORBER AND RIM

800194272 ENGINE

No.	PART NUMBER	QTY	NAME	NOTE	PAGE
1	**860501307**	4	SPACER		
2	**860600699**	1	WHEEL HUB		
3	**860501260**	1	INNER-HEXAGON SCREW		

860600700 CRANKSHAFT PULLEY ASSEMBLY

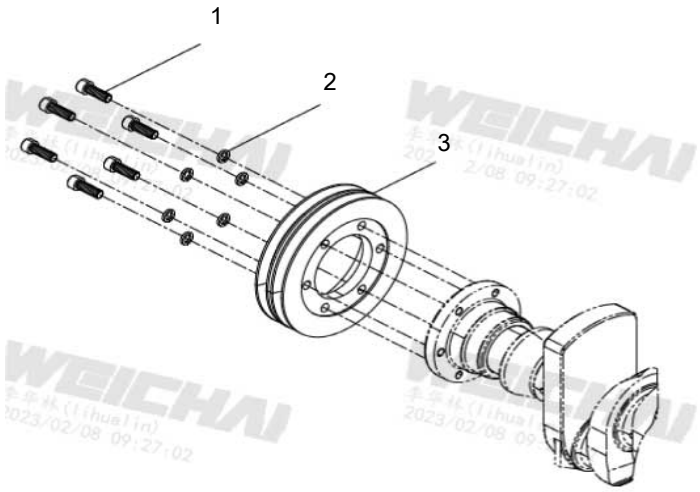

860600700 CRANKSHAFT PULLEY ASSEMBLY

800194272 ENGINE

No.	PART NUMBER	QTY	NAME	NOTE	PAGE
1	**860600701**	6	INNER-HEXAGON SCREW		
2	**459317726**	6	SPRING WASHER		
3	**860600702**	1	CRANKSHAFT PULLEY		

860600703 PISTON AND CONNECTING ROD GROUP

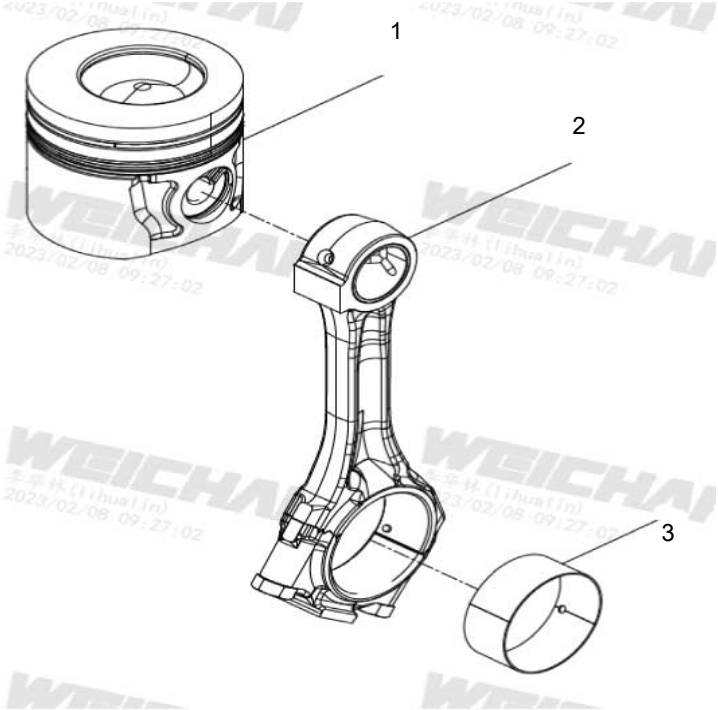

860600703 PISTON AND CONNECTING ROD GROUP

800194272 ENGINE

No.	PART NUMBER	QTY	NAME	NOTE	PAGE
1	**860588424**	1	PISTON ASSY		
2	**860160412**	4	ROD ASM		
3	**860505104**	4	CONNECTING ROD BUSHING SUBASSEMBLY		

860588424 PISTON ASSY

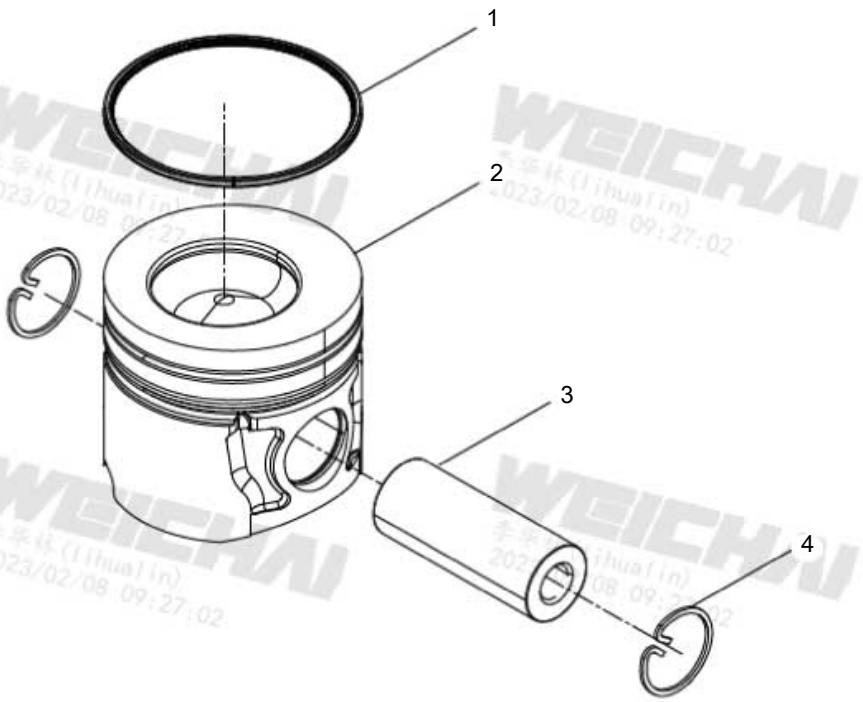

860588424 PISTON ASSY

860600703 PISTON AND CONNECTING ROD GROUP

No.	PART NUMBER	QTY	NAME	NOTE	PAGE
1	**860600704**	4	PISTON RING ASSY		
2	**860600705**	1	PISTON ASSY		
3	**860531063**	4	PISTON PIN		
4	**860131296**	8	ELASTICITY RETAINER RING		

860160412 ROD ASM

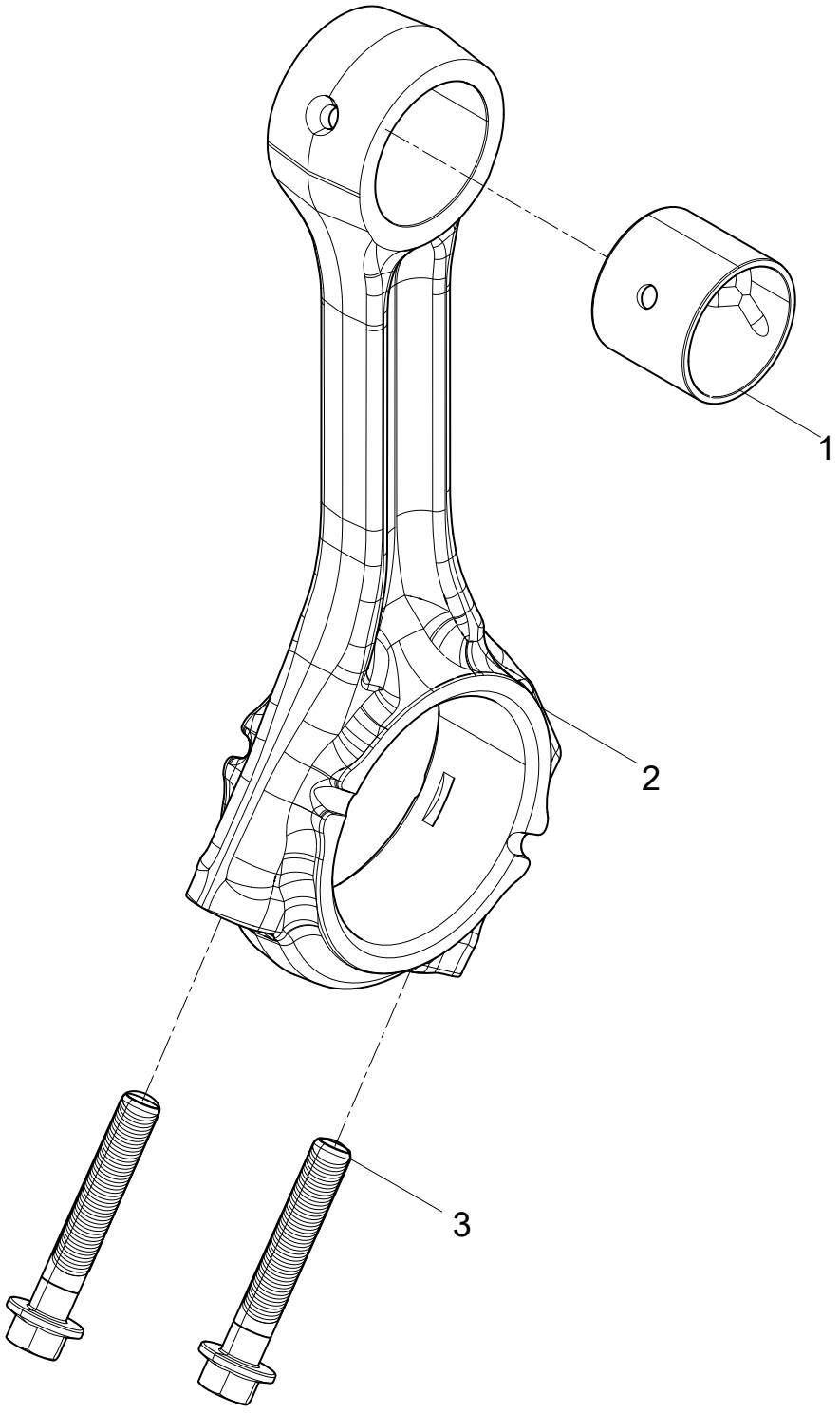

860160412 ROD ASM

860600703 PISTON AND CONNECTING ROD GROUP

No.	PART NUMBER	QTY	NAME	NOTE	PAGE
1	**860139918**	1	CONNECTING ROD BUSHING		
2	**860505108**	1	CONNECTING ROND		
3	**860505109**	2	CONNECTING ROD BOLT		

860600709 CYLINDER HEAD SUBASSEMBLY

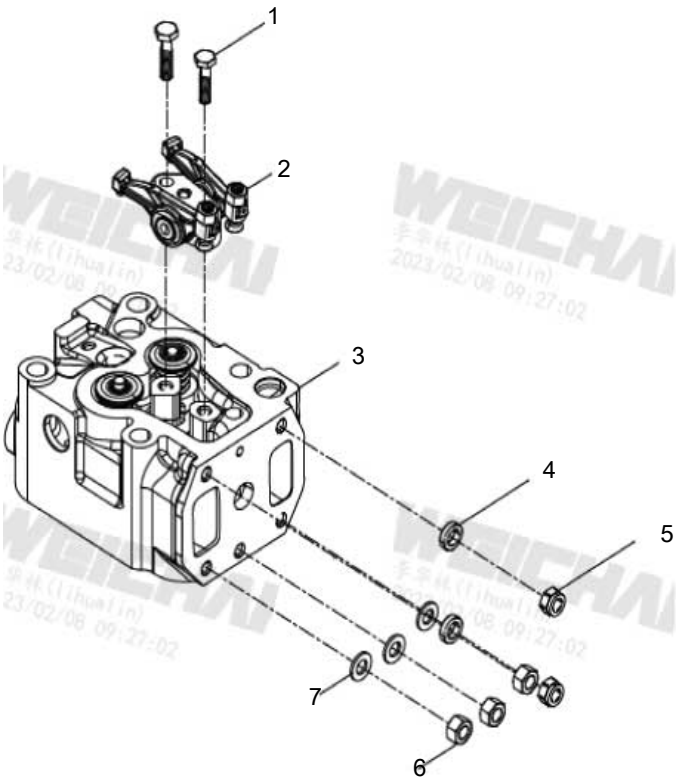

860600709 CYLINDER HEAD SUBASSEMBLY

800194272 ENGINE

No.	PART NUMBER	QTY	NAME	NOTE	PAGE
1	**459400858**	2	HEXAGON BOLT		
2	**860300425**	1	ROCKER ARM BRACKET ASSEMBLY		
3	**860600710**	1	CYLINDER HEAD		
4	**860501311**	3	SPACER		
5	**860541901**	2	BOLT		
6	**860501310**	3	BOLT		
7	**860501309**	2	SPACER		

860300425 ROCKER ARM BRACKET ASSEMBLY

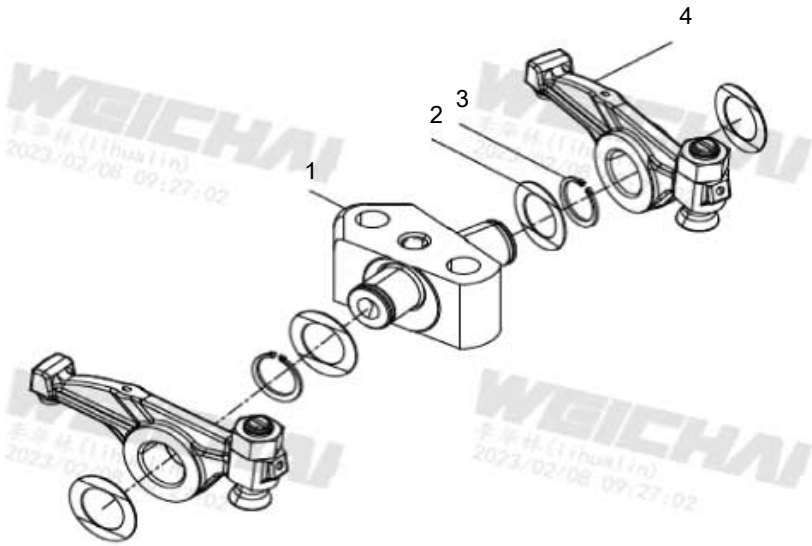

860300425 ROCKER ARM BRACKET ASSEMBLY

860600709 CYLINDER HEAD SUBASSEMBLY

No.	PART NUMBER	QTY	NAME	NOTE	PAGE
1	**860600714**	1	ROCKER ARM SEAT		
2	**860131352**	4	SPRING WASHER		
3	**860501272**	2	RETAINING RINGS FOR SHAFT		
4	**860501171**	2	ROCKER ARM ASSY		

860501171 ROCKER ARM ASSY

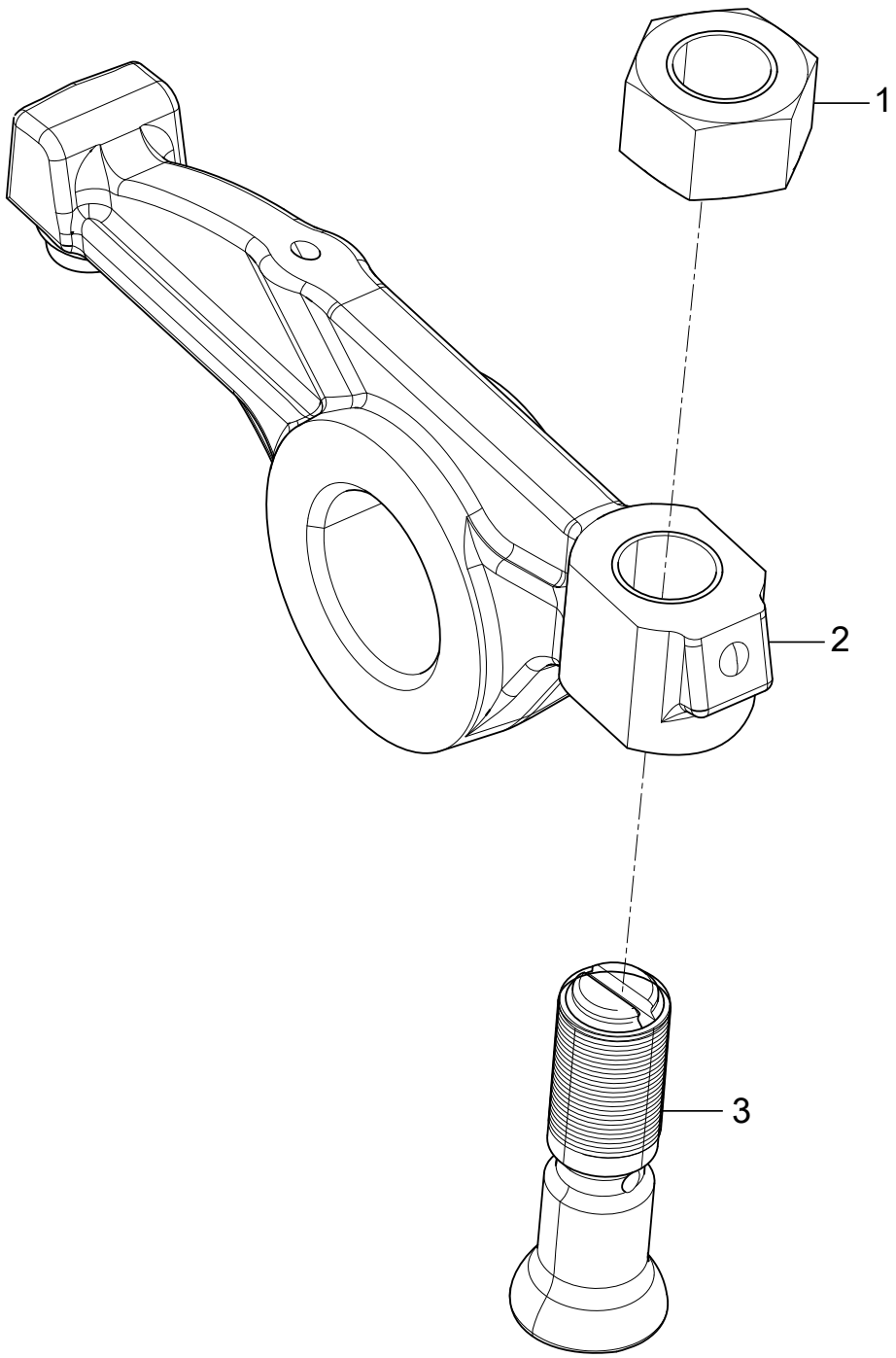

860501171 ROCKER ARM ASSY

860300425 ROCKER ARM BRACKET ASSEMBLY

No.	PART NUMBER	QTY	NAME	NOTE	PAGE
1	**860131688**	2	BOLT		
2	**860130704**	2	ROCKER ARM		
3	**860131348**	2	ADJUSTMENT SCREW		

860600710 CYLINDER HEAD

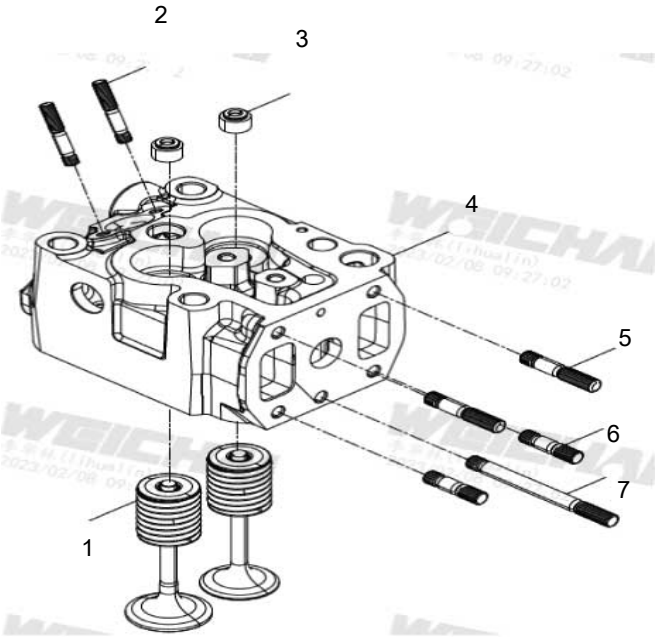

860600710 CYLINDER HEAD

860600709 CYLINDER HEAD SUBASSEMBLY

No.	PART NUMBER	QTY	NAME	NOTE	PAGE
1	**860501174**	1	INTAKE AND EXHAUST VALVE SUBASSEMBLY		
2	**860168047**	2	SCREW		
3	**860300395**	2	VALVE STEM SEALING SLEEVE		
4	**860505251**	1	CYLINDER HEAD SUBASSEMBLY		
5	**860501308**	2	SCREW		
6	**860524279**	2	SCREW		
7	**860524280**	1	SCREW		

860501174 INTAKE AND EXHAUST VALVE SUBASSEMBLY

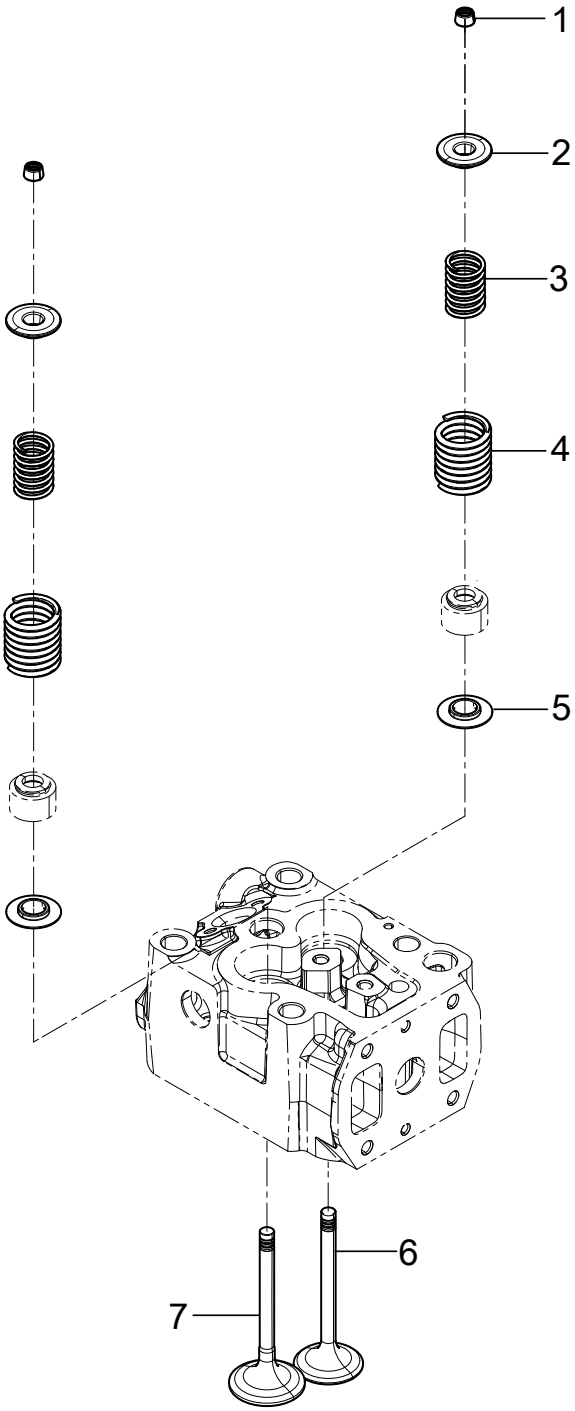

860501174 INTAKE AND EXHAUST VALVE SUBASSEMBLY

860600710 CYLINDER HEAD

No.	PART NUMBER	QTY	NAME	NOTE	PAGE
1	**860131923**	4	VALVE COLLET		
2	**860131917**	2	VALVE SPRING SEAT		
3	**860131911**	2	VALVE SPRING		
4	**860131912**	2	VALVE SPRING		
5	**860139919**	2	VALVE SPRING LOWER SEAT		
6	**860131821**	1	VALVE		
7	**860131583**	1	INTAKE VALVE		

860600715 CYLINDER HEAD COVER GROUP

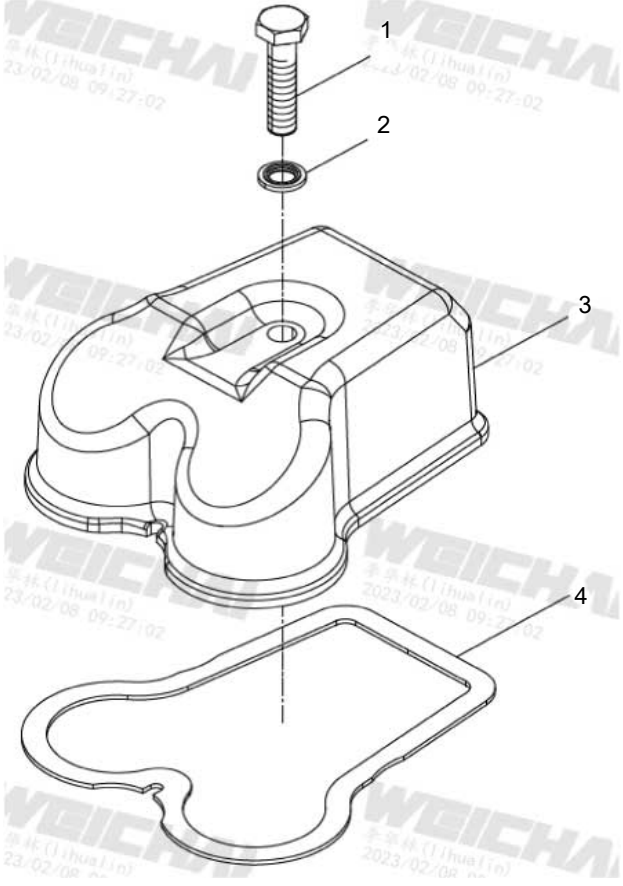

860600715 CYLINDER HEAD COVER GROUP

800194272 ENGINE

No.	PART NUMBER	QTY	NAME	NOTE	PAGE
1	**459318148**	1	HEXAGON BOLT		
2	**459325669**	1	WASHER		
3	**860131897**	1	CYLINDER HEAD COVER		
4	**860145952**	1	CYLINDER HEAD COVER SHIM		

860600716 CAMSHAFT ASSY

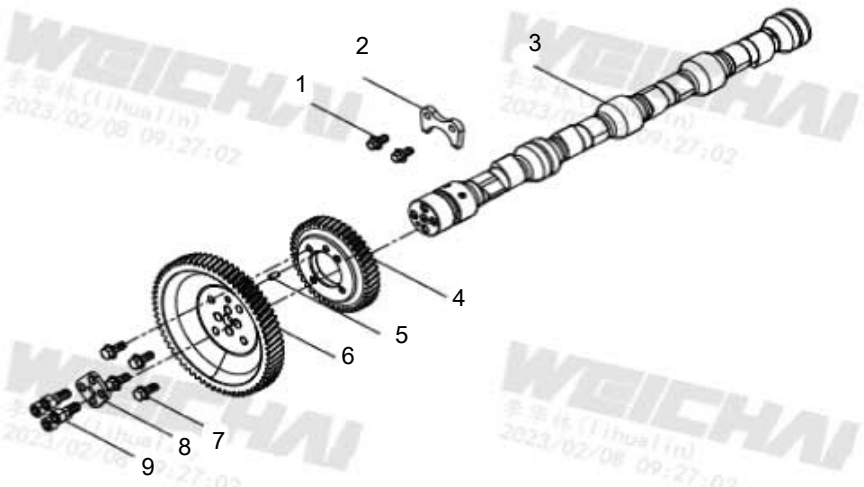

860600716 CAMSHAFT ASSY

800194272 ENGINE

No.	PART NUMBER	QTY	NAME	NOTE	PAGE
1	**860600717**	2	STRENGTHENING SCREW BOLT		
2	**860132019**	1	SECTOR PLATE		
3	**860566034**	1	CAMSHAFT		
4	**860600718**	1	IDLER GEAR		
5	**860505112**	1	CYLINDRICAL PIN		
6	**860505111**	1	CAMSHAFT TIMING GEAR		
7	**860600719**	4	STRENGTHENING SCREW BOLT		
8	**860501226**	1	FLANGE		
9	**860600720**	4	INNER-HEXAGON SCREW		

860600721 VALVE TRAIN GROUP

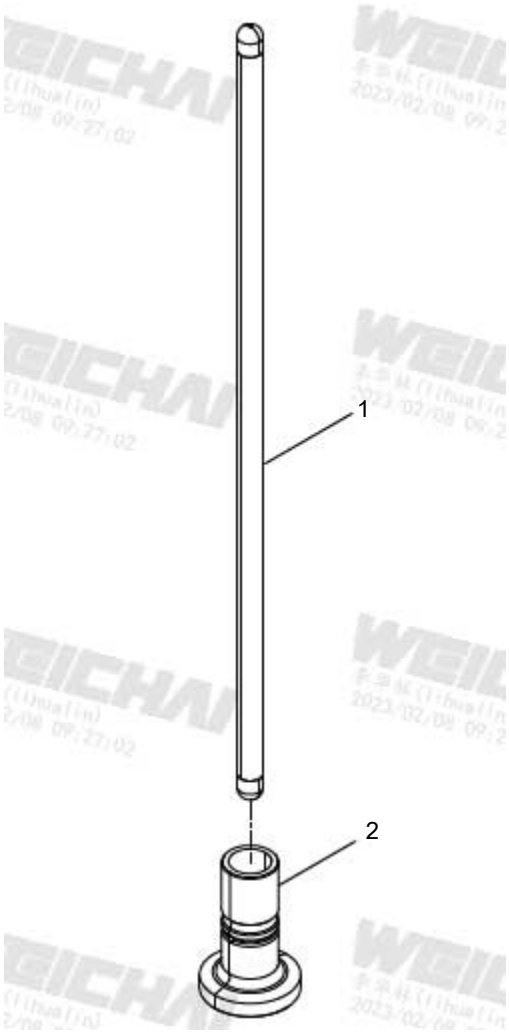

860600721 VALVE TRAIN GROUP

800194272 ENGINE

No.	PART NUMBER	QTY	NAME	NOTE	PAGE
1	**860505113**	1	PUSHING BAR		
2	**860300428**	1	TAPPET		

860600722 OIL PUMP GROUP

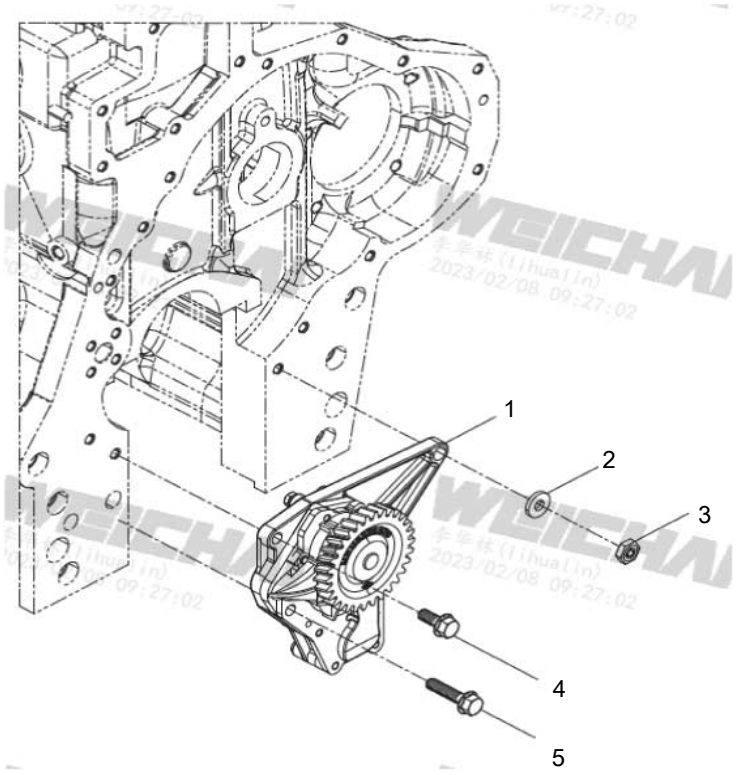

860600722 OIL PUMP GROUP

800194272 ENGINE

No.	PART NUMBER	QTY	NAME	NOTE	PAGE
1	**860131502**	1	PUMP ASM		
2	**860501323**	1	SPACER		
3	**860131203**	1	TYPE 2 ALL-METAL HEXAGON LOCK NUT		
4	**860501224**	1	HEXAGON SERRATED FLANGE BOLT		
5	**860600723**	1	HEXAGON SERRATED FLANGE BOLT		

860600724 FILTER ASM

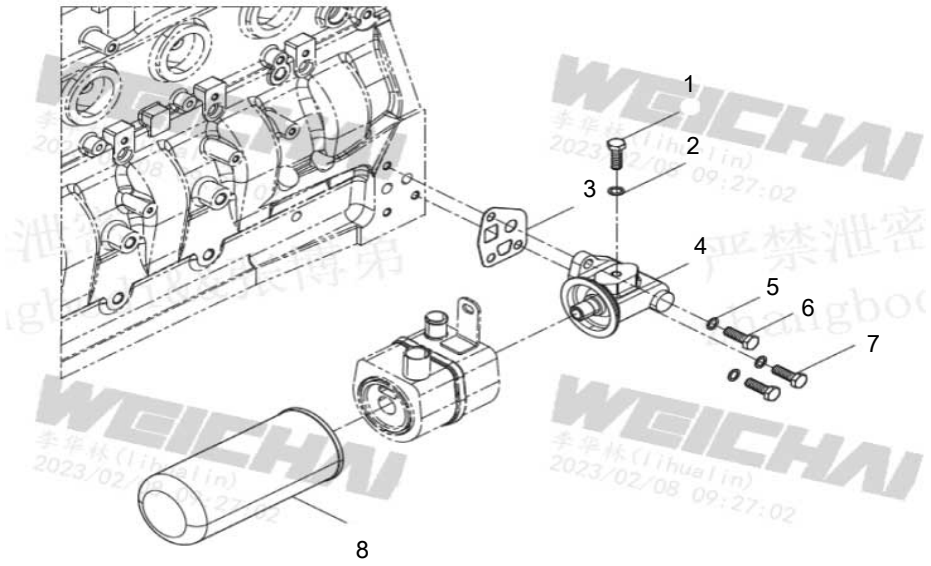

860600724 FILTER ASM

800194272 ENGINE

No.	PART NUMBER	QTY	NAME	NOTE	PAGE
1	**860600725**	1	HEXAGON HEAD SCREW PLUG		
2	**860157616**	1	SAEL RING		
3	**860131770**	1	SPACER		
4	**860131534**	1	ENGINE OIL FILTER SEAT ASSY		
5	**860600726**	3	WAVE SPRING WASHER		
6	**860600727**	1	HEXAGON BOLT		
7	**860541912**	2	INNER-HEXAGON SCREW		
8	**803420876**	1	ENGINE OIL FILTER CORE		

860131534 ENGINE OIL FILTER SEAT ASSY

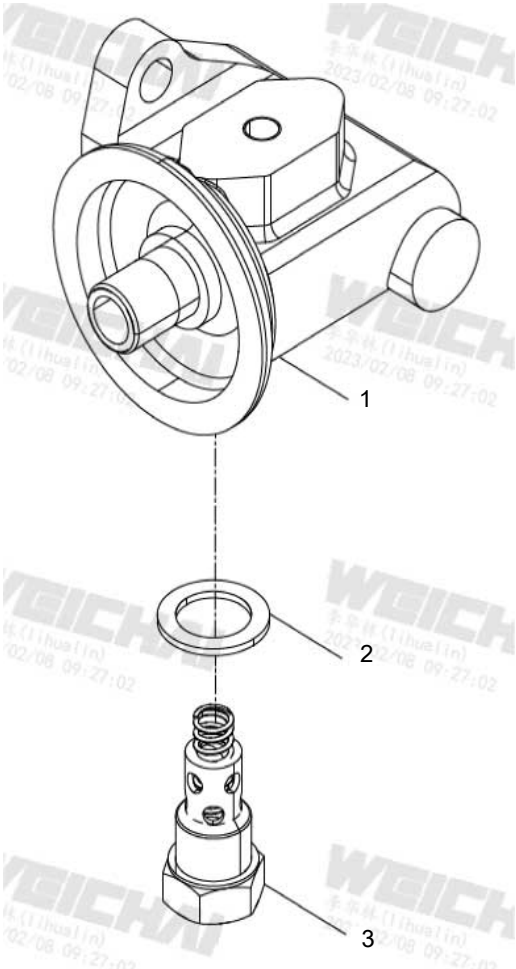

860131534 ENGINE OIL FILTER SEAT ASSY

860600724 FILTER ASM

No.	PART NUMBER	QTY	NAME	NOTE	PAGE
1	**860600728**	1	ENGINE OIL FILTER SEAT		
2	**860600729**	1	SPACER		
3	**860505125**	1	PRESSURE-LIMITING VALVE		

860600730 COOLER ASM

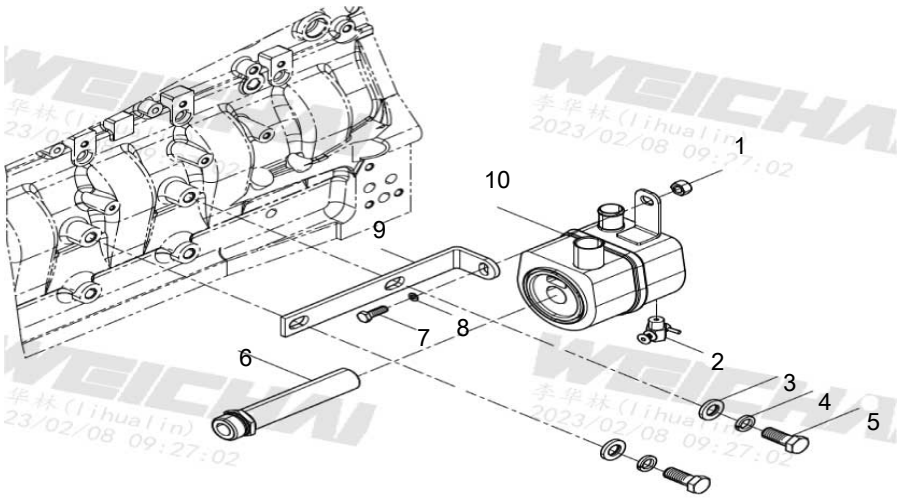

860600730 COOLER ASM

800194272 ENGINE

No.	PART NUMBER	QTY	NAME	NOTE	PAGE
1	**860600731**	1	JAM NUT		
2	**860117728**	1	DRAIN VALVE		
3	**860600732**	2	SPACER		
4	**860505130**	2	SPRING WASHER		
5	**860600733**	2	HEXAGON BOLT		
6	**860131683**	1	SPLICE		
7	**860600727**	1	HEXAGON BOLT		
8	**459304318**	1	90014040008		
9	**860600734**	1	OIL COOLER BRACKET		
10	**860117785**	1	ENGINE OIL COOLER		

860600735 OIL STRAINER GROUP

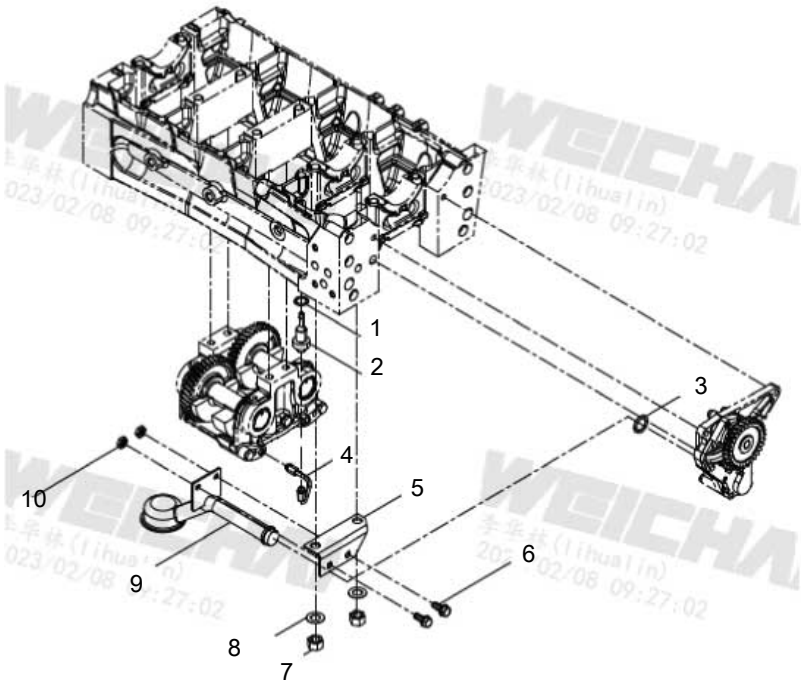

860600735 OIL STRAINER GROUP

800194272 ENGINE

No.	PART NUMBER	QTY	NAME	NOTE	PAGE
1	**860600736**	1	SEAL WASHER		
2	**860131767**	1	TYPE FEMAL		
3	**860600737**	1	O SEAL RING		
4	**860132017**	1	LUBRICATION OIL PIPE		
5	**860501327**	1	CHECKING SHEET		
6	**860534760**	2	HEXAGON FLANGE BOLT		
7	**459334239**	2	BOLT		
8	**860501270**	2	WAVE SPRING WASHER		
9	**860600738**	1	COLLECTING FILTER ASSEMBLY		
10	**860131203**	2	TYPE 2 ALL-METAL HEXAGON LOCK NUT		

860600739 SUPERCHARGER LUBRICATING OIL PIPE

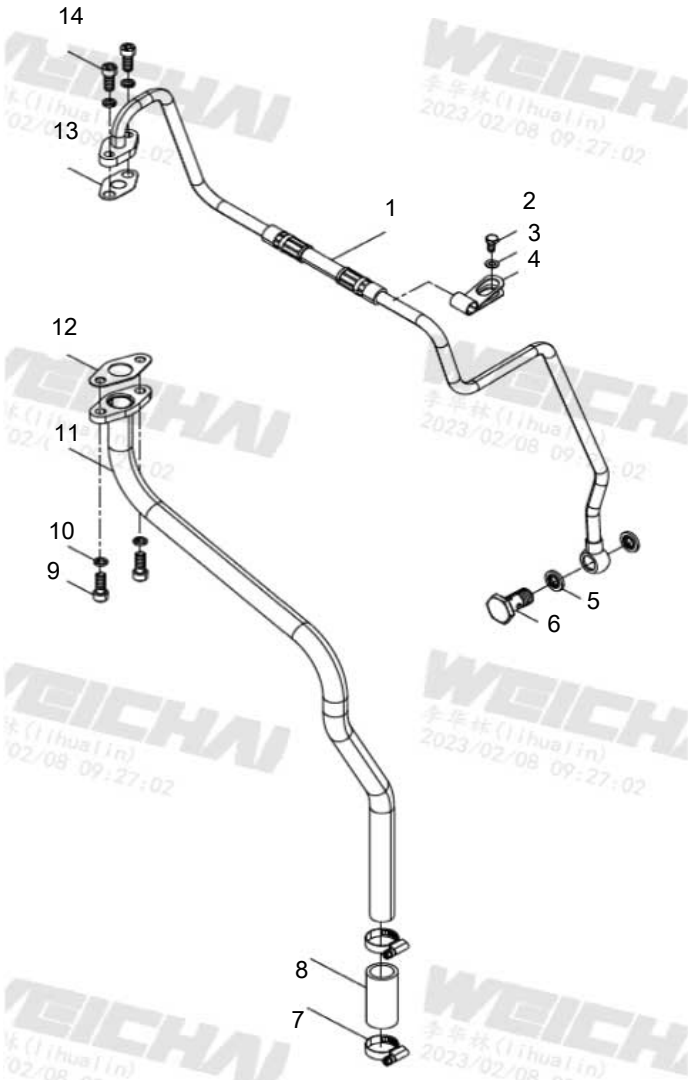

860600739 SUPERCHARGER LUBRICATING OIL PIPE

800194272 ENGINE

No.	PART NUMBER	QTY	NAME	NOTE	PAGE
1	**860544688**	1	TURBOCHARGER OIL INLET PIPE		
2	**860131700**	1	HEXAGON BOLT		
3	**860600740**	1	WAVE SPRING WASHER		
4	**860600741**	1	HOOP		
5	**800178460**	2	COMPOSE WASHER		
6	**860505136**	1	BOLT		
7	**860132002**	2	HOOP		
8	**860132168**	1	OIL FILTER MOUNTING PLATE		
9	**860501258**	2	INNER-HEXAGON SCREW		
10	**860131292**	4	SPRING WASHER		
11	**860544689**	1	TURBOCHARGER OIL RETURN PIPE		
12	**860600742**	1	SPACER		
13	**860600743**	1	SPACER		
14	**860600744**	2	INNER-HEXAGON SCREW		

860600745 FUEL INJECTION PUMP GROUP

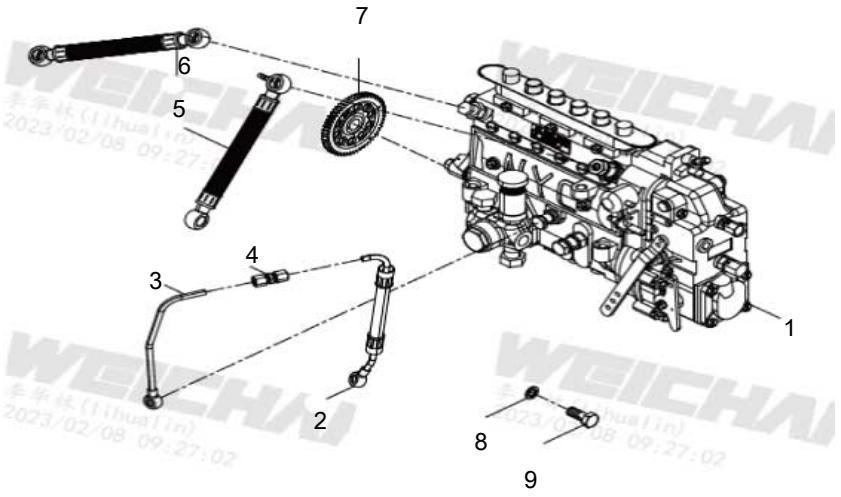

860600745 FUEL INJECTION PUMP GROUP

800194272 ENGINE

No.	PART NUMBER	QTY	NAME	NOTE	PAGE
1	**860144085**	1	FUEL INJECTION PUMP ASSEMBLY		
2	**860131844**	1	FUEL INJECTION PUMP CONNECTING PLATE		
3	**860131845**	1	FUEL INJECTION PUMP LUBRICATING OIL PIPE		
4	**860131603**	1	TYPE FEMAL		
5	**860152365**	1	PIPELINE		
6	**860131986**	1	INLET OIL PIPE		
7	**860600746**	1	IDLER GEAR		
8	**860131619**	1	BOLT		
9	**860157616**	2	SAEL RING		

860600750 LOW PRESSURE FUEL PIPE GROUP

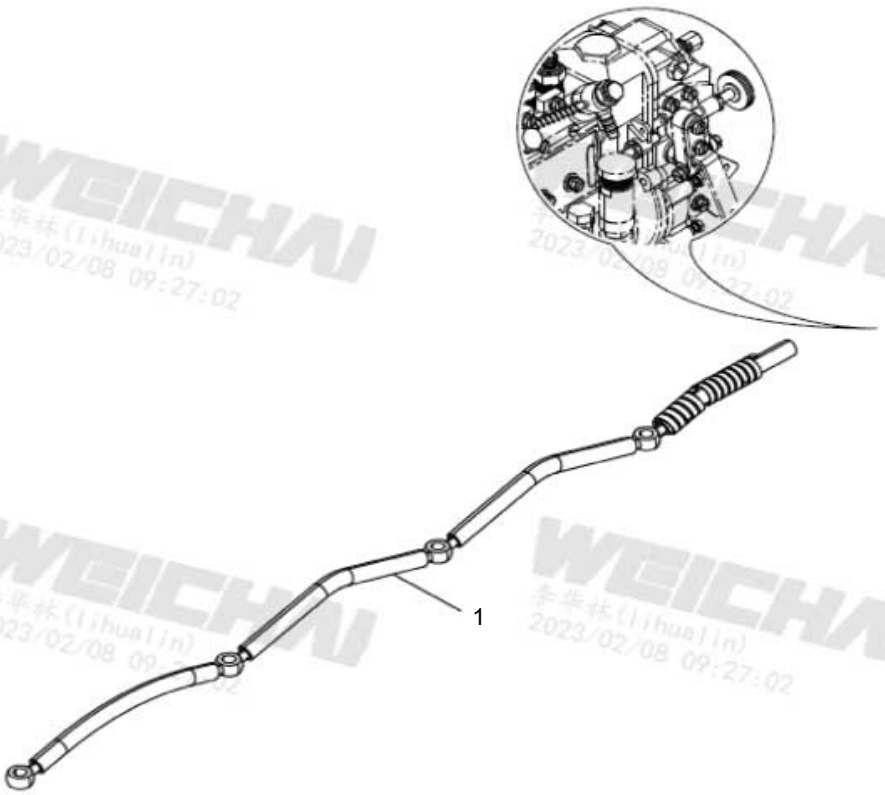

860600750 LOW PRESSURE FUEL PIPE GROUP

800194272 ENGINE

No.	PART NUMBER	QTY	NAME	NOTE	PAGE
1	**860131852**	1	FUEL RETURN PIPE ASSEMBLY		

860600751 FUEL FILTER GROUP

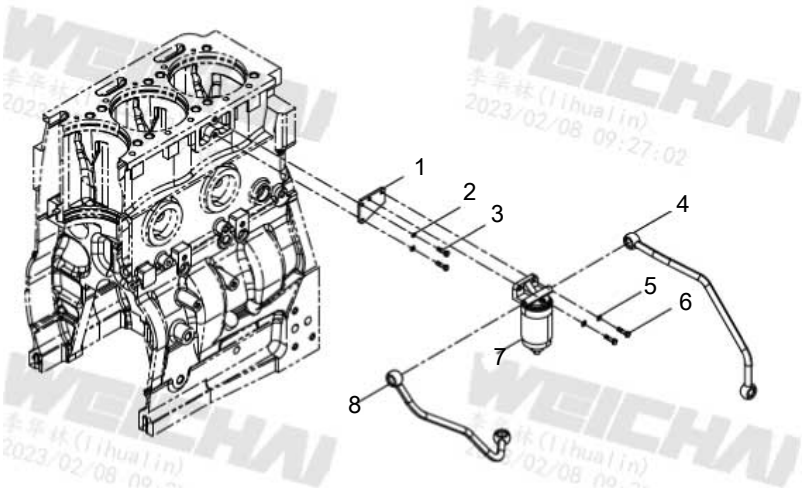

860600751 FUEL FILTER GROUP

800194272 ENGINE

No.	PART NUMBER	QTY	NAME	NOTE	PAGE
1	**860600752**	1	FUEL FILTER BRACKET		
2	**860131292**	2	SPRING WASHER		
3	**860600753**	2	HEXAGON BOLT		
4	**860131968**	1	FUEL INLET PIPE ASSY		
5	**860600754**	2	HEXAGON BOLT		
6	**860600755**	2	WAVE SPRING WASHER		
7	**860600756**	1	CUMMINS FILTRATION		
8	**860132000**	1	FUEL INLET PIPE ASSY		

860600756 CUMMINS FILTRATION

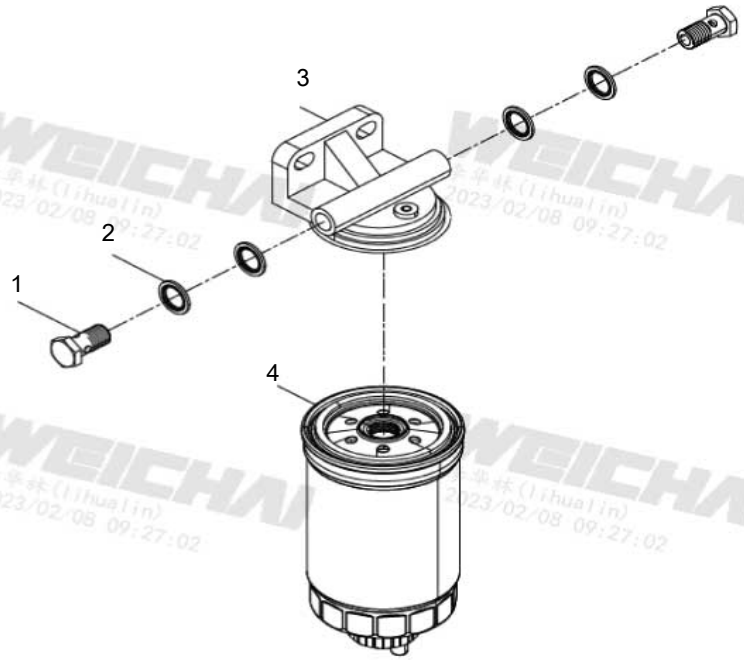

860600756 CUMMINS FILTRATION

860600751 FUEL FILTER GROUP

No.	PART NUMBER	QTY	NAME	NOTE	PAGE
1	**860505153**	2	BOLT		
2	**800360828**	4	WASHER		
3	**860614923**	1	COVER		
4	**860145954**	1	FUEL FILTER ELEMENT		

860600757 HIGH PRESSURE FUEL PIPE GROUP

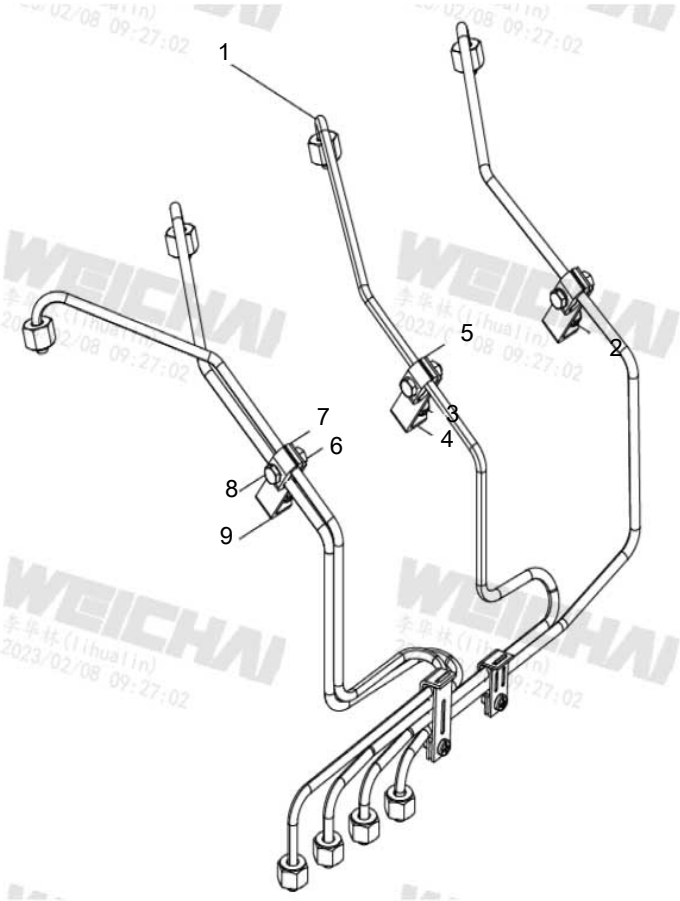

860600757 HIGH PRESSURE FUEL PIPE GROUP

800194272 ENGINE

No.	PART NUMBER	QTY	NAME	NOTE	PAGE
1	**800154150**	1	HIGH PRESSURE OIL PIPE ASSEMBLY		
2	**459305017**	3	WAVE SPRING WASHER		
3	**860505157**	3	HEXAGON FLANGE BOLT		
4	**860505158**	2	ANGULAR BRACKET		
5	**860505160**	2	PIPE CLIP		
6	**860505141**	3	BOLT		
7	**860505161**	4	PIPE CLIP		
8	**860600758**	3	HEXAGON BOLT		
9	**860505162**	1	ANGULAR BRACKET		

860600759 INTAKE PIPE ASSEMBLY

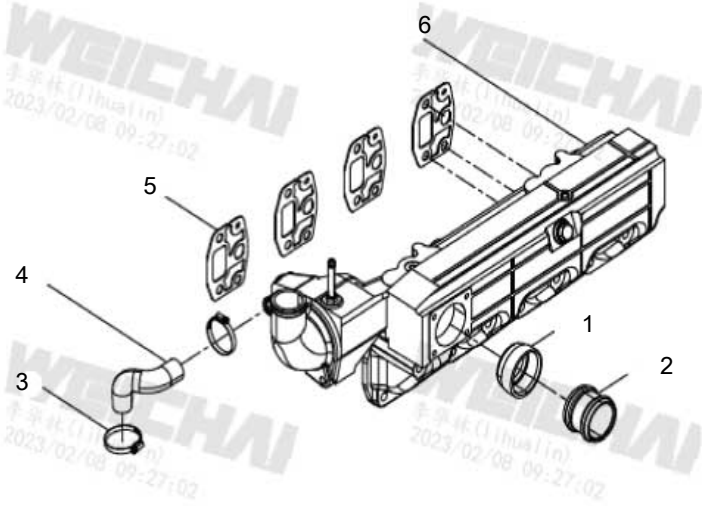

860600759 INTAKE PIPE ASSEMBLY

800194272 ENGINE

No.	PART NUMBER	QTY	NAME	NOTE	PAGE
1	**860566036**	1	TYPE FEMAL		
2	**860566037**	1	CONNECT WATER PIPE		
3	**860132002**	2	HOOP		
4	**860132187**	1	COOLANT CONNECTION HOSE		
5	**860600760**	4	INTAKE PIPE SHIM		
6	**860600761**	1	INTAKE MANIFOLD SUBASSY		

860600761 INTAKE MANIFOLD SUBASSY

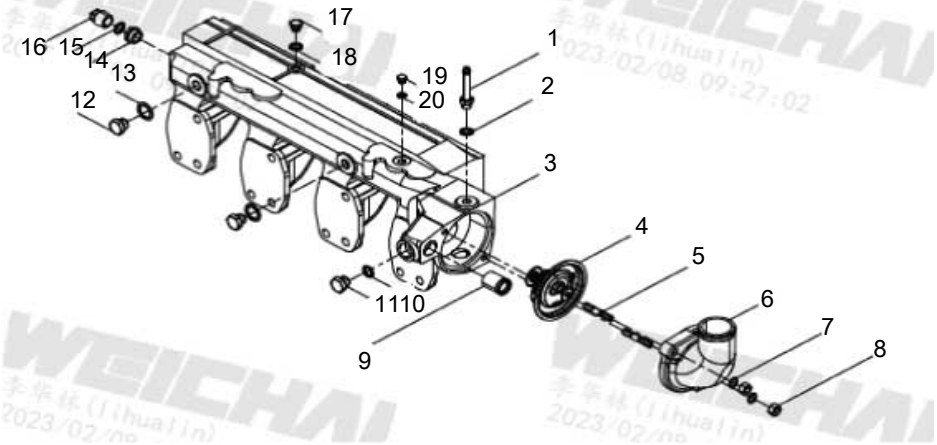

860600761 INTAKE MANIFOLD SUBASSY

860600759 INTAKE PIPE ASSEMBLY

No.	PART NUMBER	QTY	NAME	NOTE	PAGE
1	**860524306**	1	TYPE FEMAL		
2	**860157616**	1	SAEL RING		
3	**860600762**	1	INTAKE PIPE ASSEMBLY		
4	**860131565**	1	THERMOSTAT		
5	**860600763**	1	BOLT		
6	**860131572**	1	THERMOSTAT COVER		
7	**860600764**	2	WAVE SPRING WASHER		
8	**860131201**	2	TYPE 2 HEXAGON NUT		
9	**860501199**	1	TYPE FEMAL		
10	**860157730**	1	COMPOSE WASHER		
11	**860131696**	1	HEXAGON HEAD SCREW PLUG		
12	**860600765**	2	HEXAGON HEAD SCREW PLUG		
13	**800360828**	2	WASHER		
14	**860505168**	1	SPLICE		
15	**860153322**	1	SAEL RING		
16	**860153320**	1	SQUARE TAPER SCREW PLUG		
17	**860158031**	1	HEXAGON HEAD SCREW PLUG		
18	**800178460**	1	COMPOSE WASHER		
19	**860600766**	1	HEXAGON HEAD SCREW PLUG		
20	**860131773**	1	SEAL WASHER		

860600762 INTAKE PIPE ASSEMBLY

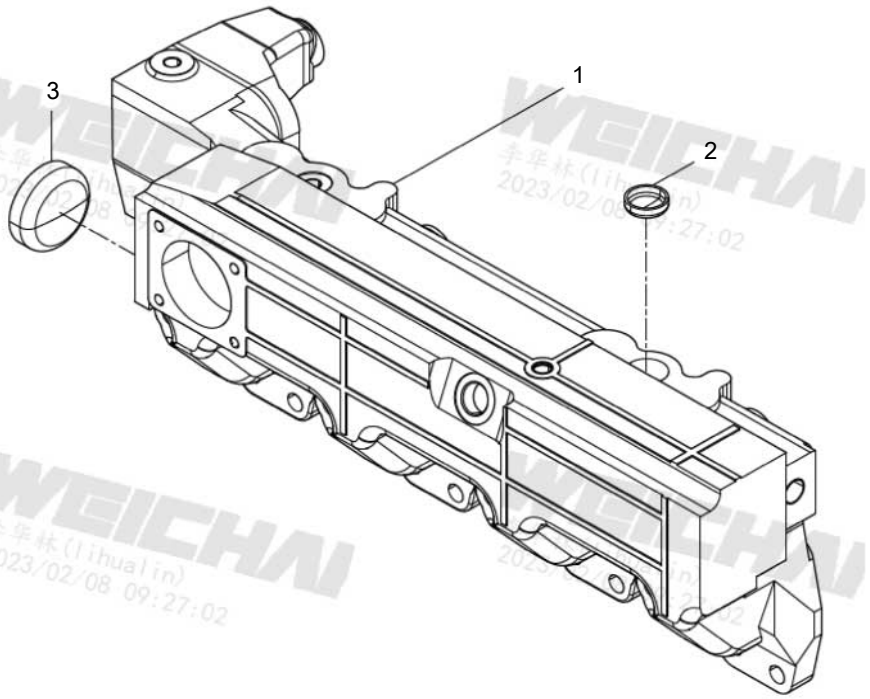

860600762 INTAKE PIPE ASSEMBLY

860600761 INTAKE MANIFOLD SUBASSY

No.	PART NUMBER	QTY	NAME	NOTE	PAGE
1	**860600767**	1	AIR-INLET PIPE		
2	**860600768**	1	CUP PLUG		
3	**860600769**	1	CUP PLUG		

860600770 WATER PUMP GROUP

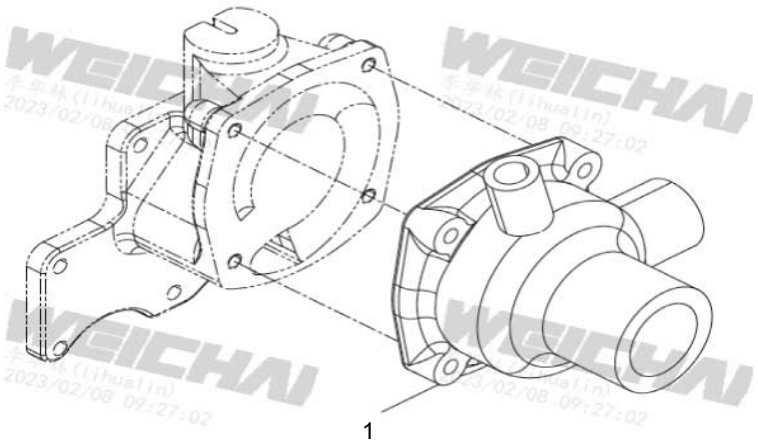

860600770 WATER PUMP GROUP

800194272 ENGINE

No.	PART NUMBER	QTY	NAME	NOTE	PAGE
1	**860127811**	1	PUMP		

860600771 FAN CONJUNCTIVE PLATE

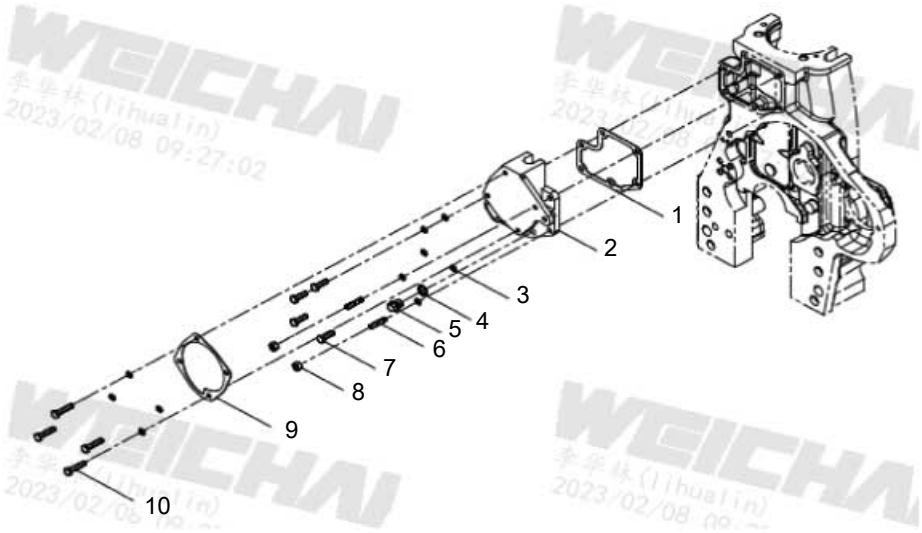

860600771 FAN CONJUNCTIVE PLATE

800194272 ENGINE

No.	PART NUMBER	QTY	NAME	NOTE	PAGE
1	**860513555**	1	WATER PUMP SEALING GASKET		
2	**860600772**	1	WATER PUMP INTERMEDIATE PAD		
3	**860131292**	10	SPRING WASHER		
4	**860153322**	1	SAEL RING		
5	**860600773**	1	HEXAGON HEAD SCREW PLUG		
6	**860600774**	2	SCREW		
7	**860600775**	2	HEXAGON BOLT		
8	**860131201**	2	TYPE 2 HEXAGON NUT		
9	**860132064**	1	WATER PUMP SEALING GASKET		
10	**860131701**	6	HEXAGON BOLT		

860600776 WATER PUMP PULLEY ASSEMBLY

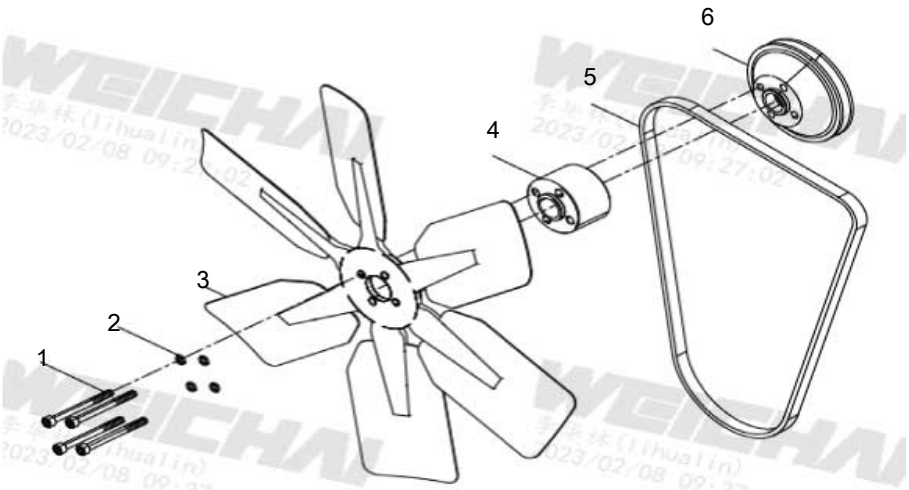

860600776 WATER PUMP PULLEY ASSEMBLY

800194272 ENGINE

No.	PART NUMBER	QTY	NAME	NOTE	PAGE
1	**860131805**	4	INNER-HEXAGON SCREW		
2	**860131292**	4	SPRING WASHER		
3	**860131256**	1	FAN		
4	**860566038**	1	FLANGE		
5	**860132276**	1	NARROW V-BELT		
6	**860566033**	1	WATER PUMP BELT PULLEY		

860600777 WATER PIPE ASSEMBLY

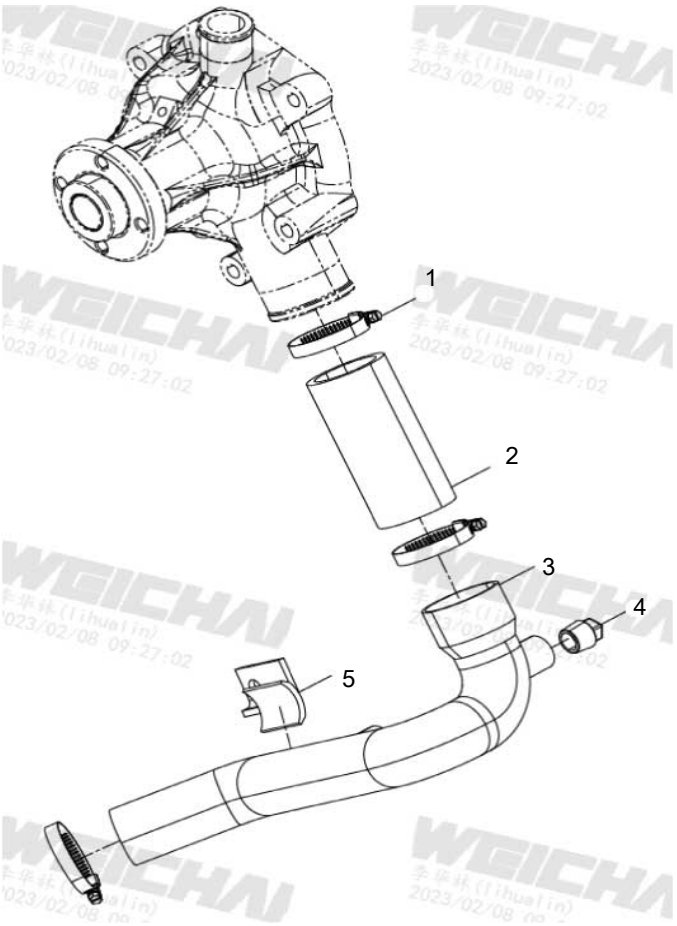

860600777 WATER PIPE ASSEMBLY

800194272 ENGINE

No.	PART NUMBER	QTY	NAME	NOTE	PAGE
1	**860600778**	3	HOOP		
2	**860132167**	1	COOLANT CONNECTION HOSE		
3	**860566048**	1	WATER PUMP WATER PIPE		
4	**860153320**	1	SQUARE TAPER SCREW PLUG		
5	**860600779**	1	BRACKET		

860600780 COOLING WATER PIPE

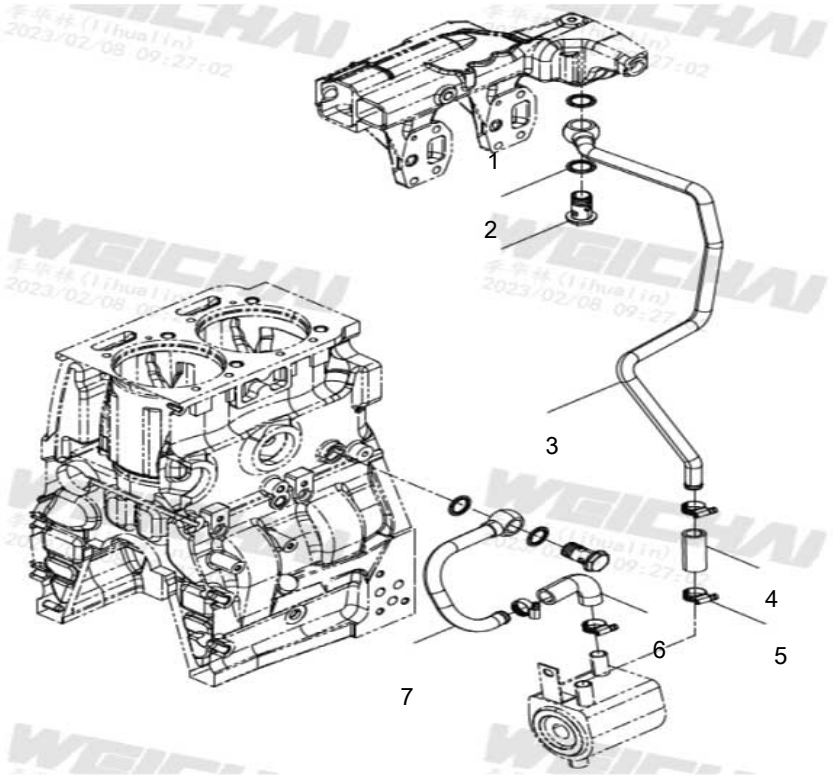

860600780 COOLING WATER PIPE

800194272 ENGINE

No.	PART NUMBER	QTY	NAME	NOTE	PAGE
1	**860153322**	4	SAEL RING		
2	**860131618**	2	BOLT		
3	**860544691**	1	WATER PIPE		
4	**860544692**	1	COOLANT CONNECTION HOSE		
5	**860501254**	4	HOOP		
6	**860132169**	1	COOLANT CONNECTION HOSE		
7	**860566049**	1	WATER PIPE		

860600781 EXHAUST MANIFOLD GROUP

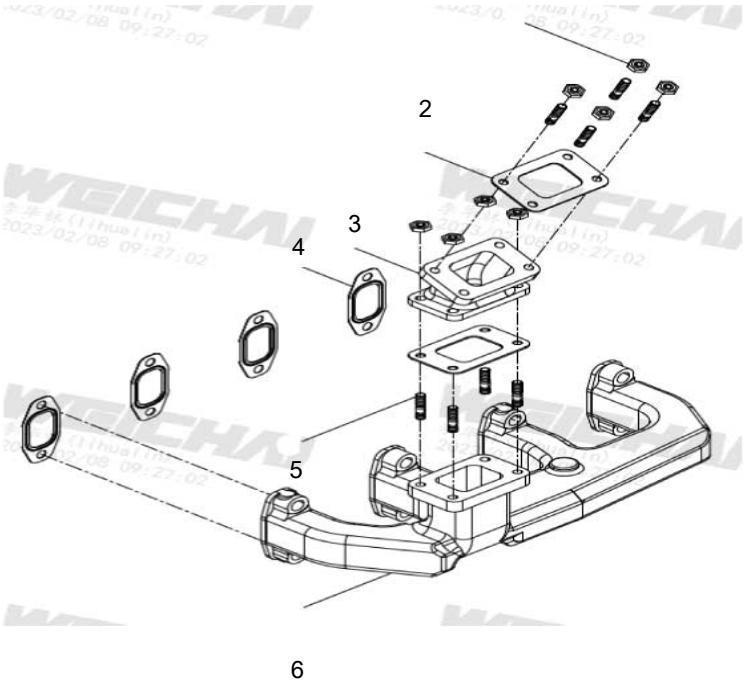

860600781 EXHAUST MANIFOLD GROUP

800194272 ENGINE

No.	PART NUMBER	QTY	NAME	NOTE	PAGE
1	**860600782**	8	HEXAGON LOCK NUT		
2	**860600783**	2	SPACER		
3	**860131829**	1	EXHAUST CONNECTING PIPE		
4	**860300394**	4	SPACER		
5	**860501346**	8	SCREW		
6	**860131813**	1	EXHAUST PIPE		

860600784 SILENCER GROUP

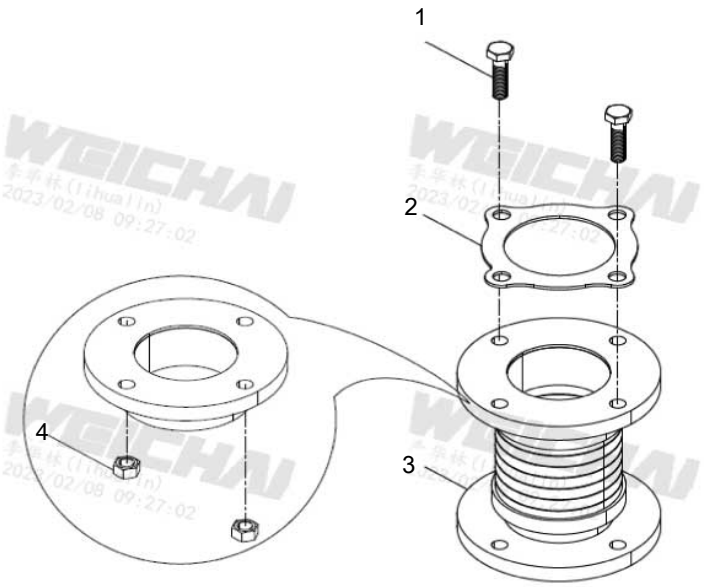

860600784 SILENCER GROUP

800194272 ENGINE

No.	PART NUMBER	QTY	NAME	NOTE	PAGE
1	**459317816**	2	HEXAGON BOLT		
2	**801140268**	1	SPACER		
3	**860138672**	1	CORRUGATED PIPE		
4	**860157649**	2	TYPE 2 HEXAGON NUT		

860600785 TURBOCHARGER GROUP

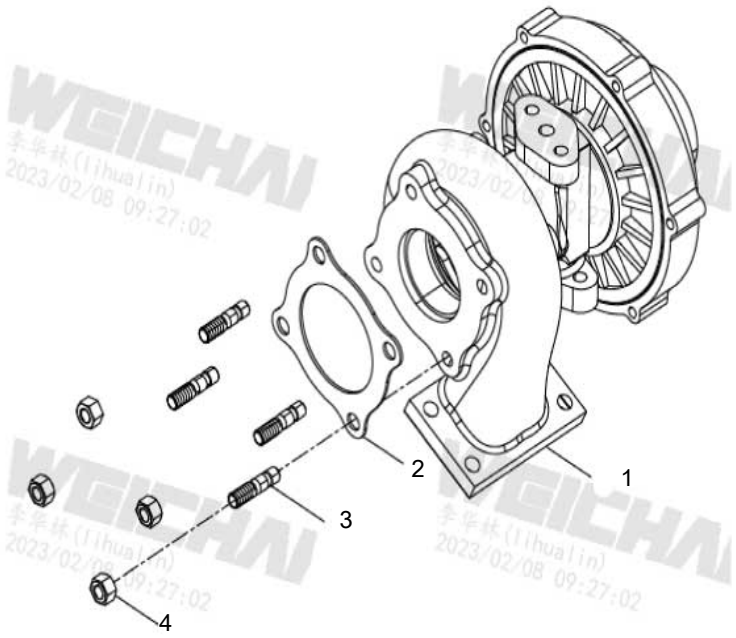

860600785 TURBOCHARGER GROUP

800194272 ENGINE

No.	PART NUMBER	QTY	NAME	NOTE	PAGE
1	**860600786**	1	TURBOCHARGER PLUMBING		
2	**860600787**	1	SPACER		
3	**860501346**	4	SCREW		
4	**860600782**	4	HEXAGON LOCK NUT		

860600788 GENERATOR BRACKET

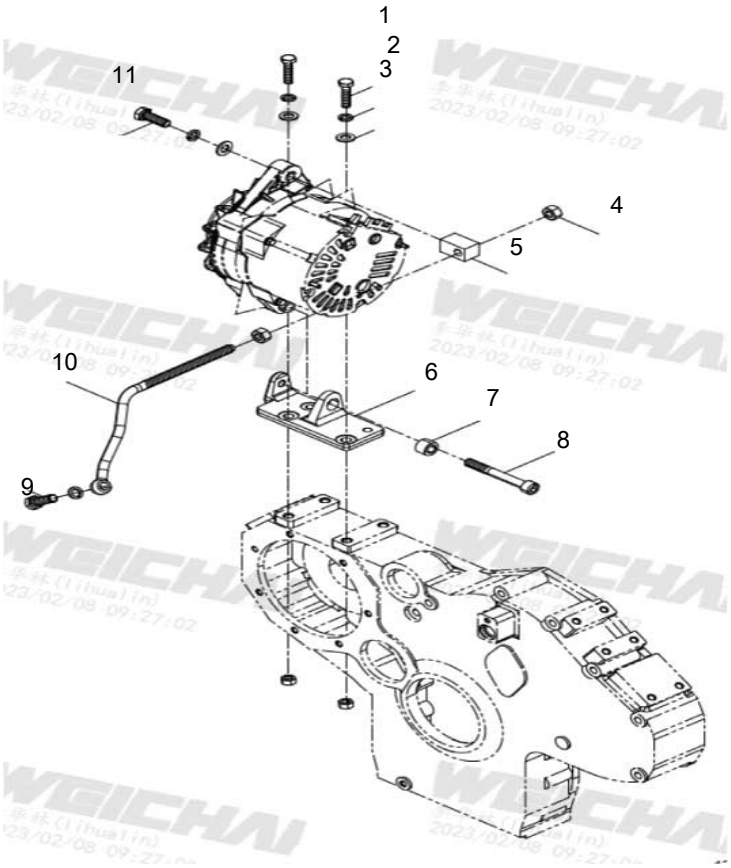

860600788 GENERATOR BRACKET

800194272 ENGINE

No.	PART NUMBER	QTY	NAME	NOTE	PAGE
1	**860600789**	2	HEXAGON BOLT		
2	**860131294**	4	SPRING WASHER		
3	**459304318**	3	90014040008		
4	**860600790**	4	TYPE 2 HEXAGON NUT		
5	**860566050**	1	TENSION BOLT BRACKET		
6	**860544684**	1	ALTERNATOR BRACKET		
7	**860505208**	1	BUSH		
8	**860544687**	1	INNER-HEXAGON SCREW		
9	**860600727**	1	HEXAGON BOLT		
10	**860544685**	1	ALTERNATOR TENSION BOLT		
11	**860600791**	1	HEXAGON BOLT		

860600792 ALTERNATOR GROUP

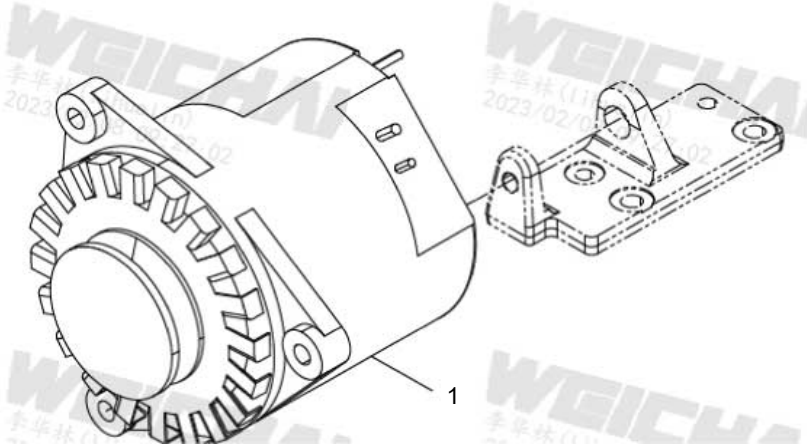

860600792 ALTERNATOR GROUP

800194272 ENGINE

No.	PART NUMBER	QTY	NAME	NOTE	PAGE
1	**860600231**	1	ALTERNATOR		

860600793 STARTER MOTOR GROUP

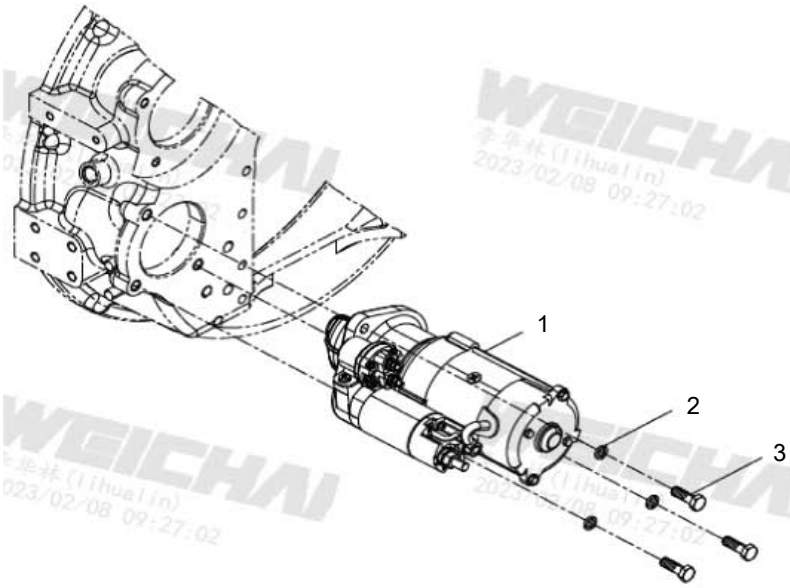

860600793 STARTER MOTOR GROUP

800194272 ENGINE

No.	PART NUMBER	QTY	NAME	NOTE	PAGE
1	**800154147**	1	MOTOR STARTING		
2	**459317726**	3	SPRING WASHER		
3	**459317819**	3	HEXAGON BOLT		

860600794 FLYWHEEL HOUSING GROUP

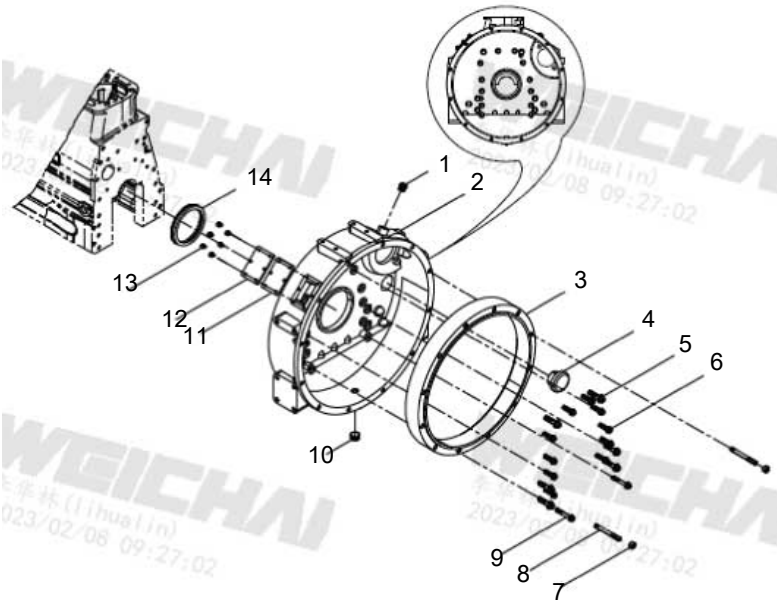

860600794 FLYWHEEL HOUSING GROUP

800194272 ENGINE

No.	PART NUMBER	QTY	NAME	NOTE	PAGE
1	**860501294**	1	HEXAGON HEAD SCREW PLUG		
2	**860600795**	1	FLYWHEEL HOUSING		
3	**860600796**	1	FLYWHEEL HOUSING CONNECTING RING		
4	**860600797**	1	RUBBER PLUG		
5	**860137494**	6	HEXAGON FLANGE BOLT		
6	**800164095**	10	HEXAGON FLANGE BOLT		
7	**860505120**	2	BOLT		
8	**459316679**	2	SCREW		
9	**860157698**	2	HEXAGON FLANGE BOLT		
10	**860501293**	1	SCREW PLUG		
11	**860514004**	1	SPACER		
12	**860501291**	1	ACCESS COVER		
13	**459318906**	6	HEXAGON FLANGE BOLT		
14	**860126389**	1	OIL SEAL		

860600798 PARKING ELECTROMAGNET ASSEMBLY

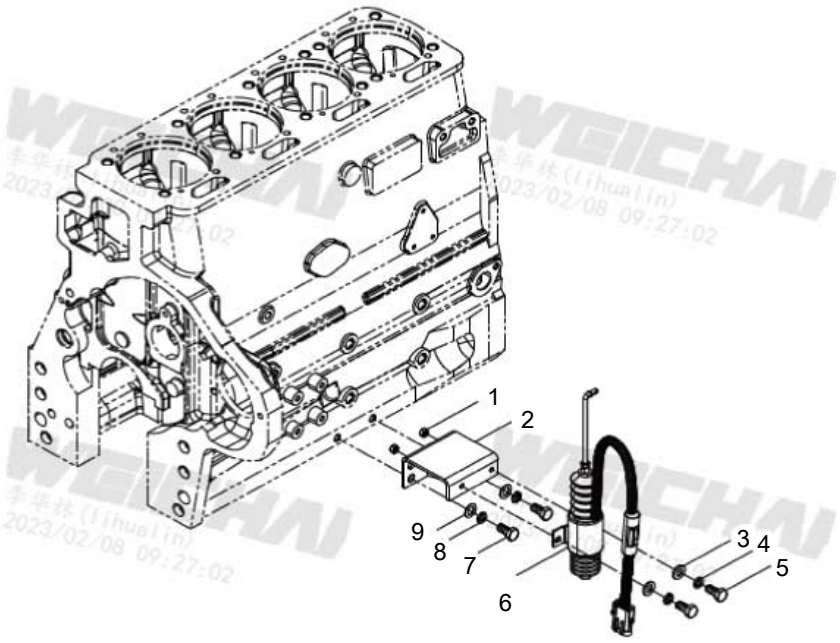

860600798 PARKING ELECTROMAGNET ASSEMBLY

800194272 ENGINE

No.	PART NUMBER	QTY	NAME	NOTE	PAGE
1	**860505141**	2	BOLT		
2	**860600799**	1	PARKING ELECTROMAGNETIC BRACKET		
3	**860600800**	2	FLAT WASHER		
4	**459317726**	2	SPRING WASHER		
5	**860505152**	2	HEXAGON BOLT		
6	**860127186**	2	PARKING ELECTROMAGNET		
7	**459401354**	1	HEXAGON HEADED BOLT		
8	**860155005**	2	SPRING WASHER		
9	**860505072**	2	SPACER		

860600801 PARTS BOX GROUP

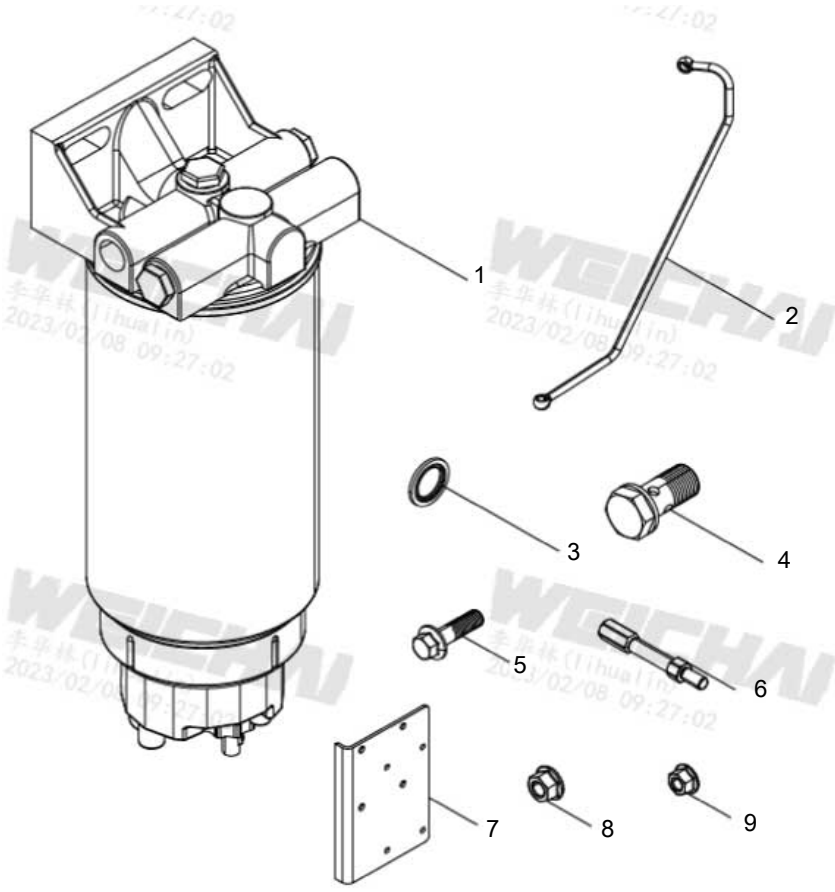

860600801 PARTS BOX GROUP

800194272 ENGINE

No.	PART NUMBER	QTY	NAME	NOTE	PAGE
1	**860131271**	1	CUMMINS FILTRATION		
2	**860152364**	2	INLET OIL PIPE		
3	**800360828**	10	WASHER		
4	**800360829**	5	BOLT		
5	**860153419**	4	HEX BOLT		
6	**860548480**	6	BOLT		
7	**860559426**	1	MUFFLER BRACKET		
8	**860600802**	4	HEXAGON FLANGE LOCKING NUT		
9	**860600803**	4	HEXAGON FLANGE LOCKING NUT		

860148923 AIR FILTER ASSEMBLY

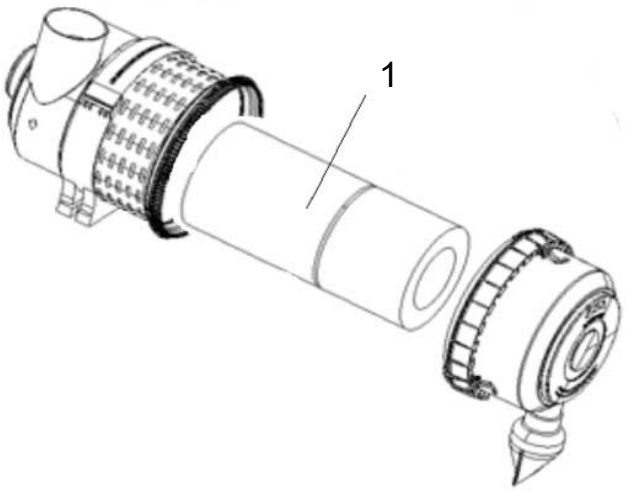

860148923 AIR FILTER ASSEMBLY

800194272 ENGINE

No.	PART NUMBER	QTY	NAME	NOTE	PAGE
1	**860148924**	1	AIR FILTER ELEMENT		

402216345 RADIATOR ASSY

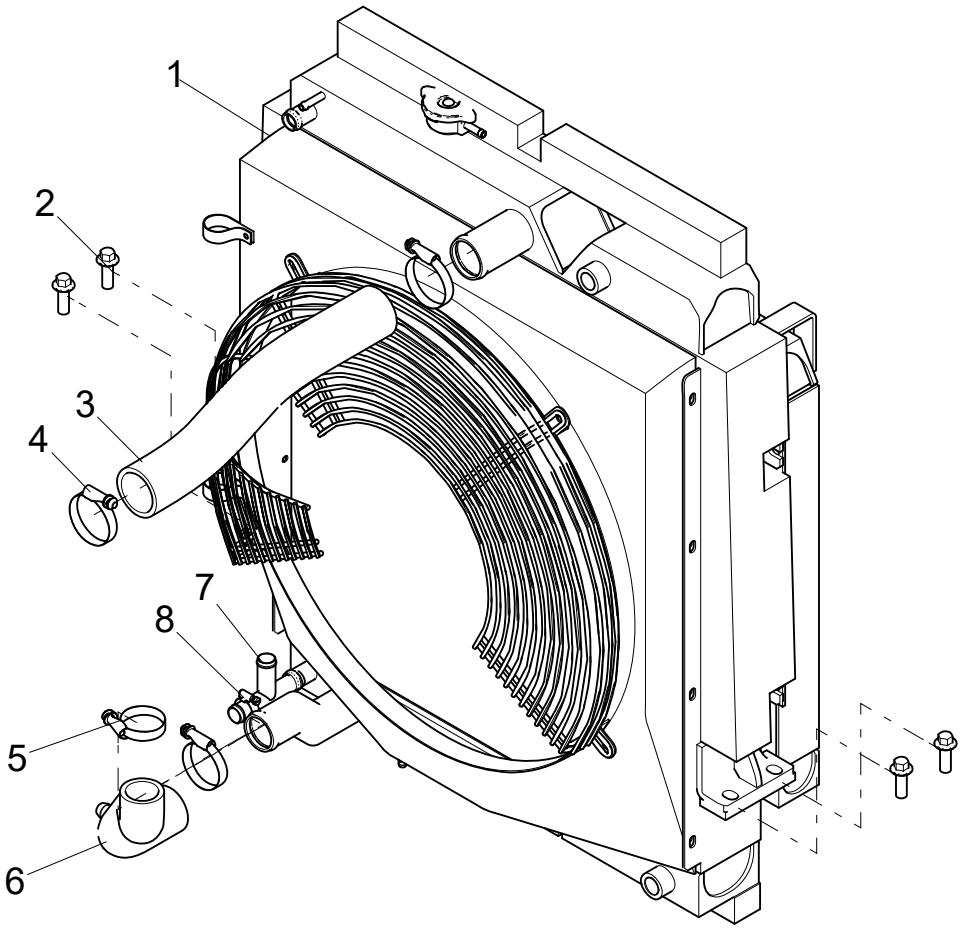

402216345 RADIATOR ASSY

402216341 POWER SYSTEM

No.	PART NUMBER	QTY	NAME	NOTE	PAGE
1	**800194271**	1	RADIATOR		
2	**805048017**	4	BOLT M12×35 (DACROMET)	GB/T16674.1-2004	
3	**402216344**	1	WATER PIPE		
4	**800159891**	3	HOOP		
5	**800160011**	1	HOOP		
6	**402216346**	1	PIPE		
7	**252917468**	1	THREE-WAY CONNECTING PIPE		
8	**801968904**	1	HOOP B14-27	QC/T619-1999	

402214970 ENGINE HOOD ASSEMBLY

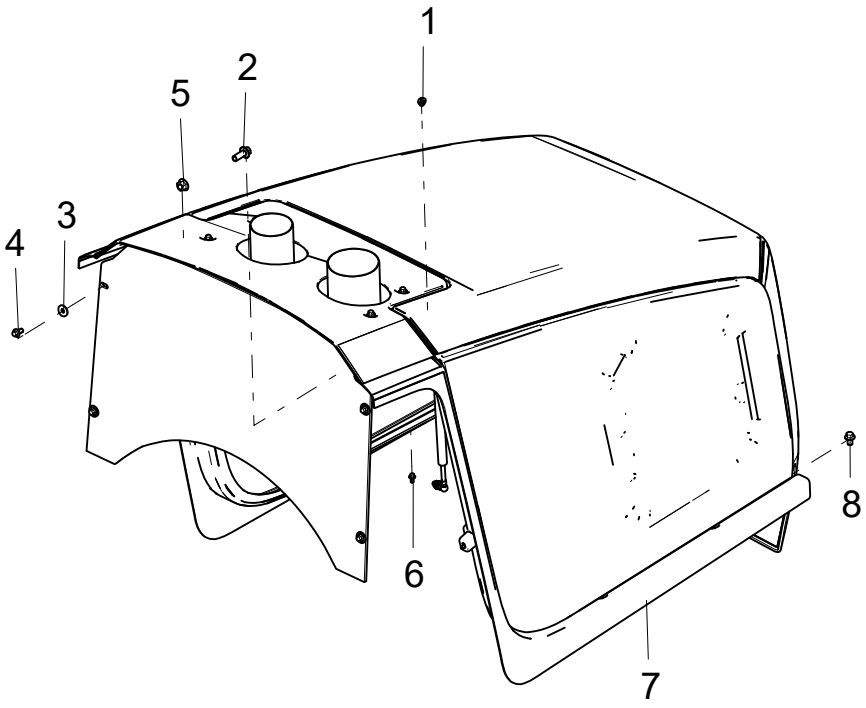

402214970 ENGINE HOOD ASSEMBLY

402216156 C2570AS

No.	PART NUMBER	QTY	NAME	NOTE	PAGE
1	**805203166**	4	NUT M8	GB/T6177.1-2000	
2	**805004699**	10	BOLT M12×30	GB/T16674.1-2004	
3	**805338265**	4	SPRING WASHER 8	GB/T96.1-2002	
4	**805004755**	4	BOLT M8×16 (DACROMET)	GB/T16674.1-2004	
5	**805204006**	10	NUT 12	GB/T6177.1-2000	
6	**805004834**	8	BOLT M6×12(DACROMET)	GB/T16674.1-2004	
7	**402214973**	1	HOOD ASSEMBLY		
8	**805048005**	4	BOLT M10×16(DACROMET)	GB/T16674.1-2004	

402214973 HOOD ASSEMBLY

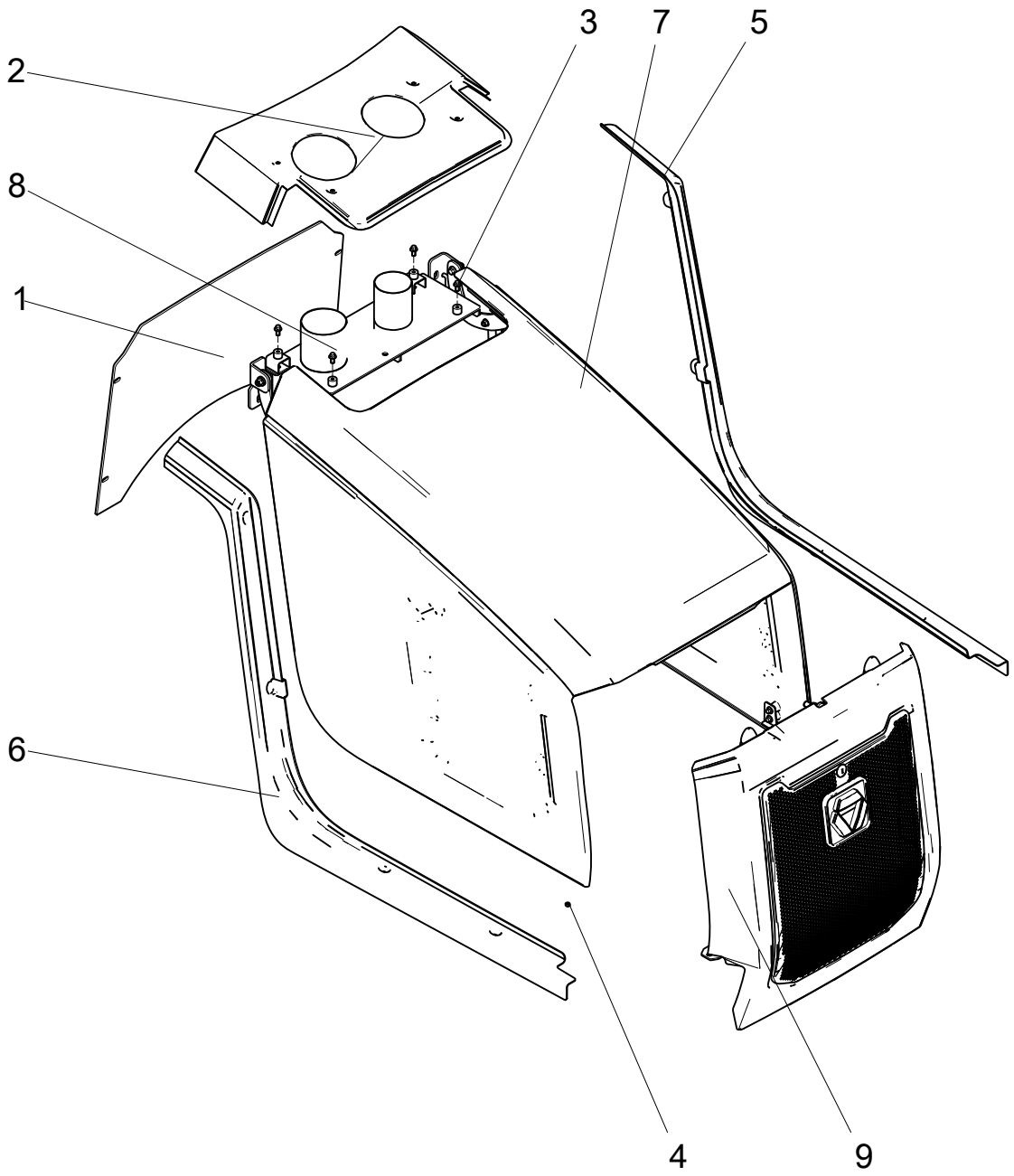

402214973 HOOD ASSEMBLY

402214970 ENGINE HOOD ASSEMBLY

No.	PART NUMBER	QTY	NAME	NOTE	PAGE
1	**402210909**	1	RUBBER PLATE		
2	**402210911**	1	COVER		
3	**805004755**	4	BOLT M8×16 (DACROMET)	GB/T16674.1-2004	
4	**805200053**	2	NUT M6	GB/T6170-2000	
5	**402212566**	1	LEFT SIDE PLATE		
6	**402212567**	1	RIGHT SIDE PLATE		
7	**402210915**	1	TURNOVER ASSEMBLY		
8	**402214972**	1	BRACKET		
9	**402210930**	1	BACK COVER		

402210915 TURNOVER ASSEMBLY

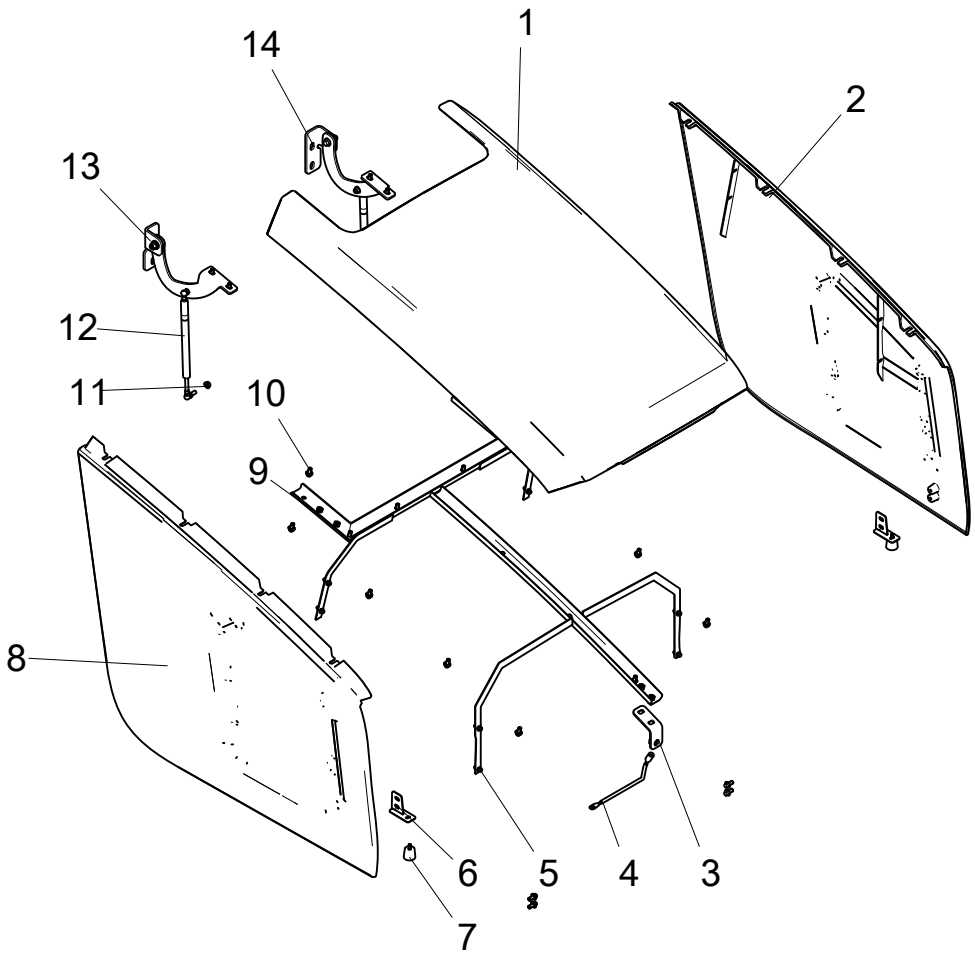

402210915 TURNOVER ASSEMBLY

402214973 HOOD ASSEMBLY

No.	PART NUMBER	QTY	NAME	NOTE	PAGE
1	**402210898**	1	FRAME		
2	**402210907**	1	RIGHT BRACKET		
3	**402210931**	1	TRANSMISSION LEFT SUPPORT		
4	**402210924**	1	TOP PLATE		
5	**402210906**	1	RIGHT SIDE PLATE		
6	**402210942**	1	LEFT SIDE PLATE		
7	**402210938**	2	GAS SPRING		
8	**402210917**	2	BRACKET		
9	**402210901**	2	SHOCK ABSORBER		
10	**402210928**	1	MOUNTING PLATE		
11	**402210908**	1	BAR		
12	**805004755**	27	BOLT M8×16 (DACROMET)	GB/T16674.1-2004	
13	**805004709**	8	BOLT M6×16(DACROMET)	GB/T16674.1-2004	
14	**805203166**	4	NUT M8	GB/T6177.1-2000	

402210930 BACK COVER

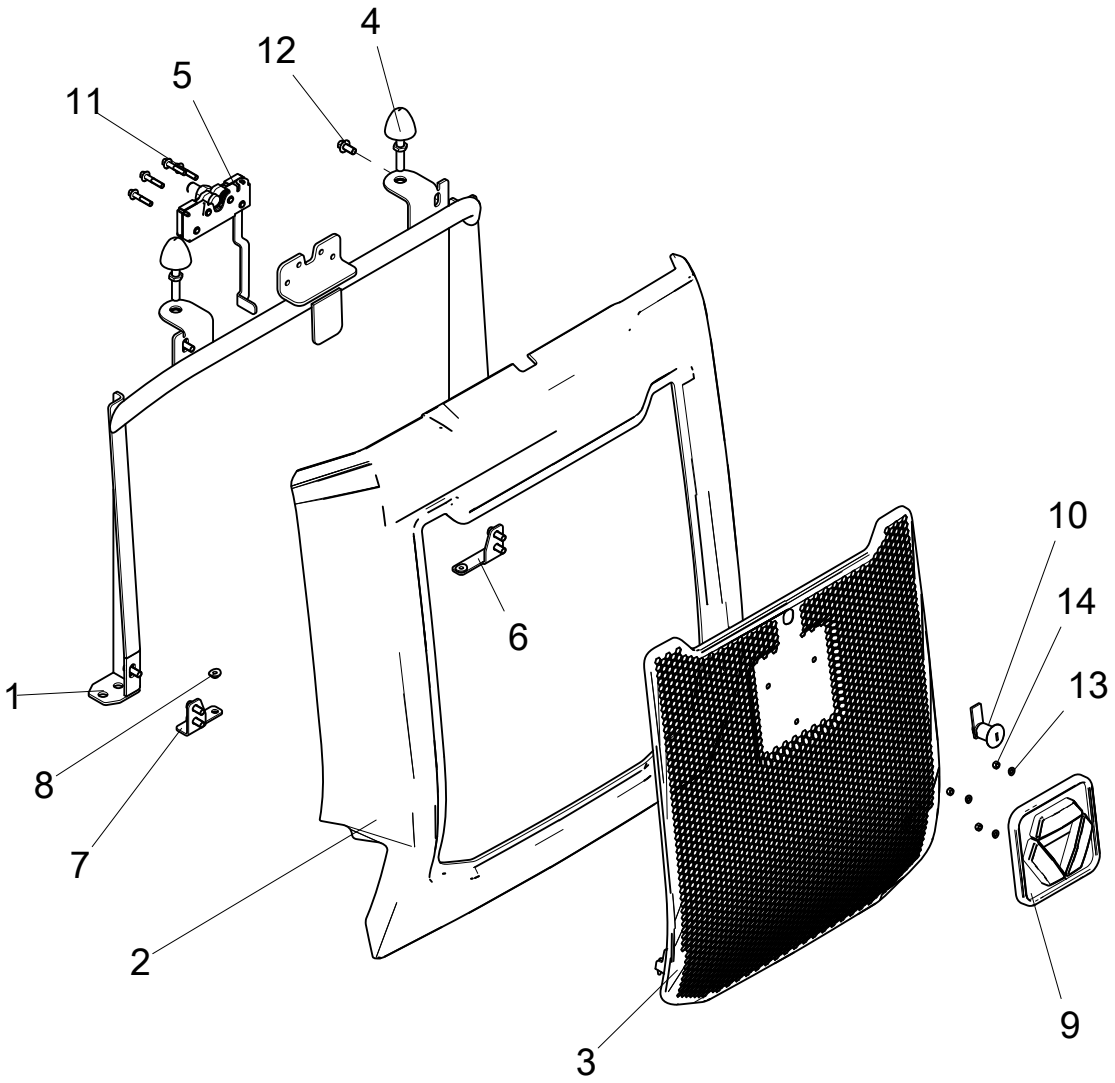

402210930 BACK COVER

402214973 HOOD ASSEMBLY

No.	PART NUMBER	QTY	NAME	NOTE	PAGE
1	**402210918**	1	FRAME		
2	**402210932**	1	DECKLE BOARD		
3	**402210946**	1	BACK COVER		
4	**402210923**	2	SHOCK ABSORBER		
5	**402210905**	1	LOCK		
6	**402210948**	1	MOUNTING PLATE		
7	**402210919**	1	MOUNTING PLATE		
8	**402210933**	2	RUBBER SLEEVE		
9	**402210897**	1	XCMG LOGO		
10	**402210914**	1	LOCK		
11	**805047994**	4	SCREW M6×30	GB/T16674.1-2004	
12	**805004755**	8	BOLT M8×16 (DACROMET)	GB/T16674.1-2004	
13	**805338383**	3	WASHER	GB/T97.1-2002	
14	**805238482**	3	NUT	GB/T6170-2000	