RUTHZIL TRATOR COMERCIAL DE PEÇAS LTDA 11 97083-6812 ROLANDO CITRANGULO

# XE150D 液压挖掘机
# HYDRAULIC EXCAVATOR

# 零件手册
# PARTS CATALOG

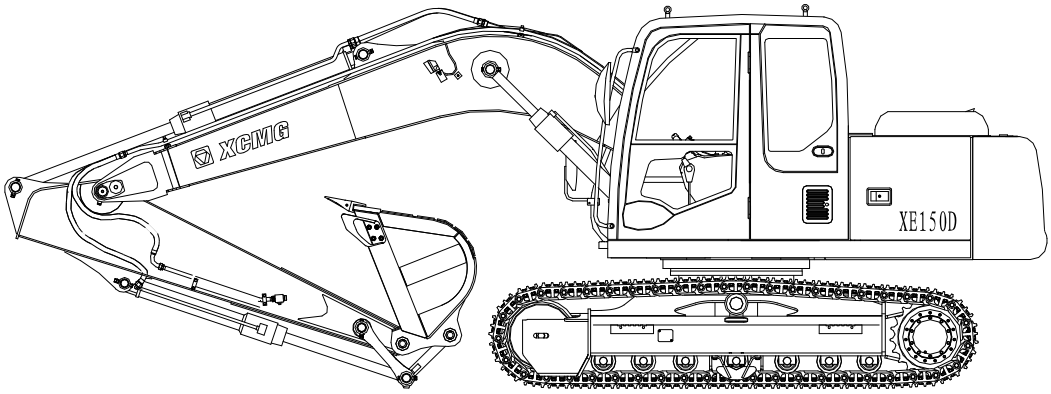


徐州徐工挖掘机械有限公司
XUZHOU XUGONG EXCAVATOR MACHINERY CO.,LTD

请正确填写以下栏目，在您订购服务配件或机器维护时将使用这些信息。
Correctly fill in the flowing columns.Use these information when ordering the service parts and serving the machine.

| | |
|---|---|
| 整机编号<br>Product Identification Number | |
| 发动机型号<br>Engine Type | |
| | |

# 前　　言

◎由于本公司会对产品进行持续改进，可能会有某些变更未能及时记录到零件手册中。若有疑问，请向最近的徐工挖机代理商询问。

◎发动机零部件，如本手册中未列出，请参阅另册发行的发动机零件手册。

1.如何订购零部件

订购零部件时，请详细注明下列各项：

（1） 机型

（2） 产品识别号

（3） 零件代号

（4） 零件名

（5） 数量

（6） 订购者姓名和地址

2、如何使用零件手册

零 件 名：零部件的名称。装配组件（总成）的各组成零件，在零件名前用标记“.”表示。

数　　量：表示一台机器所有的零件数量，但对于装配组件（总成）则表示组成一个部件的零件数量。

符号说明：服务代码栏及互换性栏中各符号的含义如下：

W:表示需进行现场加工作业，请问最近的代理店询问。

H:表示该零件为精密零件，拆卸、修理时请向最近的代理店询问。

D:表示该零件为装配部件的组成部分，不能单独更换，应更换包含该零件的部件。

K:表示服务备件中含有该零件。

R:表示不同机器中该零件的数量不同，如调整垫片。

S:表示该零件是维修、服务用供给品。

Z:表示该零件为发动机关联零部件。

OP:可供选装件。标准型机器中不装备，为特别订货品。

OS:比标准尺寸大的零件。

US:比标准尺寸小的零件。

（标有“OS”或“US”的零件写在标准尺寸零件的下面一行。）

#:表示该页零件表中新增加的零件。

Y:表示该零件和“替换零件”栏所表示的零件可互相替换。

I:表示“替换零件”栏中的零件可替换本零件，但反之不行。

T:表示该零件和“替换零件”栏中的零件组装成的部件有互换性。

P:表示禁止使用该零件，应使用“替换零件”栏里的零件。

适用机号：本零件图册中的适用机号采用产品识别号的十位数简写方式予以表示。

D:以字母 D 开头，表示零件变更切换的年月。（例：“D09/10-”表示 2009 年 10 月后适用该零件。）

H:以字母 H 开头，表示部品的制造号。

F:以字母 F 开头，表示工作装置的制造号。

替换零件：替换零件的图号及其所需的数量记录在此栏中。

注:订购零部件时，若“或换性”栏中标有“Y”、“I”“P”，则自动按“替换零件”栏所表示零部件供货。

# FOREWORD

◎According to our contiuous effort to improve the product quality,description in the Part Catalog may be slightly different from your machine.If any questionable points are found,feel free to contact your nearest XE dealer.

◎For the engine parts, please refer to the parts catalog of disel engine issued separately.

1.HOW TO ORDER PARTS

When ordering parts,please specify the following items:

（7） Model/type
（8） Product identification Number
（9） Part No.
（10） Part Name
（11） Q'ty
（12） Purchaser's Name and Address

2、HOW TO USE THIS PARTS CATALOG

PART NAME:When the part is used as an inner part of an assembly part,the mark "."is shown in front of thr part name.

Q'TY: Indicate the number of the part used per machine.The quanlity of an inner part is the number of the inner part necessary to orgnize one assembly part.

SYMBOLS USED IN THE BOOK:

The symbols shown in the service code and interchangeability columns are used to indicate the following information.

W:Requires additional processing at the job site.Ask your nearest XE dealer.
H:Indicate a precise part. Ask your nearest XE dealer for its repair.
D:Impossible to replace as a single part.Replace the part in an assembly unit.
K:Contained in the service part kit.
R:Indicate that the quantity of the part like shims differs depending on the machine serial No.
S: To be supplied as repair or service parts.
Z:Engine related parts.
OP:Optional parts not equipped on the standard specification model.To be

supplied upon receiving a special order.

OS: Over-sized parts.

US:Under-sized parts.

(Parts with mark "OS" or "US" is described in the next column under the standard size part column.)

#: Indicates newly added parts to the equipment or component.

Y:Interchangeable part without any constraint.

I:Used to indicate the part No. and quantity of the part concerned in the replacement part column.However,the part concerned is not used for the part shown with mark.

T:Becomes interchangeable when combined.

P:Indicate the part prohibited to use.Use the part shown in the replacement part column.

SERIAL NO: The serial number of this Catalog is ten-digit figure of Product Intification Number of the name-plate.

D:Represents the date of modification

(Example:D09/10:New modification part has been applied to the products manufactured in and after Oct2009.)

H:Indicates the component manufacturing No.

F:Indicates the front attachment manufacturing No.

REPLACEMENT PART:

Indicates the part No.and quantity per machine of the replacemenet part.

NOTE:

When the part with mark Y,I or P shown in the interchangeablity column is ordered,the part show in the placement part column may be automatically supplied instead of the ordered part.

# 目录

# Contents

## 1. 上车 UPPERSTRUCTURE

回转平台总成……1010-001
Frame
配重安装……1030-001
Counter Weight Support
机棚总成……1040-001
Protector
工具箱……1050-001
Tool Cover
扶手……1060-001
Stay
驾驶室总成……1100-001
Cab Assy
驾驶室……1110-001
Cab
发动机系统……1200-001
Engine System
柴油箱……1310-001
Fuel Tank
上车液压管路……1400-001
Upper Hydraulic Piping
液压油箱……1410-001
Hydraulic Oil Tank
先导液压管路……1500-001
Pilot Hydraulic Piping
左先导阀……1510-001
Left Pilot Valve
右先导阀……1520-001
Right Pilot Valve
脚先导阀……1530-001
Pedal Pilot Valve
电气系统……1600-001
Electric System
空调系统……1610-001
Air Conditioner System

## 2. 下车 UNDERCARRIAGE

底盘总成……2010-001
Undercarriage Assy
履带……2020-001
Track Chain
涨紧机构……2030-001
Adjuster
下车液压管路……2100-001
Base Hydraulic Piping
中心回转体……2110-001
Turning Joint

## 3. 工作装置 FRONT-END ATTACHMENTS

工作装置……3010-001
Worker
集中润滑……3090-001
Grease Piping
工作装置管路……3100-001
Front Piping
破碎锤管路……3210-001
Breaker Piping

## 5. 标识 NAME PLATE

标识……5010-001
Name Plate

# 回转平台总成
Frame

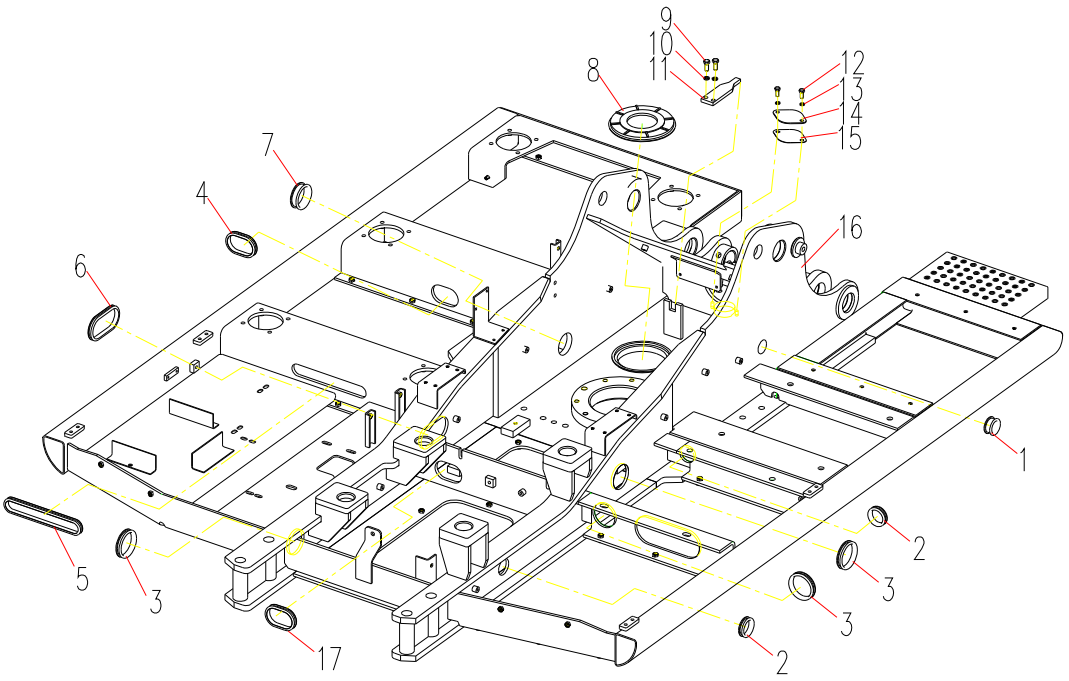

回转平台总成 Frame

| 序号 ITEM | 零件代号 Part No | 零件名 | PART NAME | 数量 Q'TY | 服务代码 S.C | 适用机号 SERIAL NO | 互换性 IA | 替换零件 REPLACEABLE PART | |
|---|---|---|---|---|---|---|---|---|---|
| | | | | | | | | 零件代号 Part No | 数量 Q'TY |
| 1 | 310500205 | 护套（一） | Rubber Bushing | 1 | | | | | |
| 2 | 310500215 | 护套（二） | Rubber Bushing | 2 | | | | | |
| 3 | 310500219 | 护套（三） | Rubber Bushing | 3 | | | | | |
| 4 | 310500210 | 护套（六） | Rubber Bushing | 3 | | | | | |
| 5 | 310500221 | 护套(七) | Rubber Bushing | 2 | | | | | |
| 6 | 310500209 | 护套（五） | Rubber Bushing | 1 | | | | | |
| 7 | 310500220 | 护套（四） | Rubber Bushing | 1 | | | | | |
| 8 | 310500214 | 防尘罩 | Cover Boot | 1 | | | | | |
| 9 | 805004804 | 螺栓 M12×30 | Bolt | 2 | | | | | |
| 10 | 805300018 | 垫圈 12 | Washer | 2 | | | | | |
| 11 | 310500213 | 拨叉 | Stopper | 1 | | | | | |
| 12 | 805000727 | 螺栓 M10×25 | Bolt | 2 | | | | | |
| 13 | 805300014 | 垫圈 10 | Washer | 2 | | | | | |
| 14 | 310500206 | 盖板 | Cover | 1 | | | | | |
| 15 | 310500207 | 密封垫 | Rubber Washing | 1 | | | | | |
| 16 | 310500121 | 回转平台 | Main Frame | 1 | | | | | |

# 回转平台总成
Frame

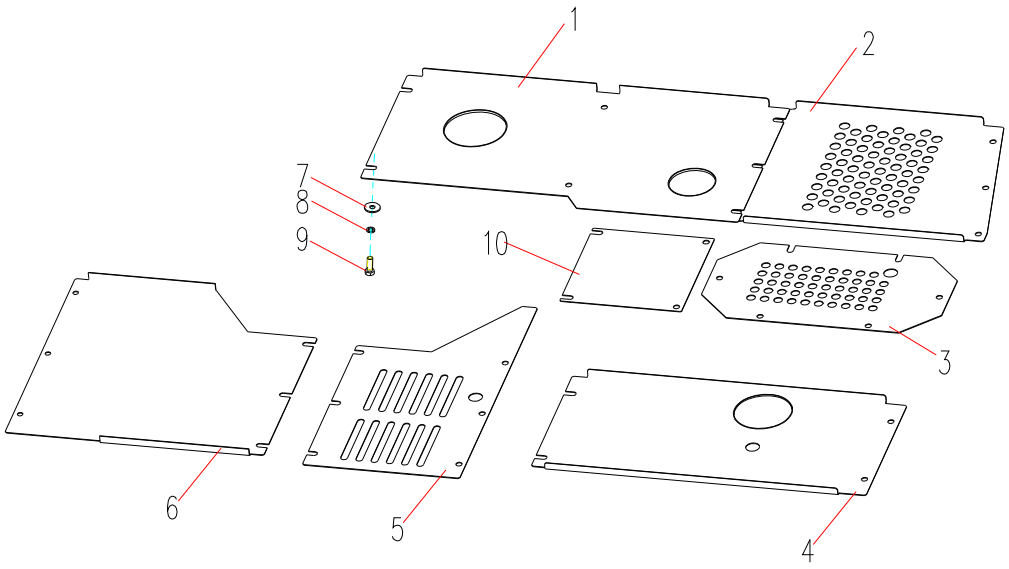

回转平台总成 Frame

| 序号 ITEM | 零件代号 Part No | 零件名 | PART NAME | 数量 Q'TY | 服务代码 S.C | 适用机号 SERIAL NO | 互换性 IA | 替换零件 REPLACEABLE PART | |
|---|---|---|---|---|---|---|---|---|---|
| | | | | | | | | 零件代号 Part No | 数量 Q'TY |
| 1 | 310500216 | 右前封板 | Cover | 1 | | | | | |
| 2 | 310500217 | 右后封板 | Cover | 1 | | | | | |
| 3 | 310500218 | 中封板 | Cover | 1 | | | | | |
| 4 | 310500208 | 左后封板 | Cover | 1 | | | | | |
| 5 | 310500211 | 左中封板 | Cover | 1 | | | | | |
| 6 | 310500212 | 左前封板 | Cover | 1 | | | | | |
| 7 | 805300102 | 大垫圈 10 | Washer | 32 | | | | | |
| 8 | 805300014 | 垫圈 10 | Washer | 32 | | | | | |
| 9 | 805000043 | 螺栓 M10×30 | Bolt | 32 | | | | | |
| 10 | 310500222 | 小中封板 | Cover | 1 | | | | | |

# 配重安装
# Counter Weight Support

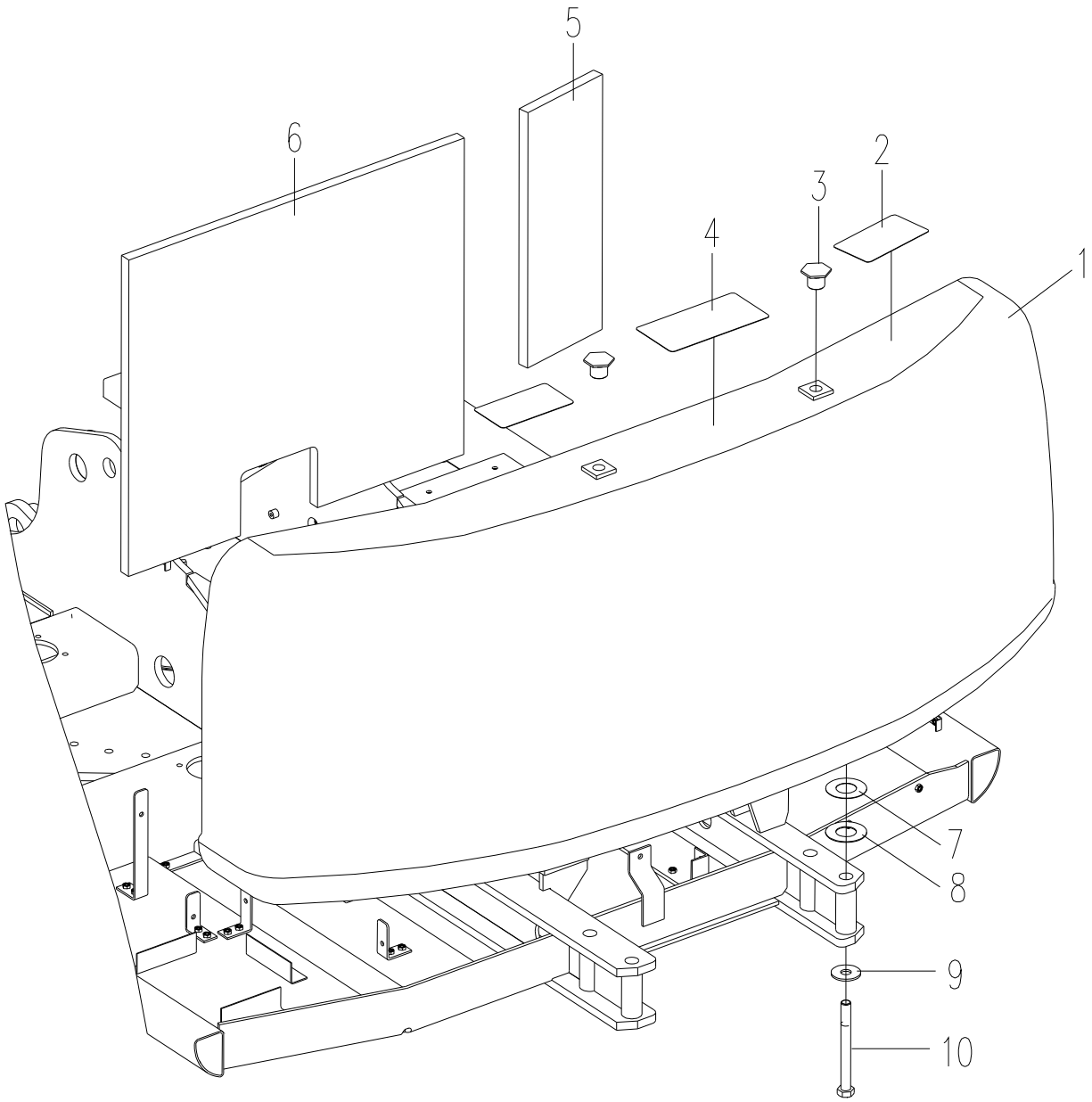

配重安装 Counter Weight Support

| 序号 ITEM | 零件代号 Part No | 零件名 | PART NAME | 数量 Q'TY | 服务代码 S.C | 适用机号 SERIAL NO | 互换性 IA | 替换零件 REPLACEABLE PART | |
|---|---|---|---|---|---|---|---|---|---|
| | | | | | | | | 零件代号 Part No | 数量 Q'TY |
| 1 | 310500031 | 配重体 | Counter Weight | 1 | | | | | |
| 2 | 310500033 | 防滑纸 | Anti-Skid Tape | 2 | | | | | |
| 3 | 310600618 | 螺堵 | Caulking | 2 | | | | | |
| 4 | 310500035 | 防滑纸 | Anti-Skid Tape | 1 | | | | | |
| 5 | 310500032 | 海绵 | Sponge | 1 | | | | | |
| 6 | 310500036 | 海绵 | Sponge | 1 | | | | | |
| 7 | 310600632 | 调整垫片 | Ajust Washer | 4 | | | | | |
| 8 | 310600631 | 调整垫片 | Ajust Washer | 4 | | | | | |
| 9 | 310500617 | 垫圈 | Washer | 4 | | | | | |
| 10 | 805041889 | 螺栓 M27×240 | Bolt | 4 | | | | | |

# 机棚总成

Protector

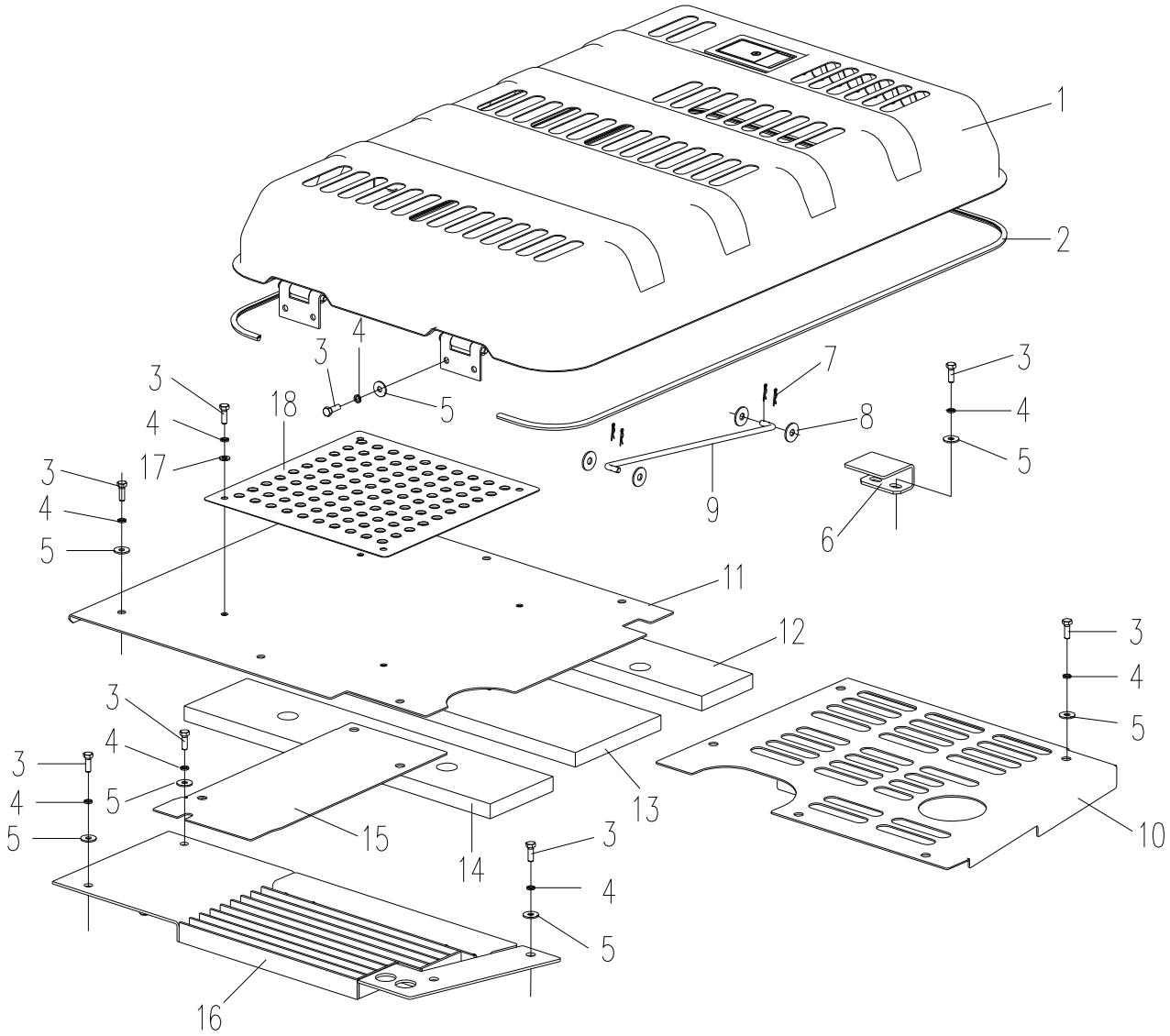

## 机棚总成 Protector

| 序号 ITEM | 零件代号 Part No | 零件名 | PART NAME | 数量 Q'TY | 服务代码 S.C | 适用机号 SERIAL NO | 互换性 IA | 替换零件 REPLACEABLE PART | |
|---|---|---|---|---|---|---|---|---|---|
| | | | | | | | | 零件代号 Part No | 数量 Q'TY |
| 1 | 310500312 | 发动机罩总成 | Cover | 1 | | | | | |
| 2 | 801905537 | 密封条 L=5000 | Seal | 1 | | | | | |
| 3 | 805000043 | 螺栓 M10×30 | Bolt | 28 | | | | | |
| 4 | 805300014 | 垫圈 10 | Washer | 28 | | | | | |
| 5 | 805300017 | 垫圈 10 | Washer | 24 | | | | | |
| 6 | 310500276 | 机罩锁挡 | Catch | 1 | | | | | |
| 7 | 310500320 | 开口销 | Split Pin | 4 | | | | | |
| 8 | 805300113 | 垫圈 12 | Washer | 4 | | | | | |
| 9 | 310500321 | 支撑杆 | Knighthead | 1 | | | | | |
| 10 | 310500275 | 右盖板 | Cover | 1 | | | | | |
| 11 | 310501073 | 盖板 | Cover | 1 | | | | | |
| 12 | 310500267 | 海绵 | Sponge | 1 | | | | | |
| 13 | 310500268 | 海绵 | Sponge | 1 | | | | | |
| 14 | 310500269 | 海绵 | Sponge | 1 | | | | | |
| 15 | 310500315 | 前盖板 | Cover | 1 | | | | | |
| 16 | 310500266 | 左后盖板 | Cover | 1 | | | | | |
| 17 | 805300017 | 垫圈 10 | Washer | 4 | | | | | |
| 18 | 310500316 | 防滑板 | Anti-Skid Plate | 1 | | | | | |

# 机棚总成
Protector

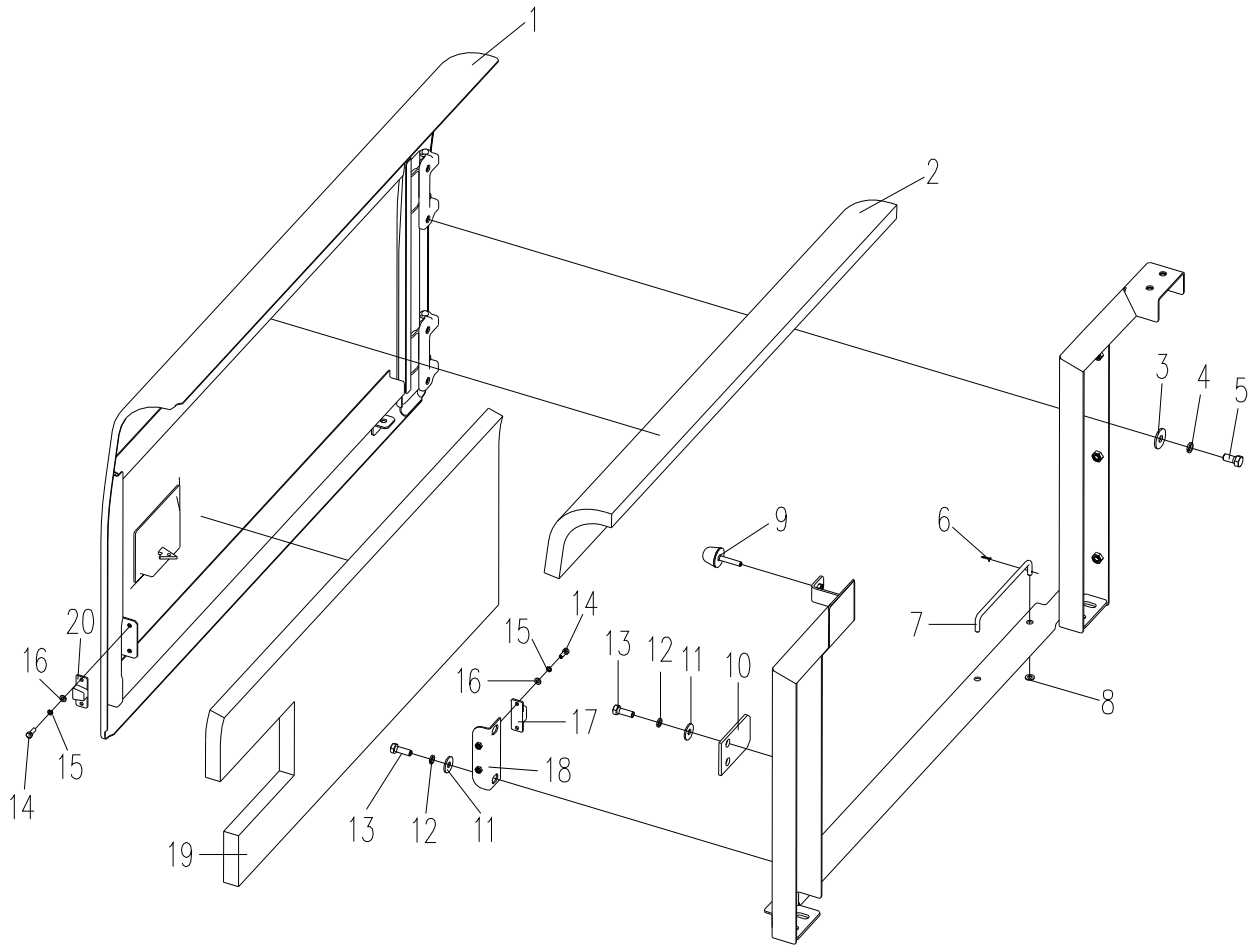

## 机棚总成 Protector

| 序号 ITEM | 零件代号 Part No | 零件名 | PART NAME | 数量 Q'TY | 服务代码 S.C | 适用机号 SERIAL NO | 互换性 IA | 替换零件 REPLACEABLE PART | |
|---|---|---|---|---|---|---|---|---|---|
| | | | | | | | | 零件代号 Part No | 数量 Q'TY |
| 1 | 310500270 | 右侧门 | Door | 1 | | | | | |
| 2 | 310500271 | 海绵 | Sponge | 1 | | | | | |
| 3 | 805300113 | 垫圈 12 | Washer | 4 | | | | | |
| 4 | 805300018 | 垫圈 12 | Washer | 4 | | | | | |
| 5 | 805000719 | 螺栓 M12×25 | Bolt | 4 | | | | | |
| 6 | 819908883 | 开口销 2×15 | Split Pin | 1 | | | | | |
| 7 | 310500317 | 风钩 | Catch | 1 | | | | | |
| 8 | 805300069 | 垫圈 8 | Washer | 1 | | | | | |
| 9 | 801905669 | 防碰球 | Defend Ball | 1 | | | | | |
| 10 | 310500318 | 门锁挡 | Lock Block | 1 | | | | | |
| 11 | 805300102 | 垫圈 10 | Washer | 4 | | | | | |
| 12 | 805300014 | 垫圈 10 | Washer | 4 | | | | | |
| 13 | 805000043 | 螺栓 M10×30 | Bolt | 4 | | | | | |
| 14 | 805002022 | 螺栓 M6×18 | Bolt | 4 | | | | | |
| 15 | 805300030 | 垫圈 6 | Washer | 4 | | | | | |
| 16 | 805300029 | 垫圈 6 | Washer | 4 | | | | | |
| 17 | 819908621 | 导向座 | Limit Block | 1 | | | | | |
| 18 | 310500309 | 限位块安装板 | Fixing Plant | 1 | | | | | |
| 19 | 310500272 | 海绵 | Sponge | 1 | | | | | |
| 20 | 819908620 | 导向块 | Limit Block | 1 | | | | | |

# 机棚总成
Protector

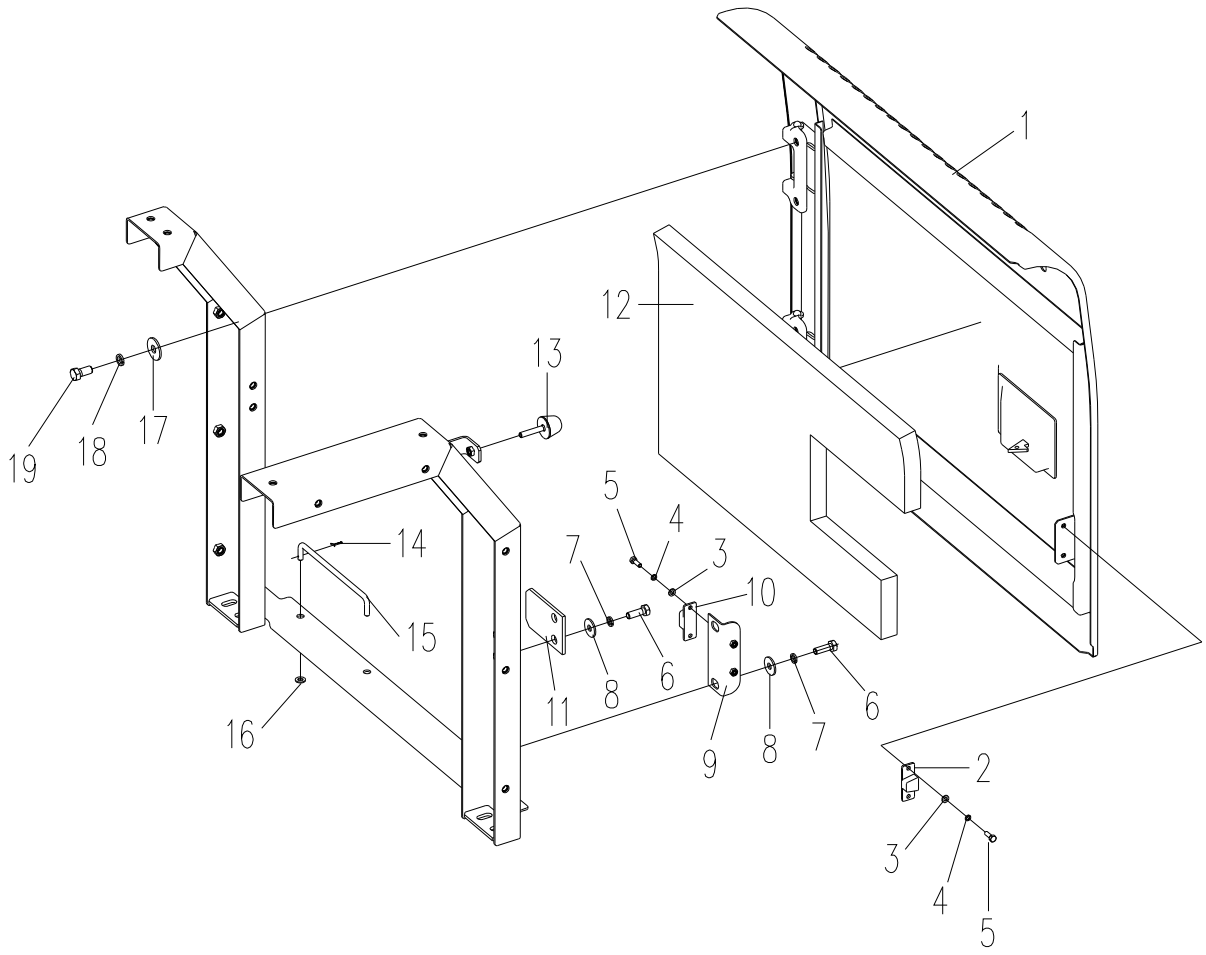

机棚总成 Protector

| 序号 ITEM | 零件代号 Part No | 零件名 | PART NAME | 数量 Q'TY | 服务代码 S.C | 适用机号 SERIAL NO | 互换性 IA | 替换零件 REPLACEABLE PART | |
|---|---|---|---|---|---|---|---|---|---|
| | | | | | | | | 零件代号 Part No | 数量 Q'TY |
| 1 | 310500273 | 左侧门 | Door | 1 | | | | | |
| 2 | 819908620 | 导向块 | Limit Block | 1 | | | | | |
| 3 | 805300029 | 垫圈 6 | Washer | 4 | | | | | |
| 4 | 805300030 | 垫圈 6 | Washer | 4 | | | | | |
| 5 | 805002022 | 螺栓 M6×18 | Bolt | 4 | | | | | |
| 6 | 805000043 | 螺栓 M10×30 | Bolt | 4 | | | | | |
| 7 | 805300014 | 垫圈 10 | Washer | 4 | | | | | |
| 8 | 805300102 | 垫圈 10 | Washer | 4 | | | | | |
| 9 | 310500309 | 限位块安装板 | Fixing Plant | 1 | | | | | |
| 10 | 819908621 | 导向座 | Limit Block | 1 | | | | | |
| 11 | 310500318 | 门锁挡 | Lock Block | 1 | | | | | |
| 12 | 310500274 | 海绵 | Sponge | 1 | | | | | |
| 13 | 801905669 | 防碰球 | Defend Ball | 1 | | | | | |
| 14 | 819908883 | 开口销 2×15 | Split Pin | 1 | | | | | |
| 15 | 310500317 | 风钩 | Catch | 1 | | | | | |
| 16 | 805300069 | 垫圈 8 | Washer | 1 | | | | | |
| 17 | 805300113 | 垫圈 12 | Washer | 4 | | | | | |
| 18 | 805300018 | 垫圈 12 | Washer | 4 | | | | | |
| 19 | 805000719 | 螺栓 M12×25 | Bolt | 4 | | | | | |

# 机棚总成
Protector

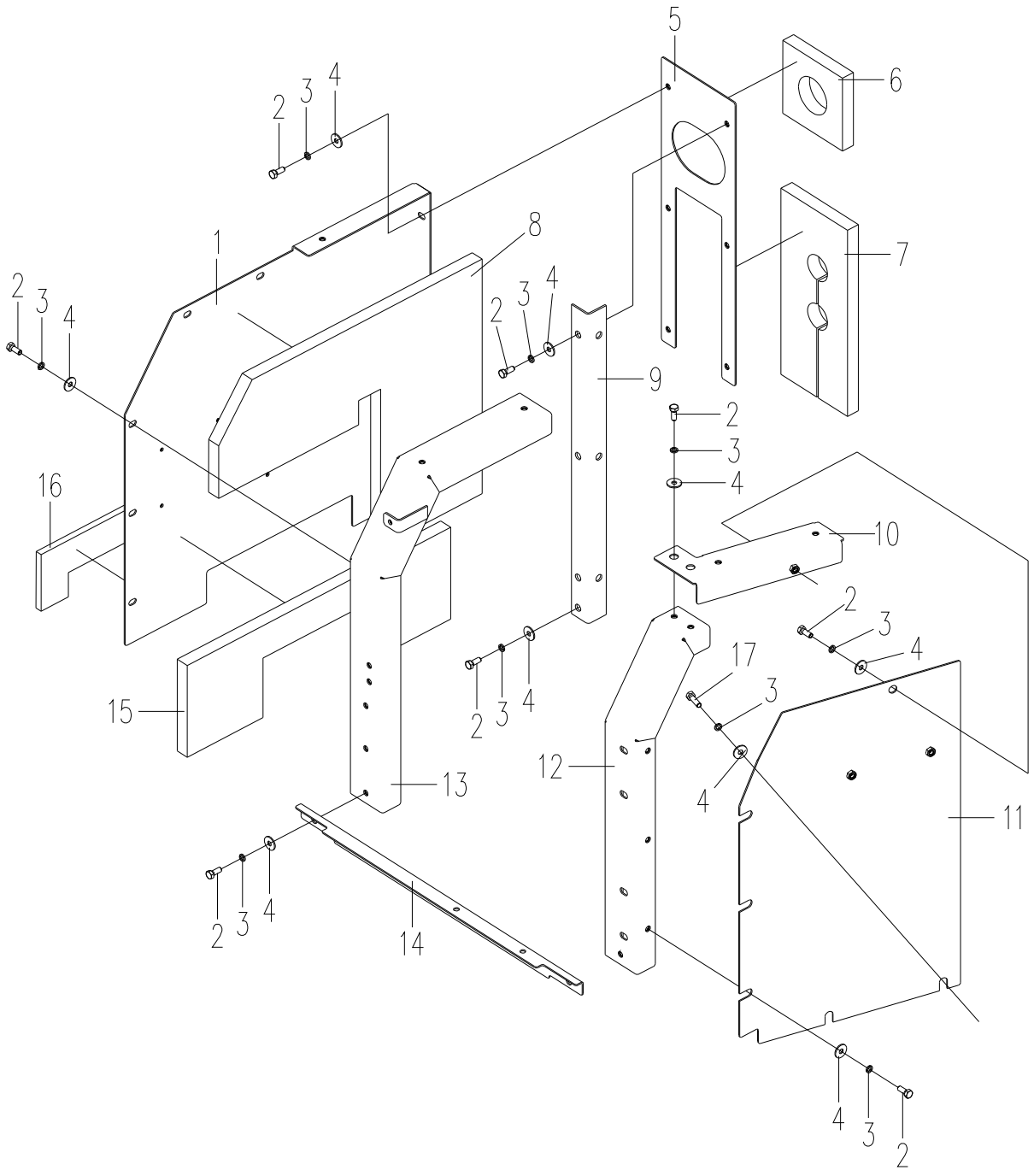

## 机棚总成 Protector

| 序号 ITEM | 零件代号 Part No | 零件名 | PART NAME | 数量 Q'TY | 服务代码 S.C | 适用机号 SERIAL NO | 互换性 IA | 替换零件 REPLACEABLE PART | |
|---|---|---|---|---|---|---|---|---|---|
| | | | | | | | | 零件代号 Part No | 数量 Q'TY |
| 1 | 310500287 | 左前封板 | Cover | 1 | | | | | |
| 2 | 805000727 | 螺栓 M10×25 | Bolt | 21 | | | | | |
| 3 | 805300014 | 垫圈 10 | Washer | 23 | | | | | |
| 4 | 805300102 | 垫圈 10 | Washer | 23 | | | | | |
| 5 | 310500291 | 侧封板 | Cover | 1 | | | | | |
| 6 | 310500292 | 海绵 | Sponge | 1 | | | | | |
| 7 | 310500293 | 海绵 | Sponge | 1 | | | | | |
| 8 | 310500290 | 海绵 | Sponge | 1 | | | | | |
| 9 | 310500306 | 角钢 | Angle iron | 1 | | | | | |
| 10 | 310500284 | 连接板 | Link | 1 | | | | | |
| 11 | 310500625 | 左后封板 | Cover | 1 | | | | | |
| 12 | 310500286 | 左后框架 | Frame | 1 | | | | | |
| 13 | 310500278 | 左前框架 | Frame | 1 | | | | | |
| 14 | 310500307 | 加强板 | Reinforce plate | 1 | | | | | |
| 15 | 310500289 | 海绵 | Sponge | 1 | | | | | |
| 16 | 310500288 | 海绵 | Sponge | 1 | | | | | |
| 17 | 805000062 | 螺栓 M10×35 | Bolt | 2 | | | | | |

# 机棚总成

Protector

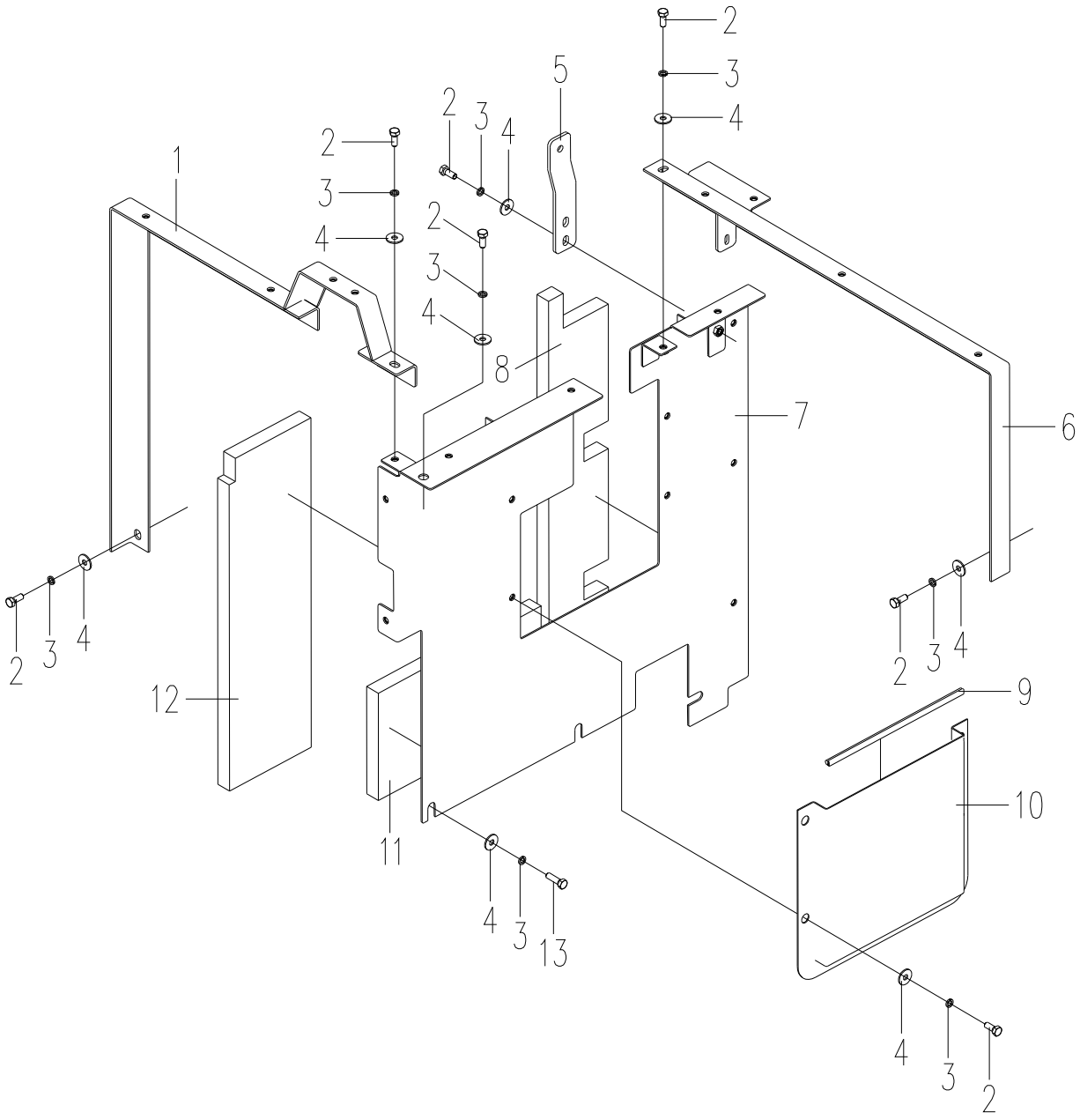

## 机棚总成 Protector

| 序号 ITEM | 零件代号 Part No | 零件名 | PART NAME | 数量 Q'TY | 服务代码 S.C | 适用机号 SERIAL NO | 互换性 IA | 替换零件 REPLACEABLE PART | |
|---|---|---|---|---|---|---|---|---|---|
| | | | | | | | | 零件代号 Part No | 数量 Q'TY |
| 1 | 310500283 | 后框架 | Frame | 1 | | | | | |
| 2 | 805000727 | 螺栓 M10×25 | Bolt | 12 | | | | | |
| 3 | 805300014 | 垫圈 10 | Washer | 14 | | | | | |
| 4 | 805300102 | 垫圈 10 | Washer | 14 | | | | | |
| 5 | 310500304 | 机罩支撑安装板 | Plant | 1 | | | | | |
| 6 | 310500295 | 前框架 | Frame | 1 | | | | | |
| 7 | 310500571 | 中封板 | Cover | 1 | | | | | |
| 8 | 310500297 | 海绵 | Sponge | 1 | | | | | |
| 9 | 801906291 | 密封条 L=0.33 米 | Seal | 1 | | | | | |
| 10 | 310501038 | 左中封板 | Cover | 1 | | | | | |
| 11 | 310500298 | 海绵 | Sponge | 1 | | | | | |
| 12 | 310500299 | 海绵 | Sponge | 1 | | | | | |
| 13 | 805000062 | 螺栓 M10×35 | Bolt | 2 | | | | | |

# 机棚总成

Protector

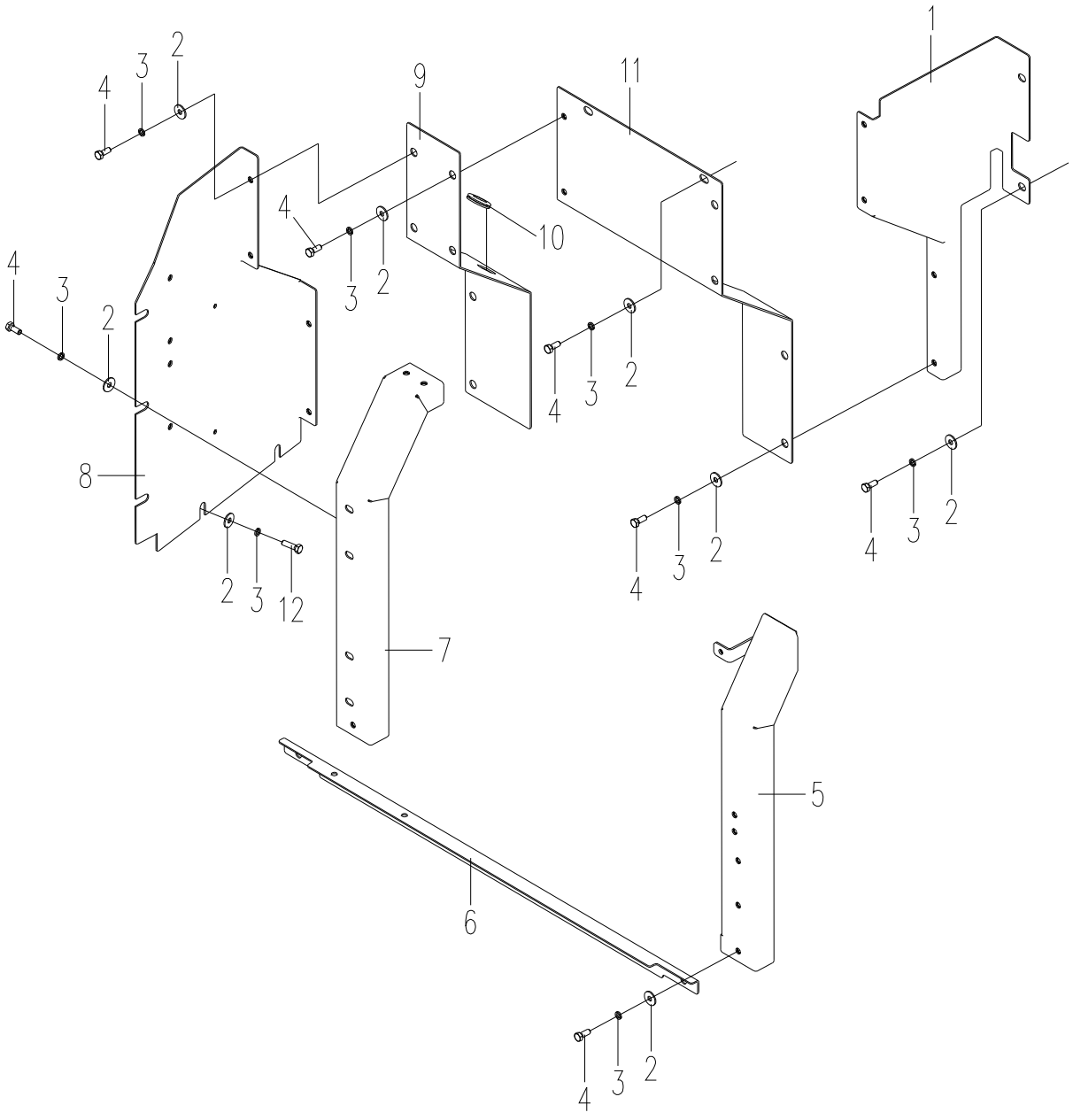

## 机棚总成 Protector

| 序号 ITEM | 零件代号 Part No | 零件名 | PART NAME | 数量 Q'TY | 服务代码 S.C | 适用机号 SERIAL NO | 互换性 IA | 替换零件 REPLACEABLE PART | |
|---|---|---|---|---|---|---|---|---|---|
| | | | | | | | | 零件代号 Part No | 数量 Q'TY |
| 1 | 310500301 | 右封板 | Cover | 1 | | | | | |
| 2 | 805300102 | 垫圈 10 | Washer | 21 | | | | | |
| 3 | 805300014 | 垫圈 10 | Washer | 21 | | | | | |
| 4 | 805000727 | 螺栓 M10×25 | Bolt | 19 | | | | | |
| 5 | 310500302 | 右前框架 | Frame | 1 | | | | | |
| 6 | 310500305 | 加强板 | Reinforce Plate | 1 | | | | | |
| 7 | 310500280 | 右后框架 | Frame | 1 | | | | | |
| 8 | 310501223 | 封板 | Cover | 1 | | | | | |
| 9 | 310501222 | 右侧封板 | Cover | 1 | | | | | |
| 10 | 312601098 | 护套 | Rubber | 1 | | | | | |
| 11 | 310500303 | 右侧封板 | Cover | 1 | | | | | |
| 12 | 805000062 | 螺栓 M10×35 | Bolt | 2 | | | | | |

# 工具箱
# Tool Cover

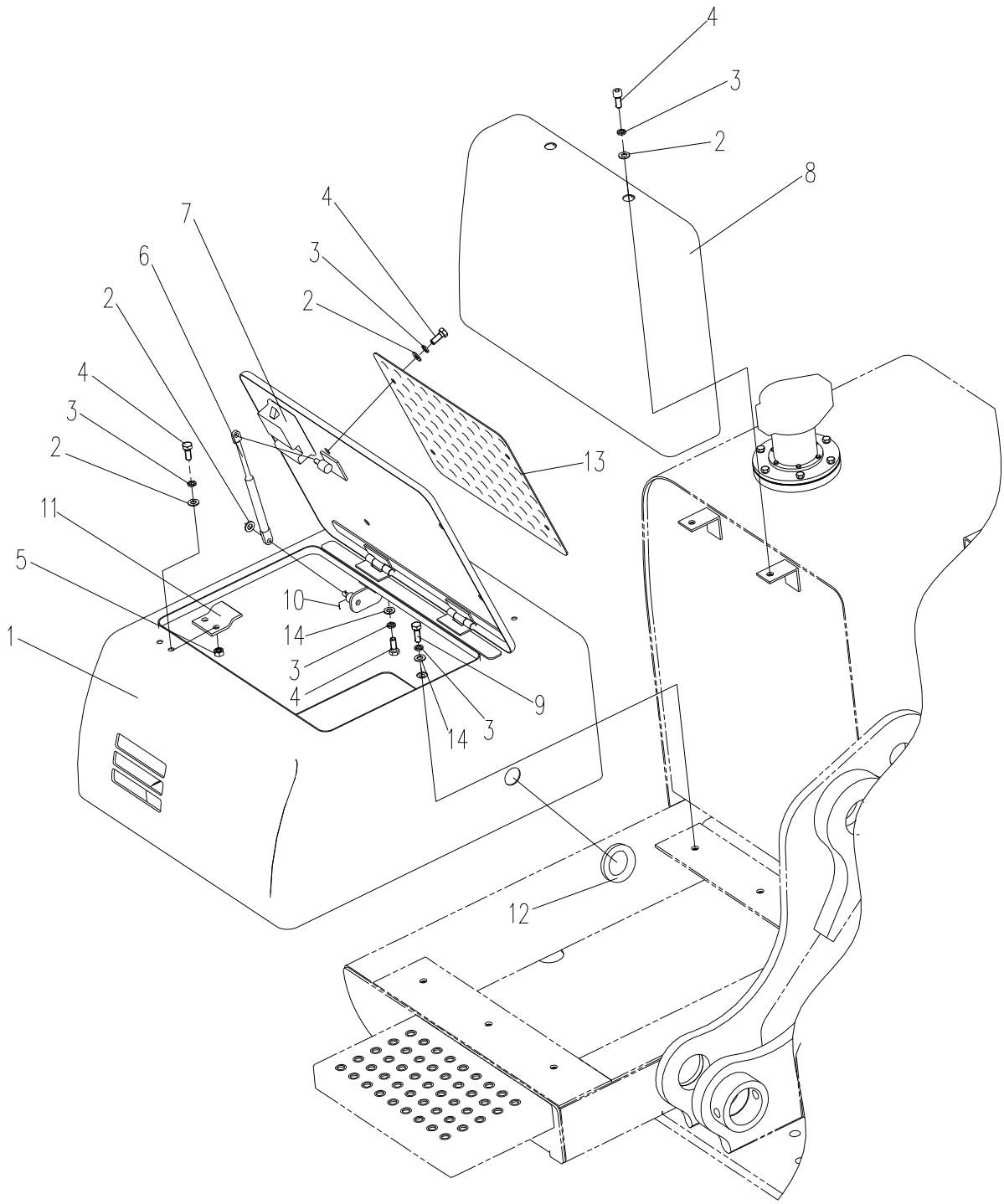

工具箱 Tool Cover

| 序号 ITEM | 零件代号 Part No | 零件名 | PART NAME | 数量 Q'TY | 服务代码 S.C | 适用机号 SERIAL NO | 互换性 IA | 替换零件 REPLACEABLE PART | |
|---|---|---|---|---|---|---|---|---|---|
| | | | | | | | | 零件代号 Part No | 数量 Q'TY |
| 1 | 310500854 | 下罩 | Down Protector | 1 | | | | | |
| 2 | 805300017 | 垫圈 10 | Washer | 10 | | | | | |
| 3 | 805300014 | 垫圈 10 | Washer | 16 | | | | | |
| 4 | 805000727 | 螺栓 M10×25 | Bolt | 14 | | | | | |
| 5 | 805200048 | 螺母 M10 | Nut | 2 | | | | | |
| 6 | 801702818 | 气弹簧 | Gas Cylinder | 1 | | | | | |
| 7 | 801503919 | 锁 | Lock | 1 | | | | | |
| 8 | 310500851 | 上罩 | Up Protector | 1 | | | | | |
| 9 | 805005196 | 螺栓 M10×30 | Bolt | 6 | | | | | |
| 10 | 805603791 | 开口销 2×18 | Pin | 2 | | | | | |
| 11 | 310500871 | 锁扣 | Lock | 1 | | | | | |
| 12 | 310500119 | 护套 | Jacket | 1 | | | | | |
| 13 | 310500872 | 防滑板 | Cover | 1 | | | | | |
| 14 | 805300102 | 垫圈 10 | Bolt | 8 | | | | | |

# 扶手
# Stay

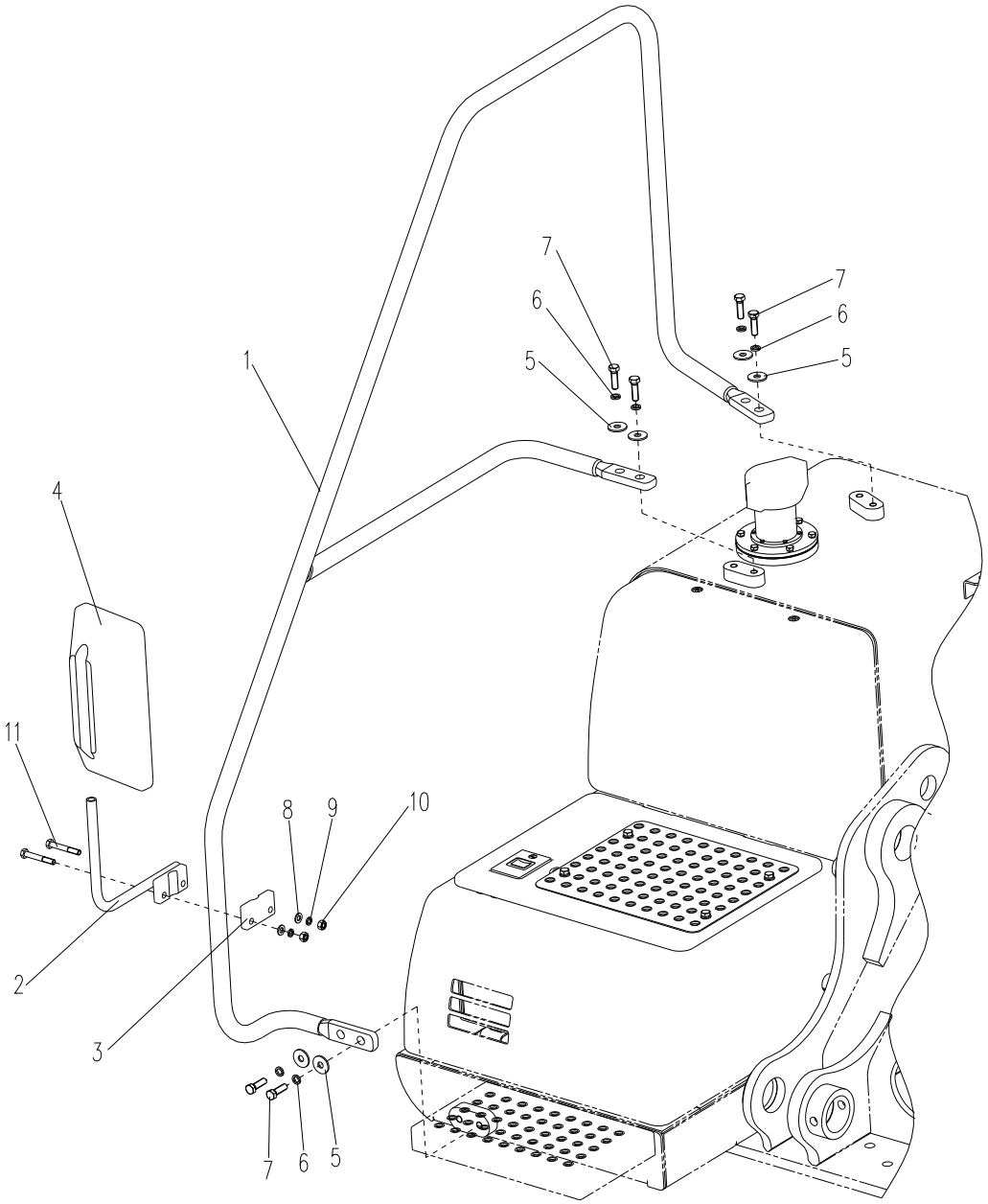

扶手 Stay

| 序号 ITEM | 零件代号 Part No | 零件名 | PART NAME | 数量 Q'TY | 服务代码 S.C | 适用机号 SERIAL NO | 互换性 IA | 替换零件 REPLACEABLE PART | |
|---|---|---|---|---|---|---|---|---|---|
| | | | | | | | | 零件代号 Part No | 数量 Q'TY |
| 1 | 310500241 | 扶手总成 | Stay | 1 | | | | | |
| 2 | 310500242 | 支架 | Stay | 1 | | | | | |
| 3 | 310500243 | 连接块 | Clamp | 1 | | | | | |
| 4 | 801905474 | 外后视镜 | Mirror | 1 | | | | | |
| 5 | 805300113 | 垫圈 12 | Washer | 6 | | | | | |
| 6 | 805300018 | 垫圈 12 | Washer | 6 | | | | | |
| 7 | 805000045 | 螺栓 M12×40 | Bolt | 6 | | | | | |
| 8 | 805300017 | 垫圈 10 | Washer | 2 | | | | | |
| 9 | 805300014 | 垫圈 10 | Washer | 2 | | | | | |
| 10 | 805200048 | 螺母 M10 | Nut | 2 | | | | | |
| 11 | 805000076 | 螺栓 M10×70 | Bolt | 2 | | | | | |

# 驾驶室总成
## Cab Assy

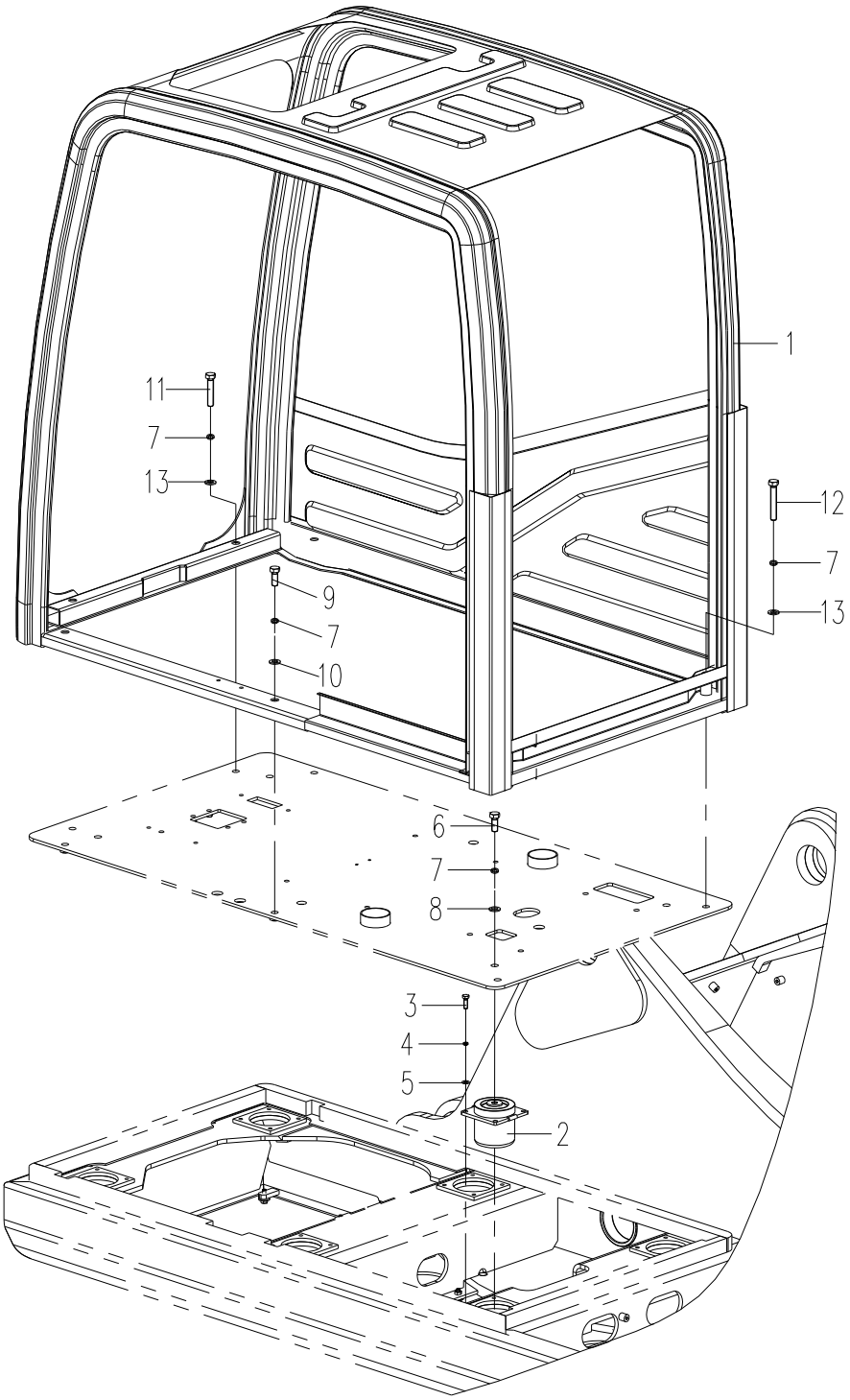

## 驾驶室总成 Cab Assy

| 序号 ITEM | 零件代号 Part No | 零件名 | PART NAME | 数量 Q'TY | 服务代码 S.C | 适用机号 SERIAL NO | 互换性 IA | 替换零件 REPLACEABLE PART | |
|---|---|---|---|---|---|---|---|---|---|
| | | | | | | | | 零件代号 Part No | 数量 Q'TY |
| 1 | 819908908 | 驾驶室 | Cab | 1 | | | | | |
| 2 | 801905542 | 减震垫 | Buffer Case | 6 | | | | | |
| 3 | 805000062 | 螺栓 M10×35 | Bolt | 24 | | | | | |
| 4 | 805300014 | 垫圈 10 | Washer | 24 | | | | | |
| 5 | 805300017 | 垫圈 10 | Washer | 24 | | | | | |
| 6 | 805000026 | 螺栓 M16×45 | Bolt | 6 | | | | | |
| 7 | 805300011 | 垫圈 16 | Washer | 12 | | | | | |
| 8 | 805300111 | 垫圈 16 | Washer | 6 | | | | | |
| 9 | 805000051 | 螺栓 M16×40 | Bolt | 2 | | | | | |
| 10 | 805302498 | 垫圈 16(300HV) | Washer | 2 | | | | | |
| 11 | 805000092 | 螺栓 M16×80 | Bolt | 2 | | | | | |
| 12 | 805000217 | 螺栓 M16×100 | Bolt | 2 | | | | | |
| 13 | 805302502 | 垫圈 16 | Washer | 4 | | | | | |

# 驾驶室总成
# Cab Assy

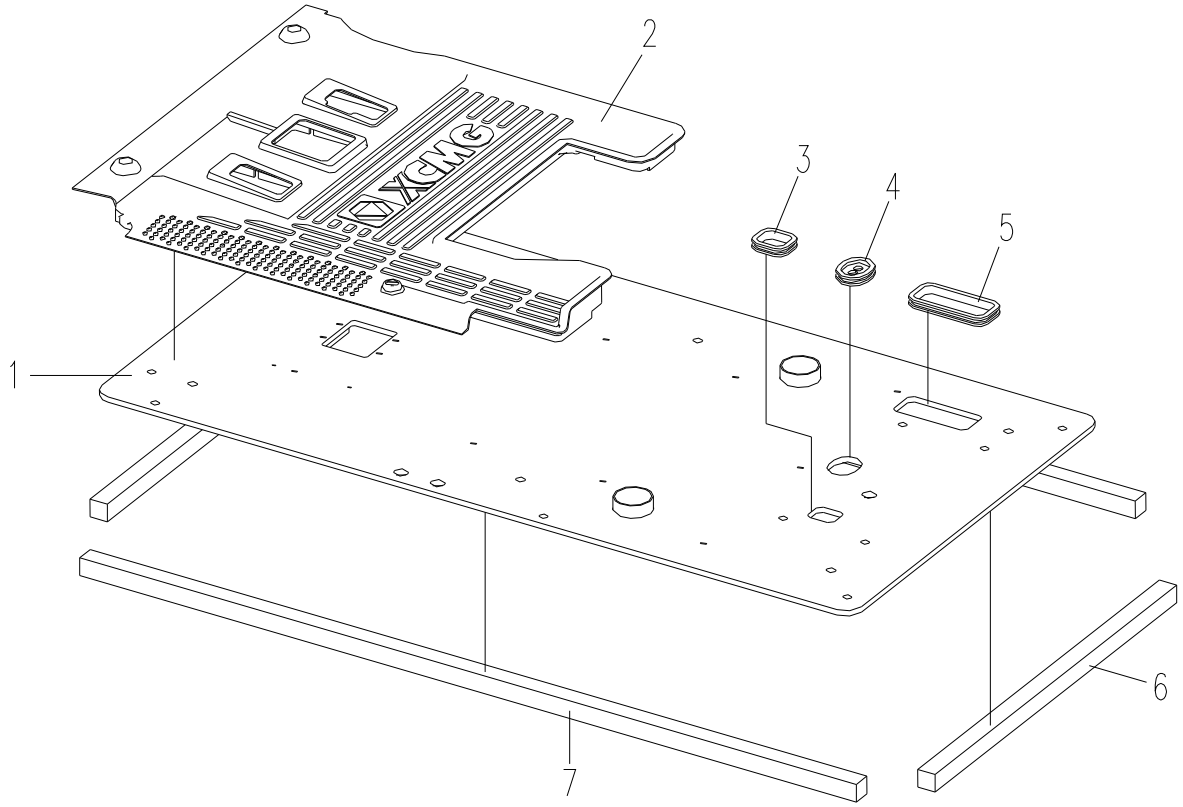

## 驾驶室总成 Cab Assy

| 序号 ITEM | 零件代号 Part No | 零件名 | PART NAME | 数量 Q'TY | 服务代码 S.C | 适用机号 SERIAL NO | 互换性 IA | 替换零件 REPLACEABLE PART | |
|---|---|---|---|---|---|---|---|---|---|
| | | | | | | | | 零件代号 Part No | 数量 Q'TY |
| 1 | 310500103 | 底板 | Floor | 1 | | | | | |
| 2 | 801906314 | 橡胶垫板 | Rubber Mat | 1 | | | | | |
| 3 | 310500113 | 护套(三) | Rubber Guard | 1 | | | | | |
| 4 | 310500112 | 护套(二) | Rubber Guard | 1 | | | | | |
| 5 | 310500111 | 护套(一) | Rubber Guard | 1 | | | | | |
| 6 | 310500116 | 密封条 | Seal | 2 | | | | | |
| 7 | 310500115 | 密封条 | Seal | 2 | | | | | |

# 驾驶室总成
## Cab Assy

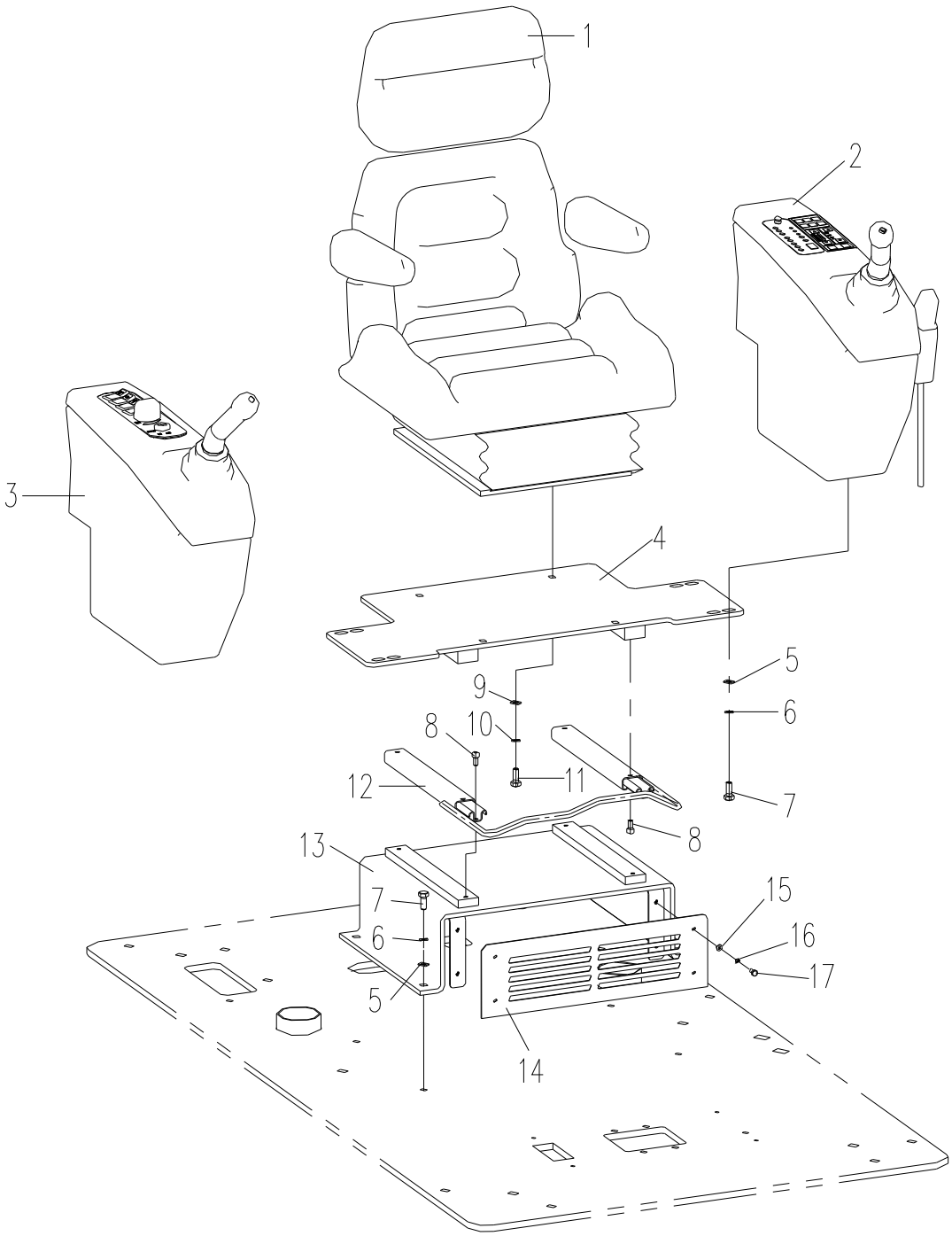

## 驾驶室总成 Cab Assy

| 序号 ITEM | 零件代号 Part No | 零件名 | PART NAME | 数量 Q'TY | 服务代码 S.C | 适用机号 SERIAL NO | 互换性 IA | 替换零件 REPLACEABLE PART | |
|---|---|---|---|---|---|---|---|---|---|
| | | | | | | | | 零件代号 Part No | 数量 Q'TY |
| 1 | 801905512 | 座椅 | Seat | 1 | | | | | |
| 2 | 819908910 | 左扶手箱 | Left Console | 1 | | | | | |
| 3 | 819908909 | 右扶手箱 | Right Console | 1 | | | | | |
| 4 | 310600063 | 上支架 | Bracket | 1 | | | | | |
| 5 | 805300017 | 垫圈 10 | Washer Plane | 12 | | | | | |
| 6 | 805300014 | 垫圈 10 | Washer Spring | 12 | | | | | |
| 7 | 805000727 | 螺栓 M10×25 | Bolt | 12 | | | | | |
| 8 | 805103584 | 螺钉 M8×16 | Bolt | 4 | | | | | |
| 9 | 805300117 | 垫圈 8 | Washer | 4 | | | | | |
| 10 | 805300010 | 垫圈 8 | Washer | 4 | | | | | |
| 11 | 805000017 | 螺栓 M8×25 | Bolt | 4 | | | | | |
| 12 | 801905673 | 滑轨套件 | Slider | 1 | | | | | |
| 13 | 310600062 | 下支架 | Bracket | 1 | | | | | |
| 14 | 310600061 | 封板 | Cover | 1 | | | | | |
| 15 | 805302506 | 垫圈 6 | Washer | 4 | | | | | |
| 16 | 805300030 | 垫圈 6 | Washer | 4 | | | | | |
| 17 | 805000322 | 螺栓 M6×16 | Bolt | 4 | | | | | |

# 驾驶室总成
Cab Assy

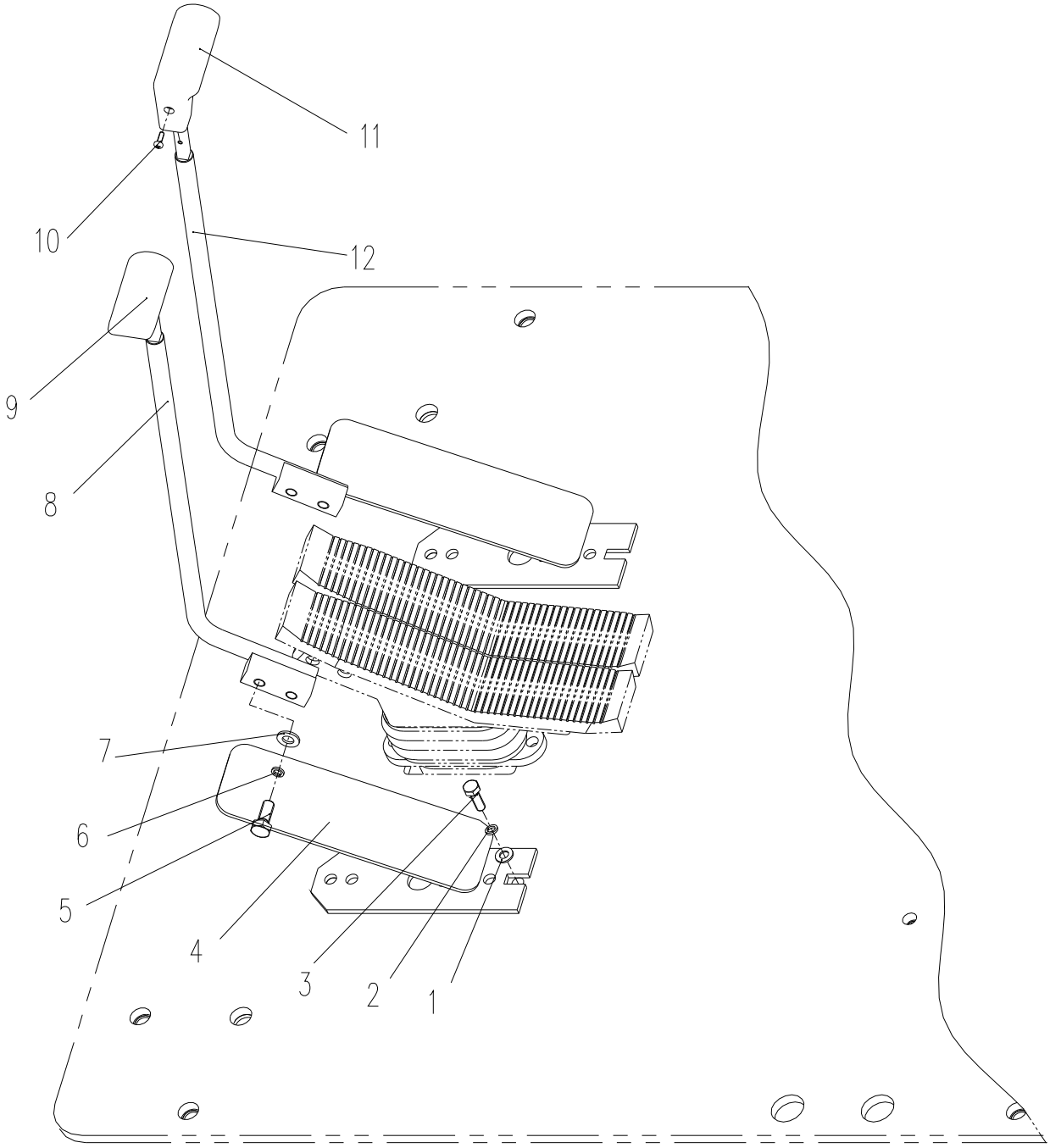

## 驾驶室总成 Cab Assy

| 序号 ITEM | 零件代号 Part No | 零件名 | PART NAME | 数量 Q'TY | 服务代码 S.C | 适用机号 SERIAL NO | 互换性 IA | 替换零件 REPLACEABLE PART | |
|---|---|---|---|---|---|---|---|---|---|
| | | | | | | | | 零件代号 Part No | 数量 Q'TY |
| 1 | 805300117 | 垫圈 8 | Washer | 4 | | | | | |
| 2 | 805300010 | 垫圈 8 | Washer | 4 | | | | | |
| 3 | 805002097 | 螺栓 M8X25 | Bolt | 4 | | | | | |
| 4 | 819908842 | 踏板 | Pedal | 2 | | | | | |
| 5 | 805000727 | 螺栓 M10X25 | Bolt | 4 | | | | | |
| 6 | 805300014 | 垫圈 10 | Washer | 4 | | | | | |
| 7 | 805300017 | 垫圈 10 | Washer | 4 | | | | | |
| 8 | 314000068 | 左杆 | Lever(L) | 1 | | | | | |
| 9 | 819908627 | 左手柄 | Left Grip | 1 | | | | | |
| 10 | 805100273 | 螺钉 M5X12 | Screw | 2 | | | | | |
| 11 | 819908626 | 右手柄 | Right Grip | 1 | | | | | |
| 12 | 314000066 | 右杆 | Lever(R) | 1 | | | | | |

# 驾驶室总成
# Cab Assy

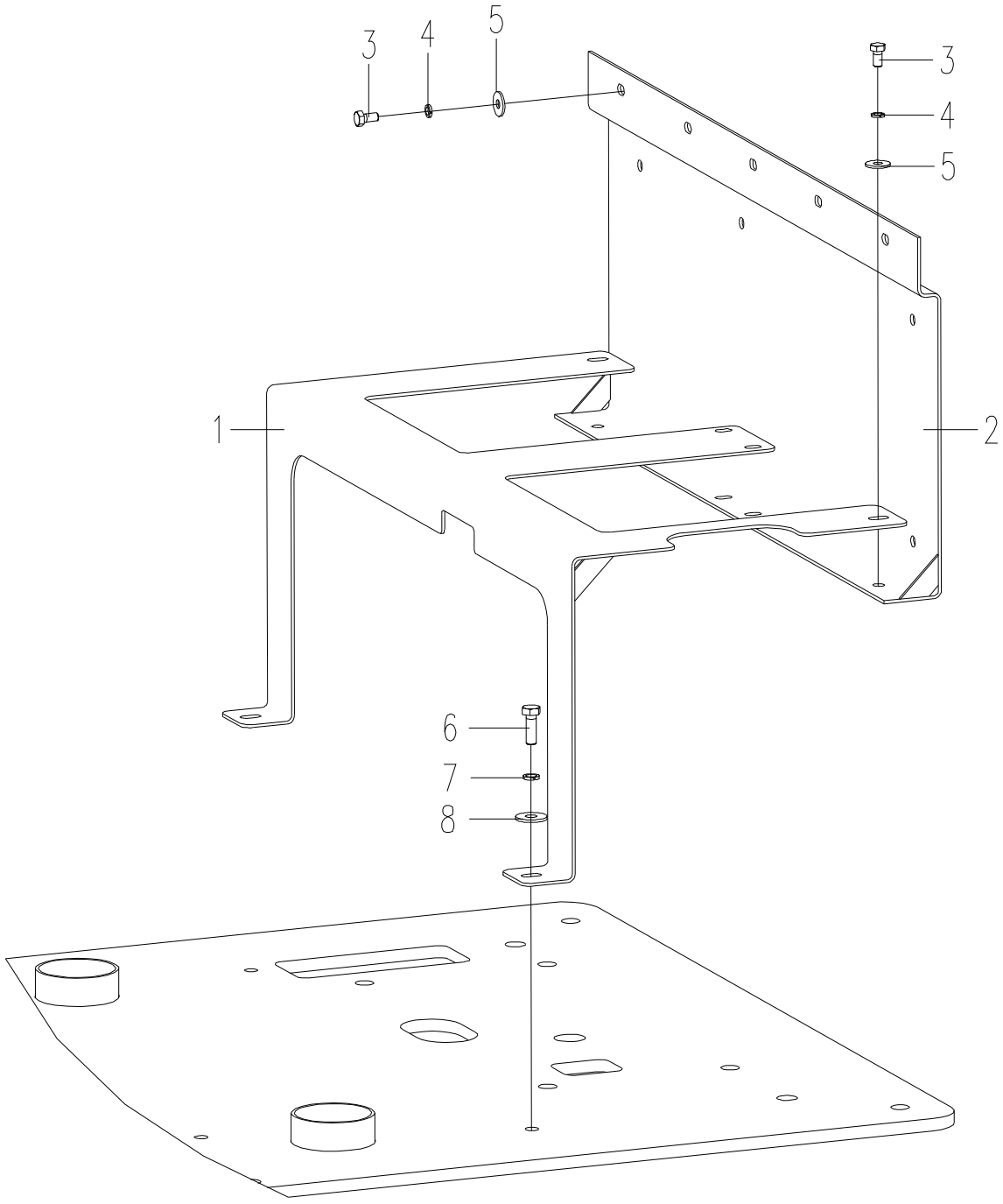

## 驾驶室总成 Cab Assy

| 序号 ITEM | 零件代号 Part No | 零件名 | PART NAME | 数量 Q'TY | 服务代码 S.C | 适用机号 SERIAL NO | 互换性 IA | 替换零件 REPLACEABLE PART | |
|---|---|---|---|---|---|---|---|---|---|
| | | | | | | | | 零件代号 Part No | 数量 Q'TY |
| 1 | 310500105 | 支架 | Bracket | 1 | | | | | |
| 2 | 310500106 | 支架 | Bracket | 1 | | | | | |
| 3 | 805000033 | 螺栓 M8×16 | Bolt | 9 | | | | | |
| 4 | 805300010 | 垫圈 8 | Washer Spring | 9 | | | | | |
| 5 | 805300117 | 垫圈 8 | Washer Plane | 9 | | | | | |
| 6 | 805000043 | 螺栓 M10×30 | Bolt | 2 | | | | | |
| 7 | 805300014 | 垫圈 10 | Washer Spring | 2 | | | | | |
| 8 | 805300102 | 垫圈 10 | Washer Plane | 2 | | | | | |

# 驾驶室
Cab

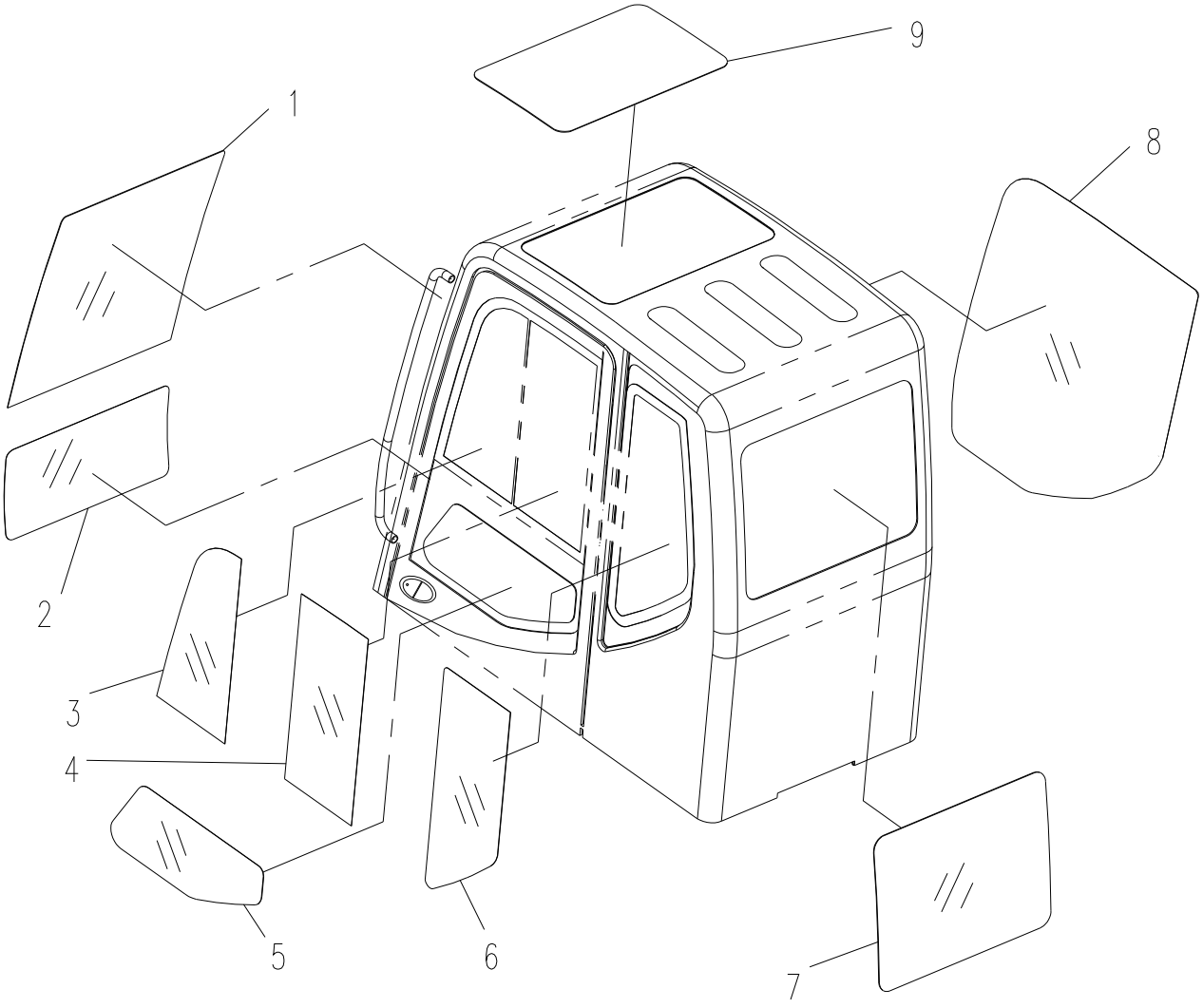

驾驶室 Cab

| 序号 ITEM | 零件代号 Part No | 零件名 | PART NAME | 数量 Q'TY | 服务代码 S.C | 适用机号 SERIAL NO | 互换性 IA | 替换零件 REPLACEABLE PART | |
|---|---|---|---|---|---|---|---|---|---|
| | | | | | | | | 零件代号 Part No | 数量 Q'TY |
| 1 | 802103356 | 前上玻璃 | Glass,front,up | 1 | | | | | |
| 2 | 802103357 | 前下玻璃 | Glass,front,lower | 1 | | | | | |
| 3 | 802103358 | 车门上前玻璃 | Glass,door,front,up | 1 | | | | | |
| 4 | 802103359 | 车门上后玻璃 | Glass,door,back,up | 1 | | | | | |
| 5 | 802103360 | 车门下玻璃 | Glass,door,lower | 1 | | | | | |
| 6 | 802103363 | 左侧后玻璃 | Glass,back,left | 1 | | | | | |
| 7 | 802103362 | 后侧玻璃 | Glass,back | 1 | | | | | |
| 8 | 802103364 | 右侧玻璃 | Glass,right | 1 | | | | | |
| 9 | 802103361 | 顶窗玻璃 | Glass,top | 1 | | | | | |
| 10 | 802103461 | （车门）定位锁总成 | Alignment pin assembly | 1 | | | | | |
| 11 | 802103451 | 后部空调罩总成 | Back cover | 1 | | | | | |
| 12 | 801504203 | 驾驶室门锁 | Lock Door | 1 | | | | | |
| 13 | 802103468 | 前（上）挡风玻璃（窗）总成 | Glass | 1<br>1 | | | | | |
| 14 | 802103466 | 驾驶室门总成 | Door | 1 | | | | | |
| 15 | 802103478 | 左侧推拉窗总成 | Window | 1 | | | | | |
| 16 | 802102363 | 车门定位锁 | Alignment pin | 1 | | | | | |
| 17 | 802102364 | 驾驶室门锁 | Lock Door | 1 | | | | | |
| 18 | 802102365 | 驾驶室内饰灯 | Lamp | 1 | | | | | |
| 19 | 802102366 | 驾驶室内饰灯灯泡 | Lamp globe | 1 | | | | | |
| 20 | 802102367 | 驾驶室气弹簧 | Air Spring | 1 | | | | | |
| 21 | 802102368 | 驾驶室顶窗锁扣 | Locking clipper | 1 | | | | | |
| 22 | 802102369 | 驾驶室雨刮器总成 | Windscreen wiper | 1 | | | | | |
| 23 | 802102370 | 驾驶室刮片支架（含刮片） | Blank holder (slice) | 1 | | | | | |
| 24 | 802102371 | 驾驶室门防碰球 | Stopper | 1 | | | | | |
| 25 | 801905609 | 驾驶室后视镜 | Mirror | 1 | | | | | |
| 26 | 802102372 | 驾驶室平衡器 | Balancer | 1 | | | | | |
| 27 | 802102373 | 驾驶室喷水嘴 | Blowhole | 1. | | | | | |
| 28 | 802102374 | 驾驶室天线 | Antenna | 1 | | | | | |
| 29 | 802102375 | 驾驶室窗扣 | Window clipper | 1 | | | | | |
| 30 | 802102338 | 驾驶室门总成 | Door | 1 | | | | | |
| 31 | 802103381 | 前上挡锁扣总成 | Locking clipper | 1 | | | | | |
| 32 | 819909273 | 喷水壶总成（含喷水电机） | Sprinkler | 1. | | | | | |
| 33 | 802103421 | 前挡风玻璃周圈密封胶条 | Seal | 1 | | | | | |

# 驾驶室
Cab

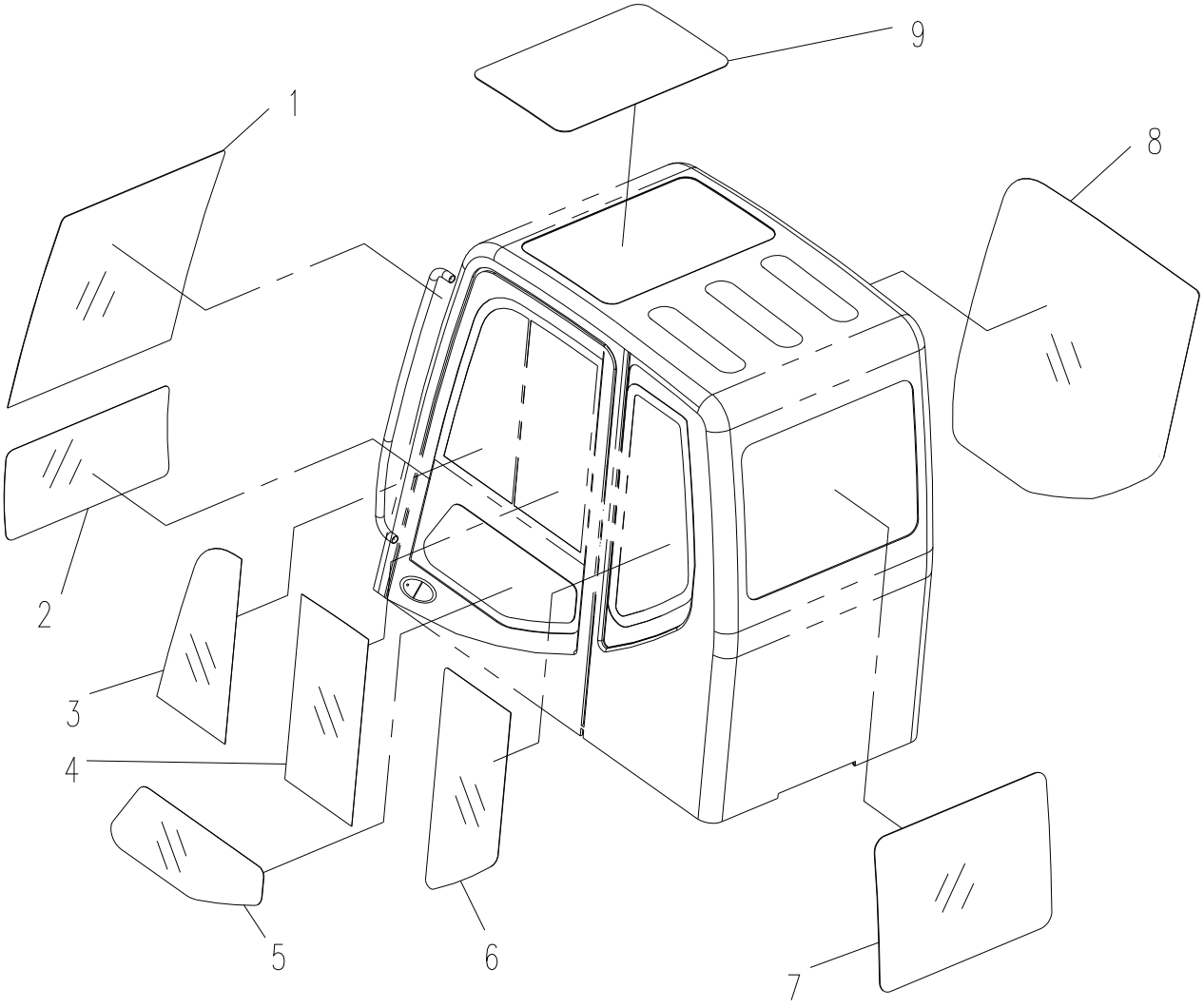

驾驶室 Cab

| 序号 ITEM | 零件代号 Part No | 零件名 | PART NAME | 数量 Q'TY | 服务代码 S.C | 适用机号 SERIAL NO | 互换性 IA | 替换零件 REPLACEABLE PART | |
|---|---|---|---|---|---|---|---|---|---|
| | | | | | | | | 零件代号 Part No | 数量 Q'TY |
| 34 | 802103422 | 前挡风玻璃中间密封胶条 | Seal | 1 | | | | | |
| 35 | 802103423 | 前挡风玻璃底部密封胶条 | Seal | 1 | | | | | |
| 36 | 840505302 | 灭火器 | Fire extinguisher | 1 | | | | | |
| 37 | 840505303 | 逃生锤 | Escaped sinker | 1 | | | | | |
| 38 | 802103477 | 天窗总成 | Air window | 1 | | | | | |
| 39 | 802103417 | 驾驶室门铰链 | Hinge | 1 | | | | | |
| 40 | 802103382 | 定位锁装饰盖板 | Cover | 1 | | | | | |

# 发动机系统

Engine System

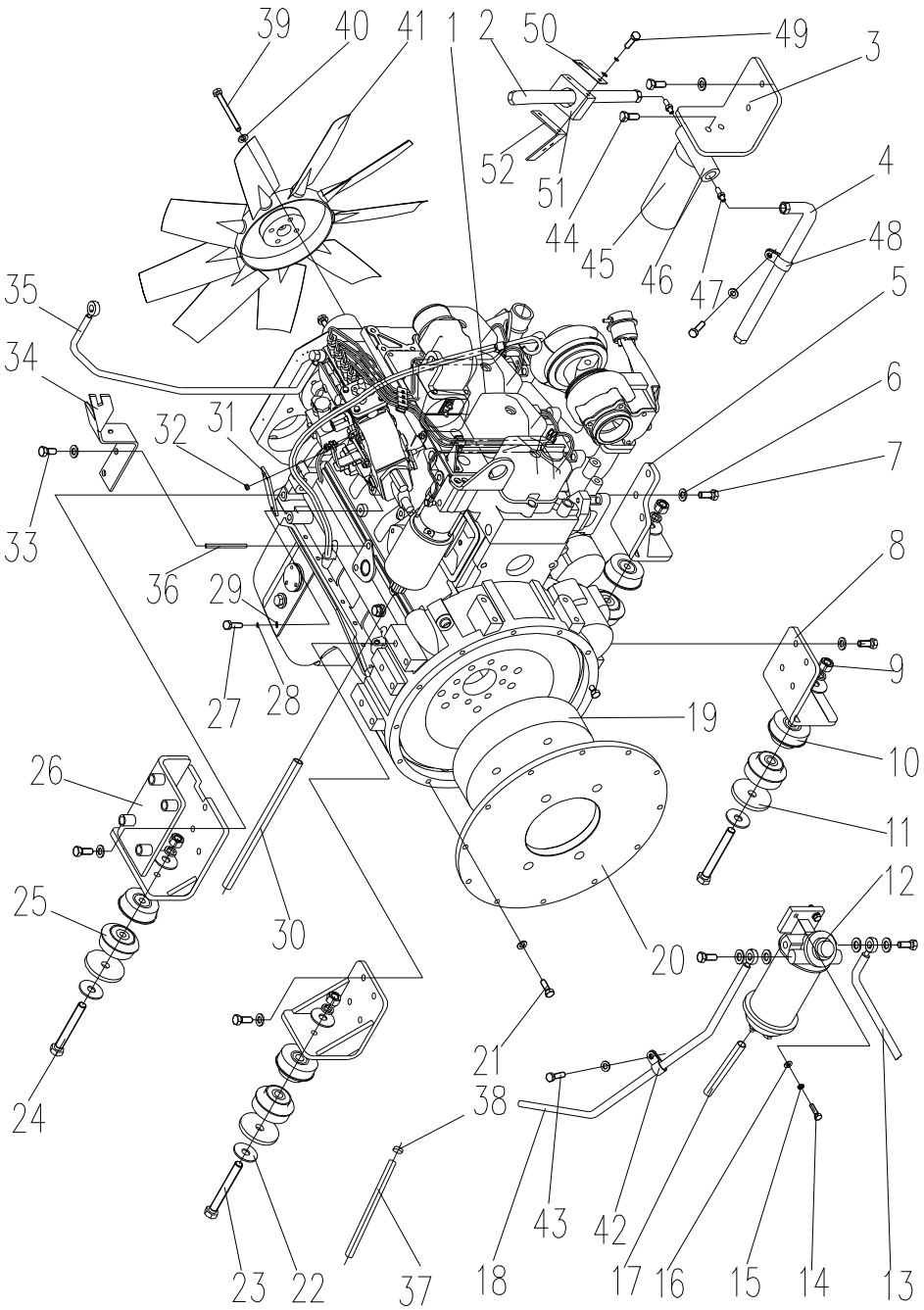

发动机系统 Engine System

| 序号 ITEM | 零件代号 Part No | 零件名 | PART NAME | 数量 Q'TY | 服务代码 S.C | 适用机号 SERIAL NO | 互换性 IA | 替换零件 REPLACEABLE PART | |
|---|---|---|---|---|---|---|---|---|---|
| | | | | | | | | 零件代号 Part No | 数量 Q'TY |
| 1 | 800104314 | 发动机总成 | Engine | 1 | | | | | |
| 2 | 800104250 | 机油软管 I | Oil pipe | 1 | | | | | |
| 3 | 800104244 | 护板 | Bracket | 1 | | | | | |
| 4 | 800104251 | 机油软管 II | Oil Pipe | 1 | | | | | |
| 5 | 310500374 | 右前支架 | Front bracket,Right | 1 | | | | | |
| 6 | 805302496 | 垫圈 12 | Washer | 16 | | | | | |
| 7 | 805000721 | 螺栓 M12×30 | Bolt | 14 | | | | | |
| 8 | 310500373 | 后支架 | Rear bracket | 2 | | | | | |
| 9 | 805203156 | 螺母 M16 | Nut | 4 | | | | | |
| 10 | 801905538 | 后减震器 | Cushion Rubber | 4 | | | | | |
| 11 | 310500377 | 垫板 | Washer | 4 | | | | | |
| 12 | 800101676 | 油水分离器 | Fuel/water separator | 1 | | | | | |
| 13 | 310500383 | 柴油进油管 | Fuel pipe | 1 | | | | | |
| 14 | 805000020 | 螺栓 M8×30 | Bolt | 4 | | | | | |
| 15 | 805300010 | 垫圈 8 | Washer | 7 | | | | | |
| 16 | 805300069 | 垫圈 8 | Washer | 7 | | | | | |
| 17 | 310500381 | 透明管 L=500 | Transparent pipe | 1 | | | | | |
| 18 | 310500382 | 柴油进油管 | Fuel pipe | 1 | | | | | |
| 19 | 800305441 | 联轴器 | Coupling | 1 | | | | | |
| 20 | 310500378 | 联接盘 | Plate | 1 | | | | | |
| 21 | 805000604 | 螺栓 M10×30 | Bolt | 9 | | | | | |
| 22 | 805302498 | 大垫圈 16 | Washer | 8 | | | | | |
| 23 | 819908644 | 螺栓 M16×130（10.9） | Bolt | 2 | | | | | |
| 24 | 805000053 | 螺栓 M16×120（10.9） | Bolt | 2 | | | | | |
| 25 | 801905539 | 前减震器 | Cushion Rubber | 4 | | | | | |
| 26 | 310500040 | 空调支架 | Bracket | 1 | | | | | |
| 27 | 805006265 | 螺栓 M6×20 | Bolt | 2 | | | | | |
| 28 | 805300030 | 垫圈 6 | Washer | 2 | | | | | |
| 29 | 805302506 | 垫圈 6 | Washer | 2 | | | | | |
| 30 | 803173231 | 管 LS-8×1.5×650 | Transparent pipe | 1 | | | | | |
| 31 | 310500375 | 板 | Plate | 1 | | | | | |
| 32 | 805200053 | 螺母 M6 | Nut | 2 | | | | | |
| 33 | 805001967 | 螺栓 M12×110（10.9） | Bolt | 2 | | | | | |
| 34 | 310500618 | 油门支架板 | Plate | 1 | | | | | |

# 发动机系统
# Engine System

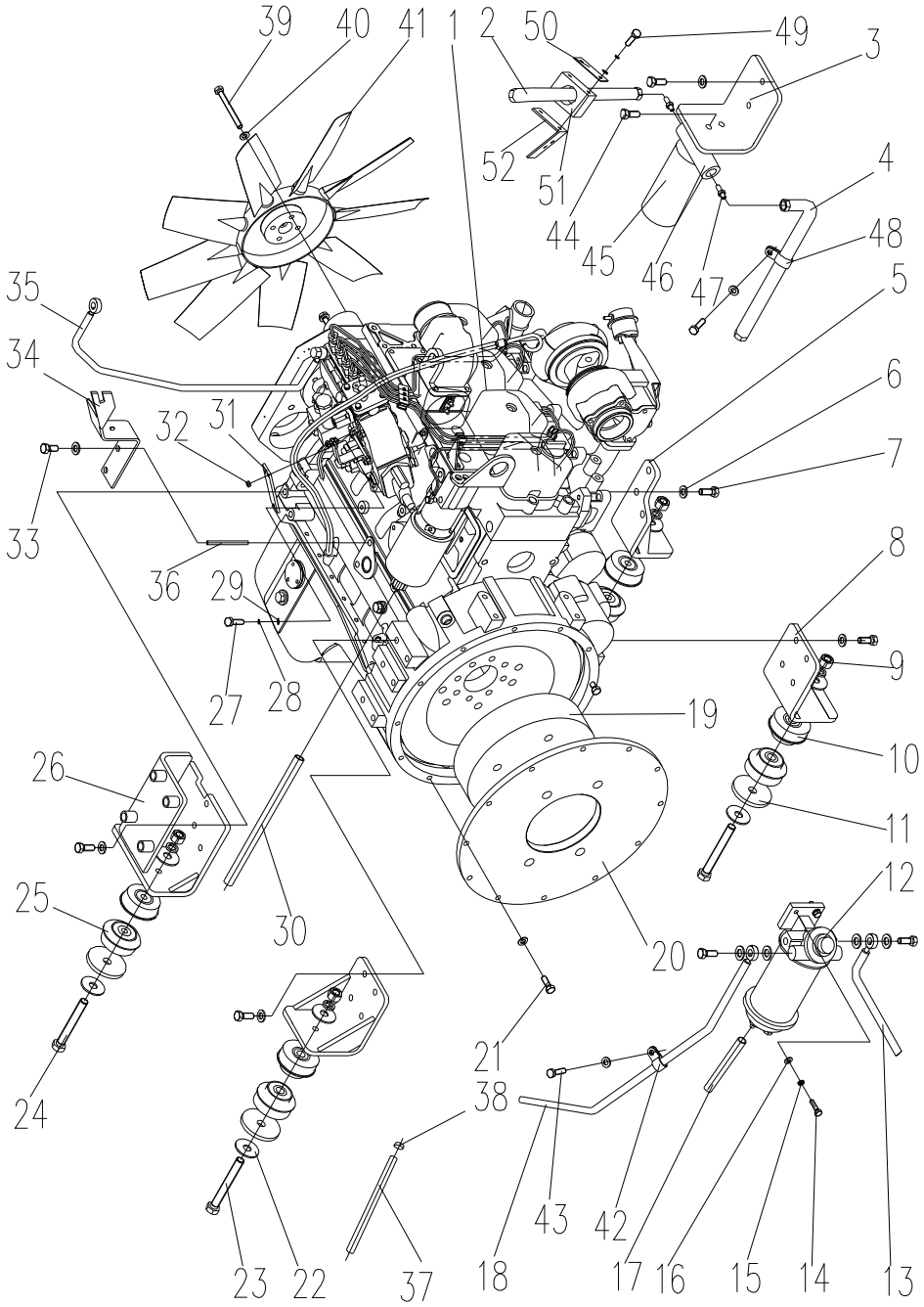

发动机系统 Engine System

| 序号 ITEM | 零件代号 Part No | 零件名 | PART NAME | 数量 Q'TY | 服务代码 S.C | 适用机号 SERIAL NO | 互换性 IA | 替换零件 REPLACEABLE PART | |
|---|---|---|---|---|---|---|---|---|---|
| | | | | | | | | 零件代号 Part No | 数量 Q'TY |
| 35 | 310500380 | 柴油回油管 | Fuel pipe | 35 | | | | | |
| 36 | 310500525 | 连接筒 | Steel tube | 36 | | | | | |
| 37 | 819908957 | 发动机机油管 | Pipe | 37 | | | | | |
| 38 | 803172657 | 喉箍 | Clamp | 38 | | | | | |
| 39 | 805004674 | 螺栓 M10×110 | Bolt | 39 | | | | | |
| 40 | 805302497 | 垫圈 10 | Washer | 40 | | | | | |
| 41 | 800104315 | 风扇 | Fan | 41 | | | | | |
| 42 | 801905480 | 单偏式带胶套卡箍 | Clamp | 42 | | | | | |
| 43 | 805004702 | 螺栓 M8×18 | Bolt | 43 | | | | | |
| 44 | 800104242 | 螺丝 108767 | Bolt | 44 | | | | | |
| 45 | 800104247 | 机油滤滤芯 3908615 | Cartridge | 45 | | | | | |
| 46 | 800104508 | 机油滤座 3923357 | Head | 46 | | | | | |
| 47 | 800104507 | 机油滤接头 3924567 | Connenctor | 47 | | | | | |
| 48 | 801905488 | 单偏式带胶套卡箍 | Clamp | 48 | | | | | |
| 49 | 805004679 | 螺栓 M6×70 | Bolt | 49 | | | | | |
| 50 | 310500715 | 盖板 | Plate | 50 | | | | | |
| 51 | 310500632 | 垫块 | Cushion | 51 | | | | | |
| 52 | 310500631 | 支架总成 | Bracket | 52 | | | | | |

# 发动机系统
# Engine System

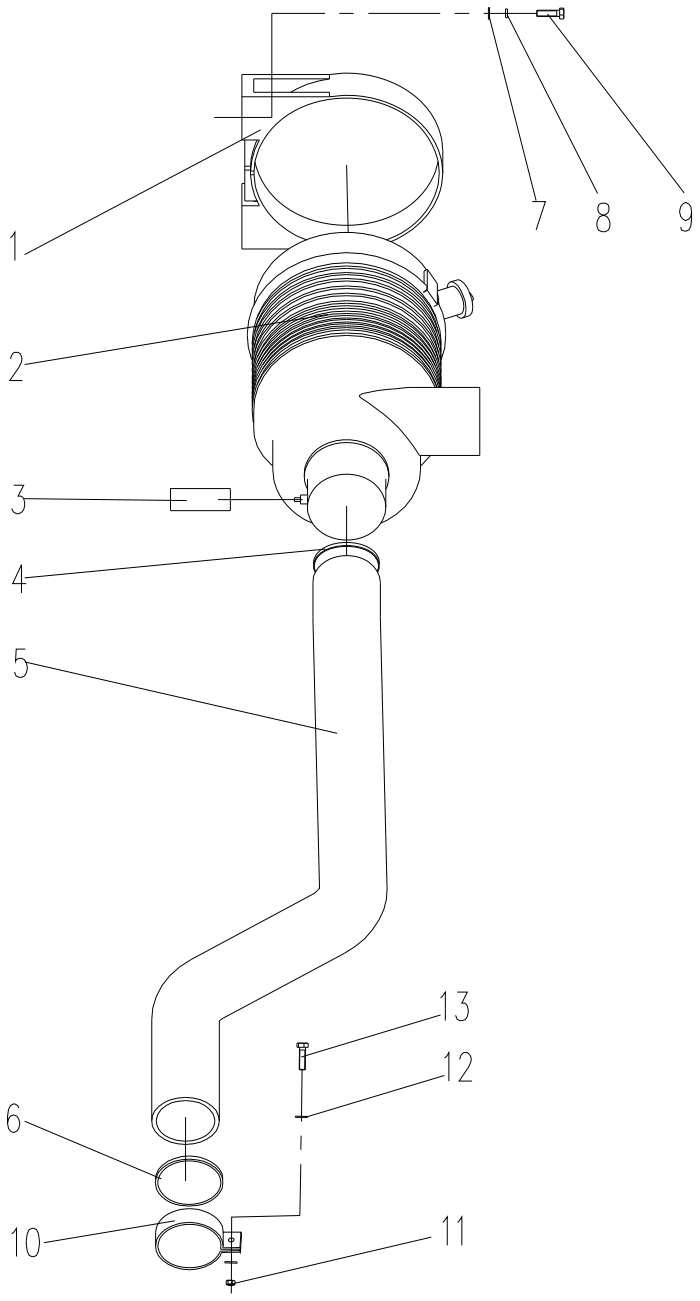

发动机系统 Engine System

| 序号 ITEM | 零件代号 Part No | 零件名 | PART NAME | 数量 Q'TY | 服务代码 S.C | 适用机号 SERIAL NO | 互换性 IA | 替换零件 REPLACEABLE PART | |
|---|---|---|---|---|---|---|---|---|---|
| | | | | | | | | 零件代号 Part No | 数量 Q'TY |
| 1 | 800104316 | 空滤器支架 P780532 | Bracket | 1 | | | | | |
| 2 | 800104317 | 空滤器 G090225 | Air Filter | 1 | | | | | |
| 3 | 819908974 | 压差报警器 X770062 | Indicator | 1 | | | | | |
| 4 | 801905460 | 双头强力卡箍 | Clamp | 1 | | | | | |
| 5 | 310500358 | 进气管 | Hose | 1 | | | | | |
| 6 | 801905541 | 卡箍 40D8390 | Clamp | 1 | | | | | |
| 7 | 805300069 | 垫圈 8 | Washer | 2 | | | | | |
| 8 | 805300010 | 垫圈 8 | Washer | 2 | | | | | |
| 9 | 805000020 | 螺栓 M8×30 | Bolt | 2 | | | | | |
| 10 | 800104505 | 单偏式带胶套卡箍 | Clamp | 1 | | | | | |
| 11 | 805203170 | 螺母 M8 | Nut | 1 | | | | | |
| 12 | 819908973 | 垫圈 8 | Washer | 1 | | | | | |
| 13 | 805002097 | 螺栓 M8×25（10.9） | Bolt | 1 | | | | | |

# 发动机系统
# Engine System

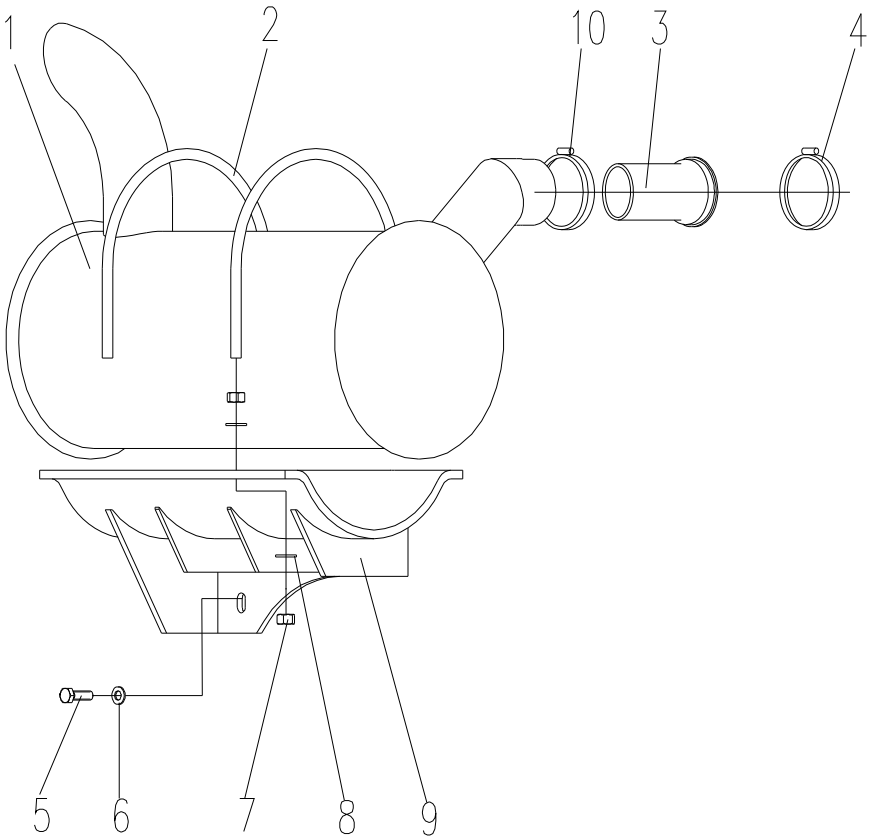

发动机系统 Engine System

| 序号 ITEM | 零件代号 Part No | 零件名 | PART NAME | 数量 Q'TY | 服务代码 S.C | 适用机号 SERIAL NO | 互换性 IA | 替换零件 REPLACEABLE PART | |
|---|---|---|---|---|---|---|---|---|---|
| | | | | | | | | 零件代号 Part No | 数量 Q'TY |
| 1 | 819908907 | 消声器 | Muffler | 1 | | | | | |
| 2 | 310500360 | U 型螺栓 | Bolt | 2 | | | | | |
| 3 | 819908975 | 消声器接管 | Hose | 1 | | | | | |
| 4 | 800104503 | V 型管夹 XS9009 | Clamp | 1 | | | | | |
| 5 | 805000679 | 螺栓 M10×35 | Bolt | 3 | | | | | |
| 6 | 805302497 | 垫圈 10 | Washer | 3 | | | | | |
| 7 | 805203158 | 螺母 M12 | Nut | 8 | | | | | |
| 8 | 805302878 | 垫圈 12 | Washer | 8 | | | | | |
| 9 | 310500013 | 消声器支架 | Muffler Bracket | 1 | | | | | |
| 10 | 800104504 | 紧箍 | Clamp | 1 | | | | | |

# 发动机系统
# Engine System

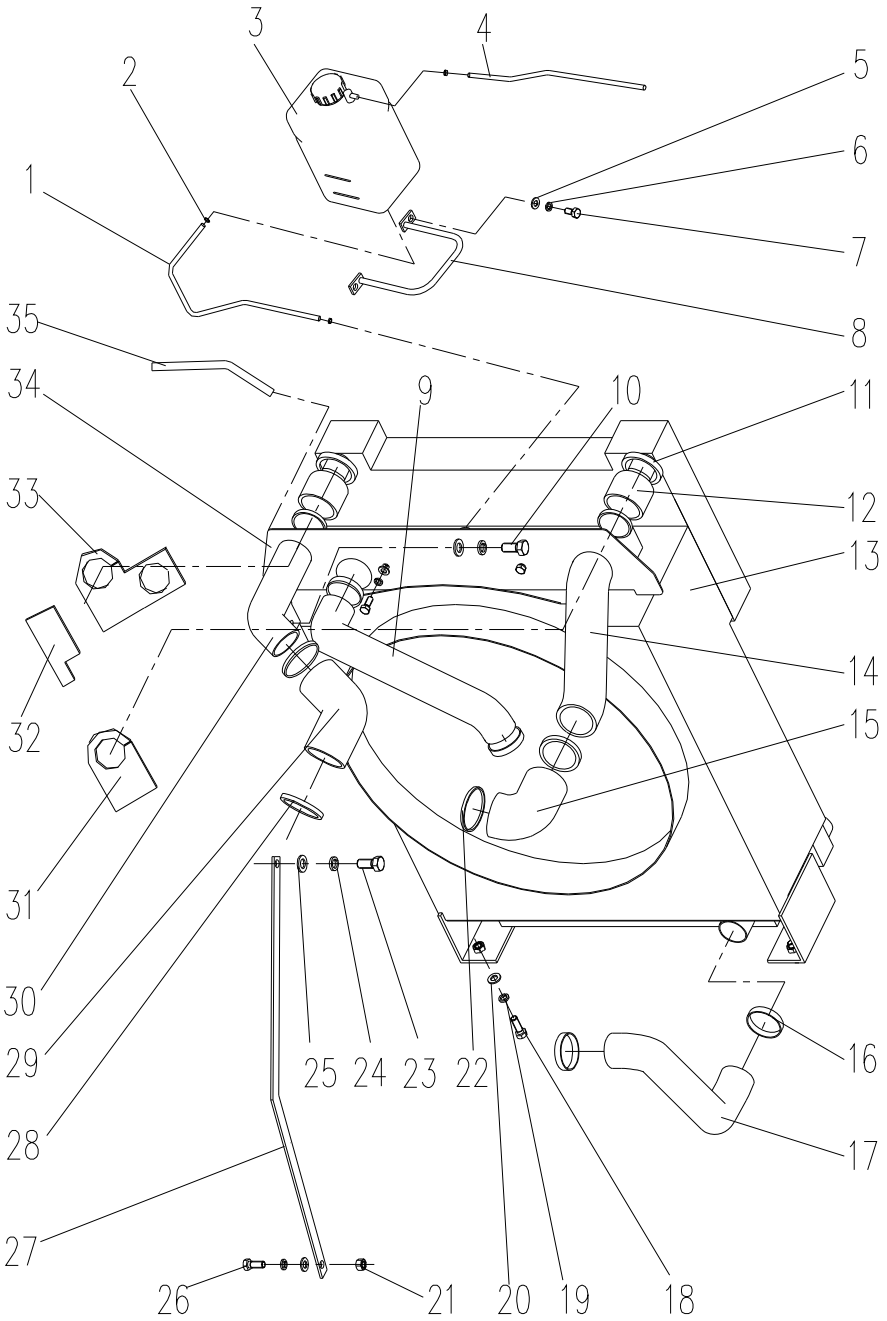

发动机系统 Engine System

| 序号 ITEM | 零件代号 Part No | 零件名 | PART NAME | 数量 Q'TY | 服务代码 S.C | 适用机号 SERIAL NO | 互换性 IA | 替换零件 REPLACEABLE PART | |
|---|---|---|---|---|---|---|---|---|---|
| | | | | | | | | 零件代号 Part No | 数量 Q'TY |
| 1 | 803172501 | 织物液压胶管 1-8L=1400mm | Hose | 1 | | | | | |
| 2 | 819908944 | 软管卡箍 01D91220 | Clamp | 3 | | | | | |
| 3 | 803504641 | 储液罐 FSX-130 | Reserve Bank | 1 | | | | | |
| 4 | 803172502 | 织物液压胶管 1-8L=450mm | Hose | 1 | | | | | |
| 5 | 805300017 | 垫圈 10 | Washer | 6 | | | | | |
| 6 | 805300014 | 垫圈 10 | Washer | 6 | | | | | |
| 7 | 805000714 | 螺栓 M10×20 | Bolt | 2 | | | | | |
| 8 | 310500368 | 储液罐支架 | Bracket | 1 | | | | | |
| 9 | 310500370 | 发动机出水管 | Hose | 1 | | | | | |
| 10 | 805000727 | 螺栓 M10×25 | Bolt | 4 | | | | | |
| 11 | 801905645 | T 型卡箍 | Clamp | 6 | | | | | |
| 12 | 310500364 | 管 | Hose | 2 | | | | | |
| 13 | 803007232 | 散热器总成 | Radiator ASM | 1 | | | | | |
| 14 | 310501172 | 钢管 | Steel tube | 1 | | | | | |
| 15 | 310500627 | 弯管 | Hose | 1 | | | | | |
| 16 | 819908915 | 卡箍 01D125070 | Clamp | 4 | | | | | |
| 17 | 310500371 | 发动机进水管 | Hose | 1 | | | | | |
| 18 | 805000048 | 螺栓 M12×35 | Bolt | 4 | | | | | |
| 19 | 805300018 | 垫圈 12 | Washer | 5 | | | | | |
| 20 | 805300020 | 垫圈 12 | Washer | 5 | | | | | |
| 21 | 805200049 | 螺母 M12 | Nut | 1 | | | | | |
| 22 | 801905540 | 卡箍 40D5765 | Clamp | 1 | | | | | |
| 23 | 805000013 | 螺栓 M16×35 | Bolt | 1 | | | | | |
| 24 | 805300011 | 垫圈 16 | Washer | 1 | | | | | |
| 25 | 805300020 | 垫圈 16 | Washer | 1 | | | | | |
| 26 | 805000716 | 螺栓 M12×30 | Bolt | 1 | | | | | |
| 27 | 310500379 | 拉杆 | Bracket,Left | 1 | | | | | |
| 28 | 801905541 | 卡箍 40D8390 | Clamp | 1 | | | | | |
| 29 | 310500365 | 弯管 | Hose | 1 | | | | | |
| 30 | 310500363 | 钢管 | Steel tube | 1 | | | | | |
| 31 | 310500523 | 带胶海绵 | Sponge | 1 | | | | | |
| 32 | 310500524 | 带胶海绵 | Sponge | 1 | | | | | |
| 33 | 310500014 | 带胶海绵 | Sponge | 1 | | | | | |
| 34 | 310500369 | 挡风板 | Baffle | 1 | | | | | |
| 35 | 801905536 | 密封条 | Airproof strip | 1 | | | | | |

# 柴油箱

Fuel Tank

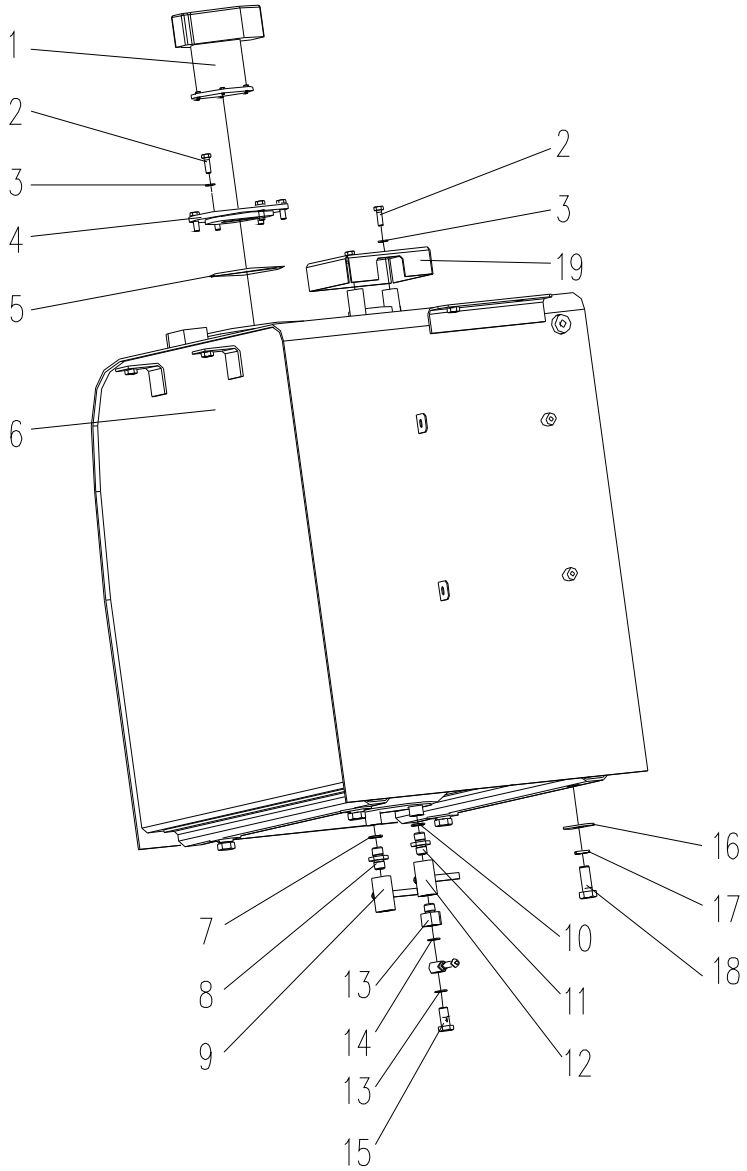

## 柴油箱 Fuel Tank

| 序号 ITEM | 零件代号 Part No | 零件名 | PART NAME | 数量 Q'TY | 服务代码 S.C | 适用机号 SERIAL NO | 互换性 IA | 替换零件 REPLACEABLE PART | |
|---|---|---|---|---|---|---|---|---|---|
| | | | | | | | | 零件代号 Part No | 数量 Q'TY |
| 1 | 803172591 | 空气滤清器 | Air Filter | 1 | | | | | |
| 2 | 805002097 | 螺栓 M8×25 | Bolt | 8 | | | | | |
| 3 | 819908973 | 垫圈 8 | Spring Washer | 8 | | | | | |
| 4 | 310500389 | 法兰 | Flange | 1 | | | | | |
| 5 | 801100112 | O 形圈 115×3.55 | O-Ring | 1 | | | | | |
| 6 | 310500388 | 油箱体 | Tank | 1 | | | | | |
| 7 | 805300032 | 垫圈 22 | Washer | 2 | | | | | |
| 8 | 310500016 | 接头 | Adapter | 1 | | | | | |
| 9 | 801102902 | 球阀 DN15(1/2) | Valve | 1 | | | | | |
| 10 | 805300044 | 垫圈 18 | Washer | 3 | | | | | |
| 11 | 310500390 | 接头 | Adapter | 1 | | | | | |
| 12 | 801102901 | 球阀 DN10(3/8) | Valve | 1 | | | | | |
| 13 | 310500391 | 接头 | Adapter | 1 | | | | | |
| 14 | 805300024 | 垫圈 14 | Washer | 4 | | | | | |
| 15 | 310500392 | 空心螺栓 | Bolt | 2 | | | | | |
| 16 | 805302525 | 垫圈 16 | Washer | 6 | | | | | |
| 17 | 805300069 | 垫圈 16 | Washer | 6 | | | | | |
| 18 | 805000051 | 螺栓 M16×40 | Bolt | 6 | | | | | |
| 19 | 310601193 | 护板 | Plate | 1 | | | | | |

# 上车液压管路

## Upper Hydraulic Piping

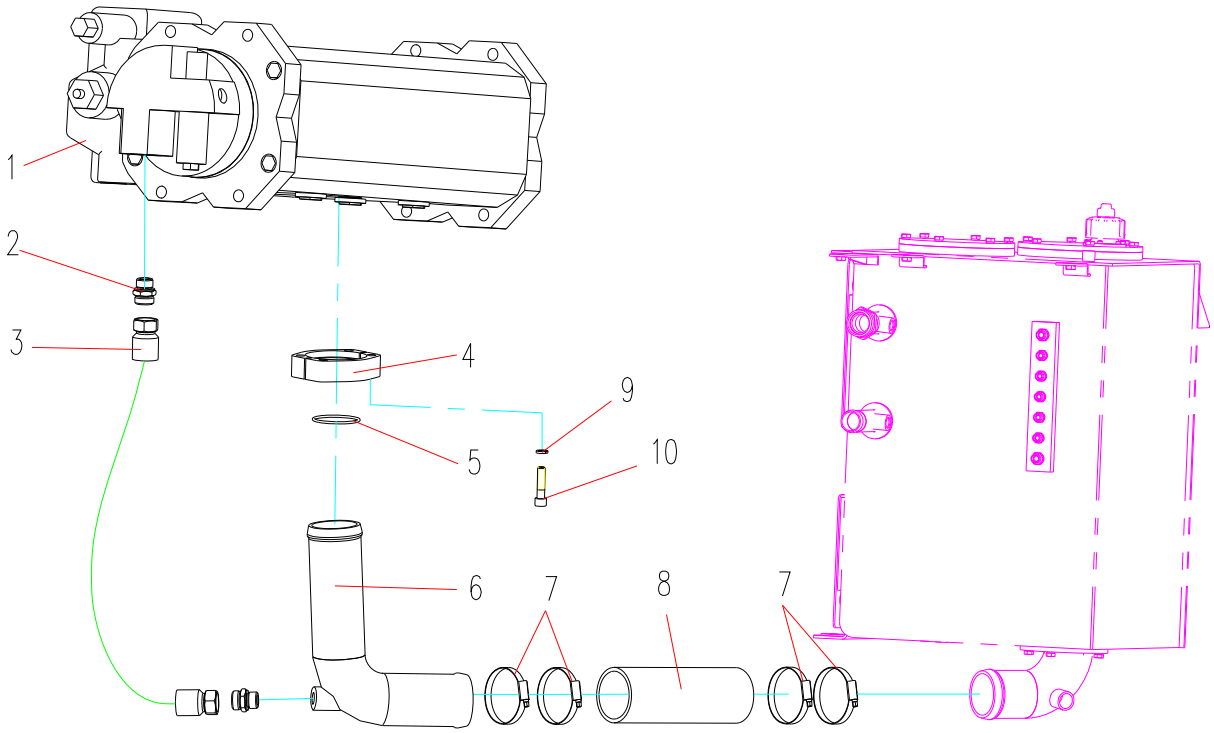

## 上车液压管路 Upper Hydraulic Piping

| 序号 ITEM | 零件代号 Part No | 零件名 | PART NAME | 数量 Q'TY | 服务代码 S.C | 适用机号 SERIAL NO | 互换性 IA | 替换零件 REPLACEABLE PART | |
|---|---|---|---|---|---|---|---|---|---|
| | | | | | | | | 零件代号 Part No | 数量 Q'TY |
| 1 | 803007229 | 主泵 | Main Pump | 1 | | | | | |
| 2 | 803172165 | 接头 | Adapter | 2 | | | | | |
| 3 | 803172482 | 软管总成 | Hose Assy | 1 | | | | | |
| 4 | 310500335 | 法兰 | Flange | 1 | | | | | |
| 5 | 801100046 | O 形圈 | O-ring | 1 | | | | | |
| 6 | 310500331 | 焊接接管 | Jionting Pipe | 1 | | | | | |
| 7 | 801905498 | T 型卡箍 | T-Clamp | 4 | | | | | |
| 8 | 803171979 | 吸油胶管 | Hose | 1 | | | | | |
| 9 | 805300018 | 垫圈 | Washer | 4 | | | | | |
| 10 | 805103597 | 螺栓 | Bolt | 4 | | | | | |

# 上车液压管路

## Upper Hydraulic Piping

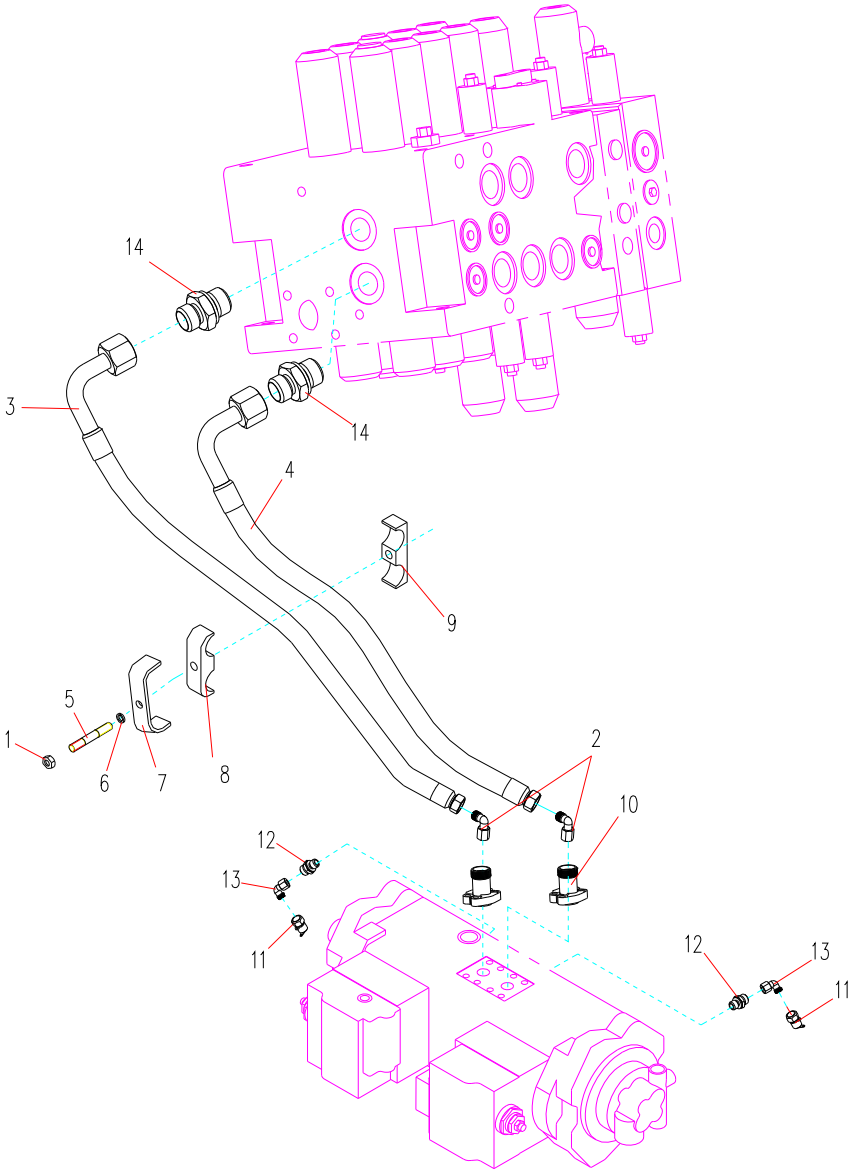

## 上车液压管路 Upper Hydraulic Piping

| 序号 ITEM | 零件代号 Part No | 零件名 | PART NAME | 数量 Q'TY | 服务代码 S.C | 适用机号 SERIAL NO | 互换性 IA | 替换零件 REPLACEABLE PART | |
|---|---|---|---|---|---|---|---|---|---|
| | | | | | | | | 零件代号 Part No | 数量 Q'TY |
| 1 | 805200049 | 螺母 | Nut | 1 | | | | | |
| 2 | 803166489 | 接头 | Adapter | 2 | | | | | |
| 3 | 803172006 | 软管总成 | Hose Assy | 1 | | | | | |
| 4 | 803172022 | 软管总成 | Hose Assy | 1 | | | | | |
| 5 | 310500043 | 螺栓 | Bolt | 1 | | | | | |
| 6 | 805300018 | 垫圈 | Washer | 1 | | | | | |
| 7 | 310600522 | 压板 | Plate | 1 | | | | | |
| 8 | 310600523 | 管夹 | Pipe Clip | 1 | | | | | |
| 9 | 310600524 | 管夹 | Pipe Clip | 1 | | | | | |
| 10 | 803166507 | 接头 | Adapter | 2 | | | | | |
| 11 | 803163606 | 测试接头 | Test Joint | 2 | | | | | |
| 12 | 803172161 | 接头 | Adapter | 2 | | | | | |
| 13 | 803166487 | 接头 | Adapter | 2 | | | | | |
| 14 | 803172299 | 接头 | Adapter | 2 | | | | | |

# 上车液压管路

## Upper Hydraulic Piping

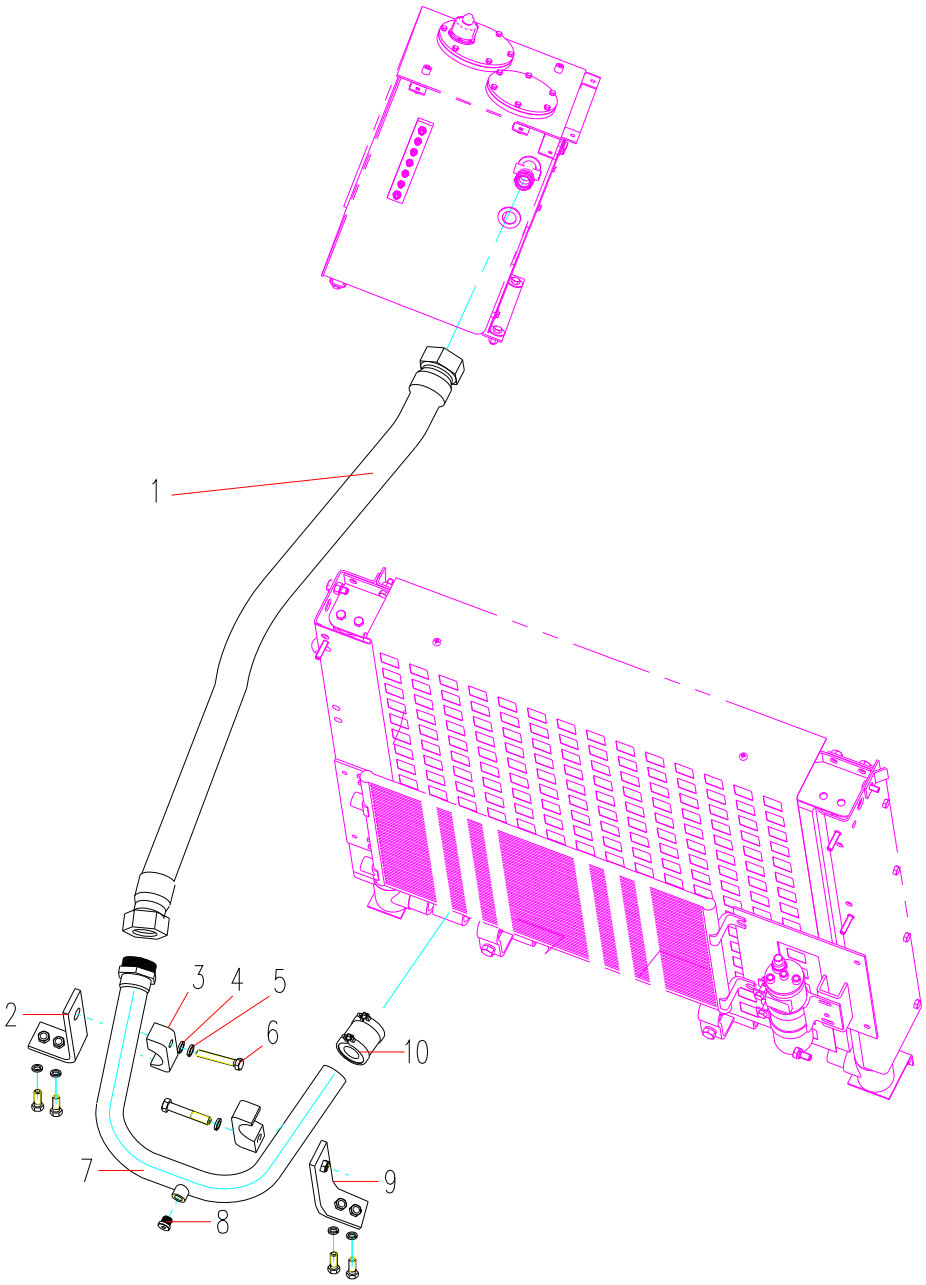

## 上车液压管路 Upper Hydraulic Piping

| 序号 ITEM | 零件代号 Part No | 零件名 | PART NAME | 数量 Q'TY | 服务代码 S.C | 适用机号 SERIAL NO | 互换性 IA | 替换零件 REPLACEABLE PART | |
|---|---|---|---|---|---|---|---|---|---|
| | | | | | | | | 零件代号 Part No | 数量 Q'TY |
| 1 | 803172015 | 软管总成 | Hose Assy | 1 | | | | | |
| 2 | 310500349 | 支架 | Bracket | 1 | | | | | |
| 3 | 310500346 | 管夹 | Pipe Clip | 2 | | | | | |
| 4 | 805300020 | 垫圈 | Washer | 2 | | | | | |
| 5 | 805300018 | 垫圈 | Washer | 2 | | | | | |
| 6 | 805000081 | 螺栓 | Bolt | 2 | | | | | |
| 7 | 310500977 | 钢管 | Pipe | 1 | | | | | |
| 8 | 803172170 | 堵头 | Plug | 1 | | | | | |
| 9 | 310500351 | 支架 | Bracket | 1 | | | | | |
| 10 | 803172507 | 接头 | Adapter | 1 | | | | | |

# 上车液压管路

## Upper Hydraulic Piping

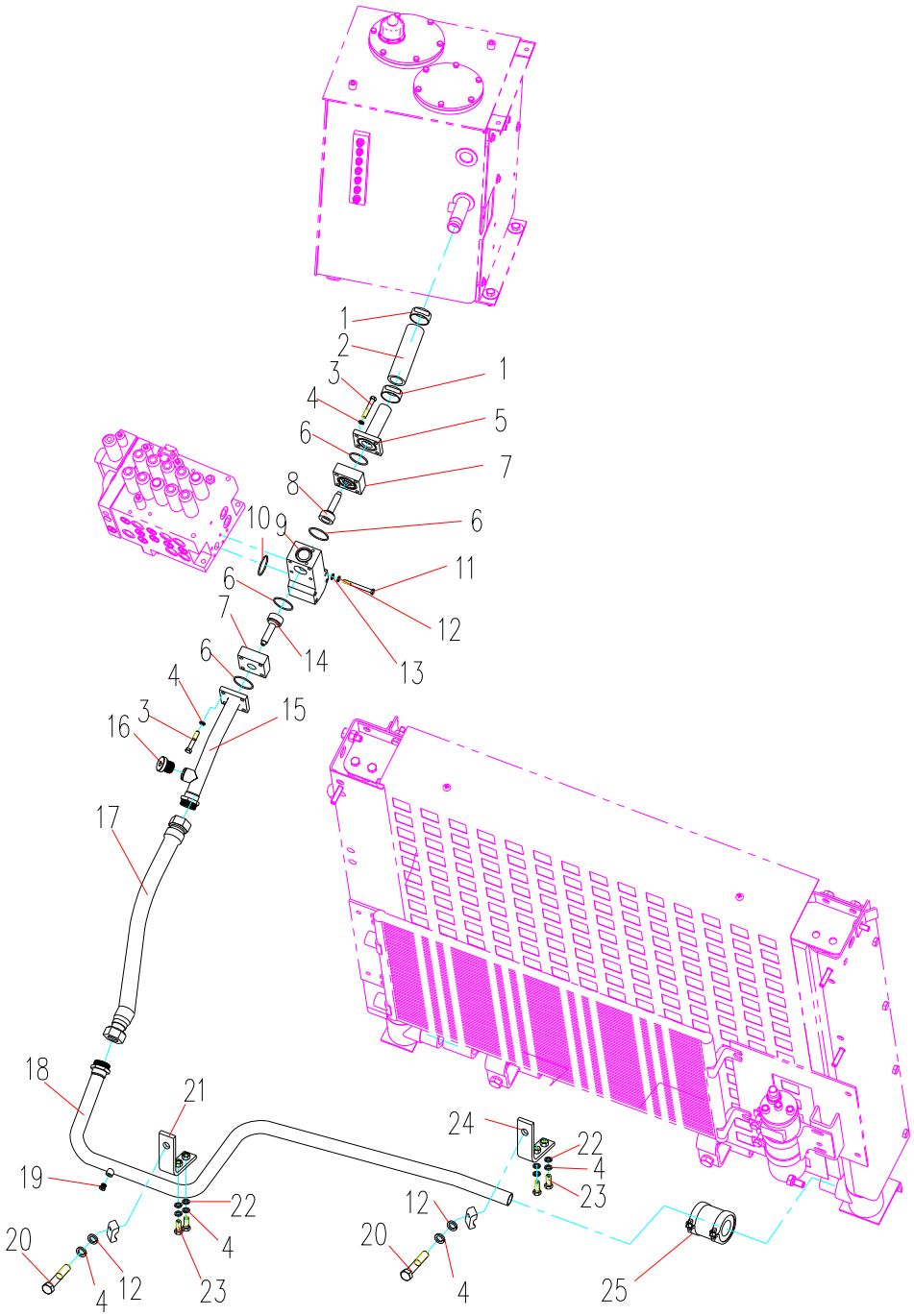

## 上车液压管路 Upper Hydraulic Piping

| 序号 ITEM | 零件代号 Part No | 零件名 | PART NAME | 数量 Q'TY | 服务代码 S.C | 适用机号 SERIAL NO | 互换性 IA | 替换零件 REPLACEABLE PART | |
|---|---|---|---|---|---|---|---|---|---|
| | | | | | | | | 零件代号 Part No | 数量 Q'TY |
| 1 | 801905604 | T 型卡箍 | T-Clamp | 4 | | | | | |
| 2 | 803171980 | 胶管 | Hose | 1 | | | | | |
| 3 | 805004678 | 螺栓 | Bolt | 8 | | | | | |
| 4 | 805300018 | 垫圈 | Washer | 10 | | | | | |
| 5 | 310500341 | 回油钢管 | Pipe | 1 | | | | | |
| 6 | 801373831 | O 型圈 | O-Ring | 4 | | | | | |
| 7 | 310500343 | 法兰 | Flange | 2 | | | | | |
| 8 | 803172062 | 单向阀 | Valve | 1 | | | | | |
| 9 | 310500848 | 回油块 | Block | 1 | | | | | |
| 10 | 801100138 | O 型圈 | O-Ring | 1 | | | | | |
| 11 | 805004670 | 螺栓 | Bolt | 4 | | | | | |
| 12 | 805300014 | 垫圈 | Washer | 6 | | | | | |
| 13 | 805302497 | 垫圈 | Washer | 4 | | | | | |
| 14 | 803172061 | 单向阀 | Valve | 1 | | | | | |
| 15 | 310500340 | 回油钢管 | Pipe | 1 | | | | | |
| 16 | 803173992 | 堵头 | Plug | 1 | | | | | |
| 17 | 803172016 | 软管总成 | Hose Assy | 1 | | | | | |
| 18 | 310500583 | 回油钢管 | Plug | 1 | | | | | |
| 19 | 803172170 | 堵头 | Plug | 1 | | | | | |
| 20 | 805004678 | 螺栓 | Bolt | 2 | | | | | |
| 21 | 310500354 | 支架 | Bracket | 1 | | | | | |
| 22 | 805300020 | 垫圈 | Washer | 4 | | | | | |
| 23 | 805001970 | 螺栓 | Bolt | 4 | | | | | |
| 24 | 310500005 | 支架 | Bracket | 1 | | | | | |
| 25 | 803172506 | 接头 | Adapter | 1 | | | | | |

# 上车液压管路

## Upper Hydraulic Piping

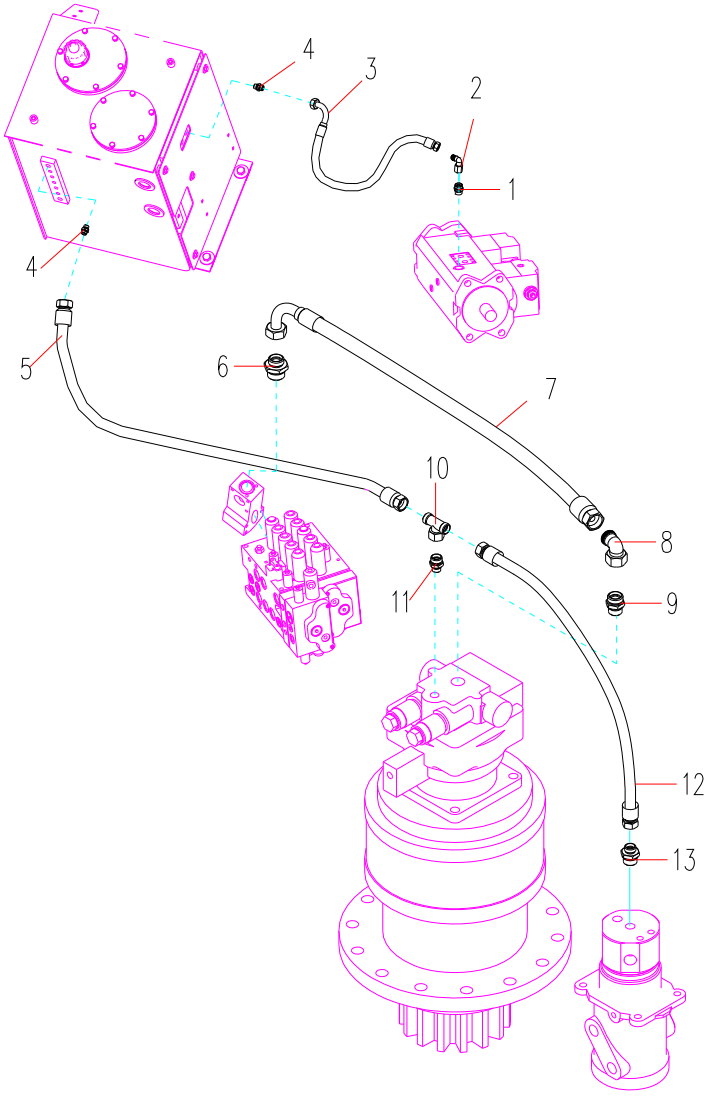

## 上车液压管路 Upper Hydraulic Piping

| 序号 ITEM | 零件代号 Part No | 零件名 | PART NAME | 数量 Q'TY | 服务代码 S.C | 适用机号 SERIAL NO | 互换性 IA | 替换零件 REPLACEABLE PART | |
|---|---|---|---|---|---|---|---|---|---|
| | | | | | | | | 零件代号 Part No | 数量 Q'TY |
| 1 | 803172173 | 接头 | Adapter | 1 | | | | | |
| 2 | 803109651 | 接头 | Adapter | 1 | | | | | |
| 3 | 803172444 | 软管总成 | Hose Assy | 1 | | | | | |
| 4 | 803173448 | 接头 | Adapter | 2 | | | | | |
| 5 | 803172023 | 软管总成 | Hose Assy | 1 | | | | | |
| 6 | 803164584 | 接头 | Adapter | 1 | | | | | |
| 7 | 803172474 | 软管总成 | Hose Assy | 1 | | | | | |
| 8 | 803166490 | 接头 | Adapter | 1 | | | | | |
| 9 | 803172165 | 接头 | Adapter | 1 | | | | | |
| 10 | 803166562 | 接头 | Adapter | 1 | | | | | |
| 11 | 819908926 | 接头 | Adapter | 1 | | | | | |
| 12 | 803172483 | 软管总成 | Hose Assy | 1 | | | | | |
| 13 | 803164850 | 接头 | Adapter | 2 | | | | | |

# 上车液压管路

## Upper Hydraulic Piping

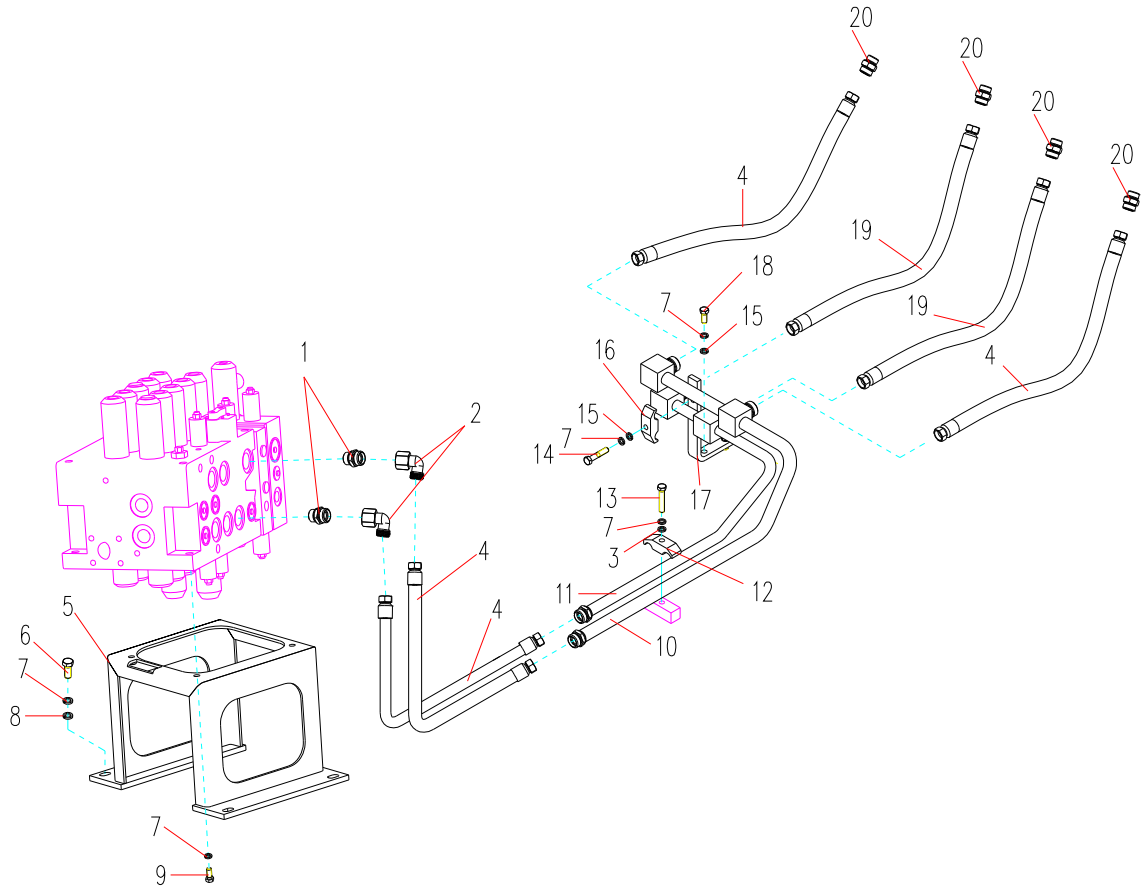

## 上车液压管路 Upper Hydraulic Piping

| 序号 ITEM | 零件代号 Part No | 零件名 | PART NAME | 数量 Q'TY | 服务代码 S.C | 适用机号 SERIAL NO | 互换性 IA | 替换零件 REPLACEABLE PART | |
|---|---|---|---|---|---|---|---|---|---|
| | | | | | | | | 零件代号 Part No | 数量 Q'TY |
| 1 | 803172299 | 接头 | Adapter | 2 | | | | | |
| 2 | 803166489 | 接头 | Adapter | 2 | | | | | |
| 3 | 805300020 | 垫圈 | Washer | 1 | | | | | |
| 4 | 803172013 | 软管总成 | Hose Assy | 4 | | | | | |
| 5 | 310500336 | 主阀支架 | Valve Bracket | 1 | | | | | |
| 6 | 805004627 | 螺栓 | Bolt | 4 | | | | | |
| 7 | 805300018 | 垫圈 | Washer | 12 | | | | | |
| 8 | 805302490 | 垫圈 | Washer | 4 | | | | | |
| 9 | 805004652 | 螺栓 | Bolt | 4 | | | | | |
| 10 | 310500850 | 动臂钢管 III | Boom Pipe III | 1 | | | | | |
| 11 | 310500849 | 动臂钢管 IV | Boom Pipe IV | 1 | | | | | |
| 12 | 310500348 | 管夹 | Pipe Clip | 1 | | | | | |
| 13 | 860111090 | 螺栓 | Bolt | 1 | | | | | |
| 14 | 805001941 | 螺栓 | Bolt | 1 | | | | | |
| 15 | 805300113 | 垫圈 | Washer | 3 | | | | | |
| 16 | 310500334 | 管夹 | Pipe Clip | 1 | | | | | |
| 17 | 310500333 | 弯板 | Bent Plate | 1 | | | | | |
| 18 | 805004627 | 螺栓 | Bolt | 2 | | | | | |
| 19 | 803172479 | 软管总成 | Hose Assy | 2 | | | | | |
| 20 | 803172510 | 接头 | Adapter | 4 | | | | | |

# 上车液压管路

## Upper Hydraulic Piping

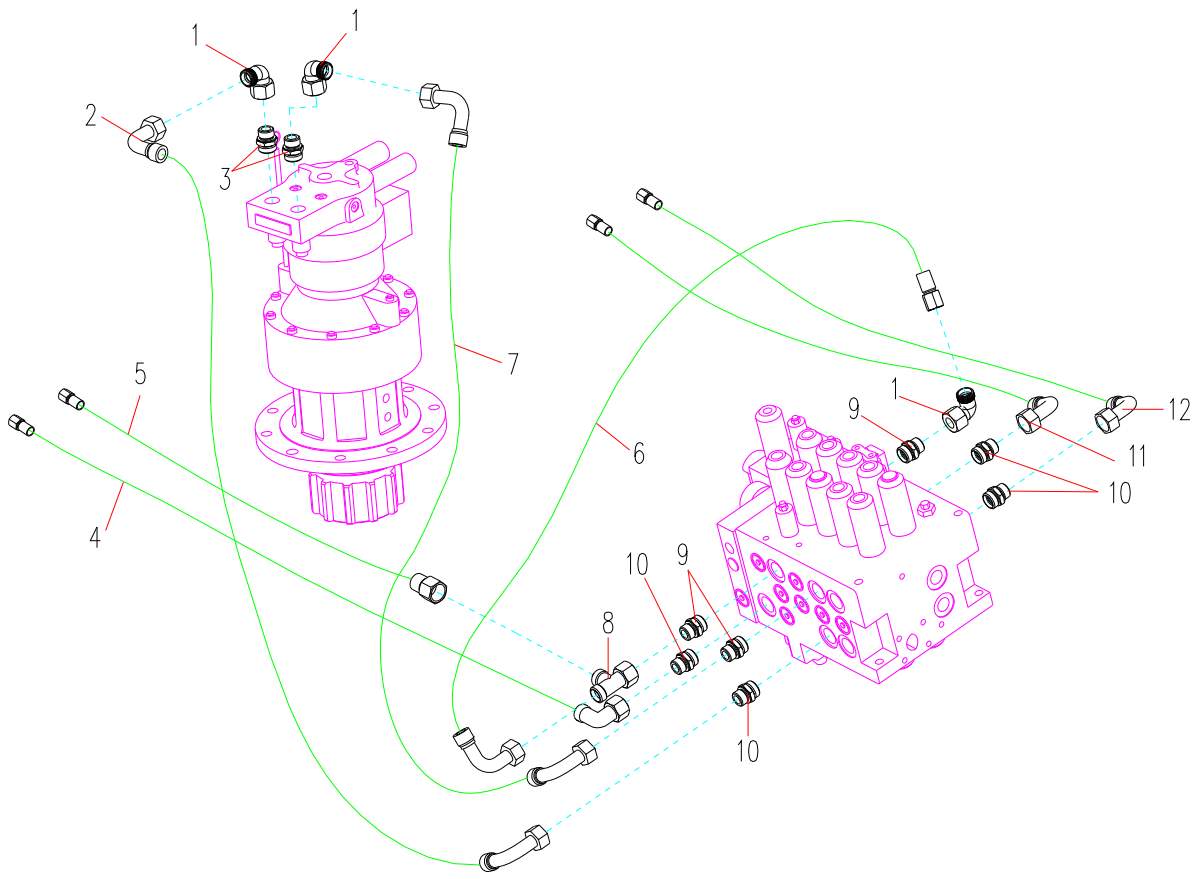

## 上车液压管路 Upper Hydraulic Piping

| 序号 ITEM | 零件代号 Part No | 零件名 | PART NAME | 数量 Q'TY | 服务代码 S.C | 适用机号 SERIAL NO | 互换性 IA | 替换零件 REPLACEABLE PART | |
|---|---|---|---|---|---|---|---|---|---|
| | | | | | | | | 零件代号 Part No | 数量 Q'TY |
| 1 | 803166489 | 接头 | Adapter | 3 | | | | | |
| 2 | 803172604 | 软管总成 | Hose Assy | 1 | | | | | |
| 3 | 803172510 | 接头 | Adapter | 2 | | | | | |
| 4 | 803177174 | 软管总成 | Hose Assy | 1 | | | | | |
| 5 | 819908672 | 软管总成 | Hose Assy | 1 | | | | | |
| 6 | 803172480 | 软管总成 | Hose Assy | 1 | | | | | |
| 7 | 819908937 | 软管总成 | Hose Assy | 1 | | | | | |
| 8 | 803164779 | 接头 | Adapter | 1 | | | | | |
| 9 | 803172299 | 接头 | Adapter | 3 | | | | | |
| 10 | 819908790 | 接头 | Adapter | 4 | | | | | |
| 11 | 803172009 | 软管总成 | Hose Assy | 1 | | | | | |
| 12 | 803171981 | 软管总成 | Hose Assy | 1 | | | | | |

# 上车液压管路

## Upper Hydraulic Piping

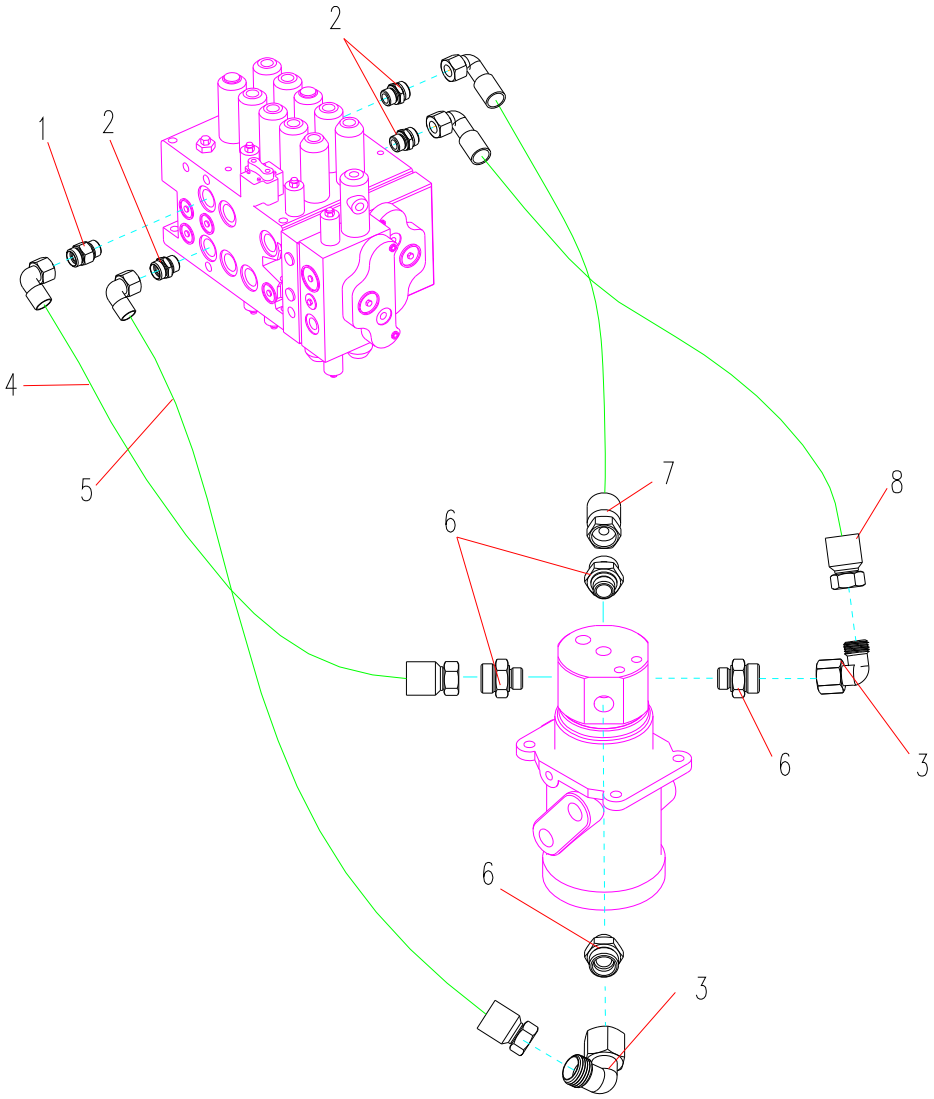

## 上车液压管路 Upper Hydraulic Piping

| 序号 ITEM | 零件代号 Part No | 零件名 | PART NAME | 数量 Q'TY | 服务代码 S.C | 适用机号 SERIAL NO | 互换性 IA | 替换零件 REPLACEABLE PART | |
|---|---|---|---|---|---|---|---|---|---|
| | | | | | | | | 零件代号 Part No | 数量 Q'TY |
| 1 | 819908790 | 接头 | Adapter | 3 | | | | | |
| 2 | 803172299 | 接头 | Adapter | 1 | | | | | |
| 3 | 803166489 | 接头 | Adapter | 2 | | | | | |
| 4 | 803172009 | 软管总成 | Hose Assy | 1 | | | | | |
| 5 | 803172008 | 软管总成 | Hose Assy | 1 | | | | | |
| 6 | 803163585 | 接头 | Adapter | 4 | | | | | |
| 7 | 803172010 | 软管总成 | Hose Assy | 1 | | | | | |
| 8 | 803172011 | 软管总成 | Hose Assy | 1 | | | | | |

液压油箱

Hydraulic Oil Tank

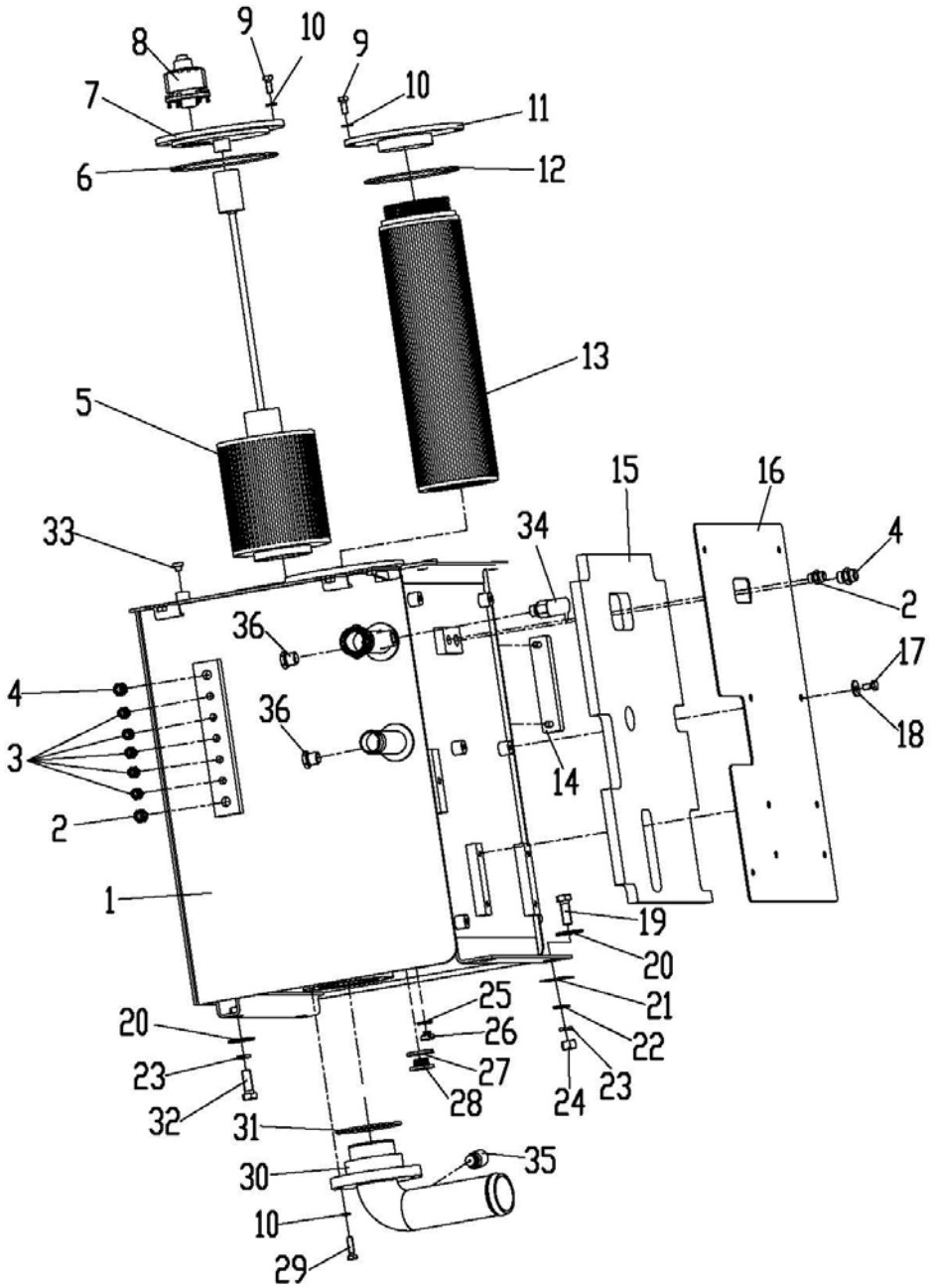

液压油箱 Hydraulic Oil Tank

| 序号 ITEM | 零件代号 Part No | 零件名 | PART NAME | 数量 Q'TY | 服务代码 S.C | 适用机号 SERIAL NO | 互换性 IA | 替换零件 REPLACEABLE PART | |
|---|---|---|---|---|---|---|---|---|---|
| | | | | | | | | 零件代号 Part No | 数量 Q'TY |
| 1 | 310500394 | 油箱体 | Tank | 1 | | | | | |
| 2 | 803173835 | 接头 | Joint | 2 | | | | | |
| 3 | 803163582 | 接头 | Joint | 5 | | | | | |
| 4 | 803173448 | 接头 | Joint | 2 | | | | | |
| 5 | 803194453 | 吸油过滤器 | Filter | 1 | | | | | |
| 6 | 803172578 | O 形圈 195×3.55 | O-ring | 1 | | | | | |
| 7 | 310500396 | 法兰盖 | Flange Cover | 1 | | | | | |
| 8 | 800104319 | 空滤器组件 | Discreteness of Strainer | 1 | | | | | |
| 9 | 805000727 | 螺栓 M10×25 | Bolt | 12 | | | | | |
| 10 | 805302497 | 垫圈 10 | Washer | 16 | | | | | |
| 11 | 310500397 | 法兰盖 | Flange Cover | 1 | | | | | |
| 12 | 801100226 | O 形圈 175×3.55 | O-ring | 1 | | | | | |
| 13 | 800104318 | 回油滤清器 | Filter | 1 | | | | | |
| 14 | 803202262 | 液位计 | Tank Gauge | 1 | | | | | |
| 15 | 310500400 | 海绵 | Sponge | 1 | | | | | |
| 16 | 310500847 | 板 | Plate | 1 | | | | | |
| 17 | 805005201 | 螺栓 M12×20 | Bolt | 5 | | | | | |
| 18 | 805300113 | 垫圈 12 | Washer | 5 | | | | | |
| 19 | 805000026 | 螺塞 M16×45 | Bolt | 2 | | | | | |
| 20 | 805302525 | 垫圈 16 | Washer | 4 | | | | | |
| 21 | 310500398 | 调整垫 | Washer | 2 | | | | | |
| 22 | 805300013 | 垫圈 16 | Washer | 2 | | | | | |
| 23 | 805300011 | 垫圈 16 | Washer | 4 | | | | | |
| 24 | 805200051 | 螺母 M16 | Nut | 2 | | | | | |
| 25 | 805300024 | 垫圈 14 | Washer | 1 | | | | | |
| 26 | 803173221 | 螺塞 M14×1.5 | Plug | 1 | | | | | |
| 27 | 805300038 | 垫圈 27 | Washer | 1 | | | | | |
| 28 | 803173222 | 螺塞 M27×2 | Plug | 1 | | | | | |
| 29 | 805000062 | 螺栓 M10×35 | Bolt | 4 | | | | | |
| 30 | 310500395 | 吸油管总成 | Pipe | 1 | | | | | |
| 31 | 801100051 | O 形圈 118×3.55 | O-ring | 1 | | | | | |
| 32 | 805005210 | 螺栓 M16×40 | Bolt | 2 | | | | | |
| 33 | 310500399 | 盖 | Cover | 2 | | | | | |
| 34 | 803504608 | 发讯器 | Annunciator | 1 | | | | | |
| 35 | 803506008 | 发讯器 | Annunciator | 1 | | | | | |
| 36 | 803172500 | 堵头 | Plug | 2 | | | | | |

# 先导液压管路

Pilot Hydraulic Piping

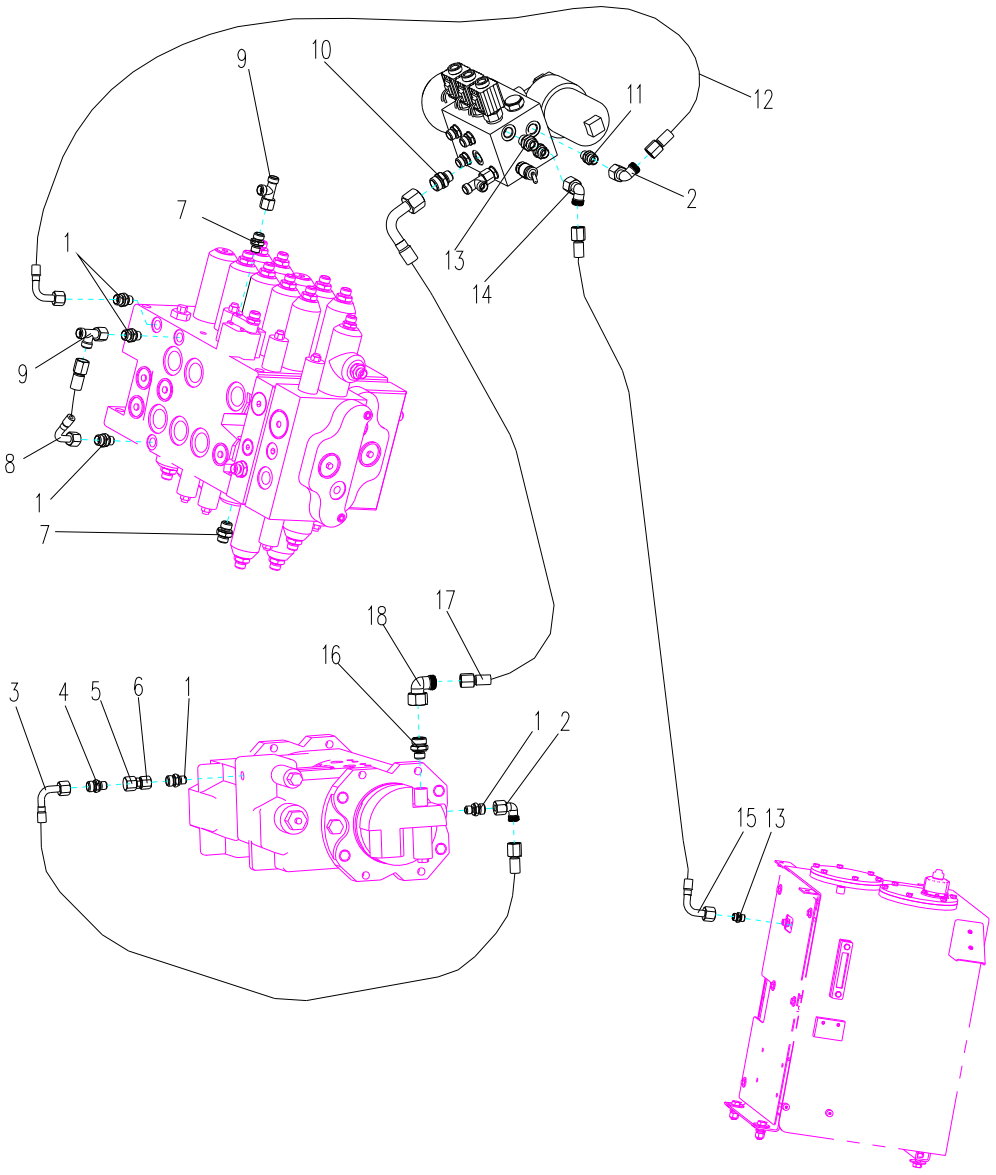

## 先导液压管路 Pilot Hydraulic Piping

| 序号 ITEM | 零件代号 Part No | 零件名 | PART NAME | 数量 Q'TY | 服务代码 S.C | 适用机号 SERIAL NO | 互换性 IA | 替换零件 REPLACEABLE PART | |
|---|---|---|---|---|---|---|---|---|---|
| | | | | | | | | 零件代号 Part No | 数量 Q'TY |
| 1 | 803172161 | 接头 | Adapter | 5 | | | | | |
| 2 | 803103351 | 接头 | Adapter | 2 | | | | | |
| 3 | 803172602 | 软管总成 | Hose Assy | 1 | | | | | |
| 4 | 803172058 | 滤油器 | Filter | 1 | | | | | |
| 5 | 310600430 | 接头体 | Join Block | 1 | | | | | |
| 6 | 803163672 | 接头 | Adapter | 1 | | | | | |
| 7 | 803172160 | 接头 | Adapter | 2 | | | | | |
| 8 | 803172600 | 软管总成 | Hose Assy | 1 | | | | | |
| 9 | 803172316 | 接头 | Adapter | 2 | | | | | |
| 10 | 803164850 | 接头 | Adapter | 1 | | | | | |
| 11 | 803163582 | 接头 | Adapter | 1 | | | | | |
| 12 | 803171977 | 软管总成 | Hose Assy | 1 | | | | | |
| 13 | 803173835 | 接头 | Adapter | 2 | | | | | |
| 14 | 803165614 | 接头 | Adapter | 1 | | | | | |
| 15 | 803164645 | 接头 | Adapter | 1 | | | | | |
| 16 | 803172173 | 接头 | Adapter | 1 | | | | | |
| 17 | 803172603 | 软管总成 | Hose Assy | 1 | | | | | |
| 18 | 803109651 | 接头 | Adapter | 1 | | | | | |

# 先导液压管路

Pilot Hydraulic Piping

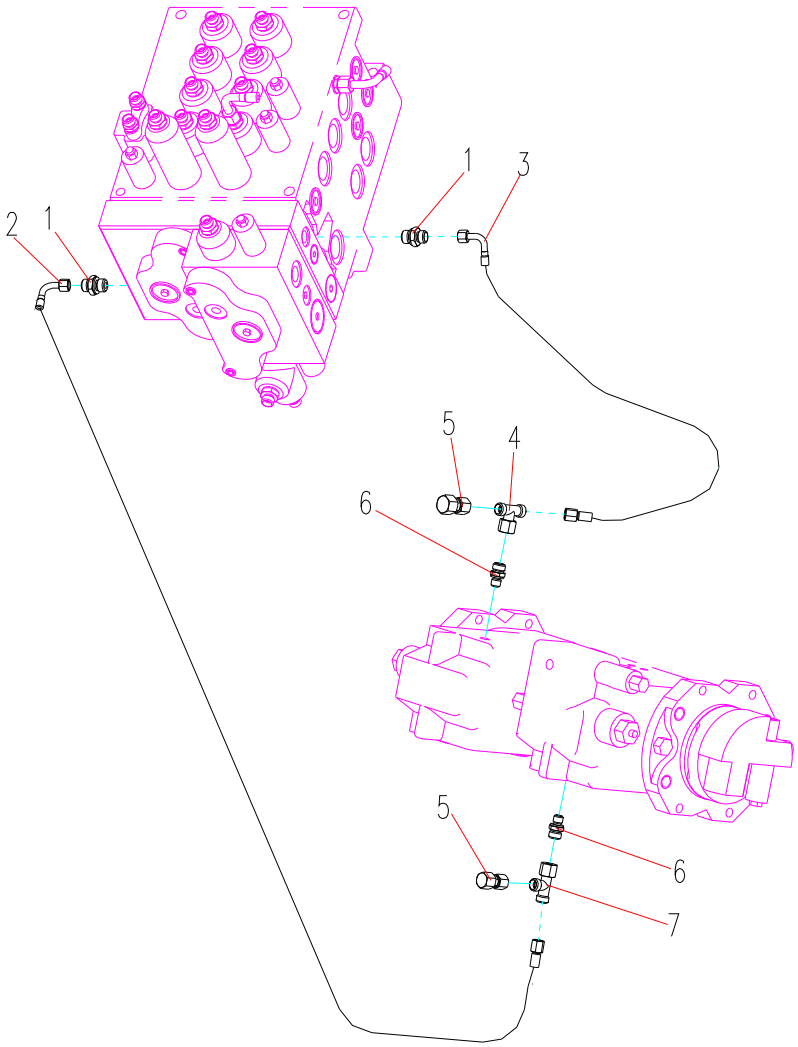

## 先导液压管路 Pilot Hydraulic Piping

| 序号 ITEM | 零件代号 Part No | 零件名 | PART NAME | 数量 Q'TY | 服务代码 S.C | 适用机号 SERIAL NO | 互换性 IA | 替换零件 REPLACEABLE PART | |
|---|---|---|---|---|---|---|---|---|---|
| | | | | | | | | 零件代号 Part No | 数量 Q'TY |
| 1 | 803172160 | 接头 | Adapter | 2 | | | | | |
| 2 | 803172245 | 软管总成 | Hose Assy | 1 | | | | | |
| 3 | 803172428 | 软管总成 | Hose Assy | 1 | | | | | |
| 4 | 803166484 | 接头 | Adapter | 1 | | | | | |
| 5 | 803163606 | 测试接头 | Test Joint | 2 | | | | | |
| 6 | 803172161 | 接头 | Adapter | 2 | | | | | |
| 7 | 803172316 | 接头 | Adapter | 2 | | | | | |

# 先导液压管路

Pilot Hydraulic Piping

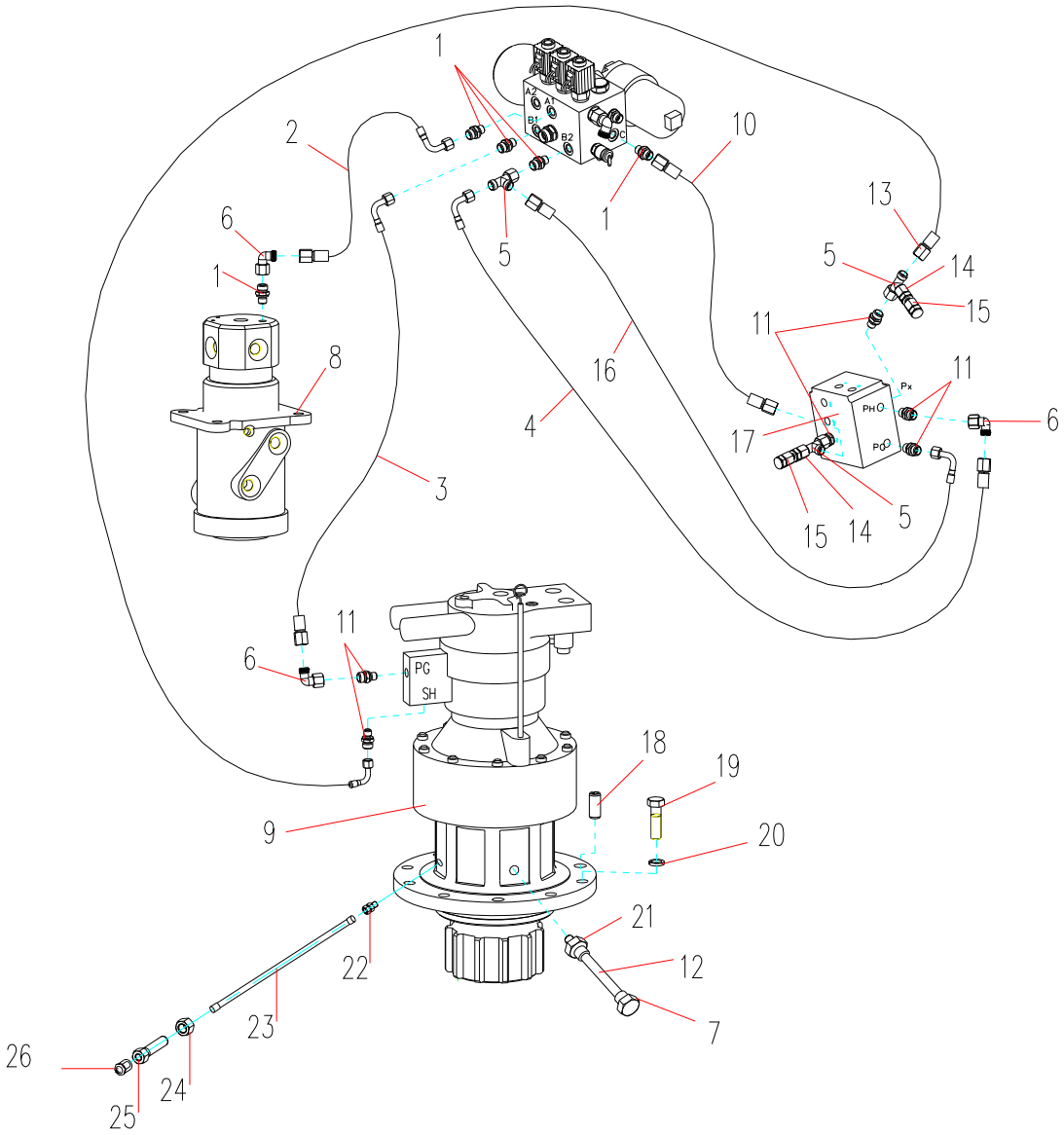

## 先导液压管路 Pilot Hydraulic Piping

| 序号 ITEM | 零件代号 Part No | 零件名 | PART NAME | 数量 Q'TY | 服务代码 S.C | 适用机号 SERIAL NO | 互换性 IA | 替换零件 REPLACEABLE PART | |
|---|---|---|---|---|---|---|---|---|---|
| | | | | | | | | 零件代号 Part No | 数量 Q'TY |
| 1 | 803163582 | 接头 | Adapter | 5 | | | | | |
| 2 | 803172598 | 软管总成 | Hose Assy | 1 | | | | | |
| 3 | 819908890 | 软管总成 | Hose Assy | 1 | | | | | |
| 4 | 803172095 | 软管总成 | Hose Assy | 1 | | | | | |
| 5 | 803172316 | 接头 | Adapter | 3 | | | | | |
| 6 | 803166487 | 接头 | Adapter | 3 | | | | | |
| 7 | 803164887 | 管堵 | Plug | 1 | | | | | |
| 8 | 800305381 | 回转接头 | Rotary Connection | 1 | | | | | |
| 9 | 803007231 | 回转马达 | Swing Motor | 1 | | | | | |
| 10 | 803172107 | 软管总成 | Hose Assy | 1 | | | | | |
| 11 | 803172161 | 接头 | Adapter | 6 | | | | | |
| 12 | 860104750 | 放油管 | Hose | 1 | | | | | |
| 13 | 803172597 | 软管总成 | Hose Assy | 1 | | | | | |
| 14 | 803163569 | 接头 | Adapter | 1 | | | | | |
| 15 | 310500042 | 接头 | Adapter | 1 | | | | | |
| 16 | 803172083 | 软管总成 | Hose Assy | 1 | | | | | |
| 17 | 803007225 | 直线阀 | Line Valve | 1 | | | | | |
| 18 | 805603538 | 销 | Pin | 1 | | | | | |
| 19 | 805006290 | 螺栓 | Bolt | 9 | | | | | |
| 20 | 805300011 | 垫圈 | Washer | 9 | | | | | |
| 21 | 803172307 | 接头 | Joint | 1 | | | | | |
| 22 | 803172162 | 接头 | Adapter | 1 | | | | | |
| 23 | 803183916 | 软管 | Hose Assy | 1 | | | | | |
| 24 | 805200262 | 螺母 | Nut | 1 | | | | | |
| 25 | 803177315 | 接头体 | Adapter | 1 | | | | | |
| 26 | 801102863 | 油杯 | Grease Nipple | 1 | | | | | |

# 先导液压管路

## Pilot Hydraulic Piping

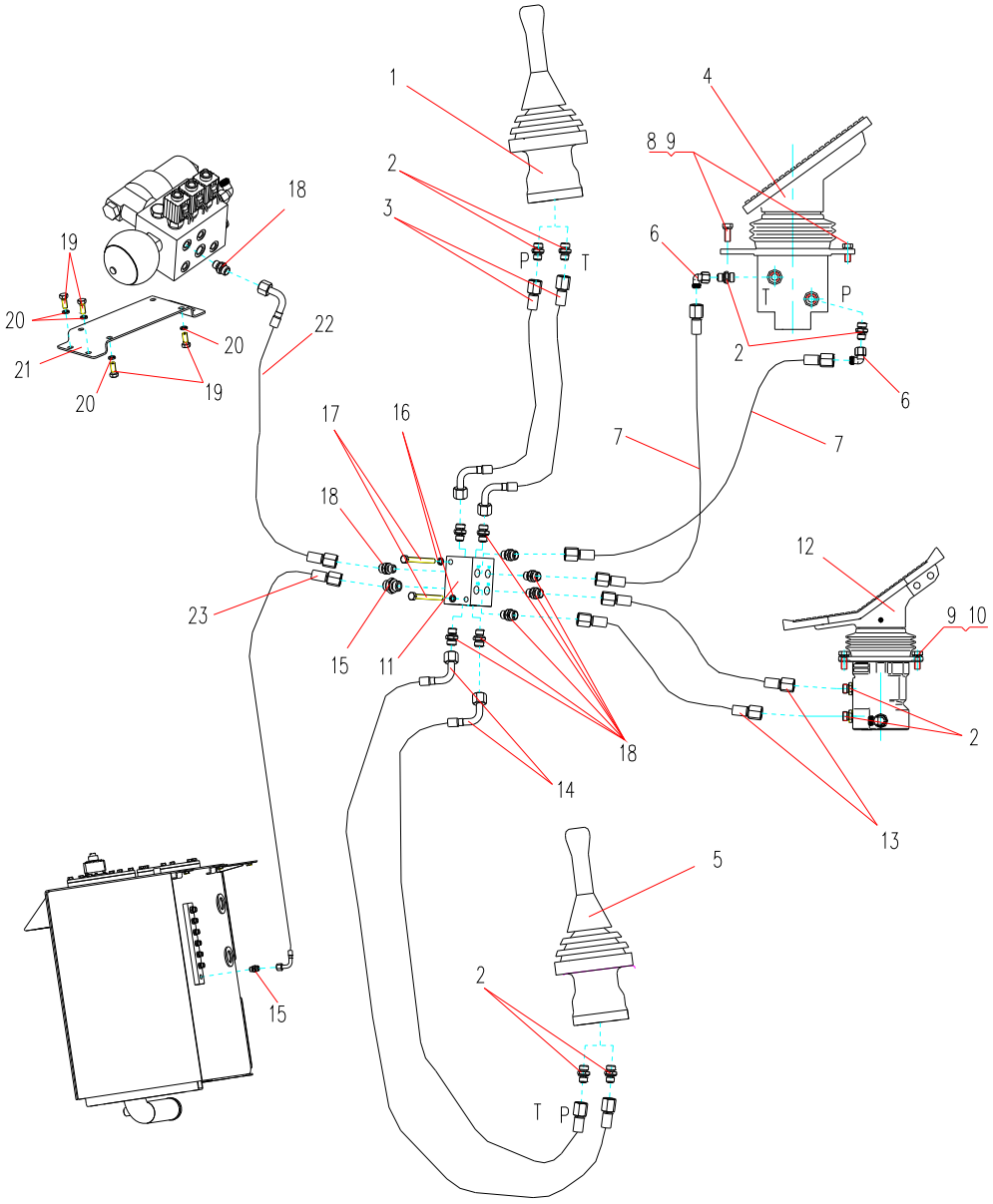

## 先导液压管路 Pilot Hydraulic Piping

| 序号 ITEM | 零件代号 Part No | 零件名 | PART NAME | 数量 Q'TY | 服务代码 S.C | 适用机号 SERIAL NO | 互换性 IA | 替换零件 REPLACEABLE PART | |
|---|---|---|---|---|---|---|---|---|---|
| | | | | | | | | 零件代号 Part No | 数量 Q'TY |
| 1 | 803007222 | 右先导阀 | Right Pilot Valve | 1 | | | | | |
| 2 | 803172161 | 接头 | Adapter | 8 | | | | | |
| 3 | 803172419 | 软管总成 | Hose Assy | 2 | | | | | |
| 4 | 803007191 | 破碎先导阀 | Breaker Pilot Valve | 1 | | | | | |
| 5 | 803007221 | 左先导阀 | Left Pilot Valve | 1 | | | | | |
| 6 | 803166487 | 接头 | Adapter | 2 | | | | | |
| 7 | 803177328 | 软管总成 | Hose Assy | 2 | | | | | |
| 8 | 805000714 | 螺栓 | Bolt | 2 | | | | | |
| 9 | 805300014 | 垫圈 | Washer | 6 | | | | | |
| 10 | 805000062 | 螺栓 | Bolt | 4 | | | | | |
| 11 | 803007220 | 分流块 | Diffluence | 1 | | | | | |
| 12 | 803202206 | 先导阀 | Pilot Valve | 1 | | | | | |
| 13 | 803172092 | 软管总成 | Hose Assy | 2 | | | | | |
| 14 | 803172095 | 软管总成 | Hose Assy | 2 | | | | | |
| 15 | 803173835 | 接头 | Adapter | 1 | | | | | |
| 16 | 805300010 | 垫圈 | Washer | 2 | | | | | |
| 17 | 805004693 | 螺栓 | Bolt | 2 | | | | | |
| 18 | 803163582 | 接头 | Adapter | 10 | | | | | |
| 19 | 805000714 | 螺栓 | Bolt | 8 | | | | | |
| 20 | 805300014 | 垫圈 | Washer | 8 | | | | | |
| 21 | 310500233 | 支架 | Bracket | 1 | | | | | |
| 22 | 803172000 | 软管总成 | Hose Assy | 1 | | | | | |
| 23 | 803172012 | 软管总成 | Hose Assy | 1 | | | | | |

# 先导液压管路

Pilot Hydraulic Piping

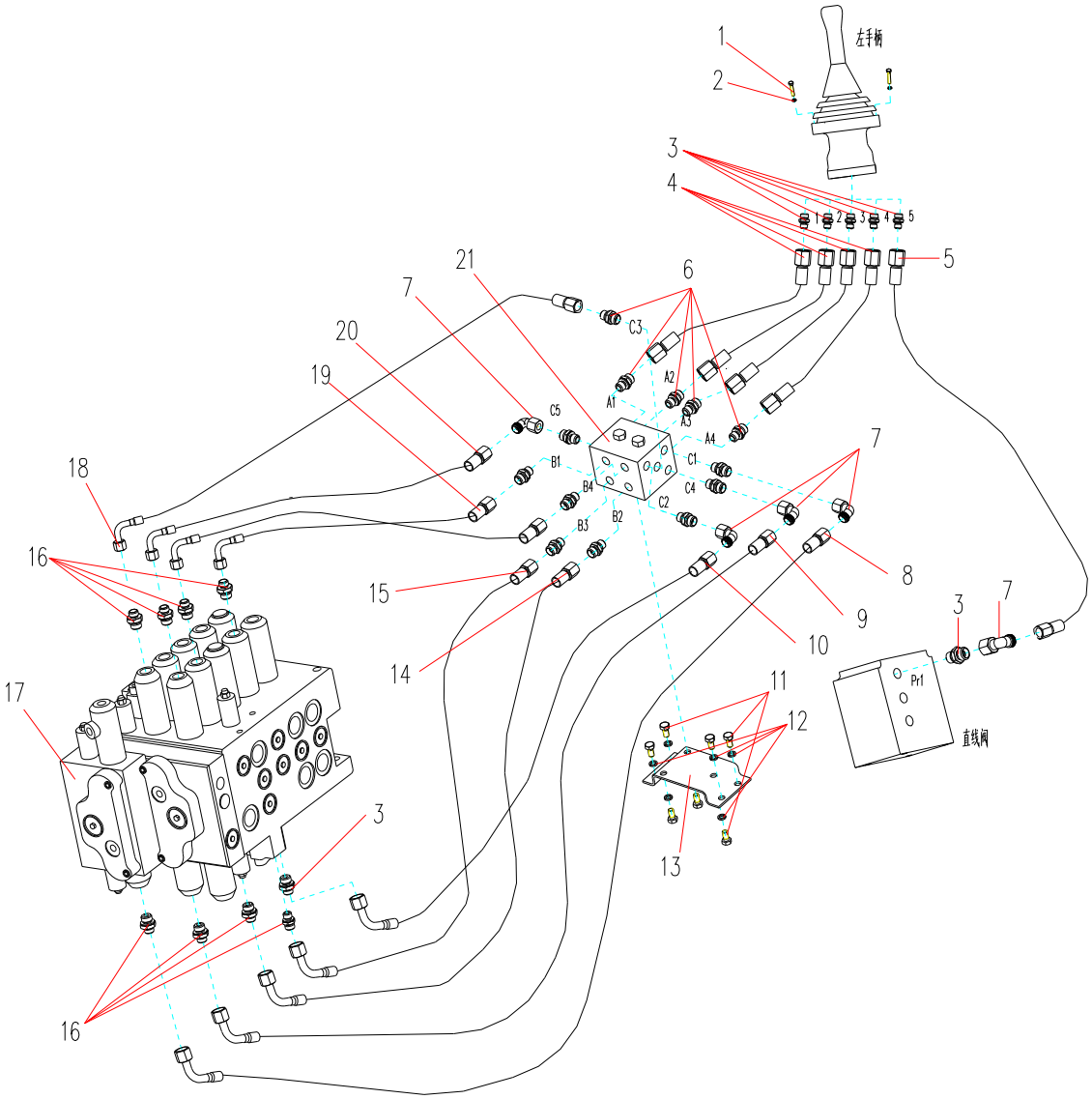

## 先导液压管路 Pilot Hydraulic Piping

| 序号 ITEM | 零件代号 Part No | 零件名 | PART NAME | 数量 Q'TY | 服务代码 S.C | 适用机号 SERIAL NO | 互换性 IA | 替换零件 REPLACEABLE PART | |
|---|---|---|---|---|---|---|---|---|---|
| | | | | | | | | 零件代号 Part No | 数量 Q'TY |
| 1 | 805103606 | 螺钉 | Screw | 4 | | | | | |
| 2 | 805300030 | 垫圈 | Washer | 4 | | | | | |
| 3 | 803172161 | 接头 | Adapter | 7 | | | | | |
| 4 | 803177329 | 软管总成 | Hose Assy | 4 | | | | | |
| 5 | 803173145 | 软管总成 | Hose Assy | 1 | | | | | |
| 6 | 803163582 | 接头 | Adapter | 13 | | | | | |
| 7 | 803163572 | 接头 | Adapter | 5 | | | | | |
| 8 | 803172018 | 软管总成 | Hose Assy | 1 | | | | | |
| 9 | 803172467 | 软管总成 | Hose Assy | 1 | | | | | |
| 10 | 803172004 | 软管总成 | Hose Assy | 1 | | | | | |
| 11 | 805005234 | 螺栓 | Bolt | 4 | | | | | |
| 12 | 805300010 | 垫圈 | Washer | 4 | | | | | |
| 13 | 310500235 | 支架 | Bracket | 1 | | | | | |
| 14 | 803172005 | 软管总成 | Hose Assy | 1 | | | | | |
| 15 | 803172091 | 软管总成 | Hose Assy | 1 | | | | | |
| 16 | 803172160 | 接头 | Adapter | 8 | | | | | |
| 17 | 803007230 | 主阀 | MainValve | 1 | | | | | |
| 18 | 803172492 | 软管总成 | Hose Assy | 1 | | | | | |
| 19 | 803173146 | 软管总成 | Hose Assy | 1 | | | | | |
| 20 | 803172601 | 软管总成 | Hose Assy | 1 | | | | | |
| 21 | 803172496 | 梭阀块 | Shuttle Valve | 1 | | | | | |

# 先导液压管路

Pilot Hydraulic Piping

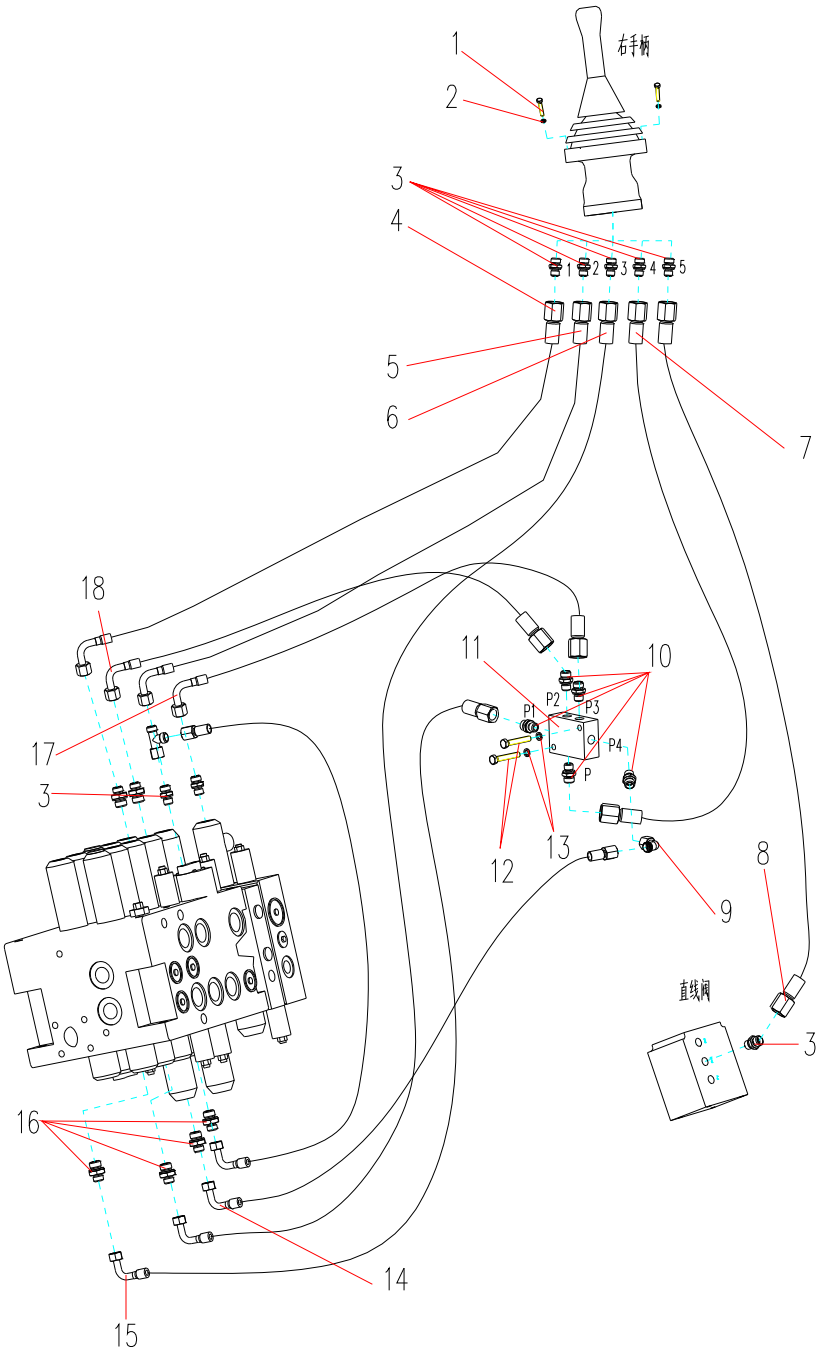

## 先导液压管路 Pilot Hydraulic Piping

| 序号 ITEM | 零件代号 Part No | 零件名 | PART NAME | 数量 Q'TY | 服务代码 S.C | 适用机号 SERIAL NO | 互换性 IA | 替换零件 REPLACEABLE PART | |
|---|---|---|---|---|---|---|---|---|---|
| | | | | | | | | 零件代号 Part No | 数量 Q'TY |
| 1 | 805103606 | 螺钉 | Screw | 4 | | | | | |
| 2 | 805300030 | 垫圈 | Washer | 4 | | | | | |
| 3 | 803172161 | 接头 | Adapter | 6 | | | | | |
| 4 | 803172082 | 软管总成 | Hose Assy | 1 | | | | | |
| 5 | 803172642 | 软管总成 | Hose Assy | 1 | | | | | |
| 6 | 803172673 | 软管总成 | Hose Assy | 1 | | | | | |
| 7 | 803172002 | 软管总成 | Hose Assy | 1 | | | | | |
| 8 | 803172747 | 软管总成 | Hose Assy | 1 | | | | | |
| 9 | 803163572 | 接头 | Adapter | 1 | | | | | |
| 10 | 803163582 | 接头 | Adapter | 5 | | | | | |
| 11 | 803172497 | 动臂分流块 | Arm Diffluence | 1 | | | | | |
| 12 | 805000137 | 螺栓 | Bolt | 2 | | | | | |
| 13 | 805300010 | 垫圈 | Washer | 2 | | | | | |
| 14 | 803172467 | 软管总成 | Hose Assy | 1 | | | | | |
| 15 | 803172555 | 软管总成 | Hose Assy | 1 | | | | | |
| 16 | 803172160 | 接头 | Adapter | 7 | | | | | |
| 17 | 803172088 | 软管总成 | Hose Assy | 1 | | | | | |
| 18 | 803172489 | 软管总成 | Hose Assy | 1 | | | | | |

# 先导液压管路

Pilot Hydraulic Piping

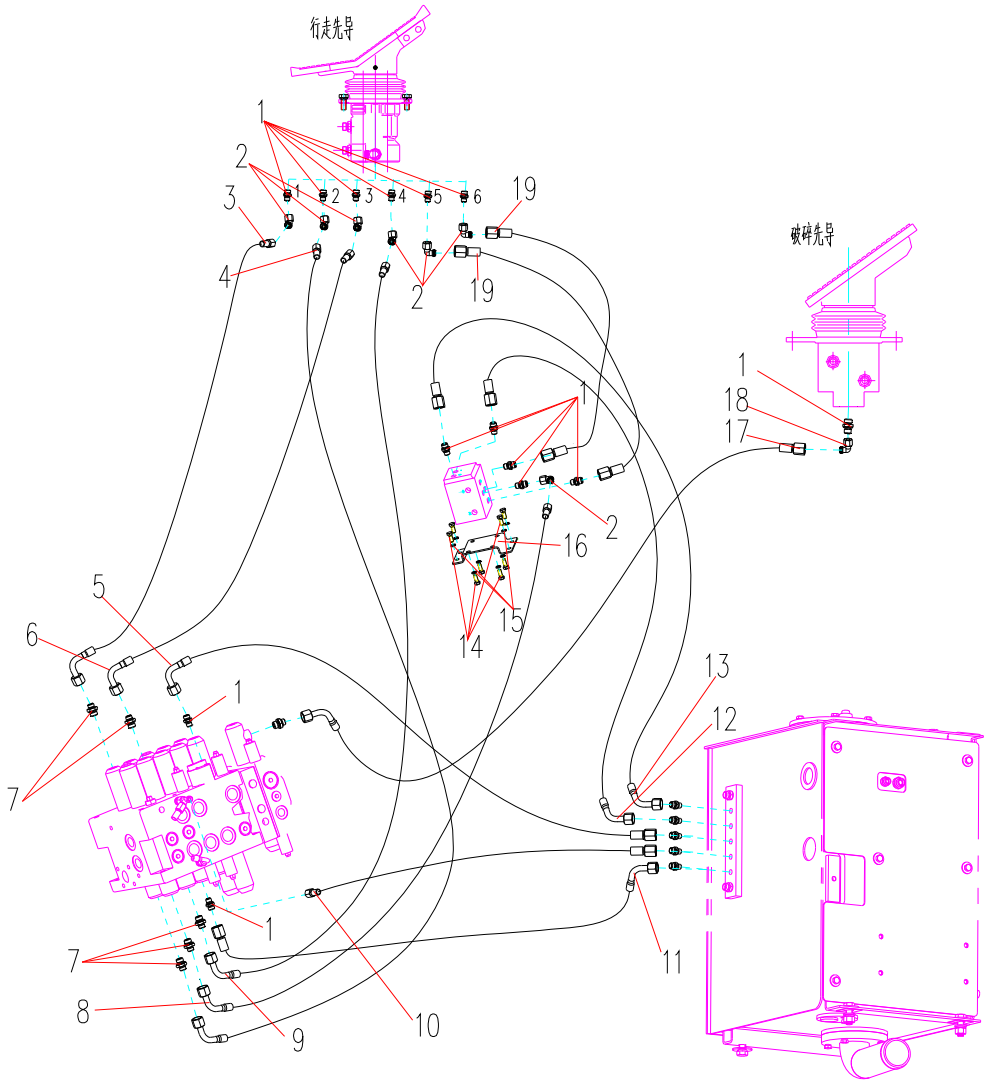

## 先导液压管路 Pilot Hydraulic Piping

| 序号 ITEM | 零件代号 Part No | 零件名 | PART NAME | 数量 Q'TY | 服务代码 S.C | 适用机号 SERIAL NO | 互换性 IA | 替换零件 REPLACEABLE PART | |
|---|---|---|---|---|---|---|---|---|---|
| | | | | | | | | 零件代号 Part No | 数量 Q'TY |
| 1 | 803172161 | 接头 | Adapter | 14 | | | | | |
| 2 | 803163572 | 接头 | Adapter | 6 | | | | | |
| 3 | 803173006 | 软管总成 | Hose Assy | 1 | | | | | |
| 4 | 803172566 | 软管总成 | Hose Assy | 1 | | | | | |
| 5 | 803172235 | 软管总成 | Hose Assy | 1 | | | | | |
| 6 | 803173113 | 软管总成 | Hose Assy | 1 | | | | | |
| 7 | 803172160 | 接头 | Adapter | 5 | | | | | |
| 8 | 819908661 | 软管总成 | Hose Assy | 1 | | | | | |
| 9 | 803173066 | 软管总成 | Hose Assy | 1 | | | | | |
| 10 | 803172595 | 软管总成 | Hose Assy | 1 | | | | | |
| 11 | 803172493 | 软管总成 | Hose Assy | 1 | | | | | |
| 12 | 803172599 | 软管总成 | Hose Assy | 1 | | | | | |
| 13 | 803172600 | 软管总成 | Hose Assy | 1 | | | | | |
| 14 | 805005934 | 螺栓 | Bolt | 8 | | | | | |
| 15 | 805300010 | 垫圈 | Washer | 8 | | | | | |
| 16 | 310500231 | 支架 | Bracket | 1 | | | | | |
| 17 | 803173145 | 软管总成 | Hose Assy | 1 | | | | | |
| 18 | 803166487 | 接头 | Adapter | 1 | | | | | |
| 19 | 803172001 | 软管总成 | Hose Assy | 2 | | | | | |

左先导阀

Left Pilot Valve

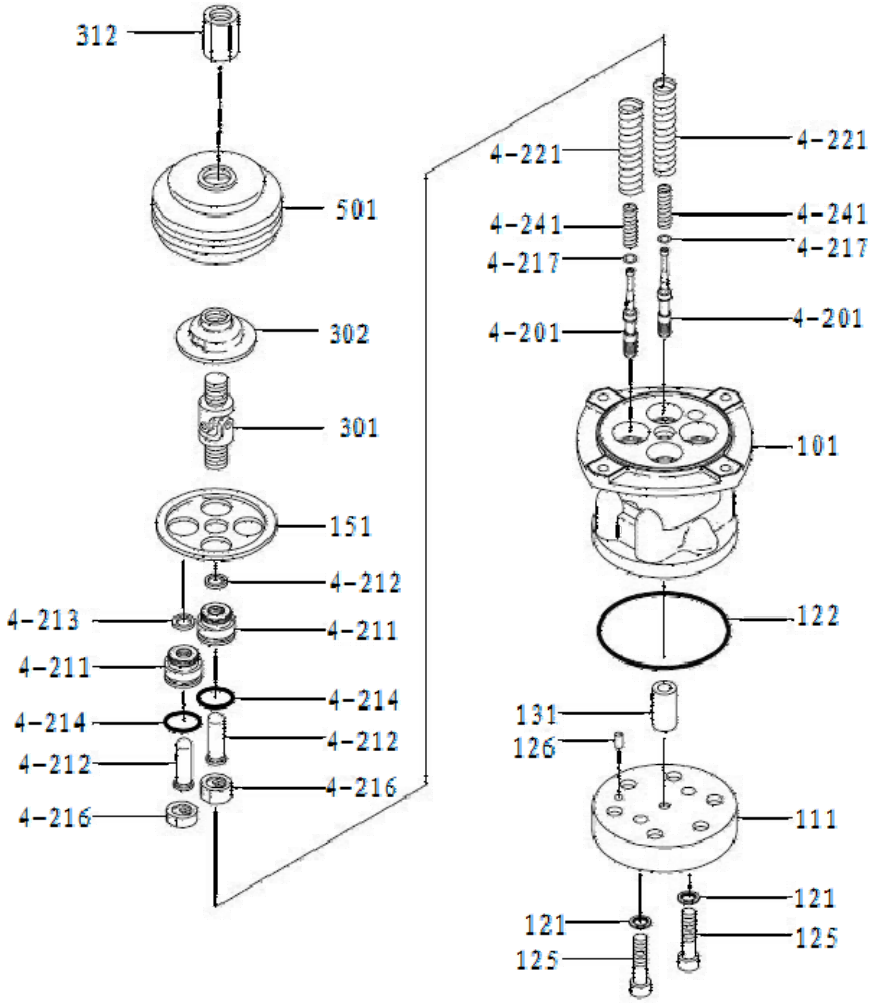

左先导阀 Left Pilot Valve

| 序号 ITEM | 零件代号 Part No | 零件名 | PART NAME | 数量 Q'TY | 服务代码 S.C | 适用机号 SERIAL NO | 互换性 IA | 替换零件 REPLACEABLE PART | |
|---|---|---|---|---|---|---|---|---|---|
| | | | | | | | | 零件代号 Part No | 数量 Q'TY |
| 101 | 860120174 | 护套 | Casing | 1 | D | | | | |
| 111 | 860120175 | 盘 | Plate | 1 | | | | | |
| 121 | 860120176 | 密封垫圈 | Seal Washer | 2 | | | | | |
| 122 | 860120177 | O 型圈 | O-Ring | 1 | | | | | |
| 125 | 860120178 | 螺栓 | Bolt | 2 | | | | | |
| 126 | 860120179 | 弹簧销 | Spring Pin | 1 | | | | | |
| 131 | 860120180 | 衬套 | Bush | 1 | | | | | |
| 151 | 860120181 | 盘 | Plate | 1 | | | | | |
| 201 | 860120182 | 阀芯 | Spool | 4 | D | | | | |
| 211 | 860120183 | 堵头 | Plug | 4 | D | | | | |
| 212 | 860120184 | 推杆 | Push Rod | 4 | | | | | |
| 213 | 860120185 | 密封圈 | Seal | 4 | | | | | |
| 214 | 860120186 | O 形圈 | O-Ring | 4 | D | | | | |
| 216 | 860120187 | 弹簧座 | Spring Seat | 4 | | | | | |
| 217 | 860120188 | 垫圈 | Washer | 4 | | | | | |
| 221 | 860120189 | 弹簧 | Spring | 4 | | | | | |
| 241 | 860120190 | 弹簧 | Spring | 4 | | | | | |
| 301 | 860120191 | 连接件 | Joint | 1 | | | | | |
| 302 | 860120192 | 盘 | Plate | 1 | | | | | |
| 312 | 860120193 | 螺母 | Nut | 1 | | | | | |
| 501 | 860120198 | 防尘罩 | Bellows | 1 | | | | | |
| 601 | 803007152 | 手柄总成（左） | Handle Sub Assy （Lh） | 1 | | | | | |

# 右先导阀

Right Pilot Valve

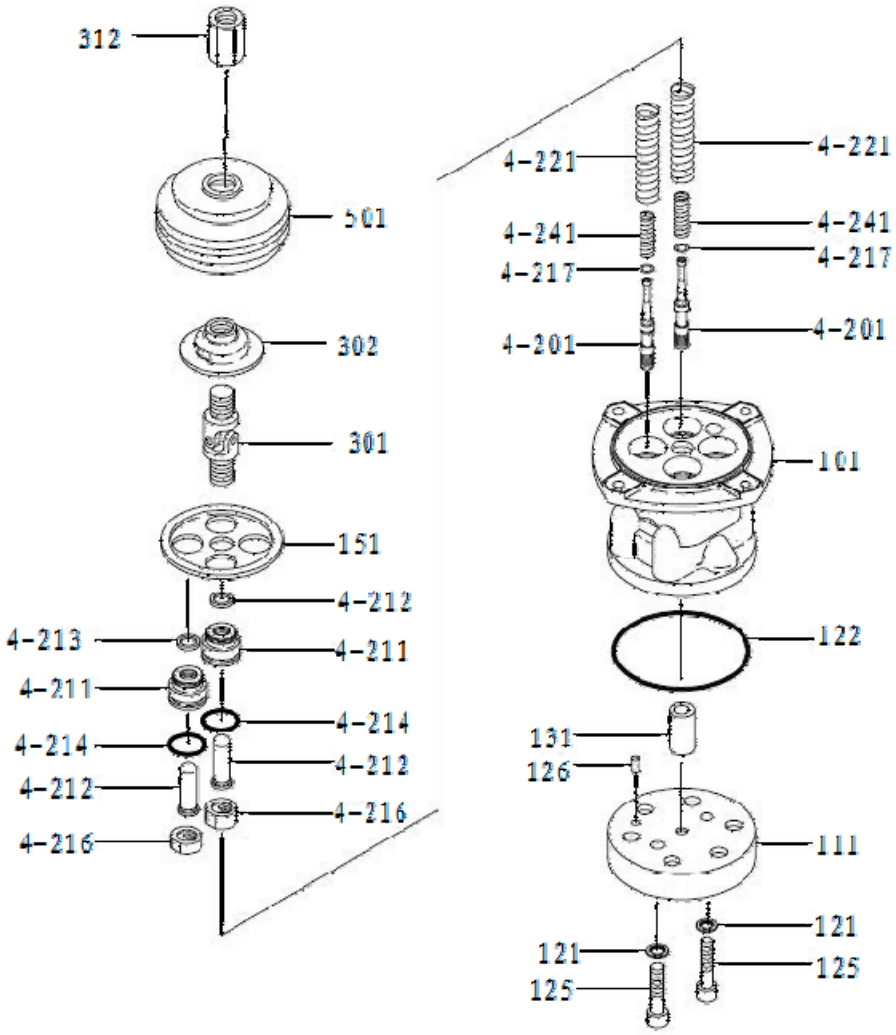

右先导阀 Right Pilot Valve

| 序号 ITEM | 零件代号 Part No | 零件名 | PART NAME | 数量 Q'TY | 服务代码 S.C | 适用机号 SERIAL NO | 互换性 IA | 替换零件 REPLACEABLE PART | |
|---|---|---|---|---|---|---|---|---|---|
| | | | | | | | | 零件代号 Part No | 数量 Q'TY |
| 101 | 860120199 | 衬套 | Casing | 1 | D | | | | |
| 111 | 860120200 | 盘 | Plate | 1 | | | | | |
| 121 | 860120201 | 密封垫圈 | Seal Washer | 2 | | | | | |
| 122 | 860120202 | O 形圈 | O-Ring | 1 | | | | | |
| 125 | 860120203 | 螺栓 | Bolt | 2 | | | | | |
| 126 | 860120204 | 弹簧销 | Spring Pin | 1 | | | | | |
| 131 | 860120205 | 衬套 | Bush | 1 | | | | | |
| 151 | 860120206 | 盘 | Plate | 1 | | | | | |
| 201 | 860120207 | 阀芯 | Spool | 4 | D | | | | |
| 211 | 860120208 | 堵头 | Plug | 4 | D | | | | |
| 212 | 860120209 | 推杆 | Push Rod | 4 | | | | | |
| 213 | 860120210 | 密封圈 | Seal | 4 | | | | | |
| 214 | 860120211 | O 形圈 | O-Ring | 4 | D | | | | |
| 216 | 860120212 | 弹簧座 | Spring Seat | 4 | | | | | |
| 217 | 860120213 | 垫圈 | Washer | 4 | | | | | |
| 221 | 860120214 | 弹簧 | Spring | 4 | | | | | |
| 241 | 860120215 | 弹簧 | Spring | 4 | | | | | |
| 301 | 860120216 | 连接件 | Joint | 1 | | | | | |
| 302 | 860120217 | 盘 | Plate | 1 | | | | | |
| 312 | 860120218 | 螺母 | Nut | 1 | | | | | |
| 501 | 860120223 | 防尘罩 | Handle Sub Assy | 1 | | | | | |
| 601 | 803007151 | 手柄总成（右） | （Rh） | 1 | | | | | |

# 脚先导阀

Pedal Pilot Valve

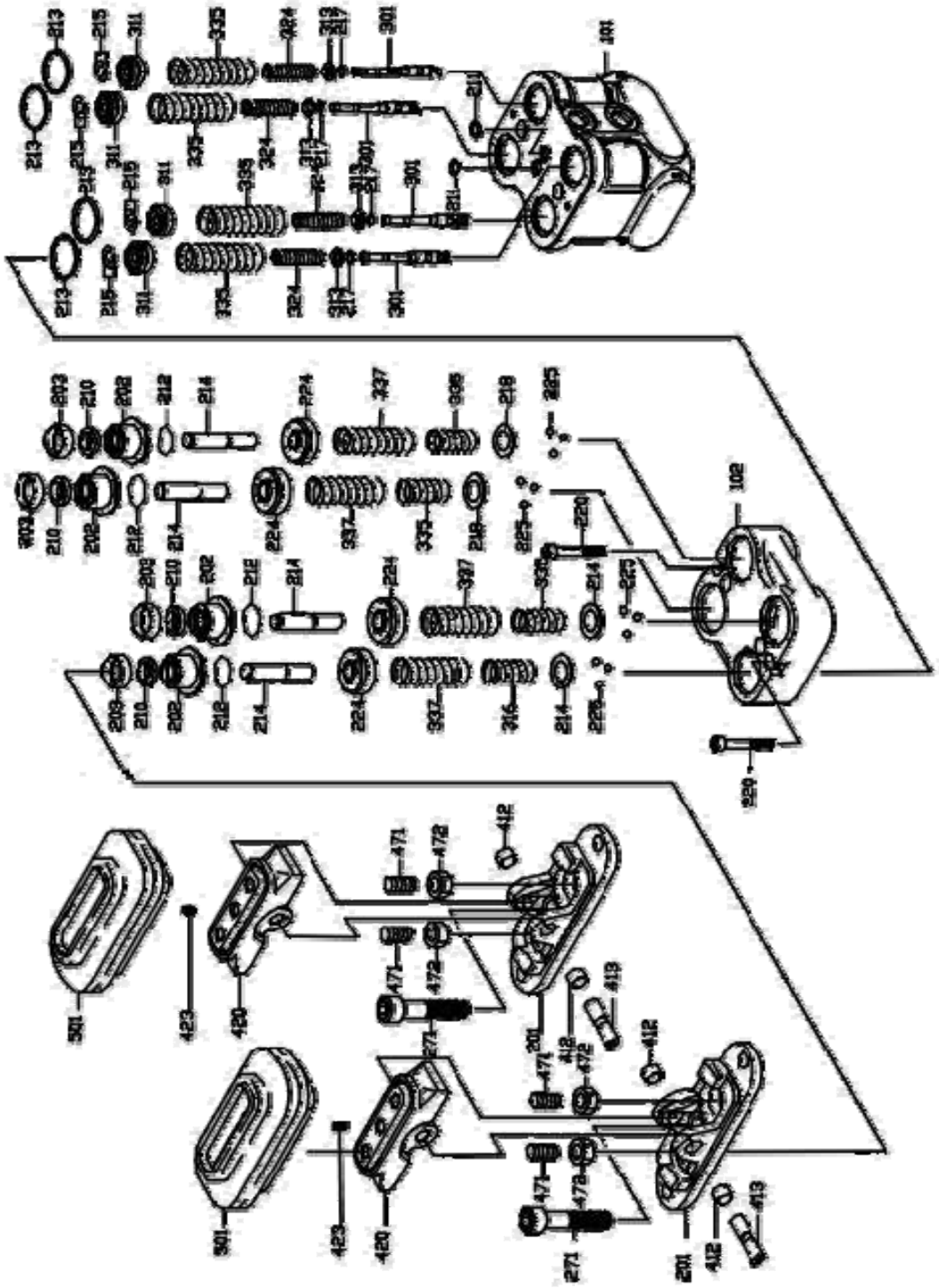

脚先导阀 Pedal Pilot Valve

| 序号 ITEM | 零件代号 Part No | 零件名 | PART NAME | 数量 Q'TY | 服务代码 S.C | 适用机号 SERIAL NO | 互换性 IA | 替换零件 REPLACEABLE PART | |
|---|---|---|---|---|---|---|---|---|---|
| | | | | | | | | 零件代号 Part No | 数量 Q'TY |
| 101 | 860120224 | 阀体 | Casing | 1 | D | | | | |
| 102 | 860120225 | 阀盖 | Casing(Damper) | 1 | | | | | |
| 151 | 860120226 | 堵头 | Plug | 4 | | | | | |
| 153 | 860120227 | ROH 堵头 | Roh Plug | 2 | | | | | |
| 163 | 860120228 | O 形圈 | O-Ring | 2 | | | | | |
| 191 | 860120229 | 阀座 | Seat | 2 | | | | | |
| 192 | 860120230 | 阀座 | Seat | 2 | | | | | |
| 193 | 860120231 | 衬套 | Bush | 2 | | | | | |
| 194 | 860120232 | 轴承盖钢珠 | Steel Ball For Bearing | 2 | | | | | |
| 201 | 860120233 | 端盖 | Cover | 2 | | | | | |
| 202 | 860120234 | 堵头 | Plug | 4 | D | | | | |
| 203 | 860120235 | 润滑脂盖 | Grease Cap | 4 | | | | | |
| 210 | 860120236 | 垫片 | Packing | 4 | | | | | |
| 211 | 860120237 | O 形圈 | O-Ring | 2 | | | | | |
| 212 | 860120238 | O 形圈 | O-Ring | 4 | D | | | | |
| 213 | 860120239 | O 形圈 | O-Ring | 4 | | | | | |
| 214 | 860120240 | 推杆 | Push Rod | 4 | | | | | |
| 215 | 860120241 | 垫圈 | Washer | 8 | | | | | |
| 217 | 860120242 | 垫圈 | Washer | 4 | | | | | |
| 218 | 860120243 | 弹簧座 | Spring Seat | 4 | | | | | |
| 220 | 860120244 | 螺钉 | Screw,Hex.S.H.C. | 2 | | | | | |
| 224 | 860120245 | 活塞 | Piston | 4 | | | | | |
| 225 | 860120246 | 轴承钢珠 | Steel Ball For Bearing | 12 | | | | | |
| 271 | 860120247 | 螺栓 | Bolt | 2 | | | | | |
| 301 | 860120248 | 阀芯 | Spool | 4 | D | | | | |
| 311 | 860120249 | 弹簧座 | Spring Seat | 4 | | | | | |
| 313 | 860120250 | 垫圈 | Washer | 4 | | | | | |
| 324 | 860120251 | 弹簧 | Spring | 4 | | | | | |
| 335 | 860120252 | 弹簧 | Spring | 4 | | | | | |
| 336 | 860120253 | 弹簧 | Spring | 4 | | | | | |
| 337 | 860120254 | 弹簧 | Spring | 4 | | | | | |
| 412 | 860120255 | 轴套 | Du-Bushing | 4 | | | | | |
| 413 | 860120256 | 凸轮轴 | Cam Shaft | 2 | | | | | |
| 420 | 860120257 | 凸轮 | Cam | 2 | | | | | |
| 423 | 860120258 | 定位螺钉 | Set Screw | 2 | | | | | |
| 471 | 860120259 | 螺钉 | Screw | 4 | | | | | |
| 472 | 860120260 | 螺母 | Nut | 4 | | | | | |
| 501 | 860120261 | 防尘罩 | BELLOWS | 2 | | | | | |

# 电气系统

Electric System

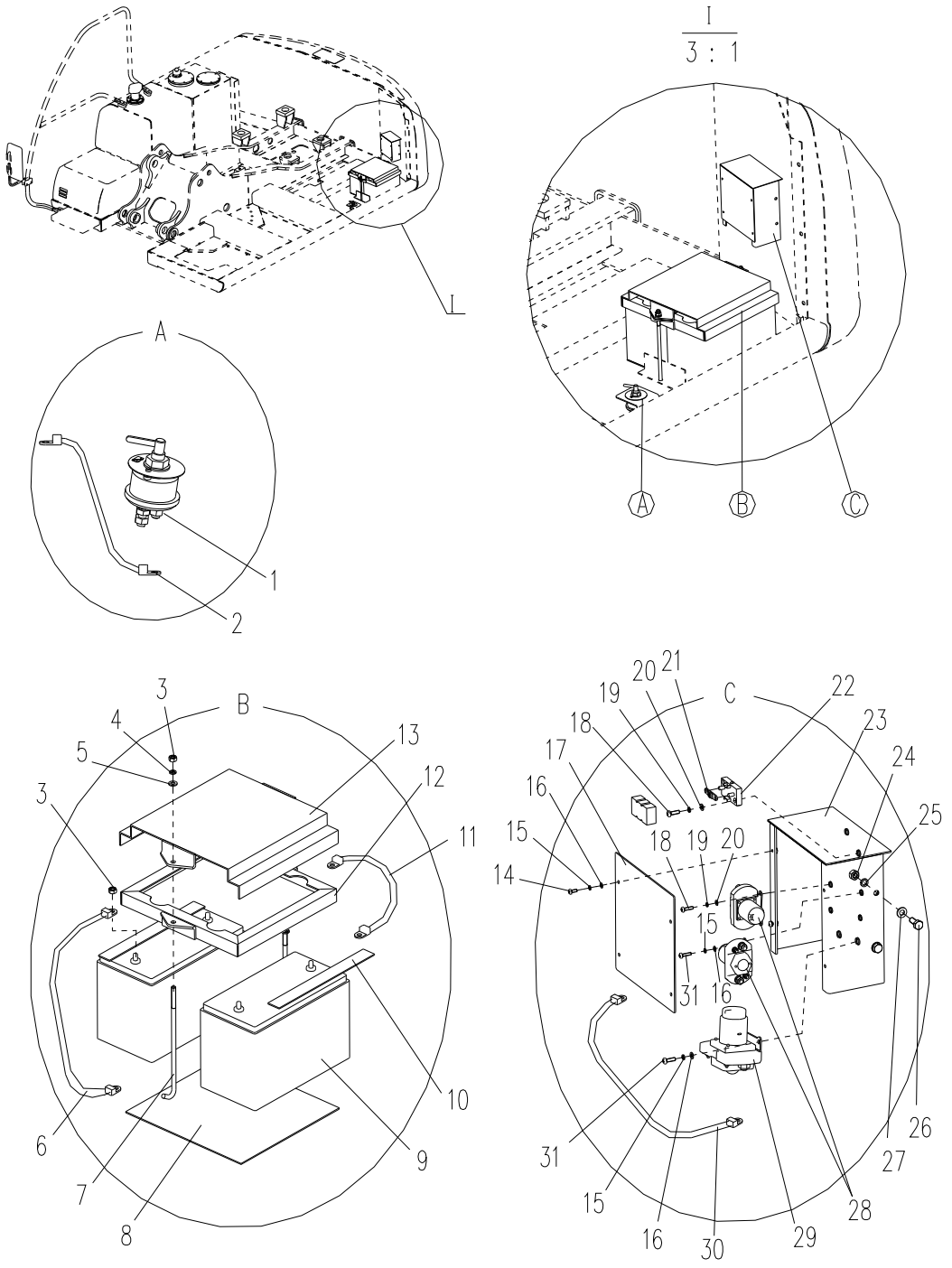

电气系统 Electric System

| 序号 ITEM | 零件代号 Part No | 零件名 | PART NAME | 数量 Q'TY | 服务代码 S.C | 适用机号 SERIAL NO | 互换性 IA | 替换零件 REPLACEABLE PART | |
|---|---|---|---|---|---|---|---|---|---|
| | | | | | | | | 零件代号 Part No | 数量 Q'TY |
| 1 | 803608695 | 电源总开关 | Main Power Switch | 1 | | | | | |
| 2 | 803604869 | 电瓶线 | Cable | 1 | | | | | |
| 3 | 805200053 | 螺母 M10 | Nut | 6 | | | | | |
| 4 | 805300014 | 垫圈 10 | Washer | 2 | | | | | |
| 5 | 805300017 | 垫圈 10 | Washer | 2 | | | | | |
| 6 | 803604701 | 电瓶线 | Cable | 1 | | | | | |
| 7 | 310500252 | 拉杆 | Haulm | 2 | | | | | |
| 8 | 310500254 | 橡胶垫 | Rubber Mat | 1 | | | | | |
| 9 | 803502444 | 电瓶 | Battery | 2 | | | | | |
| 10 | 310500253 | 橡胶垫 | Rubber Mat | 2 | | | | | |
| 11 | 803608711 | 电瓶线 | Cable | 1 | | | | | |
| 12 | 310500250 | 压架 | Press Frame | 1 | | | | | |
| 13 | 310500251 | 压盖 | Cover | 1 | | | | | |
| 14 | 805100409 | 螺钉 M4×10 | Screw | 4 | | | | | |
| 15 | 805300027 | 垫圈 4 | Washer | 8 | | | | | |
| 16 | 805300157 | 垫圈 4 | Washer | 8 | | | | | |
| 17 | 310500762 | 前板 | Board | 1 | | | | | |
| 18 | 805103605 | 螺钉 M6×16 | Screw | 2 | | | | | |
| 19 | 805300030 | 垫圈 6 | Washer | 4 | | | | | |
| 20 | 805302506 | 垫圈 6 | Washer | 4 | | | | | |
| 21 | 803609631 | 一路保险丝 | Fuse | 1 | | | | | |
| 22 | 803704911 | 一路保险丝座 | Fuse Box | 1 | | | | | |
| 23 | 310500761 | 后箱体 | Box | 1 | | | | | |
| 24 | 805200045 | 螺母 M8 | Nut | 4 | | | | | |
| 25 | 805300069 | 垫圈 8 | Washer | 4 | | | | | |
| 26 | 805000018 | 螺栓 M8×20 | Bolt | 4 | | | | | |
| 27 | 805300010 | 垫圈 8 | Washer | 4 | | | | | |
| 28 | 803608739 | 继电器 | Relay | 2 | | | | | |
| 29 | 803608697 | 电源继电器 | PowerSupply Relay | 1 | | | | | |
| 30 | 803604698 | 电瓶线 | Cable | 1 | | | | | |
| 31 | 805100271 | 螺钉 M4×16 | Screw | 4 | | | | | |

# 电气系统

## Electric System

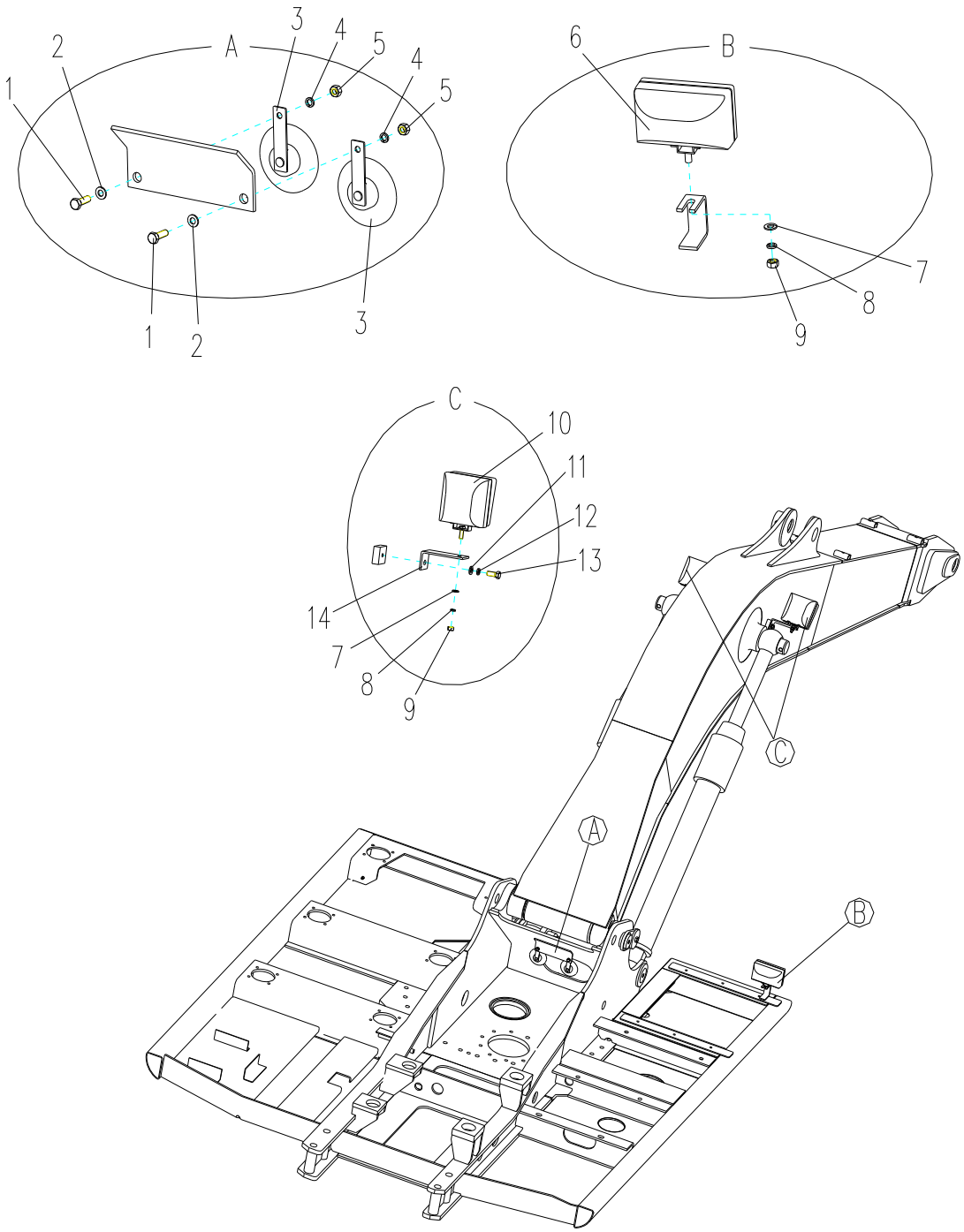

电气系统 Electric System

| 序号 ITEM | 零件代号 Part No | 零件名 | PART NAME | 数量 Q'TY | 服务代码 S.C | 适用机号 SERIAL NO | 互换性 IA | 替换零件 REPLACEABLE PART | |
|---|---|---|---|---|---|---|---|---|---|
| | | | | | | | | 零件代号 Part No | 数量 Q'TY |
| 1 | 805000017 | 螺栓 M8×25 | Screw | 2 | | | | | |
| 2 | 805300069 | 垫圈 8 | Washer | 2 | | | | | |
| 3 | 803504609 | 喇叭 | Horm | 2 | | | | | |
| 4 | 805300010 | 垫圈 8 | Washer | 2 | | | | | |
| 5 | 805200045 | 螺母 M8 | Nut | 2 | | | | | |
| 6 | 819909306 | 工作灯 | Work lamp | 1 | | | | | |
| 7 | 805300017 | 垫圈 10 | Washer | 2 | | | | | |
| 8 | 805300014 | 垫圈 10 | Washer | 2 | | | | | |
| 9 | 805200053 | 螺母 M10 | Nut | 2 | | | | | |
| 10 | 803504605 | 臂灯 | Arm lamp | 2 | | | | | |
| 11 | 805300020 | 垫圈 12 | Washer | 2 | | | | | |
| 12 | 805300018 | 垫圈 12 | Washer | 2 | | | | | |
| 13 | 805004804 | 螺栓 M12×30 | Screw | 2 | | | | | |
| 14 | 310500262 | 臂灯支架 | Arm lamp bracket | 2 | | | | | |

# 电气系统

Electric System

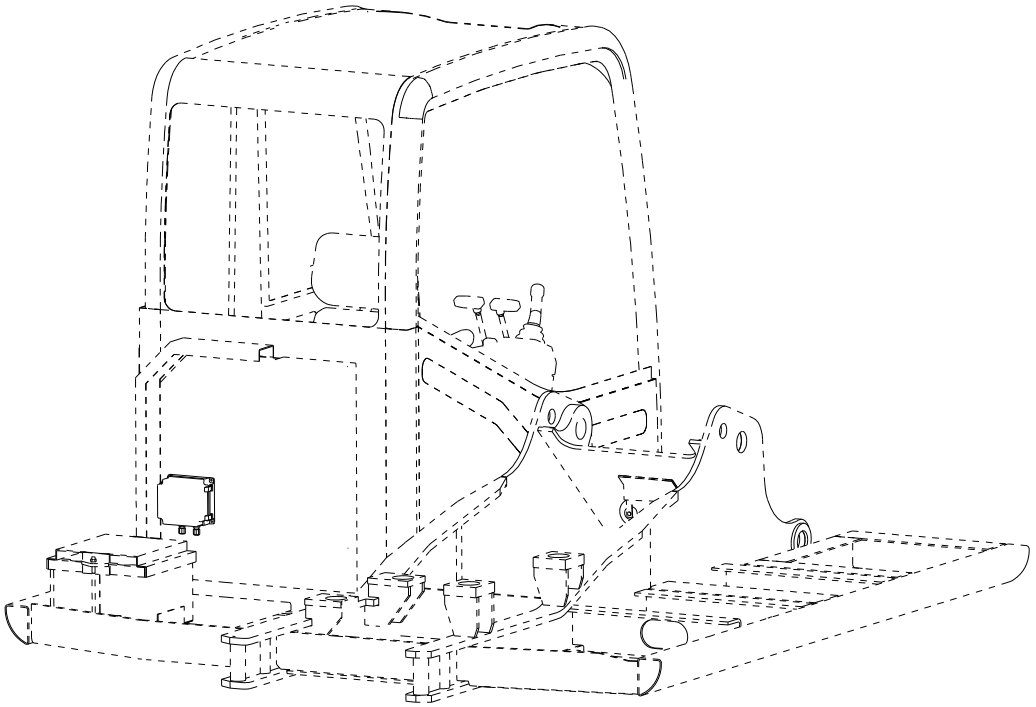

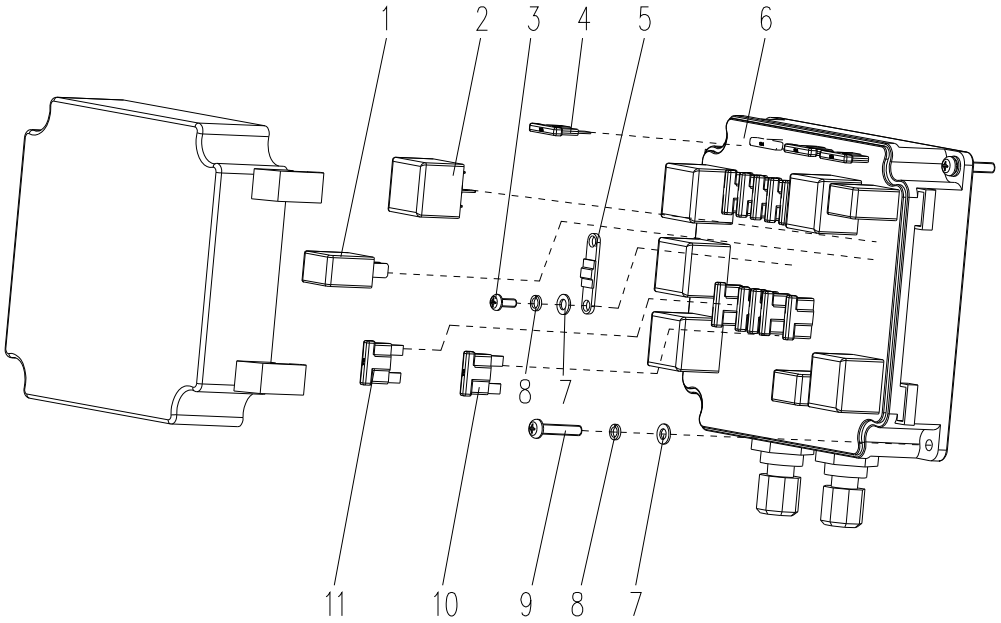

电气系统 Electric System

| 序号 ITEM | 零件代号 Part No | 零件名 | PART NAME | 数量 Q'TY | 服务代码 S.C | 适用机号 SERIAL NO | 互换性 IA | 替换零件 REPLACEABLE PART | |
|---|---|---|---|---|---|---|---|---|---|
| | | | | | | | | 零件代号 Part No | 数量 Q'TY |
| 1 | 803609934 | 继电器 | Relay | 2 | | | | | |
| 2 | 803609933 | 继电器 | Relay | 4 | | | | | |
| 3 | 805103624 | 螺钉 M5×8 | Screw | 2 | | | | | |
| 4 | 803608735 | 保险丝 10A | Fuse | 14 | | | | | |
| 5 | 803609708 | 保险片 30A | Fuse | 1 | | | | | |
| 6 | 803704447 | 中央电气控制盒 | Electric Box | 1 | | | | | |
| 7 | 805300119 | 垫圈 5 | Washer | 6 | | | | | |
| 8 | 805300109 | 垫圈 5 | Washer | 6 | | | | | |
| 9 | 805100084 | 螺钉 M5×25 | Screw | 4 | | | | | |
| 10 | 803608737 | 保险丝 20A | Fuse | 1 | | | | | |
| 11 | 803608736 | 保险丝 15A | Fuse | 2 | | | | | |

# 电气系统

## Electric System

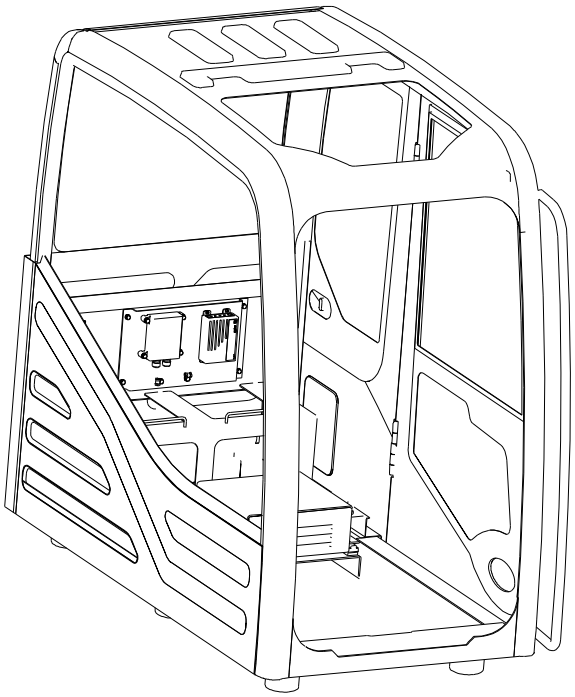

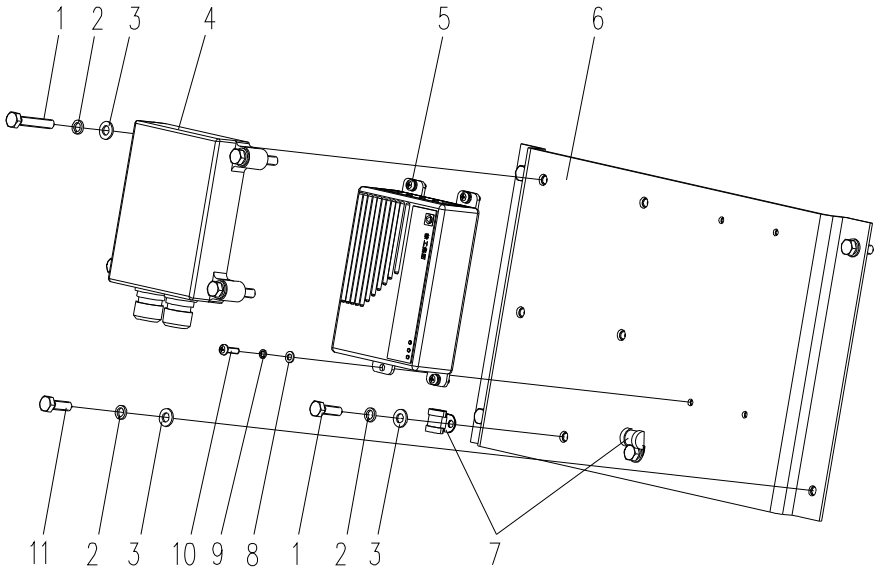

电气系统 Electric System

| 序号 ITEM | 零件代号 Part No | 零件名 | PART NAME | 数量 Q'TY | 服务代码 S.C | 适用机号 SERIAL NO | 互换性 IA | 替换零件 REPLACEABLE PART | |
|---|---|---|---|---|---|---|---|---|---|
| | | | | | | | | 零件代号 Part No | 数量 Q'TY |
| 1 | 805000137 | 螺栓 M8×40 | Screw | 4 | | | | | |
| 2 | 805300010 | 垫圈 8 | Washer | 10 | | | | | |
| 3 | 805300069 | 垫圈 8 | Washer | 10 | | | | | |
| 4 | 803504645 | 主控制器 | Main Controller | 1 | | | | | |
| 5 | 803504594 | 控制器 | Controller | 1 | | | | | |
| 6 | 310500003 | 安装板 | Board | 1 | | | | | |
| 7 | 801905478 | 单偏式带胶套卡箍 | Clip | 2 | | | | | |
| 8 | 805300119 | 垫圈 5 | Washer | 4 | | | | | |
| 9 | 805300109 | 垫圈 5 | Washer | 4 | | | | | |
| 10 | 805100275 | 螺钉 M5×16 | Screw | 4 | | | | | |
| 11 | 805000018 | 螺栓 M8×20 | Screw | 4 | | | | | |

# 电气系统

## Electric System

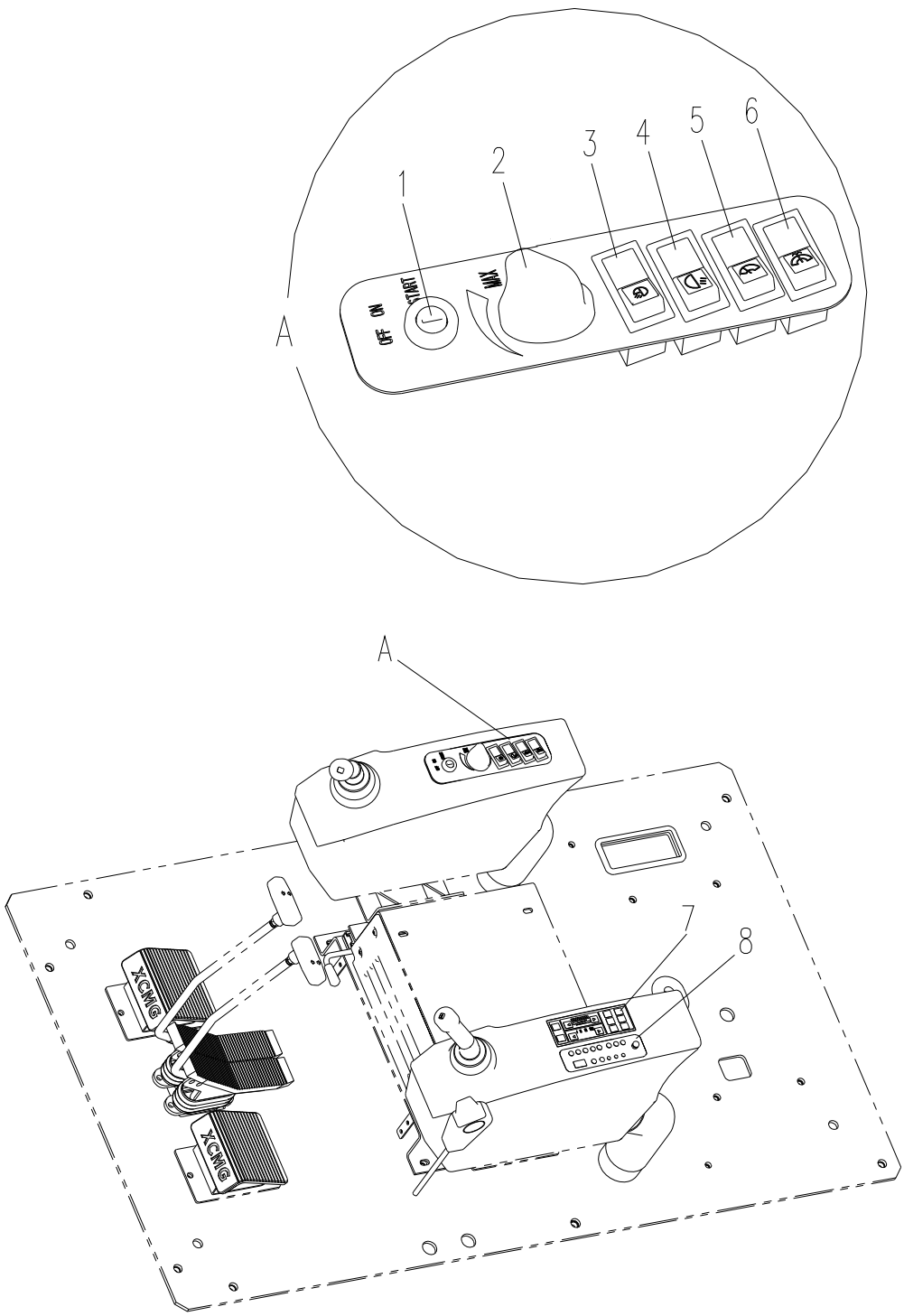

电气系统 Electric System

| 序号 ITEM | 零件代号 Part No | 零件名 | PART NAME | 数量 Q'TY | 服务代码 S.C | 适用机号 SERIAL NO | 互换性 IA | 替换零件 REPLACEABLE PART | |
|---|---|---|---|---|---|---|---|---|---|
| | | | | | | | | 零件代号 Part No | 数量 Q'TY |
| 1 | 803608698 | 钥匙开关 | Key switch | 1 | | | | | |
| 2 | 803608815 | 电位计(配操作旋钮) | Potentiometer | 1 | | | | | |
| 3 | 803608705 | 动臂灯翘板开关 | Switch | 1 | | | | | |
| | 803608002 | 标志板 3.31 | Sign | 1 | | | | | |
| | 803504776 | 指示灯部件 | | 1 | | | | | |
| 4 | 803608705 | 转台灯翘板开关 | Switch | 1 | | | | | |
| | 803704504 | 标志板 3.32 | Sign | 1 | | | | | |
| | 803504776 | 指示灯部件 | | 1 | | | | | |
| 5 | 803608708 | 雨刮翘板开关 | Switch | 1 | | | | | |
| | 801900413 | 标志板 2.5 | Sign | 1 | | | | | |
| | 803504776 | 指示灯部件 | | 1 | | | | | |
| 6 | 803608706 | 洗涤翘板开关 | Switch | 1 | | | | | |
| | 801905349 | 标志板 2.6 | Sign | 1 | | | | | |
| | 803504776 | 指示灯部件 | | 1 | | | | | |
| 7 | 803504622 | 空调控制器 | Air condition Controller | 1 | | | | | |
| 8 | 803504612 | 收音机 | Radio | 1 | | | | | |

# 电气系统

# Electric System

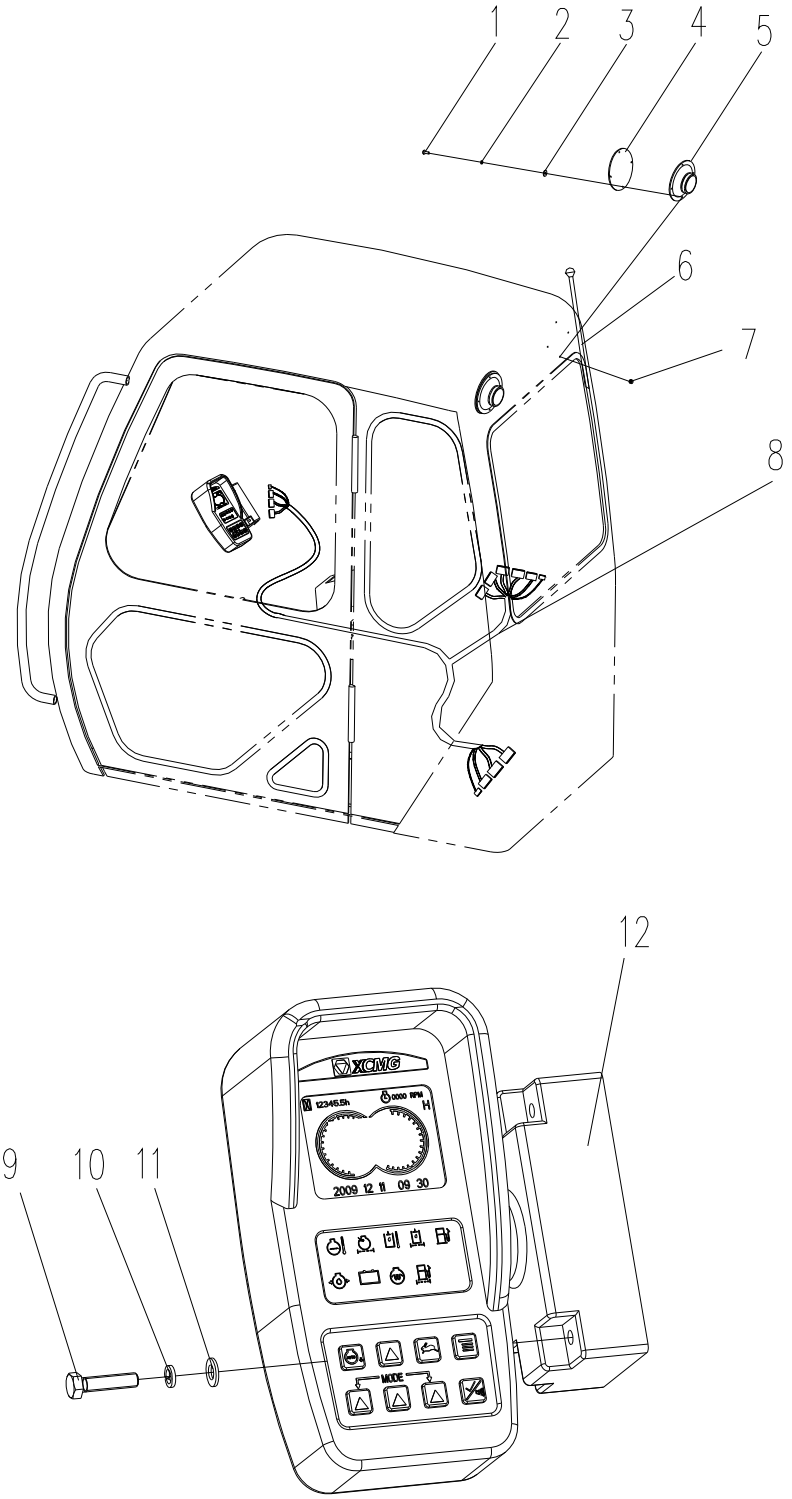

电气系统 Electric System

| 序号 ITEM | 零件代号 Part No | 零件名 | PART NAME | 数量 Q'TY | 服务代码 S.C | 适用机号 SERIAL NO | 互换性 IA | 替换零件 REPLACEABLE PART | |
|---|---|---|---|---|---|---|---|---|---|
| | | | | | | | | 零件代号 Part No | 数量 Q'TY |
| 1 | 805000111 | 螺栓 M4×20 | Screw | 8 | | | | | |
| 2 | 805300027 | 垫圈 4 | Washer | 8 | | | | | |
| 3 | 805300157 | 垫圈 4 | Washer | 8 | | | | | |
| 4 | 803504617 | 扬声器罩 | Reproducer Net | 2 | | | | | |
| 5 | 819908756 | 扬声器 | Reproducer | 2 | | | | | |
| 6 | 803608828 | 收音机天线 | Antenna | 1 | | | | | |
| 7 | 805200082 | 螺母 M4 | Nut | 8 | | | | | |
| 8 | 310500245 | 监控器线束 | Monitor cable | 1 | | | | | |
| 9 | 805000020 | 螺栓 M8×30 | Screw | 6 | | | | | |
| 10 | 805300010 | 垫圈 8 | Washer | 6 | | | | | |
| 11 | 805300069 | 垫圈 8 | Washer | 6 | | | | | |
| 12 | 803504721 | 电子监控器 | Palmation monitor | 1 | | | | | |

# 电气系统

Electric System

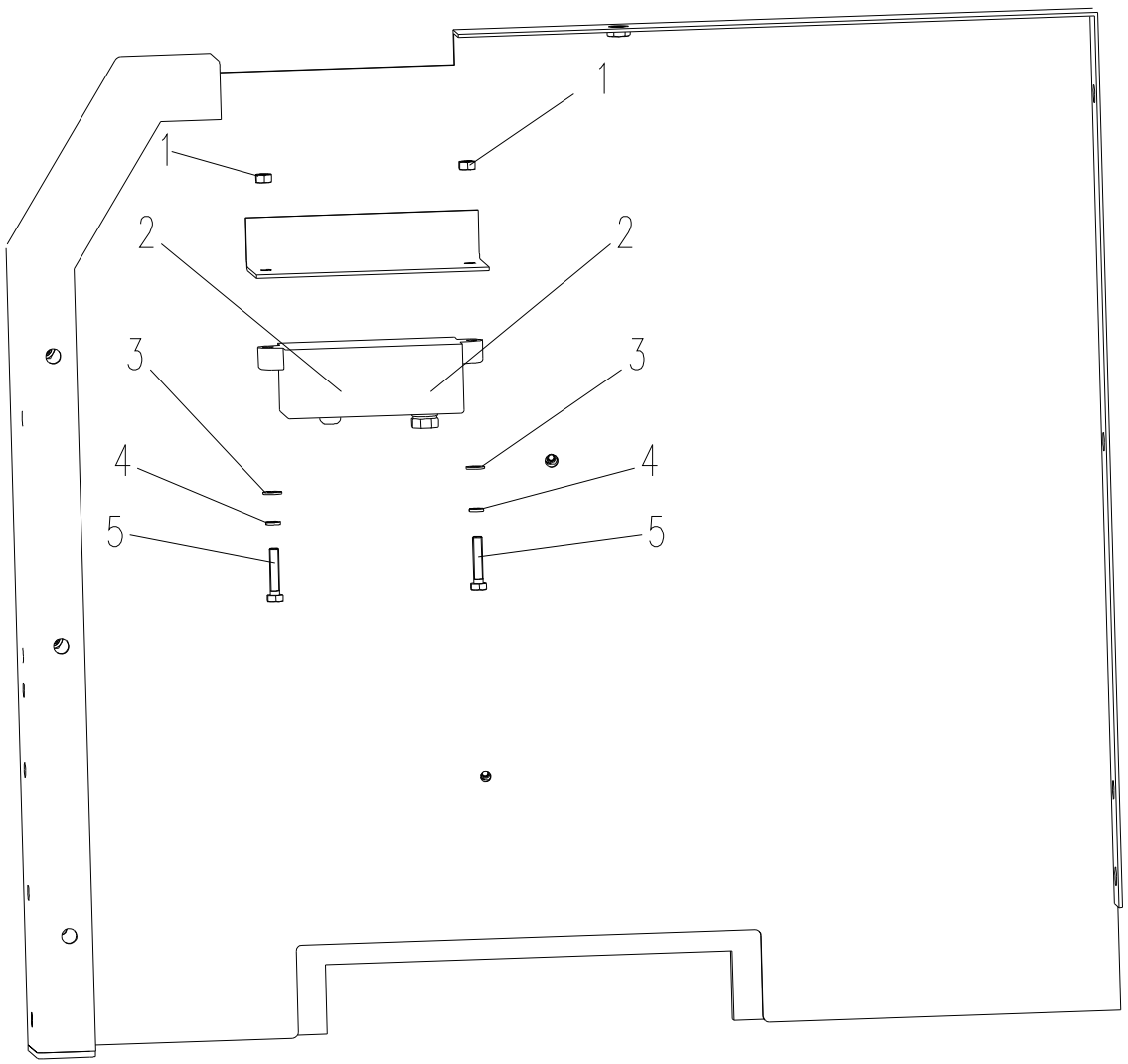

电气系统 Electric System

| 序号 ITEM | 零件代号 Part No | 零件名 | PART NAME | 数量 Q'TY | 服务代码 S.C | 适用机号 SERIAL NO | 互换性 IA | 替换零件 REPLACEABLE PART | |
|---|---|---|---|---|---|---|---|---|---|
| | | | | | | | | 零件代号 Part No | 数量 Q'TY |
| 1 | 805200045 | 螺母 M8 | Nut | 2 | | | | | |
| 2 | 800104271 | 控制马达 | Motor | 1 | | | | | |
| 3 | 805300069 | 垫圈 8 | Washer | 2 | | | | | |
| 4 | 805300010 | 垫圈 8 | Washer | 2 | | | | | |
| 5 | 805000137 | 螺栓 M8×40 | Screw | 2 | | | | | |

# 电气系统

Electric System

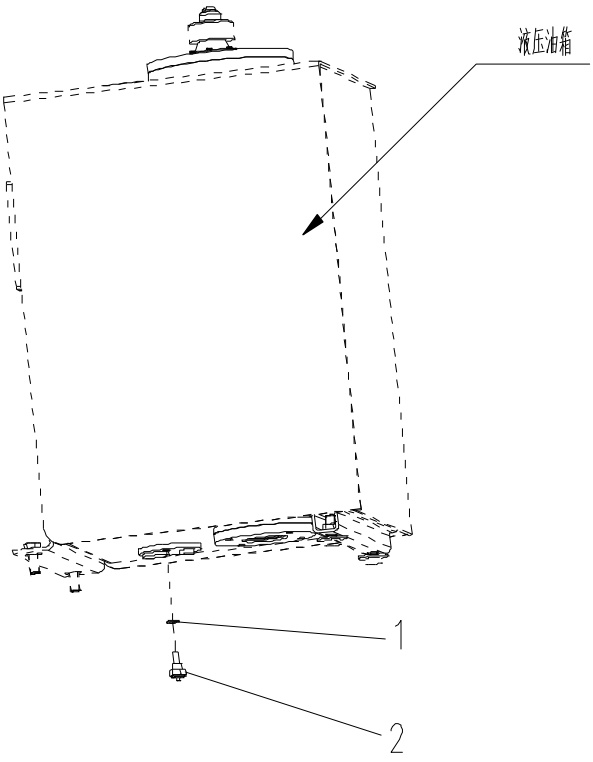


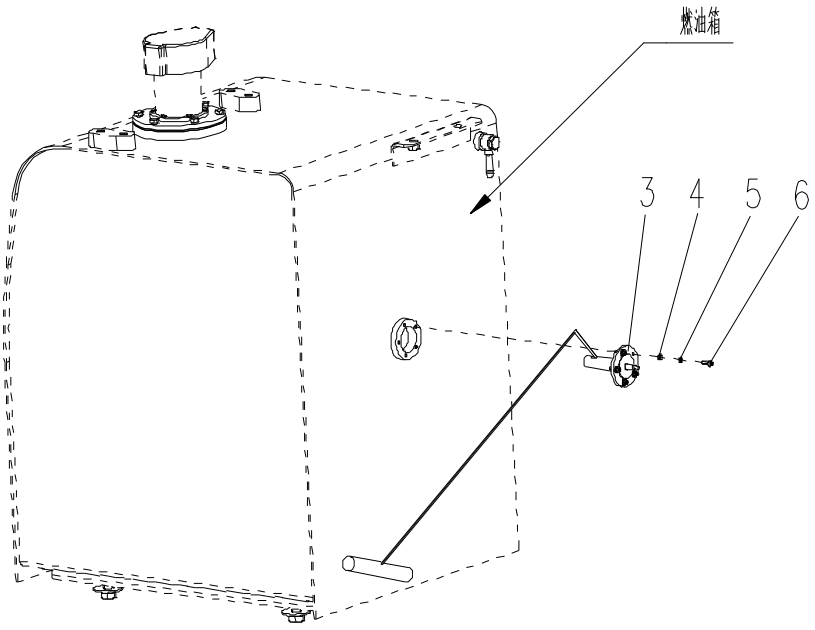

电气系统 Electric System

| 序号 ITEM | 零件代号 Part No | 零件名 | PART NAME | 数量 Q'TY | 服务代码 S.C | 适用机号 SERIAL NO | 互换性 IA | 替换零件 REPLACEABLE PART | |
|---|---|---|---|---|---|---|---|---|---|
| | | | | | | | | 零件代号 Part No | 数量 Q'TY |
| 1 | 805300024 | 组合垫圈 | Washer | 1 | | | | | |
| 2 | 803504717 | 液压油温开关 | Temp Switch | 1 | | | | | |
| 3 | 805103604 | 螺钉 M5×16 | Screw | 5 | | | | | |
| 4 | 805300109 | 垫圈 5 | Washer | 5 | | | | | |
| 5 | 805300119 | 垫圈 5 | Washer | 5 | | | | | |
| 6 | 803504597 | 燃油传感器 | Fuel Level Sensor | 1 | | | | | |

电气系统

Electric System

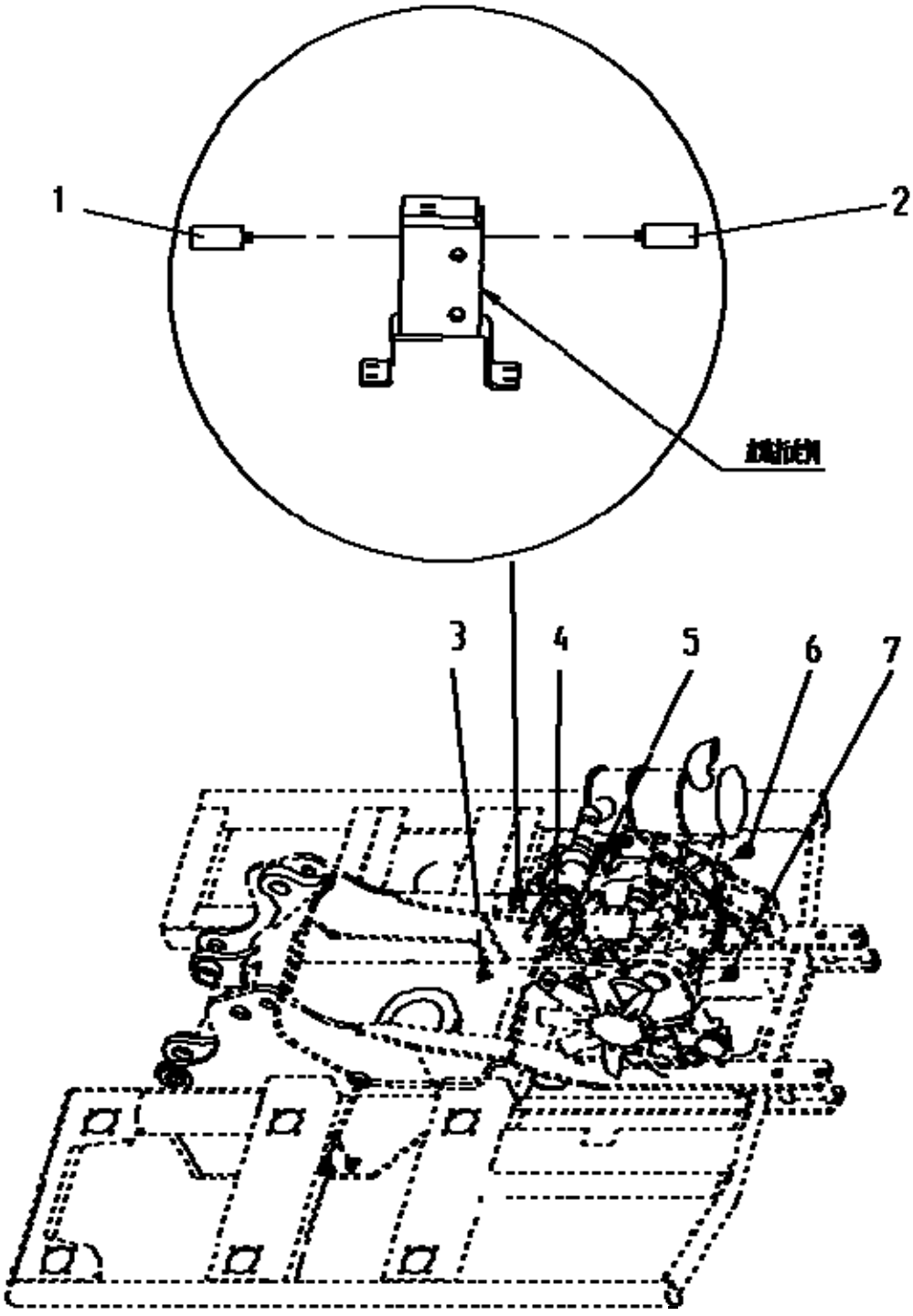

电气系统 Electric System

| 序号 ITEM | 零件代号 Part No | 零件名 | PART NAME | 数量 Q'TY | 服务代码 S.C | 适用机号 SERIAL NO | 互换性 IA | 替换零件 REPLACEABLE PART | |
|---|---|---|---|---|---|---|---|---|---|
| | | | | | | | | 零件代号 Part No | 数量 Q'TY |
| 1 | 819908726 | 0110-407 02-1-026 | Pressure Switch | 1 | | | | | |
| | | 压力开关 0.7MPA | | 1 | | | | | |
| 2 | 803538020 | 0110-41103-1-043 | Pressure Switch | 1 | | | | | |
| | | 压力开关 1.5MPa | | 1 | | | | | |
| 3 | 310500246 | 主线束 | Main Harness | 1 | | | | | |
| 4 | 803604698 | 电瓶线 | Cable | 1 | | | | | |
| 5 | 803604711 | 电瓶线 | Cable | 1 | | | | | |
| 6 | 803504642 | 转速传感器 | Tacho sensor | | | | | | |
| 7 | 803507313 | 4984792 机油压力开关 | Oil Press SW | | | | | | |

# 空调系统

# Air Conditioner System

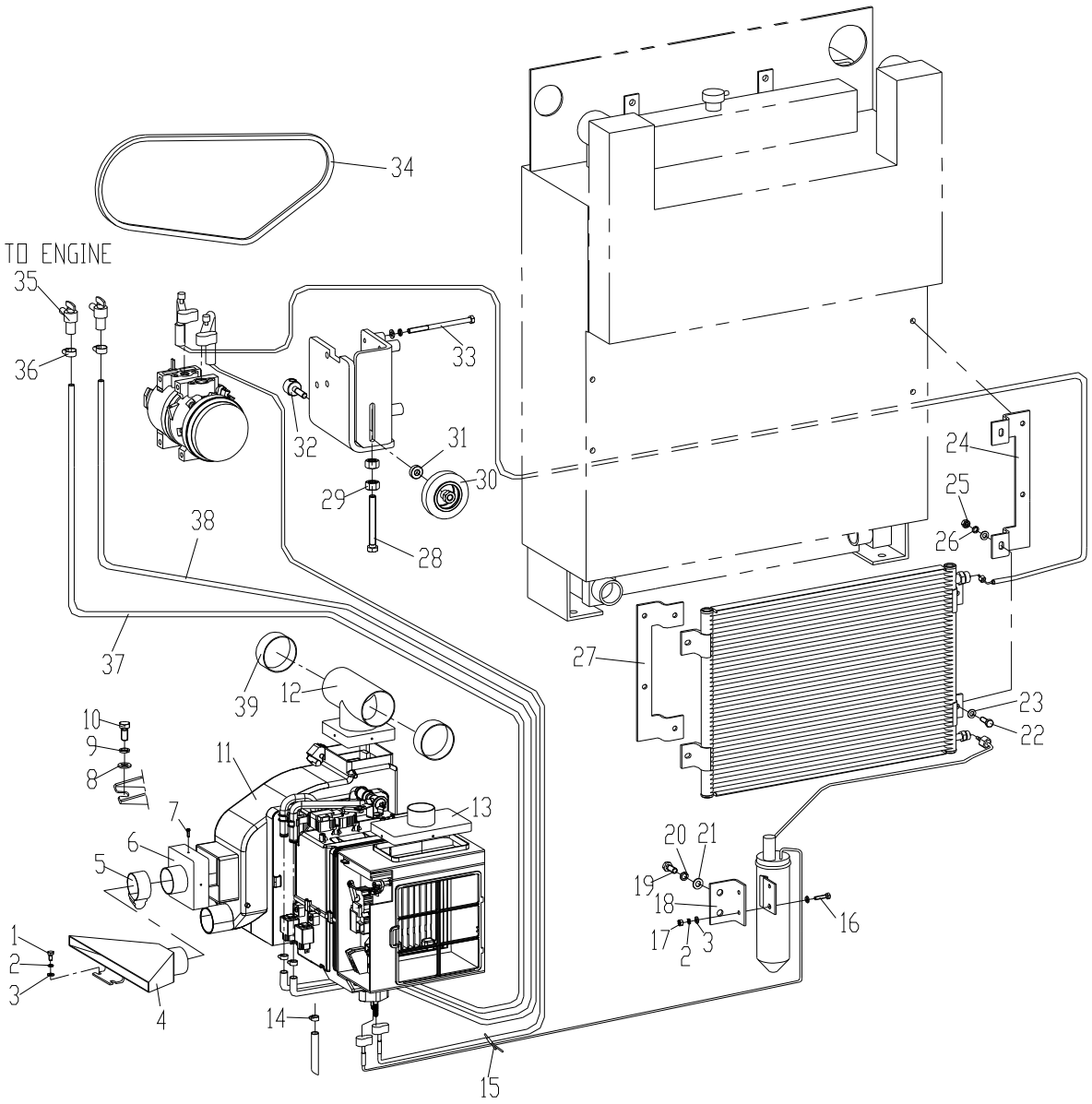

空调系统 Air Conditioner System

| 序号 ITEM | 零件代号 Part No | 零件名 | PART NAME | 数量 Q'TY | 服务代码 S.C | 适用机号 SERIAL NO | 互换性 IA | 替换零件 REPLACEABLE PART | |
|---|---|---|---|---|---|---|---|---|---|
| | | | | | | | | 零件代号 Part No | 数量 Q'TY |
| 1 | 805000008 | 螺栓 M6×12 | Bolt | 2 | | | | | |
| 2 | 805300030 | 垫圈 6 | Washer | 5 | | | | | |
| 3 | 805300029 | 垫圈 6 | Washer | 6 | | | | | |
| 4 | 310800531 | 下出风口 | Place with a draught | 1 | | | | | |
| 5 | 800514235 | 软管卡箍 φ40-φ60 | Hoop | 4 | | | | | |
| 6 | 310800527 | 前出风口 | Place with a draught | 1 | | | | | |
| 7 | 819908925 | 螺钉 ST3.5×9.5 | Bolt | 12 | | | | | |
| 8 | 805300020 | 垫圈 12 | Washer | 4 | | | | | |
| 9 | 805300018 | 垫圈 12 | Washer | 4 | | | | | |
| 10 | 805000715 | 螺栓 M12X25 | Bolt | 4 | | | | | |
| 11 | 803504602 | 空调总成 | Evaporator Assembly | 1 | | | | | |
| 12 | 310800529 | 上出风口 | Place with a draught | 1 | | | | | |
| 13 | 310800528 | 上进风口 | Place with a draught | 1 | | | | | |
| 14 | 310500696 | 软管卡箍 φ10-φ16 | Hoop | 1 | | | | | |
| 15 | 801905691 | 扎带 | Band | 30 | | | | | |
| 16 | 805000525 | 螺栓 M6×20 | Bolt | 2 | | | | | |
| 17 | 805200053 | 螺母 M6 | Nut | 3 | | | | | |
| 18 | 310500416 | 干燥器安装支架 | Liquid Tank Bracket | 1 | | | | | |
| 19 | 805000727 | 螺栓 M10×25 | Bolt | 2 | | | | | |
| 20 | 805300014 | 垫圈 10 | Washer | 2 | | | | | |
| 21 | 805300017 | 垫圈 10 | Washer | 2 | | | | | |
| 22 | 805000017 | 螺栓 M8×25 | Bolt | 8 | | | | | |
| 23 | 805300069 | 垫圈 8 | Washer | 16 | | | | | |
| 24 | 310500412 | 冷凝器支架 II | Bracket of condenser | 1 | | | | | |
| 25 | 805200045 | 螺母 M8 | Nut | 15 | | | | | |
| 26 | 805300010 | 垫圈 8 | Washer | 13 | | | | | |
| 27 | 310500417 | 冷凝器支架 I | Bracket of condenser | 1 | | | | | |
| 28 | 805000263 | 螺栓 M12×90 | Bolt | 1 | | | | | |
| 29 | 805200049 | 螺母 M12 | Nut | 2 | | | | | |
| 30 | 800309026 | 张紧轮 | Rising Close set | 1 | | | | | |
| 31 | 310500414 | 轴挡 | Shaft gear | 1 | | | | | |
| 32 | 310500413 | 轴 | Axis | 1 | | | | | |
| 33 | 310500415 | 螺栓 | Bolt | 4 | | | | | |
| 34 | 819908680 | 汽车 V 带（有齿） AV13×1200 | Belt | 1 | | | | | |
| 35 | 819908894 | 热水阀组件 | Valve of hot water | 2 | | | | | |
| 36 | 803172657 | 软管卡箍 φ15-φ29 | Hoop | 4 | | | | | |

# 空调系统

Air Conditioner System

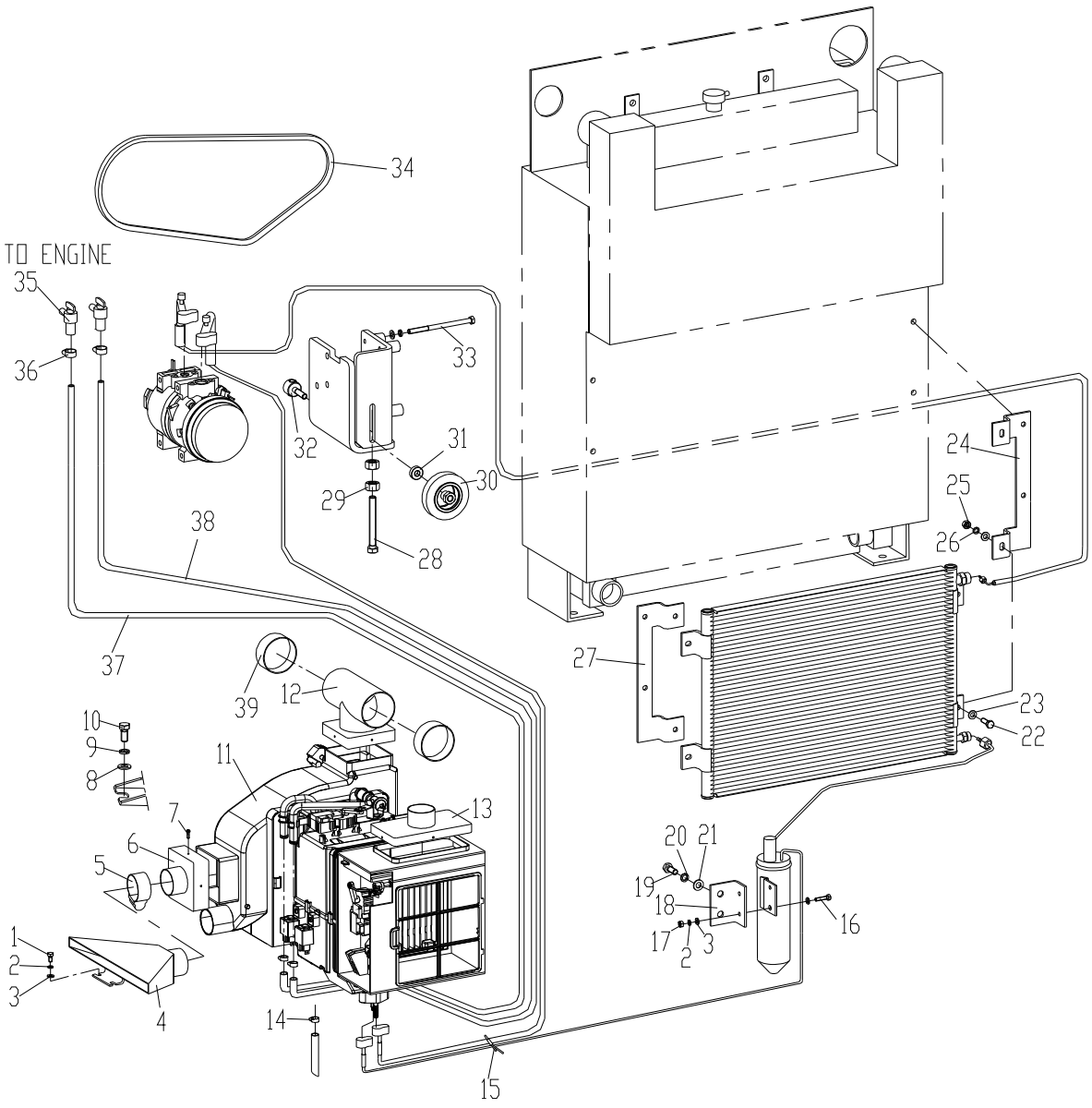

空调系统 Air Conditioner System

| 序号 ITEM | 零件代号 Part No | 零件名 | PART NAME | 数量 Q'TY | 服务代码 S.C | 适用机号 SERIAL NO | 互换性 IA | 替换零件 REPLACEABLE PART | |
|---|---|---|---|---|---|---|---|---|---|
| | | | | | | | | 零件代号 Part No | 数量 Q'TY |
| 37 | 801905544 | 输水胶管 I φ14 L=2600 | Hose | 1 | | | | | |
| 38 | 801905573 | 输水胶管 II φ14 L=3350 | Hose | 1 | | | | | |
| 39 | 801905495 | 软管卡箍 φ51-φ76 | Hoop | 2 | | | | | |

# 空调系统
# Air Conditioner System

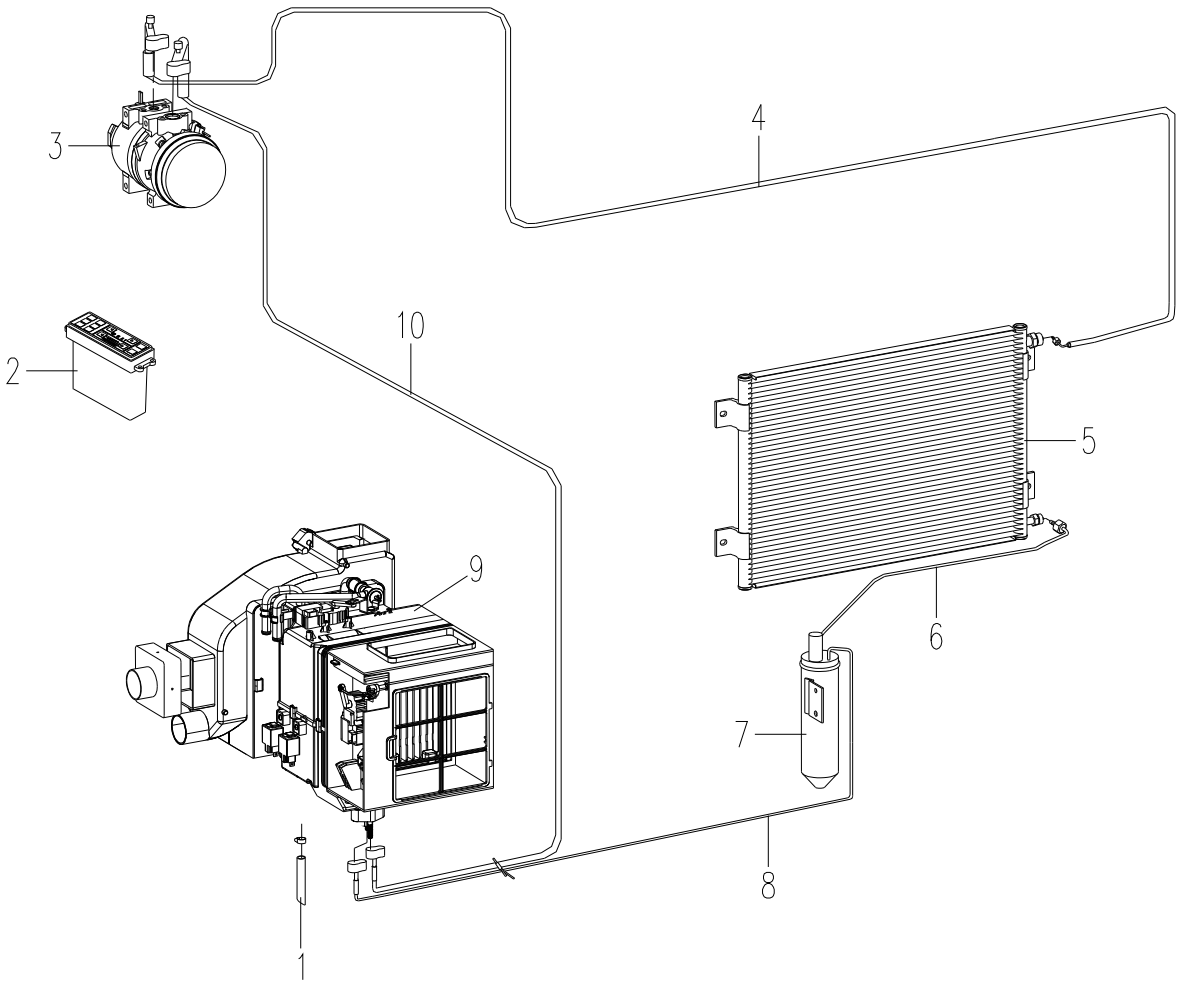

空调系统 Air Conditioner System

| 序号 ITEM | 零件代号 Part No | 零件名 | PART NAME | 数量 Q'TY | 服务代码 S.C | 适用机号 SERIAL NO | 互换性 IA | 替换零件 REPLACEABLE PART | |
|---|---|---|---|---|---|---|---|---|---|
| | | | | | | | | 零件代号 Part No | 数量 Q'TY |
| 1 | 859934546 | 排水软管 | Hose | 1 | | | | | |
| 2 | 803504622 | 控制面板总成 | Unit Air-Condition | 1 | | | | | |
| 3 | 819909396 | 压缩机总成 | Compressor | 1 | | | | | |
| 4 | 803506302 | 高压软管 | Hose | 1 | | | | | |
| 5 | 803504679 | 冷凝器总成 | Condenser | 1 | | | | | |
| 6 | 803506303 | 液体软管(A) | Hose | 1 | | | | | |
| 7 | 803504813 | 储液罐总成 | Liquid Tank | 1 | | | | | |
| 8 | 803506304 | 液体软管(B) | Hose | 1 | | | | | |
| 9 | 803504680 | 蒸发器总成 | Evaporator | 1 | | | | | |
| 10 | 803506305 | 低压软管 | Hose | 1 | | | | | |
| 9.1 | 803704430 | 除霜、吹脚执行器 | Deforst、blowing the foot actuator | 1 | | | | | |
| 9.2 | 803704431 | 上出风执行器 | Actuator on the wind | 1 | | | | | |
| 9.3 | 803177687 | 加热器芯体(水箱) | Heater core | 1 | | | | | |
| 9.4 | 803704434 | 暖水阀 | Warm water valve | 1 | | | | | |
| 9.5 | 803504601 | 蒸发器芯体 | Evaporator | 1 | | | | | |
| 9.6 | 803704435 | 新风滤网 | New air filter | 1 | | | | | |
| 9.7 | 803704433 | 调速电阻 | Speed resistance | 1 | | | | | |
| 9.8 | 803608681 | 继电器 | Relay | 2 | | | | | |
| 9.9 | 803704428 | 进风单元执行器 | Inlet actuator unit | 1 | | | | | |
| 9.10 | 803704427 | 膨胀阀 | Expansion valve | 1 | | | | | |
| 9.11 | 803504600 | 感温头 | Temperature head | 1 | | | | | |
| 9.12 | 803704429 | 热水阀执行器 | Hot water valve actuator | 1 | | | | | |
| 9.13 | 803704432 | 风机总成 | Fan assembly | 1 | | | | | |

# 底盘总成

Undercarriage Assy

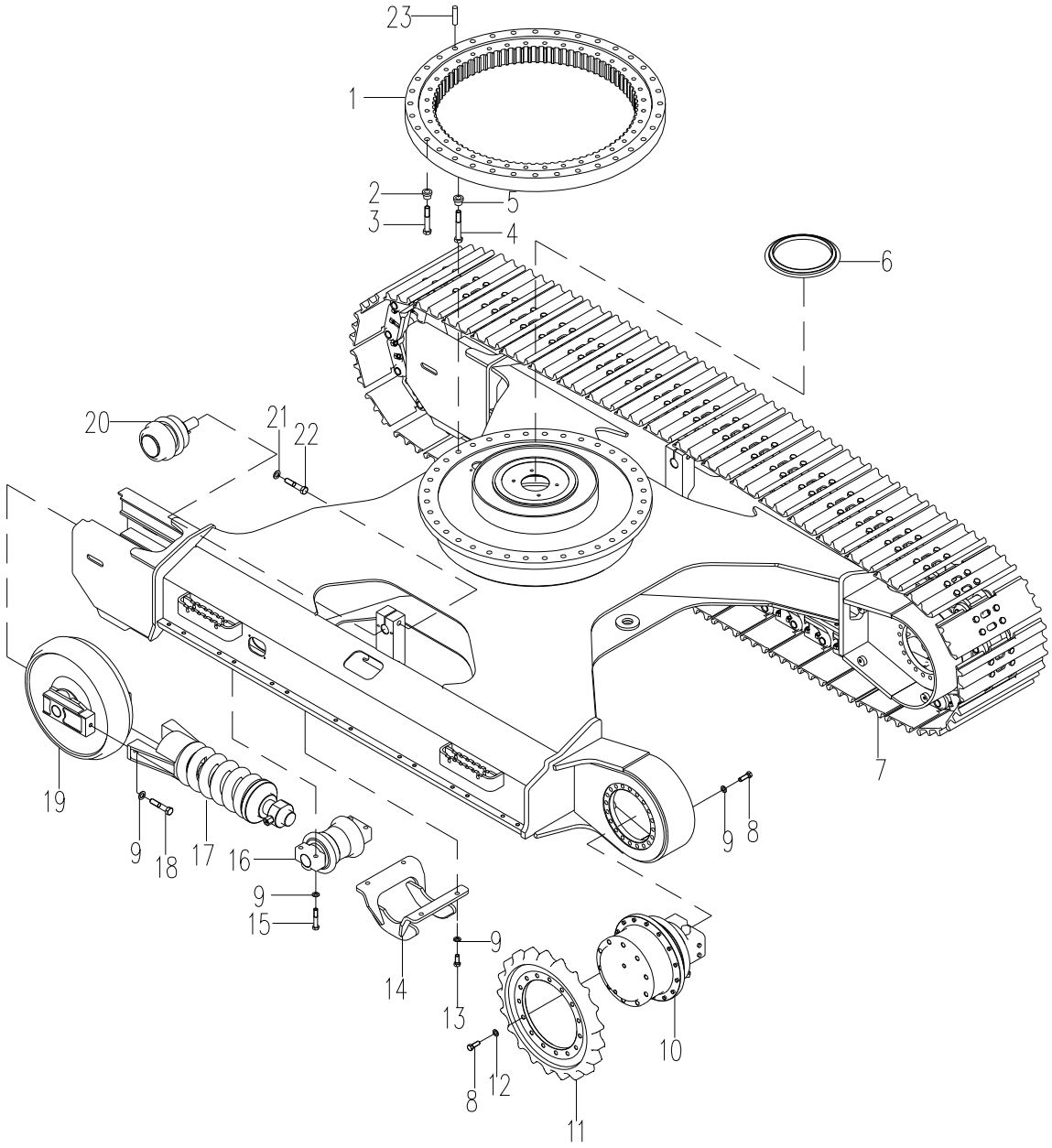

## 底盘总成 Undercarriage Assy

| 序号 ITEM | 零件代号 Part No | 零件名 | PART NAME | 数量 Q'TY | 服务代码 S.C | 适用机号 SERIAL NO | 互换性 IA | 替换零件 REPLACEABLE PART | |
|---|---|---|---|---|---|---|---|---|---|
| | | | | | | | | 零件代号 Part No | 数量 Q'TY |
| 1 | 800513365 | 回转支承 | Swing Bearing Parts | 1 | | | | | |
| 2 | 310500225 | 垫块 | Heel Block | 36 | | | | | |
| 3 | 805001953 | 螺栓 M20×120(10.9) | Bolt | 36 | | | | | |
| 4 | 805001954 | 螺栓 M20×130(10.9) | Bolt | 36 | | | | | |
| 5 | 310500226 | 垫块 | Heel Block | 36 | | | | | |
| 6 | 310500054 | 防尘圈 | Dirt-proof Boot | 1 | | | | | |
| 7 | 800305452 | 履带总成 | Crawler | 2 | | | | | |
| 8 | 805000607 | 螺栓 M16×50(10.9) | Bolt | 70 | | | | | |
| 9 | 805302498 | 垫圈 16(300HV) | Washer | 108 | | | | | |
| 10 | 803007272 | 行走马达 | Travel Motor | 2 | | | | | |
| 11 | 800305446 | 驱动轮 | Sprocket | 2 | | | | | |
| 12 | 805302502 | 垫圈 16 | Washer | 30 | | | | | |
| 13 | 805000660 | 螺栓 M16×40(10.9) | Bolt | 8 | | | | | |
| 14 | 310500051 | 夹轨器 | Guard | 2 | | | | | |
| 15 | 805000579 | 螺栓 M16×90(10.9) | Bolt | 56 | | | | | |
| 16 | 800305442 | 支重轮 | Lower Roller | 14 | | | | | |
| 17 | 800305445 | 涨紧装置 | Adjuster Assy | 2 | | | | | |
| 18 | 805000612 | 螺栓 M16×45(10.9) | Bolt | 4 | | | | | |
| 19 | 800305444 | 引导轮 | Guide Wheel | 2 | | | | | |
| 20 | 800305443 | 托轮 | Upper Roller | 2 | | | | | |
| 21 | 819908685 | 垫圈 20(300HV) | Washer | 2 | | | | | |
| 22 | 805001977 | 螺栓 M20×100(10.9) | Bolt | 2 | | | | | |
| 23 | 805603537 | 销 18×40 | Pin | 1 | | | | | |

# 底盘总成

# Undercarriage Assy

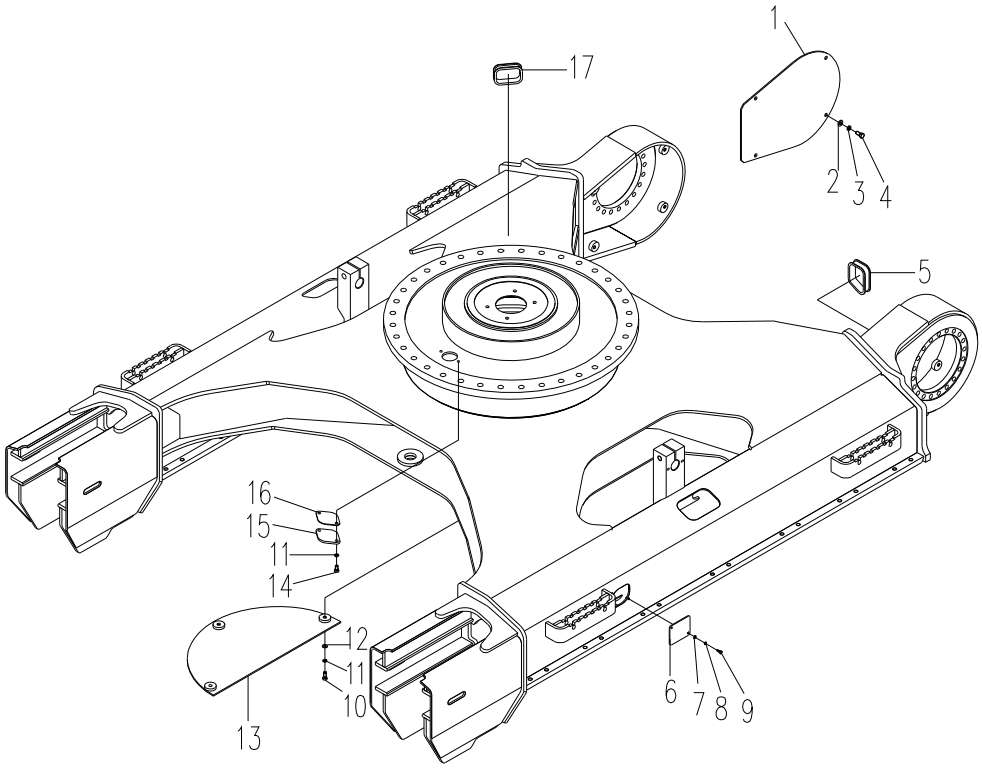

底盘总成 Undercarriage Assy

| 序号 ITEM | 零件代号 Part No | 零件名 | PART NAME | 数量 Q'TY | 服务代码 S.C | 适用机号 SERIAL NO | 互换性 IA | 替换零件 REPLACEABLE PART | |
|---|---|---|---|---|---|---|---|---|---|
| | | | | | | | | 零件代号 Part No | 数量 Q'TY |
| 1 | 310500059 | 马达盖板 | Cover | 2 | | | | | |
| 2 | 805300020 | 垫圈 12 | Washer | 8 | | | | | |
| 3 | 805300018 | 垫圈 12 | Washer | 8 | | | | | |
| 4 | 805000715 | 螺栓 M12×25 | Bolt | 8 | | | | | |
| 5 | 310500058 | 软管护套 | Hose | 2 | | | | | |
| 6 | 310500053 | 侧盖板 | Cover | 2 | | | | | |
| 7 | 805300029 | 垫圈 6 | Washer | 4 | | | | | |
| 8 | 805300030 | 垫圈 6 | Washer | 4 | | | | | |
| 9 | 805000322 | 螺栓 M6×16 | Bolt | 4 | | | | | |
| 10 | 805000727 | 螺栓 M10×25 | Bolt | 6 | | | | | |
| 11 | 805300014 | 垫圈 10 | Washer | 8 | | | | | |
| 12 | 805300017 | 垫圈 10 | Washer | 6 | | | | | |
| 13 | 310500052 | 底盖 | Cover | 2 | | | | | |
| 14 | 805000714 | 螺栓 M10×20 | Bolt | 2 | | | | | |
| 15 | 310500056 | 油池盖板 | Cover | 1 | | | | | |
| 16 | 310500057 | 密封垫 | Rubber Washing | 1 | | | | | |
| 17 | 310500055 | 软管护套 | Hose | 2 | | | | | |

# 履带

Track Chain

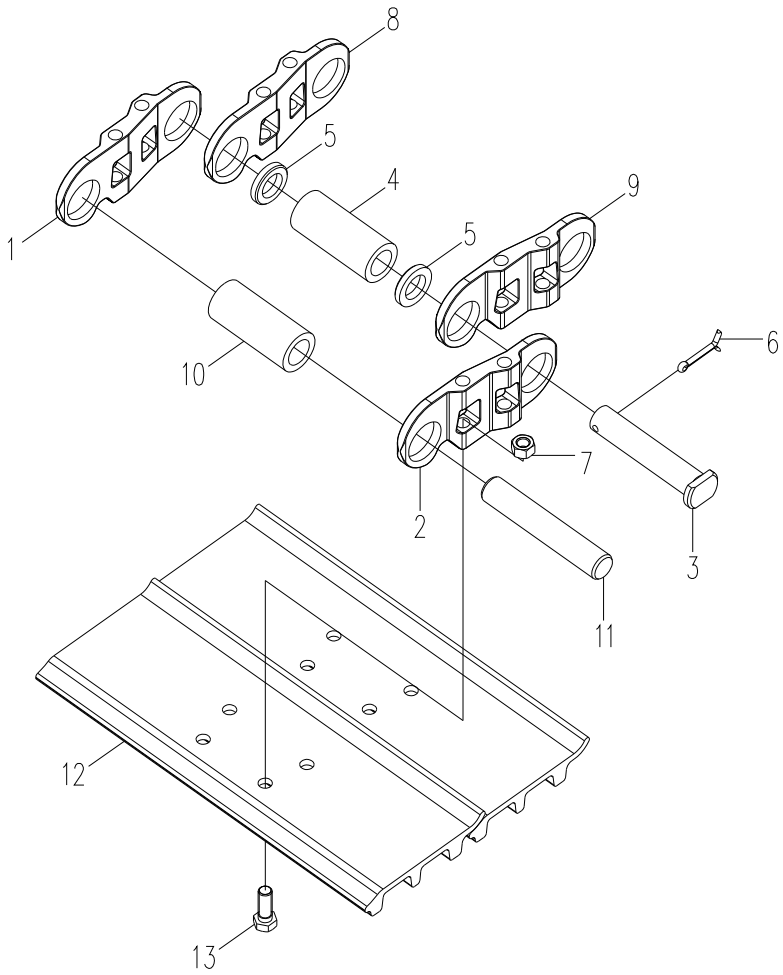

履带 Track Chain

| 序号 ITEM | 零件代号 Part No | 零件名 | PART NAME | 数量 Q'TY | 服务代码 S.C | 适用机号 SERIAL NO | 互换性 IA | 替换零件 REPLACEABLE PART | |
|---|---|---|---|---|---|---|---|---|---|
| | | | | | | | | 零件代号 Part No | 数量 Q'TY |
| 1 | 800306620 | 左主链轨节 | Master Link LH | 2 | | | | | |
| 2 | 800306619 | 右主链轨节 | Master Link RH | 2 | | | | | |
| 3 | 800305471 | 主销轴 | Master Track Pin | 2 | | | | | |
| 4 | 800306622 | 主销套 | Master Bushing | 2 | | | | | |
| 5 | 800306623 | 主密封圈 | Master Spacer | 4 | | | | | |
| 6 | 800306626 | 开口销 | Cotter Pin | 2 | | | | | |
| 7 | 800305474 | 螺母 | Track Nut | 360 | | | | | |
| 8 | 800306625 | 左链轨节 | Track Link LH | 88 | | | | | |
| 9 | 800306624 | 右链轨节 | Track Link RH | 88 | | | | | |
| 10 | 800306621 | 销套 | Bushing | 88 | | | | | |
| 11 | 800305470 | 销轴 | Track Pin | 88 | | | | | |
| 12 | 800305473 | 履带板 | Track Shoe | 90 | | | | | |
| 13 | 800305472 | 螺栓 | Track Bolt | 360 | | | | | |

# 涨紧机构

Adjuster

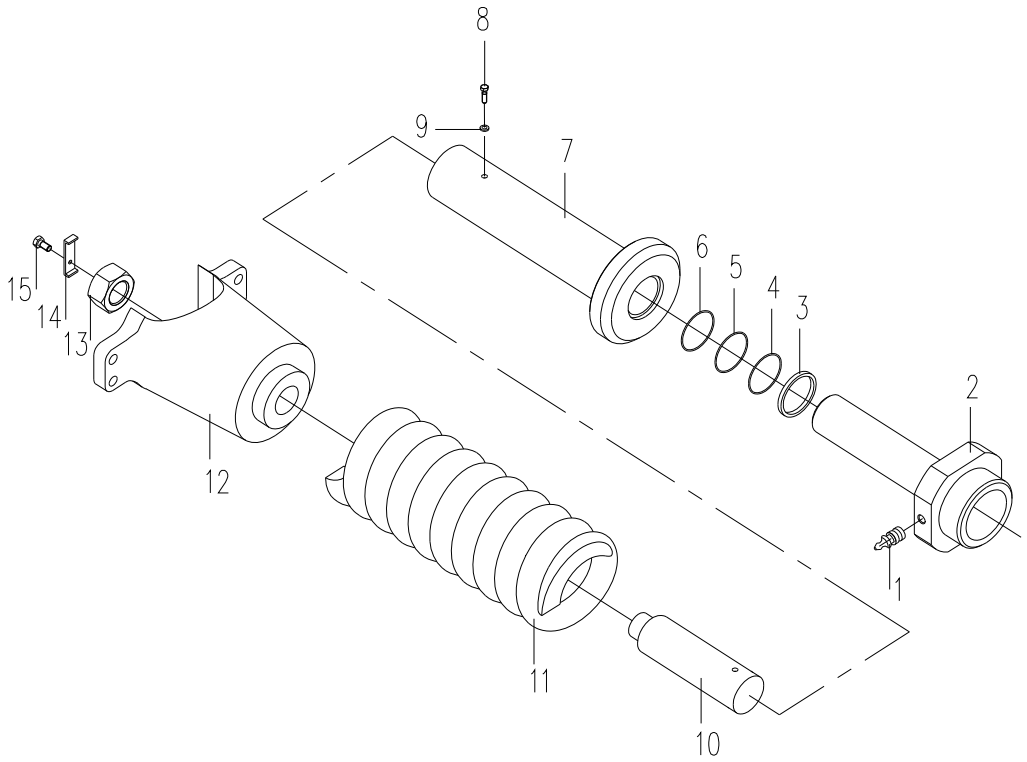

涨紧机构 Adjuster

| 序号 ITEM | 零件代号 Part No | 零件名 | PART NAME | 数量 Q'TY | 服务代码 S.C | 适用机号 SERIAL NO | 互换性 IA | 替换零件 REPLACEABLE PART | |
|---|---|---|---|---|---|---|---|---|---|
| | | | | | | | | 零件代号 Part No | 数量 Q'TY |
| 1 | 800340553 | 注油阀 | Valve-Grease | 1 | | | | | |
| 2 | 800340548 | 轴 | Slaft | 1 | | | | | |
| 3 | 800340552 | 弹性挡圈 | Ring | 1 | | | | | |
| 4 | 800340551 | 防尘圈 | Seal-Dust | 1 | | | | | |
| 5 | 800340550 | 保护圈 | Ring | 1 | | | | | |
| 6 | 800340549 | O型圈 | O-Ring | 1 | | | | | |
| 7 | 800340547 | 油缸体 | Cylinder | 1 | | | | | |
| 8 | 800340546 | 紧定螺钉 | Screw | 1 | | | | | |
| 9 | 800340554 | 弹簧垫圈 | Ring | 1 | | | | | |
| 10 | 800340544 | 推杆 | Rod | 1 | | | | | |
| 11 | 800340545 | 弹簧 | Spring | 1 | | | | | |
| 12 | 800340540 | 支架 | Yoke | 1 | | | | | |
| 13 | 800340543 | 螺母 | Nut | 1 | | | | | |
| 14 | 800340542 | 锁板 | Plate | 1 | | | | | |
| 15 | 800340541 | 螺栓 | Bolt | 2 | | | | | |

# 下车液压管路

Base Hydraulic Piping

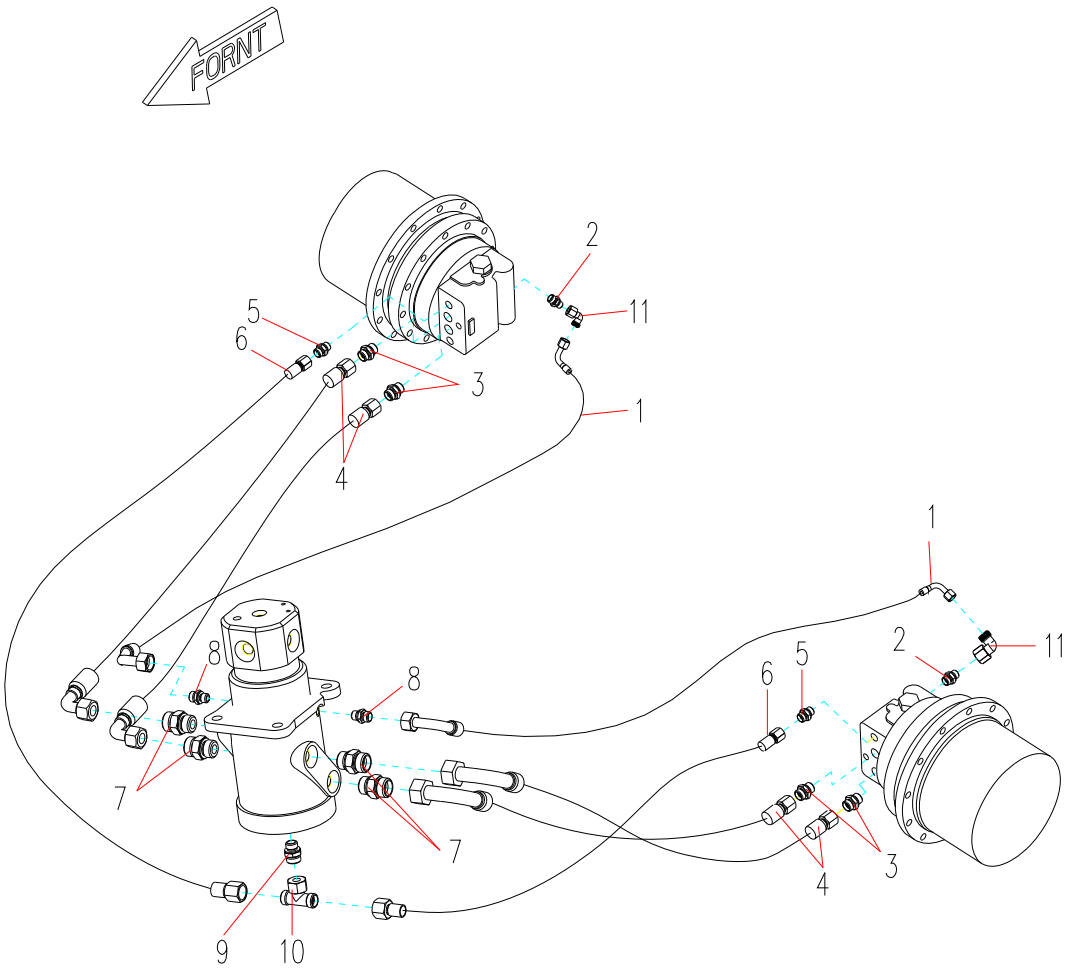

## 下车液压管路 Base Hydraulic Piping

| 序号 ITEM | 零件代号 Part No | 零件名 | PART NAME | 数量 Q'TY | 服务代码 S.C | 适用机号 SERIAL NO | 互换性 IA | 替换零件 REPLACEABLE PART | |
|---|---|---|---|---|---|---|---|---|---|
| | | | | | | | | 零件代号 Part No | 数量 Q'TY |
| 1 | 819908830 | 软管总成 | Hose Assy | 2 | | | | | |
| 2 | 803172161 | 接头 | Adapter | 2 | | | | | |
| 3 | 803172299 | 接头 | Adapter | 2 | | | | | |
| 4 | 803173217 | 软管总成 | Hose Assy | 4 | | | | | |
| 5 | 803172173 | 接头 | Adapter | 2 | | | | | |
| 6 | 803172596 | 软管总成 | Hose Assy | 2 | | | | | |
| 7 | 803163585 | 接头 | Adapter | 4 | | | | | |
| 8 | 803163582 | 接头 | Adapter | 2 | | | | | |
| 9 | 803166500 | 接头 | Adapter | 1 | | | | | |
| 10 | 803166562 | 接头 | Adapter | 1 | | | | | |
| 11 | 803166487 | 接头 | Adapter | 2 | | | | | |

# 中心回转体

Turning Joint

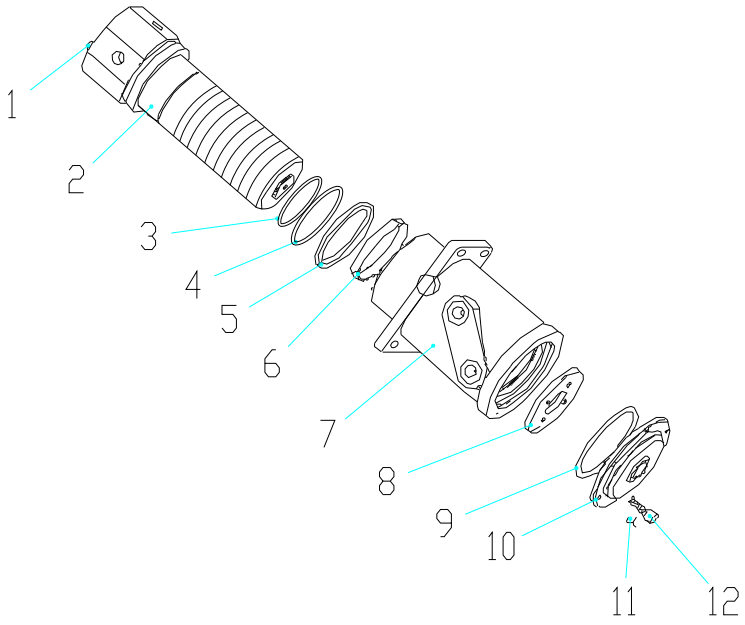

中心回转体 Turning Joint

| 序号 ITEM | 零件代号 Part No | 零件名 | PART NAME | 数量 Q'TY | 服务代码 S.C | 适用机号 SERIAL NO | 互换性 IA | 替换零件 REPLACEABLE PART | |
|---|---|---|---|---|---|---|---|---|---|
| | | | | | | | | 零件代号 Part No | 数量 Q'TY |
| 1 | 860120758 | 堵头 | Casing | 4 | | | | | |
| 2 | 860120759 | 回转轴 | Turning Shaft | 1 | | | | | |
| 3 | 860120765 | O 型圈 | O-Ring | 1 | | | | | |
| 4 | 860120764 | 防尘圈 | Dust Ring | 1 | | | | | |
| 5 | 860120766 | 旋转密封 | Turning Seal | 6 | | | | | |
| 6 | 860120763 | 支承环 | Back Up Ring | 1 | | | | | |
| 7 | 860120760 | 回转体 | Turning Joint | 1 | | | | | |
| 8 | 860120761 | 定位盖 | Guide Plate | 1 | | | | | |
| 9 | 860120767 | O 型圈 | O-Ring | 1 | | | | | |
| 10 | 860120762 | 端盖 | Cover | 1 | | | | | |
| 11 | 860120769 | 弹垫 | Washer-Spring | 10 | | | | | |
| 12 | 860120768 | 外六角螺钉 | Screw | 10 | | | | | |

# 工作装置

Worker

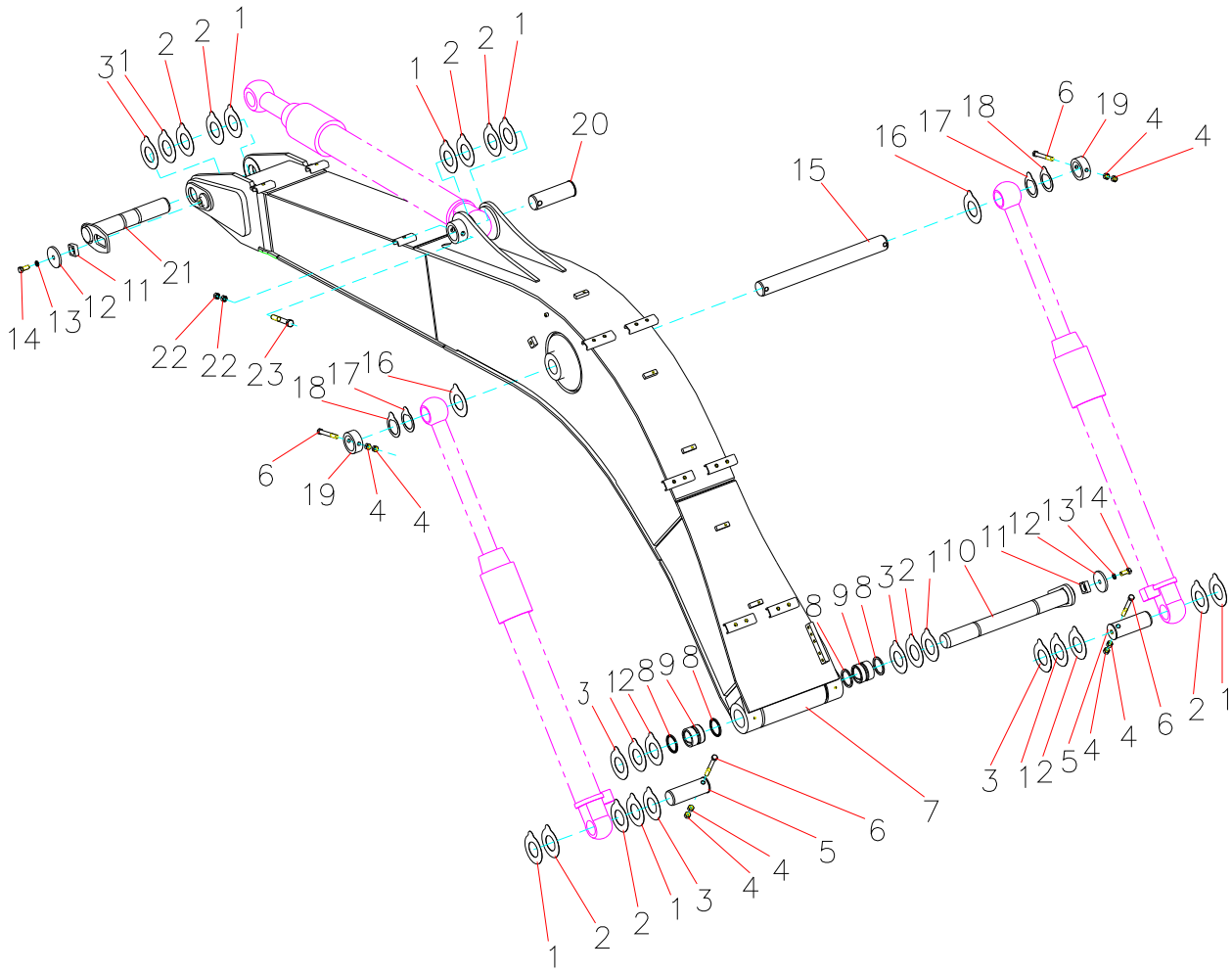
31 2 2 1
1 2 2 1
20
15
16 17 18 6 19 4 4
14 13 12 11 21
22 22 23 18 17 16
6 19 4 4
3 12 8 9 8
8 9 8 3 2 1 10 11 12 13 14
3 12 5 4 4 6 2 1
1 2 2 1 3 4 4 5 6 7

## 工作装置 Worker

| 序号 ITEM | 零件代号 Part No | 零件名 | PART NAME | 数量 Q'TY | 服务代码 S.C | 适用机号 SERIAL NO | 互换性 IA | 替换零件 REPLACEABLE PART | |
|---|---|---|---|---|---|---|---|---|---|
| | | | | | | | | 零件代号 Part No | 数量 Q'TY |
| 1 | 819910695 | 调整垫 | Adjust Washer | 10 | | | | | |
| 2 | 819910696 | 调整垫 | Adjust Washer | 10 | | | | | |
| 3 | 819910619 | 调整垫 | Adjust Washer | 5 | | | | | |
| 4 | 805200051 | 螺母 M16 | Nut | 8 | | | | | |
| 5 | 310500087 | 轴 | Shaft | 2 | | | | | |
| 6 | 805001949 | 螺栓 M16×140 | Bolt | 4 | | | | | |
| 7 | 310500066 | 动臂 | Boom | 1 | | | | | |
| 8 | 803172505 | 防尘圈 | Seal | 4 | | | | | |
| 9 | 310501237 | 轴承 | Bushing | 2 | | | | | |
| 10 | 310500068 | 轴 | Shaft | 1 | | | | | |
| 11 | 310500093 | 滑动套 | Bushing | 2 | | | | | |
| 12 | 310500092 | 压板 | Plate | 2 | | | | | |
| 13 | 805302523 | 垫圈 18 | Washer | 2 | | | | | |
| 14 | 805004706 | 螺栓 M18×40 | Bolt | 2 | | | | | |
| 15 | 310500086 | 轴 | Shaft | 1 | | | | | |
| 16 | 819910627 | 调整垫 | Adjust Washer | 2 | | | | | |
| 17 | 819910628 | 调整垫 | Adjust Washer | 2 | | | | | |
| 18 | 819910620 | 调整垫 | Adjust Washer | 2 | | | | | |
| 19 | 310500081 | 止动套 | Washer | 2 | | | | | |
| 20 | 310500078 | 轴 | Shaft | 1 | | | | | |
| 21 | 310500067 | 轴 | Shaft | 1 | | | | | |
| 22 | 805200052 | 螺母 M20 | Nut | 2 | | | | | |
| 23 | 805004684 | 螺栓 M20×140 | Bolt | 1 | | | | | |

## 工作装置

Worker

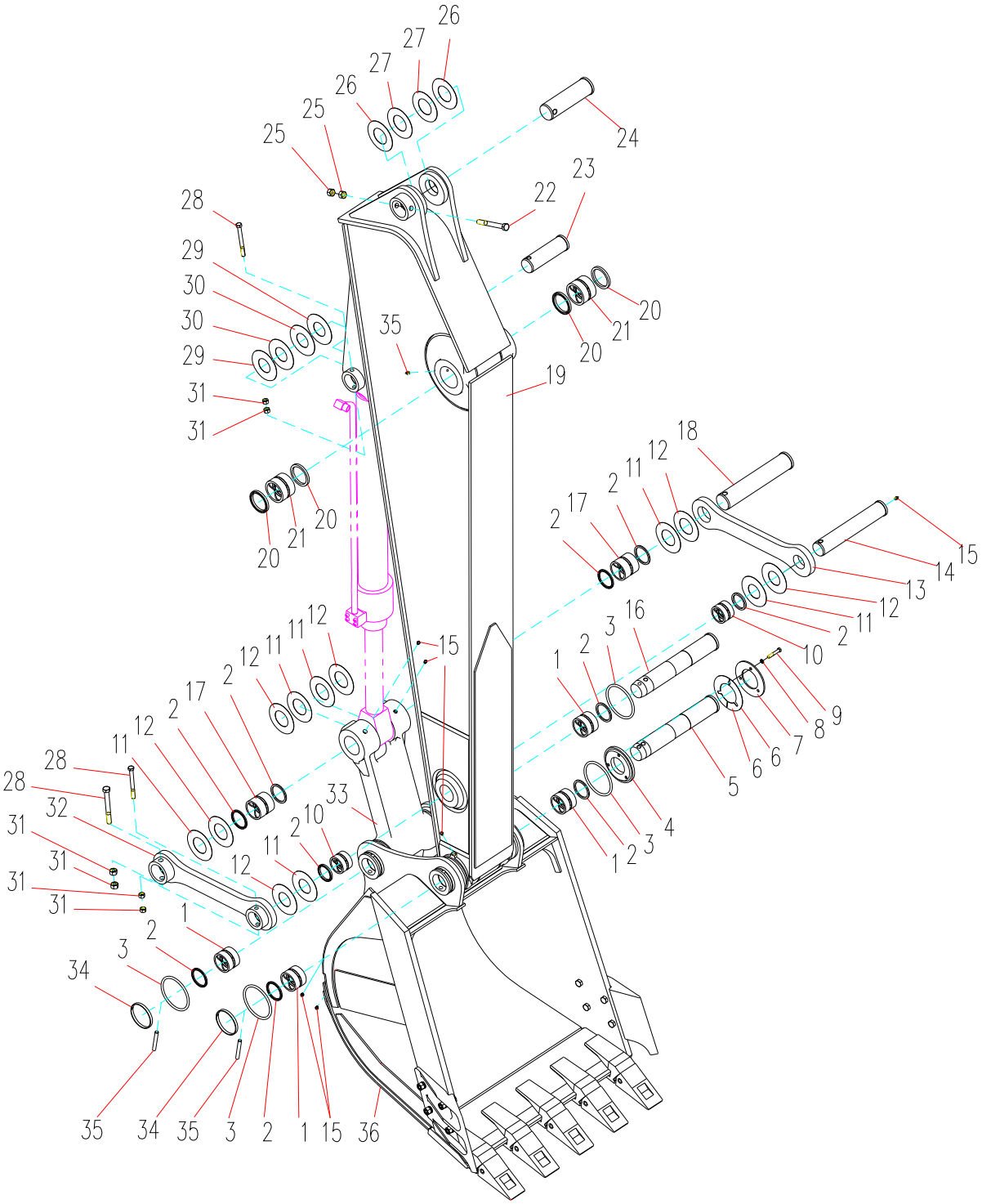
26
27
27
26
25
25
24
23
22
28
29
30
30
29
31
31
35
20
21
20
19
18
12
11
2
17
2
15
14
13
12
11
2
10
16
3
2
1
9
8
7
6
6
5
4
3
2
1
12
11
11
12
2
17
2
12
11
28
28
32
31
31
31
31
33
10
2
11
12
1
2
3
34
35
34
35
3
2
1
15
36

工作装置 Worker

| 序号 ITEM | 零件代号 Part No | 零件名 | PART NAME | 数量 Q'TY | 服务代码 S.C | 适用机号 SERIAL NO | 互换性 IA | 替换零件 REPLACEABLE PART | |
|---|---|---|---|---|---|---|---|---|---|
| | | | | | | | | 零件代号 Part No | 数量 Q'TY |
| 1 | 310500096 | 轴承 | Bushing | 4 | | | | | |
| 2 | 803172504 | 防尘圈 | Seal | 10 | | | | | |
| 3 | 819908911 | O 形圈 112×7.0G | Pin | 4 | | | | | |
| 4 | 310500089 | 摩擦板 | Friction Plate | 1 | | | | | |
| 5 | 310500070 | 轴 | Shaft | 1 | | | | | |
| 6 | 310500094 | 垫板 | Plate | 12 | | | | | |
| 7 | 310500088 | 夹板 | Plate | 1 | | | | | |
| 8 | 805300018 | 垫圈 12 | Washer | 3 | | | | | |
| 9 | 805000489 | 螺栓 M12×75 | Bolt | 3 | | | | | |
| 10 | 310500072 | 轴承 | Bushing | 2 | | | | | |
| 11 | 809910621 | 调整垫 | Adjust Washer | 6 | | | | | |
| 12 | 819910622 | 调整垫 | Adjust Washer | 6 | | | | | |
| 13 | 310500090 | 摇杆板 | Rocker Plate | 1 | | | | | |
| 14 | 310500071 | 轴 | Shaft | 1 | | | | | |
| 15 | 801100336 | 油杯 M10×1 | Grease Cup | 9 | | | | | |
| 16 | 310500095 | 轴 | Shaft | 1 | | | | | |
| 17 | 310500098 | 轴承 | Bushing | 2 | | | | | |
| 18 | 310500097 | 轴 | Shaft | 1 | | | | | |
| 19 | 310500064 | 斗杆 | Arm | 1 | | | | | |
| 20 | 803172505 | 防尘圈 | Seal | 4 | | | | | |
| 21 | 310501237 | 轴承 | Bushing | 2 | | | | | |
| 22 | 805004684 | 螺栓 M20×140 | Bolt | 1 | | | | | |
| 23 | 310500075 | 轴 | Shaft | 1 | | | | | |
| 24 | 310500078 | 轴 | Shaft | 1 | | | | | |
| 25 | 805200052 | 螺母 M20 | Nut | 2 | | | | | |
| 26 | 819910695 | 调整垫 | Adjust Washer | 2 | | | | | |
| 27 | 819910696 | 调整垫 | Adjust Washer | 2 | | | | | |
| 28 | 805000053 | 螺栓 M16×120 | Seal | 3 | | | | | |
| 29 | 819910623 | 调整垫 | Adjust Washer | 2 | | | | | |
| 30 | 819910624 | 调整垫 | Adjust Washer | 2 | | | | | |
| 31 | 805200051 | 螺母 M16 | Nut | 6 | | | | | |
| 32 | 310500063 | 摇杆组件 | Rocker components | 1 | | | | | |
| 33 | 310500069 | 单连杆 | Link Lever | 1 | | | | | |
| 34 | 310500080 | 弹性圈 | Elastic Ring | 2 | | | | | |
| 35 | 310500091 | 销 | Pin | 2 | | | | | |
| 36 | 310500061 | 铲斗总成 | Bucket | 1 | | | | | |

# 工作装置

Worker

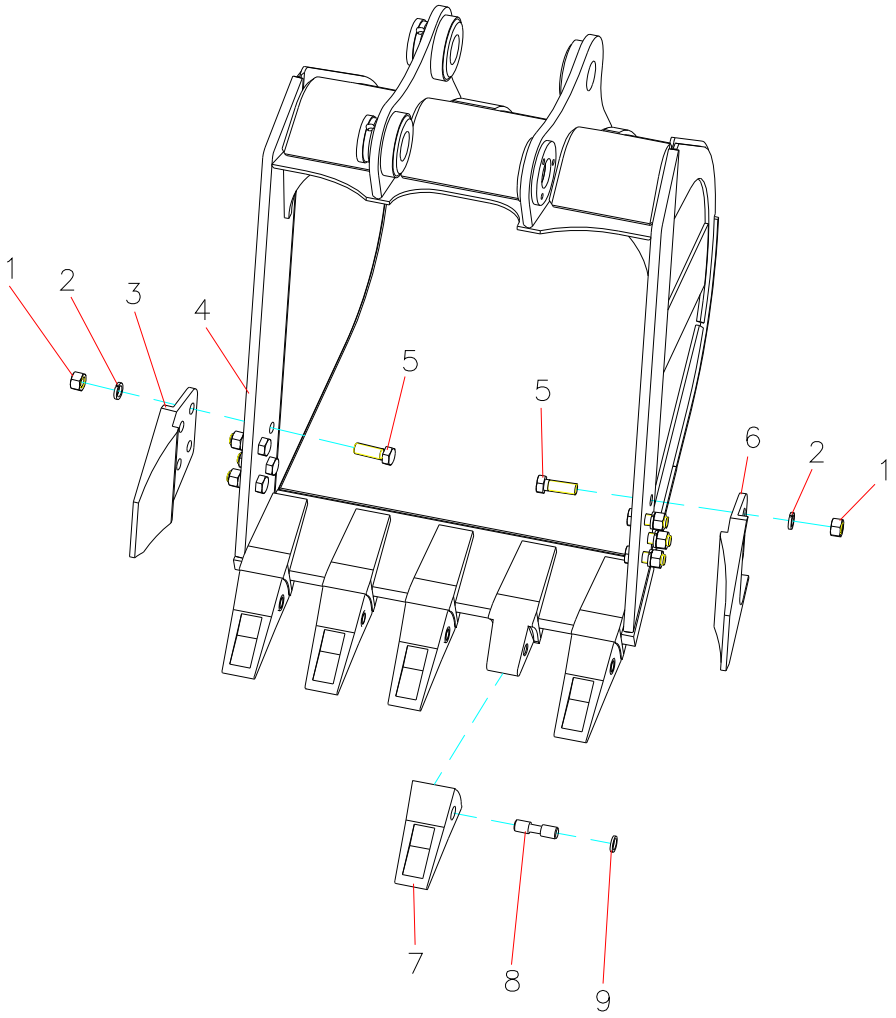

工作装置 Worker

| 序号 ITEM | 零件代号 Part No | 零件名 | PART NAME | 数量 Q'TY | 服务代码 S.C | 适用机号 SERIAL NO | 互换性 IA | 替换零件 REPLACEABLE PART | |
|---|---|---|---|---|---|---|---|---|---|
| | | | | | | | | 零件代号 Part No | 数量 Q'TY |
| 1 | 805200300 | 螺母 M24 | Nut | 8 | | | | | |
| 2 | 805300034 | 垫圈 24 | Washer | 8 | | | | | |
| 3 | 819908898 | 右侧刃 | Side Cutter | 1 | | | | | |
| 4 | 310500062 | 铲斗焊接件 | Bucket | 1 | | | | | |
| 5 | 805000568 | 螺栓 M24X70 | Bolt | 8 | | | | | |
| 6 | 819908897 | 左侧刃 | Side Cutter | 1 | | | | | |
| 7 | 819908895 | 齿套 | Tooth Point | 5 | | | | | |
| 8 | 819908899 | 销 | Pin | 5 | | | | | |
| 9 | 819908920 | 卡簧 | Clamp Spring | 5 | | | | | |

# 集中润滑

Grease Piping

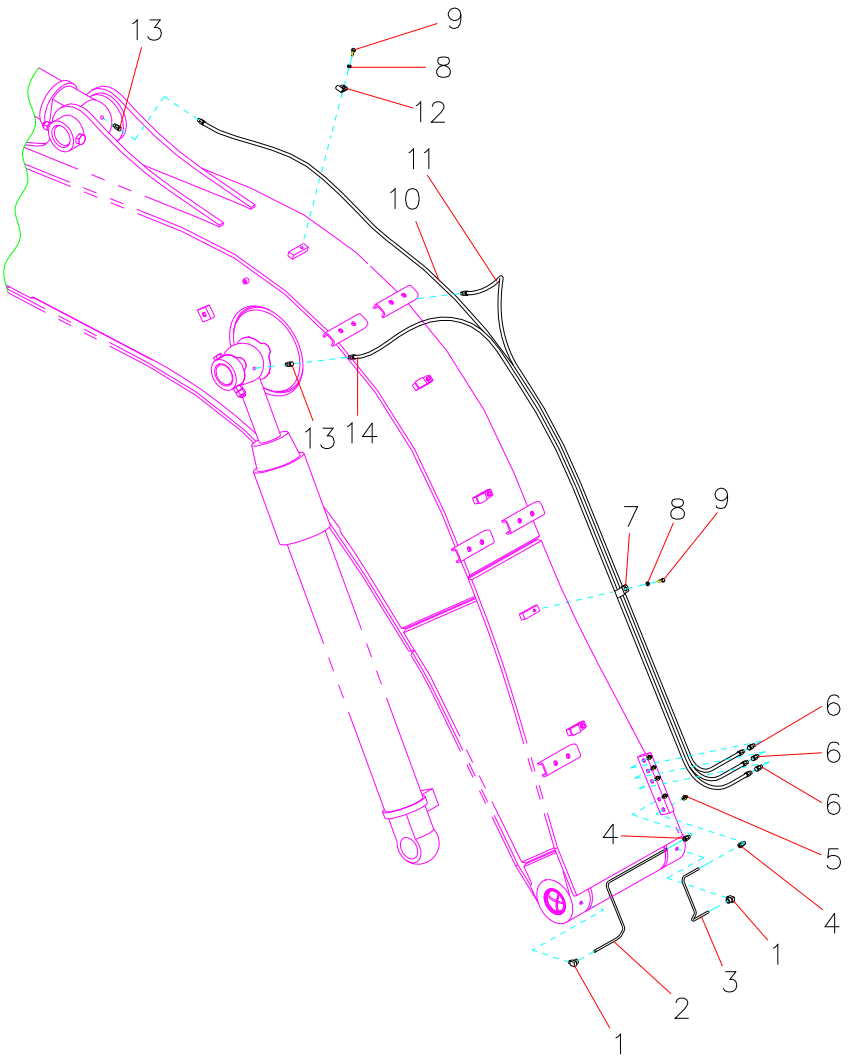

集中润滑 Grease Piping

| 序号 ITEM | 零件代号 Part No | 零件名 | PART NAME | 数量 Q'TY | 服务代码 S.C | 适用机号 SERIAL NO | 互换性 IA | 替换零件 REPLACEABLE PART | |
|---|---|---|---|---|---|---|---|---|---|
| | | | | | | | | 零件代号 Part No | 数量 Q'TY |
| 1 | 803172499 | 弯管接头 | Adapter Body | 2 | | | | | |
| 2 | 310500419 | 润滑管 | Pipe | 1 | | | | | |
| 3 | 310500420 | 润滑管 | Pipe | 1 | | | | | |
| 4 | 803166493 | 接头 | Adapter Body | 2 | | | | | |
| 5 | 801100336 | 油杯 M10X1 | Grease Cup | 5 | | | | | |
| 6 | 803166493 | 接头体 | Adapter Body | 3 | | | | | |
| 7 | 310600621 | 管夹Ⅰ | Nozzle Block | 4 | | | | | |
| 8 | 805300030 | 垫圈 6 | Washer | 5 | | | | | |
| 9 | 805004782 | 螺栓 M6X18 | Bolt | 5 | | | | | |
| 10 | 803176567 | 软管 | Tube | 1 | | | | | |
| 11 | 803176568 | 软管 | Tube | 1 | | | | | |
| 12 | 310600622 | 管夹Ⅱ | Nozzle Block | 1 | | | | | |
| 13 | 803172508 | 接头体 | Adapter Body | 3 | | | | | |
| 14 | 803176566 | 软管 | Tube | 1 | | | | | |

# 工作装置管路

Front Piping

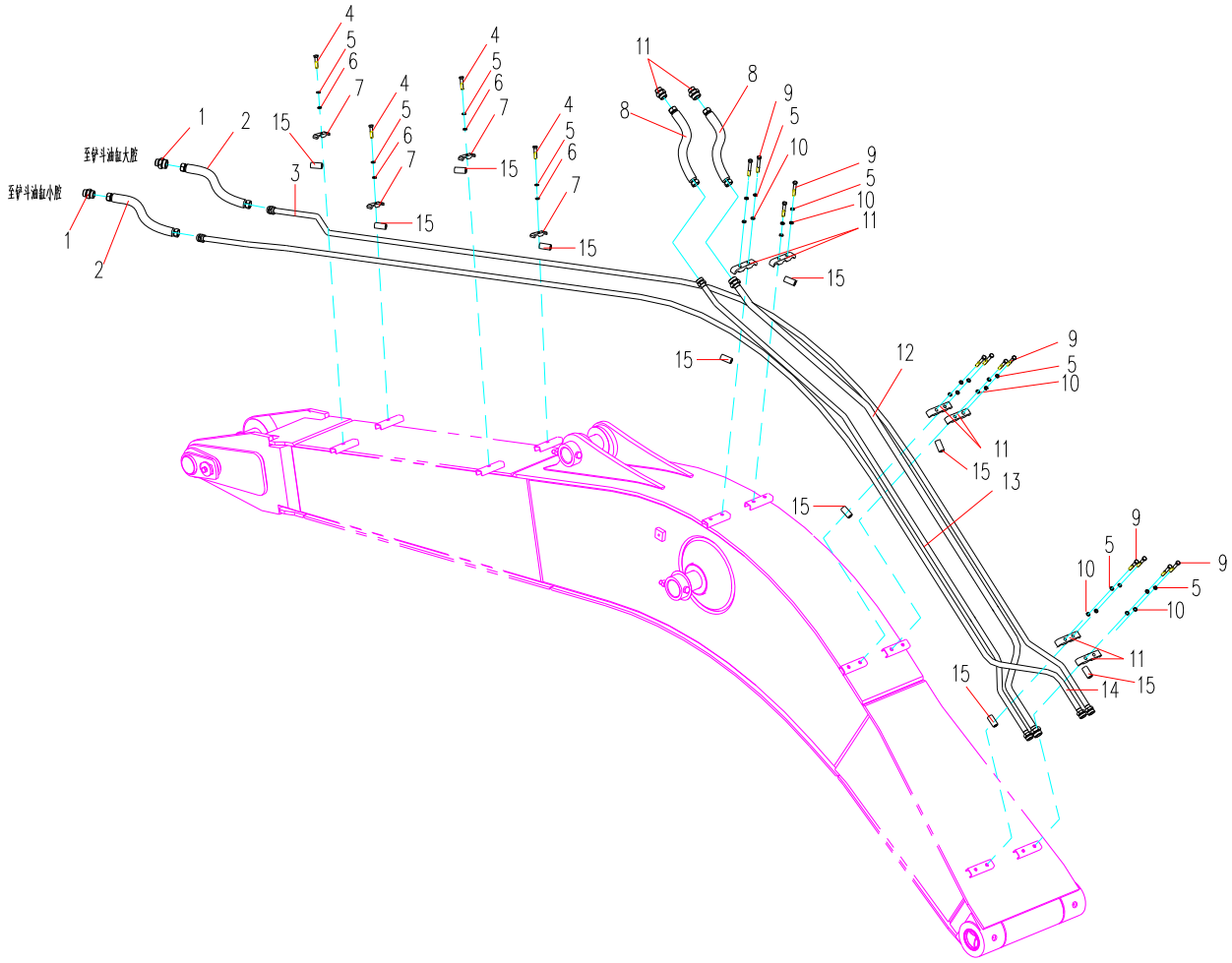

工作装置管路 Front Piping

| 序号 ITEM | 零件代号 Part No | 零件名 | PART NAME | 数量 Q'TY | 服务代码 S.C | 适用机号 SERIAL NO | 互换性 IA | 替换零件 REPLACEABLE PART | |
|---|---|---|---|---|---|---|---|---|---|
| | | | | | | | | 零件代号 Part No | 数量 Q'TY |
| 1 | 803172510 | 接头 | Adapter | 4 | | | | | |
| 2 | 803172606 | 软管总成 | Hose Assy | 2 | | | | | |
| 3 | 310500006 | 钢管总成 III | Pipe III | 1 | | | | | |
| 4 | 805103583 | 螺栓 | Bolt | 4 | | | | | |
| 5 | 805300018 | 垫圈 | Washer | 16 | | | | | |
| 6 | 805302496 | 垫圈 | Washer | 4 | | | | | |
| 7 | 310500327 | 管夹 | Pipe Clip | 4 | | | | | |
| 8 | 803172605 | 软管总成 | Hose Assy | 2 | | | | | |
| 9 | 805103583 | 螺栓 | Bolt | 12 | | | | | |
| 10 | 805300020 | 垫圈 | Washer | 12 | | | | | |
| 11 | 310500355 | 管夹 | Pipe Clip | 6 | | | | | |
| 12 | 310500325 | 钢管总成 I | Pipe I | 1 | | | | | |
| 13 | 310500326 | 钢管总成 II | Pipe II | 1 | | | | | |
| 14 | 310500328 | 钢管总成 IV | Pipe IV | 1 | | | | | |
| 15 | 310500007 | 钢管 | Pipe | 10 | | | | | |
| 16 | 803172299 | 接头 | Adapter | 2 | | | | | |

# 破碎锤管路

Breaker Piping

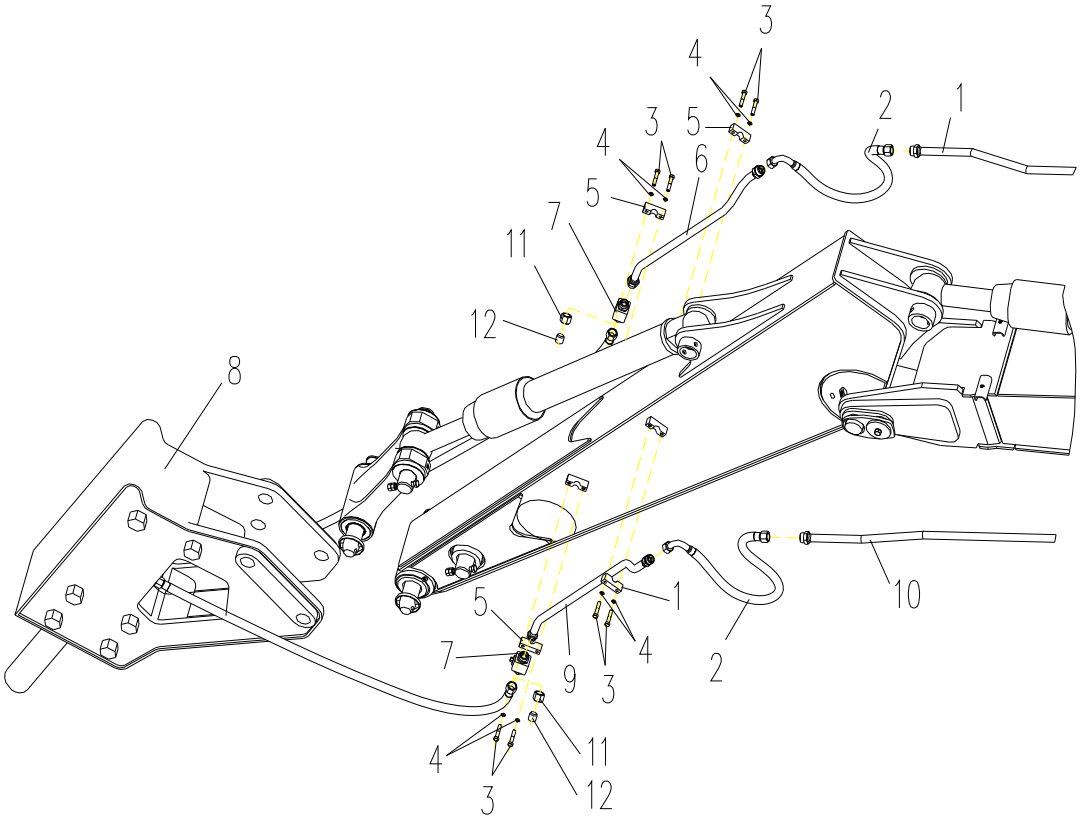

## 破碎锤管路 Breaker Piping

| 序号 ITEM | 零件代号 Part No | 零件名 | PART NAME | 数量 Q'TY | 服务代码 S.C | 适用机号 SERIAL NO | 互换性 IA | 替换零件 REPLACEABLE PART | |
|---|---|---|---|---|---|---|---|---|---|
| | | | | | | | | 零件代号 Part No | 数量 Q'TY |
| 1 | 310501252 | 破碎钢管总成 II | Pipe | 1 | | | | | |
| 2 | 803189686 | 软管总成 | Hose Assy | 2 | | | | | |
| 3 | 805000090 | 螺栓 | Bolt | 8 | | | | | |
| 4 | 805300018 | 垫圈 | Washer | 8 | | | | | |
| 5 | 310500989 | 管夹 | Clamp | 4 | | | | | |
| 6 | 310500990 | 钢管总成III | Pipe | 1 | | | | | |
| 7 | 803190174 | 球阀 | Valve | 2 | | | | | |
| 8 | 803007265 | 破碎锤 | Breaker | 1 | | | | | |
| 9 | 310500992 | 钢管总成IV | Pipe | 1 | | | | | |
| 10 | 310501250 | 破碎钢管总成 I | Pipe | 1 | | | | | |
| 11 | 819909099 | 功能螺母 | Nut | 2 | | | | | |
| 12 | 803172740 | 堵头 | Plug | 2 | | | | | |

# 破碎锤管路

Breaker Piping

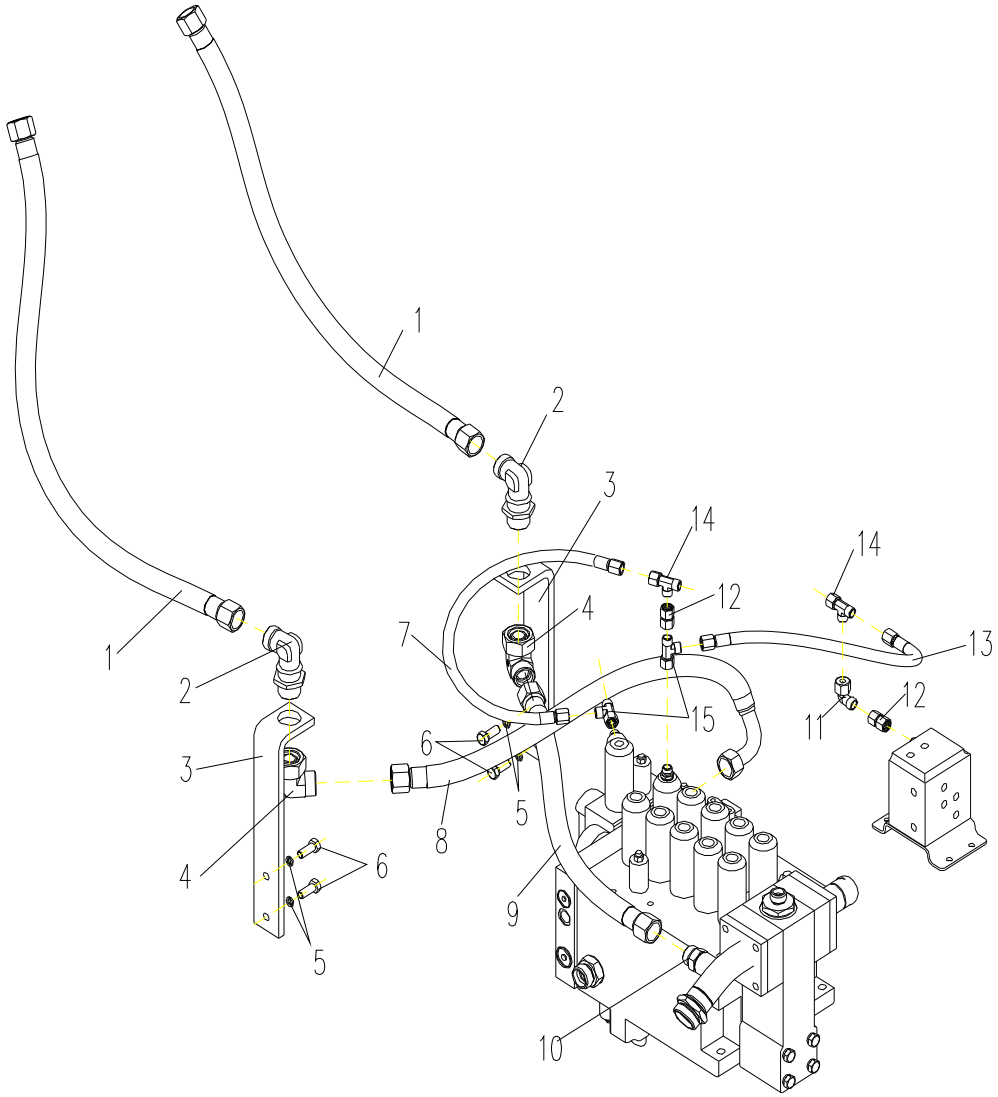

## 破碎锤管路 Breaker Piping

| 序号 ITEM | 零件代号 Part No | 零件名 | PART NAME | 数量 Q'TY | 服务代码 S.C | 适用机号 SERIAL NO | 互换性 IA | 替换零件 REPLACEABLE PART | |
|---|---|---|---|---|---|---|---|---|---|
| | | | | | | | | 零件代号 Part No | 数量 Q'TY |
| 1 | 803189480 | 软管总成 | Hose Assy | 2 | | | | | |
| 2 | 803163614 | 接头 | Adapter | 2 | | | | | |
| 3 | 310501249 | 支架 | Bracket | 2 | | | | | |
| 4 | 803166491 | 接头 | Adapter | 2 | | | | | |
| 5 | 805300018 | 垫圈 | Washer | 4 | | | | | |
| 6 | 805000716 | 螺栓 | Bolt | 4 | | | | | |
| 7 | 803172104 | 软管总成 | Hose Assy | 1 | | | | | |
| 8 | 803194193 | 软管总成 | Hose Assy | 1 | | | | | |
| 9 | 803172144 | 软管总成 | Hose Assy | 1 | | | | | |
| 10 | 803177246 | 接头 | Adapter | 1 | | | | | |
| 11 | 803166487 | 接头 | Adapter | 1 | | | | | |
| 12 | 803164777 | 接头 | Adapter | 2 | | | | | |
| 13 | 803182046 | 软管总成 | Hose Assy | 1 | | | | | |
| 14 | 803003979 | 梭阀 | Shuttle Valve | 2 | | | | | |
| 15 | 803172316 | 接头 | Adapter | 2 | | | | | |

# 标识

Name Plate

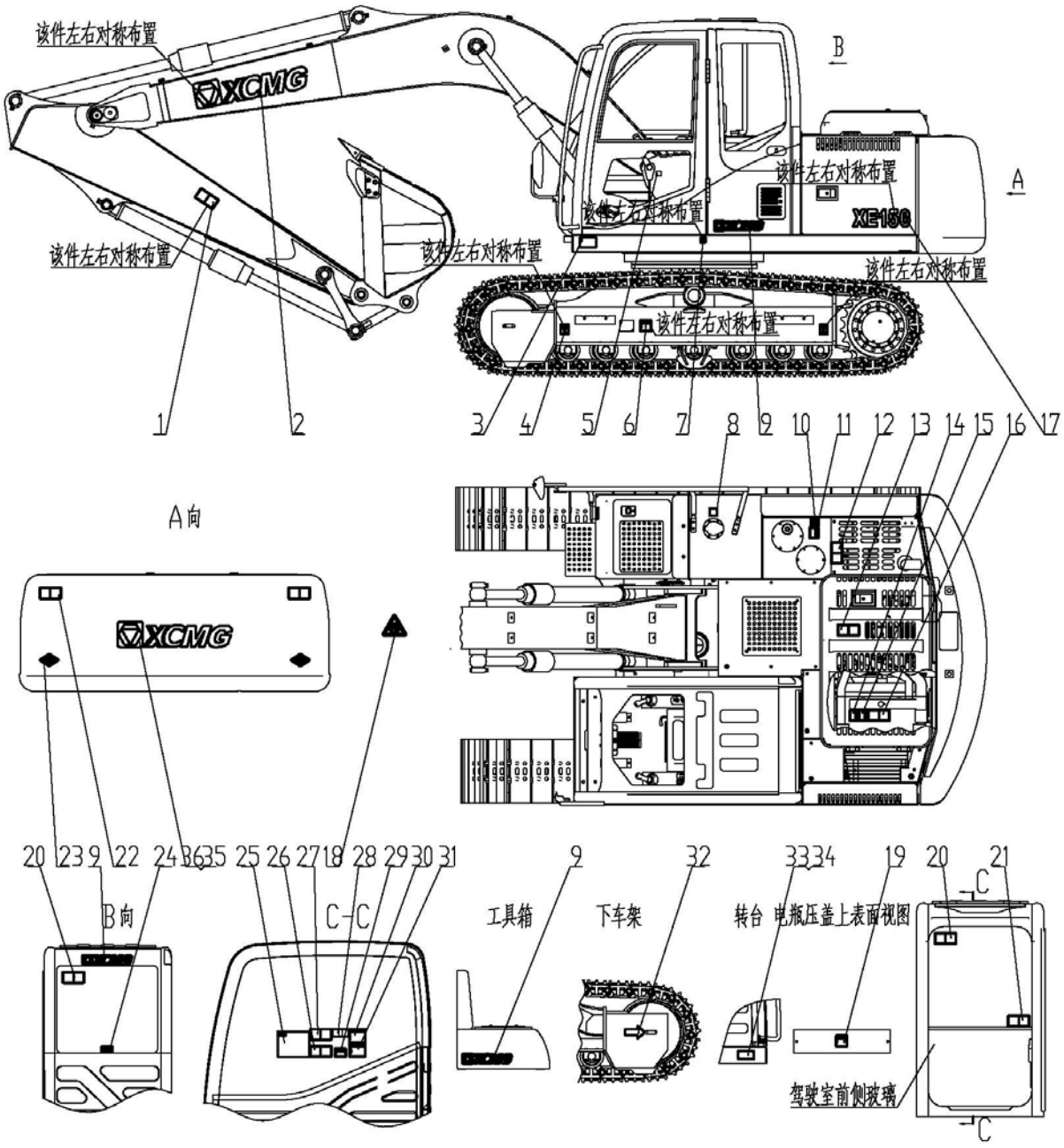

## 标识 Name Plate

| 序号 ITEM | 零件代号 Part No | 零件名 | PART NAME | 数量 Q'TY | 服务代码 S.C | 适用机号 SERIAL NO | 互换性 IA | 替换零件 REPLACEABLE PART | |
|---|---|---|---|---|---|---|---|---|---|
| | | | | | | | | 零件代号 Part No | 数量 Q'TY |
| 1 | 310402368 | 斗杆安全标志 | Safety Sign | 2 | | | | | |
| 2 | 310501085 | 公司标志 | Name of Company | 2 | | | | | |
| 3 | 310402370 | 起吊标志 | Chain | 1 | | | | | |
| 4 | 801902626 | 起吊标志 | Chain | 4 | | | | | |
| 5 | 310402372 | 安全标志 | Safety Sign | 1 | | | | | |
| 6 | 310402374 | 安全标志 | Safety Sign | 2 | | | | | |
| 7 | 310402373 | 重心标志 | Center for Gravity | 2 | | | | | |
| 8 | 239900136 | 柴油标志 | Fuel Sign | 1 | | | | | |
| 9 | 310402391 | 公司标志 | Name of Company | 3 | | | | | |
| 10 | 239900135 | 液压油标志 | Hydraulic Oil | 1 | | | | | |
| 11 | 310402376 | 安全标志 | Safety Sign | 1 | | | | | |
| 12 | 819908824 | 安全标志 | Safety Sign | 1 | | | | | |
| 13 | 310402377 | 禁踏安全标志 | Don′ t Step | 1 | | | | | |
| 14 | 310402378 | 安全标志 | Safety Sign | 1 | | | | | |
| 15 | 310402379 | 冷却液安全标志 | Coolant Sign | 1 | | | | | |
| 16 | 819906138 | 安全标志 | Safety Sign | 1 | | | | | |
| 17 | 310501086 | 型号标志 | Name of Machine | 2 | | | | | |
| 18 | 316001031 | 禁止标志 | Prohibition Sign | 1 | | | | | |
| 19 | 310402384 | 安全标志 | Safety Sign | 1 | | | | | |
| 20 | 310402380 | 逃生安全标志 | Emergency Hammer | 2 | | | | | |
| 21 | 310402381 | 机器锁紧安全标志 | Machine Lock Safety Sign | 1 | | | | | |
| 22 | 819908825 | 安全标志 | Safety Sign | 2 | | | | | |
| 23 | 316001016 | 反射器标识 | Reflecting | 2 | | | | | |
| 24 | 310402392 | 标志 | Sign | 1 | | | | | |
| 25 | 310402371 | 润滑保养标牌 | Lubrication | 1 | | | | | |
| 26 | 310402389 | 防止触电安全标志 | Prevention from Electric Shook | 1 | | | | | |
| 27 | 819906137 | 安全标志 | Safety Sign | 1 | | | | | |
| 28 | 310402385 | 操作标志 | Inspection Specification | 1 | | | | | |
| 29 | 310402388 | 安全标志 | Safety Sign | 1 | | | | | |
| 30 | 310402386 | 安全标志 | Safety Sign | 1 | | | | | |
| 31 | 310402387 | 安全标志 | Safety Sign | 1 | | | | | |
| 32 | 310402382 | 行进标志 | An Arrow | 2 | | | | | |
| 33 | 310402383 | 产品标牌 | Machine MFG.NO | 1 | | | | | |
| 34 | 805502143 | 铆钉 3×8 | Rivet | 4 | | | | | |
| 35 | 310501087 | 公司标志 | Name of Company | 1 | | | | | |
| 36 | 310501088 | 公司标志 | Name of Company | 1 | | | | | |

**徐州徐工挖掘机械有限公司**

XUGONG EXCAVATOR MACHINERY CO.,LTD
地址：中国·江苏·徐州经济开发区东环工业园 28 号
ADD： Donghuan Industrial Area No.28,Xuzhou Economic Development Zone,Jiangsu,China
邮编（Postcode）:221004
销售电话（Tel）:0516-87870116
传真(Fax)：0516-87870118
服务电话(Tel):0516-87870111
备件电话(Tel):0516-87870133
网址（Website)：http://www.xcmg.com

2011 年 09 月第 1 版
First Version，July，2011