RUTHZIL TRATOR COMERCIAL DE PEÇAS LTDA 11 97083-6812 ROLANDO CITRANGULO

Contents

1. Engine System ····· 01–02

2. Torque converter, Transmission and shift control system ····· 03–24

3. Axles System····· 25–36

4. Steering System ····· 37–42

5. Working Hydraulic System ····· 43–48

6. Brake System····· 49–62

7. Frame, Implements System and Lubrication System ····· 63–70

8. Cab, Hood and Other Cover Part System····· 71–76

9. Electrical and Air Conditioning System····· 77–82

Foreword

In order to improve the management and service standard for spare parts, we make up "Parts List of XG935Ⅲ Wheel Loader" according to the current condition of products and the needs of customers service for customers to understand the structure of XG935Ⅲ Wheel Loader and order the components and parts. Due to the development of technology and products and the needs of different customers, we will make some changes and supplement on the next edition of this Parts List. Please pay attention to it.

Please state the complete part number when ordering spare parts. The components which can not be disassembled are only stated the Assembly No. For the structure of purchased parts, please refer to the documents enclosed.

The product showed in this Parts List complies with Q/XG1005 "Wheel Loader" product standard and JB6030" General Safety Engineering Requirements Of Construction Machinery".

Copyright of Xiamen XGMA Machinery Co., Ltd, all rights reserved.

Xiamen XGMA Machinery Co.,Ltd.
April 2011 Edition 1

XGMA XG935III

ABRIL 2011

Copyright of Xiamen Machinery Co., Ltd. All rights Reserved.

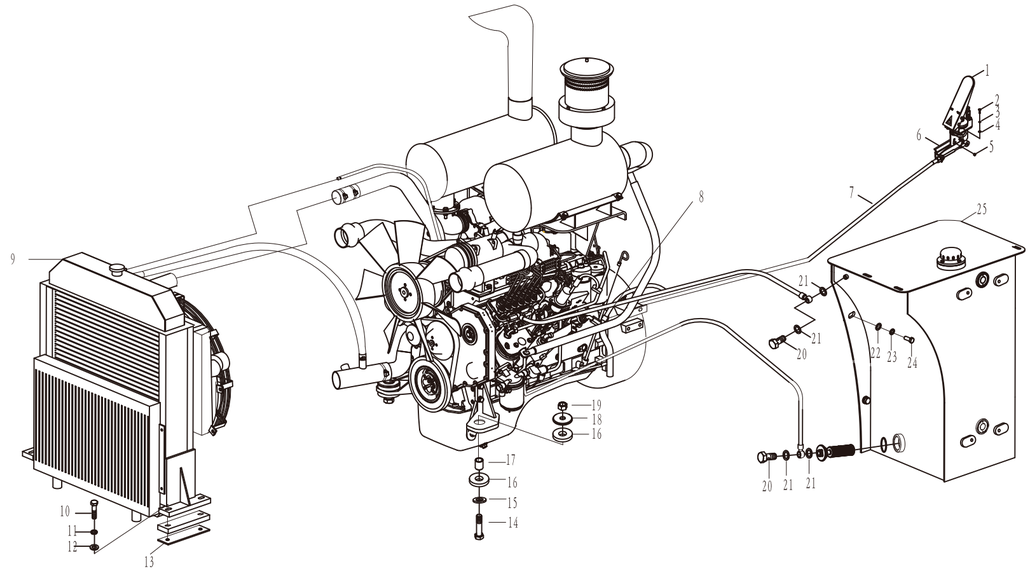

No.	PDM	Parts No.	Spec.	Qty.	Chinese Name	English Name	No.	PDM	Parts No.	Spec.	Qty.	Chinese Name	English Name
1	23C0020			1	油门控制器	Governor assem	23	06B0014	GB97.1–85	16	6	垫圈	Washer
2	00B0024	GB5783–86	M6×25	5	螺栓	Bolt	24	06B0020	GB93–87	16	6	垫圈	Washer
3	06B0021	GB93–87	6	5	垫圈	Washer	25	21C0263				燃油箱	Fuel Tank
4	06B0044	GB97.1–85	6	5	垫圈	Washer							
5	03B0013	GB6170–86	M6	5	螺母	Nut							
6	00D2043			1	支架	Bracket							
7	61C0013		100BB2050H075	1	软轴	Cable Assem							
8	40C0311	6BTAA5.9-C130 (SO11701)		1	柴油机	Engine							
9	20C0468	XG935-CUM-00a		1	散热器总成	Radiator Assem							
10	01B0034	GB5782–86	M12X60	4	螺栓	Bolt							
11	06B0013	GB93–87	12	4	垫圈	Washer							
12	06B0012	GB97.1–85	12	4	垫圈	Washer							
13	56A0001	401009		2	调整垫	Spacer							
14	01B0101	GB5785–86	M24X110	2	螺栓	Bolt							
15	06B0015		24	2	垫圈	Washer							
16	55A0061			4	垫	Spacer							
17	34A0048			2	钢管	Tube							
18	55A0062			2	垫	Spacer							
19	03B0083	GB889–86	M24X2	2	螺母	Nut							
20	04B0001	401007		2	螺钉	Screw							
21	06B0111	JB982–77		4	组合垫圈	Washer							
22	00B0016	GB5783–86	M16×35	6	螺栓	Bolt							

Copyright of Xiamen Machinery Co., Ltd. All rights Reserved.

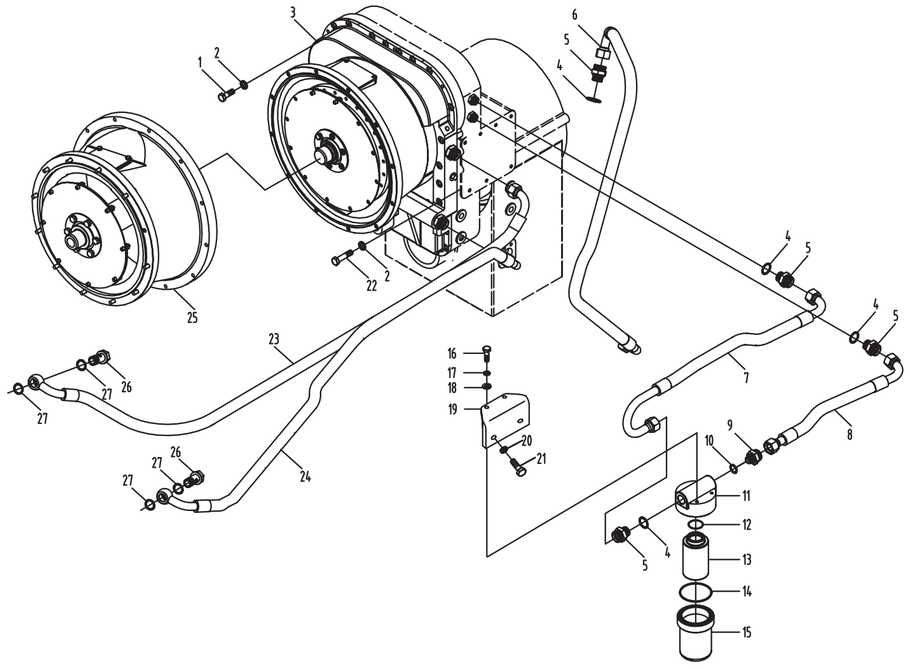

No.	PDM	Parts No.	Spec.	Qty.	Chinese Name	English Name	No.	PDM	Parts No.	Spec.	Qty.	Chinese Name	English Name
1	00B1118	GB5783–86	M10×30	26	螺栓	Bolt	23	07C0124			1	油管	Hose
2	06B0003	GB93–87	10	31	垫圈	Washer	24	07C0125			1	油管	Hose
3	52C0019			1	变矩器	Torque	25	52C0027			1	接长筒组件	Sleever Group
4	06B0072	JB982–77	30	3	垫圈	Washer	26	02B0021	402002A		2	铰接螺栓	Bolt
5	00A0039	403063B	M30×1.5	3	接头	Connector	27	06B0076	JB982–77	27	4	垫圈	Washer
6	07C0023	ZL40.50–2		1	变速泵进油管	Hose							
7	07C0123			1	油管	Hose							
8	07C0122			1	油管	Hose							
9	00A0035	ZL40.50–6	M22×1.5	1	接头	Connector							
10	06B0073	JB982–77	22	1	垫圈	Washer							
11	12C0049	402320		1	盖组件	Cover Assem							
12	10B0070	GB3452.1–92	42.5×2.65	1	O 型圈	O ring							
13	65B0015	YL–98		1	滤芯	Filler element							
14	10B0069	GB3452.1–92	95×3.55		O 型圈	O ring							
15	09D0002	402310		1	壳体	Housing							
16	00B0018	GB5783–86	M8×25	2	螺栓	Bolt							
17	06B0009	GB93–87	8	2	垫圈	Washer							
18	06B0027	GB97.1–87	8	2	垫圈	Washer							
19	23A0256			1	支撑板	Bracket							
20	00B0031	GB5783–86	M12×30	2	螺栓	Bolt							
21	06B0013	GB93–87	12	2	垫圈	Washer							
22	01B0025	GB5782–86	M10×70	5	螺栓	Blot							

Note: The higher level of Serial No.11–15 is 60C0008(402300)oil filter.

Copyright of Xiamen Machinery Co., Ltd. All rights Reserved.

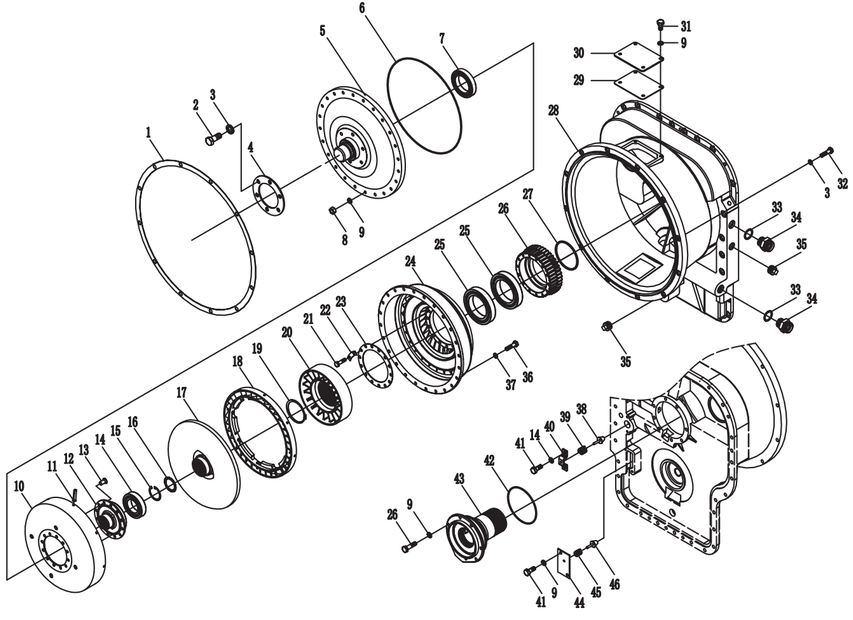

No.	PDM	Parts No.	Spec.	Qty.	Chinese Name	English Name	No.	PDM	Parts No.	Spec.	Qty.	Chinese Name	English Name
1	54B0006	402211		1	纸垫	Gasket	24	49A0016	YJSW315-3F-04		1	泵轮	Impeller
2	00B0031	GB5783-86	M12×30	6	螺栓	Bolt	25	31B0015	GB276-82	117	2	轴承	Bearing
3	06B0013	GB93-87	12	18	垫圈	Washer	26	41A0035	YJSW315-6-16		1	齿轮	Gear
4	55A0172	YJSW315-6-06		2	园垫片	Round shim	27	56A0014			1	密封环	Seal ring
5	49A0009	YJSW315-6-05C		1	罩轮	Wheel shell	28	70A0031	YJSW315-6-01c		1	壳体	Housing
6	10B0125	YJSW315-6-03		1	O 型密封圈	O ring	29	55A0179	YJSW315-6-12		1	大密封垫	Gasket
7	31B0005	GB276-82	210	1	轴承	Bearing	30	55A0178	YJSW315-6-10		1	大垫板	Plate
8	03B0005	GB6170-86	M8	24	螺母	Nut	31	00B0038	GB5783-86	M8×16	4	螺栓	Bolt
9	06B0009	GB93-87	8	40	垫圈	Washer	32	01B0008	GB5782-86	M12×45	12	螺栓	Bolt
10	49A0010	YJSW315-6-08-02		1	一级涡轮罩	Shell	33	06B0072	GB982-77	30	2	垫圈	Washer
11	60A0163	YJSW315-6-08-01		8	弹性销	Spring pin	34	00A0039	403063B	M30×1.5	2	接头	Connector
12	49A0011	YJSW315-6-08-03		1	一级涡轮毂	Case	35	03B0184	YJSW315-6-22	3/4	2	螺塞	Plug
13	09B0026	GB869-86	8×16	12	沉头铆钉	Rivet	36	00B0124	GB5783-86	M8×40	24	螺栓	Bolt
14	31B0014	GB276-82	113	1	轴承	Bearing	37	06B0185	GB848-85	8	24	垫圈	Washer
15	07B0021	GB8932-86	50	1	挡圈	Ring snap	38	73A0009	YJSW315-6-24		1	进口阀芯	Valve stem
16	55A0175	YJSW315-6-07		1 组	花键垫片	Spline spacer	39	27B0034	YJSW315-6-25		1	弹簧	Spring
17	47A0004	YJSW315-3F-02		1	二级涡轮	Turbine 2	40	52A0223	YJSW315-6-26		1	阀盖	Valve cover
18	47A0005	YJSW315-3F-05		1	一级涡轮	Turbine 1	41	00B0017	GB5783-87	M8×20	4	螺栓	Bolt
19	07B0065	GB8941-86	80	1	挡圈	Ring snap	42	10B0043	GB1235-76	135×3.1	1	O 型圈	O ring
20	49A0058	YJSW315-6-14L		1	导轮	Stator	43	53A0037	YJSW315-6-20C		1	导轮座	Stator seat
21	00B0073	GB5783-86	M8×30	22	螺栓	Bolt	44	55A0177	YJSW315-6-30		1	垫板	Plate
22	55A0176	YJSW315-6-23		10	防松垫片	Spacer	45	27B0035	YJSW315-6-29		1	弹簧	Spring
23	24A0090	YJSW315-6-19		1	压板	Plate	46	73A0008	YJSW315-6-31		1	出口阀芯	Valve stem

Copyright of Xiamen Machinery Co., Ltd. All rights Reserved.

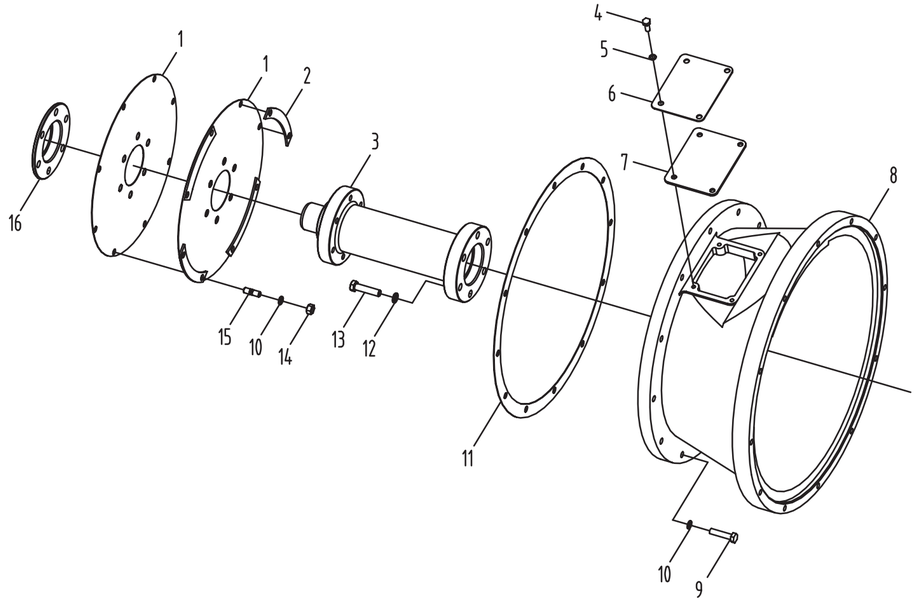

No.	PDM	Parts No.	Spec.	Qty.	Chinese Name	English Name	No.	PDM	Parts No.	Spec.	Qty.	Chinese Name	English Name
1	24A0058	502105 (CUM)		2	弹性板	Spring Plate							
2	24A0057	502103 (CUM)		4	垫片	Spacer							
3	63A0009			1	联接盘	Shaft							
4	00B0017	GB5783–86	M8X20	4	螺栓	Bolt							
5	06B0009	GB93–87	8	4	垫圈	Washer							
6	11A0104	502106 (CUM)		1	垫板	Plate							
7	55A0095	502107 (CUM)		1	垫	Spacer							
8	39A0025	502102 (CUM)		1	接长筒	Sleeve							
9	00B0172	GB5783–86	M10X45	12	螺栓	Bolt							
10	06B0003	GB93–87	10	20	垫圈	Washer							
11	54A0118	502104 (CUM)		1	纸垫	Gasket							
12	06B0013	GB93–87	12	6	垫圈	Washer							
13	01B0016	GB5782–86	M12X50	6	螺栓	Bolt							
14	03B0029	GB6173–86	M10 X1	8	螺母	Nut							
15	05B0009	GB898–88	M10X1X18	8	螺柱	Screw							
16	55A0172	YJSW315–6–06		1	圆垫片	Round shim							

Copyright of Xiamen Machinery Co., Ltd. All rights Reserved.

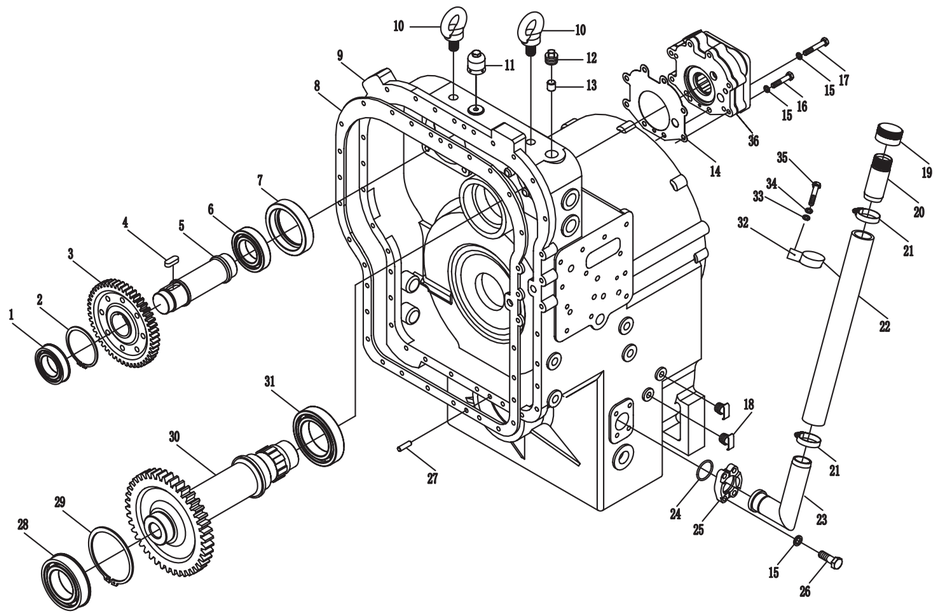

No.	PDM	Parts No.	Spec.	Qty.	Chinese Name	English Name	No.	PDM	Parts No.	Spec.	Qty.	Chinese Name	English Name
1	31B0011	GB276–94	6210N	1	轴承（50×90×20）	Bearing	23	17D0002	403061		1	加油管 B	Tube
2	07B0005	GB894.1–86	90	1	挡圈	Snap ring	24	10B0003	GB1235–76	45×3.5	1	O 形圈	O ring
3	41A0008	403056		1	转向泵驱动齿轮	Gear	25	58A0020	407021		1 付	压板	Flange
4	09B0002	GB1096–79	14×36	1	键	Key	26	00B0022	GB5783–86	M10×30	4	螺栓	Bolt
5	62A0004	403055B		1	转向泵驱动轴	Shaft	27	08B0003	GB119–86	10S7×30	2	销	Pin
6	31B0003	GB276–94	6211	1	轴承（55×100×21）	Bearing	28	31B0011	GB276–94	6210N	1	轴承（50×90×20）	Bearing
7	52A0011	403057		1	轴承座	Round base	29	07B0005	GB894.1–86	90	1	挡圈	Snap ring
8	14B0001	403021		1	密封垫	Gasket	30	40A0001	403610B		1	变速泵轴齿轮	Gear
9	70A0002	403005A		1	箱体	Housing	31	31B0010	GB276–94	6012	1	轴承（60×95×18）	Bearing
10	04B0029	GB825–88	M20	2	吊环螺钉	Screw	32	82A0040			1	管夹	Clamp
11	42C0063	403900		1	透气装置总成	Breather Assem	33	06B0056	GB95–85	8	1	垫圈	Washer
12	03B0028	403063	ZG3/4″	1	螺塞	Plug	34	06B0009	GB93–87	8	1	垫圈	Washer
13	67A0002	403028		1	圆柱堵塞	Plug	35	00B0165	GB5783–86	M8X12	1	螺栓	Bolt
14	15B0001	403609		1	密封垫	Gasket	36	11C0002	403601–608		1	变速泵	Pump
15	06B0003	GB93–87	10	12	垫圈	Washer							
16	01B0079	GB5782–86	M10×75	2	螺栓	Bolt							
17	01B0036	GB5782–86	M10×50	6	螺栓	Bolt							
18	26B0003	1305C–010	R1/4″	2	检油塞	Oil plug							
19	52A0012	403059		1	加油管盖	Cover							
20	34A0003	403060		1	加油管 A	Tube							
21	08C0004	JB8870–99	2A	2	喉箍	Clamp							
22	30A0009			1	耐油橡胶管	Hose							

Copyright of Xiamen Machinery Co., Ltd. All rights Reserved.

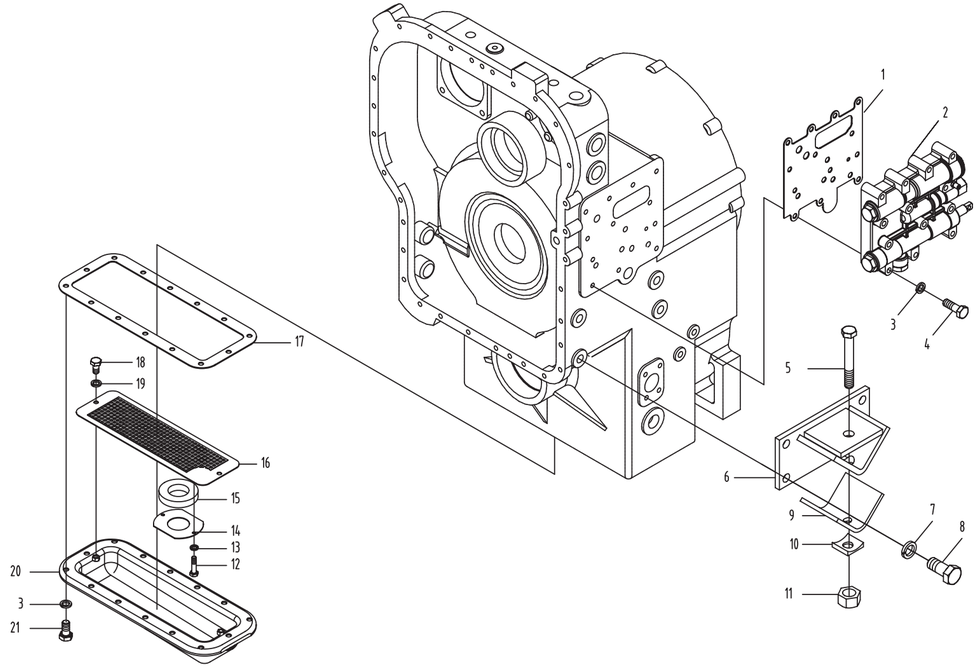

No.	PDM	Parts No.	Spec.	Qty.	Chinese Name	English Name	No.	PDM	Parts No.	Spec.	Qty.	Chinese Name	English Name
1	14B0002	403029		4	密封垫	Gasket							
2	12C0185			1	变速操纵阀	Valve							
3	06B0003	GB93-87	10	27	垫圈	Washer							
4	01B0025	GB5783-86	M10×70	13	螺栓	Bolt							
5	01B0959	GB5782-86	M18×125	2	螺栓	Bolt							
6	00D0012	403032-34		2	支座	Support							
7	06B0045	GB93-87	18	8	垫圈	Washer							
8	00B0099	GB5783-86	M18×40	8	螺栓	Bolt							
9	21B0005	403031		2	橡胶垫	Rubber spacer							
10	55A0016	403035		2	垫圈	Washer							
11	03B0654	GB889-86	M18	2	螺母	Nut							
12	00B0024	GB5783-86	M6×25	4	螺栓	Bolt							
13	06B0021	GB93-87	6	4	垫圈	Washer							
14	55A0008	403405B		2	垫板	Plate							
15	64B0001			2	永久磁铁	Magnet							
16	00D0126			1	滤网支架	Bracket							
17	17B0001	403406		1	垫片	Shim							
18	00B0019	GB5783-86	M8×15	2	螺栓	Bolt							
19	06B0034	GB859-87	8	2	垫圈	Washer							
20	09D0003			1	油底壳体	Oil pan							
21	01B0029	GB5783-86	M10×20	14	螺栓	Bolt							

Copyright of Xiamen Machinery Co., Ltd. All rights Reserved.

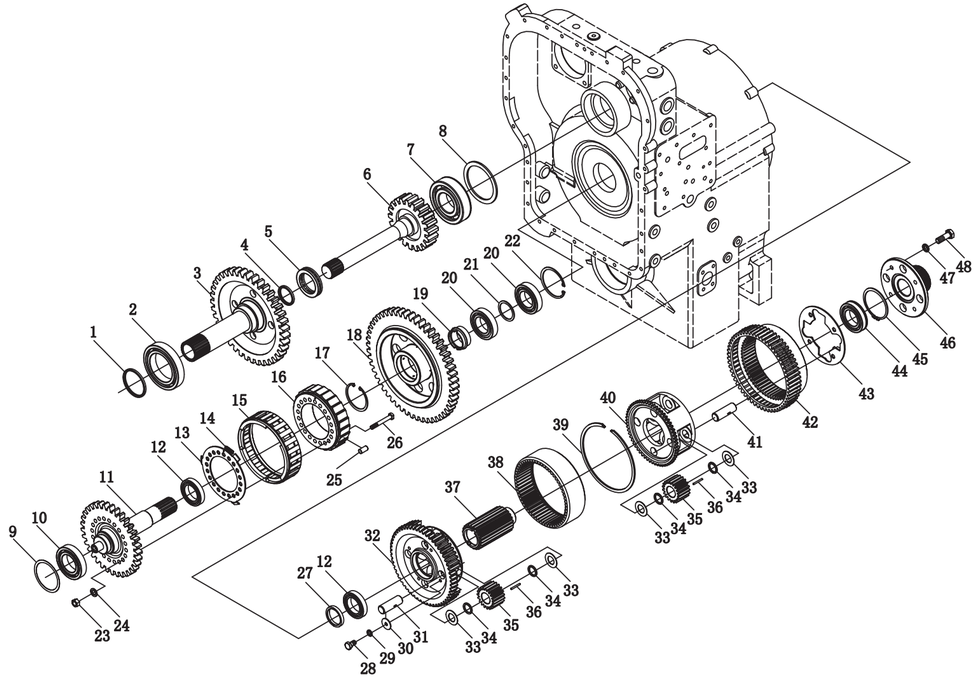

No.	PDM	Parts No.	Spec.	Qty.	Chinese Name	English Name	No.	PDM	Parts No.	Spec.	Qty.	Chinese Name	English Name
1	11B0001	403101		1	油封	Seal	25	39B0002	403207B		24	滚柱	Column
2	31B0001	GB276-94	6016	1	轴承(80×125×22)	Bearing	26	02B0007	403201		20	螺栓	bolt
3	41A0001	403103		1	输入二级齿轮	Gear	27	55A0006	403212		1	调整圈	Spacer
4	11B0002	403102		1	油封	Seal	28	01B0049	GB5783-86	M8×14	4	螺栓	Bolt
5	36B0001	GB301-94	51111	1	轴承	Bearing	29	06B0009	GB93-87	8	4	垫圈	Washer
6	41A0002	403104		1	输入一级齿轮	Gear	30	06B0031	403215		4	垫片	Shims
7	31B0002	GB276-94	6311	1	轴承	Bearing	31	61A0004	403221		4	销轴	Pin
8	56A0002	403105		1	调整垫	Spacer	32	72A0005	403213A		1	行星轮架	Planetary carrier
9	56A0003	403202		1	调整环	Shim	33	06B0032	403217		16	垫片	Shims
10	31B0003	GB276-94	6211	1	轴承	Bearing	34	55A0007	403219		16	隔离套	Sleeve
11	62A0001	403203		1	中间输入轴	Shaft	35	41A0004	403218		8	行星轮	planet
12	31B0004	GB276-94	6010	1	轴承(50×80×16)	Bearing	36	39B0007	GB309-84	4×35	176	滚针	Needle
13	52A0126	403205C		1	圆盖	Cover	37	41A0005	403226		1	太阳轮	Sun gear
14	52C0050			3	弹簧	Spring	38	42A0001	403216		1	齿圈	Ring gear
15	55A0148	403206C		1	隔离环	Ring	39	57A0001	403220		1	卡圈	Snap ring
16	49A0001	403209B		1	凸轮	Cam	40	72A0054	403223A		1	行星轮架	Planetary carrier
17	07B0033	GB893.1-86	80	1	挡圈	Snap ring	41	61A0005	403227		4	销轴	Pin
18	41A0003	403208A		1	齿轮	Gear	42	42A0002	403222A		1	齿圈	Ring gear
19	54A0011	403210		1	隔离套	Snap ring	43	52A0185	403224A		1	止动盘	Stop pan
20	31B0005	GB276-94	6210	2	轴承	Bearing	44	31B0011	GB276-94	6210N	1	轴承(50×90×20)	Bearing
21	55A0005	403211		1	隔离环	Ring	45	07B0005	GB894.1-86	90	1	挡圈	Snap ring
22	07B0029	GB983.1-86	90	1	挡圈	Snap ring	46	52A0186	403225A		1	直接挡连接盘	Connect pan
23	03B0077	GB6171-86	M10×1	20	螺母	Nut	47	06B0013	GB93-87	12	4	垫圈	Washer
24	06B0040	GB859-87	10	20	垫圈	Washer	48	00B0031	GB5783-86	M12×30	4	螺栓	Bolt

Copyright of Xiamen Machinery Co., Ltd. All rights Reserved.

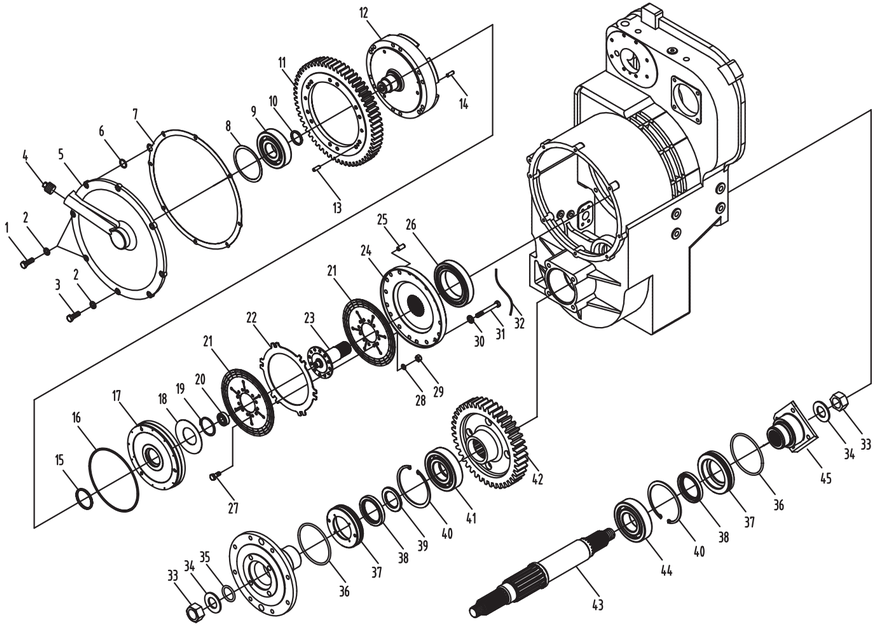

No.	PDM	Parts No.	Spec.	Qty.	Chinese Name	English Name	No.	PDM	Parts No.	Spec.	Qty.	Chinese Name	English Name
1	00B0022	GB5783–86	M10×30	6	螺栓	Bolt	25	60A0012	403504		12	圆柱销	Pin
2	06B0003	GB93–87	10	8	垫圈	Washer	26	31B0007	GB276–94	6022	1	轴承	bearing
3	00B0068	Gb5783–86	M10X38	2	螺栓	Bolt	27	00B0017	GB5783–86	M8×20	12	螺栓	Bolt
4	03B0021	403062		1	螺塞	Plug	28	06B0009	GB93–87	8	12	垫圈	Washer
5	52A0008	403002B		1	端盖	Cover	29	03B0005	GB6170–86	M8	12	螺母	Nut
6	10B0005	GB1235–76	24X2.4	1	O 型圈	O ring	30	06B0013	GB93–87	12	12	垫圈	Washer
7	15B0002	403001A		1	密封垫	Gasket	31	01B0022	403503	M12×1.25×100	12	螺栓	Bolt
8	55A0012	403517		1	调整圈	Shim	32	77A0006		2×1200	1	铁丝	Wire
9	31B0009	GB276–94	6411	1	轴承	Seal	33	03B0017	GB889–86	M33×1.5	2	螺母	Nut
10	11B0002	403102	45X53X5	1	油封	Bearing	34	06B0033	403303		2	垫圈	Washer
11	41A0007	403511		1	齿轮	gear	35	10B0001	403315	52X5.7	1	O 型圈	O ring
12	69A0001	403512A		1	直接挡油缸	Cylinder body	36	10B0002	GB1235–76	130X5.7	2	O 型圈	O ring
13	08B0003	GB119–86	10×30	2	销 D10S7×30	Pin	37	52A0006	403304A		2	油封座	Seal base
14	66A0002	403516		3	销	pin	38	11B0003	GB1387–92	70X95X12	2	骨架油封	Seal
15	11B0001	403101	70×78×5	1	油封	Seal	39	54A0012	403305		1	隔离套	Sleeve
16	11B0004	403010A		1	密封圈	Seal	40	07B0034	GB893.1–92	130	2	挡圈	Snap ring
17	50A0001	403508A		1	直接挡活塞	Piston	41	32B0001	GB283–87	92312	1	轴承	Bearing
18	27B0002	403513		1	蝶型弹簧	Spring	42	41A0006	403311		1	输出轴齿轮	Gear
19	07B0014	GB894.1–86	65	1	挡圈	Snap ring	43	62A0015			1	输出轴	Shaft
20	31B0008	GB276–94	6204	1	轴承	Bearing	44	31B0006	GB276–94	6312	1	轴承	Bearing
21	36C0002	403505–506		2	主动片	Disc Assem	45	58A0126			1	法兰	Flange
22	55A0011	403507		1	从动片	plate							
23	62A0003	403502A		1	直接挡轴	Shaft							
24	59A0001	403501		1	直接挡受压盘	Round plate							

Copyright of Xiamen Machinery Co., Ltd. All rights Reserved.

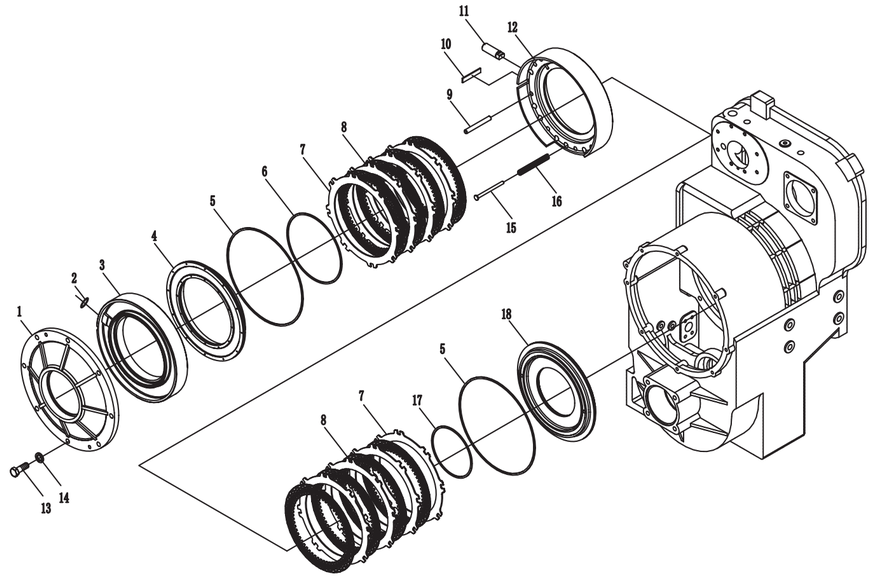

No.	PDM	Parts No.	Spec.	Qty.	Chinese Name	English Name	No.	PDM	Parts No.	Spec.	Qty.	Chinese Name	English Name
1	52A0009	403003A		1	中盖	Cover							
2	10B0032	GB1235–76	20×2.4	1	O 型圈	O ring							
3	69A0002	403004		1	缸体	Cylinder body							
4	50A0002	403008A		1	活塞体	Piston							
5	11B0005	403006A		2	密封圈	Seal							
6	11B0004	403010A		1	密封圈	Seal							
7	55A0013	403011		8	从动片	Plate							
8	42C0011	403012–013		8	主动片	Disc assem							
9	66A0003	403015		8	销	Pin							
10	10A0001	403023		1	固定板	Plate							
11	66A0004	403022		1	销	Pin							
12	71A0017	403014		1	隔离架	Bracket							
13	00B0102	GB5783–86	M14×38	8	螺栓	Bolt							
14	06B0005	GB93–87	14	8	垫圈	Washer							
15	60A0013	403016		15	销轴	Pin							
16	27B0003	403017		15	弹簧	Spring							
17	11B0006	403020A		1	密封圈	Seal							
18	50A0003	403018A		1	活塞	Piston							

Copyright of Xiamen Machinery Co., Ltd. All rights Reserved.

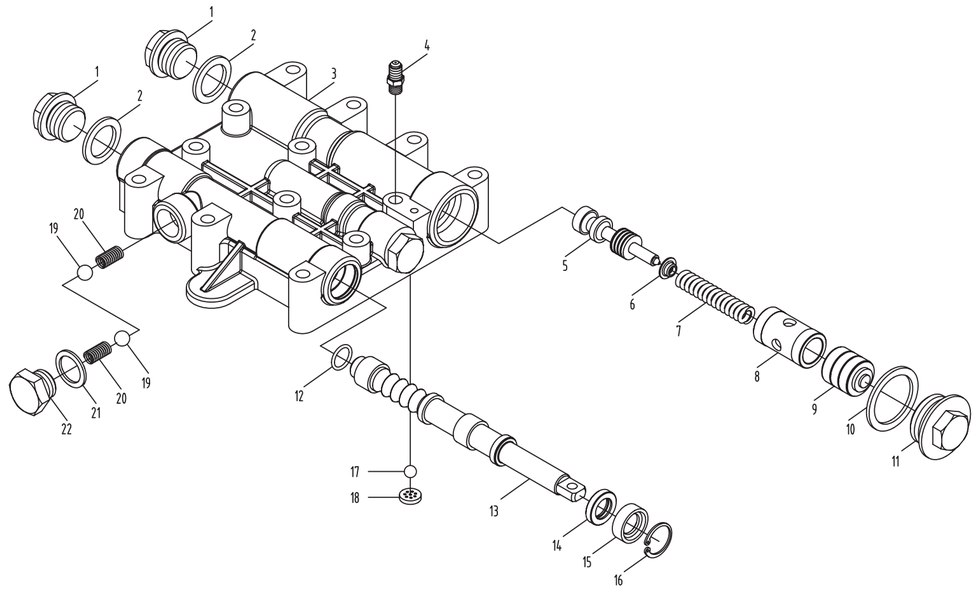

No.	PDM	Parts No.	Spec.	Qty.	Chinese Name	English Name	No.	PDM	Parts No.	Spec.	Qty.	Chinese Name	English Name
1	67A0009	403702		2	螺塞	Plug							
2	06B0072	JB982–77	30	2	垫圈	Washer							
3	73A0002	403701		1	阀体	Body							
4	00A0048	403727		1	压力表接头	Connector							
5	65A0002	403704		1	减压阀杆	Valve rod							
6	52A0047	403725		1	弹簧座	Spring base							
7	27B0016	403724		1	弹簧	Spring							
8	55A0043	403723		1	固定套	Cover							
9	65A0007	403722		1	滑块	Sliminess							
10	55A0044	403721		1	垫圈	Washer							
11	67A0011	403720		1	螺塞	Plug							
12	10B0045	GB1235–76	22×2.4	1	O 型圈	O ring							
13	65A0004	403708		1	分配阀杆	Valve rod							
14	55A0043	403711		1	挡套	Snap cover							
15	11B0069	GB13871–92	18×30×10	1	骨架油封	Seal							
16	07B0066	GB893	30	1	挡圈	Snap ring							
17	39B0004	GB308–77	3/16	1	塑料球	Ball							
18	10A0025	403726		1	圆板	Plate							
19	39B0005	GB308–77	1/2	2	钢球	Steel Ball							
20	27B0014	403707		2	弹簧	Spring							
21	06B0007	JB982–77	24	1	垫圈	Washer							
22	67A0010	403710			螺塞	Plug							

Copyright of Xiamen Machinery Co., Ltd. All rights Reserved.

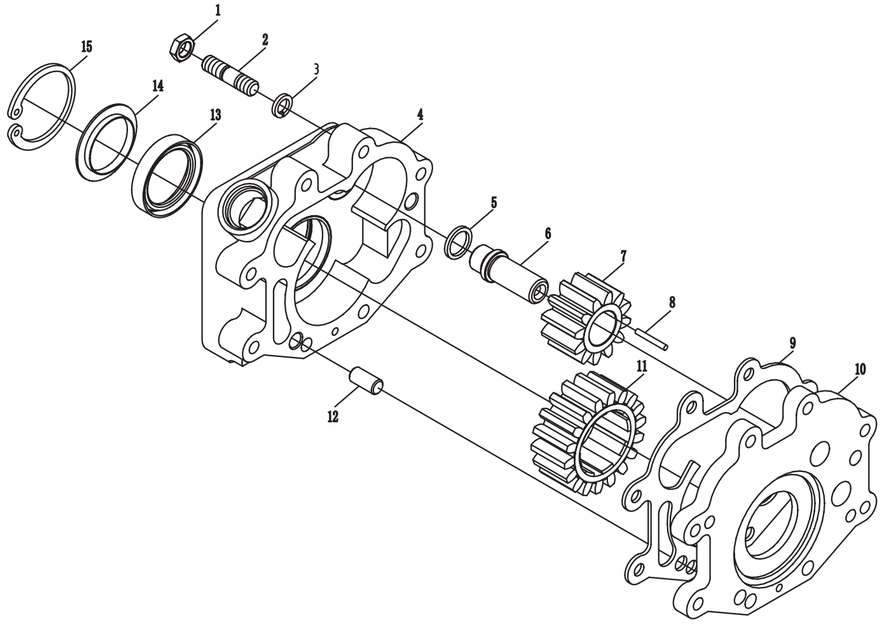

No.	PDM	Parts No.	Spec.	Qty.	Chinese Name	English Name	No.	PDM	Parts No.	Spec.	Qty.	Chinese Name	English Name
1	03B0036	GB6172-86	M12	4	螺母	Nut							
2	06B0013	GB93-87	12	4	垫圈	Washer							
3	05B0012	GB898-88	AM12×35	4	螺柱	Bolt							
4	70A0005	403601		1	泵体	Pump body							
5	55A0007	403219		1	隔离套	Sleeve							
6	60A0033	403603		1	轴	Shaft							
7	41A0011	403602		1	小齿轮	Gear							
8	39B0013	GB309-84	ϕ4×30		滚针	Needle							
9	56A0013	403606		1	密封垫	Gasket							
10	53A0008	403608		1	泵盖	Cover							
11	41A0012	403605		1	大齿轮	Gear							
12	60A0034	403607		1	圆柱销	Pin							
13	11B0075	HG4-692-67		1	油封	Seal							
14	55A0040	403604		1	挡环	Snap ring							
15	07B0009	GB893.1-92	62	1	挡圈	Snap ring							
16													
17													
18													
19													
20													
21													
22													

Copyright of Xiamen Machinery Co., Ltd. All rights Reserved.

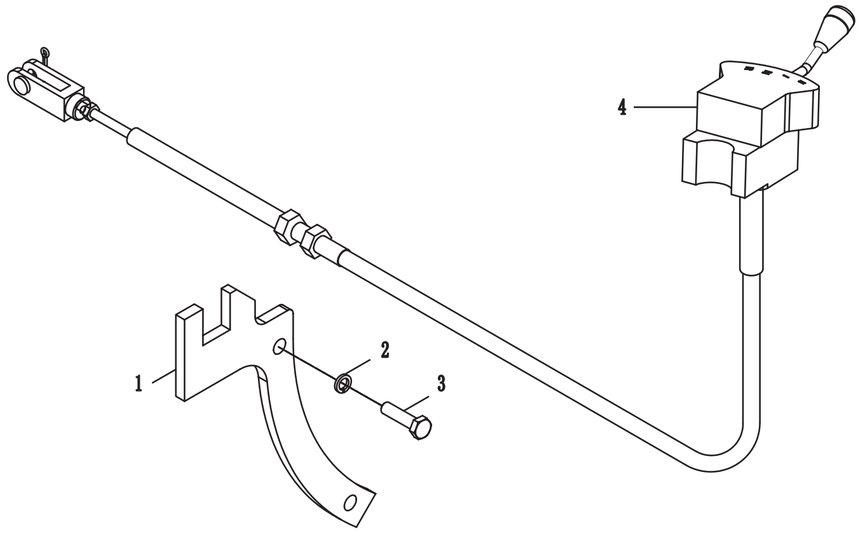

No.	PDM	Parts No.	Spec.	Qty.	Chinese Name	English Name	No.	PDM	Parts No.	Spec.	Qty.	Chinese Name	English Name
1	12A0042			1	支板	Plate							
2	06B0003	GB93-87	10	2	垫圈	Washer							
3	00B0068	GB5783-86	M10×38	2	螺栓	Bolt							
4	24C0033			1	变速操纵器	Shift Assem							

Copyright of Xiamen Machinery Co., Ltd. All rights Reserved.

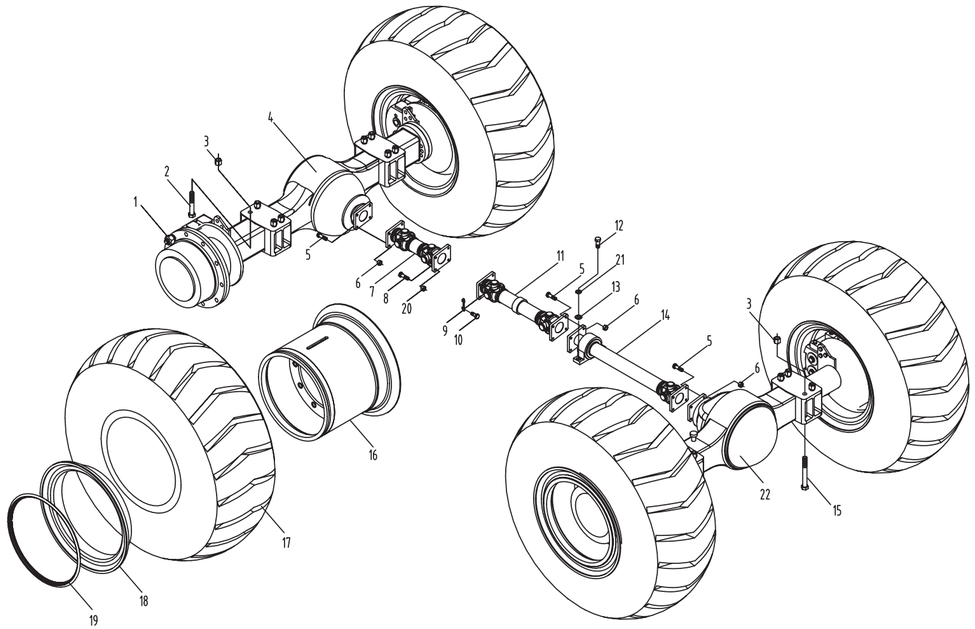

No.	PDM	Parts No.	Spec.	Qty.	Chinese Name	English Name	No.	PDM	Parts No.	Spec.	Qty.	Chinese Name	English Name
1	03B0290	zl30-017		48	轮辋螺母	Nut							
2	01B0173	GB8-88	M24×2×257	8	螺栓	Bolt							
3	03B0083	GB889-86	M24×2	16	螺母	Nut							
4	41C0129	ZL30		1	驱动桥(前)	Axle							
5	01B0160	GB5785-86	M14×1.5×45	12	螺栓	Bolt							
6	03B0003	GB889-86	M14×1.5	12	螺母	Nut							
7	51C0062			1	后传动轴	Drive shaft Assem							
8	01B0178	GB5785-86	M14×1.5×40	4	螺栓	Bolt							
9	56A0005	404028		2	止动垫圈	shims							
10	00B0079	GB5786-86	M14×1.5×30	4	螺栓	Bolt							
11	51C0061			1	中间传动轴	Drive shaft Assem							
12	00B0102	GB5783-86	M14×38	2	螺栓	Bolt							
13	06B0023	GB95-85	14	2	垫片	Washer							
14	51C0066			1	前传动轴	Drive shaft Assem							
15	01B0190	GB5785-86	M24×2×265	8	螺栓	Bolt							
16	14D0025			4	轮辋体	Rim body							
17	20B0006	GB2980-91	17.2-25×12	4	轮胎	Tire							
18	57A0030			4	挡座圈	Snap Ring							
19	57A0028			4	锁圈	Snap Ring							
20	03B0145	GB890-86	M14×1.5	4	螺母(薄)	Nut							
21	06B0005	GB93-87	14	2	垫片	Washer							
22	41C0130	ZL30		1	驱动桥(后)	Axle							

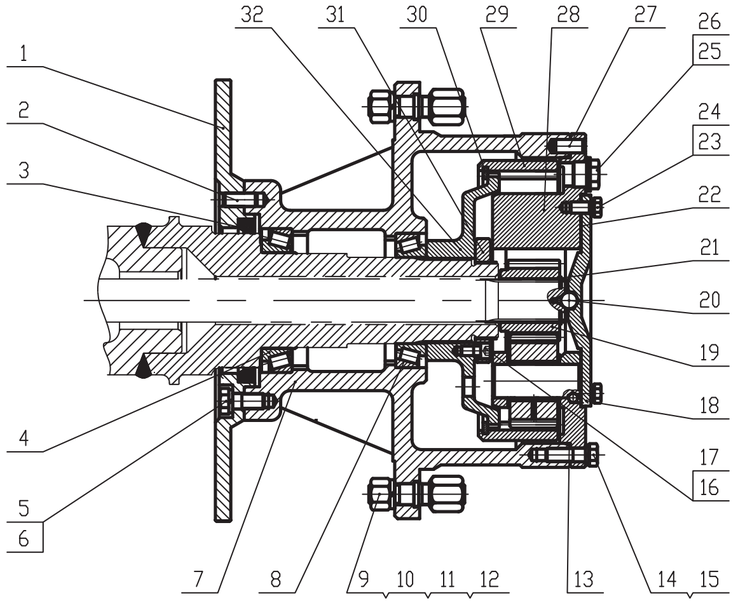

No.	PDM	Parts No.	Spec.	Qty.	Chinese Name	English Name	No.	PDM	Parts No.	Spec.	Qty.	Chinese Name	English Name
1	52A0314	JF30Q-301		1	制动盘	Disc	23	00B0031	GB5783-86	M12×30	6	螺栓	Bolt
2	08B0082	GB/T119.1-2000	14×35	2	定位销	Pin	24	06B0013	GB93-87	12	6	弹簧垫圈	Washer
3	12B0013	GB13871-92	140×170×16	1	密封圈	Seal	25	03B0716	ZL30-018	G3/4〃	2	螺塞	Plug
4	33B0051	GB/T297-1994	32020	1	轴承	Bearing	26	06B0076	JB982-77	Ø27	2	垫圈	Washer
5	01B0328	GB/T5782-2000	M16×40	12	螺栓	Bolt	27	08B0082	GB/T119.1-2000	14×35	2	销	Pin
6	06B0020	GB93-87	16	12	弹簧垫圈	Washer	28	51C0174			1	行星轮架组件	Planetary carrier assem
7	71A0051	ZL30-001		1	轮壳	Hub	29	42A0014	ZL30-010		1	内齿圈	Ring gear
8	33B0052	GB/T297-1994	32018	1	轴承	Bearing	30	57A0081	ZL30-013		1	卡圈	Snap ring
9	02B0140	ZL30-016		12	轮辋螺栓	Bolt	31	03B0292	ZL30-011		1	圆螺母	Nut
10	03B0290	ZL30-017		12	轮辋螺母	Nut	32	41A0057	ZL30-012		1	齿圈支架	Ring hub
11	06B0001	GB93-87	20	12	弹簧垫圈	Washer							
12	03B0293	GB/T1229-1991	M20×1.5	12	螺母	Nut							
13	10B0224	ZL30-009	Ø2.65	1	O 型圈	O ring							
14	01B0160	GB5785-86	M14×1.5×45	16	螺栓	Bolt							
15	06B0005	GB93-87	14	16	弹簧垫圈	Washer							
16	04B0101	GB70-85	M10×20	1	螺钉	Screw							
17	06B0003	GB93-87	10	1	弹簧垫圈	Washer							
18	52A0315	ZL30-003A		1	端盖	Cover							
19	41A0055	ZL30-004		1	太阳轮	Sun gear							
20	30B0003	GB308-84	11/16〃	1	钢球	Ball							
21	07B0092	GB/T894.1-2000	Ø45	1	挡圈	Snap ring							
22	14B0063	ZL30-008A	δ=0.5	1	盖纸垫	Shims							

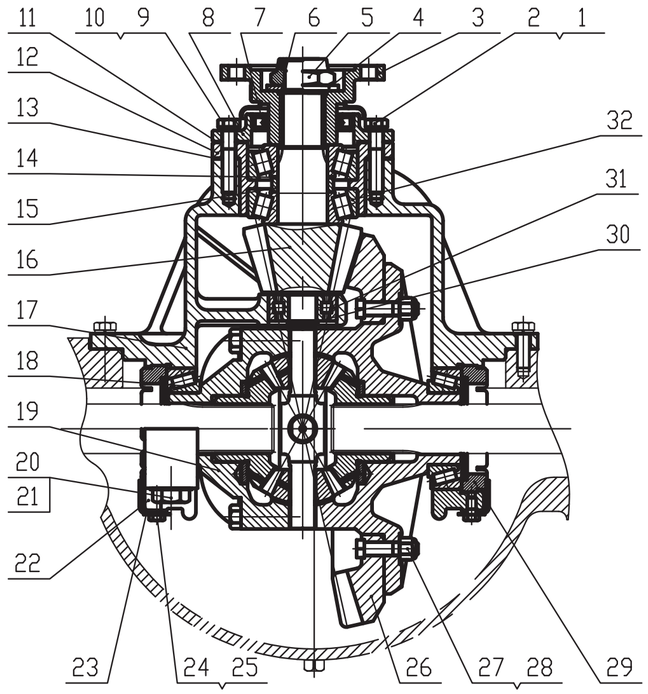

No.	PDM	Parts No.	Spec.	Qty.	Chinese Name	English Name	No.	PDM	Parts No.	Spec.	Qty.	Chinese Name	English Name
1	01B0092	GB5782–86	M10×55	1	螺栓	Bolt	22	24A0171	JF30Q–115		2	轴承盖	Bearing cage
2	06B0003	GB93–87	10	1	弹簧垫圈	Washer	23	55A0256	JF30Q–124		2	锁紧片	Lock plate
3	14D0049	JF30Q–103A		1	输入法兰	Flange	24	02B0411	GB32.1–88	M8×16	4	六角头螺栓	Bolt
4	55A0254	JF30Q–104A		1	法兰压紧片	Washer	25	06B0009	GB93–87		2	弹簧垫圈	Washer
5	03B0167	GB6172.2–2000	M33×1.5	1	尼龙锁紧薄螺母	Nut	26	45A0021	JF30Q–120A		1	被动螺旋伞齿轮(前)	Gear
6	10B0055	GB3452.1–92	3.55×37.5	1	O 形圈	O ring		45A0022	JF30Q–120B		1	被动螺旋伞齿轮(后)	Gear
7	11B0024	GB13871–92	62×93×12	1	氟橡胶骨架油封	Seal	27	01B0326	JF30Q–121A		12	螺栓	Bolt
8	52A0313	JF30Q–105A		1	密封盖	Cover	28	03B0340	GB/T6172.2–2000	M12×1.5	12	六角锁紧螺母	Nut
9	01B0041	GB5782–86	M12×55	7	螺栓	Bolt	29	03B0289	JF30Q–113A		2	调整螺母	Nut
10	06B0013	GB93–87	12	7	弹簧垫圈	Washer	30	07B0091	GB/T894.1–2000	25	1	轴用挡圈	Snap Ring
11	11B0234	JF30Q–106		1	垫片	Shims	31	32B0010	GB283–94	NUP2305E	1	圆柱滚子轴承	Bearing
12	54A0305	JF30Q–107		1	轴承套	Sleeve	32	33B0047	GB/T297–94	27709	2	圆锥滚子轴承	Bearing
13	56A0091	JF30Q–108		1 组	调整垫片	Shims							
14	11B0235	JF30Q–101		1 组	垫片	Shims							
15	54A0306	JF30Q–125		1	轴套	Sleeve							
16	45A0019	JF30Q–110A		1	主动螺旋伞齿轮(前)	Gear							
	45A0020	JF30Q–110B		1	主动螺旋伞齿轮(后)	Gear							
17	71A0058	JF30Q–109		1	托架	Carrier							
18	33B0048	GB/T297–94	807813	2	轴承	Bearing							
19	51C0171			1	差速器小总成	Diff assem							
20	02B0410	GB32.1–88	M20×90	4	六角头螺栓	Bolt							
21	06B0510	GB97.2–85	20	4	垫圈	Washer							

Copyright of Xiamen Machinery Co., Ltd. All rights reserved.

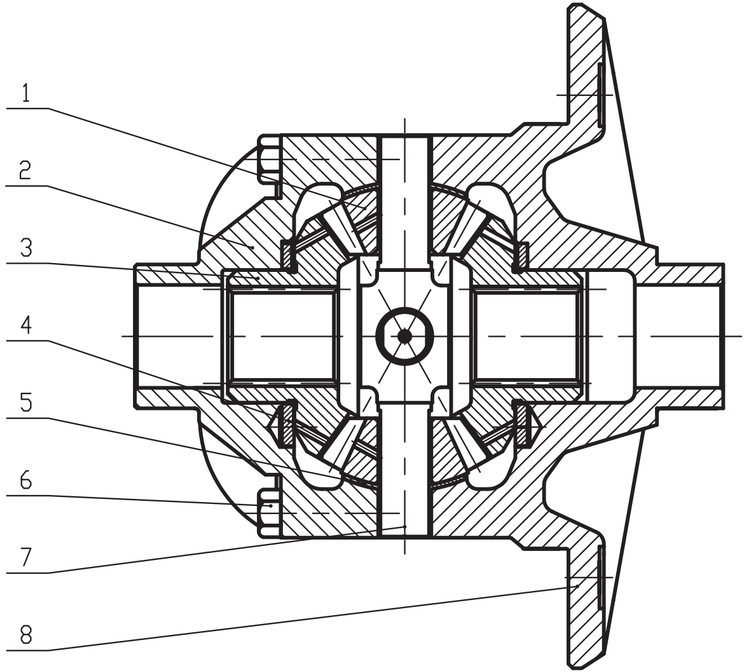

No.	PDM	Parts No.	Spec.	Qty.	Chinese Name	English Name	No.	PDM	Parts No.	Spec.	Qty.	Chinese Name	English Name
1	44A0026	JF30Q-117A		4	行星锥齿轮	Gear							
2	70A0040	JF30Q-111A		1	差速器左壳	Cage							
3	44A0025	JF30Q-116		2	半轴齿轮	Gear							
4	56A0092	JF30Q-112A		2	半轴齿轮垫片	Shims							
5	06B0298	JF30Q-118A		4	球面垫圈	Washer							
6	01B0327	GB/T5785-2000	M12×1.25×90	8	螺栓	Bolt							
7	63A0026	JF30Q-119A		1	十字轴	Cross shaft							
8	70A0041	JF30Q-122A		1	差速器右壳	Cage							
9													
10													
11													
12													
13													
14													
15													
16													
17													
18													
19													
20													
21													
22													

Copyright of Xiamen Machinery Co., Ltd. All rights Reserved.

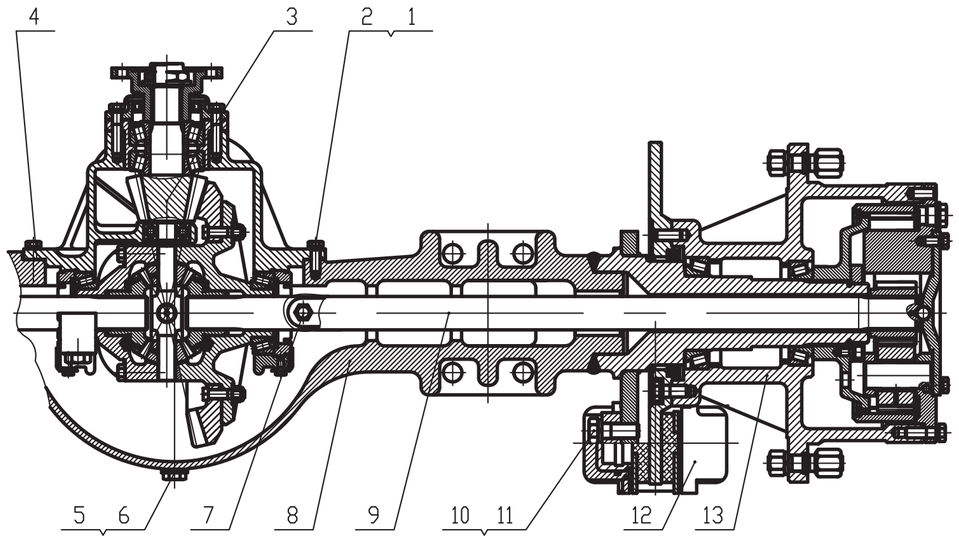

No.	PDM	Parts No.	Spec.	Qty.	Chinese Name	English Name	No.	PDM	Parts No.	Spec.	Qty.	Chinese Name	English Name
1	01B0203	GB5782-86	M12×40	14	螺栓	Bolt							
2	06B0013	GB93-87	12	14	弹簧垫圈	Washer							
3	51C0168	JF30Q-100A		1	主传动总成（前）	Main driving assem(Front)							
	51C0190			1	主传动总成（后）	Main driving assem (Rear)							
4	14B0062	JF30Q-001		1	主传动垫片	Shims							
5	03B0716	ZL30-018	G3/4〃	2	螺塞	Plug							
6	06B0076	JB982-77	Ø27	2	组合垫圈	Washer							
7	64B0017	QC/T411-1999	M10×1	1	透气阀	Breather							
8	25D0021	ZL30-200C		1	桥壳总成（前）	Axle housing (Front)							
	25D0022	ZL30-200D		1	桥壳总成（后）	Axle housing (Rear)							
9	62A0047	ZL30-005		2	半轴	Shaft							
10	02B0017	408120		8	制动器螺栓	Bolt							
11	06B0001	GB93-87	20	8	弹簧垫圈	Washer							
12	55C0101	ZL30-400		2	制动器总成	Brake							
13	51C0173			2	轮边总成	Final drive group							

Copyright of Xiamen Machinery Co., Ltd. All rights Reserved.

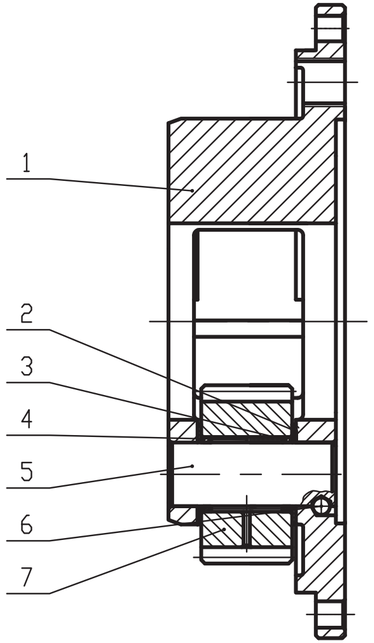

No.	PDM	Parts No.	Spec.	Qty.	Chinese Name	English Name	No.	PDM	Parts No.	Spec.	Qty.	Chinese Name	English Name
1	72A0155	ZL30-002A		1	行星轮架	Planetary carrier							
2	11B0236	ZL30-015		6	垫片	Shims							
3	54A0307	ZL30-014		6	隔套	Sleeve							
4	39B0024	GB309-84	Ø3×40	117	滚针	Needle							
5	60A0227	ZL30-007		3	行星轮轴	Pin							
6	30B0001	GB308-84	3/8〃	3	钢球	Ball							
7	41A0056	ZL30-006		3	行星轮	Planet							
8													
9													
10													
11													
12													
13													
14													
15													
16													
17													
18													
19													
20													
21													
22													

Copyright of Xiamen Machinery Co., Ltd. All rights Reserved.

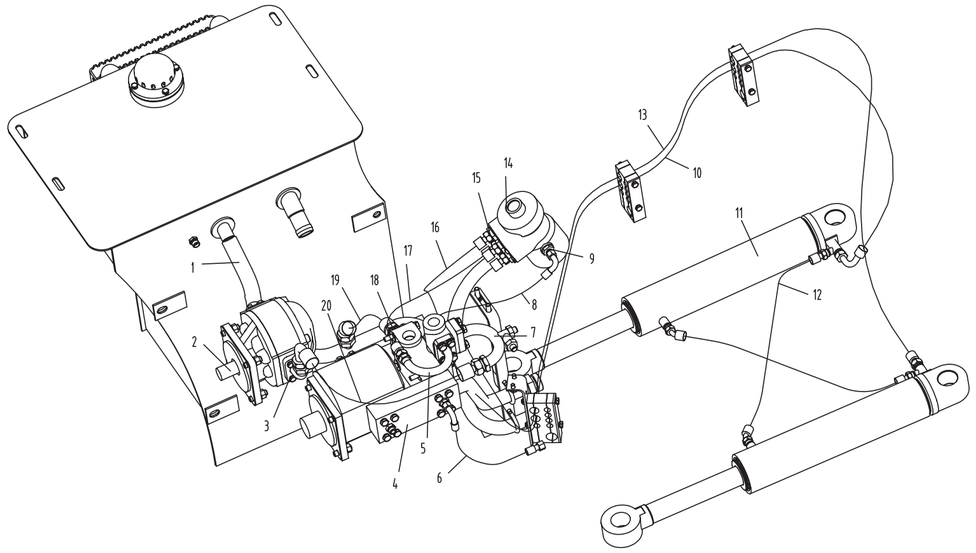

No.	PDM	Parts No.	Spec.	Qty.	Chinese Name	English Name	No.	PDM	Parts No.	Spec.	Qty.	Chinese Name	English Name
1	07C0127			1	软管	Hose							
2	11C0206	CBG2050		1	转向泵	Steering Pump							
3	17D0329			1	钢管接头	Connector							
4	17D2056			1	钢管接头	Connector							
5	17D0424			1	钢管接头	Connector							
6	05C0875		20411/20491G-16-05X1W05-350	1	软管	Hose							
7	17D1559			1	钢管接头	Connector							
8	05C0704		20411/20491G-16-05X1W05-450	1	软管	Hose							
9	30C0140		1TM16-12MD	1	接头	Connector							
10	06C1542		20441/20491G-22-08X2W08-2750 V0	1	软管	Hose							
11	10C0476			2	转向油缸总成	Cylinder assy							
12	06C0054		20411/20441G-18-06X2W06-650	2	软管	Hose							
13	06C1541		20411/20441-22-08X2W08-2950	1	软管	Hose							
14	44C0095		BZZ5-500	1	转向器	Steering Control							
15	30C0128		1CM15-22-20MD	4	接头	Connector							
16	06C1543		20411/20441G-22-08X2W08-650	1	软管	Hose							
17	06C0050		20411G-22-08X2W08-500	1	软管	Hose							
18	17D0630				钢管接头	Connector							
19	06C1544		20411/20441-30-12X2W12-380		软管	Hose							
20	06C0049		20411/20491G-30-12X2W12-600	1	软管	Hose							
21													
22													

Copyright of Xiamen Machinery Co., Ltd. All rights Reserved.

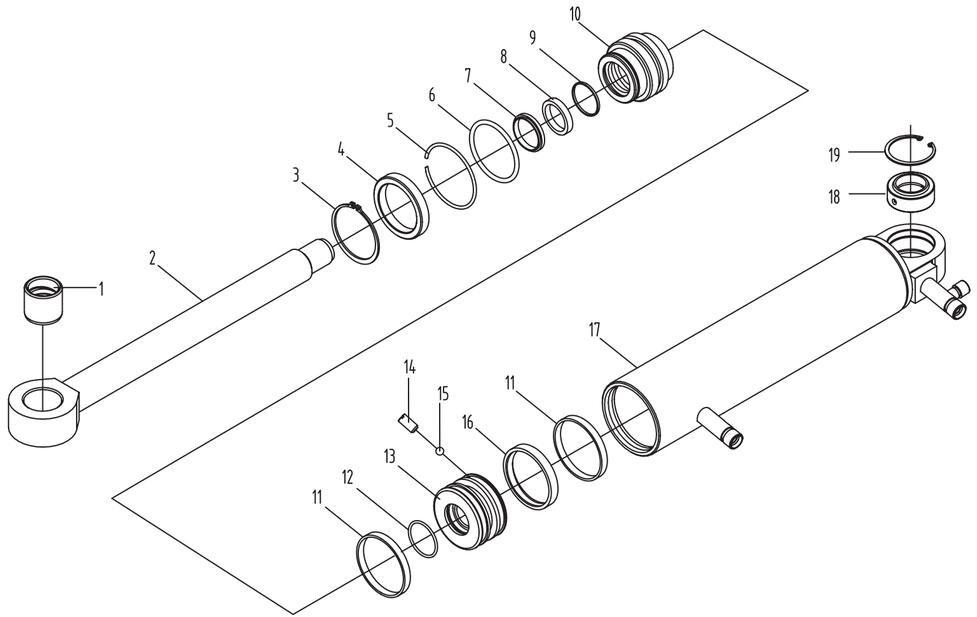

No.	PDM	Parts No.	Spec.	Qty.	Chinese Name	English Name	No.	PDM	Parts No.	Spec.	Qty.	Chinese Name	English Name
1	54A1039	ZI30C.12D.-1		1	轴套	Bearing							
2	11D0045	ZL30H.12.1-005		1	活塞杆	Piston rod							
3	07B0008	GB894.1-86	70	1	挡圈	Snap ring							
4	07B0310	ZL3063-00-03		1	挡环	Ring snap							
5	07B0311	ZL3063-00-04		1	内卡圈	Snap ring							
6	10B0100	GB1235-76	80X5.7	1	O 型圈	O Ring							
7	15B0049	PU11	45X53X7.8	1	PU 防尘圈	PU Dustproof ring							
8	15B0050	T20	45X55X5.7	1	U 型密封圈	U washer							
9	11B0380	YZJ0450	d45	1	轴用阶梯圈	Seal							
10	54A1038	ZL30.12.1-002		1	导向套	Guide bush							
11	11B0381	YZJ5908		2	支承环	Wear ring							
12	10B0010	GB1235-76	50X3.1	1	O 型圈	O Ring							
13	50A0101	ZL3063-00-06		1	活塞	Piston							
14	04B1055	GB/T77-2000	M8X16	1	平端紧定螺钉	Screw							
15	30B0055	GB308-1986	ϕ5	1	钢球	Steel ball							
16	16B0057		D80	1	组合密封圈	Seal							
17	10D0476			1	油缸体	Cylinder case							
18	35B0050	GB/T304.1-1988	GE35ES	1	关节轴承	Bearing							
19	07B0309	GB/T893.2-1986	55	2	孔用弹性挡圈	Snap ring							
20													
21													
22													

Copyright of Xiamen Machinery Co., Ltd. All rights Reserved.

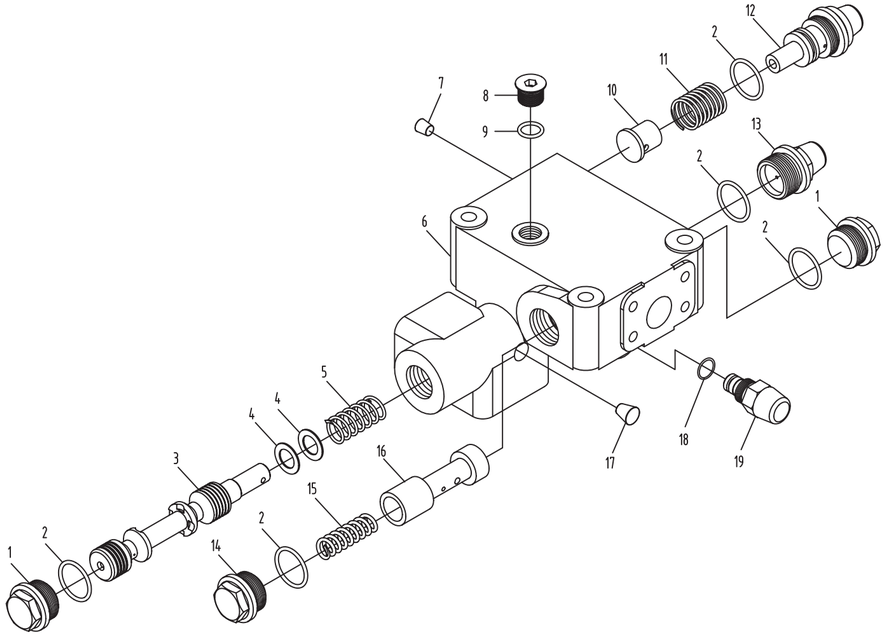

No.	PDM	Parts No.	Spec.	Qty.	Chinese Name	English Name	No.	PDM	Parts No.	Spec.	Qty.	Chinese Name	English Name
1	03B0264	YXH-07		1	螺塞 I	Plug							
2	10B0208	GB3452.1-82	28×2.55	5	O 型圈	O Ring							
3	65A0017	YXH-02		1	优先阀芯	Spool							
4	55A0239	YXH-05		1	垫片	Shim							
5	27B0072	YXH-04		1	优先阀弹簧	Spring							
6	73A0026	YXH-01		1	阀体	Valve Body							
7	03B0265	CBD-F15-1.22	ZG’/8’’	1	圆锥螺堵	Plug							
8	10B0032	GB1235-76	20×2.4	1	O 型圈	O Ring							
9	03B0266	D32-3		1	螺塞	Plug							
10	12C0137	YXH-11		1	单向阀	Check Valve							
11	27B0073	YXH-10		1	单向阀弹簧	Spring							
12	12C0135	YXH-06		1	安全阀 I	Relief Valve							
13	03B0267	YXH-03		1	控制口螺塞	Plug							
14	03B0268	YXH-09		1	螺塞 II	Plug							
15	27B0074	SXH25-13		1	卸荷阀弹簧	Spring							
16	65A0018	YXH-08		1	卸载阀芯	Spool							
17	03B0269	CBD-F15-7.00	ZF’/4’’	1	圆锥螺堵	Plug							
18	10B0210	GB3452.1-82	15X1.8	1	O 型圈	O Ring							
19	12C0136	YXH-12		1	安全阀 II	Relief Valve							

Copyright of Xiamen Machinery Co., Ltd. All rights Reserved.

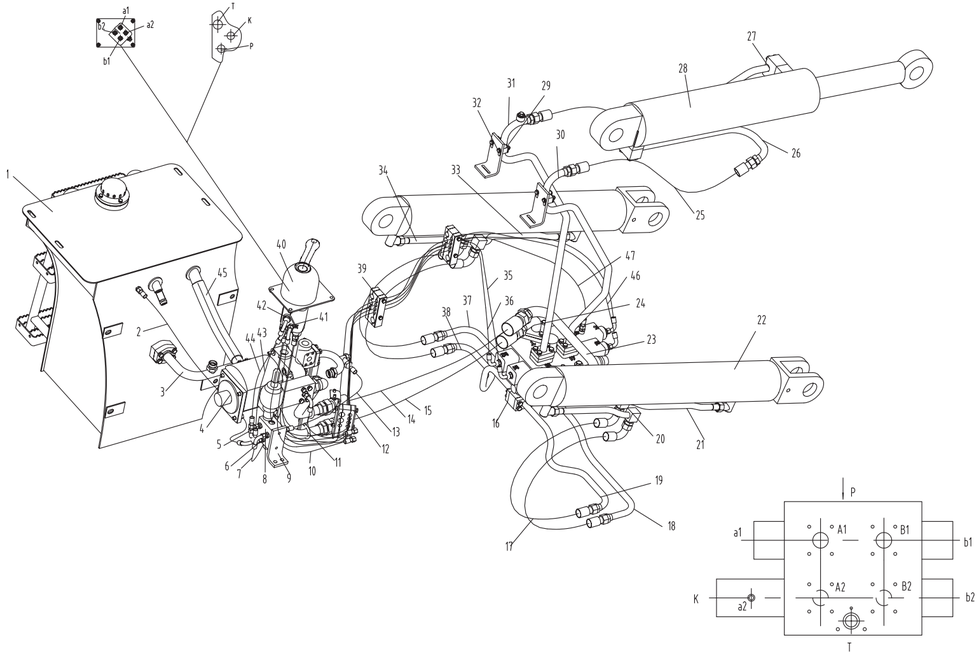

No.	PDM	Parts No.	Spec.	Qty.	Chinese Name	English Name	No.	PDM	Parts No.	Spec.	Qty.	Chinese Name	English Name
1	21C0278			1	液压油箱	Hydraulic oil tank	25	06C0055		20411G-300-12X2W122-950	2	软管	Hose
2	05C0610		20411/20491G-16-05X1W05-900	1	软管	Hose	26	17D0317			1	钢管接头	Tube Joint
3	17D2057			1	钢管接头	Tube Joint	27	17D0316			1	钢管接头	Tube Joint
4	11C0028		CBGq2063	1	齿轮泵	Gear Pump	28	10C0524			1	转斗油缸	Tilt Cylinder
5	32C0081		ETL-10-16	2	接头	Connector	29	82A0057			2	管夹	Clamp
6	30C0243		1LM-10-16-14MD	4	接头	Connector	30	17D0318			1	钢管接头	Tube Joint
7	05C0609		20491G-16-05X1W05-450 V180		软管	Hose	31	17D0319			1	钢管接头	Tube Joint
8	12C0059		WYF-21	1	供油阀	Oil supply Valve	32	23A0262			2	安装板	Plate
9	23A0175			1	板	Plate	33	17D1553			1	钢管接头	Tube Joint
10	05C0537		20411/20491G-16-05X1W05-650	1	软管	Hose	34	17D1551			1	钢管接头	Tube Joint
11	08C0297			1	管夹	Clamp	35	05C0793		20411/20491G-16-05X1W05-2800	1	软管	Hose
12	08C0042			2	管夹	Clamp	36	05C0792		20411/20491G-16-05X1W05-2700	1	软管	Hose
13	05C0611		20411/20441G-16-05X1W05-450	1	软管	Hose	37	17D1558			1	钢管接头	Tube Joint
14	07C0675		20411-42-16x3w-900	1	软管	Hose	38	17D1554			1	钢管接头	Tube Joint
15	07C0676		20411-42-20X1W -900	1	软管	Hose	39	08C0276			1	管夹	Clamp
16	17D0938			2	钢管接头	Tube Joint	40	12C0233			1	先导阀	Pilot Valve
17	06C0862		20411/20491G-27-12X2W12-1350+HPS	4	软管	Hose	41	30C0243		1LM-10-16-14MD	11	接头	Connector
18	17D1555			1	钢管接头	Tube Joint	42	30C0279		1LM-10-16-18MD	1	接头	Connector
19	17D1556			1	钢管接头	Tube Joint	43	05C0790		20411/20491G-16-05X1W05-600	1	软管	Hose
20	17D1549			1	钢管接头	Tube Joint	44	05C0791		20411/20491G-16-05X1W05-550	1	软管	Hose
21	17D1548			1	钢管接头	Tube Joint	45	07C0129		ϕ38L=410	1	软管	Hose
22	10C0523			2	动臂油缸	Boom Cylinder	46	05C0794		20491G-16-05X1W05-3000 V180	2	软管	Hose
23	17D0323			1	钢管接头	Tube Joint	47	05C0795		20411/20441G-16-05X1W05-450	1	软管	Hose
24	17D0324			1	钢管接头	Tube Joint	48						

Copyright of Xiamen Machinery Co., Ltd. All rights Reserved.

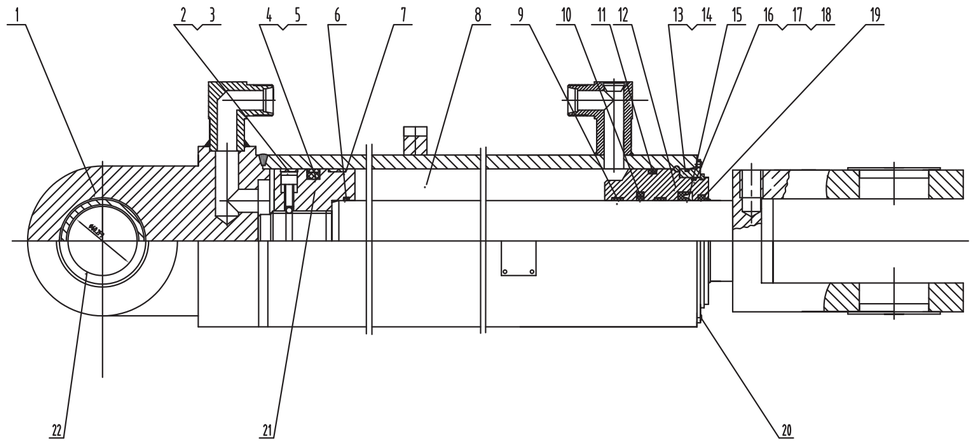

No.	PDM	Parts No.	Spec.	Qty.	Chinese Name	English Name	No.	PDM	Parts No.	Spec.	Qty.	Chinese Name	English Name
1	10C0523			1	油缸体	Cylinder Body							
2	04B0095	GB/T70.1–2000	M8x20	1	内六角螺钉	Serew							
3	39B0004	GB/T308–1989	ϕ5	1	钢球	Steel ball							
4	11B0013	ZGP125–01	125	1	密封环	Sealing Ring							
5	11B0015	ZGP125–03		1	垫环	Lock Washer							
6	10B0080	GB1235–76	75x3.1	1	O 形圈	O Ring							
7	11B0014	ZGP125–02	125x3x15	2	支撑环	Ring Snap							
8	11D0006	ZL30H15.6–20		1	活塞杆	Piston Rod							
9	11B0056	ZL30H15.6–05	70x75x12	2	支撑环	Ring Snap							
10	11B0035	YZJ–0700	70x85.5x6.3	1	斯特封	Seal Ring							
11	10B0024	GB1235–76	125x5.7	1	O 形圈	O Ring							
12	54A0153	ZL30H15.6–01		1	导向套	Guide Bush							
13	57A0035	ZL30H15.6–02		1	挡环	Ring Snap							
14	57A0036	407202D		1	钢丝挡圈	Ring Snap							
15	11B0057	T20	70x85x11.4	1	U 形圈	U Ring							
16	10B0046	GB1235–76	105x3.1	1	O 形圈	O Ring							
17	10B0023	GB1235–76	125x3.1	1	O 形圈	O Ring							
18	07B0051	GB/T894.1–1986	105	1	弹性挡圈	Ring Snap							
19	12B0044	PUS	70x80x6.3/9	1	防尘圈	Dust – proff Ring							
20	04B0105	GB/T73–1985	M6x8	4	紧定螺钉	Serew							
21	50A0019	ZL30H15.6–03		1	活塞	Piston							
22	54A0154	ZL30H15.6–04		1	轴套	bushing							

Copyright of Xiamen Machinery Co., Ltd. All rights Reserved.

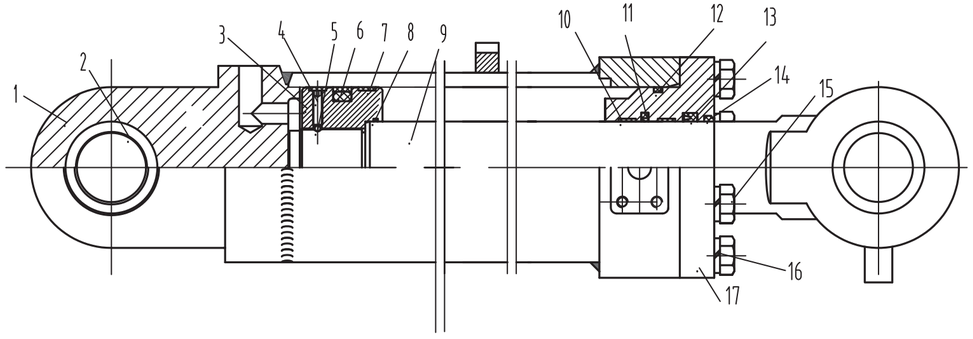

No.	PDM	Parts No.	Spec.	Qty.	Chinese Name	English Name	No.	PDM	Parts No.	Spec.	Qty.	Chinese Name	English Name
1	10C0524	ZL30H15.7-100		1	油缸体	Cylinder Body							
2	54A0155	L3071-07-00		2	轴套	bushing							
3	50A0020	ZL30H15.7-002		1	活塞	Piston							
4	04B0095	GB/T70.1-2000	M8x20	1	内六角螺钉	Serew							
5	39B0004	GB/T308-1989	ϕ5	1	钢球	Steel ball							
6	55A0124	L3071		1	格来圈								
7	11B0058	YH407100D	140x3x15	2	支撑环	Ring Snap							
8	10B0030	GB1235-76	85x3.1	1	O 形圈	O Ring							
9	11D0007	10C0075-00		1	活塞杆	Piston Rod							
10	11B0059	ZL30H15.7-005	80x85x15	2	支撑环	Ring Snap							
11	11B0060	YZJ-0800	D80	1	斯特封	Seal Ring							
12	10B0099	GB1235-76	140x5.7	1	O 形圈	O Ring							
13	11B0057	T20		1	U 形圈	U Ring							
14	12B0045	PUS	80x90x6.3/9	1	防尘圈	Dust – proff Ring							
15	01B0176	GB5785-86	M20x2x75	8	螺栓	Bolt							
16	06B0001	GB/T93-87	20	8	垫圈	Washer							
17	52A0169	ZL30H15.7-004		1	缸盖	Cylinder cover							

Copyright of Xiamen Machinery Co., Ltd. All rights Reserved.

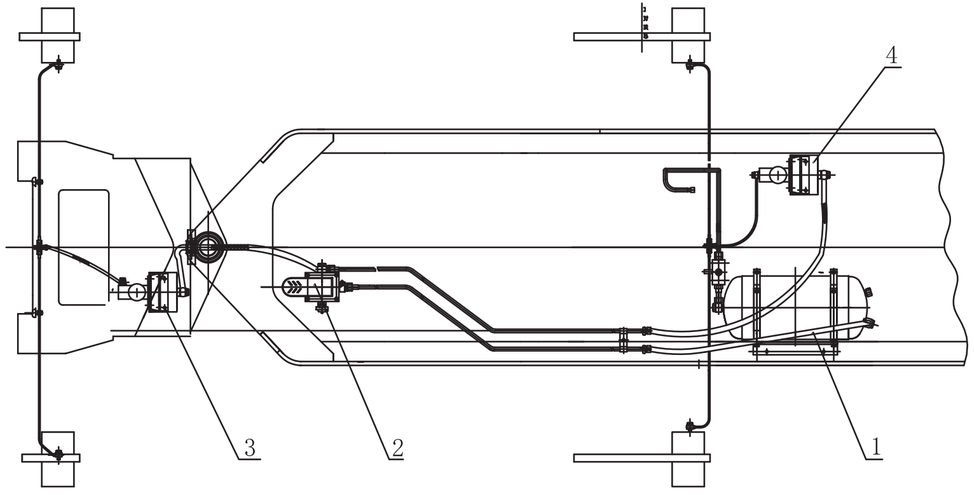

No.	PDM	Parts No.	Spec.	Qty.	Chinese Name	English Name	No.	PDM	Parts No.	Spec.	Qty.	Chinese Name	English Name
1	55C0065			1	储气筒组件	Veservoir group							
2	55C0061			1	气制动阀组件	Blake valve							
3	55C0063			1	前桥加力泵组件	Booster group							
4	55C0064			1	后桥加力泵组件	Booster grour							

Copyright of Xiamen Machinery Co., Ltd. All rights Reserved.

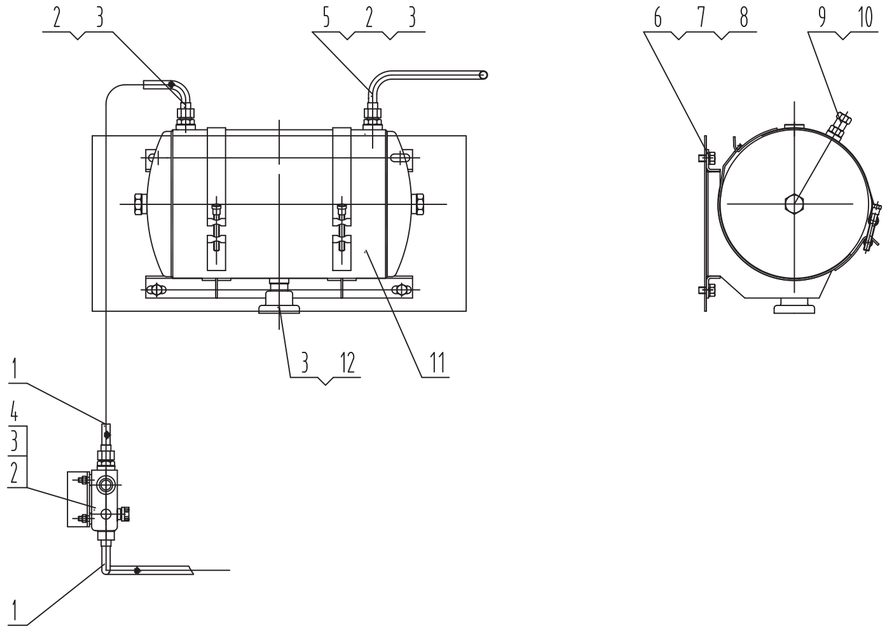

No.	PDM	Parts No.	Spec.	Qty.	Chinese Name	English Name	No.	PDM	Parts No.	Spec.	Qty.	Chinese Name	English Name
1	04C0018			2	不锈钢软管	Tube							
2	00A0001	408210		4	接头	Connector							
3	56A0006	408206		5	垫圈	Spacer							
4	55C0033	JL990109		1	卸荷阀	Valve							
5	17D0353			1	钢管	Tube							
6	00B0014	GB5783-86	M12X20	4	螺栓	Bolt							
7	06B0013	GB93-87	12	4	垫圈	Spacer							
8	06B0012	GB97.1-85	12	4	垫圈	Spacer							
9	54C0006	JL990109		1	安全阀	Valve							
10	06B0011	408416		1	垫圈	Spacer							
11	55C0068			1	储气罐总成	Air Reservoir Group							
12	12C0061	JL990109001		1	自动排水阀	Valve							

Copyright of Xiamen Machinery Co., Ltd. All rights Reserved.

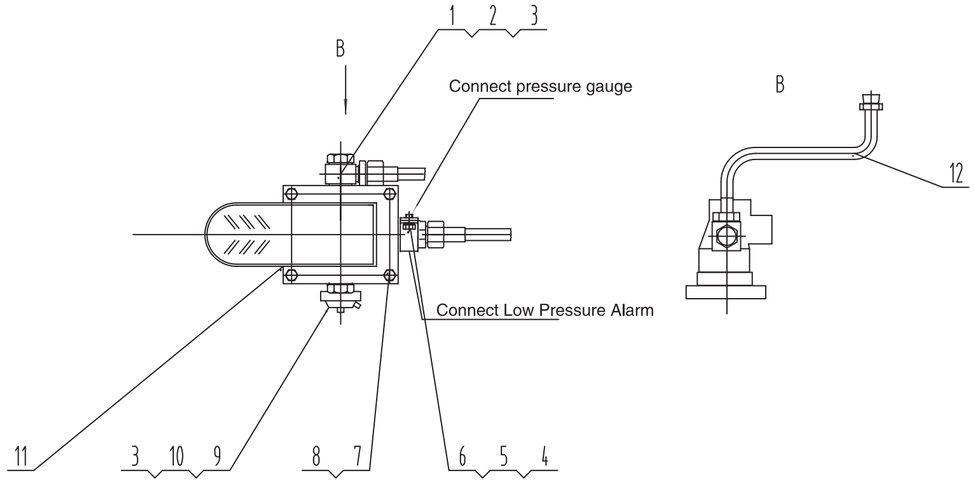

No.	PDM	Parts No.	Spec.	Qty.	Chinese Name	English Name	No.	PDM	Parts No.	Spec.	Qty.	Chinese Name	English Name
1	04A0047			1	接头块	Connector							
2	01B0004	408207		1	螺栓	Bolt							
3	56A0006	408206		4	垫圈	Spacer							
4	03A0044			1	螺栓	Bolt							
5	04A0046			1	接头块	Connector							
6	56A0034			2	垫圈	Spacer							
7	06B0009	GB93-87	8	4	垫圈	Spacer							
8	00B0073	GB5783-86	M8X30	4	螺栓	Bolt							
9	00A0001	408210		1	螺栓	Bolt							
10	55C0039	JL990109		1	制动灯开关	Blake light switch							
11	55C0058	JL990109XG30		1	制动控制阀	Valve							
12	17D0334			1	钢管	Tube							

Copyright of Xiamen Machinery Co., Ltd. All rights Reserved.

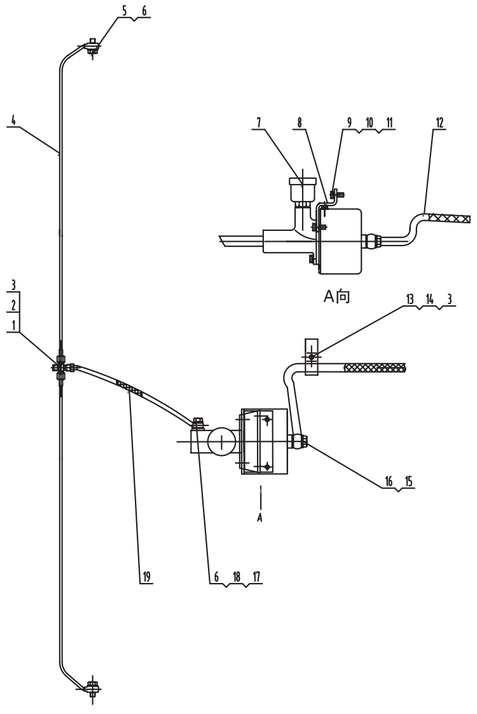

No.	PDM	Parts No.	Spec.	Qty.	Chinese Name	English Name	No.	PDM	Parts No.	Spec.	Qty.	Chinese Name	English Name
1	02A0001	408020		1	接头	Connector							
2	00B0018	GB5783-86	M8X25	1	螺栓	Bolt							
3	06B0027	GB93-87	8	2	垫圈	Spacer							
4	17D0338			2	铜管	Tube							
5	03A0015	408101		2	接头	Connector							
6	55A0028	408115		5	垫圈	Spacer							
7	55C0060	XM20R			空气加力泵	Booster							
8	22A0036			1	板	Plate							
9	00B0028	GB5783-86	M10X25	4	螺栓	Bolt							
10	06B0003	GB93-87	10	4	垫圈	Plate							
11	06B0004	GB97.1-85	10	4	垫圈	Bolt							
12	04C0013			1	软管	Hose							
13	82A0062			1	管夹	Clip							
14	00B0038	GB5783-86	M8X16	2	螺栓	Bolt							
15	01B0004	408207		1	螺栓	Bolt							
16	56A0006	408206		2	垫圈	Spacer							
17	00A0083	408314		1	管接头	Connector							
18	55A0029	408102		1	垫圈	Spacer							
19	05C0071			1	软管	Hose							

Copyright of Xiamen Machinery Co., Ltd. All rights Reserved.

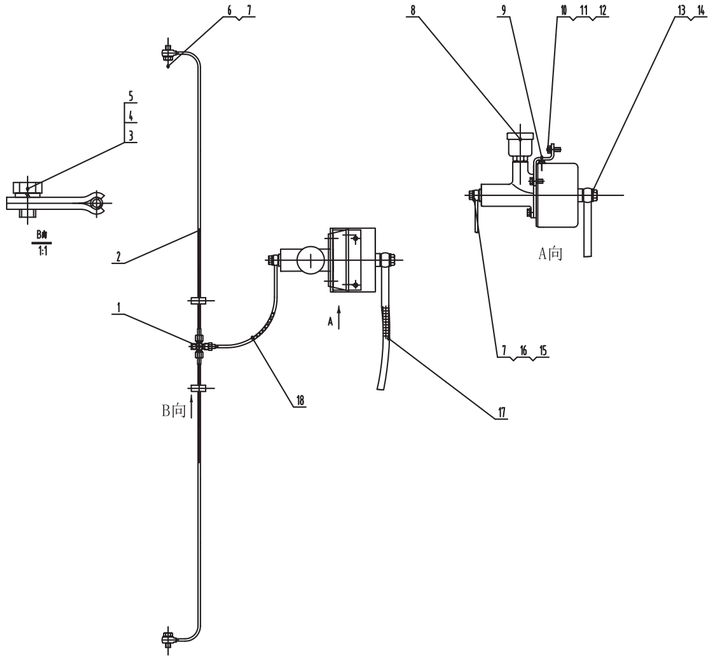

No.	PDM	Parts No.	Spec.	Qty.	Chinese Name	English Name	No.	PDM	Parts No.	Spec.	Qty.	Chinese Name	English Name
1	02A0001	408020		1	接头	Connector							
2	17D0337			2	铜管	Tube							
3	82A0001	408026		2	管夹	Clip							
4	00B0165	GB5783-86	M8X12	2	螺栓	Bolt							
5	06B0027	GB93-87	8	2	垫圈	Spacer							
6	03A0015	408101		2	接头	Connector							
7	55A0028	408115		5	垫圈	Spacer							
8	55C0062	XM20L			空气加力泵	Booster							
9	22A0036			1	板	Plate							
10	00B0028	GB5783-86	M10X25	4	螺栓	Bolt							
11	06B0003	GB93-87	10	4	垫圈	Spacer							
12	06B0004	GB97.1-85	10	4	垫圈	Spacer							
13	01B0004	408207		1	螺栓	Bolt							
14	56A0006	408206		2	垫圈	Spacer							
15	00A0083	408314		1	管接头	Connector							
16	55A0029	408102		1	垫圈	Spacer							
17	04C0014			1	软管	Hose							
18	05C0071			1	软管	Hose							
19													

Copyright of Xiamen Machinery Co., Ltd. All rights Reserved.

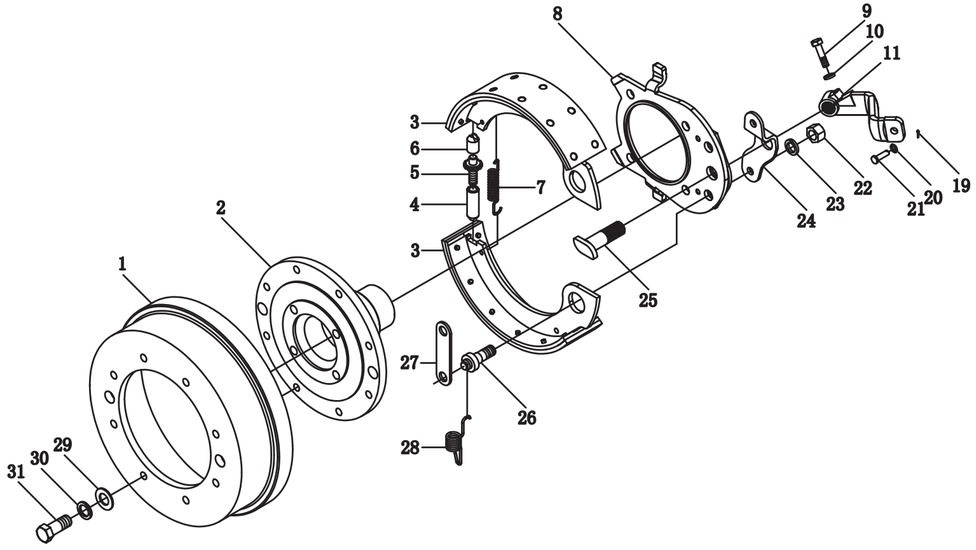

No.	PDM	Parts No.	Spec.	Qty.	Chinese Name	English Name	No.	PDM	Parts No.	Spec.	Qty.	Chinese Name	English Name
1	52A0099			1	制动鼓	Drum	23	06B0020	GB93–86	16	2	垫圈	Washer
2	58A0137			1	法兰	Flange	24	24A0005	409113		1	支架	Bracket
3	36C0004	409101–103		1	制动蹄总成	Blake shoe assembly	25	63A0001	409111		1	拉杆轴	Shaft of pull rod
4	54A0022	409106		1	螺杆套	Screw sleeve	26	05B0005	409115		2	夹紧螺杆	Clamping screnr
5	05B0004	409105		1	螺杆	Screw	27	55A0027	409117		1	垫板	Filler plate
6	67A0006	409104		1	杆头套	Cap	28	27B0006	409116		2	弹簧	Spring
7	27B0005	409107		1	弹簧	Spring	29	06B0012	GB97.1–85	12	8	垫圈	Washer
8	11A0016	409112		1	底板	Bottom plate	30	06B0013	GB93–87	12	8	垫圈	Washer
9	00B0024	GB5783–86	M6×25	1	螺栓	Blot	31	00B0067	GB5786–86	M12×1.25×30	8	螺栓	Blot
10	06B0021	GB93–87		1	垫圈	Washer							
11	64A0303			1	拉杆	Pull rod							
12													
13													
14													
15													
16													
17													
18													
19	08B0012	GB91–86	3.2×16	1	开口销	Split pin							
20	06B0061	GB97.2–86	10	1	垫圈	Washer							
21	08B0011	GB882–86	A10×35	1	销轴	Pin							
22	03B0034	GB170–86	M16	2	螺母	Nut							

Copyright of Xiamen Machinery Co., Ltd. All rights Reserved.

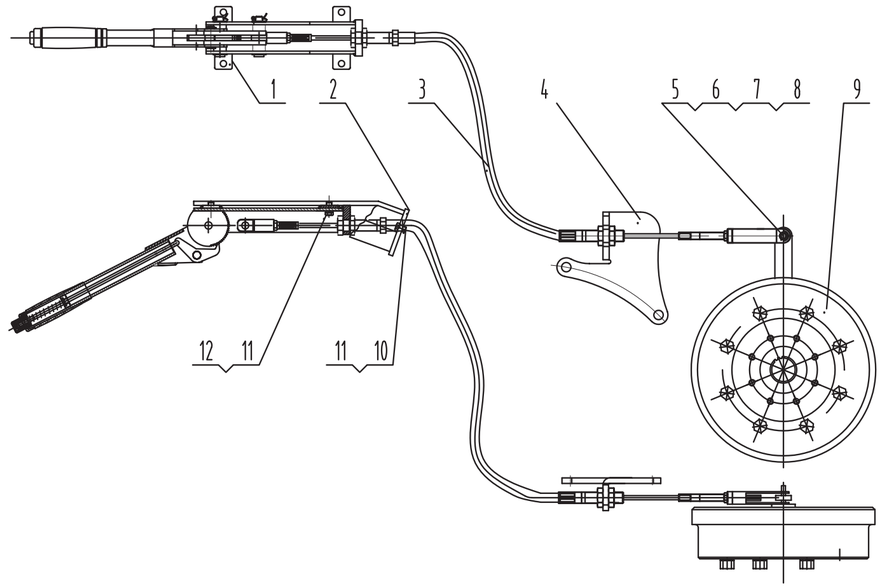

No.	PDM	Parts No.	Spec.	Qty.	Chinese Name	English Name	No.	PDM	Parts No.	Spec.	Qty.	Chinese Name	English Name
1	45C0099			1	操纵手柄总成	Handle							
2	00D0104			1	支架	brocket							
3	61C0170			1	软轴	Cable							
4	27A2707			1	支架	brocket							
5	08B0010	GB882–86	A10X35	1	销轴	Pin							
6	08B0012	GB91–86		1	开口销	Pin							
7	06B0061	GB93–87	10	1	垫圈	Washer							
8	74A0001			1	叉	Yoke							
9	55C0066			1	制动器	Pliers							
10	00B0017		M8X20	3	螺栓	Blot							
11	06B0009		8	7	垫圈	Washer							
12	00B0038		M8X16	4	螺栓	Blot							

Copyright of Xiamen Machinery Co., Ltd. All rights Reserved.

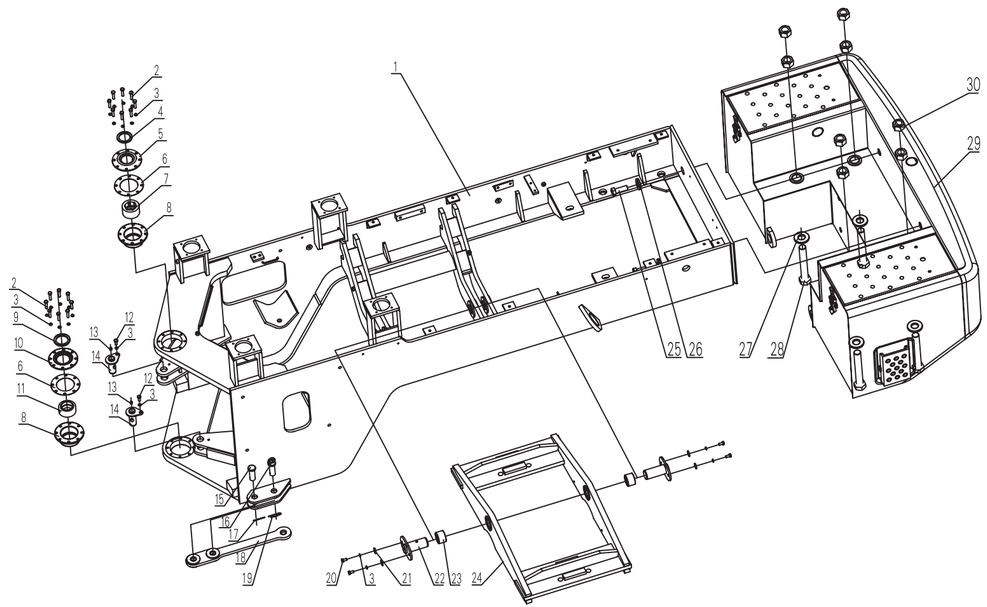

No.	PDM	Parts No.	Spec.	Qty.	Chinese Name	English Name	No.	PDM	Parts No.	Spec.	Qty.	Chinese Name	English Name
1	30D0315			1	后车架	Rear Frame	23	54A0148	201E0050		2	轴套	Sleeve
2	00B0172	GB5783–86	M10×45	16	螺栓	Bolt	24	00D0270	201E0052		1	支架	Bracket
3	06B0003	GB93–87	10	25	垫圈	Spring	25	01B0028	GB5785–86	M24×2×70	2	螺栓	Bolt
4	12B0043			1	骨架油封	Seal	26	52A0163	202H0010		2	圆盘	Round Plate
5	58A0136	132C0006		1	法兰	Flange	27	52A0162	202H0009		2	圆盘	Round Plate
6	56A0004	132C0007		2	调整垫	Spacer	28	01B0021	GB5785–86	M36×2×240	4	螺栓	Bolt
7	54A0151	131E0010		1	轴套	Sleeve	29	28C0119			1	配重	Counter Weight
8	52A0155	132C0004		2	圆座	Round Plate	30	03B0018	GB6171–86	M36×2	8	螺母	Nut
9	12B0042			1	骨架油封	Seal							
10	58A0135	132C0005		1	法兰	Flange							
11	35B0017	GB304–88	GE60ES	1	轴承	Bearing							
12	00B0028	GB5783–86	M10×25	2	螺栓	Bolt							
13	26B0010	JB/T7940.1	M10×1	5	油杯	Grease Nipple							
14	15D0099	131D0048		4	销轴	Shaft							
15	66A0013	131J0084		1	销	Pin							
16	15D0101	131J0085		1	销轴	Pin							
17	08B0044	GB91–86	4×55	1	销	Slit Pin							
18	12D0024			1	拉杆	Link							
19	57A0003	410248A		1	卡簧	Spring							
20	00B0028	GB5783–86	M10×25	4	螺栓	Bolt							
21	06B0049	GB96–85	10	4	垫圈	Washer							
22	15D0079	201E0054		2	销轴	Shaft							

Copyright of Xiamen Machinery Co., Ltd. All rights reserved.

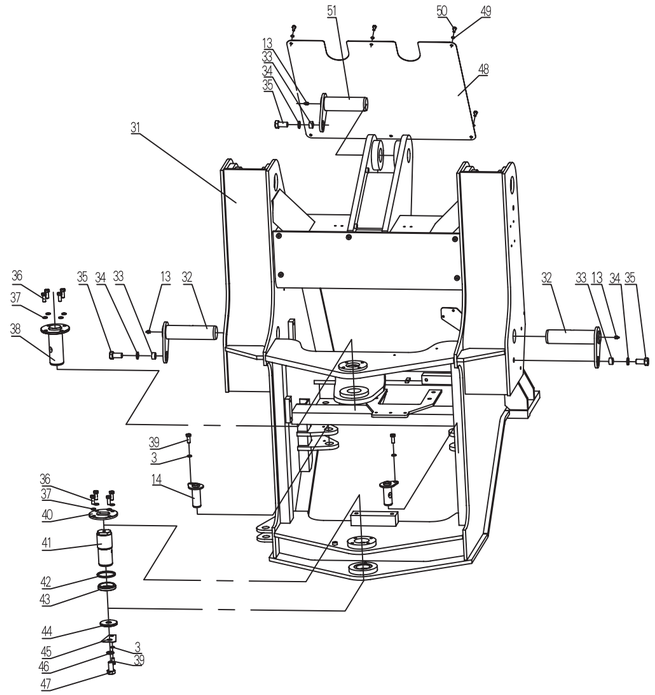

No.	PDM	Parts No.	Spec.	Qty.	Chinese Name	English Name	No.	PDM	Parts No.	Spec.	Qty.	Chinese Name	English Name
31	30D0314			1	前车架	Front Frame							
32	15D0100	132C0300		2	销轴	Shaft							
33	54A0160			3	隔离套	Sleeve							
34	06B0028	GB96–85	16	3	垫圈	Washer							
35	00B0083	GB5783–86	M16×40	3	螺栓	Bolt							
36	00B0031	GB5783–86	M12×30	8	螺栓	Bolt							
37	06B0013	GB93–87	12	8	垫圈	Washer							
38	15D0098	132C0400		1	销轴	Shaft							
39	00B0029	GB5783–86	M10×20	3	螺栓	Bolt							
40	52A0166	132C0002		1	圆盘	Round Plate							
41	60A0093	132C0003		1	销轴	Shaft							
42	17B0037	131E0012		1	橡胶圈	Seal							
43	54A0147	131E0008		1	轴套	Sleeve							
44	52A0165	131E0006		1	圆盘	Round Plate							
45	10A0157	131E0007		1	板	Plate							
46	06B0001	GB93–87		1	垫圈	Washer							
47	00B0001	GB5783–86	M20×40	1	螺栓	Bolt							
48	10A0160	132C0001		1	板	Plate							
49	06B0009	GB93–87	8	6	垫圈	Washer							
50	00B0038	GB5783–86	M8×16	6	螺栓	Bolt							
51	15D0097	132C0200		1	销轴	Shaftt							

Copyright of Xiamen Machinery Co., Ltd. All rights reserved.

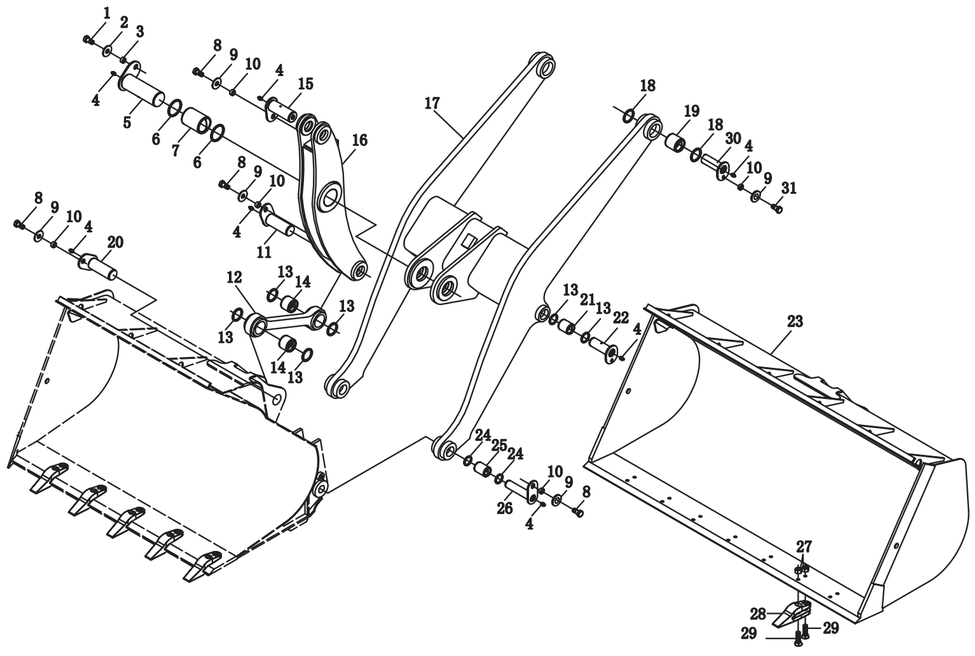

No.	PDM	Parts No.	Spec.	Qty.	Chinese Name	English Name	No.	PDM	Parts No.	Spec.	Qty.	Chinese Name	English Name
1	00B0173	GB5783-86	M20×45	1	螺栓	Bolt	23	43C0960			1	铲斗	Bucket
2	06B0016	GB96-85	20	1	垫圈	Washer	24	11B0054			4	骨架油封	seal
3	54A0051	5F110004		1	隔离套	Sleeve	25	54A0144			2	动臂下轴套	Sleeve
4	26B0010	JB/T7940.1-1995		10	油杯	Grease nipple	26	15D0094			2	铲斗下销轴	Pin
5	15D0092			1	摇臂中销轴	Pin	27	03B0015	GB6170-86	M20	14	螺母	Nut
6	12B0039			2	骨架油封	Seal	28	72A0051			7	斗齿	Tooth
7	54A0146			1	摇臂中轴套	Sleeve	29	02B0031	GB10-88	M20×85	14	螺栓	Bolt
8	00B0083	GB5783-86	M16×40	7	螺栓	Bolt	30	15D0096			2	动臂上销轴	Pin
9	06B0028	GB96-85	16	9	垫圈	Nut	31	00B0012	GB5783-86	M16X30	2	螺栓	Bolt
10	54A0160			9	隔离套	Sleeve							
11	15D0091			1	摇臂下销轴	Pin							
12	12D0023			1	拉杆	Link							
13	11B0052			8	骨架油封	Seal							
14	54A0145			2	拉杆轴套	Sleeve							
15	15D0091			1	摇臂上销轴	Pin							
16	21D0050			1	摇臂	Lever							
17	21D0051			1	动臂	Arm							
18	11B0055			4	骨架油封	Seal							
19	54A0140			2	动臂上轴套	Sleeve							
20	15D0093			1	铲斗上销轴	Pin							
21	54A0143			2	动臂缸铰孔轴套	Sleeve							
22	15D0095			2	动臂缸铰孔销轴	Pin							

Copyright of Xiamen Machinery Co., Ltd. All rights Reserved.

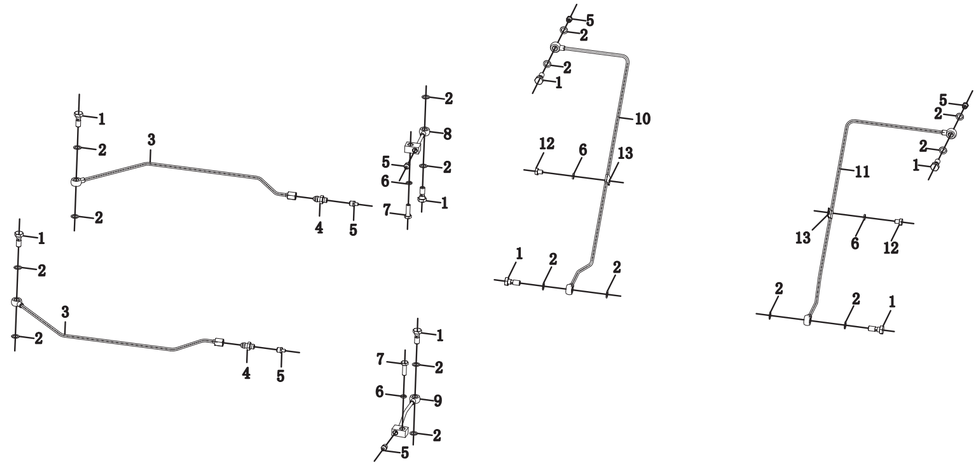

No.	PDM	Parts No.	Spec.	Qty.	Chinese Name	English Name	No.	PDM	Parts No.	Spec.	Qty.	Chinese Name	English Name
1	02B0011	410023A		8	螺栓	Bolt							
2	06B0078	406213		16	垫圈	Washer							
3	17D1787			2	钢管	Tube							
4	28B0037	GB5625.2–85	6	2	接头	Connector							
5	26B0010	JB/T7940.1–1995	M10×1	6	油杯	Grease nipple							
6	06B0009	GB93–87	8	4	垫圈	Washer							
7	00B0018	GB5783–86	M8X25	2	螺栓	Bolt							
8	17D0339			1	管	Tube							
9	17D0331			1	管	Tube							
10	17D0333			1	管	Tube							
11	17D0332			1	管	Tube							
12	00B0070	GB5783–86	M8X10	2	螺栓	Bolt							
13	82A0001	408026		2	管夹	Clamp							

Copyright of Xiamen Machinery Co., Ltd. All rights Reserved.

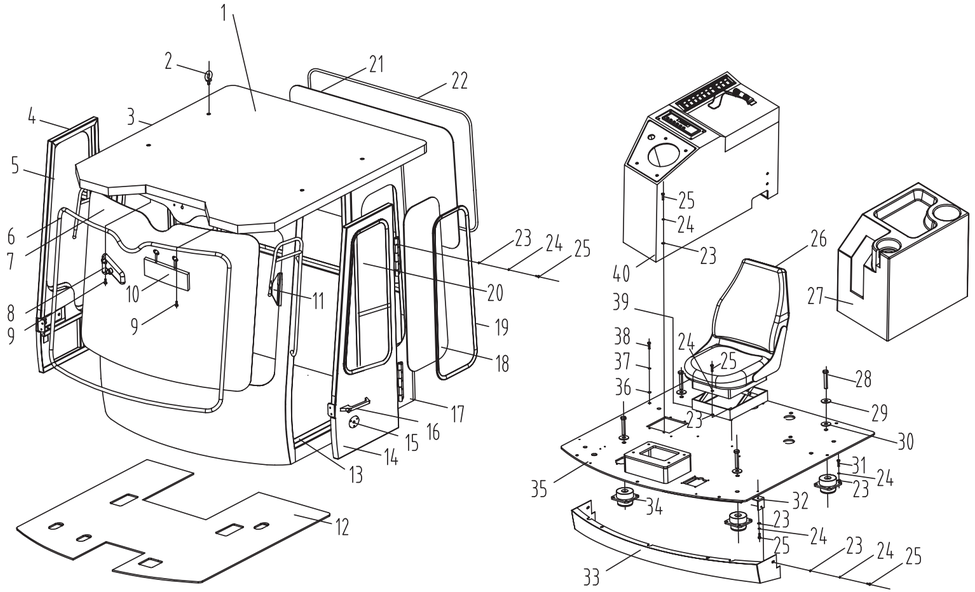

No.	PDM	Parts No.	Spec.	Qty.	Chinese Name	English Name	No.	PDM	Parts No.	Spec.	Qty.	Chinese Name	English Name
1	47C0390			1	驾驶室总成	Cab assem	23	06B0009	GB93-87	8	48	垫圈	Washer
2	04B0009	GB825-88	M12	4	螺钉	Screw	24	06B0027	GB97.1-85	8	48	垫圈	Washer
3	49D0069			1	顶盖总成		25	00B0038	GB5783-86	M8X16	35	螺栓	Bolt
4	47C0371			1	门（右）	Door	26	47C0204		普通	1	座椅	Seat Assem
5	47C0397			1	右门铝窗	window		47C0765		格拉莫	1	司机座椅	Seat Assem
6	22B0087	Q1664	L=4.15M	1	玻璃框条	Seal	27	47C1041			1	手刹箱	box
7	51B0040			1	前挡风玻璃	Glass	28	01B0177	GB5783-86	M16x100(镀锌)	4	螺栓	Bolt
8	47C0147	XG-2		1	内后视镜	Rear View Mirror	29	06B0020	GB93-87	16	4	垫圈	Washer
9	04B0116	GB819-85	M5X12	6	螺钉	Screw	30	06B0028	GB96-85	16	4	垫圈	Washer
10	47C1057			1	遮阳帘	lightproof Assem	31	00B0073	GB5783-86	M8X30	16	螺栓	Bolt
11	47C0024	EQ-142		2	后视镜	Rear View Mirror	32	21A0209			2	板	plate
12	21B0311			1	地板垫	spacer	33	47D0021			1	围板	Boarding
13	22B0052	F002	L=3.5M	2	骨架密封条	Seal	34	47C0203			4	减振垫	Cushion
14	47C0380			1	门(左)	Door	35	47C0724			1	底板总成	
15	47C1033			2	碰锁组件	Lock Group	36	06B0225	GB96-85	14	7	垫圈	Washer
16	47C0044	NBB503		2	门锁	Door Lock	37	06B0005	GB93-87	14	7	垫圈	Washer
17	23D0102			1	驾驶室壳体	Cab	38	01B0065	GB5782-96	M14X55	7	螺栓	Bolt
18	51B0141			2	挡风玻璃	Glass	39	00D2664			1	座椅支架	Bracket
19	22B0088	Q1664	L=2.59M	2	玻璃框条	Seal	40	47C1041			1	先导电器箱	box
20	47C0395			1	左门铝窗	window							
21	51B0042			1	挡风玻璃	Glass							
22	22B0089	Q1664	L=3.64M	1	玻璃框条	Seal							

Copyright of Xiamen Machinery Co., Ltd. All rights Reserved.

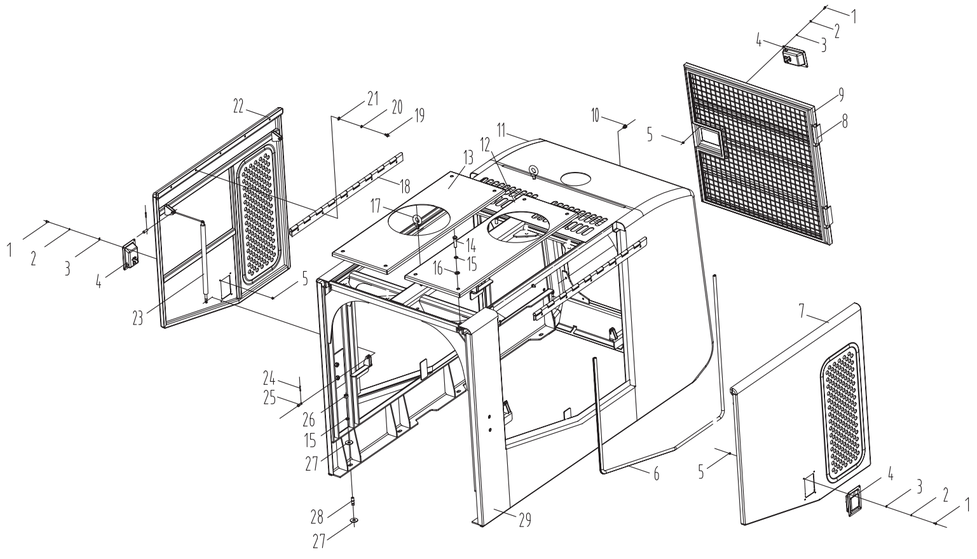

No.	PDM	Parts No.	Spec.	Qty.	Chinese Name	English Name	No.	PDM	Parts No.	Spec.	Qty.	Chinese Name	English Name
1	04B0062	GB818–85	M5X12	12	螺钉	Screw	21	06B0027	GB97.1–85	8	10	垫圈	Washer
2	06B0054	GB93–87	5	12	垫圈	Washer	22	42D0107			1	右门	Right Door
3	06B0064	GB97.1–85	5	12	垫圈	Washer	23	48C0527			4	气弹簧	Spring
4	48C0060			3	锁	Lock	24	08B0031	GB91–86	3.2×20	8	开口销	Pin
5	03B0072	GB6170–86	M5	12	螺母	Nut	25	08B0041	GB882–86	B8×26	8	销轴	Pin
6	22B0173			2	密封条	Rubber	26	03B0010	GB6170–86	M12	8	螺母	Nut
7	42D0106			1	左门	Left Door	27	06B0101	GB96–85	12	8	垫圈	Washer
8	25C0028			2	铰链	Hinge	28	05B0061	GB897–88	M12×30	8	螺柱	Stud
9	44D0117			1	后栅格	Back Door	29	48C0310		YC6108G	1	机罩总成	Hood
10	21B0282			2	减震垫	Absorber		48C0423		康明斯	1	机罩总成	Hood
11	44D0151			1	机罩框架	Hood Frame							
12	45D0195		YC6108G(左)	1	锁板	plate							
13	45D0194		YC6108G(右)	1	锁板	plate							
12	45D0195		康明斯(左)	1	锁板	plate							
13	45D0195		康明斯(右)	1	锁板	plate							
14	00B0032	GB5783–86	M12X50	8	螺栓	Bolt							
15	06B0013	GB93–87	12	8	垫圈	Washer							
16	06B0012	GB97.1–85	12	8	垫圈	Washer							
17	04B0009	GB825–88	M12	2	螺钉	Screw							
18	25C0024			2	铰链	Hinge							
19	00B0165	GB5783–86	M8X12	10	螺栓	Bolt							
20	06B0009	GB93–87	8	10	垫圈	Washer							

Copyright of Xiamen Machinery Co., Ltd. All rights Reserved.

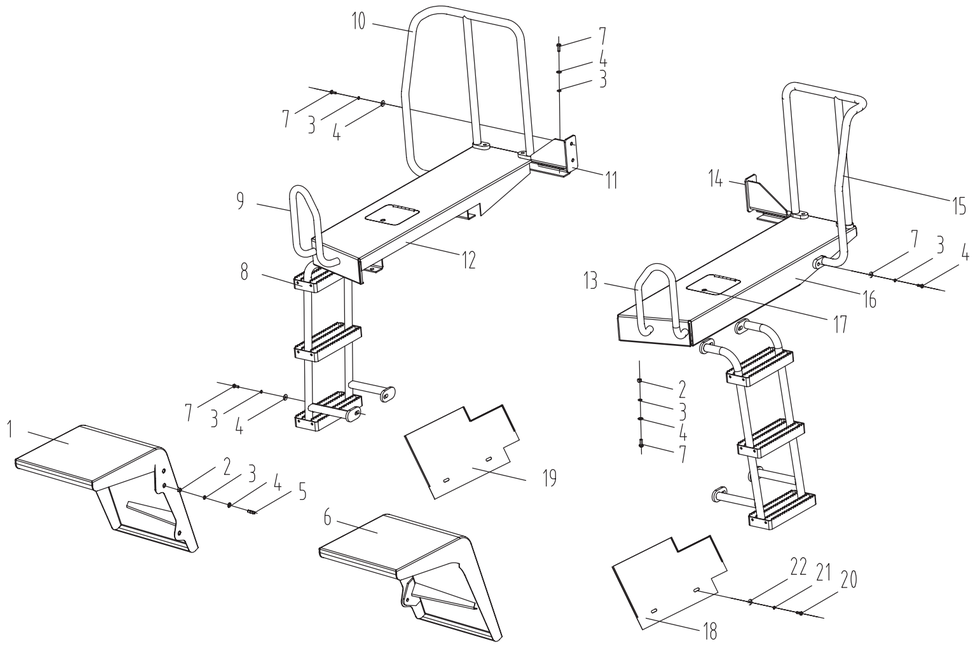

No.	PDM	Parts No.	Spec.	Qty.	Chinese Name	English Name	No.	PDM	Parts No.	Spec.	Qty.	Chinese Name	English Name
1	40D0105			1	右前挡泥板	Front Fender							
2	03B0010	GB6170–86	M12	14	螺母	Nut							
3	06B0013	GB97.1–85	12	40	垫圈	LockWasher							
4	06B0120	GB93–87	12	40	垫圈	Washer							
5	05B0061	GB897–88	M12×30	6	螺柱	Stud							
6	40D0104			1	左前挡泥板	Front Fender							
7	01B0008	GB5782–86	M12×45	34	螺栓	Bolt							
8	41D0140			2	蹬梯	Ladder							
9	41D0133			1	扶手	Handhold							
10	41D0129			1	扶手	Handhold							
11	00D2154			1	支架	bracket							
12	47C0817			1	翼架总成	Rear Fenfer							
13	41D0134			1	扶手	Handhold							
14	00D2155			1	支架	bracket							
15	41D0130			1	扶手	Handhold							
16	47C0818			1	翼架总成	Rear Fenfer							
17	47C0190			2	锁	Lock							
18	20A1485			1	板	Plate							
19	20A1486			1	板	Plate							
20	00B0017	GB5783–86	M8×20	4	螺栓	Bolt							
21	06B0009	GB93–87	8	4	垫圈	LockWasher							
22	06B0098	GB96–87	8	4	垫圈	Washer							

Copyright of Xiamen Machinery Co., Ltd. All rights Reserved.

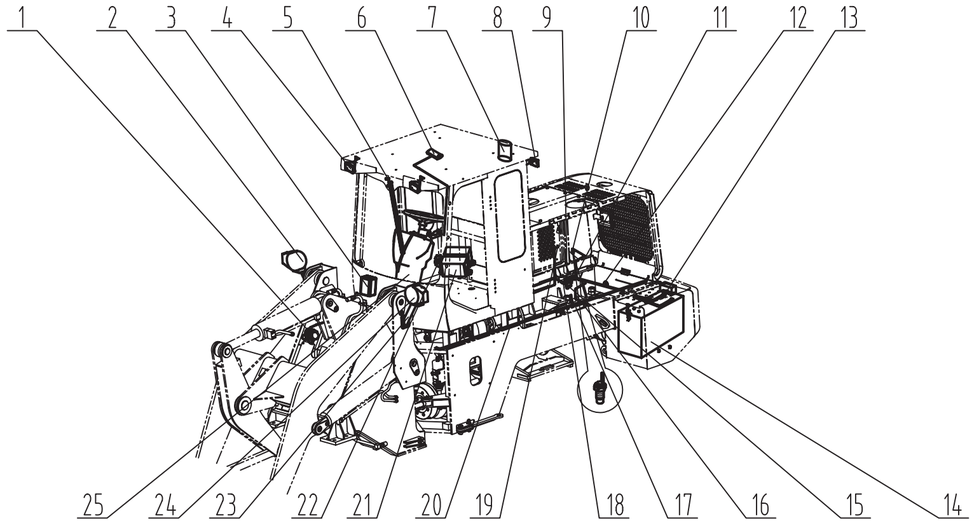

No.	PDM	Parts No.	Spec.	Qty.	Chinese Name	English Name	No.	PDM	Parts No.	Spec.	Qty.	Chinese Name	English Name
1	47B0050	AT-1053	24V	1	电喇叭	Horn	21	46C0907			1	保险丝电器盒总成	Fuse Box
2	42B0243	H4 24V 75W/70W	24V	1	右灯总成	Lamp As.		46C0908			1	继电器电器盒总成	Relay Box
3	47C0002	5F142040	24V	1	洗涤器	Washer	22	41B0014			1	继电器	Relay
4	42B0259	WD135×80	24V	2	工作灯	Working Lamp	23	00D2243			1	左灯架	
5	46C0931	ZD2530	24V，50W	1	刮水器	Wiper		00D2244			1	右灯架	
6	42B0005	NZ1-3	24V	1	长型顶灯	Cab Lamp	24	42B0242	H4 75W/70W	24V	1	左灯总成	Lamp As.
7	42B0125	LTD153	24V	1	旋转警示灯	Rotating Signal Beacon		42B0243	H4 75W/70W	24V	1	右灯总成	Lamp As.
8	42B0259	WD135×80	24V	2	后照灯	Rear Working Lamp	25	29C0193		24V	1	仪表盘总成	Panel As
9	43B0104		QVR50	1	电源负线	Wire As.		29C0194			1	组合仪表总成	Meter As
10	40B0001	WG210	Z3/8	1	温度传感器	Sensor							
11	43B0065		QVR50	1	搭铁线	Wire As.							
12	43B0103		QVR50	1	电源连线	Wire As.							
13	42B0001 42B0053	Z276X85	24V	1 1	后三色灯 （左右各一）	Rear Lamp As.							
14	47B0180	6QW120T	12V	2	蓄电池	Battery							
15	44B0023	JK862		1	电源开关	Switch							
16	09C0633			1	动力机线束	Harness							
17	43B0102		QVR50	1	电源正线	Wire As.							
18	40B0002	WG210A	R1/2	1	温度传感器	Sensor							
19	05C0749			1	压力表连接管	Hose As.							
20	09C0619			1	主线束	Harness							

Copyright of Xiamen Machinery Co., Ltd. All rights Reserved.

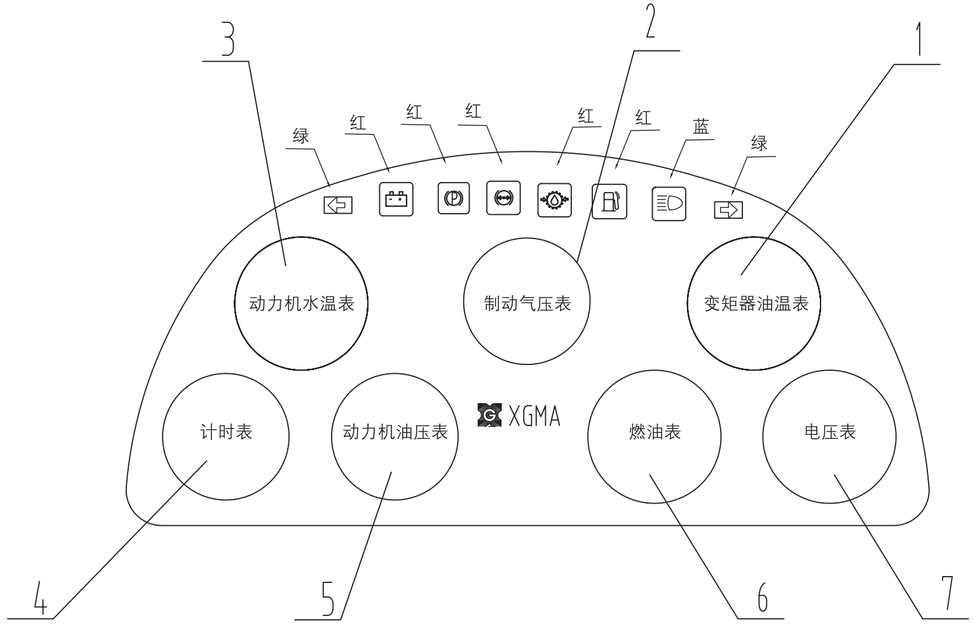

No.	PDM	Parts No.	Spec.	Qty.	Chinese Name	English Name	No.	PDM	Parts No.	Spec.	Qty.	Chinese Name	English Name
1	45B0048			1	油温表	Oil Temp.							
2	45B0022			1	气压表	Air Pressure							
3	45B0024			1	水温表	Coolant Temp.							
4	45B0026			1	计时表	Service Meter							
5	45B0025			1	油压表	Oil Pressure							
6	45B0140			1	燃油表	Fuel Meter							
7	45B0047			1	电压表	Voltage Meter							

Copyright of Xiamen Machinery Co., Ltd. All rights Reserved.

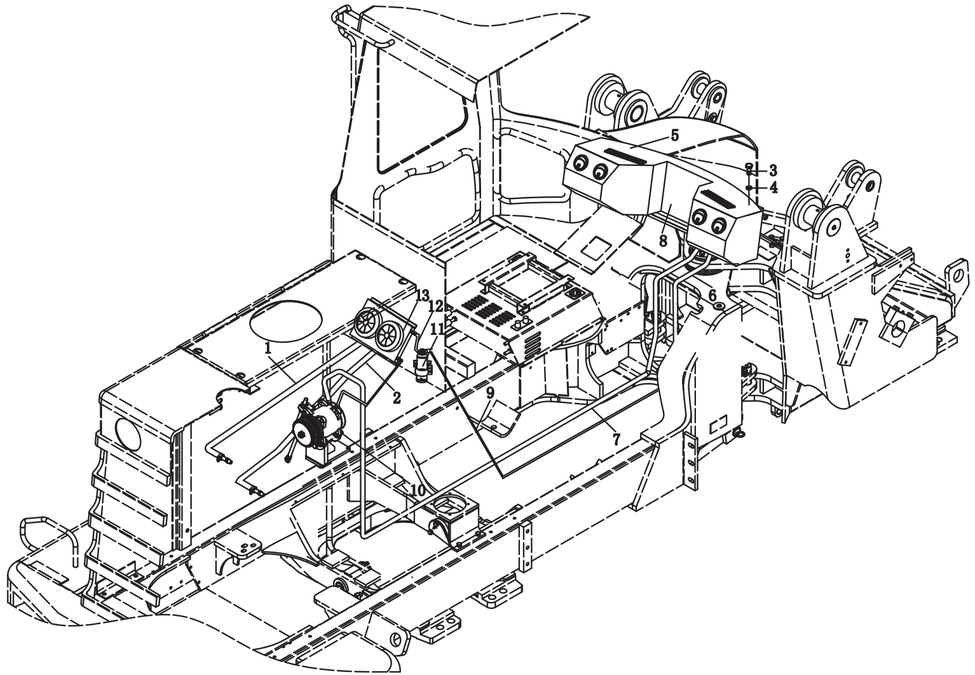

No.	PDM	Parts No.	Spec.	Qty.	Chinese Name	English Name	No.	PDM	Parts No.	Spec.	Qty.	Chinese Name	English Name
1	56C0482				夹布胶管	Hose							
2	56C0482				夹布胶管	Hose							
3	00B0017	GB5783–86	M8×20	6	螺栓	Bolt							
4	06B0009	GB93–87	8	8	垫圈	Washer							
5	56C0509			1	蒸发器总成	Hose							
6	56C0456			1	低压软管	Hose							
7	56C0457			1	低压软管	Warm As.							
8	56C0086			1	暖风蒸发器								
9	56C0458			1	高压软管	Hose							
10	56C0130			1	压缩机	Compressor							
11	56C0120			1	储液罐	Reservoir							
12	56C0459			1	高压胶管	Hose							
13	56C0113			1	冷凝器	Condenser							

Copyright of Xiamen Machinery Co., Ltd. All rights Reserved.