RUTHZIL TRATOR COMERCIAL DE PEÇAS LTDA 11 97083-6812 ROLANDO

GEHL®

Model Z45

Form No.
50940085
Revision B
Dec. 2012

Compact Excavator



Parts Manual

© 2012 • All Rights Reserved • Printed in USA

INTRODUCTION

General

- MANITOU AMERICAS, INC. reserves the right to make changes or improvements in the design or construction of any part of the machine without incurring the obligation to install such changes on any previously delivered machines.
- This parts manual should not be used as a technical data reference; it uses simplified illustrations and does not detail servicing procedures.

Parts Ordering Information

- When ordering service parts, specify the correct part number, full description and quantity required, as well as the machine and engine model and serial numbers. For your safety and continued proper operation, use only genuine GEHL service parts.
- “Right”, “left”, “front” and “back” are determined from a position sitting on the operator’s seat and facing forward, and the excavator “house” rotated so that the blade is also facing forward.

Torque Charts

Standard attaching hardware torque values are provided on the inside back cover, and some torque values may be shown in illustrations. Metric torque values are shown in Newton-meters, and are converted to foot-pounds by multiplying by 0.738.

Illustrations and Parts Lists

- Not all parts shown in the illustrations may be included in the parts listings; some are not serviced separately or are not included on engines sold in all areas.
- Ref. Nos. shown in the parts listings without part numbers are shown for reference purposes only and are not available for purchase.
- Boxes or brackets may be used in some illustrations to indicate assemblies (part groupings), or in some cases to highlight different versions of individual parts or assemblies.
- Text references may be present on some illustrations to provide additional information.
- Some illustrations will contain circled letters or a circled combination of letters and numbers in addition to the regular number callouts. These special callouts may be used to identify hydraulic port locations which are marked on components, or to identify the two ends of a hose, tube, or other part that is shown split in the illustration. They may also be used to indicate a common reference point when different versions of components are shown on the illustration.

Serial Number Locations and Information

- Machine Serial Plate - Located at the lower right front of the machine on the turning frame. There are four items shown on the plate:
  1) Model = machine model number
  2) Machine No. = machine serial number
  3) Engine No. = engine serial number
  4) Product Identification Number = a sequence starting with YMR plus the machine model number, and ending with the five digit machine serial number. The additional characters in-between provide information about specific machine configuration.

NOTE: *The engine serial number is shown on this plate for ease of access. It is also shown on a serial plate located on the engine cylinder head cover.*

- ROPS /FOPS Serial Plate - Located on a crossmember on the inside of the canopy roof, if equipped. There are four items shown on the plate:
  1) Machine Model = models that this structure is rated for, may be more than one model
  2) ROPS/FOPS part number
  3) ROPS/FOPS Serial Number
  4) Max. Gross Machine Weight

- TOPS/FOPS Serial Plate - Located inside the cabin on a support post behind the operator seat at the left side, if equipped. There are four items shown on the plate:
  1) TOPS/FOPS part number
  2) TOPS/FOPS Serial Number
  3) Machine Model = models that this structure is rated for, may be more than one model
  4) Max. Gross Machine Weight

NOTE: *ROPS = Roll Over Protective Structure, TOPS = Tip Over Protective Structure, FOPS = Falling Object Protective Structure*

Reference Number Sequencing in Parts Lists

NOTE: *Reference numbers in the illustrations and parts listings may include sequencing variations of hyphens (-) and/or letters.*

FOR EXAMPLE (Ref. Nos.):
5 = Original version/configuration of a part or assembly
5-1, 5-2, etc. = The hyphen (-) indicates an updated version/configuration of Ref. No. 5, and should have an associated serial number. The highest numbered version is the latest. If a hyphenated version is shown in the parts listing, but only the non-hyphenated version is shown in the illustration, the versions are visually similar. Multiple versions may be shown in the illustration, to identify changes.
5A, 5B, etc. = These parts do not replace Ref. Nos. 5 or 5-1, they are added components and may have an associated serial number.
5-1A, 5-1B, etc. = These are added components and may have an associated serial number.

NOTE: *There may be a Ref. No. 5A without an associated Ref. No. 5 in the list. In that example, Ref. No. 5A is a newly added part and may have an associated serial number and also an additional note or remark.*

INTRODUCTION

Unless otherwise specified, all cap screws, nuts, and bolts are Grade 8.8, cadmium or zinc plated.

NOTE: *The following abbreviations may be used herein:*

ASSD ..... Assembled
ASSY ..... Assembly
AR..... As Required
CB ..... Carriage Bolt
CP ..... Cotter Pin
CS ..... Cap Screw (Hexagon Head)
CYL ..... Cylinder
DIA ..... Diameter
FHCS ..... Flat Head Cap Screw
FOPS..... Falling Object Protective Structure
GR..... Grade
HB..... Hex Bolt
HLN ..... Hex Lock Nut
HN..... Hex Nut
HP ..... High Pressure
HYD..... Hydraulic
INS..... Insert
LN..... Lock Nut
LT ..... Left
LW ..... Lock Washer
M..... Meter or Meters
MM/mm..... Millimeter
N/A ..... Not Available, Not Applicable
NPT..... National Pipe Thread
OS ..... Oversized
ROPS ..... Roll Over Protective Structure
RT ..... Right
SHCS ..... Socket Head Cap Screw
SLTD..... Slotted
SN ..... Serial Number or Slotted Nut
SQ ..... Square
TOPS..... Tip Over Protective Structure
US ..... Undersized
W/ ..... With
W/O..... Without

Gehl® is a registered trademark of Manitou Americas, Inc.

TABLE OF CONTENTS

Introduction i
Compact Excavator 1
Special Tools, Paint 1
Figure Index (1) - Main Parts 2
Figure Index (2) - Hydraulic Section 3
Fig. 1 - Label (Canopy) 4
Fig. 2 - Label (Cabin) 6
Fig. 5 - Safety Label (Canopy) 8
Fig. 6 - Safety Label (Cabin) 10
Fig. 7 - Silencer & Air Cleaner 12
Fig. 8 - Accelerator 14
Fig. 9 - Engine Mount 16
Fig. 10 - Radiator & Mount 18
Fig. 11 - Fuel Tank 20
Fig. 12 - Fuel Line 22
Fig. 13 - Battery 24
Fig. 14 - Electric Part (Around Engine) 26
Fig. 15 - Electric Part (Around Frame) 28
Fig. 16 - Electric Part (Equipment) 30
Fig. 17 - Electric Part (Starting Switch) 32
Fig. 18 - Electric Part (Quick Coupler : Switch Box) 34
Fig. 19 - Electric Part (Work Lamp) 36
Fig. 21 - Travel Alarm 38
Fig. 22 - Window Washer 40
Fig. 23 - Heater 42
Fig. 24 - Air Conditioner (Electric Part) 44
Fig. 25 - Air Conditioner (Heater Hose) 46
Fig. 26 - Air Conditioner (Engine Related) 48
Fig. 27 - Air Conditioner (Cabin Related) 50
Fig. 28 - Air Conditioner (Condenser Related) 52
Fig. 29 - Air Conditioner (Piping) 54
Fig. 30 - Sprocket 56
Fig. 31 - Idler & Adjust 58
Fig. 32 - Track Roller 60
Fig. 33 - Carrier Roller 62
Fig. 34 - Crawler 64
Fig. 35 - Valve Plate 66
Fig. 36 - Control Equipment (Travel Lever) 68
Fig. 37 - Control Equipment (Swing Pedal) 70
Fig. 38 - Control Equipment (Low-High Pedal) 72
Fig. 39 - Control Equipment (Lock Lever & Stand : Left) 74
Fig. 40 - Control Equipment (Lock Lever & Stand : Right) 76
Fig. 41 - Control Equipment (Blade Lever) 78
Fig. 42 - Control Equipment (P.T.O.) 80
Fig. 43 - Arm Rest 82
Fig. 44 - Travel Frame 84
Fig. 45 - Turning Frame 86
Fig. 46 - Greasing 88
Fig. 47 - Turning Bearing 90
Fig. 48 - Frame Guard 92
Fig. 50 - Cover (Turning Frame) 94
Fig. 51 - Cover (Travel Frame) 96
Fig. 52 - Cover (Bonnet) 98
Fig. 53 - Step (1) 100
Fig. 54 - Step (2) 102
Fig. 55 - Instrument Panel 104
Seat 106
Fig. 56 - Seat Mount 108
Fig. 57 - Seat Mount Cover & Hand Hold 110
Fig. 58 - Seat Plate 112
Fig. 59 - Bonnet (Rear) 114
Fig. 61 - Bonnet (Front) 116
Fig. 62 - Bonnet (Left) 118
Fig. 64 - Bonnet (Right) 120
Fig. 66 - Canopy 122
Fig. 68 - Cabin (Body) 124
Fig. 69 - Cabin (Glass) 126
Fig. 70 - Cabin (Accessory) 128
Fig. 71 - Cabin (Electric Part) 130
Fig. 72 - Cabin Door (Front) 132
Fig. 73 - Cabin Door (Rear) 134
Fig. 74 - Cabin (Cover) 136
Fig. 75 - Cabin (Fitting) 138
Fig. 76 - Rearview Mirror 140
Fig. 77 - Hyd. Oil Pump & Joint 142
Fig. 78 - Boom Cylinder 144
Fig. 79 - Arm Cylinder 146

TABLE OF CONTENTS

Fig. 80 - Bucket Cylinder 148
Fig. 81 - Swing Cylinder.....150
Fig. 82 - Blade Cylinder 152
Fig. 83 - Hitch Cylinder (Quick Coupler) 154
Fig. 84 - Travel Motor 156
Fig. 85 - Turning Motor.....158
Fig. 86 - Swivel Joint.....160
Fig. 87 - Control Valve (1/7) 162
Fig. 88 - Control Valve (2/7) 164
Fig. 89 - Control Valve (3/7) 166
Fig. 90 - Control Valve (4/7) 168
Fig. 91 - Control Valve (5/7) 170
Fig. 92 - Control Valve (6/7) 172
Fig. 93 - Control Valve (7/7) 174
Fig. 94 - 2-Way Valve 176
Fig. 95 - Remote Control Valve.....178
Fig. 96 - Hyd. Oil Tank.....180
Fig. 97 - Hyd. Oil Piping (Fitting : Pump).....182
Fig. 98 - Hyd. Oil Piping (Fitting : Turning Motor).....184
Fig. 99 - Hyd. Oil Piping (Fitting : Control Valve) 186
Fig. 100 - Hyd. Oil Piping (Tank-Pump-Control Valve).....188
Fig. 101 - Hyd. Oil Piping (Valve-Turning Motor).....190
Fig. 102 - Hyd. Oil Piping (Valve-Swivel-Swing Cylinder).....192
Fig. 103 - Hyd. Oil Piping (Return)...194
Fig. 104 - Hyd. Oil Piping (P.T.O. : Turning Frame).....196
Fig. 105 - Hyd. Oil Piping (Control Valve-Frame End) 198
Fig. 106 - Hyd. Oil Piping (Truck Frame).....200
Fig. 107 - Hyd. Oil Piping (Boom) 202
Fig. 108 - Hyd. Oil Piping (P.T.O. : Boom-Arm).....204
Fig. 110 - Hyd. Oil Piping (Quick Coupler) 206
Fig. 112 - Control Piping (Pump-Valve-Return).....208
Fig. 113 - Control Piping (2-Way Valve : 1) 210
Fig. 114 - Control Piping (2-Way Valve : 2) 212
Fig. 115 - Control Piping (Valve-Blade Valve) 214
Fig. 116 - Control Piping (2-Way Valve : Fitting) 216
Fig. 117 - Accumulator 218
Fig. 118 - Boom Bracket.....220
Fig. 120 - Boom 222
Fig. 122 - Arm 224
Fig. 124 - Bucket Arm & Link 226
Fig. 126 - Quick Coupler 228
Fig. 128 - Blade 230
Hydraulic Quick-Connect Couplers...232
Index 235
Numerical Index 237
Torque Charts .....Inside Back Cover

Ref. No.	Part No.	Description	Qty.
1	184467	HYDRAULIC GAUGE KIT	1
2	50301126	TEST PORT R1/8K ADAPTER (used with test gauge kits)	1
3	184472	TEST GAUGE, 1000PSI	1
4	184473	TEST GAUGE, 6000PSI	1
5	184474	TEST GAUGE, 10,000PSI	1
6	184475	TEST HOSE, 120" (used with test gauge kits)	1
7	420-34912	ROD SEAL INSTALL TOOL, 3/4" X 1-1/4" DIAMETER SEALS	1
8	420-34913	ROD SEAL INSTALL TOOL, 1-1/2" X 2" DIAMETER SEALS	1
9	420-34914	ROD SEAL INSTALL TOOL, 2" X 3" DIAMETER SEALS	1
10	195348	SERVICE TOOL/FUEL INJECTOR PUMP TIMING KIT	1
11	272806	HYDRAULIC OIL ANALYSIS KIT (GEHL) (use with appropriate pump and tubing)	Set of 10
12	272809	ENGINE OIL ANALYSIS KIT (GEHL) (use with appropriate pump and tubing)	Set of 10
13	270811	FUEL ANALYSIS KIT (GEHL)	1
14	272812	COOLANT ANALYSIS KIT (GEHL) (use with appropriate pump and tubing)	Set of 10
15	272813	FIELD TEST COOLANT STRIP (low level visual analysis)	1
16	272814	OIL VACUUM PUMP (use with hydraulic oil and engine oil analysis kits)	1
17	272815	COOLANT VACUUM PUMP (use with coolant analysis kit)	1
18	272816	1/4” PLASTIC TUBING, 100’ (bulk roll, use with hydraulic oil, engine oil and coolant analysis kits)	1
19	167788	GEHL 4-PK QT EXCAVATOR CONSTRUCTION YELLOW	1
20	167754	GEHL 4-PK QT GUNMETAL GRAY	1
21	167789	GEHL 6-PK SPRAY EXCAVATOR CONSTRUCTION YELLOW, 12.8 OZ.	1
22	167755	GEHL 6-PK SPRAY GUNMETAL GRAY, 12.8 OZ.	1

Z45 - COMPACT EXCAVATOR
FIGURE INDEX (1) - MAIN PARTS

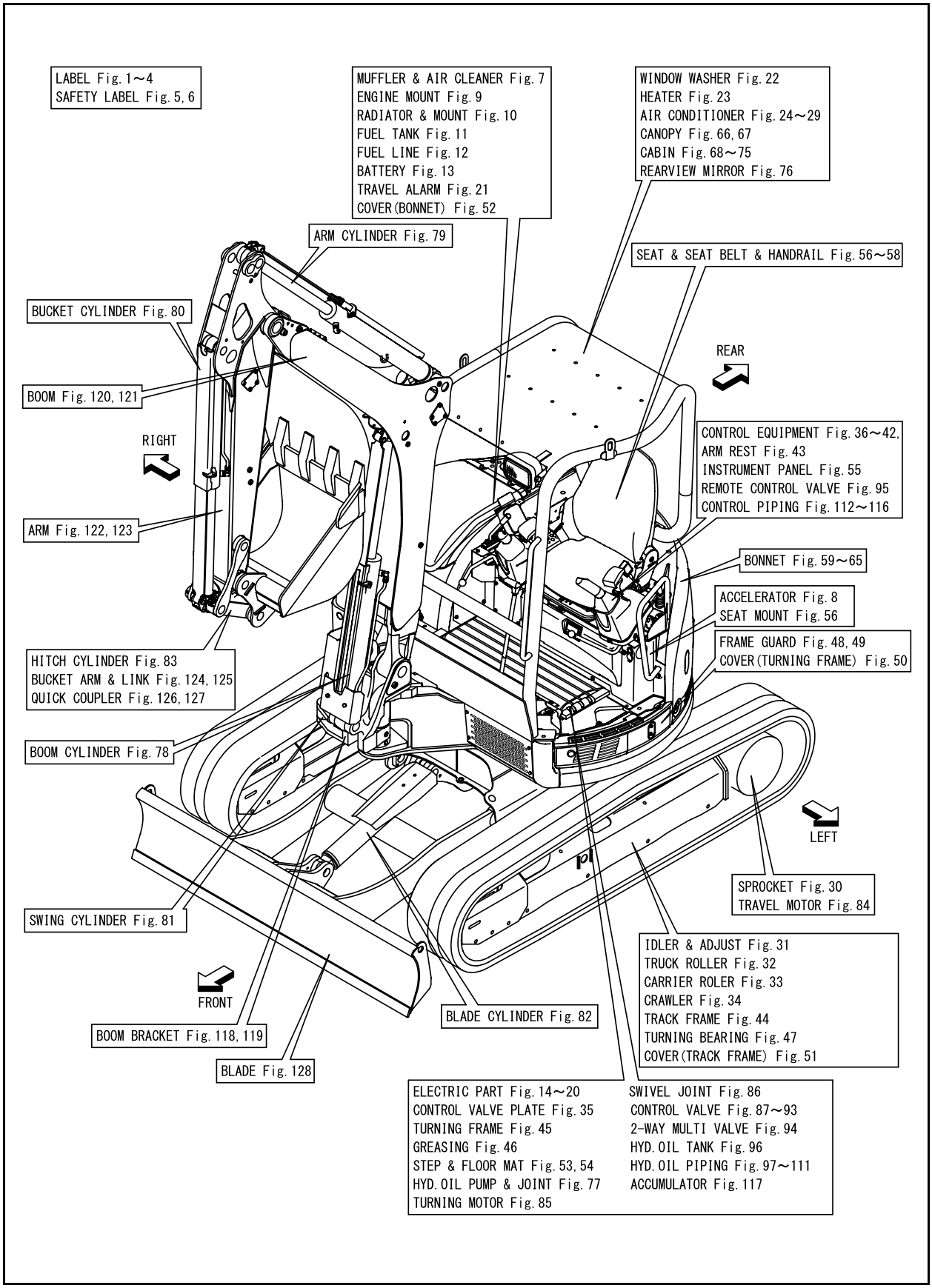

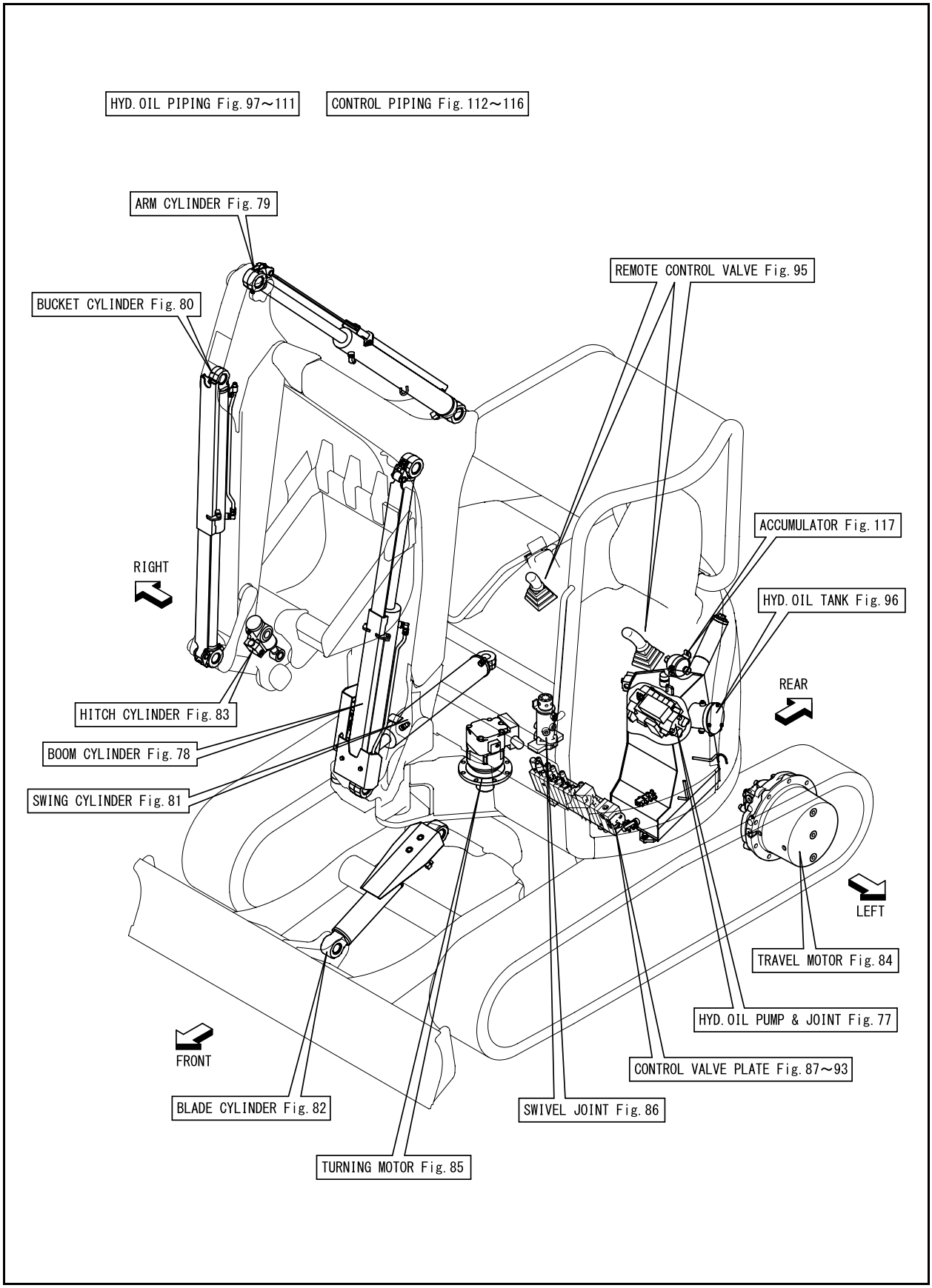
HYD.OIL PIPING Fig.97～111
CONTROL PIPING Fig.112～116
ARM CYLINDER Fig.79
BUCKET CYLINDER Fig.80
REMOTE CONTROL VALVE Fig.95
ACCUMULATOR Fig.117
RIGHT
HYD.OIL TANK Fig.96
REAR
HITCH CYLINDER Fig.83
BOOM CYLINDER Fig.78
SWING CYLINDER Fig.81
LEFT
TRAVEL MOTOR Fig.84
HYD.OIL PUMP & JOINT Fig.77
FRONT
CONTROL VALVE PLATE Fig.87～93
BLADE CYLINDER Fig.82
SWIVEL JOINT Fig.86
TURNING MOTOR Fig.85

Z45 - COMPACT EXCAVATOR
FIG. 1 - LABEL (CANOPY)

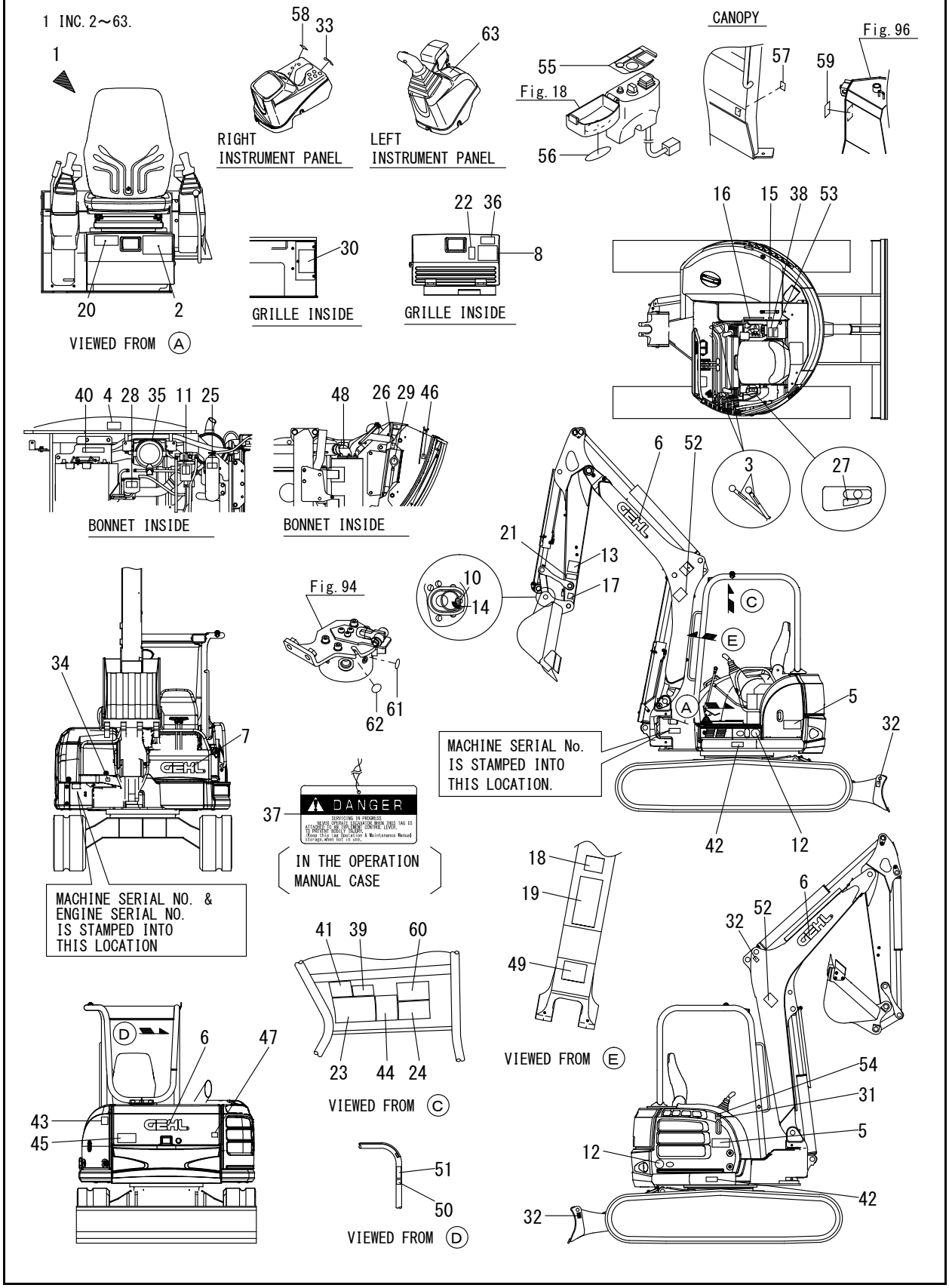

FIG. 1 - LABEL (CANOPY)

Ref. No.	Part No.	Description	Qty.
2	50281172	LABEL, SUPPORT US	2
3	50280917	LABEL,LOCK	2
4	50281425	LABEL, ENG ROOM	1
5	50300834	DECAL/Z45	2
6	183935	DECAL/GEHL 5.50 X 23.34	3
7	184305	DECAL/GEHL 2.75 X 11.67 (WHITE)	1
8	50283226	LABEL,GREASING	1
10	50281361	LABEL	1
11	50281407	LABEL	1
12	50300780	DECAL/ZERO TAIL	2
13	50281173	LABEL,OPERATION PIN	1
14	50281130	LABEL,LOCK	1
15	50281174	LABEL, PIN US	1
16	50281175	LABEL,OPERATION Q US	1
17	50281176	LABEL, FINGER US	1
18	50281177	LABEL, SAND US	1
19	50281178	LABEL, WARNING HITCH	1
20	50283923	LABEL SPEC US	1
21	50281181	LABEL,LOCK PIN(US	1
22	50283357	LABEL,OIL & WATER	1
23	50283361	LABEL, LIFT Q US	1
24	50283251	LABEL	1
25	50281458	LABEL, SUB-TANK US	1
26	50281459	LABEL,ANTI-FREEZING	1
27	50282950	LABEL,ACCELERATOR	1
28	50281149	LABEL,HYD.OIL US	1
29	50281147	LABEL	1
30	50283359	LABEL,FUSE US	1
31	50281034	LABEL, FUEL US	1
32	50281035	LABEL, HOOK US	3
33	50281498	LABEL,STARTER	1
34	50280846	LABEL, GREASE	1
35	50280797	LABEL, AIR CLEANER	1
36	50282883	LABEL, CRAWLER US	1
37	50281018	TAG ASSY, CAUTION	1
38	50281019	LABEL, MANUAL US	1
39	50281020	LABEL,SLOPE US	1
40	50281021	LABEL, HYD.OIL TANK	1
41	50281022	LABEL, TRANSPORT US	1
42	50281023	LABEL, GREASE CYL.	2
43	50281024	LABEL, BATTERY US	1
44	50281025	LABEL, NEUTRAL US	1
45	50281026	LABEL,SWING AREA US	1
46	50281027	LABEL, RADIATOR US	1
47	50281028	LABEL, ENG,COVER US	1
48	50281029	LABEL, MUFFLER US	1
49	50281030	LABEL, STEERING US	1
50	50281031	LABEL, ROPS US	1
51	50281032	LABEL, SEAT BELT US	1
52	50282884	LABEL, BOOM US	2
53	50281033	LABEL, LEVER LOCK US	1
54	197868	LABEL/FUEL OIL NOTI	1
55	50281179	LABEL,SWITCH	1
56	50301147	LABEL,COVER	1
57	50283350	LABEL,PTO FOOT	1
58	50283351	LABEL,PTO SWITCH	1
59	50283352	LABEL,PTO SELECT	1
60	50281037	LABEL, 2-WAY US	1
61	50281038	LABEL	1
62	50281039	LABEL	1
63	50283362	LABEL,PTO EX	1

Z45 - COMPACT EXCAVATOR
FIG. 2 - LABEL (CABIN)

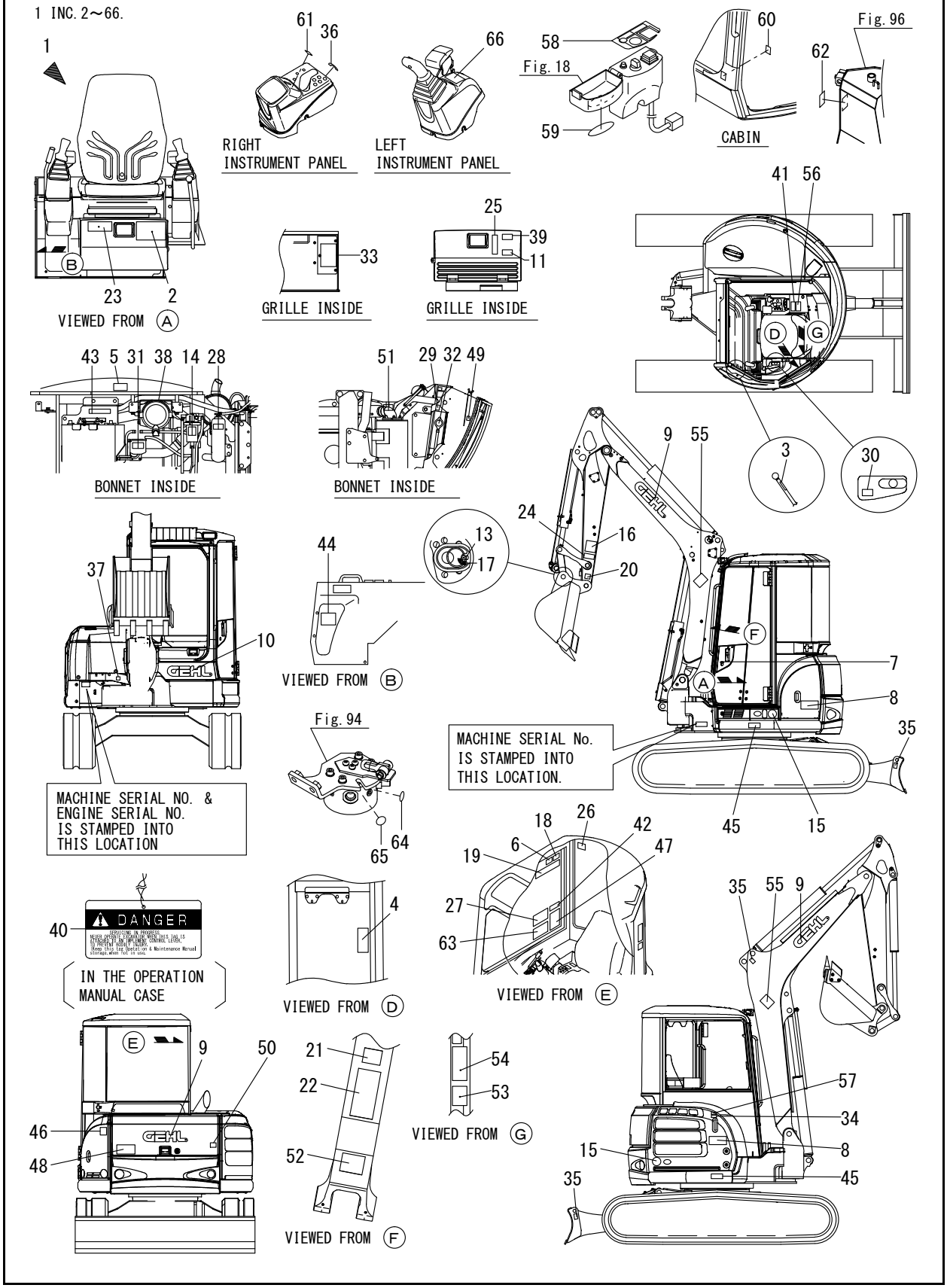

Ref. No.	Part No.	Description	Qty.
2	50281172	LABEL, SUPPORT US	1
3	50280917	LABEL,LOCK	1
4	50283217	LABEL,F/W LOWER US	1
5	50281425	LABEL, ENG ROOM	1
6	50281036	LABEL, WINDOW US	1
7	50282952	LABEL, DOOR KEY LOCK	1
8	50300834	DECAL/Z45	2
9	183935	DECAL/GEHL 5.50 X 23.34	3
10	184305	DECAL/GEHL 2.75 X 11.67 (WHITE)	1
11	50283226	LABEL,GREASING	1
13	50281361	LABEL	1
14	50281407	LABEL	1
15	50300780	DECAL/ZERO TAIL	2
16	50281173	LABEL,OPERATION PIN	1
17	50281130	LABEL,LOCK	1
18	50281174	LABEL, PIN US	1
19	50281175	LABEL,OPERATION Q US	1
20	50281176	LABEL, FINGER US	1
21	50281177	LABEL, SAND US	1
22	50281178	LABEL, WARNING HITCH	1
23	50283923	LABEL SPEC US	1
24	50281181	LABEL,LOCK PIN(US	1
25	50283357	LABEL,OIL & WATER	1
26	50283361	LABEL, LIFT Q US	1
27	50283251	LABEL	1
28	50281458	LABEL, SUB-TANK US	1
29	50281459	LABEL,ANTI-FREEZING	1
30	50282950	LABEL,ACCELERATOR	1
31	50281149	LABEL,HYD.OIL US	1
32	50281147	LABEL	1
33	50283359	LABEL,FUSE US	1
34	50281034	LABEL, FUEL US	1
35	50281035	LABEL, HOOK US	3
36	50281498	LABEL,STARTER	1
37	50280846	LABEL, GREASE	1
38	50280797	LABEL, AIR CLEANER	1
39	50282883	LABEL, CRAWLER US	1
40	50281018	TAG ASSY, CAUTION	1
41	50281019	LABEL, MANUAL US	1
42	50281020	LABEL,SLOPE US	1
43	50281021	LABEL, HYD.OIL TANK	1
44	50281022	LABEL, TRANSPORT US	1
45	50281023	LABEL, GREASE CYL.	2
46	50281024	LABEL, BATTERY US	1
47	50281025	LABEL, NEUTRAL US	1
48	50281026	LABEL,SWING AREA US	1
49	50281027	LABEL, RADIATOR US	1
50	50281028	LABEL, ENG,COVER US	1
51	50281029	LABEL, MUFFLER US	1
52	50281030	LABEL, STEERING US	1
53	50281031	LABEL, ROPS US	1
54	50281032	LABEL, SEAT BELT US	1
55	50282884	LABEL, BOOM US	2
56	50281033	LABEL, LEVER LOCK US	1
57	197868	LABEL/FUEL OIL NOTI	1
58	50281179	LABEL,SWITCH	1
59	50301147	LABEL,COVER	1
60	50283350	LABEL,PTO FOOT	1
61	50283351	LABEL,PTO SWITCH	1
62	50283352	LABEL,PTO SELECT	1
63	50281037	LABEL, 2-WAY US	1
64	50281038	LABEL	1
65	50281039	LABEL	1
66	50283362	LABEL,PTO EX	1

Z45 - COMPACT EXCAVATOR
FIG. 5 - SAFETY LABEL (CANOPY)

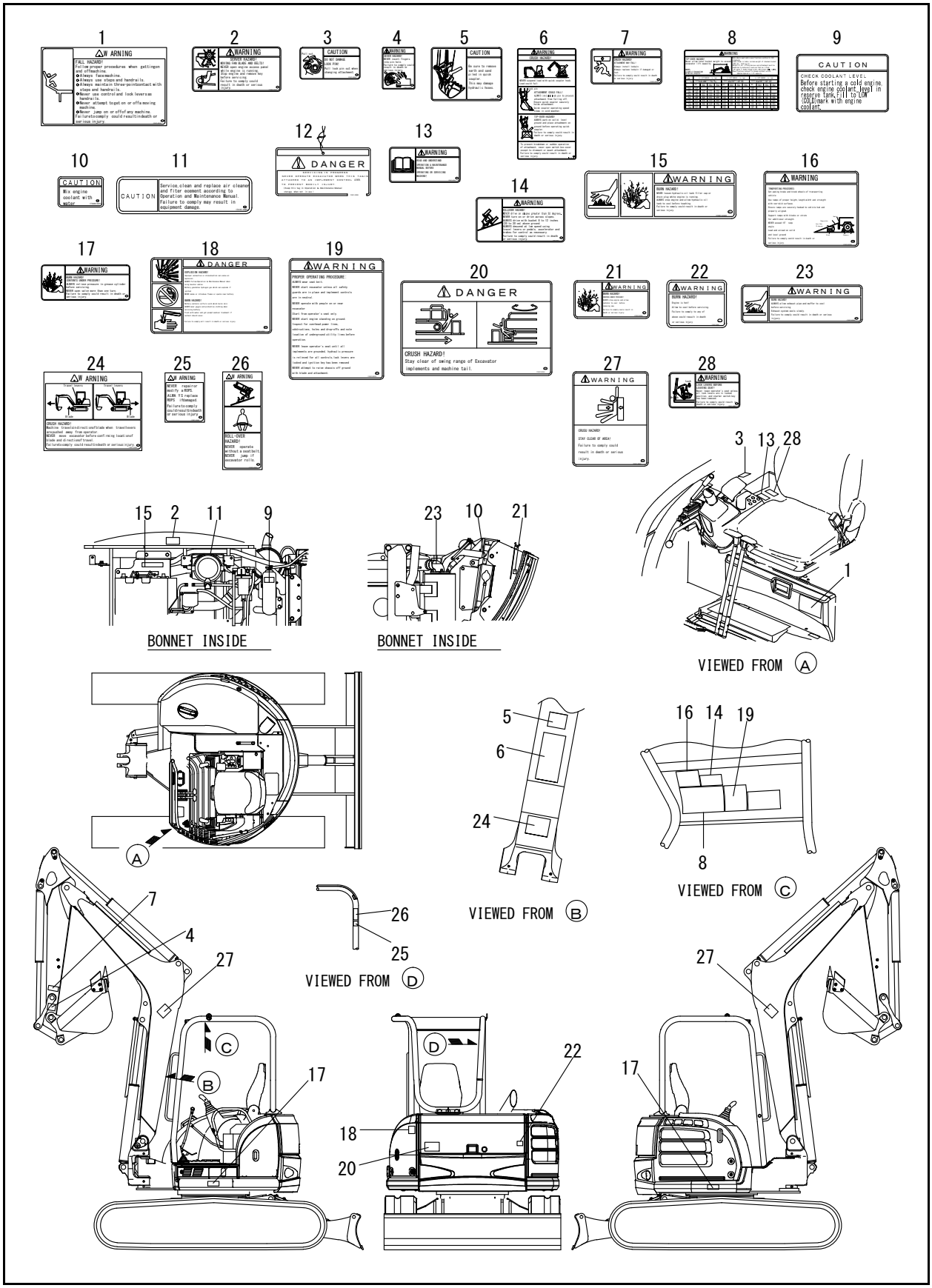

FIG. 5 - SAFETY LABEL (CANOPY)

Ref. No.	Part No.	Description	Qty.
1	50281172	LABEL, SUPPORT US	2
2	50281425	LABEL, ENG ROOM	1
3	50281174	LABEL, PIN US	1
4	50281176	LABEL, FINGER US	1
5	50281177	LABEL, SAND US	1
6	50281178	LABEL, WARNING HITCH	1
7	50281181	LABEL,LOCK PIN(US	1
8	50283361	LABEL, LIFT Q US	1
9	50281458	LABEL, SUB-TANK US	1
10	50281459	LABEL,ANTI-FREEZING	1
11	50280797	LABEL, AIR CLEANER	1
12	50281018	TAG ASSY, CAUTION	1
13	50281019	LABEL, MANUAL US	1
14	50281020	LABEL,SLOPE US	1
15	50281021	LABEL, HYD.OIL TANK	1
16	50281022	LABEL, TRANSPORT US	1
17	50281023	LABEL, GREASE CYL.	2
18	50281024	LABEL, BATTERY US	1
19	50281025	LABEL, NEUTRAL US	1
20	50281026	LABEL,SWING AREA US	1
21	50281027	LABEL, RADIATOR US	1
22	50281028	LABEL, ENG,COVER US	1
23	50281029	LABEL, MUFFLER US	1
24	50281030	LABEL, STEERING US	1
25	50281031	LABEL, ROPS US	1
26	50281032	LABEL, SEAT BELT US	1
27	50282884	LABEL, BOOM US	2
28	50281033	LABEL, LEVER LOCK US	1

Z45 - COMPACT EXCAVATOR

FIG. 6 - SAFETY LABEL (CABIN)

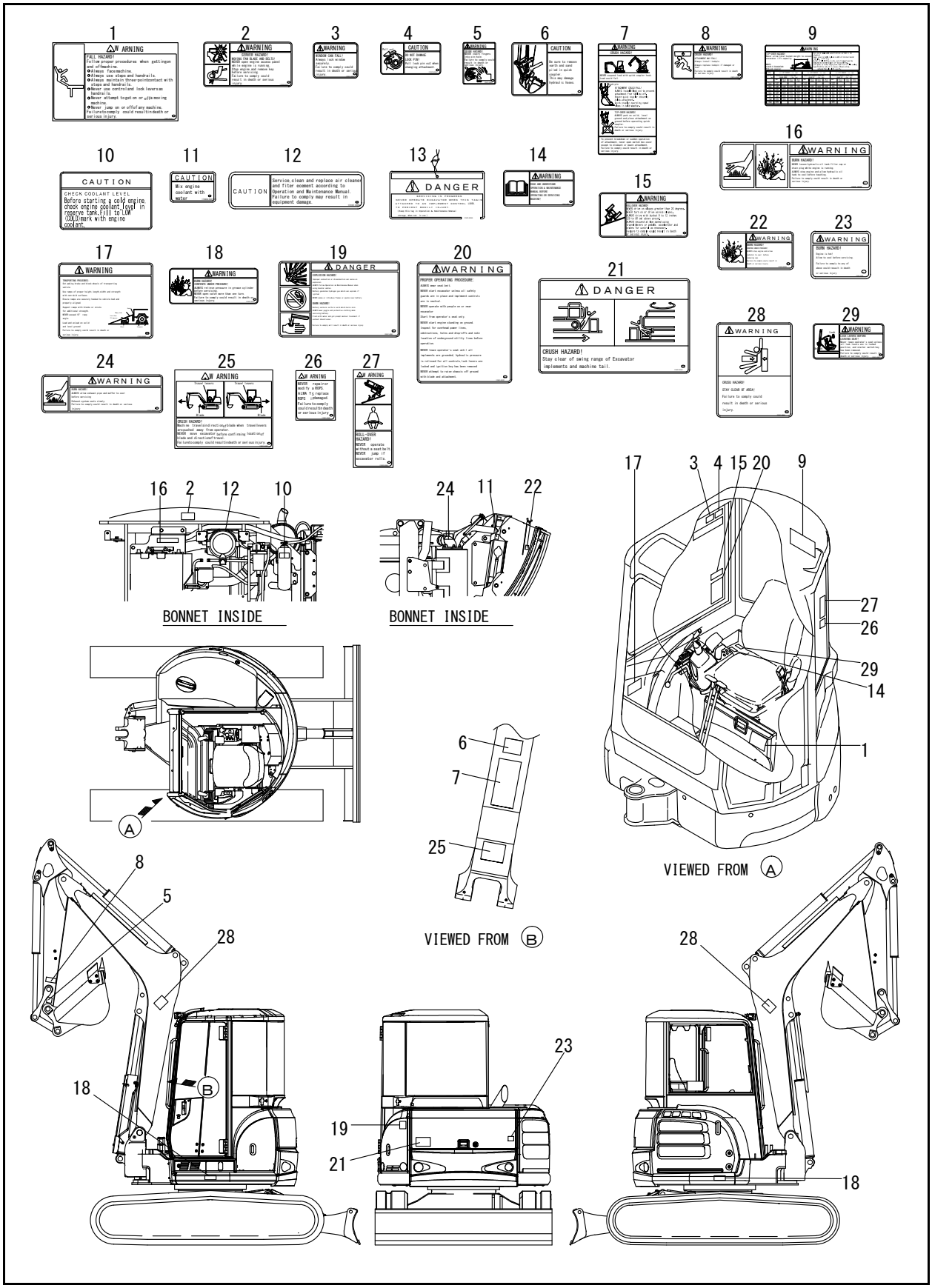

FIG. 6 - SAFETY LABEL (CABIN)

Ref. No.	Part No.	Description	Qty.
1	50281172	LABEL, SUPPORT US	1
2	50281425	LABEL, ENG ROOM	1
3	50281036	LABEL, WINDOW US	1
4	50281174	LABEL, PIN US	1
5	50281176	LABEL, FINGER US	1
6	50281177	LABEL, SAND US	1
7	50281178	LABEL, WARNING HITCH	1
8	50281181	LABEL,LOCK PIN(US	1
9	50283361	LABEL, LIFT Q US	1
10	50281458	LABEL, SUB-TANK US	1
11	50281459	LABEL,ANTI-FREEZING	1
12	50280797	LABEL, AIR CLEANER	1
13	50281018	TAG ASSY, CAUTION	1
14	50281019	LABEL, MANUAL US	1
15	50281020	LABEL,SLOPE US	1
16	50281021	LABEL, HYD.OIL TANK	1
17	50281022	LABEL, TRANSPORT US	1
18	50281023	LABEL, GREASE CYL.	2
19	50281024	LABEL, BATTERY US	1
20	50281025	LABEL, NEUTRAL US	1
21	50281026	LABEL,SWING AREA US	1
22	50281027	LABEL, RADIATOR US	1
23	50281028	LABEL, ENG,COVER US	1
24	50281029	LABEL, MUFFLER US	1
25	50281030	LABEL, STEERING US	1
26	50281031	LABEL, ROPS US	1
27	50281032	LABEL, SEAT BELT US	1
28	50282884	LABEL, BOOM US	2
29	50281033	LABEL, LEVER LOCK US	1

Z45 - COMPACT EXCAVATOR

FIG. 7 - SILENCER & AIR CLEANER

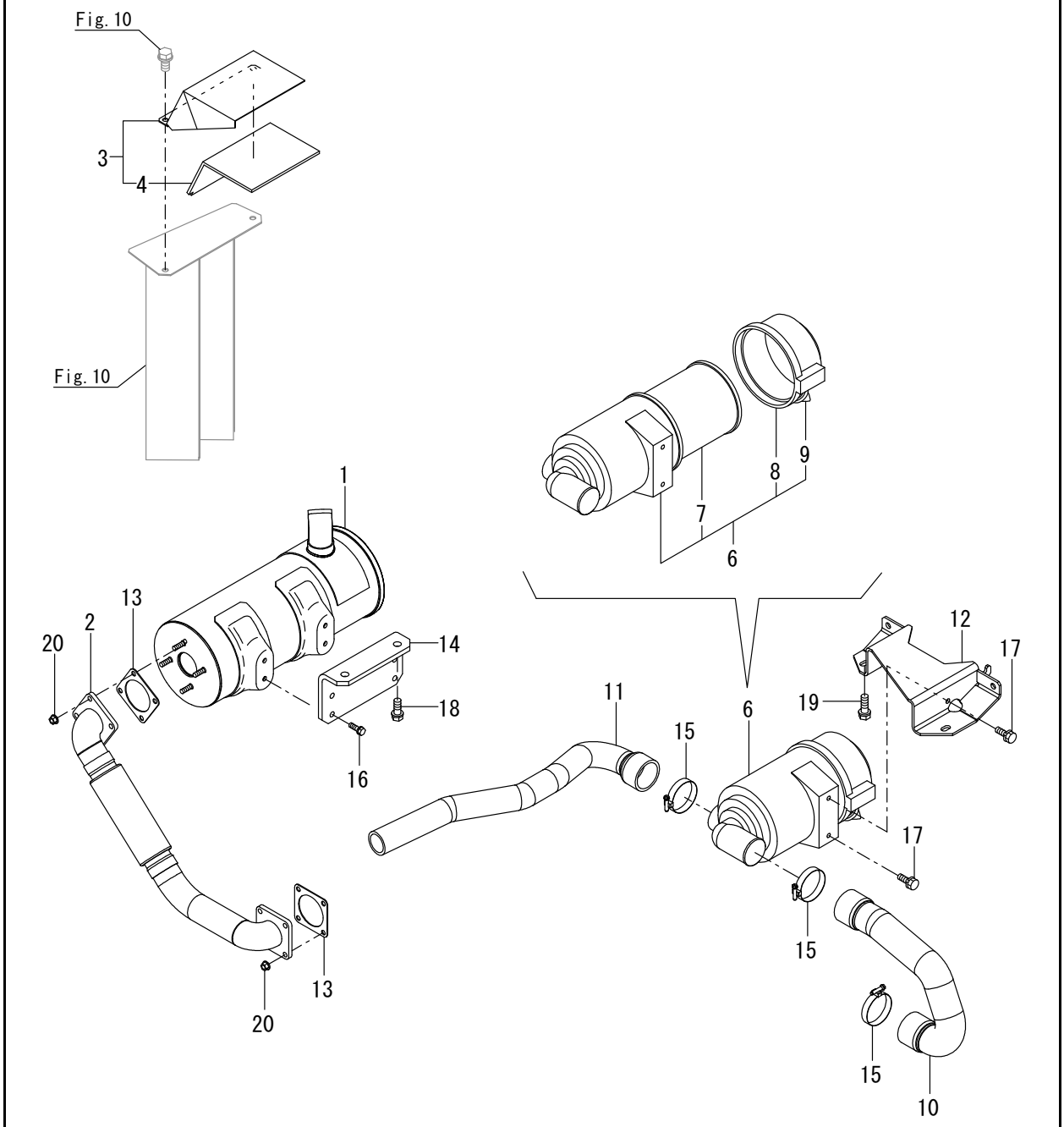

FIG. 7 - SILENCER & AIR CLEANER

Ref. No.	Part No.	Description	Qty.
1	50283371	SILENCER ASSY (use with label 21A)	1
2	50283202	TUBE ASSY	1
3	50283373	GUARD D ASSY,MUFFLER	1
4	50283374	GLASSWOOL,GUARD D	1
6	50283375	CLEANER ASS,AIR	1
7	50282682	ELEMENT, AIR CLEANER	1
8	50282680	COVER ASSY (use with label 21B)	1
9	50280727	VALVE, UNLOADER	1
10	50283928	HOSE A,AIRCLEANER	1
11	50283929	HOSE B,ASSY	1
12	50283378	BRACKET ASSY	1
13	425-34652	GASKET	2
14	50283391	BRACKET,MUFFLER	1
15	425-36133	CLAMP 70	3
16	50282508	BOLT M 8X 25	4
17	50282508	BOLT M 8X 25	2
18	50282525	BOLT W/WASHER M12X30	2
19	50282539	BOLT 10X25 W/PLW+SPW	2
20	50282548	NUT M 8	8
21A	50281029	LABEL, MUFFLER US (see Page 4, Page 6)	1
21B	50280797	LABEL, AIR CLEANER (see Page 4, Page 6)	1

Z45 - COMPACT EXCAVATOR

FIG. 8 - ACCELERATOR

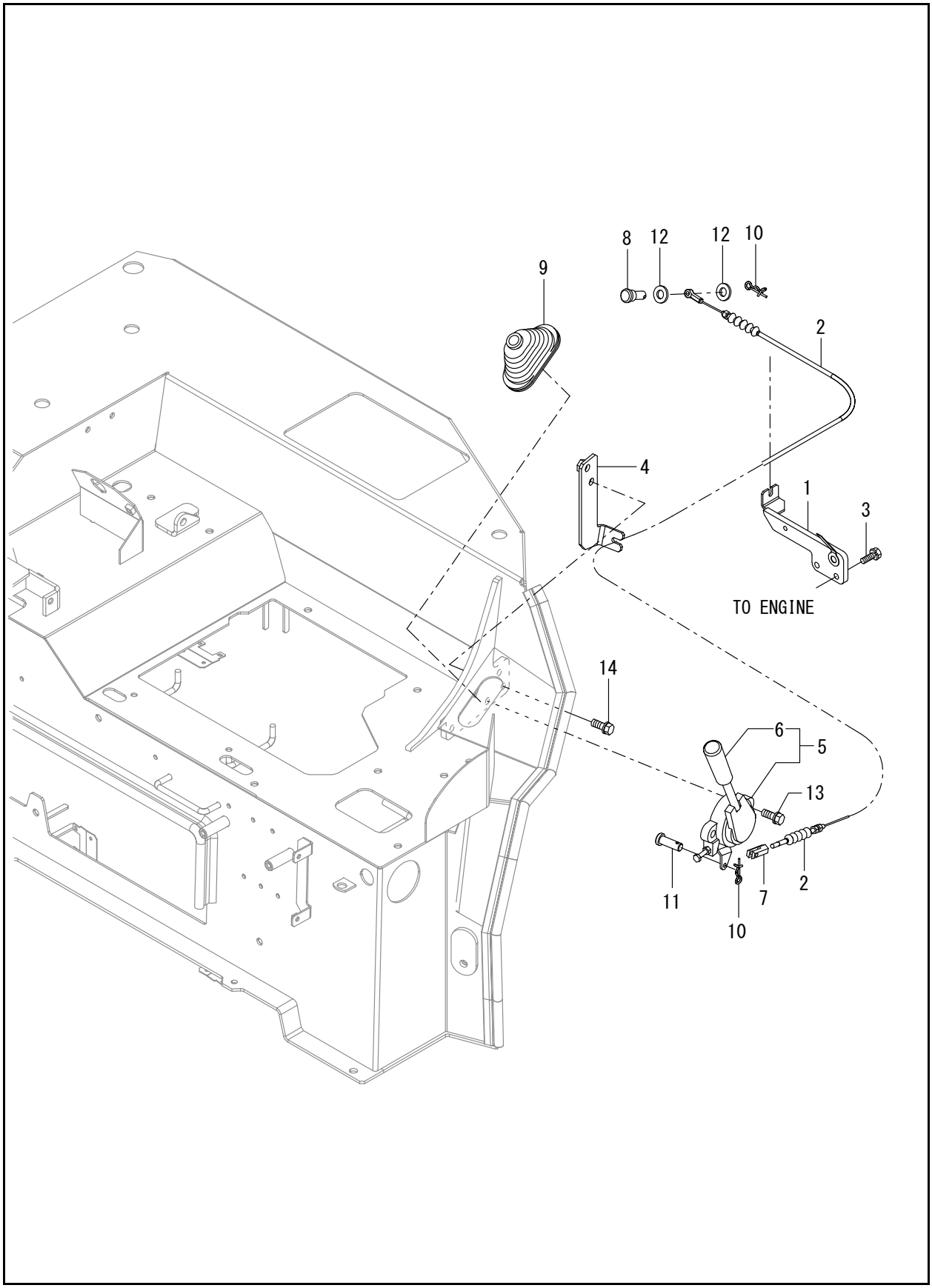

FIG. 8 - ACCELERATOR

Ref. No.	Part No.	Description	Qty.
1	50283257	BRACKET	1
2	50283380	CABLE, ACCELERATOR	1
3	50282507	BOLT W/WASHER M8X20	2
4	50283379	BRACKET, CABLE	1
5	50283381	CABLE LEVER	1
6	50285139	GRIP	1
7	50282719	JOINT, CABLE	1
8	50282690	PIN	1
9	50282725	BOOTS	1
10	50284017	PIN 6,COME-OFF SNAP	2
11	50284007	PIN 6 X 17	1
12	50282379	WASHER 6, POLISHED	2
13	50282516	BOLT W/WASHER M10X25	2
14	50282516	BOLT W/WASHER M10X25	2

Z45 - COMPACT EXCAVATOR

FIG. 9 - ENGINE MOUNT

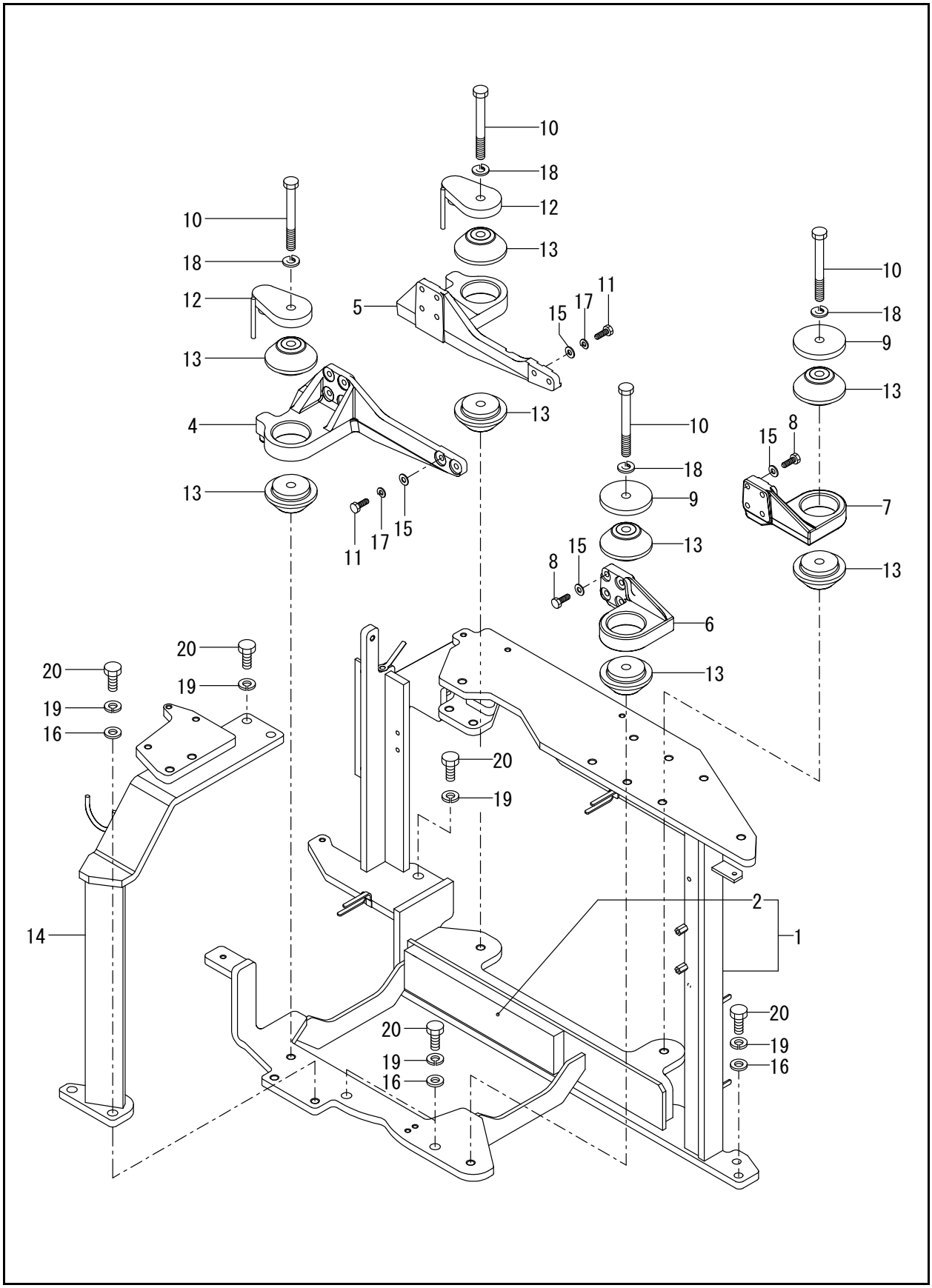

FIG. 9 - ENGINE MOUNT

Ref. No.	Part No.	Description	Qty.
1	50283930	ASSY,ENG MT	1
2	50283931	EV,ENG MT	1
4	50283258	MOUNT RF,ENG	1
5	50283259	MOUNT, ENGINE	1
6	50283203	MOUNT, ENGINE	1
7	50283204	MOUNT, ENGINE	1
8	50283205	BOLT M10 X 40	8
9	50280851	WASHER	2
10	50280853	BOLT M16X150	4
11	50282770	BOLT M10X30	12
12	50282793	STOPPER ASSY	2
13	50282794	MOUNT,ENGINE	8
14	50283399	BRACKET ASSY	1
15	50280803	SEAT, SPRING	20
16	50282382	WASHER 16,POLISHED	5
17	50282393	SPRING WASHER 10	12
18	50282396	SPRING WASHER 16	4
19	50282396	SPRING WASHER 16	10
20	50282552	BOLT 10.9 16X40	10

Z45 - COMPACT EXCAVATOR

FIG. 10 - RADIATOR & MOUNT

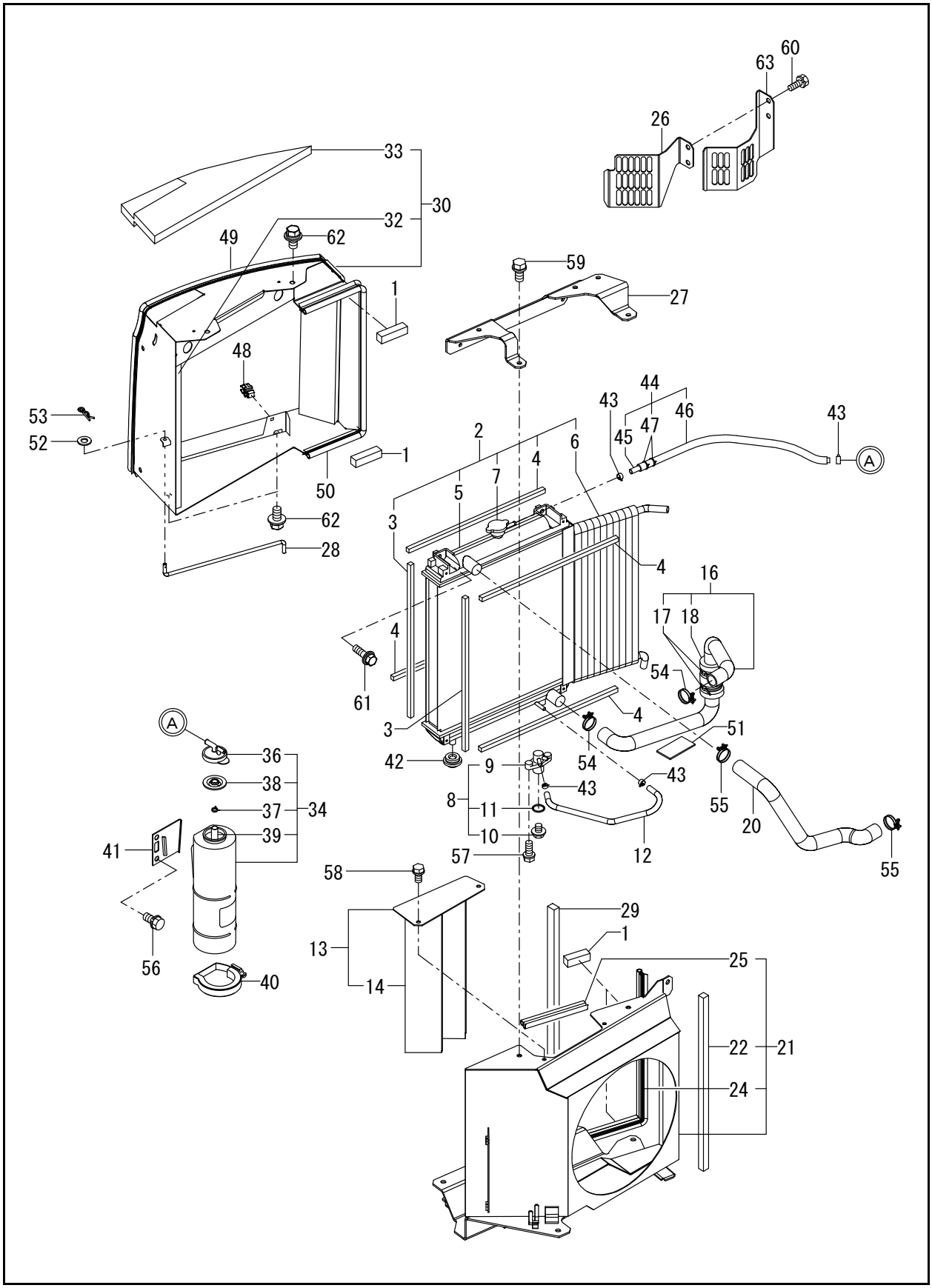

Ref. No.	Part No.	Description	Qty.
1	50283386	SEAL 200	4
2	50283387	RADIATOR ASSY	1
3	50283382	PACKING,T26	2
4	50283383	PACKING,T10	4
5	50283388	RADIATOR	1
6	50283389	OIL COOLER	1
7	186470	CAP RADIATOR	1
8	50281046	COCK ASSY,2-WAY	1
9	50281047	BODY	1
10	50280728	PLUG	1
11	425-34744	O-RING 1A P-16.0	1
12	50282710	HOSE	1
13	50283393	COVER ASSY	1
14	50283394	EV,COVER	2
16	50283395	PIPE ASSY, C.W.	1
17	50280798	BAND 300	2
18	50283392	SPNGE,HOSE	1
20	50283396	CW-T B	1
21	50283397	SHROUD ASSY	1
22	50283385	SEAL 450	1
24	50283244	RUBBER,SEAL 290	1
25	50282775	SEAL,COVER B	1
26	50283398	GUARD,FAN	1
27	50283400	BRACKET ASSY (use with label 64A)	1
28	50283402	HOOK	1
29	50283403	SEAL,SHROUD	1
30	50283404	DUCT ASSY (use with label 64B)	1
32	50283409	EV,B	1
33	50283410	EV,C	1
34	50280743	SUB-TANK ASSY (use with label 64C)	1
36	186359	CAP	1
37	186461	CLAMP	1
38	186361	GASKET	1
39	50282436	HOSE 7X 225	1
40	425-36235	BAND	1
41	50280729	BRACKET, SUB-TANK	1
42	50282346	RUBBER, RADIATOR	2
43	425-34916	CLAMP 12	4
44	50283996	HOSE ASSY, FUEL OIL	1
45	50282724	HOSE, FUEL	1
46	50283997	TUBE, CORRUGATE	1
47	50284153	BAND 146	2
48	50282365	HOLDER, ROD 8	1
49	50283243	RUBBER,SEAL 1110	2
50	50282789	RUBBER, SEAL B	1
51	50282898	RUBBER	1
52	50282380	WASHER 8, POLISHED	1
53	50282415	SNAP PIN (JASO 8)	1
54	50282430	CLIP 41,HOSE	2
55	50282431	CLIP, HOSE	2
56	50282505	BOLT M 8X 12	2
57	50282507	BOLT W/WASHER M8X20	2
58	50282507	BOLT W/WASHER M8X20	2
59	50282515	BOLT W/WASHER M10X20	2
60	50282516	BOLT W/WASHER M10X25	2
61	50284104	BOLT M8 X 30	2
62	50282538	BOLT M10X 20	4
63	50283401	GUARD,FAN LOWER	1
64A	50281459	LABEL,ANTI-FREEZING (see Page 4, Page 6)	1
64B	50281027	LABEL, RADIATOR US (see Page 4, Page 6)	1
64C	50281458	LABEL, SUB-TANK US (see Page 4, Page 6)	1

Z45 - COMPACT EXCAVATOR

FIG. 11 - FUEL TANK

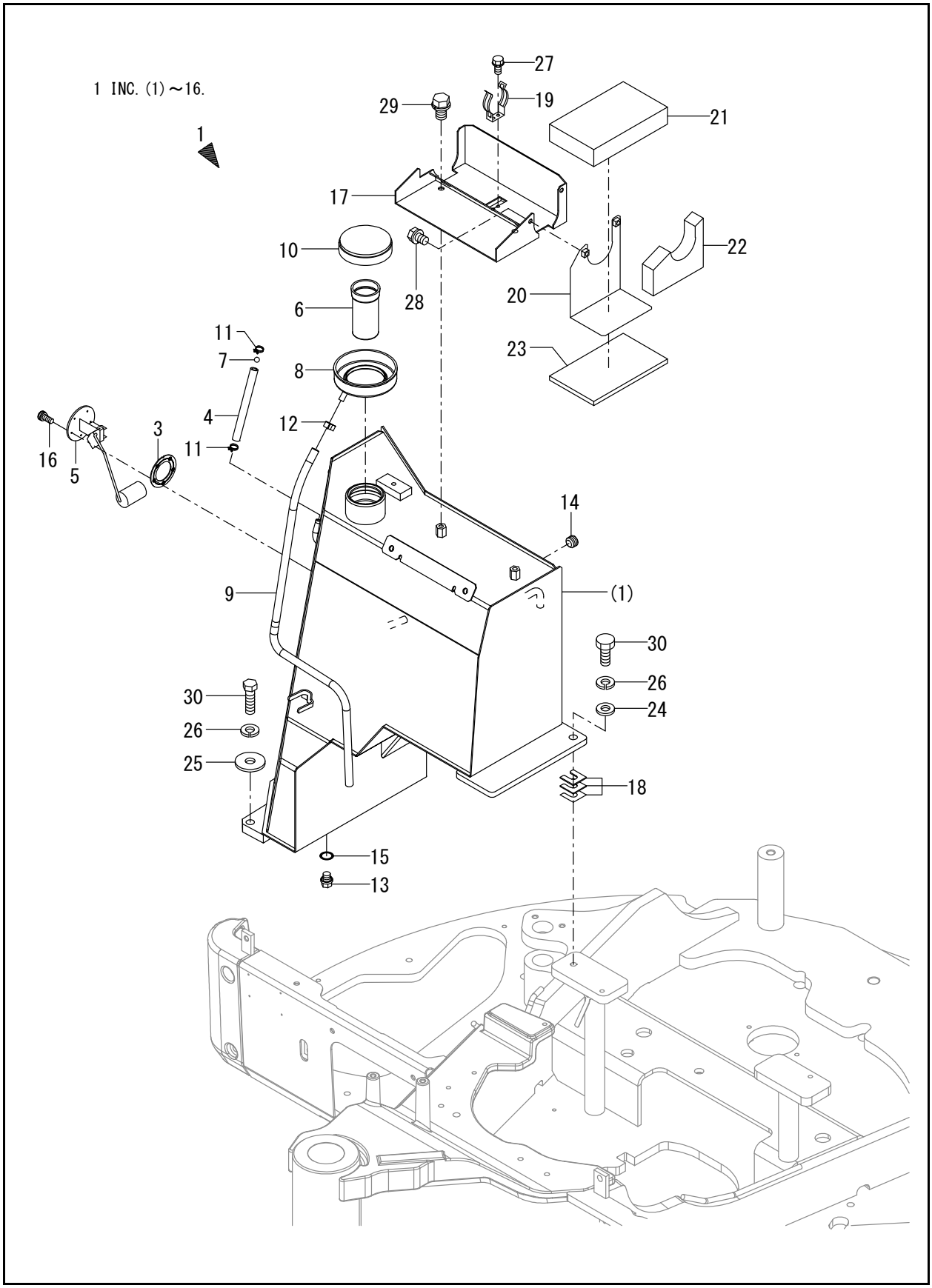

FIG. 11 - FUEL TANK

Ref. No.	Part No.	Description	Qty.
1	50284147	FUEL TANK (GRAY:49)	1
3	50280854	GASKET	1
4	50283405	HOSE,FO.GAUGE	1
5	50282080	GAUGE UNIT, FUEL	1
6	50282836	FILTER FUEL	1
7	50282723	FLOAT	1
8	50282953	CUP,FUEL OIL	1
9	50283407	HOSE	1
10	50282673	CAP, FUEL TANK	1
11	50284065	CLAMP 14	2
12	50282437	CLAMP 13,HOSE	1
13	50284068	PLUG 14	1
14	188723	PLUG PT 1/2	1
15	425-34744	O-RING 1A P-16.0	1
16	425-36271	SCREW M 5 X 12	5
17	50283369	PLATE ASSY,TOOL BOX	1
18	50282693	SPACER (M20)	1
19	50280784	BRACKET, GREASE PUMP	1
20	50283550	PLATE,EV ASSY	1
21	50283564	EV,INTAKE	1
22	50283566	EV A,COVER	1
23	50283567	EV B,COVER	1
24	50284042	WASHER 14,POLISHED	2
25	50282389	WASHER, 14	1
26	188712	SPRING/WASHER 14	3
27	50282501	BOLT M 6X 12	2
28	50282505	BOLT M 8X 12	2
29	50282514	BOLT M10X 16	2
30	50282567	BOLT M14X 35 PLATED	3

Z45 - COMPACT EXCAVATOR

FIG. 12 - FUEL LINE

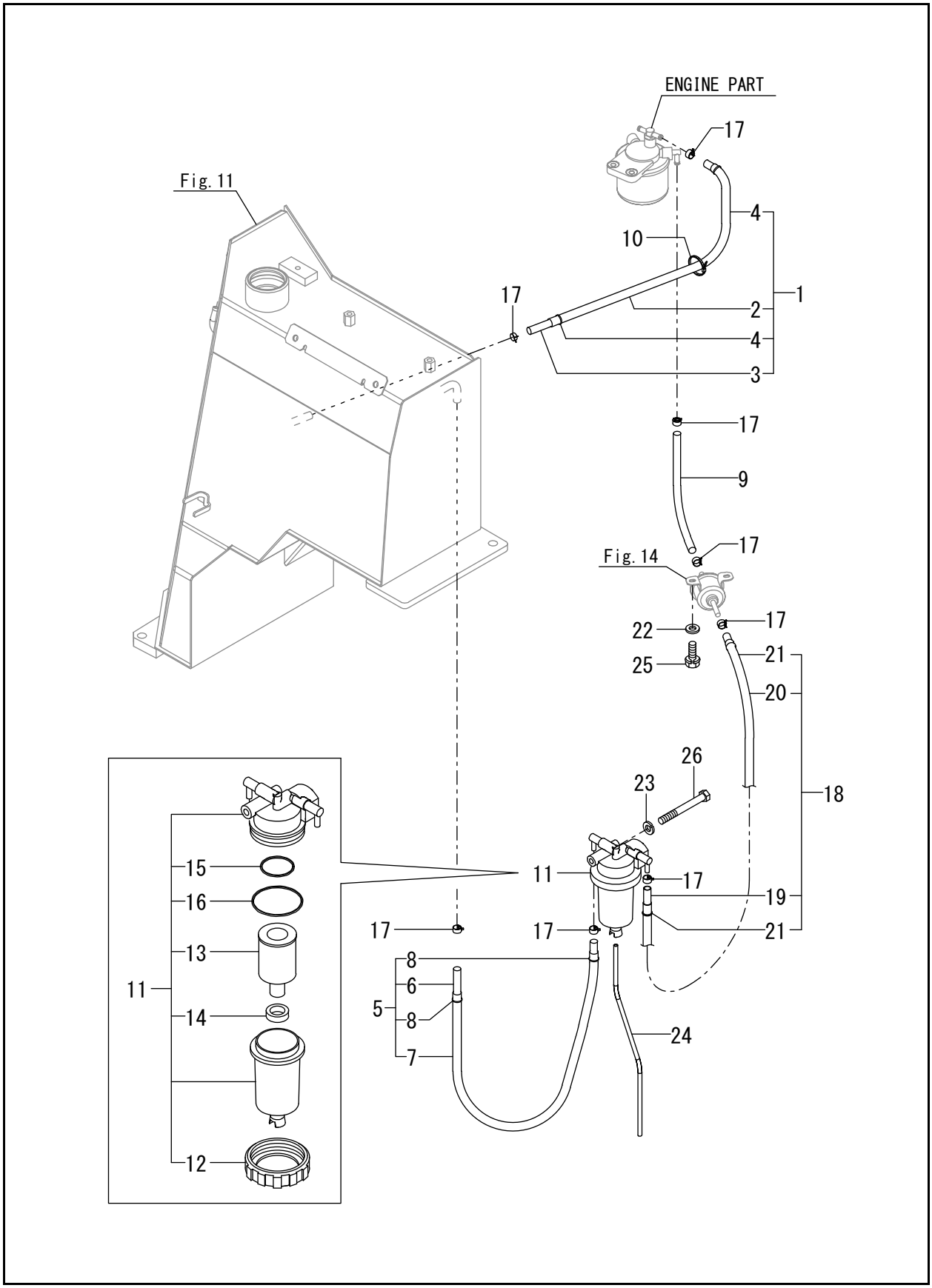

Ref. No.	Part No.	Description	Qty.
1	50283406	FO.HOSE 1850 ASSY	1
2	50284000	TUBE, CORRUGATE	1
3	50286591	HOSE	1
4	50284153	BAND 146	2
5	50283932	HOSE 1430 ASSY ,FUEL	1
6	50286515	FUEL HOSE	1
7	50282911	TUBE, CORRUGATE	1
8	50284153	BAND 146	2
9	50282837	HOSE	1
10	50280802	BAND	2
11	50282349	SEPARATOR ASSY,WATER	1
12	425-34924	RING, RETAINING	1
13	186340	FILTER	1
14	50286600	FLOAT	1
15	425-34744	O-RING 1A P-16.0	1
16	425-34927	O-RING 1A G65	1
17	425-34916	CLAMP 12	8
18	50283998	PIPE ASSY, FUEL 1050	1
19	50286461	HOSE	1
20	50283999	TUBE, CORRUGATE	1
21	50284153	BAND 146	2
22	50282379	WASHER 6, POLISHED	1
23	50282392	WASHER, 8	1
24	50284066	PIPE,VINYL 5	1
25	50282502	BOLT M 6X 16	1
26	50284116	BOLT M8 X 70 PLATED	1

FIG. 13 - BATTERY

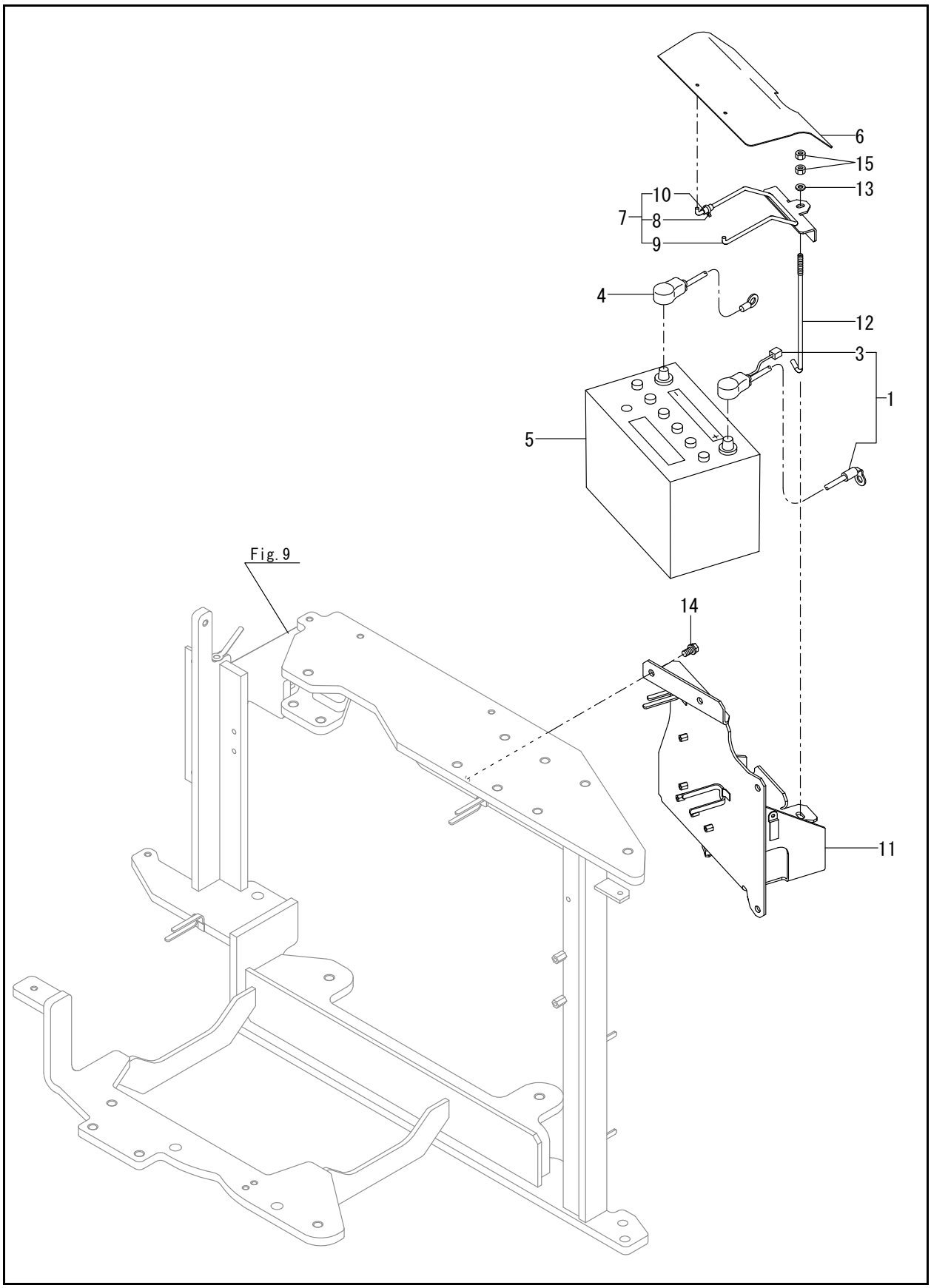

FIG. 13 - BATTERY

Ref. No.	Part No.	Description	Qty.
1	50283412	CORD ASSY,BATTERY	1
3	50283995	HARNESS C	1
4	50283415	CORD BATTERY	1
5	N/A	BATTERY *	1
6	50283417	COVER,BATTERY	1
7	50283418	CLAMP,BATTERY (GRAY: 49)	1
8	50280798	BAND 300	1
9	50283077	CLAMP ASSY, BATTERY	1
10	50283329	HOSE,CLAMP	1
11	50283420	MOUNT BATTERY ASSY (use with label 16A)	1
12	50280887	ROD	1
13	50282380	WASHER 8, POLISHED	1
14	50282515	BOLT W/WASHER M10X20	4
15	50282596	NUT M 8	2
16A	50281021	LABEL, HYD.OIL TANK (see Page 4, Page 6)	1

NOTE: * Purchase locally. Group size 27; 620 CCA.

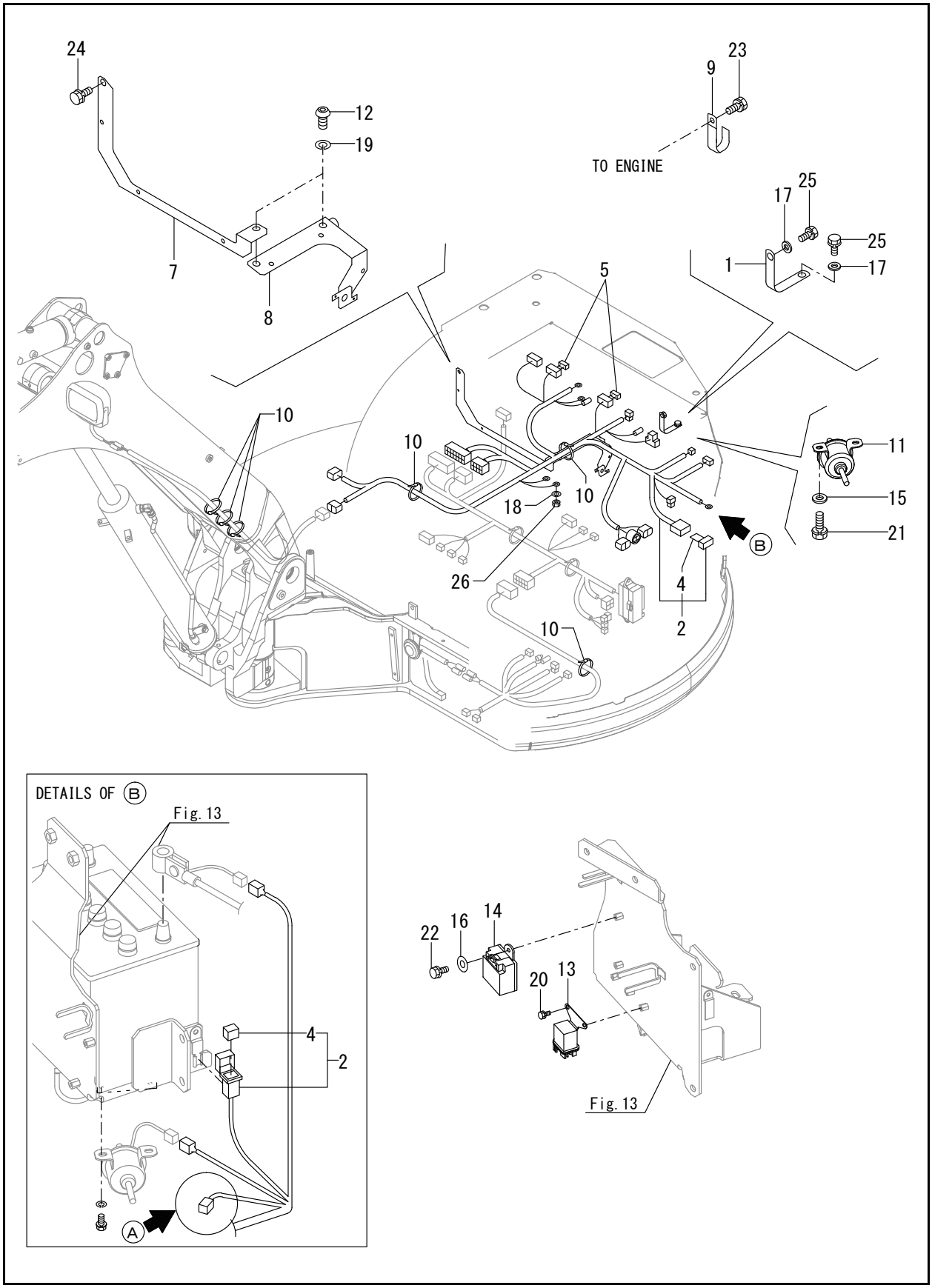
24
12
19
7
8
9
23
TO ENGINE
17
25
25
1
17
5
10
10
10
18
26
4
2
10
11
15
21
B
DETAILS OF B
Fig. 13
4
2
A
22
16
14
20
13
Fig. 13

FIG. 14 - ELECTRIC PART (AROUND ENGINE)

Ref. No.	Part No.	Description	Qty.
1	50283416	WIRE,ENGINE GROUND	1
2	50283934	HARNESS A ASSY	1
4	50282955	FUSE,SLOW BLOW (50A)	1
5	50281346	DIODE	2
7	50283264	SUPPORT B,HARNESS	1
8	50283252	SUPPORT A,CONNECTOR	1
9	50284002	CLAMP, WIRE HARNESS	1
10	50284003	BAND	6
11	186483	FUEL PUMP	1
12	50281073	BOLT M 10X20	2
13	50282677	RELAY ASSY, GLOW	1
14	50280735	TIMER	1
15	50282379	WASHER 6, POLISHED	2
16	50282379	WASHER 6, POLISHED	1
17	138111	WASHER/POLISHED	2
18	425-34891	SPRING WASHER 6	1
19	50282393	SPRING WASHER 10	2
20	50282501	BOLT M 6X 12	2
21	50282502	BOLT M 6X 16	2
22	50282502	BOLT M 6X 16	1
23	50282505	BOLT M 8X 12	1
24	50282514	BOLT M10X 16	1
25	50282515	BOLT W/WASHER M10X20	3
26	138143	NUT	1

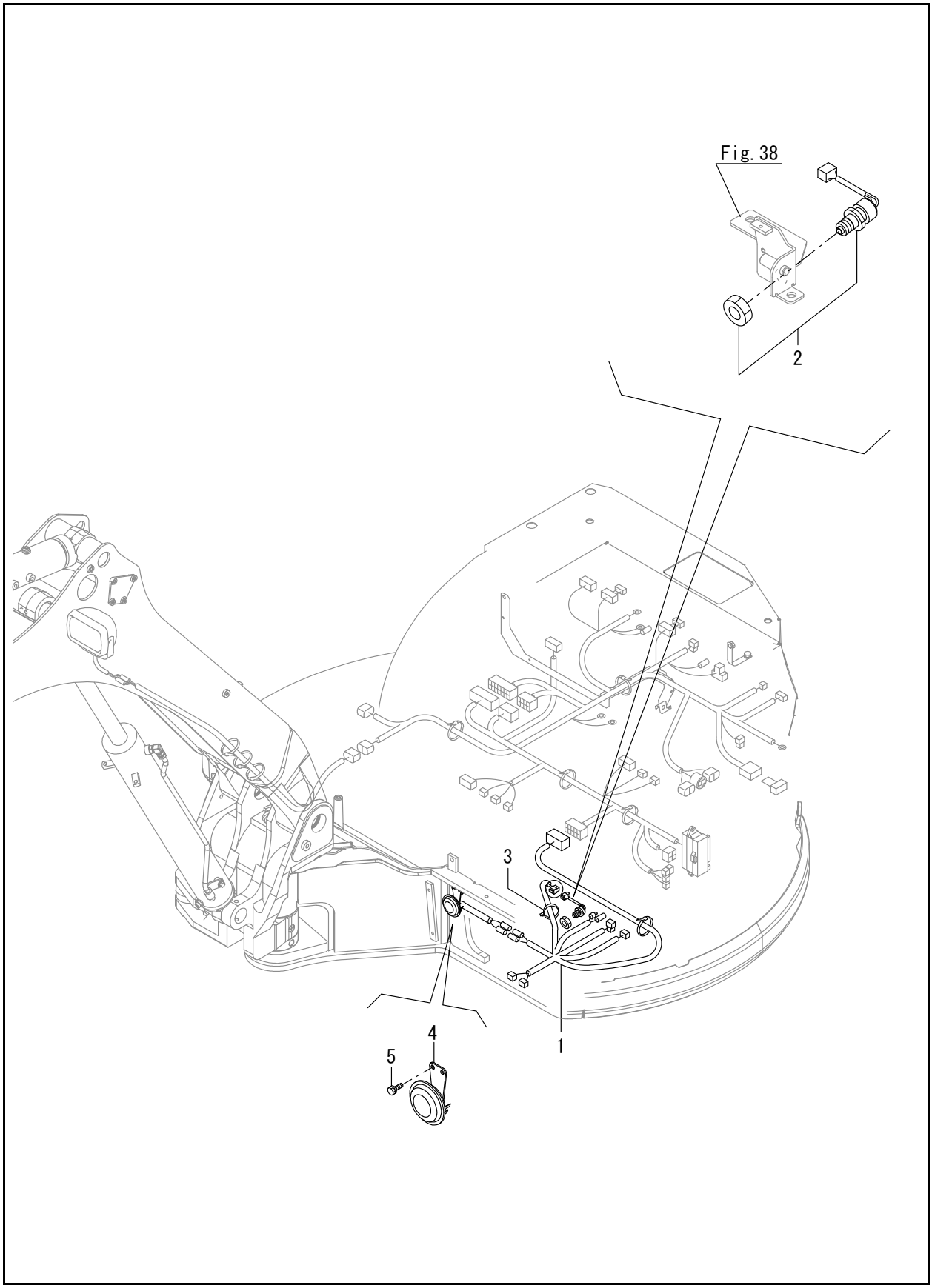
Fig. 38
2
3
1
4
5

FIG. 15 - ELECTRIC PART (AROUND FRAME)

Ref. No.	Part No.	Description	Qty.
1	50283422	HARNESS C	1
2	50284018	SWITCH ASSY	1
3	50282352	BAND	1
4	50282351	HORN	1
5	50282501	BOLT M 6X 12	2

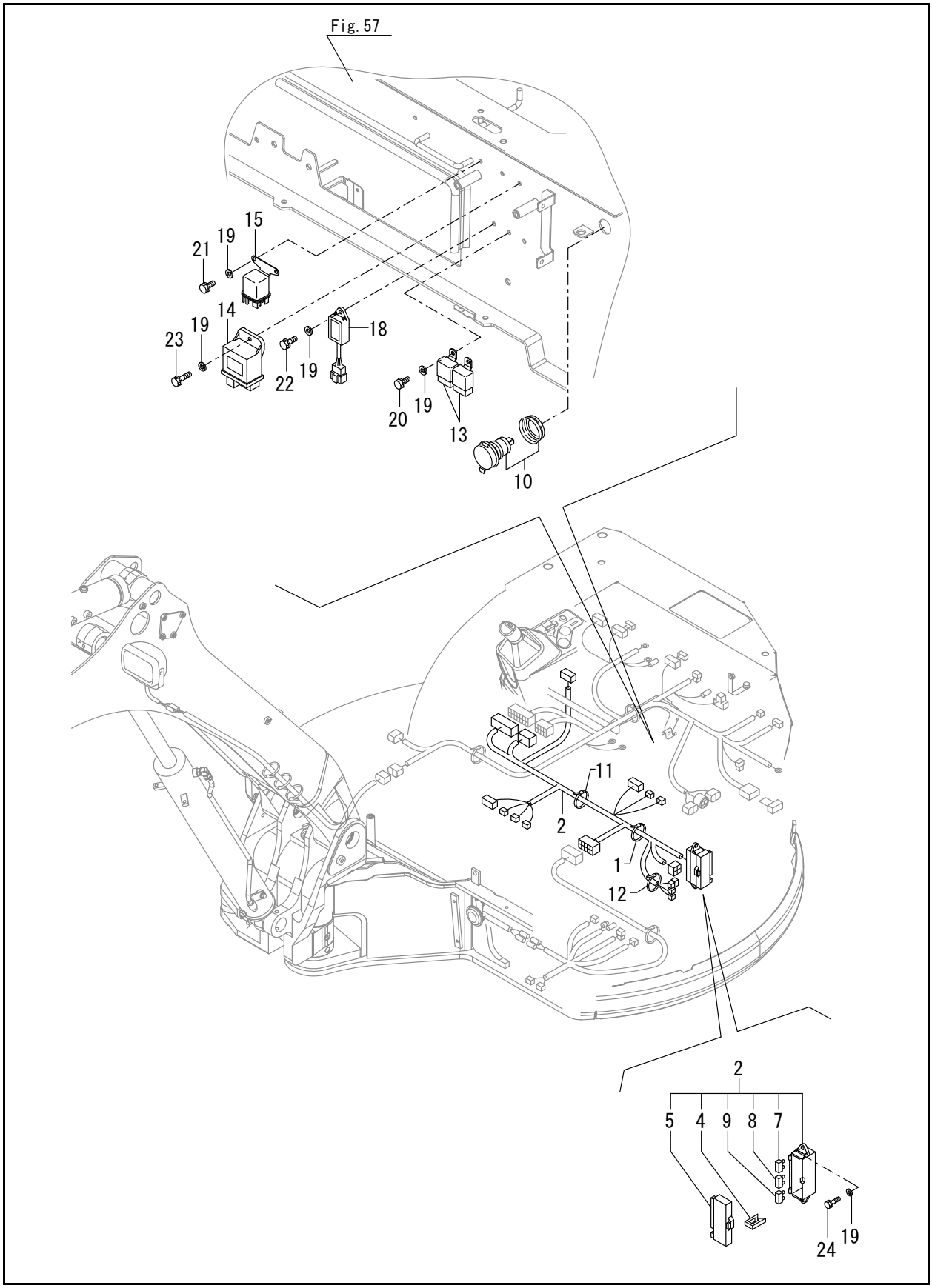
Fig. 57
15
19
21
14
19
23
18
22
19
20
19
13
10
11
2
1
12
2
5
4
9
8
7
24
19

FIG. 16 - ELECTRIC PART (EQUIPMENT)

Ref. No.	Part No.	Description	Qty.
1	50280798	BAND 300	1
2	50283918	HARNESS ASSY,B EX	1
3	50286601	HANESS B EX	1
4	50280906	PULLER	1
5	50280933	COVER	1
7	50282604	FUSE, 5A	2
8	50284141	FUSE, 15A	6
9	50282606	FUSE B30	2
10	50281499	SOCKET ASSY	1
11	50284003	BAND	2
12	50282352	BAND	1
13	50282675	RELAY	2
14	186341	RELAY SAFETY	1
15	50282677	RELAY ASSY, GLOW	1
18	138089	TIMER	1
19	50282379	WASHER 6, POLISHED	6
20	50282501	BOLT M 6X 12	2
21	50282501	BOLT M 6X 12	2
22	50282502	BOLT M 6X 16	1
23	50284095	BOLT M6 X 20	1
24	50284095	BOLT M6 X 20	2

FIG. 17 - ELECTRIC PART (STARTING SWITCH)

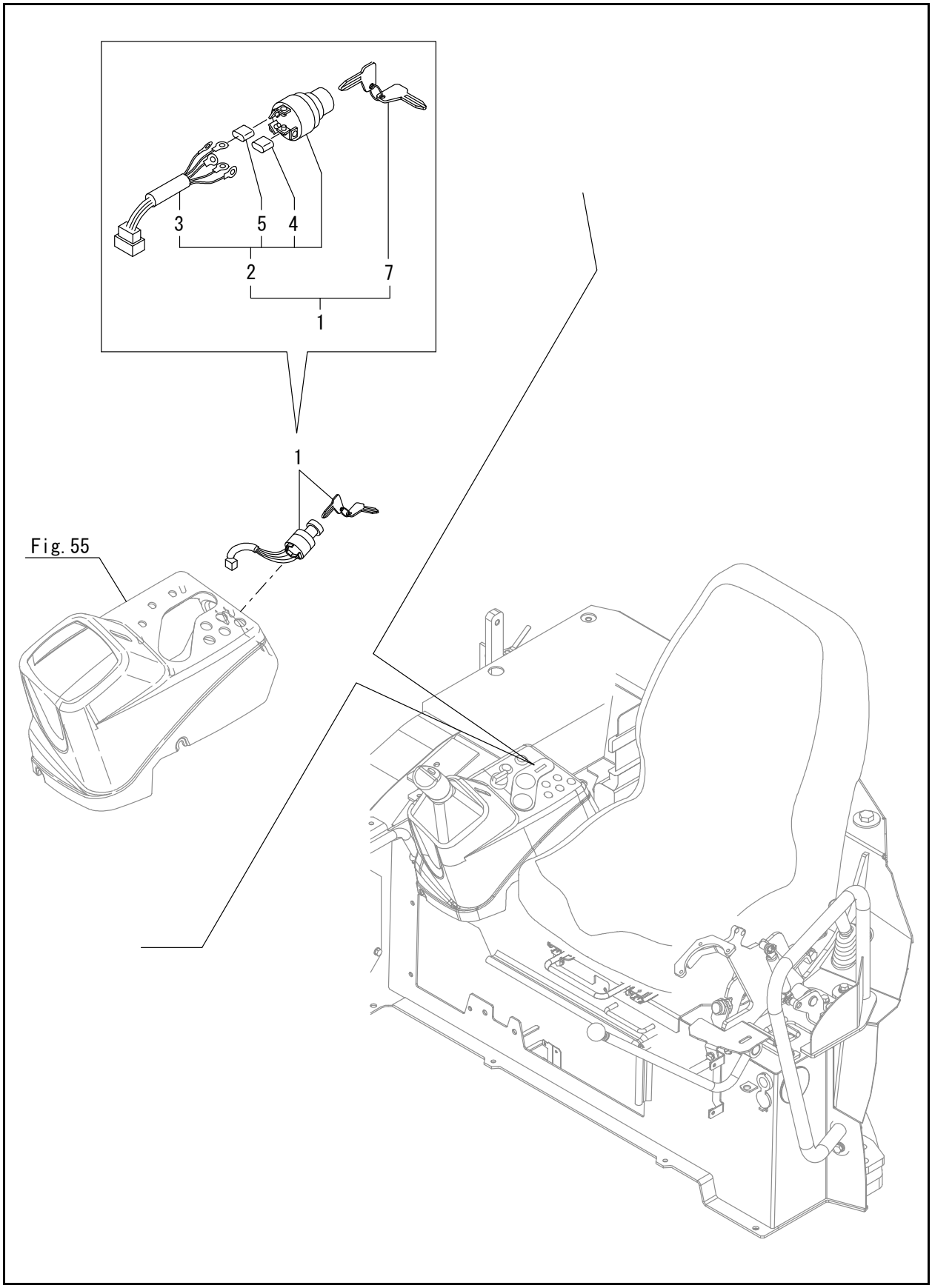

FIG. 17 - ELECTRIC PART (STARTING SWITCH)

Ref. No.	Part No.	Description	Qty.
1	50280932	SWITCH, START	1
2	50283430	CYLINDER ASSY,KEY	1
3	50280929	CODE	1
4	50280930	COVER M5	3
5	50280931	COVER M4	2
7	50282616	KEY ASSY	1

FIG. 18 - ELECTRIC PART (QUICK COUPLER : SWITCH BOX)

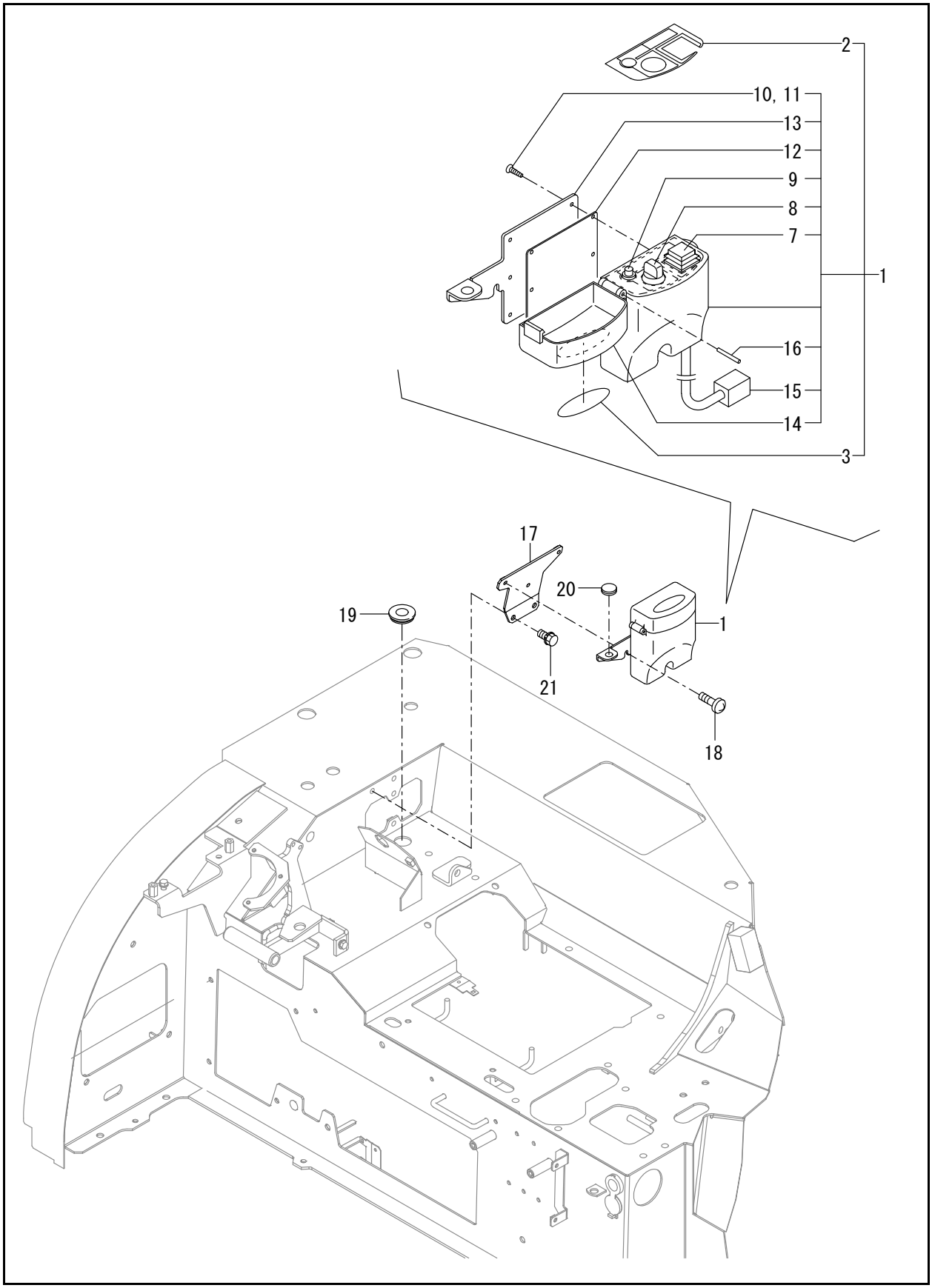

FIG. 18 - ELECTRIC PART (QUICK COUPLER : SWITCH BOX)

Ref. No.	Part No.	Description	Qty.
1	50281362	SWITCH BOX(EX	1
2	50281179	LABEL,SWITCH	1
3	50301147	LABEL,COVER	1
7	50281364	SWITCH ASSY(GEN	1
8	50281365	SWITCH ASSY(CONTR	1
9	50281366	INDICATOR LAMP(CP	1
10	50281367	TAPPING SCREWS	6
11	50281368	TAPPING SCREWS	2
12	50281369	PACKING	1
13	50281370	BRACKET	1
14	50281371	CASE, UPPER	1
15	50281372	CODE CP 4P	1
16	50282412	SPRING PIN 3X28	1
17	50283437	STAY ASSY,SWITCH BOX	1
18	50280804	SCREW	3
19	50281373	PLUG	1
20	50280948	PLUG	1
21	50282506	BOLT W/WASHER M8X16	2

FIG. 19 - ELECTRIC PART (WORK LAMP)

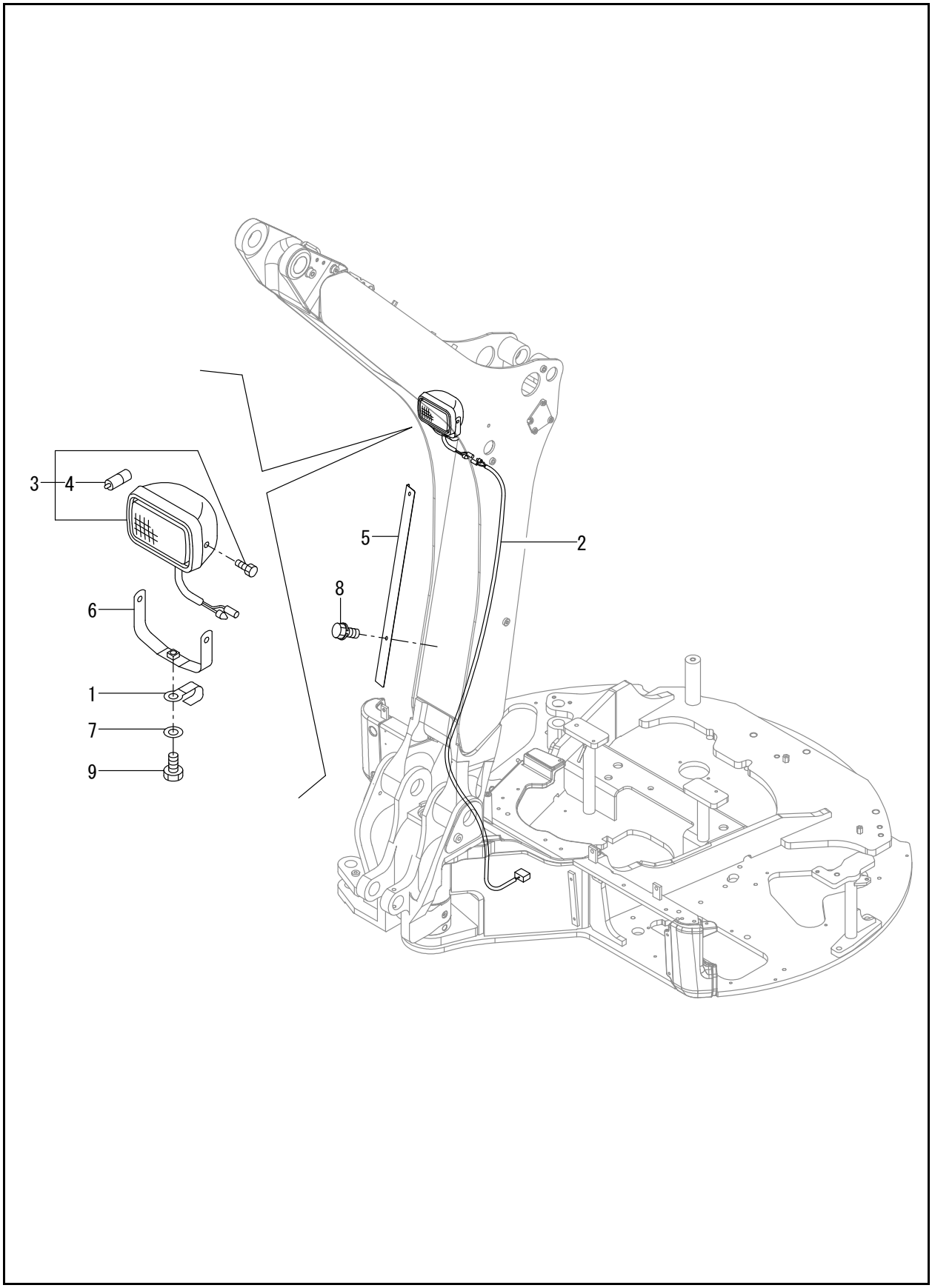

FIG. 19 - ELECTRIC PART (WORK LAMP)

Ref. No.	Part No.	Description	Qty.
1	50280799	CLAMP 10X70	1
2	50283935	HARNESS BOOM LAMP	1
3	50282962	LAMP 150X95	1
4	50281132	BULB,12V 55W	1
5	50286365	HARNESS COVER	1
6	50286285	LAMP STAY ASSY	1
7	138111	WASHER/POLISHED	1
8	50282514	BOLT M10X 16	2
9	50282515	BOLT W/WASHER M10X20	1

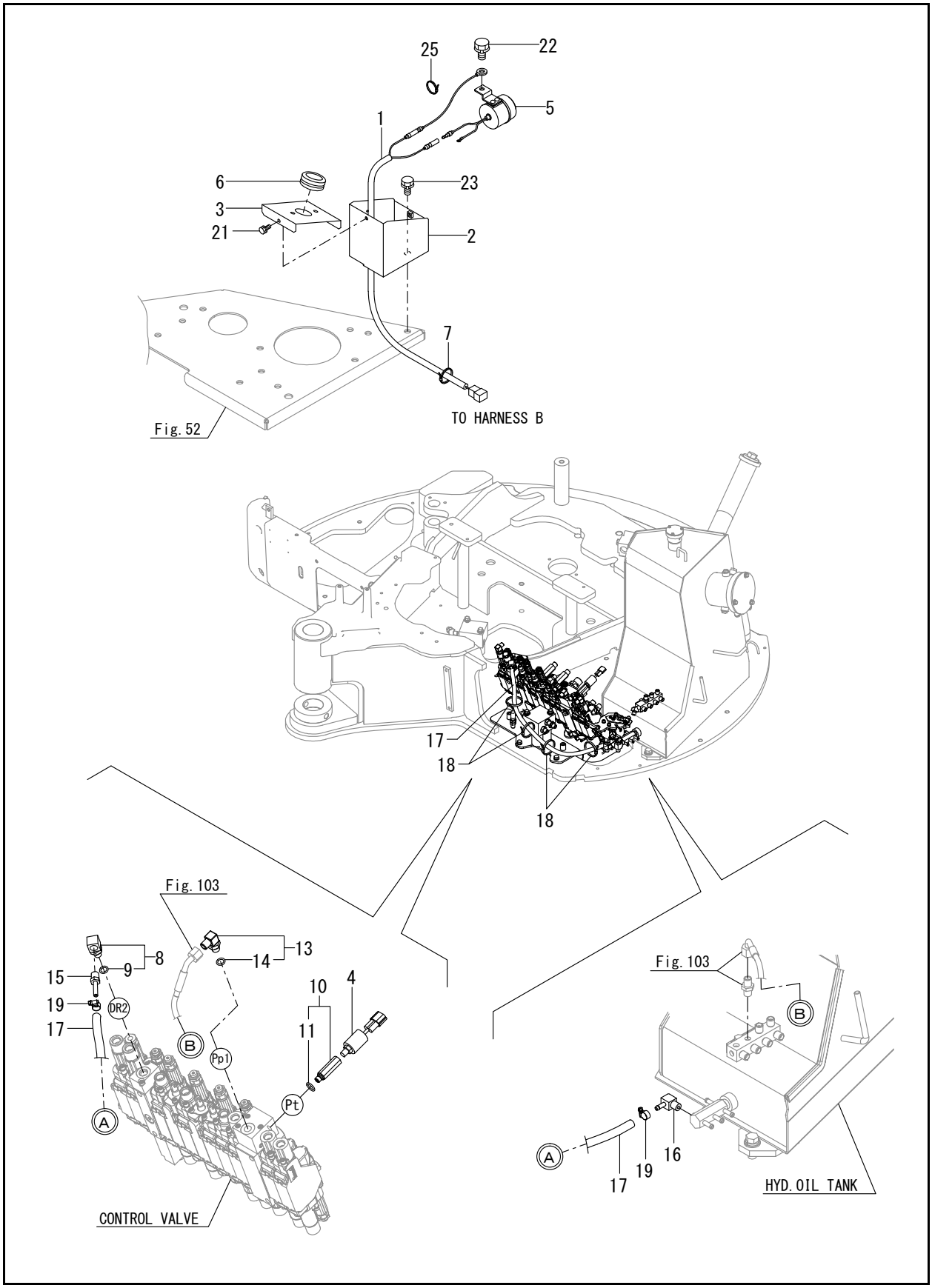
25
22
5
1
6
23
3
21
2
7
TO HARNESS B
Fig. 52
17
18
18
Fig. 103
8
13
9
14
15
10
4
19
DR2
17
11
B
Pp1
Pt
A
CONTROL VALVE
Fig. 103
B
A
17
19
16
HYD. OIL TANK

Ref. No.	Part No.	Description	Qty.
1	50283427	HARNESS,TRAVEL	1
2	50283428	COVER	1
3	50283429	COVER, FLASHER	1
4	50281182	PRESSER SWITCH,ASSY	1
5	50281317	BUZZER, BACK	1
6	50281128	GROMMET 30	1
7	50282352	BAND	3
8	50280806	ELBOW PF1/4	1
9	50282470	O-RING 1B P-11.0	1
10	50286561	CONNECTOR	1
11	50282468	O-RING 1B P-8.0	1
13	50280813	CONNECTOR ASSY, 02FF	1
14	50282607	PACKING, 11.0	1
15	50282732	NIPPLE	1
16	50282842	NIPPLE	1
17	50286468	HOSE	1
18	50286462	BAND	4
19	425-34918	CLAMP 13	2
21	50282501	BOLT M 6X 12	3
22	50282505	BOLT M 8X 12	1
23	50282514	BOLT M10X 16	2
25	50284153	BAND 146	1

FIG. 22 - WINDOW WASHER

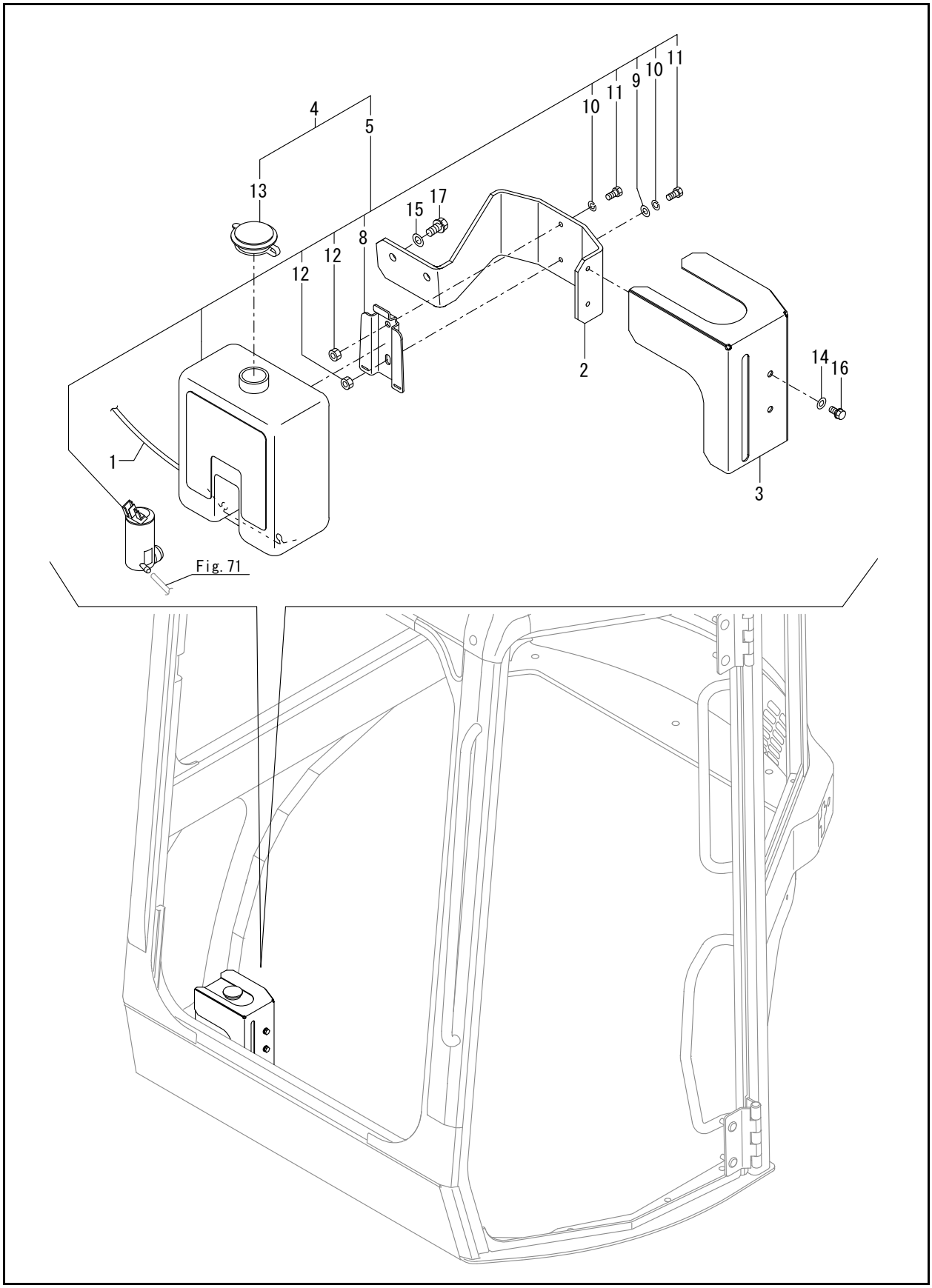

FIG. 22 - WINDOW WASHER

Ref. No.	Part No.	Description	Qty.
1	50283230	HARNESS, WASHER	1
2	50283475	PLATE,WT	1
3	50283476	COVER,WASHER	1
4	50283484	WASHER TANK,PK ASSY	1
5	50283232	WASHER TANK ASSY	1
8	50283234	BRACKET	1
9	50282379	WASHER 6, POLISHED	1
10	425-34891	SPRING WASHER 6	2
11	425-34848	BOLT M6 X 16 PLATED	2
12	138143	NUT	2
13	50283485	PK CAP,WT	1
14	50282379	WASHER 6, POLISHED	4
15	50282380	WASHER 8, POLISHED	2
16	50282500	BOLT M 6X 10	4
17	50282507	BOLT W/WASHER M8X20	2

Z45 - COMPACT EXCAVATOR

FIG. 23 - HEATER

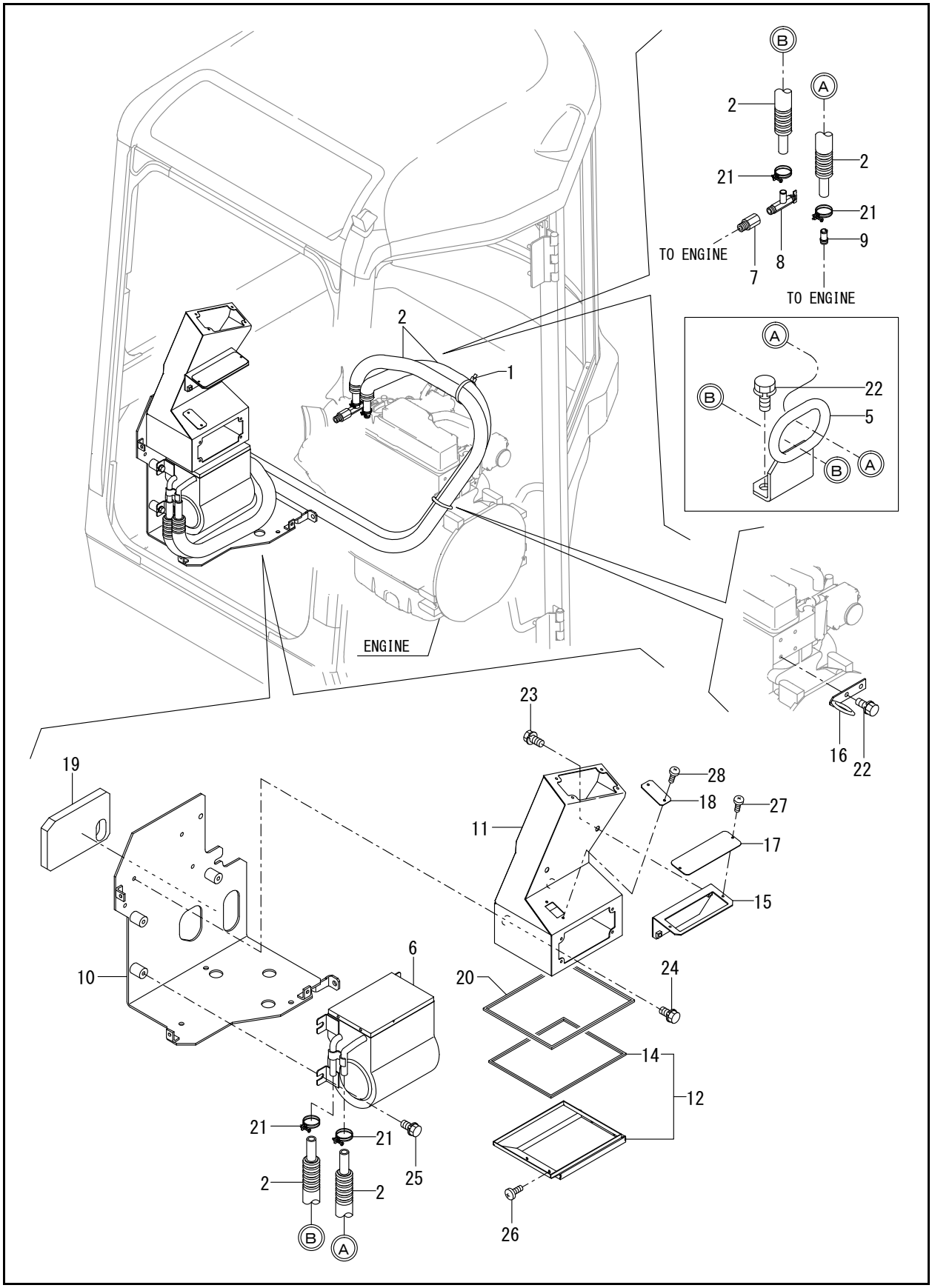

Ref. No.	Part No.	Description	Qty.
1	50280798	BAND 300	1
2	50283433	HOSE ASSY, HEATER	2
5	50283937	GUIDE ASSY,HOSE	1
6	50282964	HEATER	1
7	50283078	JOINT	1
8	50281016	VALVE ASSY, HEATER	1
9	50282711	JOINT 3/8	1
10	50283458	BRACKET ASSY,UNIT	1
11	50283460	DUCT ASSY	1
12	50283470	DUCT, HEATER	1
14	50283268	CUSHION B,BONNET	1
15	50285137	PLATE ASSY	1
16	50282798	GUIDE, HOSE	1
17	50283482	COVER, CONTROLL	1
18	50283483	COVER, DUCT	1
19	50283496	EV,HEATER	1
20	50283268	CUSHION B,BONNET	1
21	50282427	HOSE CLAMP 22	4
22	50282506	BOLT W/WASHER M8X16	2
23	50282533	BOLT M 8X 16	2
24	425-35026	BOLT M8 X 25	2
25	50282538	BOLT M10X 20	3
26	50282592	SCREW, M4X12	4
27	50282592	SCREW, M4X12	2
28	50282592	SCREW, M4X12	2

FIG. 24 - AIR CONDITIONER (ELECTRIC PART)

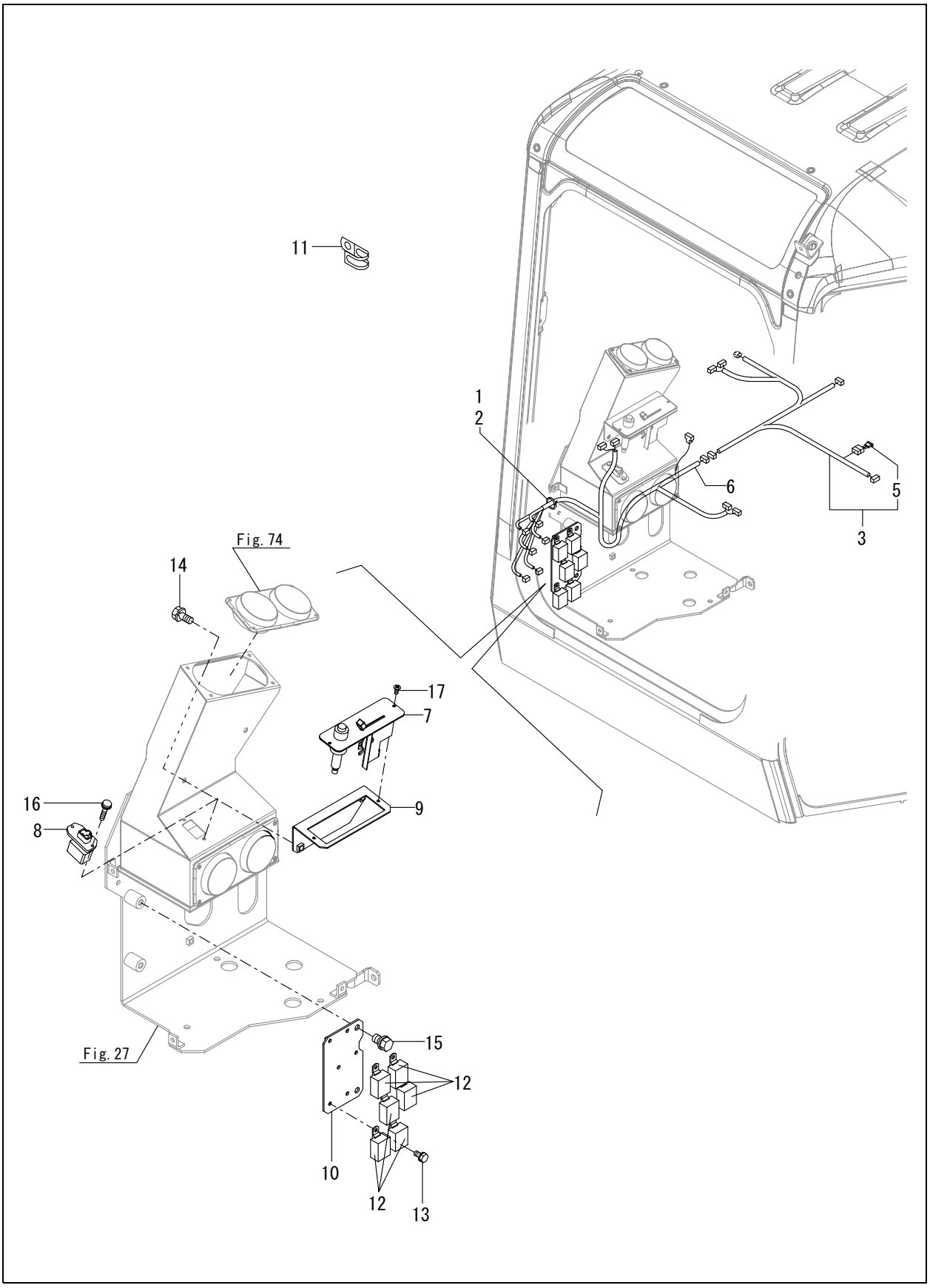

FIG. 24 - AIR CONDITIONER (ELECTRIC PART)

Ref. No.	Part No.	Description	Qty.
1	50280802	BAND	1
2	50280802	BAND	1
3	50283424	HARNESS ASSY,AIR	1
5	50281346	DIODE	1
6	50283426	HARNESS B,AIR	1
7	50284019	PANEL(AC CONTROL)	1
8	50284026	RESISTOR 100-40	1
9	50285137	PLATE ASSY	1
10	50283473	PLATE ASSY,SR	1
11	50284002	CLAMP, WIRE HARNESS	1
12	50282675	RELAY	6
13	50282501	BOLT M 6X 12	6
14	50282506	BOLT W/WASHER M8X16	2
15	50282514	BOLT M10X 16	2
16	50284105	SCREW M4 X 20	2
17	50284105	SCREW M4 X 20	2

Z45 - COMPACT EXCAVATOR

FIG. 25 - AIR CONDITIONER (HEATER HOSE)

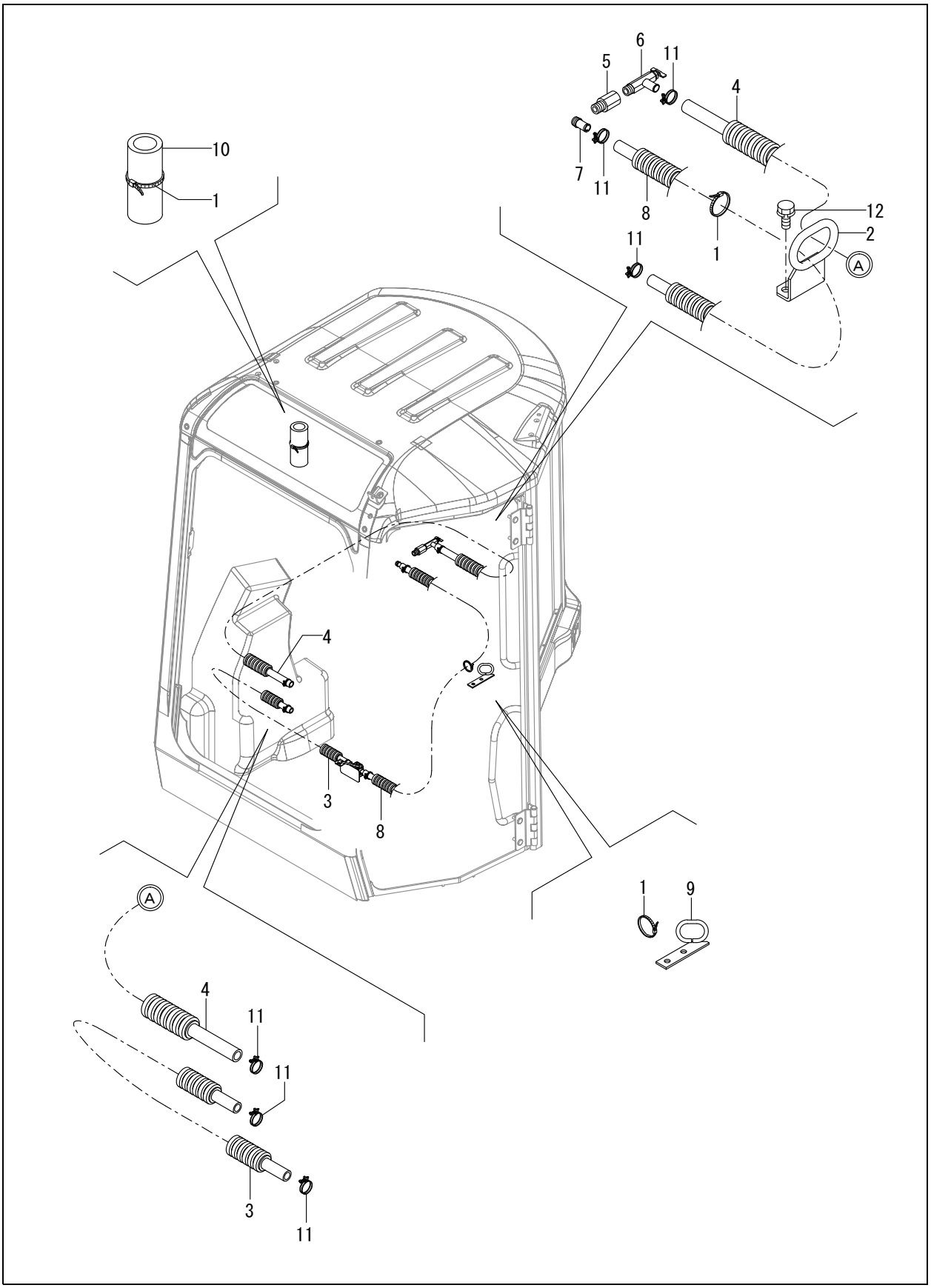

FIG. 25 - AIR CONDITIONER (HEATER HOSE)

Ref. No.	Part No.	Description	Qty.
1	50280798	BAND 300	6
2	50283937	GUIDE ASSY,HOSE	1
3	50283434	HOSE ASSY, HEATER	1
4	50283435	HOSE ASSY, HEATER	1
5	50283078	JOINT	1
6	50281016	VALVE ASSY, HEATER	1
7	50282711	JOINT 3/8	1
8	50282965	HOSE ASSY, HEATER	1
9	50282798	GUIDE, HOSE	1
10	50282972	SOUND SHIELD,HOSE	1
11	50282427	HOSE CLAMP 22	6
12	50282506	BOLT W/WASHER M8X16	2

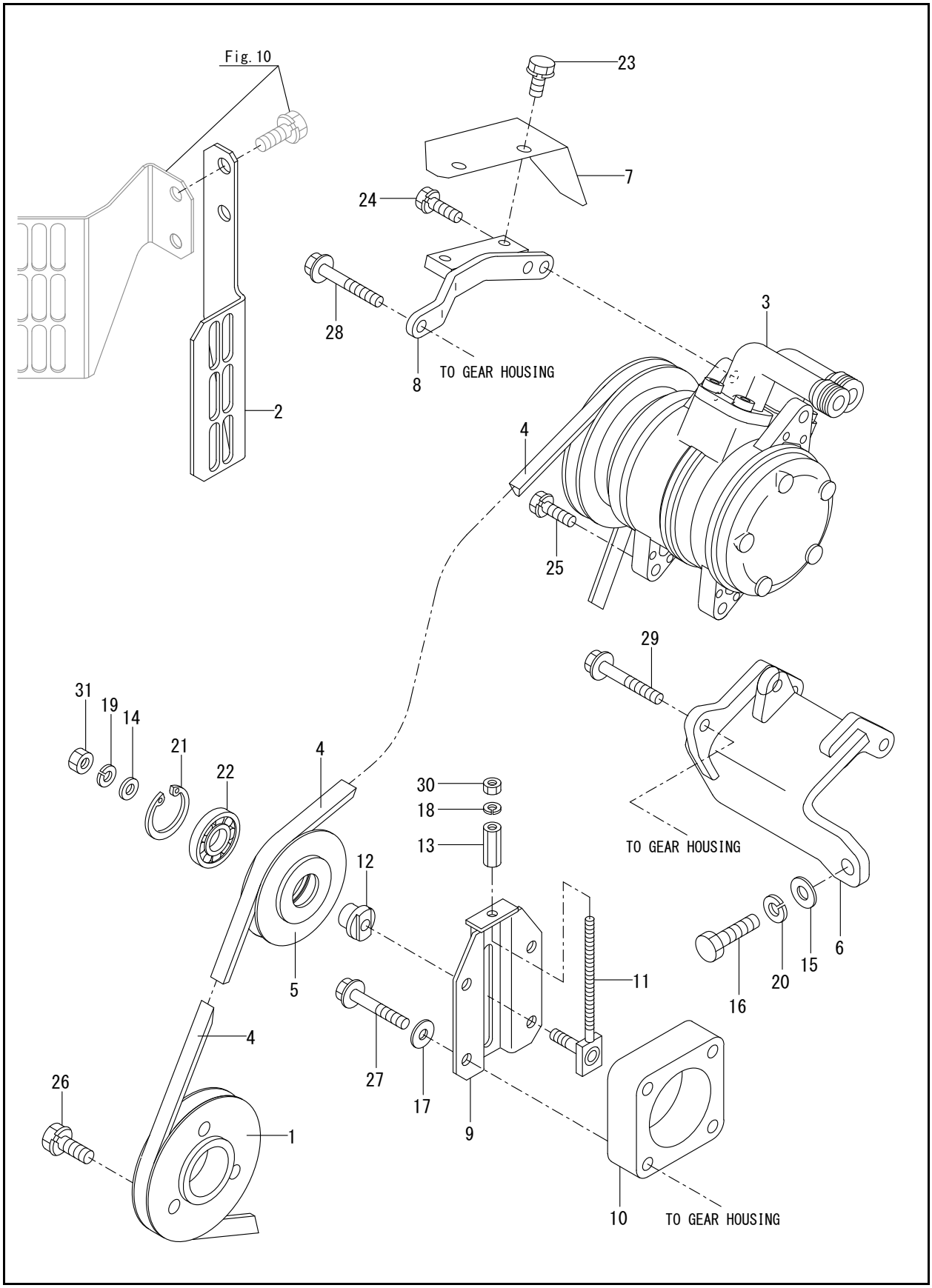
Fig. 10
23
7
24
28
8
TO GEAR HOUSING
2
3
4
25
29
TO GEAR HOUSING
31
19
14
21
22
4
30
18
13
12
5
4
26
1
27
17
9
11
16
20
15
6
10
TO GEAR HOUSING

FIG. 26 - AIR CONDITIONER (ENGINE RELATED)

Ref. No.	Part No.	Description	Qty.
1	50283370	PULLY	1
2	50283384	GUARD	1
3	50283079	COMPRESSOR	1
4	50283080	V-BELT	1
5	50282895	PULLEY, TENSION (87	1
6	50283941	BRACKET ASSY,COMP	1
7	50283082	PLATE D	1
8	50283263	PLATE ASSY, F	1
9	50282795	BRACKET ASSY	1
10	50283260	PLATE	1
11	50282796	ADJUSTER ASSY	1
12	50282797	BOSS	1
13	50282784	NUT	1
14	50284006	SPRING WASHER	1
15	50280803	SEAT, SPRING	1
16	50282768	BOLT M10X45	1
17	425-34750	WASHER 8/SEAL	4
18	425-34891	SPRING WASHER 6	1
19	50282392	WASHER, 8	1
20	50282393	SPRING WASHER 10	1
21	50284048	CIRCLIP 40(H)	1
22	50284071	BALL BEARING	1
23	50282506	BOLT W/WASHER M8X16	2
24	50282508	BOLT M 8X 25	1
25	50282509	BOLT M 8X 30	2
26	50282515	BOLT W/WASHER M10X20	2
27	425-34766	BOLT M8 X 50 PLATED	4
28	425-34838	BOLT M8 X 60 PLATED	1
29	425-34930	BOLT M8 X 65 PLATED	1
30	138143	NUT	1
31	50282596	NUT M 8	1

Z45 - COMPACT EXCAVATOR

FIG. 27 - AIR CONDITIONER (CABIN RELATED)

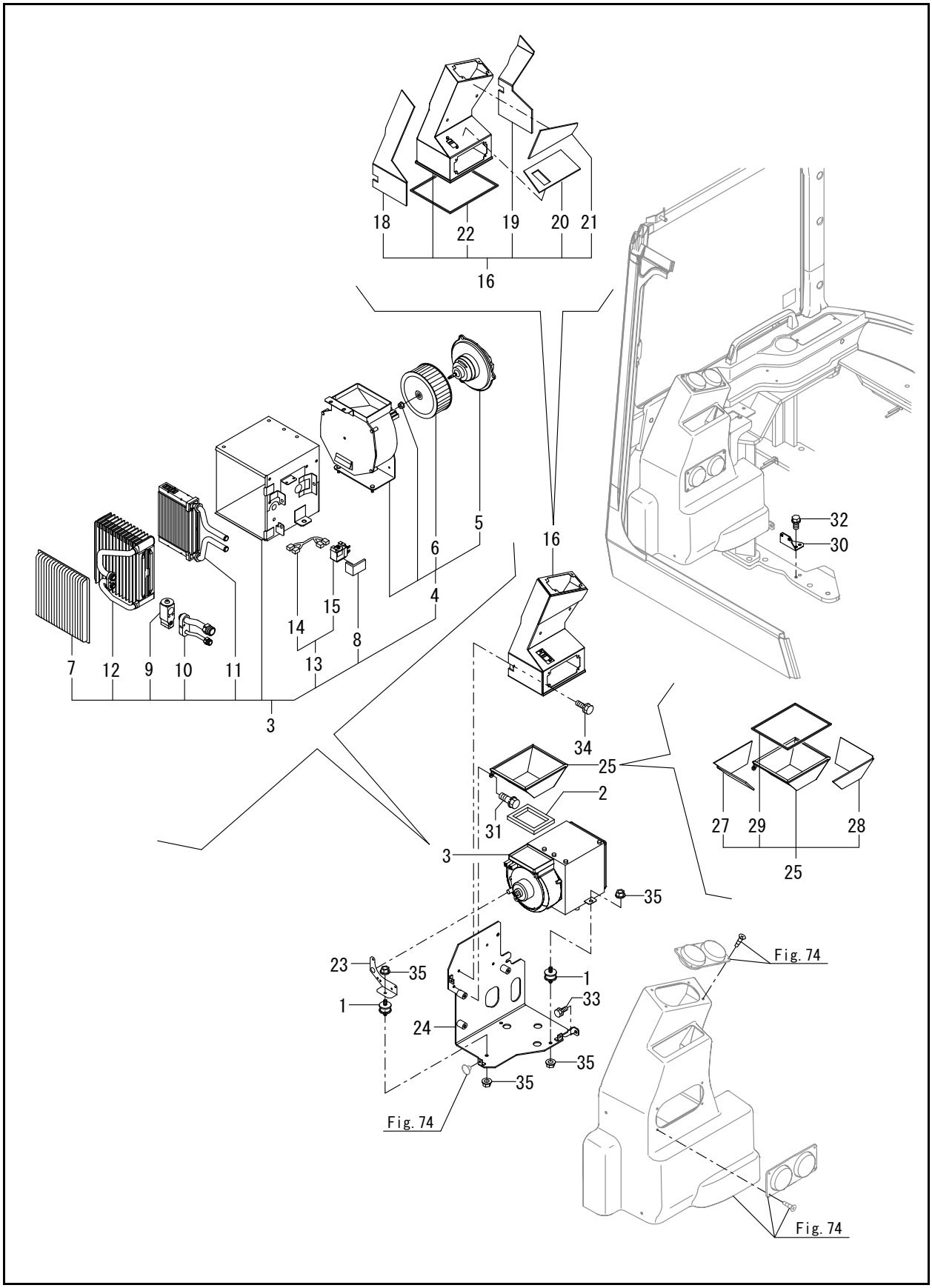

FIG. 27 - AIR CONDITIONER (CABIN RELATED)

Ref. No.	Part No.	Description	Qty.
1	50281059	MOUNT	3
2	50281227	SEAL A,DUCT	1
3	50283938	AIR CON, UNIT ASSY	1
4	50283939	BLOWER ASSY	1
5	50284032	MOTOR	1
6	50284038	FAN, BLOWER	1
7	50284030	FILTER	1
8	50284031	GASKET	1
9	50284033	VALVE EXPANSION	1
10	50284034	TUBE ASSY	1
11	50284035	HEATER CORE	1
12	50284036	EVAPORATOR	1
13	50284009	THERMOSTAT KIT	1
14	50284015	CABLE, THERMOSTAT	1
15	50284011	THERMOSTAT ASSY	1
16	50283451	DUCT ASSY(73)	1
18	50283488	SEAL C	1
19	50283489	SEAL D	1
20	50283490	SEAL E	1
21	50283491	SEAL F	1
22	50283268	CUSHION B,BONNET	1
23	50283456	BRACKET,UNIT	1
24	50283458	BRACKET ASSY,UNIT	1
25	50283469	DUCT U ASSY	1
27	50283486	SEAL A	1
28	50283487	SEAL B	1
29	50283268	CUSHION B,BONNET	1
30	50283472	BRACKET,WV	1
31	50282507	BOLT W/WASHER M8X20	2
32	50282515	BOLT W/WASHER M10X20	2
33	50282515	BOLT W/WASHER M10X20	3
34	425-35026	BOLT M8 X 25	2
35	50282548	NUT M 8	6

FIG. 28 - AIR CONDITIONER (CONDENSER RELATED)

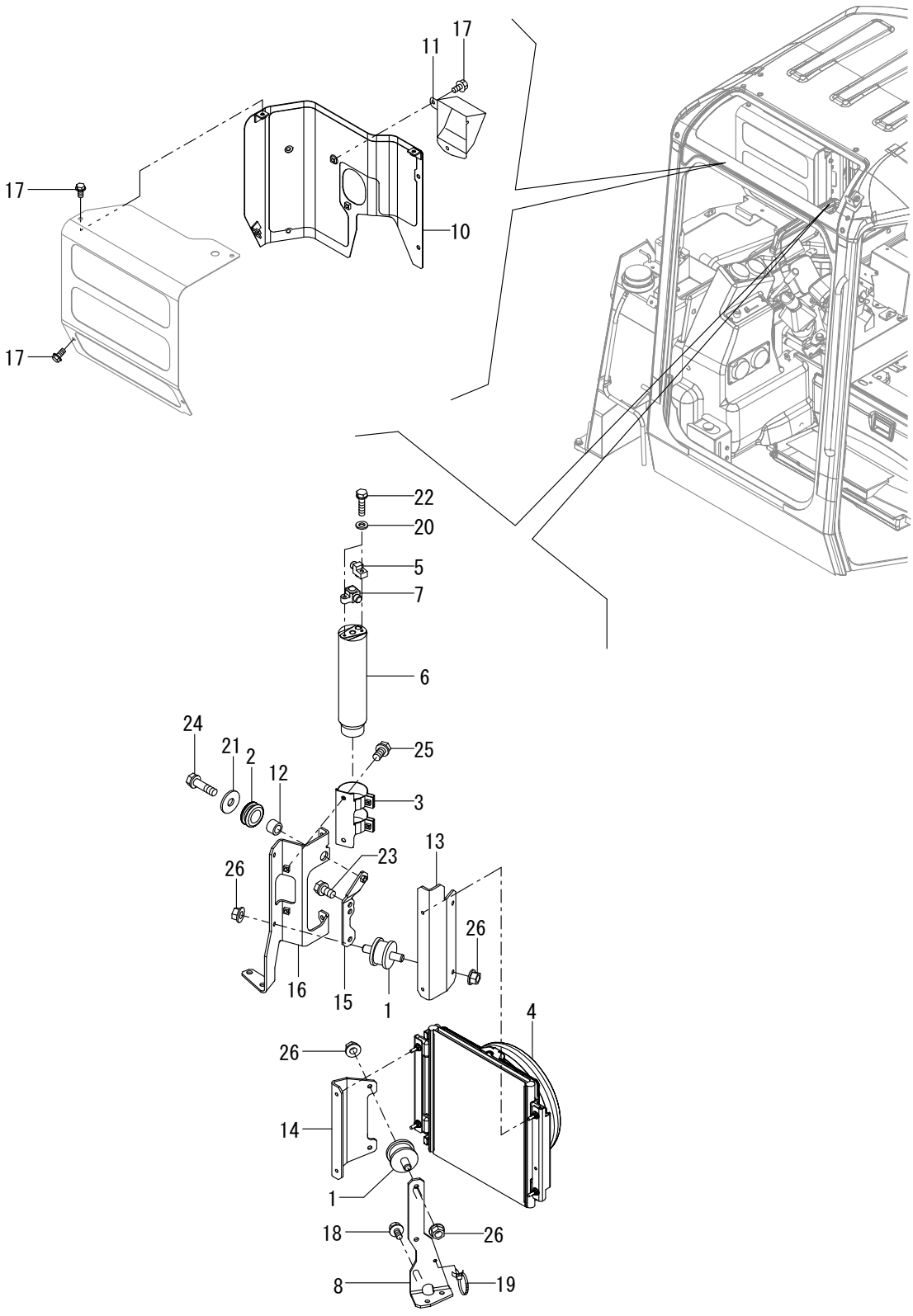

FIG. 28 - AIR CONDITIONER (CONDENSER RELATED)

Ref. No.	Part No.	Description	Qty.
1	50281059	MOUNT	4
2	50283271	GROMMET 15X20	1
3	50280857	BRACKET	1
4	50283438	CONDENSER ASSY	1
5	50283081	CONNECTOR	1
6	50282371	RECEIVER DRYER	1
7	50282372	JOINT (RECEIVER)	1
8	50283462	BRACKET R ASSY,CON	1
10	50283943	COVER B ASSY, COND	1
11	50283944	COVER,CON	1
12	50283465	COLLAR 9.2X13.8X10	1
13	50283466	BRACKET,REC	1
14	50283468	BRACKET,COND	1
15	50283477	STAY ASSY,COND	1
16	50283479	BRAKET L ASSY,COND	1
17	50281318	BOLT 8X 16	8
18	50281318	BOLT 8X 16	2
19	50284027	LAMP, BAND B	1
20	50282379	WASHER 6, POLISHED	2
21	186593	WASHER 8	1
22	50284096	BOLT M6 X 25	2
23	50282506	BOLT W/WASHER M8X16	2
24	50282509	BOLT M 8X 30	1
25	50282533	BOLT M 8X 16	2
26	50282548	NUT M 8	8

FIG. 29 - AIR CONDITIONER (PIPING)

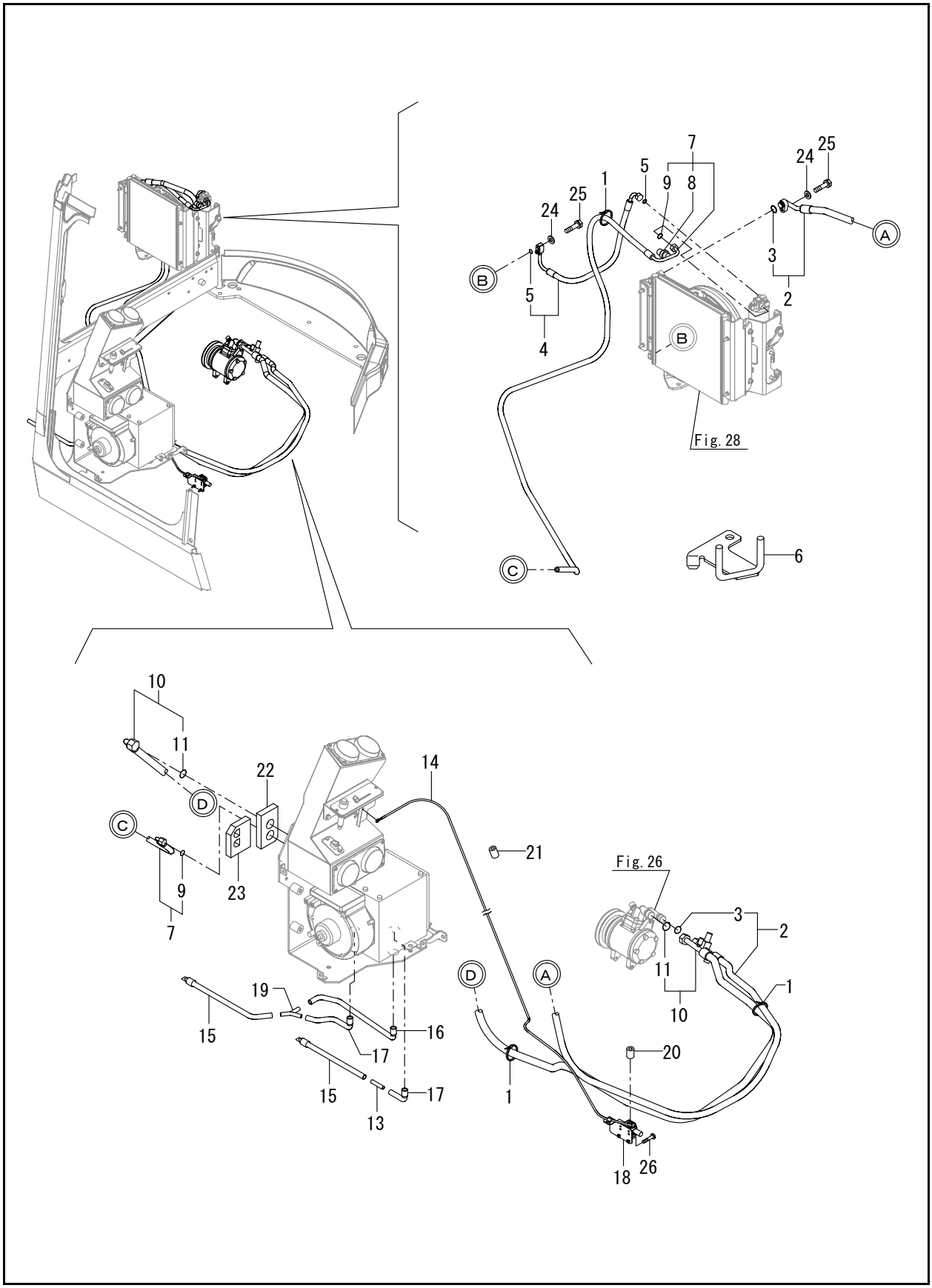

FIG. 29 - AIR CONDITIONER (PIPING)

Ref. No.	Part No.	Description	Qty.
1	50280798	BAND 300	1
2	50283445	HOSE	1
3	50284013	O-RING	2
4	50283446	HOSE	1
5	50284012	O-RING	2
6	50283940	GUIDE ASSY,AC HOSE	1
7	50283447	HOSE	1
8	50283449	SWITCH,PRESSURE	1
9	50284012	O-RING	2
10	50283448	HOSE	1
11	50284014	O-RING	2
13	50283439	CONNECTOR	1
14	50283440	WIRE	1
15	50283441	DRAIN HOSE 830	2
16	50283442	DRAIN HOSE 590	1
17	50283443	DRAIN HOSE 420	2
18	50284025	VALVE,WATER	1
19	50284022	JOINT Y,DRAIN	1
20	50283455	BUSHING	1
21	50283455	BUSHING	1
22	50283493	EV,AIR CON B	1
23	50283495	EV,AIR CON B	1
24	50282379	WASHER 6, POLISHED	2
25	50284096	BOLT M6 X 25	2
26	50284105	SCREW M4 X 20	2

FIG. 30 - SPROCKET

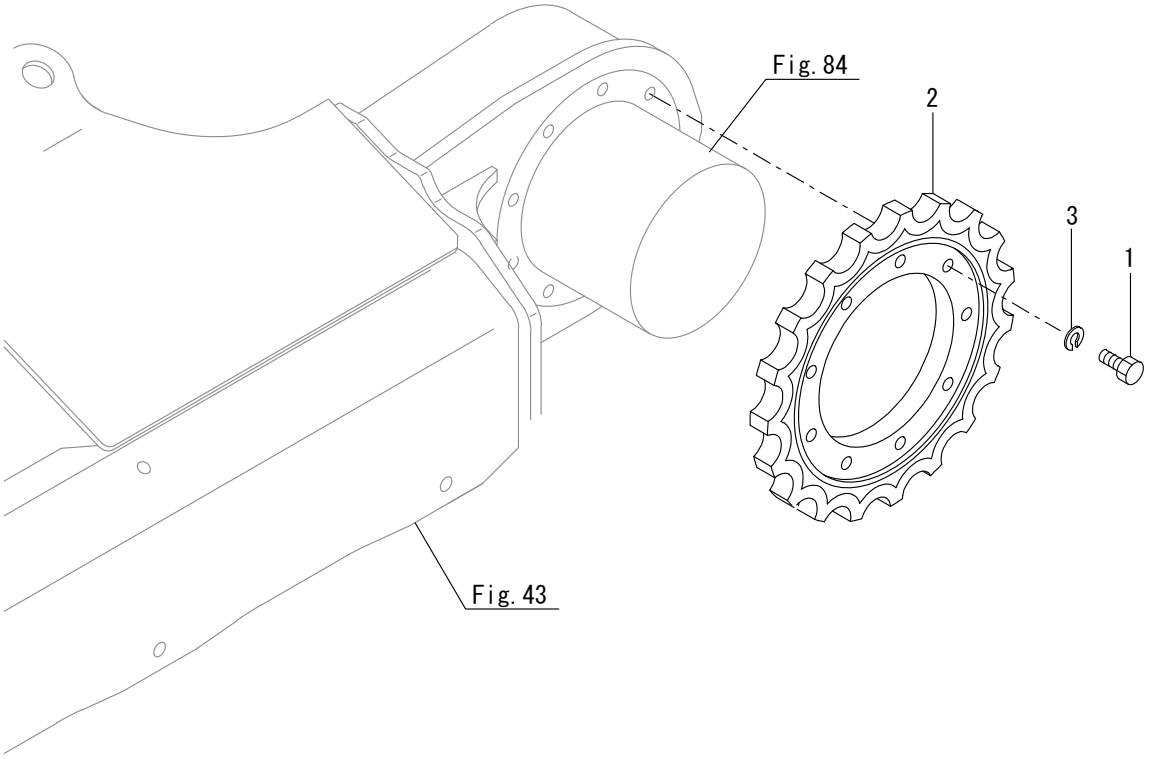

FIG. 30 - SPROCKET

Ref. No.	Part No.	Description	Qty.
1	50281066	BOLT 14X35	18
2	50282696	SPROCKET 19	2
3	188712	SPRING/WASHER 14	18

FIG. 31 - IDLER & ADJUST

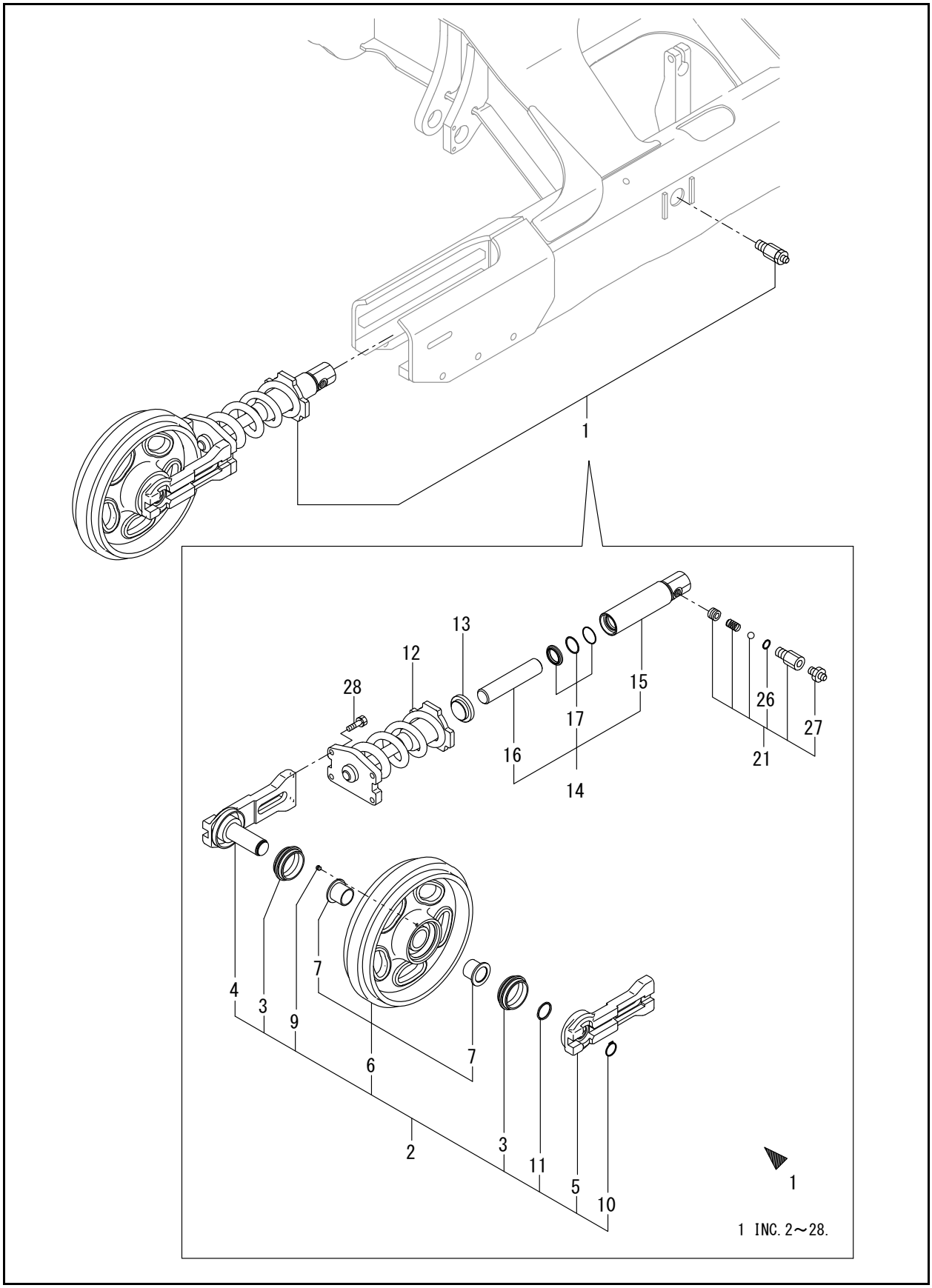

Ref. No.	Part No.	Description	Qty.
1	50284143	IDLER ASSY, IRON	2
2	50283085	IDLER,FRONT ASSY	2
3	50283086	SEAL	4
4	50283088	SHAFT ASSY, IDLER	2
5	50283090	SEAL COVER B, IDLER	2
6	50283092	IDLER ASSY,340	2
7	50282712	BUSHING 40	4
9	50282355	PLUG PT1/8	2
10	50282400	CIRCLIP 35	2
11	50284081	O-RING 1A G-40.0	2
12	50283095	SPRING	2
13	50282697	HOLDER, ADJUSTER	2
14	50282698	CYLINDER ASSY,ADJUST	2
15	50282699	TUBE ASSY, ADJUST	2
16	50282700	PISTON	2
17	50282701	ADJUST SEAL SET	2
21	50280783	VALVE ASSY, NIPPLE	2
26	50282471	O-RING 1B P-14.0	2
27	50282497	NIPPLE PT1/8,GREASE	2
28	50282526	BOLT M12X 40	8

FIG. 32 - TRACK ROLLER

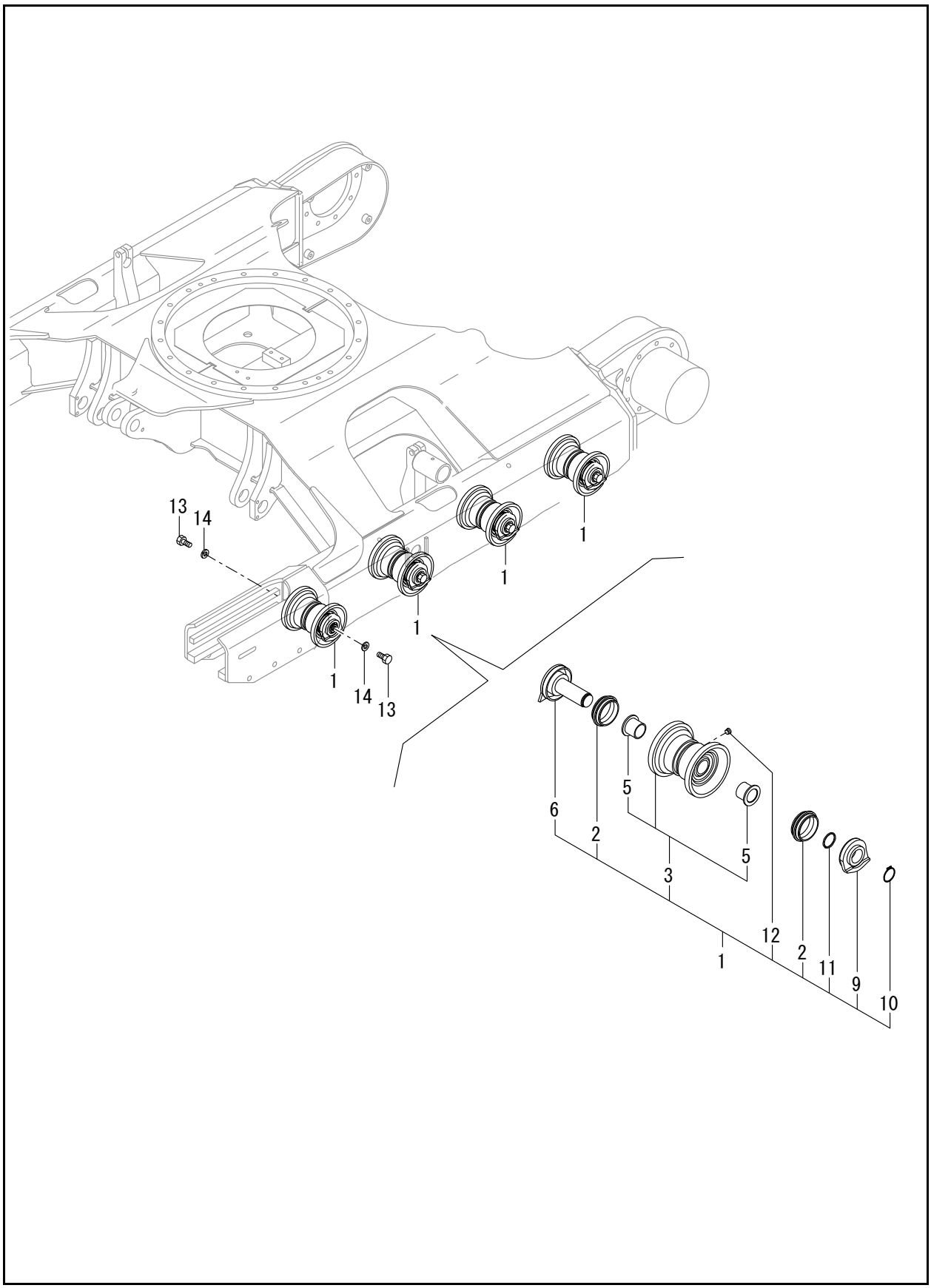

FIG. 32 - TRACK ROLLER

Ref. No.	Part No.	Description	Qty.
1	50283094	TRACK ROLLER ASSY	8
2	50282966	FLOATING SEAL	16
3	50282852	ROLLER ASSY	8
5	50282857	BUSHING	16
6	50282854	SHAFT ASSY,ROLLER	8
9	50282856	COVER, SEAL	8
10	50284045	CIRCLIP 30	8
11	50282480	O-RING 1B P-29.0	8
12	50282621	PLUG PT1/8	8
13	50283253	BOLT, M16X35	16
14	50282396	SPRING WASHER 16	16

FIG. 33 - CARRIER ROLLER

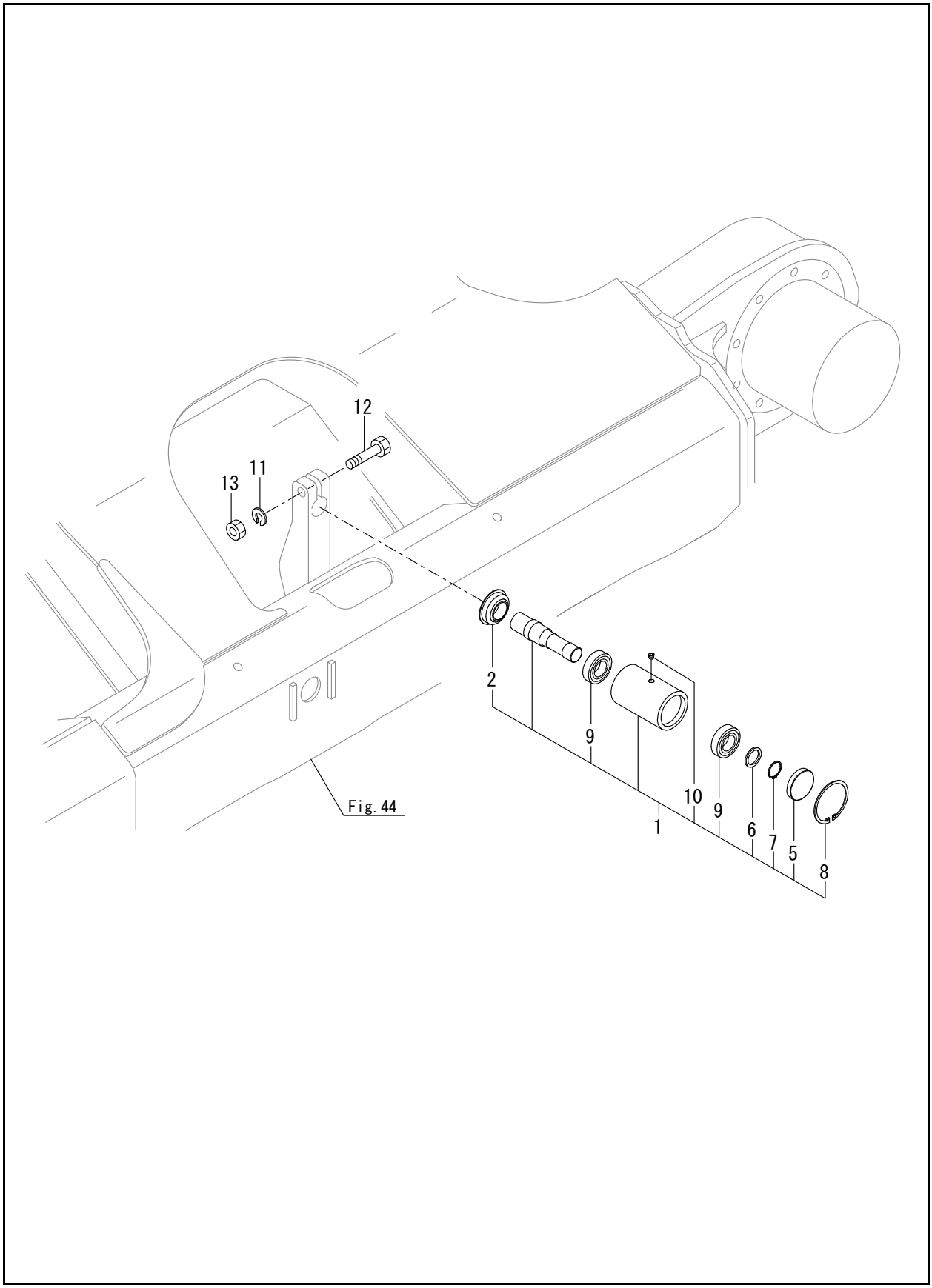

FIG. 33 - CARRIER ROLLER

Ref. No.	Part No.	Description	Qty.
1	50283239	ROLLER ASSY, CARRIER	2
2	50282785	SEAL, OIL	2
5	50283241	CAP, CARRIER ROLLER	2
6	50283242	WASHER, CARRIER	2
7	50284045	CIRCLIP 30	2
8	50284049	RING, 62	2
9	50284073	BALL BEARING	4
10	50282621	PLUG PT1/8	2
11	50282396	SPRING WASHER 16	2
12	50282573	BOLT M16X 85 PLATED	2
13	50282599	NUT M16	2

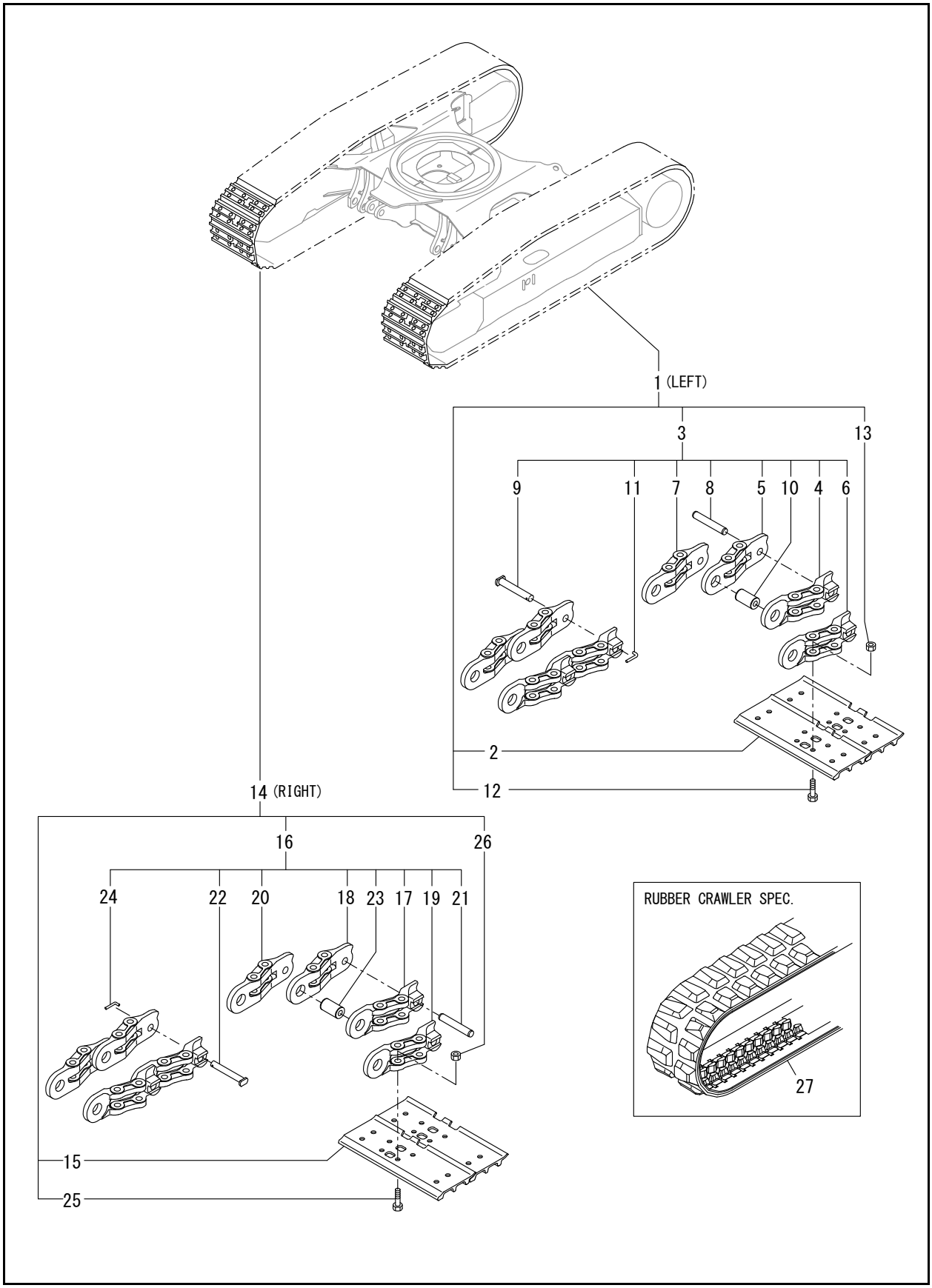
1 (LEFT)
3
13
9
11
7
8
5
10
4
6
2
12
14 (RIGHT)
16
26
24
22
20
18
23
17
19
21
15
25
RUBBER CRAWLER SPEC.
27

Ref. No.	Part No.	Description	Qty.
1	50283096	SHOE ASSY, TRACK	1
2	50283097	PLATE, SHOE 350L	40
3	50283100	LINK ASSY	1
4	50283101	LINK(L),TRACK	39
5	50283102	LINK(R),TRACK	39
6	50283103	LINK(L),MASTER	1
7	50283104	LINK(R),MASTER	1
8	50283105	PIN,TRACK	39
9	50283106	PIN,MASTER	1
10	50283107	BUSHING	40
11	50283108	PIN,LOCK 6X40	1
12	50283109	BOLT, SHOE	160
13	50283110	NUT, SHOE	160
14	50283098	SHOE ASSY, TRACK	1
15	50283099	PLATE, SHOE 350R	40
16	50283100	LINK ASSY	1
17	50283101	LINK(L),TRACK	39
18	50283102	LINK(R),TRACK	39
19	50283103	LINK(L),MASTER	1
20	50283104	LINK(R),MASTER	1
21	50283105	PIN,TRACK	39
22	50283106	PIN,MASTER	1
23	50283107	BUSHING	40
24	50283108	PIN,LOCK 6X40	1
25	50283109	BOLT, SHOE	160
26	50283110	NUT, SHOE	160
27	50282858	CRAWLER, RUBBER	2

FIG. 35 - VALVE PLATE

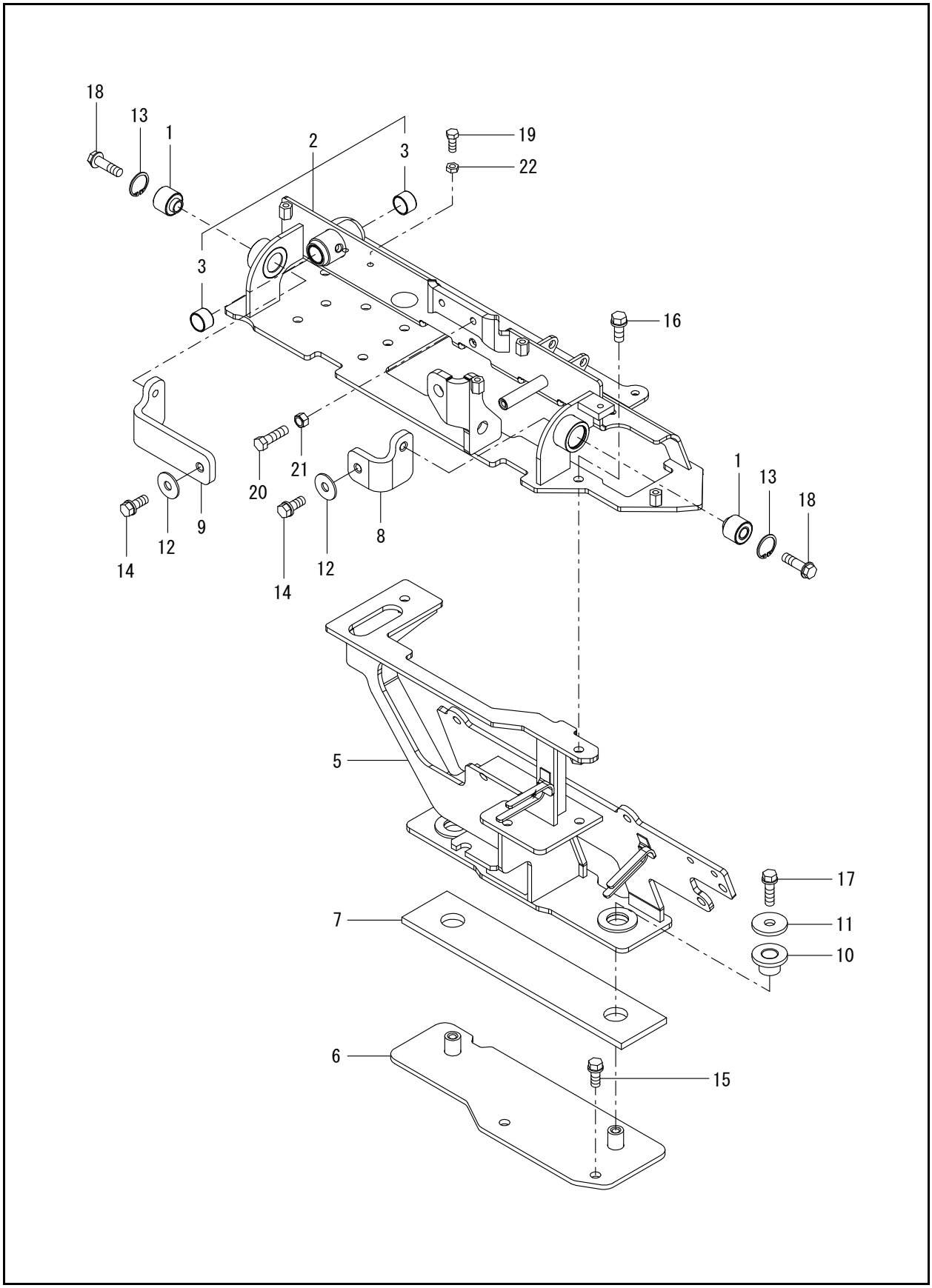

Ref. No.	Part No.	Description	Qty.
1	50282799	CUSHION	2
2	50286555	BRACKET	1
3	50280810	BUSHING 2015	2
5	50286556	BRACKET	1
6	50283514	BRACKET ASSY, DAMPER	1
7	50283515	PAD,ABSOBER	1
8	50283516	STAY, DAMPER	1
9	50283517	STAY, DAMPER	1
10	50283248	GROMMET 18X24X40	2
11	50283249	WASHER 12X40X4.5	2
12	50282387	WASHER 10	2
13	50284047	CIRCLIP 28	2
14	50282516	BOLT W/WASHER M10X25	2
15	50282516	BOLT W/WASHER M10X25	2
16	50282516	BOLT W/WASHER M10X25	2
17	50282518	BOLT M10X 35	2
18	138135	BOLT M10 X 35 PLATED	2
19	50284115	BOLT M8 X 20 PLATED	2
20	50284118	BOLT M10 X 30 PLATED	2
21	50282597	NUT 10	2
22	425-34794	NUT, LOCK M8 PLATED	2

FIG. 36 - CONTROL EQUIPMENT (TRAVEL LEVER)

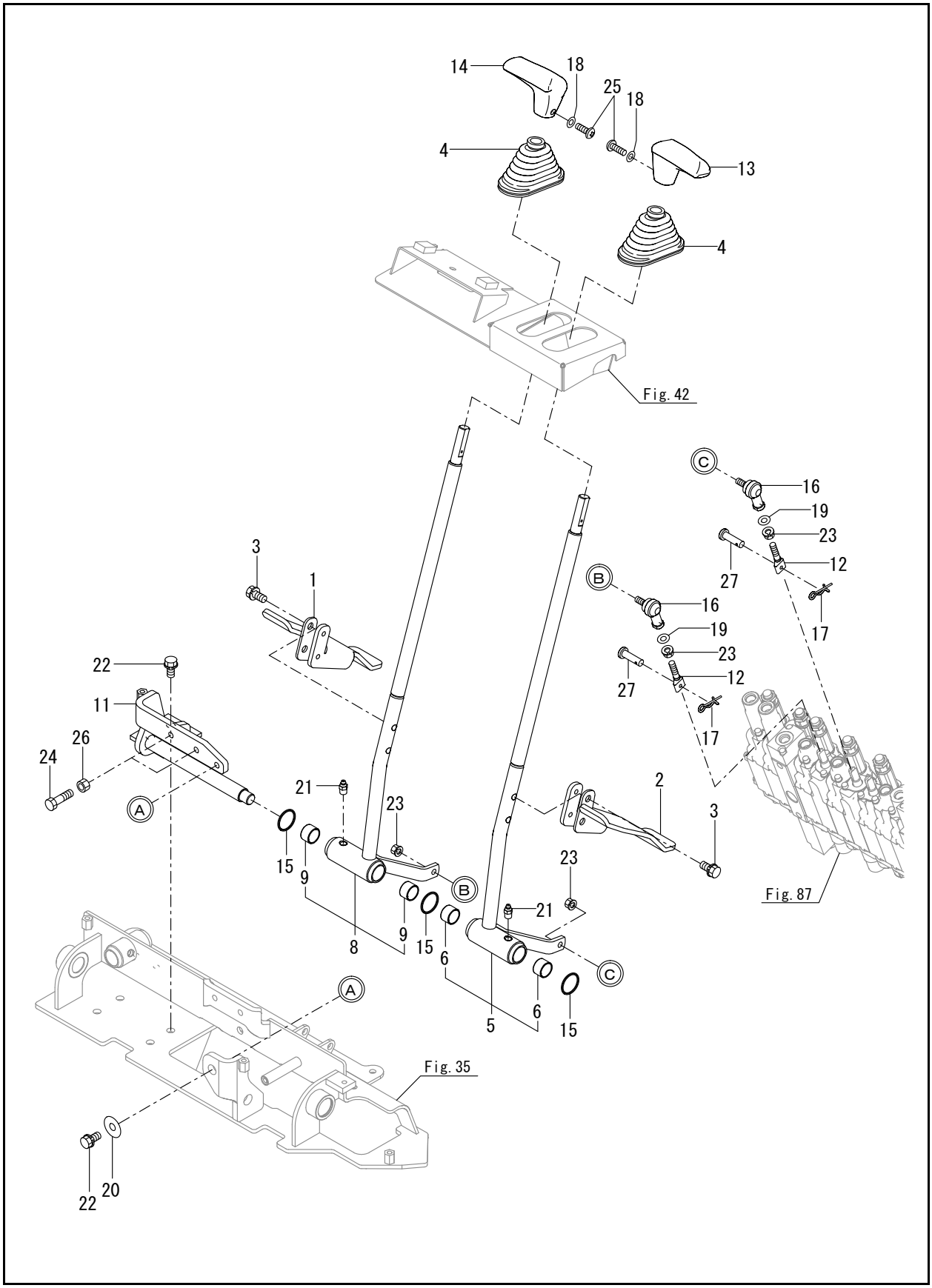

FIG. 36 - CONTROL EQUIPMENT (TRAVEL LEVER)

Ref. No.	Part No.	Description	Qty.
1	50283497	PEDAL, TRACK	1
2	50283498	PEDAL, TRACK	1
3	425-34760	BOLT M8 X 30 PLATED	4
4	50282725	BOOTS	2
5	50283499	LEVER, TRACK	1
6	50280810	BUSHING 2015	2
8	50283500	LEVER, TRACK	1
9	50280810	BUSHING 2015	2
11	50283507	BRACKET ASSY,TRUCK	1
12	50282736	ROD(C), SPOOL	2
13	50280939	GRIP L, DRIVE	1
14	50280940	GRIP R, DRIVE	1
15	50280793	O-RING 27X5.7	3
16	50282702	ELBOW	2
17	50284017	PIN 6,COME-OFF SNAP	2
18	197782	WASHER 4	2
19	138515	WASHER 8	2
20	50282387	WASHER 10	1
21	50282497	NIPPLE PT1/8,GREASE	2
22	50282516	BOLT W/WASHER M10X25	3
23	50282548	NUT M 8	4
24	50284120	BOLT M10 X 35 PLATED	2
25	50282592	SCREW, M4X12	2
26	50282597	NUT 10	2
27	50284148	PIN 4.75X14	2

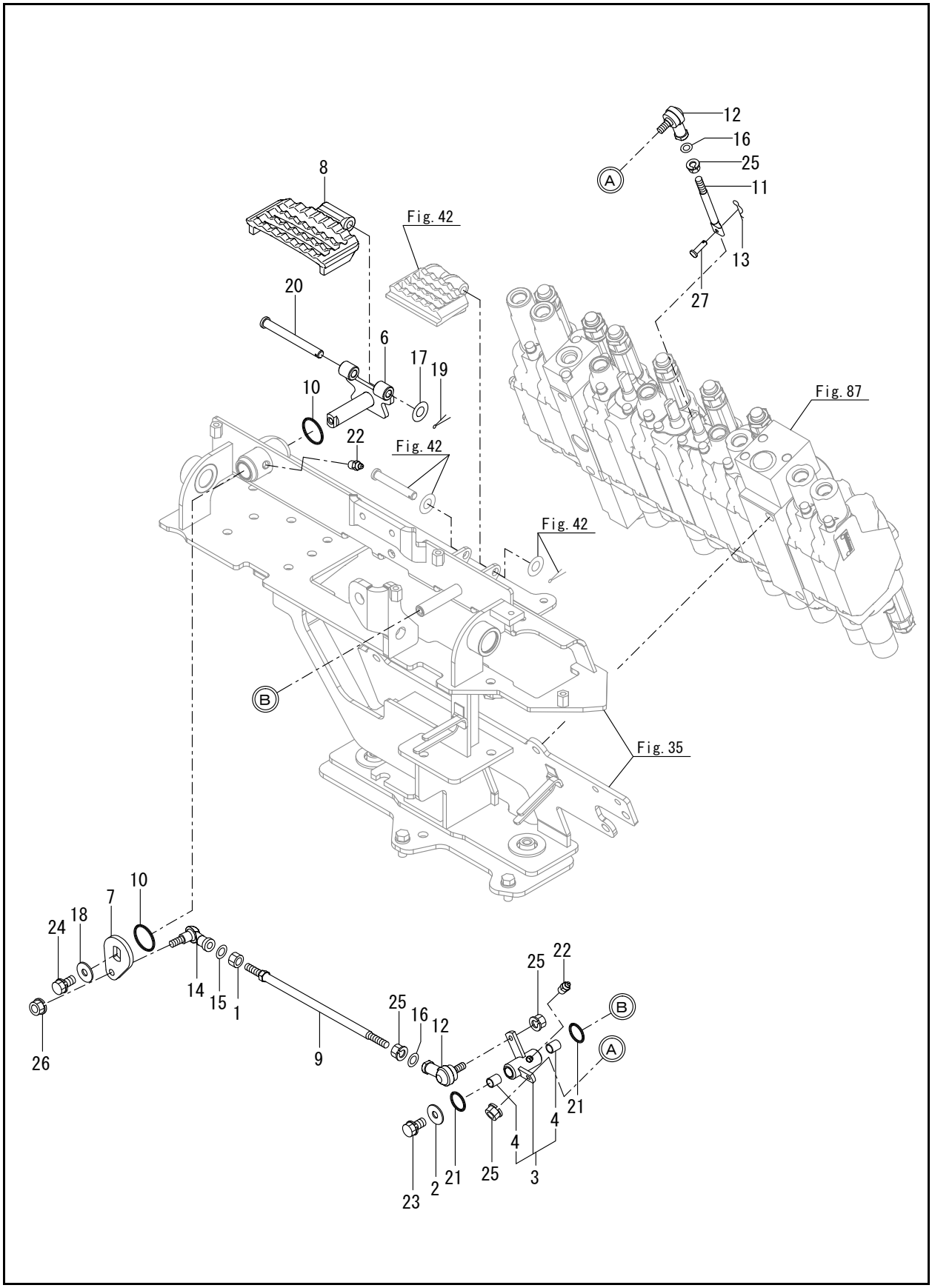
12
16
25
11
13
27
8
Fig. 42
20
6
17
19
10
22
Fig. 42
Fig. 87
Fig. 42
B
Fig. 35
10
7
24
18
14
15
1
9
25
16
12
26
25
22
B
A
21
4
4
3
25
21
2
23

FIG. 37 - CONTROL EQUIPMENT (SWING PEDAL)

Ref. No.	Part No.	Description	Qty.
1	50284001	LS-NUT 8	1
2	50284006	SPRING WASHER	1
3	50283501	LINK ASSY, SWING	1
4	50282726	BUSHING 1415	2
6	50283502	PIN ASSY,SWING	1
7	50283503	PLATE, SWING	1
8	50283505	PEDAL	1
9	50282734	ROD	1
10	50280793	O-RING 27X5.7	2
11	50282771	ROD 98.5	1
12	50282702	ELBOW	2
13	50284017	PIN 6,COME-OFF SNAP	1
14	50284021	BALL BL8DL, LINK	1
15	138515	WASHER 8	1
16	138515	WASHER 8	2
17	138111	WASHER/POLISHED	1
18	186593	WASHER 8	1
19	50282418	COTTER PIN 2.0X20	1
20	50284059	PIN, H10X90	1
21	50284076	O-RING 1A P-21.0	2
22	50282497	NIPPLE PT1/8,GREASE	2
23	50282506	BOLT W/WASHER M8X16	1
24	50282506	BOLT W/WASHER M8X16	1
25	50282548	NUT M 8	4
26	50282548	NUT M 8	1
27	50284148	PIN 4.75X14	1

FIG. 38 - CONTROL EQUIPMENT (LOW-HIGH PEDAL)

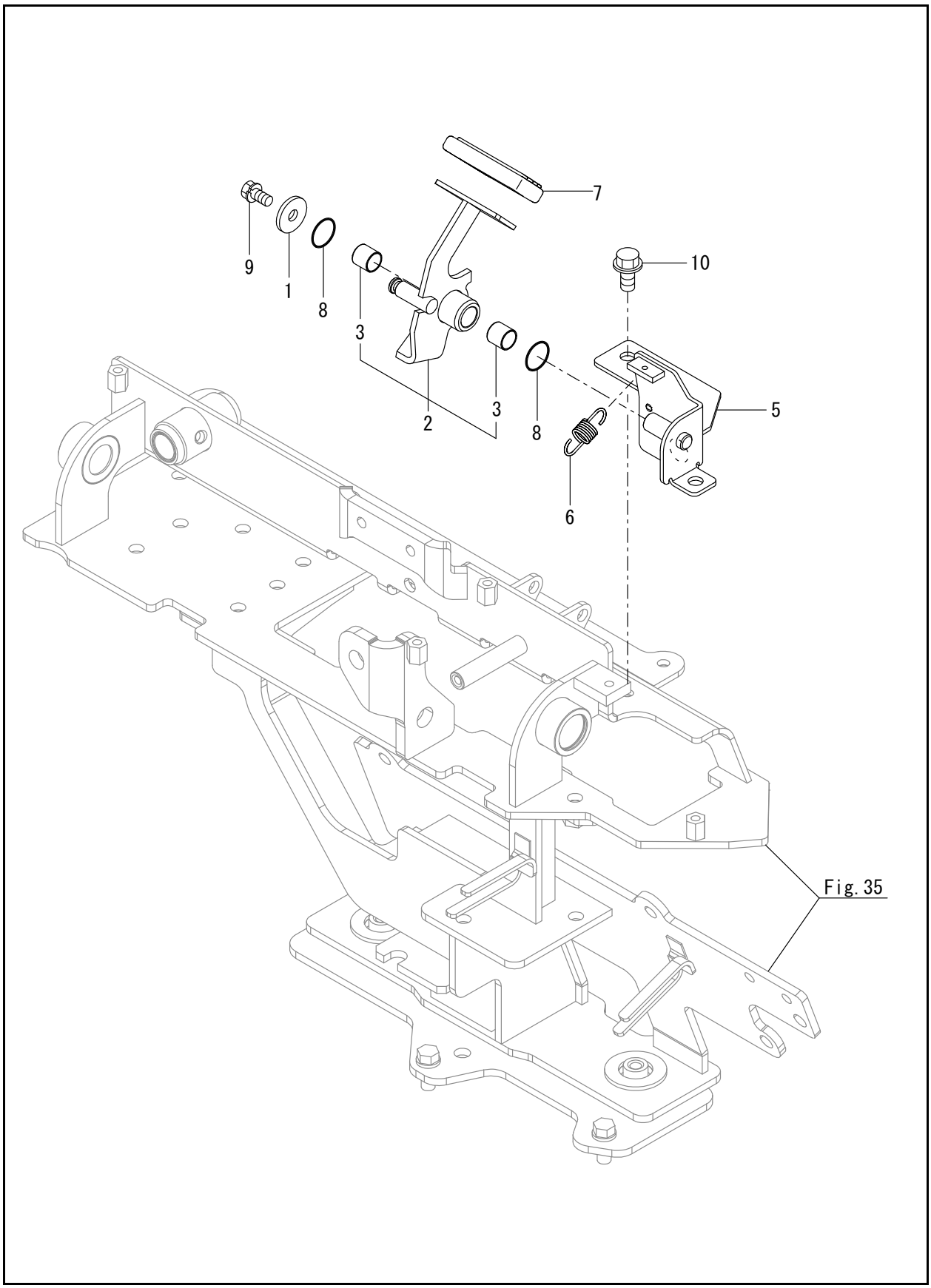

FIG. 38 - CONTROL EQUIPMENT (LOW-HIGH PEDAL)

Ref. No.	Part No.	Description	Qty.
1	50284006	SPRING WASHER	1
2	50283509	PEDAL ASSY,2SPEED	1
3	50282726	BUSHING 1415	2
5	50283511	BRACKET ASSY,2SPEED	1
6	50283512	SPRING,2SPEED	1
7	50282967	PAD,PEDAL	1
8	50284076	O-RING 1A P-21.0	2
9	50282506	BOLT W/WASHER M8X16	1
10	425-34733	BOLT M8 X 16 PLATED	2

FIG. 39 - CONTROL EQUIPMENT (LOCK LEVER & STAND : LEFT)

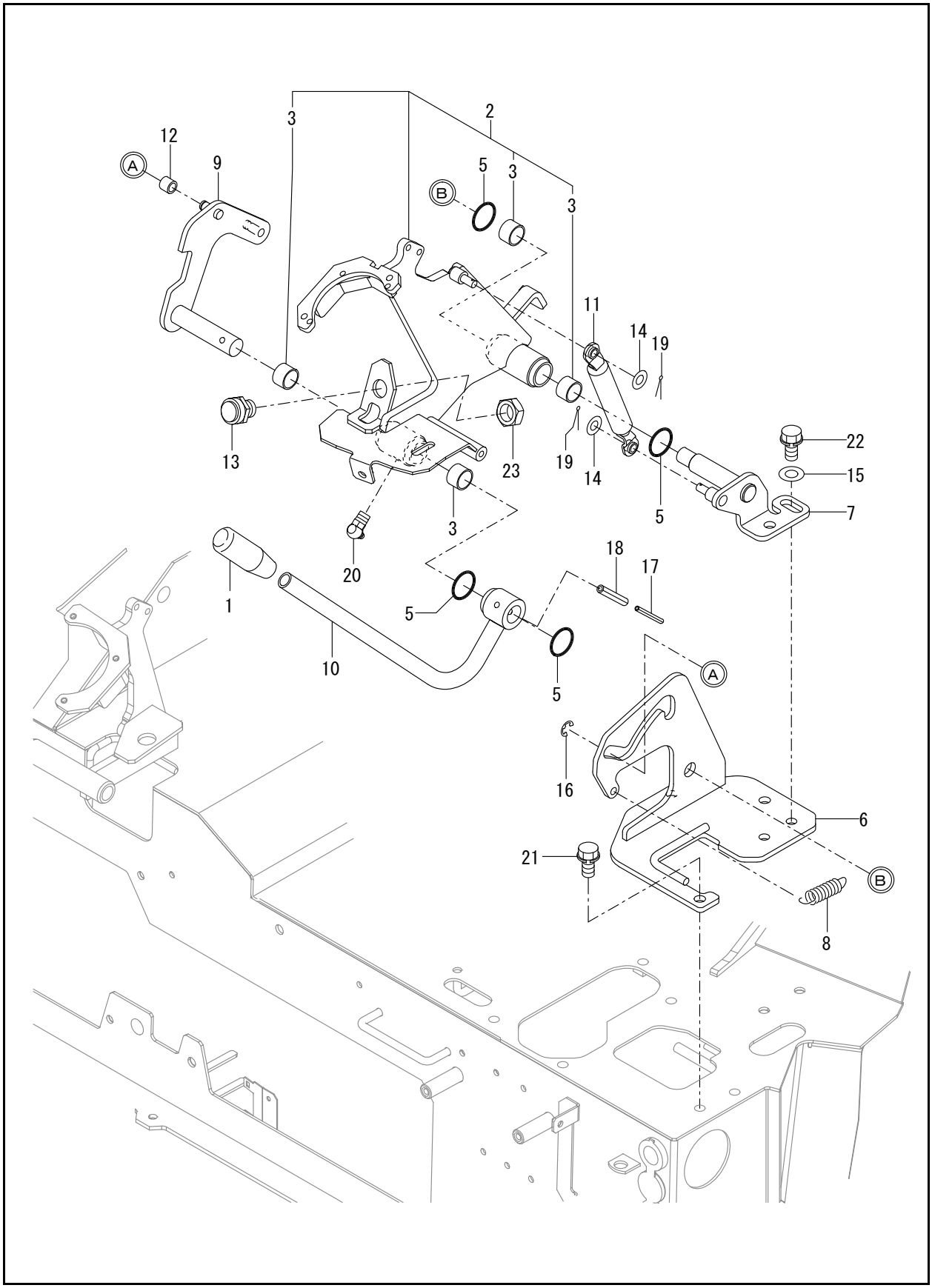

FIG. 39 - CONTROL EQUIPMENT (LOCK LEVER & STAND : LEFT)

Ref. No.	Part No.	Description	Qty.
1	50282079	GRIP,RED	1
2	50283946	LEVER STND ASSY,L	1
3	50280810	BUSHING 2015	4
5	50280793	O-RING 27X5.7	4
6	50283518	BASE ASSY,LEVER L	1
7	50283519	PLATE ASSY, BASE	1
8	50281653	SPRING 2.3X15X60	1
9	50283520	ROD ASSY, SPRING	1
10	50283522	LOCK LEVER ASSY,L	1
11	50281071	SPRING,GAS	1
12	50280894	BUSHING	1
13	50282353	SWITCH, SAFETY START	1
14	50282380	WASHER 8, POLISHED	2
15	138111	WASHER/POLISHED	2
16	176152	CIRCLIP E-7	1
17	50282413	SPRING PIN 3.5X40	1
18	50282414	SPRING PIN 6X40	1
19	50282418	COTTER PIN 2.0X20	2
20	50282499	NIPPLE C,GREASE	1
21	50282515	BOLT W/WASHER M10X20	3
22	50282516	BOLT W/WASHER M10X25	2
23	186626	NUT M18 LOCK	1

FIG. 40 - CONTROL EQUIPMENT (LOCK LEVER & STAND : RIGHT)

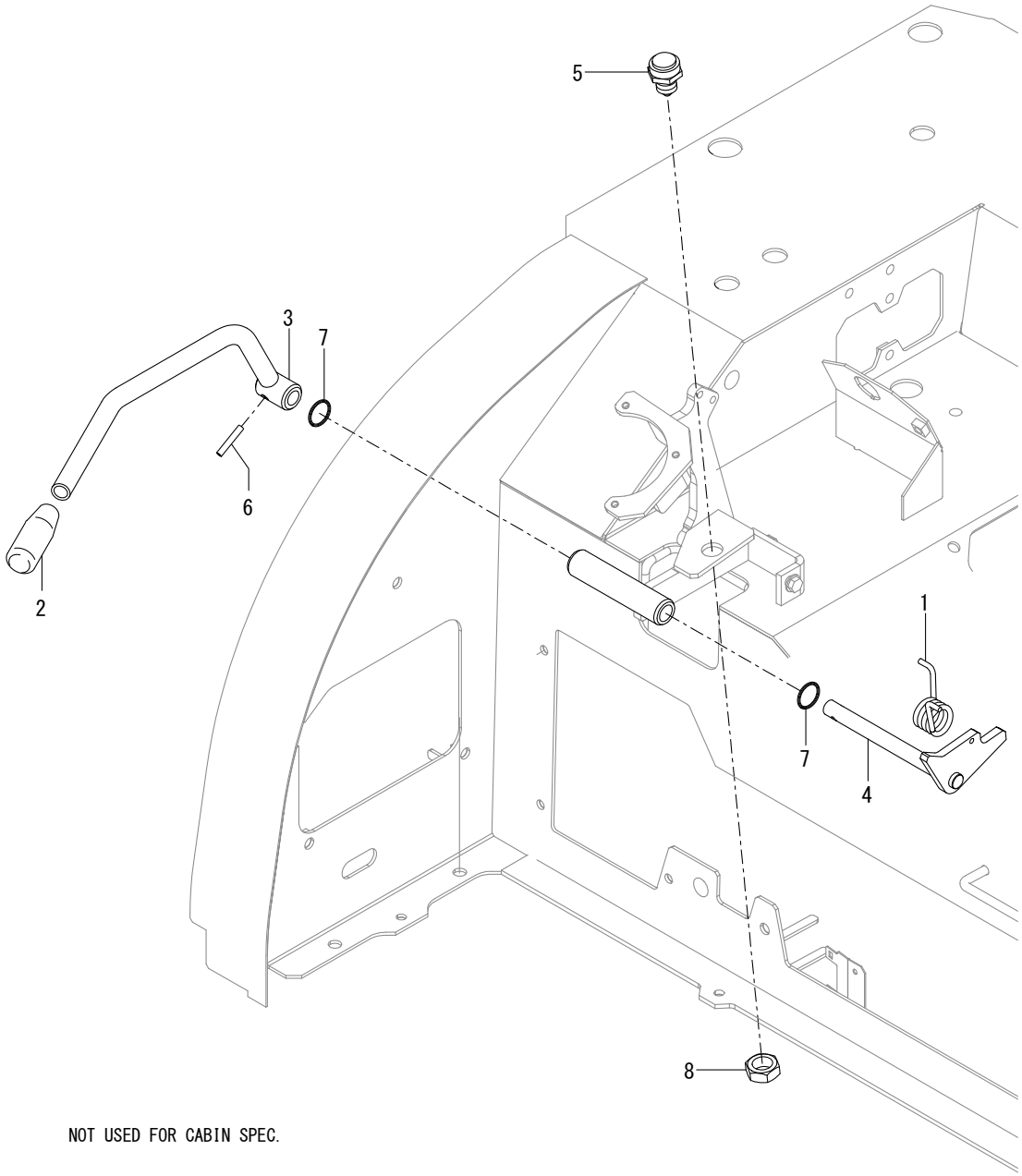

FIG. 40 - CONTROL EQUIPMENT (LOCK LEVER & STAND : RIGHT)

Ref. No.	Part No.	Description	Qty.
1	50282800	SPRING	1
2	50282079	GRIP,RED	1
3	50283524	LOCK LEVER ASSY,R	1
4	50283526	SHAFT ASSY,R LEVER	1
5	50282353	SWITCH, SAFETY START	1
6	50284057	SPRING PIN 5X32	1
7	50284076	O-RING 1A P-21.0	2
8	186626	NUT M18 LOCK	1

FIG. 41 - CONTROL EQUIPMENT (BLADE LEVER)

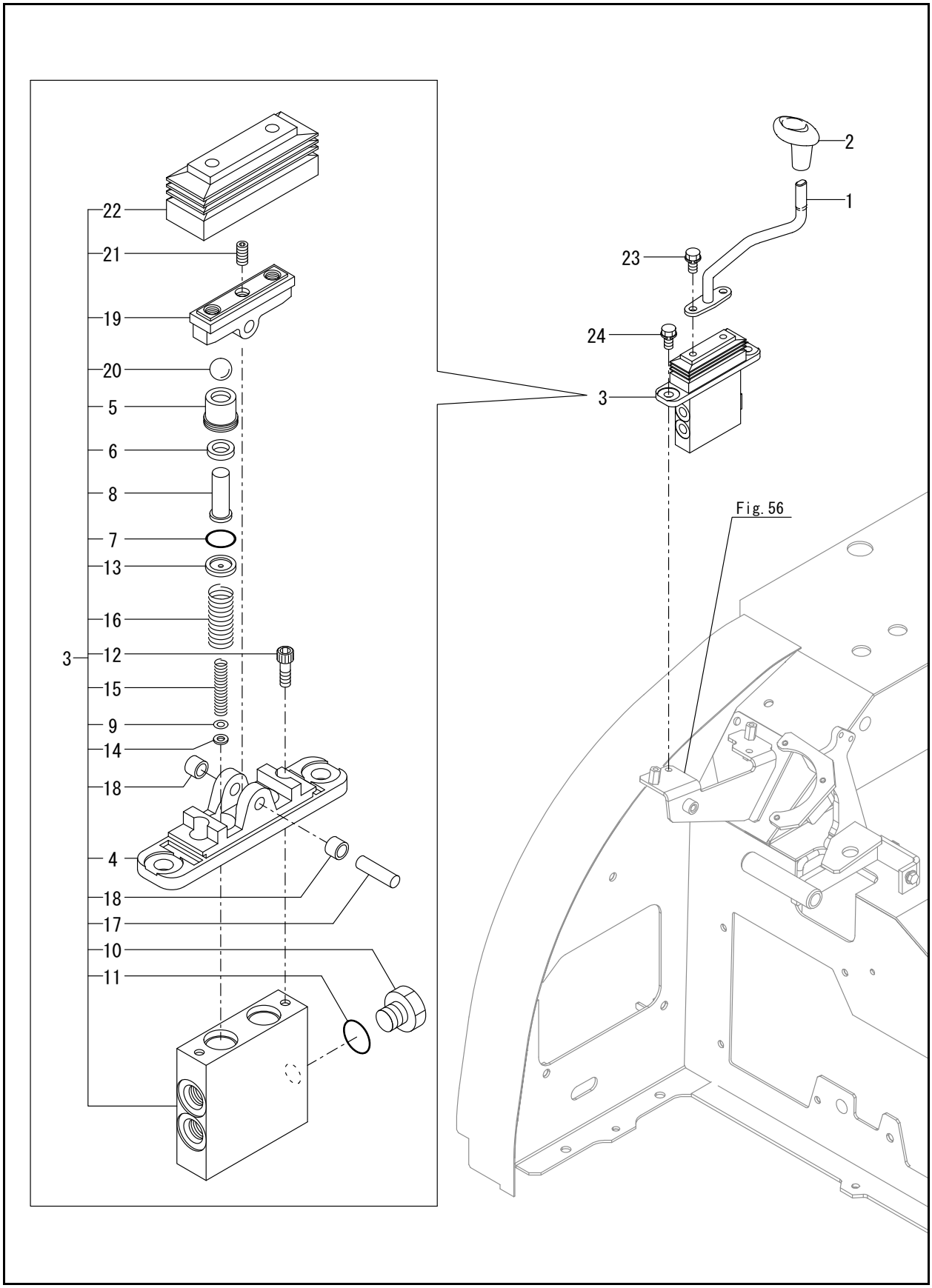

FIG. 41 - CONTROL EQUIPMENT (BLADE LEVER)

Ref. No.	Part No.	Description	Qty.
1	50283332	LEVER, BLADE	1
2	50282786	GRIP, BLADE	1
3	50283714	VALVE ASSY,BLADE	1
4	50281469	COVER	1
5	50281470	PLUG	2
6	50281471	PACKING	2
7	50281472	O-RING	2
8	50281473	ROD,PUSH	2
9	50281474	SHIM	2
10	50281475	PLUG	1
11	50281476	O-RING	1
12	50281477	SCREW,HEX.S.H.C	2
13	50281478	SEAT,SPRING	2
14	50281479	WASHER	2
15	50281480	SPRING	2
16	50283715	SPRING	2
17	50281481	CAM SHAFT	1
18	50281482	BUSHING	2
19	50281483	CAM	1
20	50281484	BALL,STEEL	2
21	50281485	SET SCREW	1
22	50281486	BELLOWS	1
23	50282506	BOLT W/WASHER M8X16	2
24	50282507	BOLT W/WASHER M8X20	2

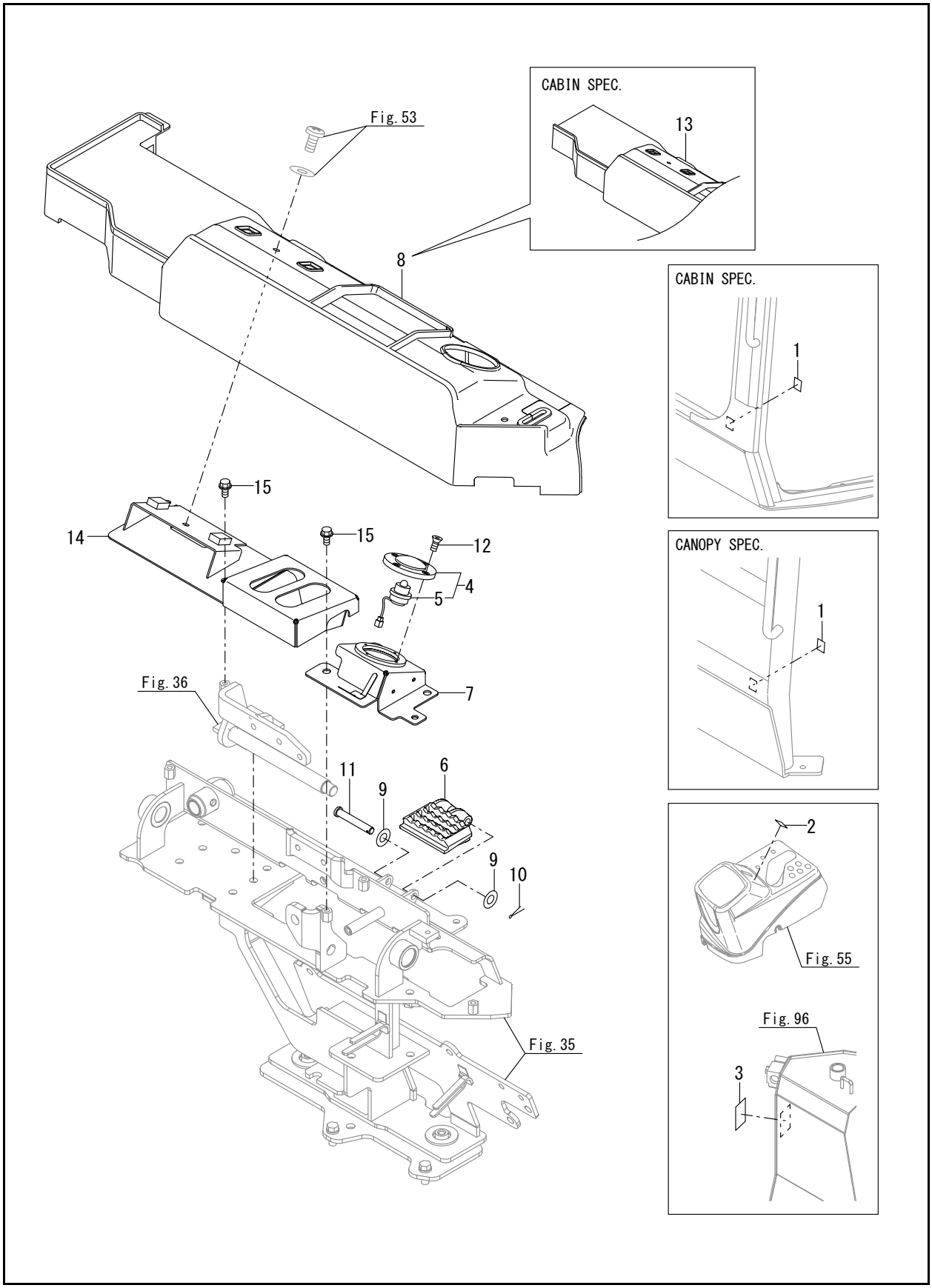
CABIN SPEC.
13
Fig. 53
8
CABIN SPEC.
1
15
14
15
12
4
5
CANOPY SPEC.
1
Fig. 36
7
11
9
6
9
10
2
Fig. 55
Fig. 96
3
Fig. 35

FIG. 42 - CONTROL EQUIPMENT (P.T.O.)

Ref. No.	Part No.	Description	Qty.
1	50283350	LABEL,PTO FOOT	1
2	50283351	LABEL,PTO SWITCH	1
3	50283352	LABEL,PTO SELECT	1
4	50283330	SWITCH ASSY, PTO	1
5	50283331	SAFETY SWITCH	1
6	50283504	PEDAL	1
7	50283569	STEP ASSY, PTO	1
8	50283575	FLOOR MAT (CANOPY)	1
9	138111	WASHER/POLISHED	2
10	50282418	COTTER PIN 2.0X20	1
11	50284058	PIN, H10X60	1
12	50284062	SCREW	4
13	50283335	FLOOR MAT,CAB	1
14	50283560	STEP ASSY,CONTROL	1
15	425-34733	BOLT M8 X 16 PLATED	5

FIG. 43 - ARM REST

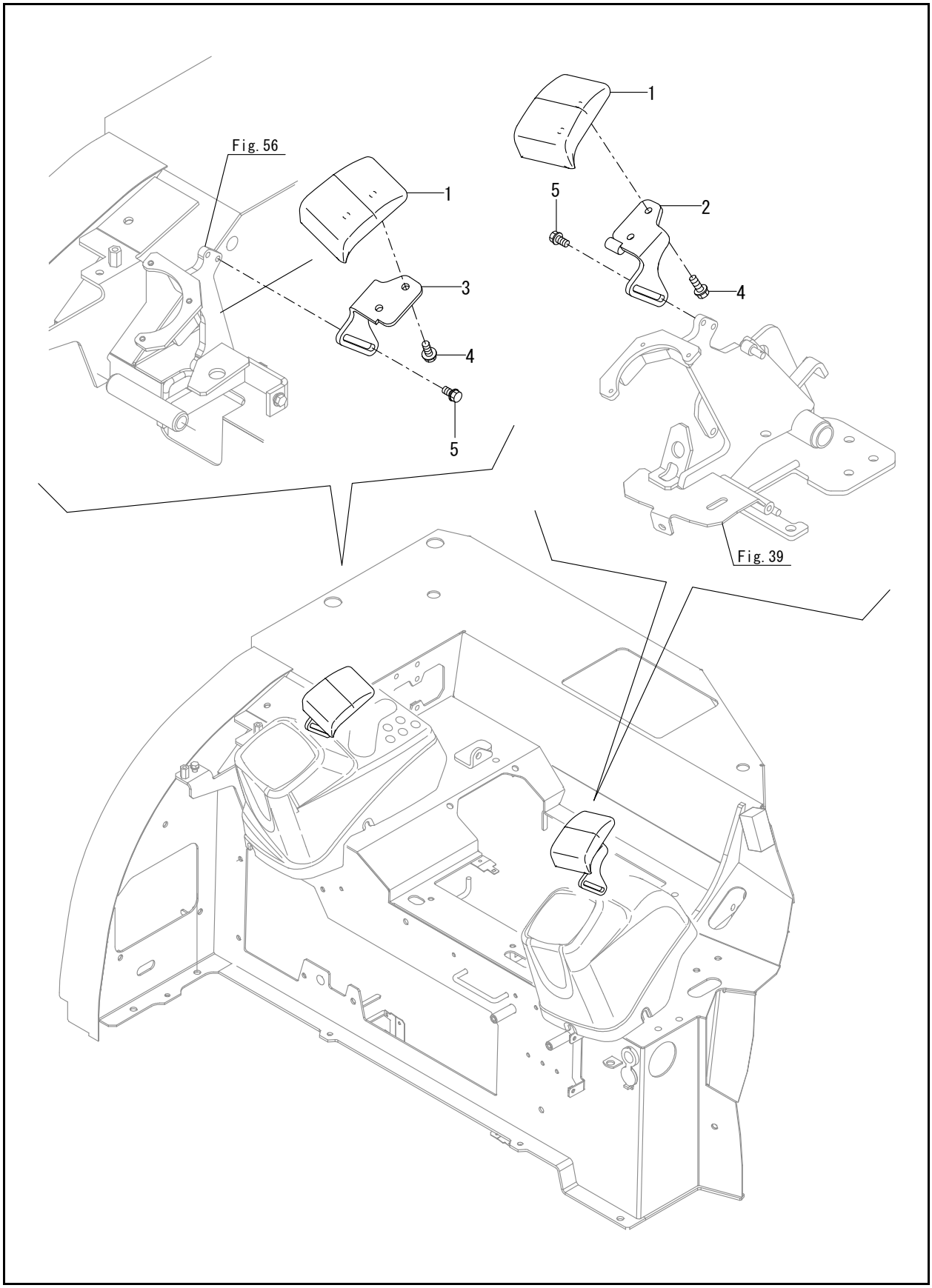

FIG. 43 - ARM REST

Ref. No.	Part No.	Description	Qty.
1	50281043	ARM REST	2
2	50283333	GUIDE ASSY	1
3	50283334	PLATE, GUIDE	1
4	50281318	BOLT 8X 16	4
5	50281318	BOLT 8X 16	4

FIG. 44 - TRAVEL FRAME

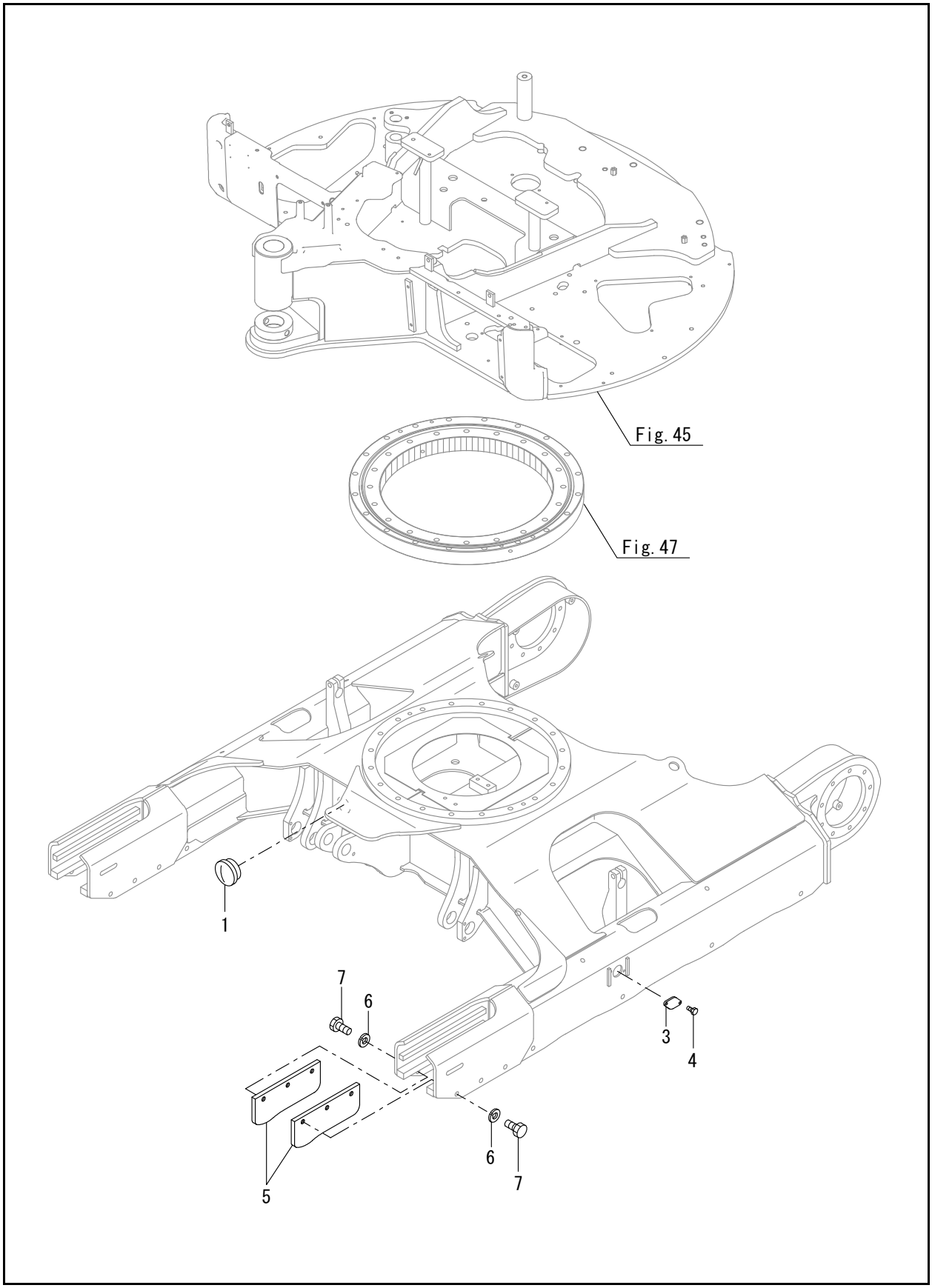

FIG. 44 - TRAVEL FRAME

Ref. No.	Part No.	Description	Qty.
1	50282727	GROMMET	1
3	50281136	FRAME COVER	2
4	50282558	BOLT M10X 12 PLATED	4
5	50282859	GUARD, CRAWLER	4
6	50282396	SPRING WASHER 16	12
7	50282569	BOLT M16X 35 PLATED	12

FIG. 45 - TURNING FRAME

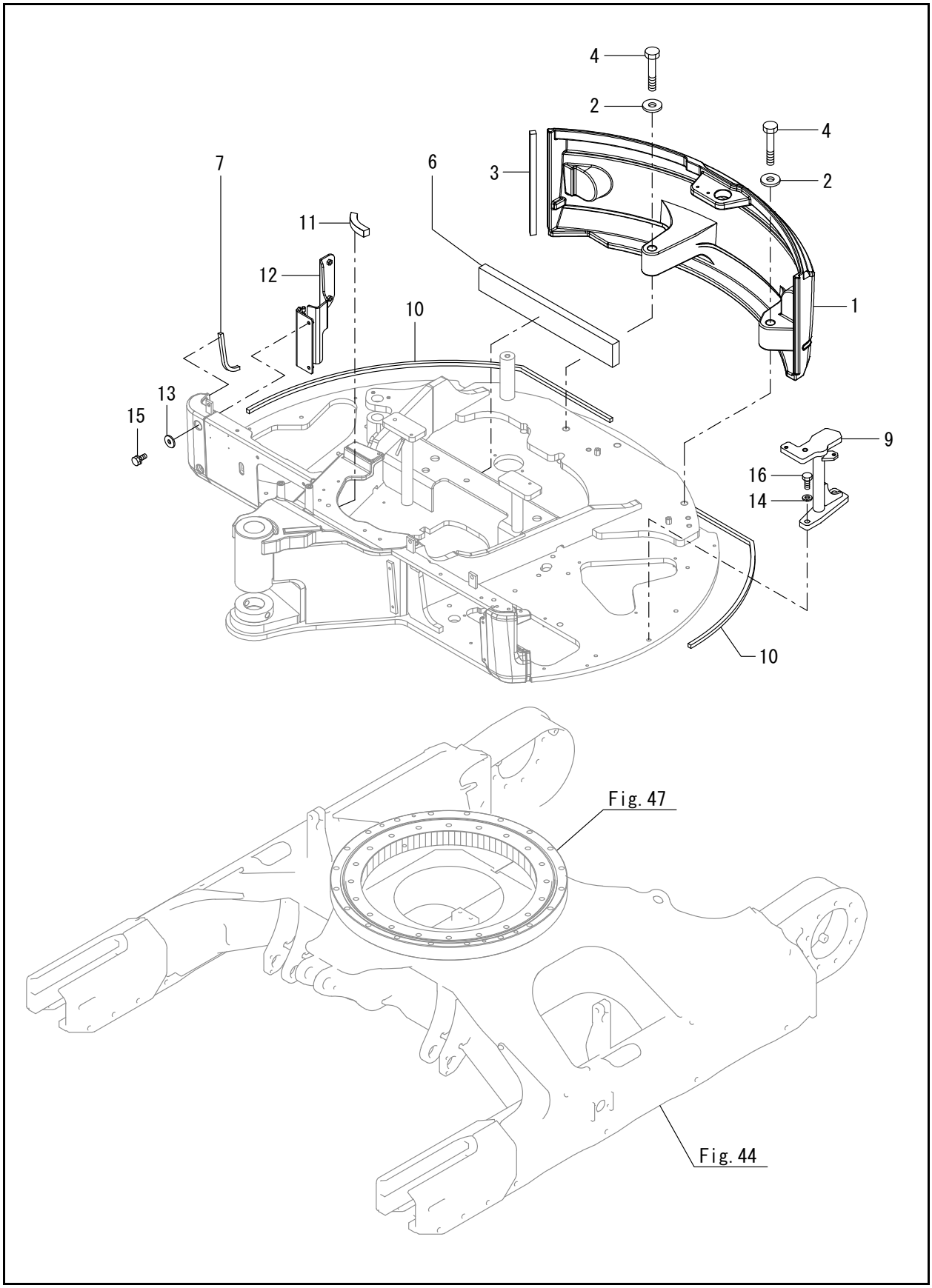

Ref. No.	Part No.	Description	Qty.
1	50283527	COUNTERWEIGHT	1
2	50280943	WASHER 24.5X65X8	2
3	50283528	SEAL,WEIGHT	1
4	50281072	BOLT 24X140	2
6	50283948	EV ,TF	1
7	50283949	SEAL,185	1
9	50283530	BOSS ASSY,L	1
10	50283531	SEAL, 1360	1
11	50283533	EV A,FRAME	1
12	50283620	HINGE ASSY,RF	1
13	138111	WASHER/POLISHED	2
14	50282396	SPRING WASHER 16	2
15	50282519	BOLT M10X 40	2
16	50282570	BOLT M16X 40 PLATED	2

FIG. 46 - GREASING

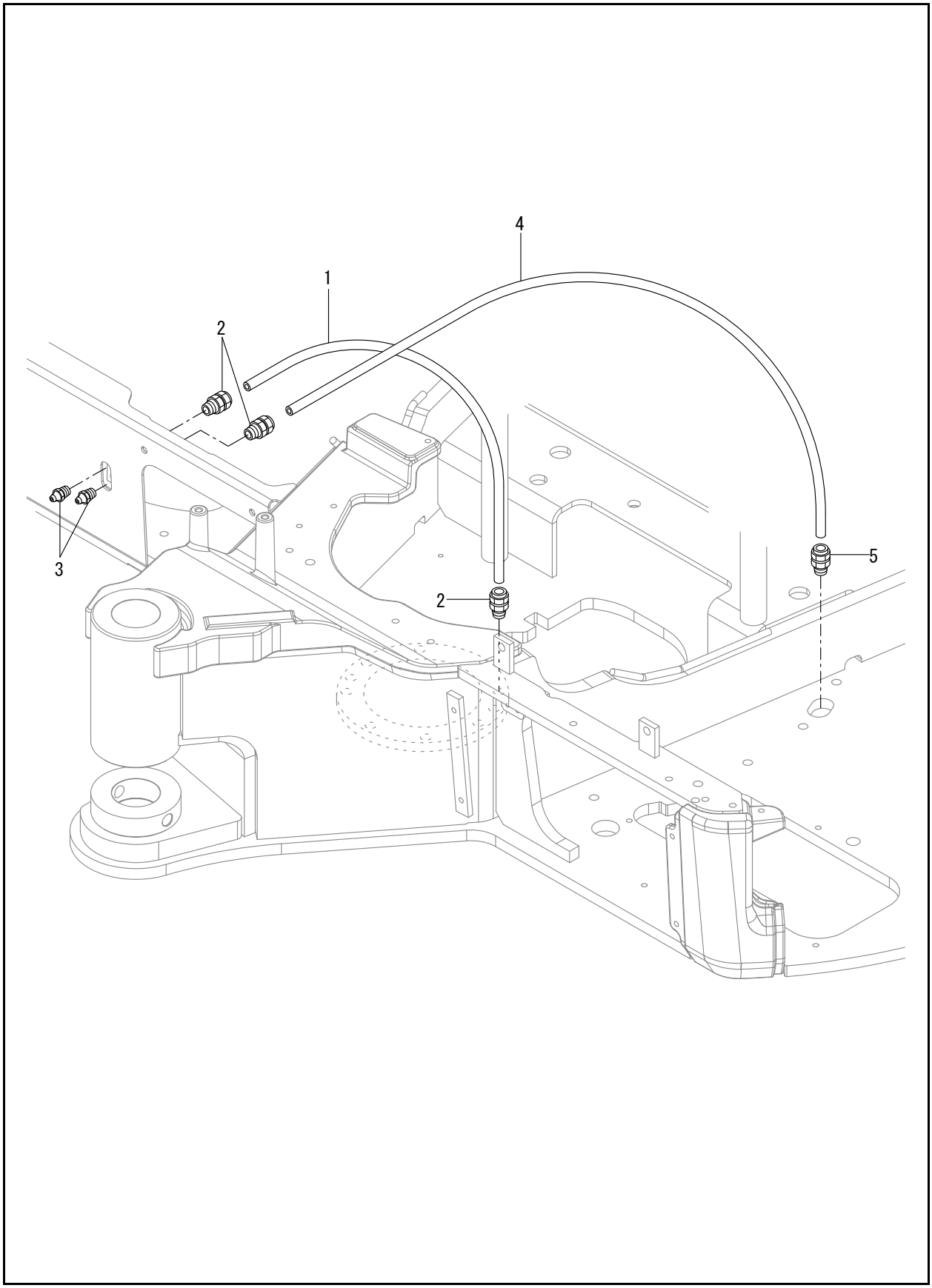

Ref. No.	Part No.	Description	Qty.
1	50283790	HOSE	1
2	50281493	JOINT,GREASE	3
3	50282497	NIPPLE PT1/8,GREASE	2
4	50283791	HOSE	1
5	50281493	JOINT,GREASE	1

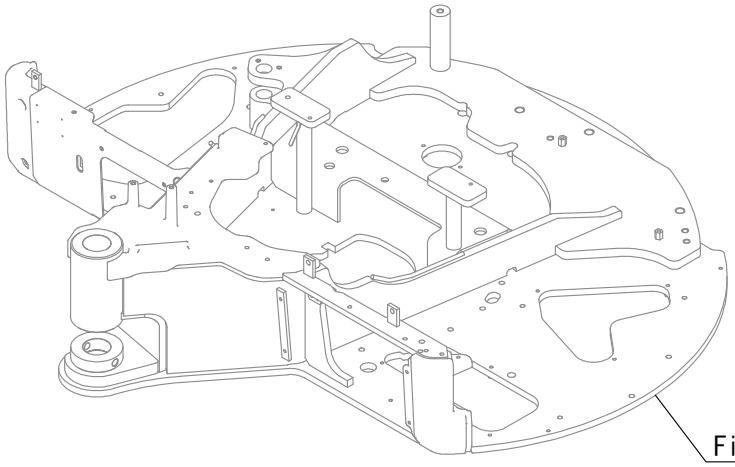

Fig. 45

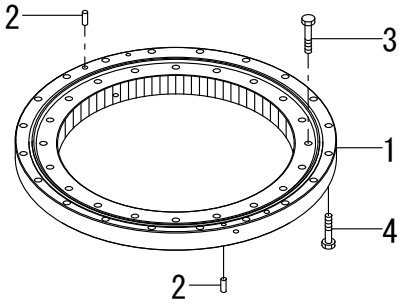

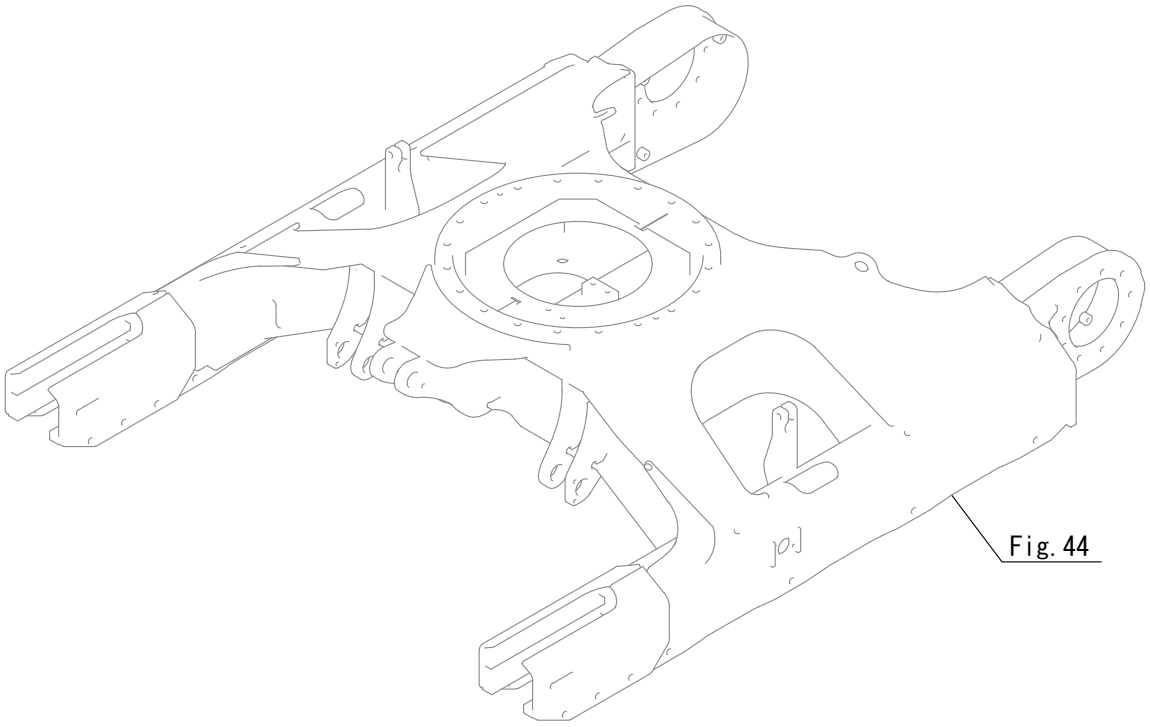

Fig. 44

FIG. 47 - TURNING BEARING

Ref. No.	Part No.	Description	Qty.
1	50282896	BEARING,TURNING	1
2	50282703	PARALLEL PIN 13X36	4
3	50282921	BOLT 16X90	20
4	50283984	BOLT 10.9 16X80	20

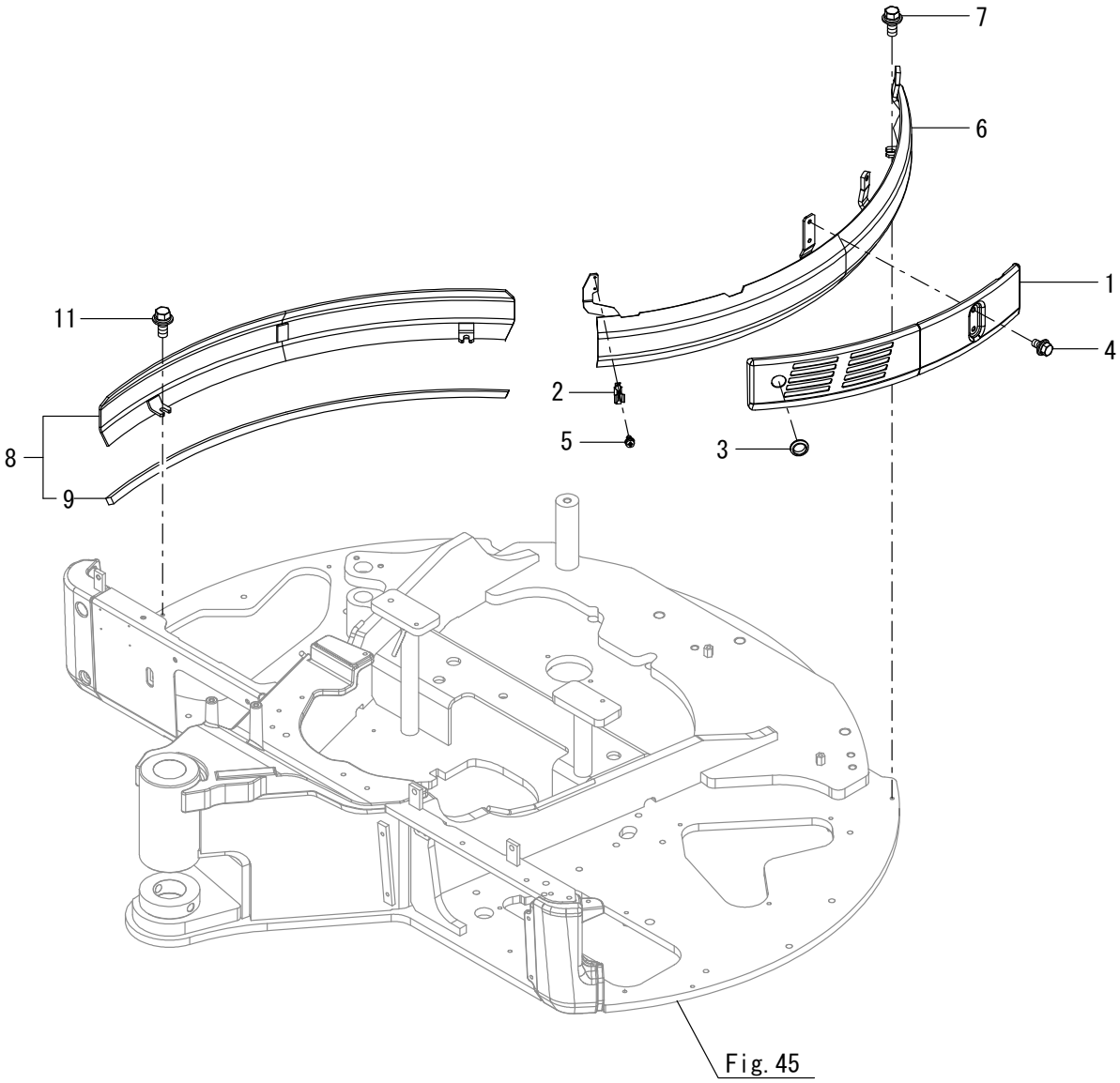
7
6
1
4
11
2
5
3
8
9
Fig. 45

FIG. 48 - FRAME GUARD

Ref. No.	Part No.	Description	Qty.
1	50286287	COVER ASSY	1
2	50282360	HOLDER	1
3	50280805	GROMMET	1
4	50282533	BOLT M 8X 16	2
5	50282543	SCREW M 5X 10	2
6	50283535	GUARD, FRAME (use with label 12A)	1
7	50282539	BOLT 10X25 W/PLW+SPW	2
8	50283534	GUARD, FRAME (use with label 12B)	1
9	50282968	SEAL 960	1
11	50282539	BOLT 10X25 W/PLW+SPW	2
12A	50281023	LABEL, GREASE CYL. (see Page 4, Page 6)	1
12B	50281023	LABEL, GREASE CYL. (see Page 4, Page 6)	1

FIG. 50 - COVER (TURNING FRAME)

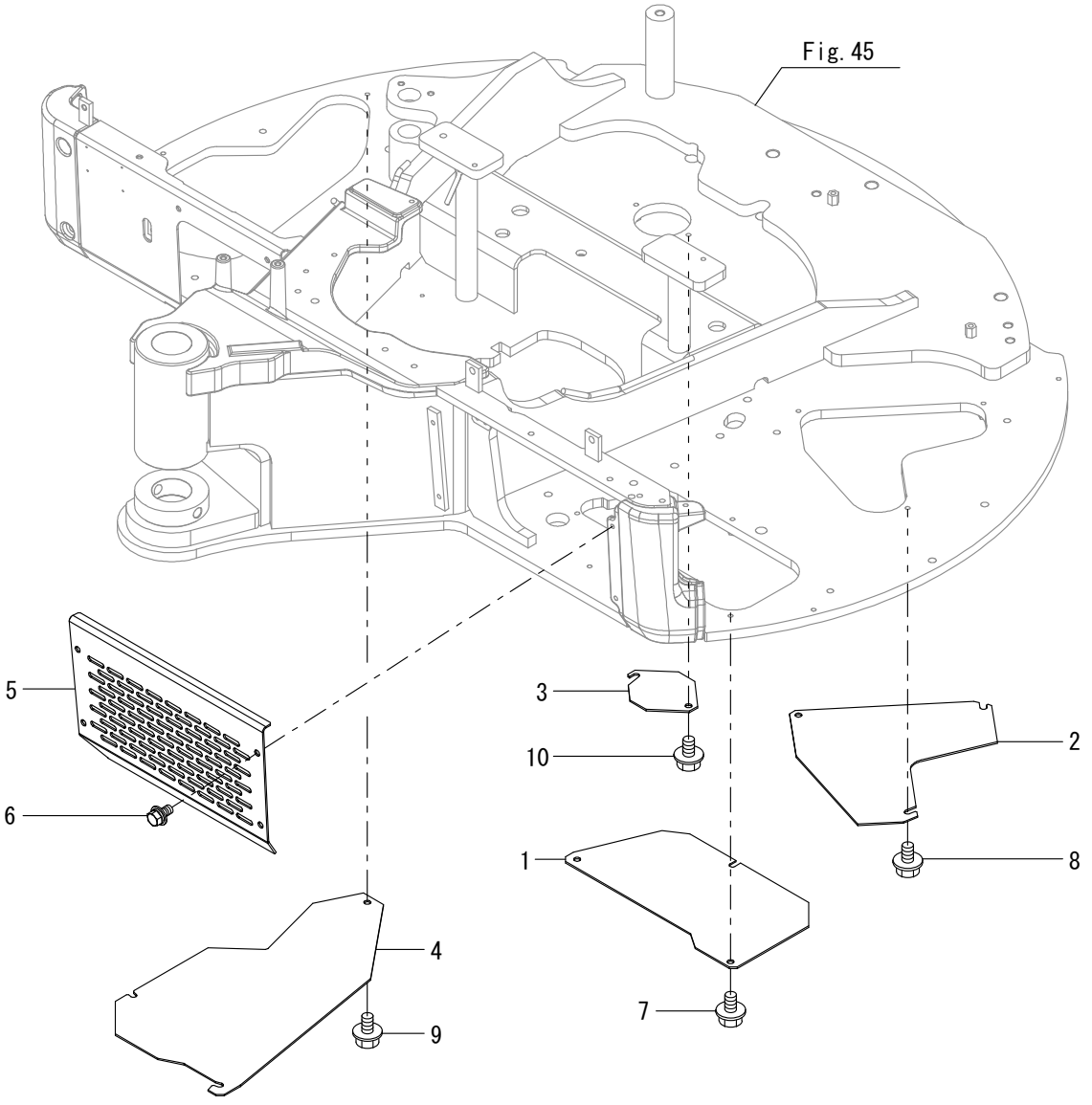

FIG. 50 - COVER (TURNING FRAME)

Ref. No.	Part No.	Description	Qty.
1	50283538	COVER,VALVE STAND A	1
2	50283539	COVER,VALVE STAND B	1
3	50283540	COVER, OIL SUMP	1
4	50283541	COVER, FUEL OIL	1
5	50283542	COVER,VALVE FRONT	1
6	50282533	BOLT M 8X 16	4
7	186619	BOLT M10X 16 PLATED	4
8	186619	BOLT M10X 16 PLATED	2
9	186619	BOLT M10X 16 PLATED	2
10	186619	BOLT M10X 16 PLATED	2

FIG. 51 - COVER (TRAVEL FRAME)

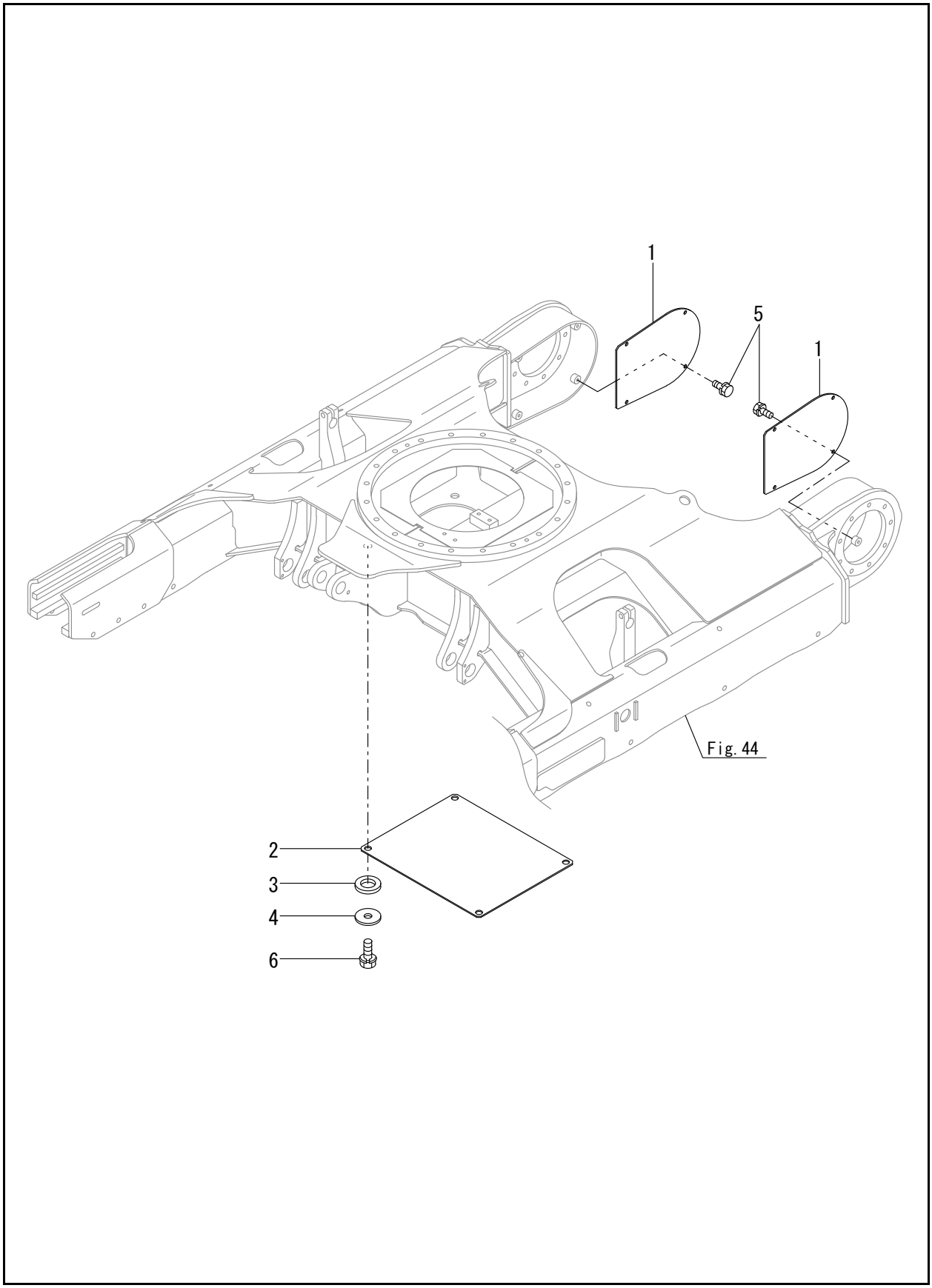

FIG. 51 - COVER (TRAVEL FRAME)

Ref. No.	Part No.	Description	Qty.
1	50283113	COVER, MOTOR	2
2	50283115	COVER	1
3	50280863	RUBBER	4
4	50282388	WASHER 12	4
5	50282515	BOLT W/WASHER M10X20	8
6	50282525	BOLT W/WASHER M12X30	4

Z45 - COMPACT EXCAVATOR

FIG. 52 - COVER (BONNET)

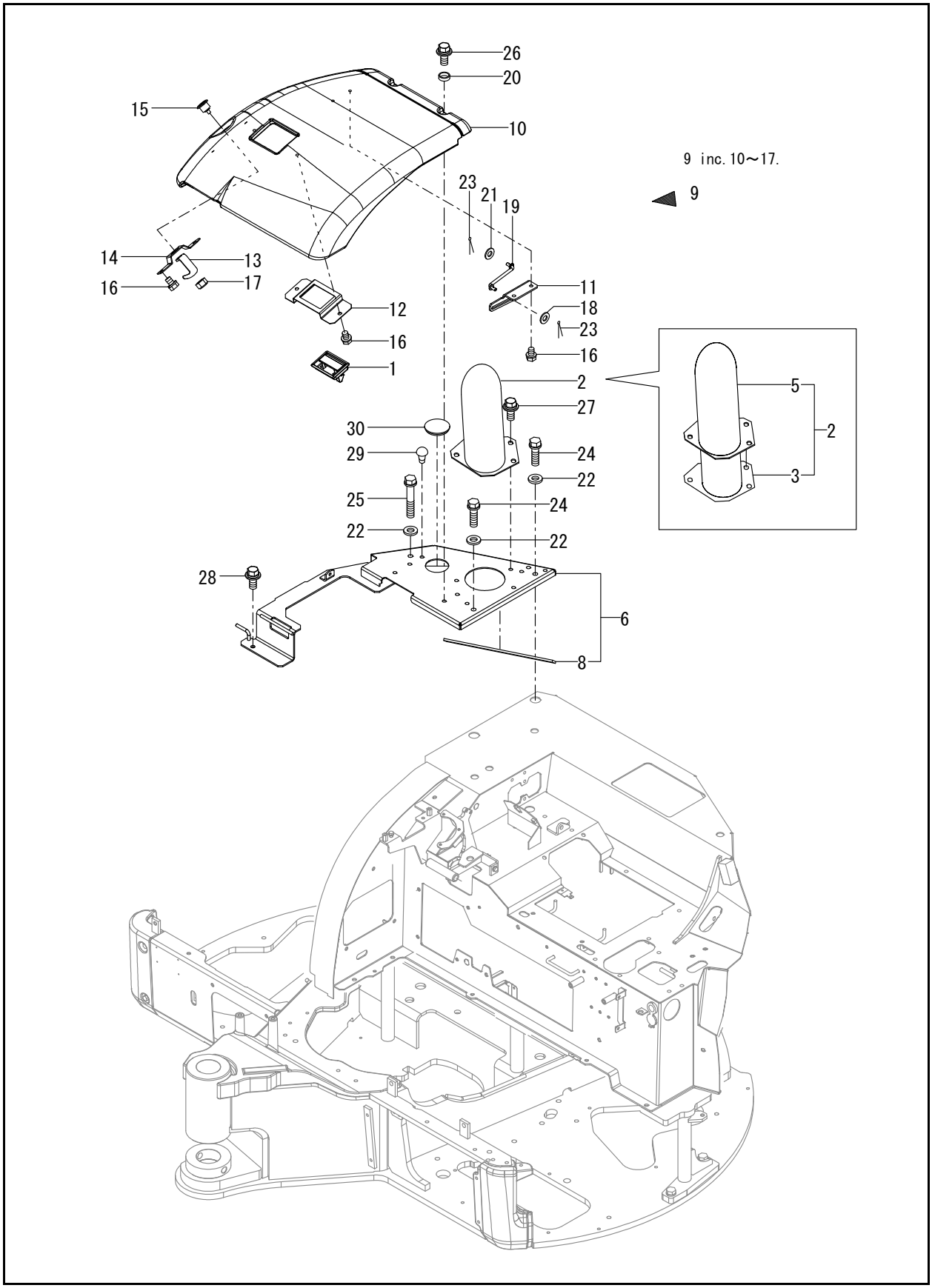

FIG. 52 - COVER (BONNET)

Ref. No.	Part No.	Description	Qty.
1	50280945	HANDLE, LOCK	1
2	50283116	COVER	1
3	50286516	EXHAUST COVER	1
5	50286517	EXHAUST COVER	1
6	50283551	MUFFLER COVER	1
8	50283552	SEAL A,COVER	1
9	50286602	COVER ASSY	1
10	50283537	COVER ASSY	1
11	50283553	GUIDE, STOPPER	1
12	50283554	STAY,CATCH	1
13	50283555	STAY,KYE	1
14	50283556	ROCK PLATE	1
15	50280889	KEY ASSY, CYLINDER	1
16	50282505	BOLT M 8X 12	6
17	50282576	U-NUT M10	1
18	50282361	WASHER	1
19	50281051	ROD,STOPPER	1
20	50283614	COLOR 13X16X5	2
21	50282380	WASHER 8, POLISHED	1
22	138111	WASHER/POLISHED	3
23	50282418	COTTER PIN 2.0X20	2
24	50282518	BOLT M10X 35	2
25	50284098	BOLT M10 X 60	1
26	50282539	BOLT 10X25 W/PLW+SPW	2
27	50282539	BOLT 10X25 W/PLW+SPW	3
28	50282539	BOLT 10X25 W/PLW+SPW	1
29	50280782	CLIP	4
30	50283272	CAP	1

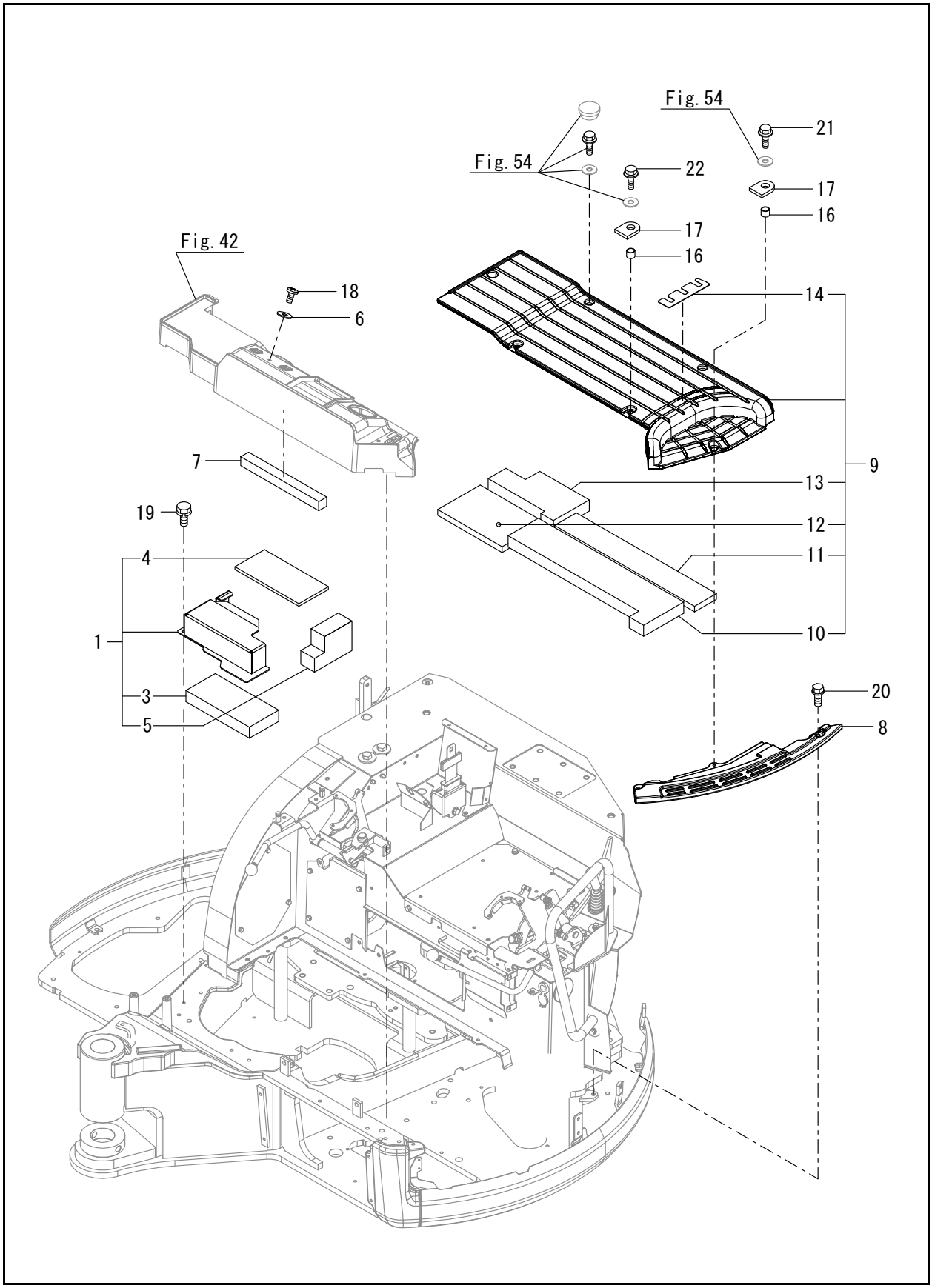
Fig. 54
21
Fig. 54
22
17
16
17
16
Fig. 42
18
14
6
7
9
13
19
12
4
11
1
10
20
3
8
5

Ref. No.	Part No.	Description	Qty.
1	50283557	STEP ASSY	1
3	50283562	EV B STEP	1
4	50283563	EV C STEP	1
5	50283568	EV D,COVER	1
6	50282970	WASHER M8	2
7	50283576	EV A,FLOOR MAT	1
8	50283577	PLATE, NON SLIP STEP	1
9	50283579	STEP A ASSY	1
10	50283561	EV A,STEP	1
11	50283572	EV D1,STEP	1
12	50283573	EV E,STEP	1
13	50283574	EV D2,STEP	1
14	50283578	NON SLIP SEAT	1
16	50283580	COLLAR 10X12X10	3
17	50283581	PAD ABSOBER,STEP	3
18	50282721	SCREW	2
19	50282515	BOLT W/WASHER M10X20	2
20	50282516	BOLT W/WASHER M10X25	2
21	425-34746	BOLT M8 X 20 PLATED	1
22	425-34765	BOLT M8 X 25 PLATED	2

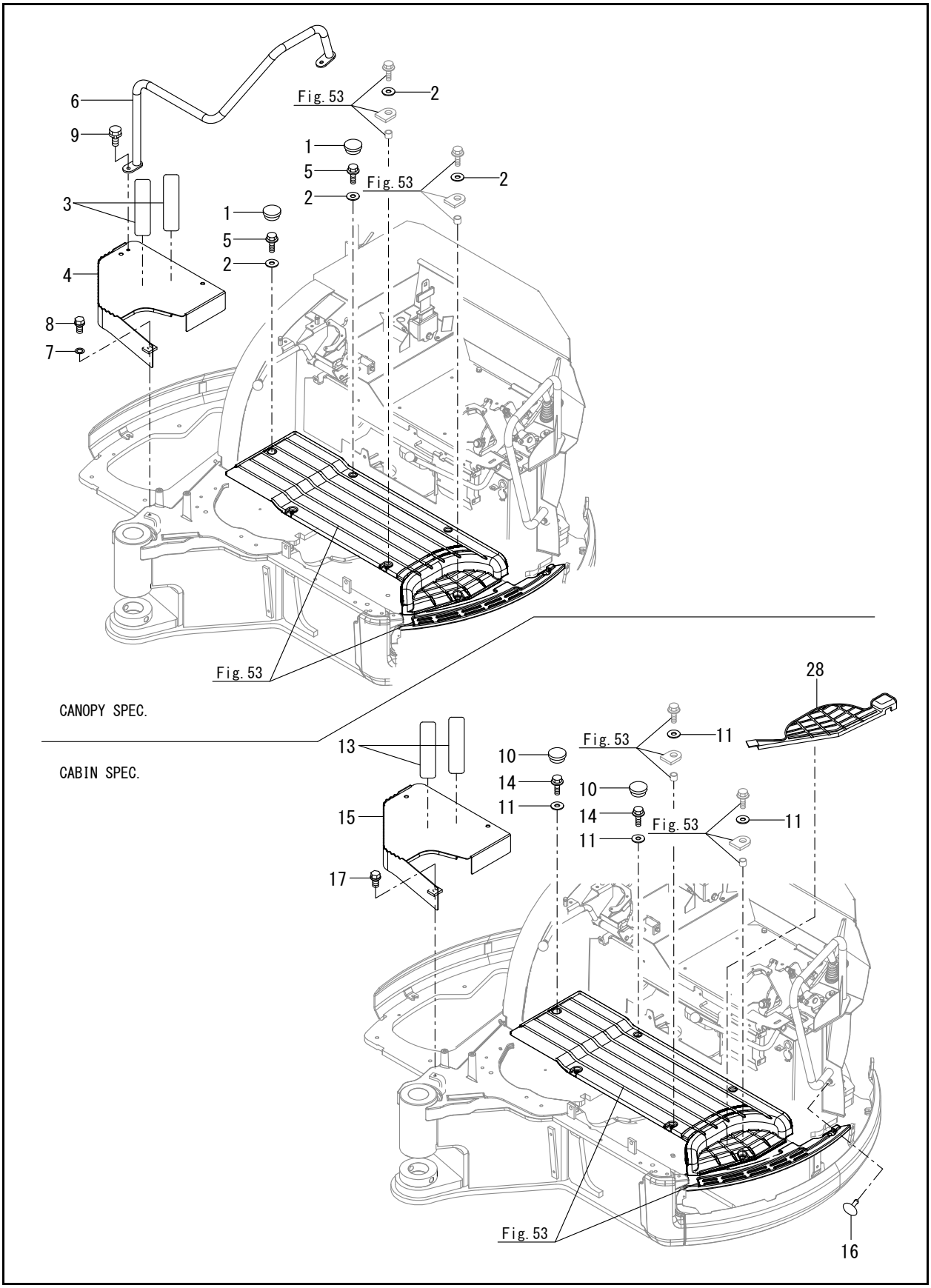
6
9
3
4
8
7
Fig. 53
2
1
5
2
Fig. 53
2
1
5
2
Fig. 53
CANOPY SPEC.
CABIN SPEC.
13
15
17
10
14
11
Fig. 53
11
28
10
14
11
Fig. 53
11
Fig. 53
16

Ref. No.	Part No.	Description	Qty.
1	50283558	CAP,CLIP	3
2	50282361	WASHER	6
3	50282788	SHEET,NON SLIP50X200	2
4	50283583	STEP R ASSY,P (GRAY: 49)	1
5	50283584	BOLT 8X20	3
6	50283597	HANDRAIL R ASSY (73)	1
7	138111	WASHER/POLISHED	3
8	50282515	BOLT W/WASHER M10X20	3
9	50282515	BOLT W/WASHER M10X20	2
10	50283558	CAP,CLIP	3
11	50282361	WASHER	5
12	50283570	MAT, FLOOR	1
13	50282788	SHEET,NON SLIP50X200	2
14	50283584	BOLT 8X20	2
15	50283586	STEP R ASSY,C	1
16	50282889	CLIP	1
17	50282515	BOLT W/WASHER M10X20	3

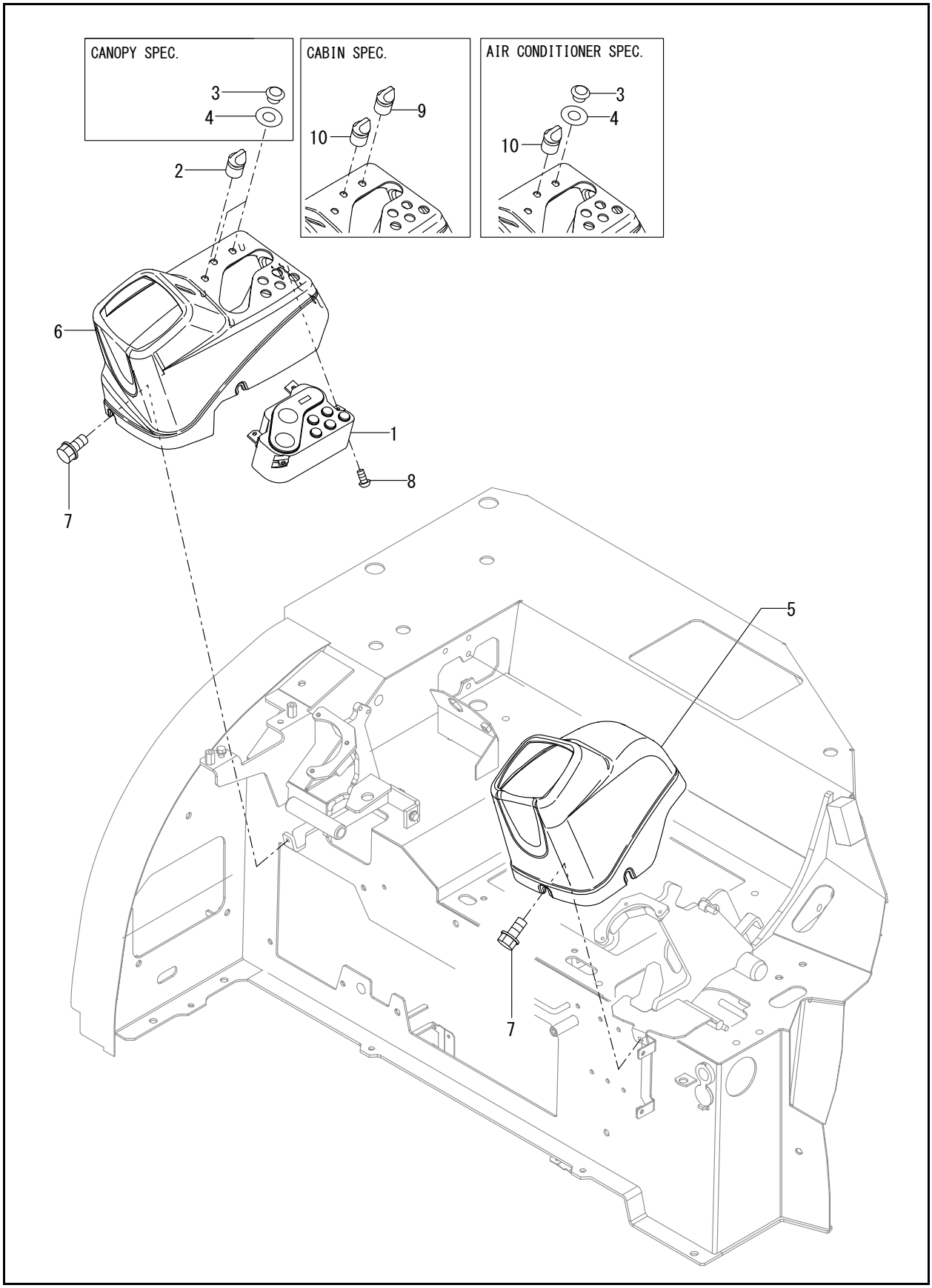
CANOPY SPEC.
3
4
2
CABIN SPEC.
9
10
AIR CONDITIONER SPEC.
3
4
10
6
1
8
7
5
7

FIG. 55 - INSTRUMENT PANEL

Ref. No.	Part No.	Description	Qty.
1	50282078	MONITOR ASSY	1
2	50282843	SWITCH ASSY, LIGHT	1
3	50282845	CAP	2
4	50282846	GASKET	2
5	50283587	IN-PANE,L	1
6	50283588	IN-PANE,R	1
7	50281318	BOLT 8X 16	6
8	50282422	SCREW 5X12	4
9	50282844	SWITCH, HEATER	1
10	50283231	SWITCH ASSY,WASHER	1

SEAT

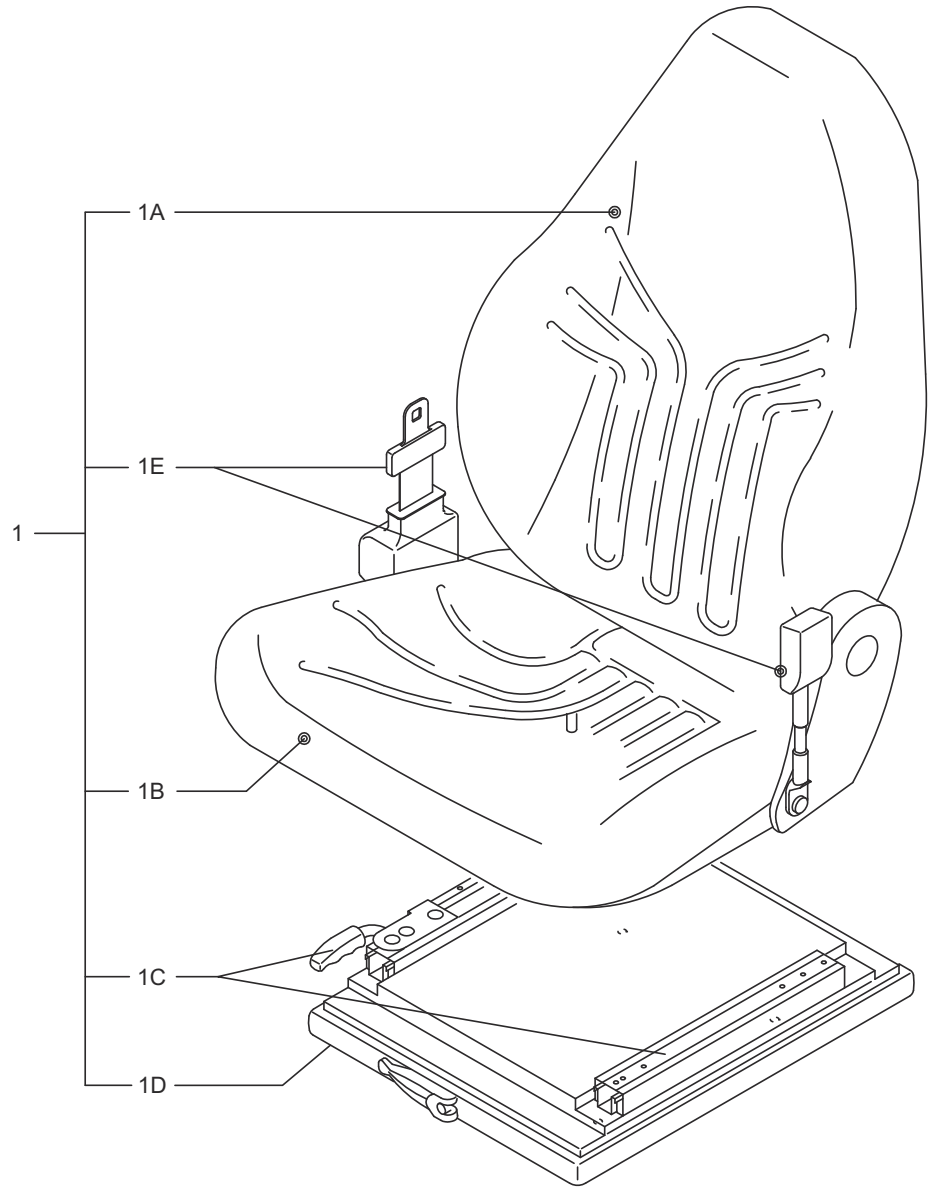

Ref. No.	Part No.	Description	Qty.
1	50286421	COMPLETE SEAT	1
1A	50286427	SEAT BACK KIT	1
1B	50286426	SEAT CUSHION KIT	1
1C	50286425	ADJUSTMENT RAILS KIT	1
1D	50286428	SEAT SUSPENSION	1
	50286424	SEAT SUSPENSION REBUILD KIT (not shown)	1
	50286423	SHOCK ABSORBER KIT (not shown)	1
1E	50286422	RETRACTABLE SEAT BELT KIT/2	"1
	203047	KIT/3 INCH SEAT BELT	1

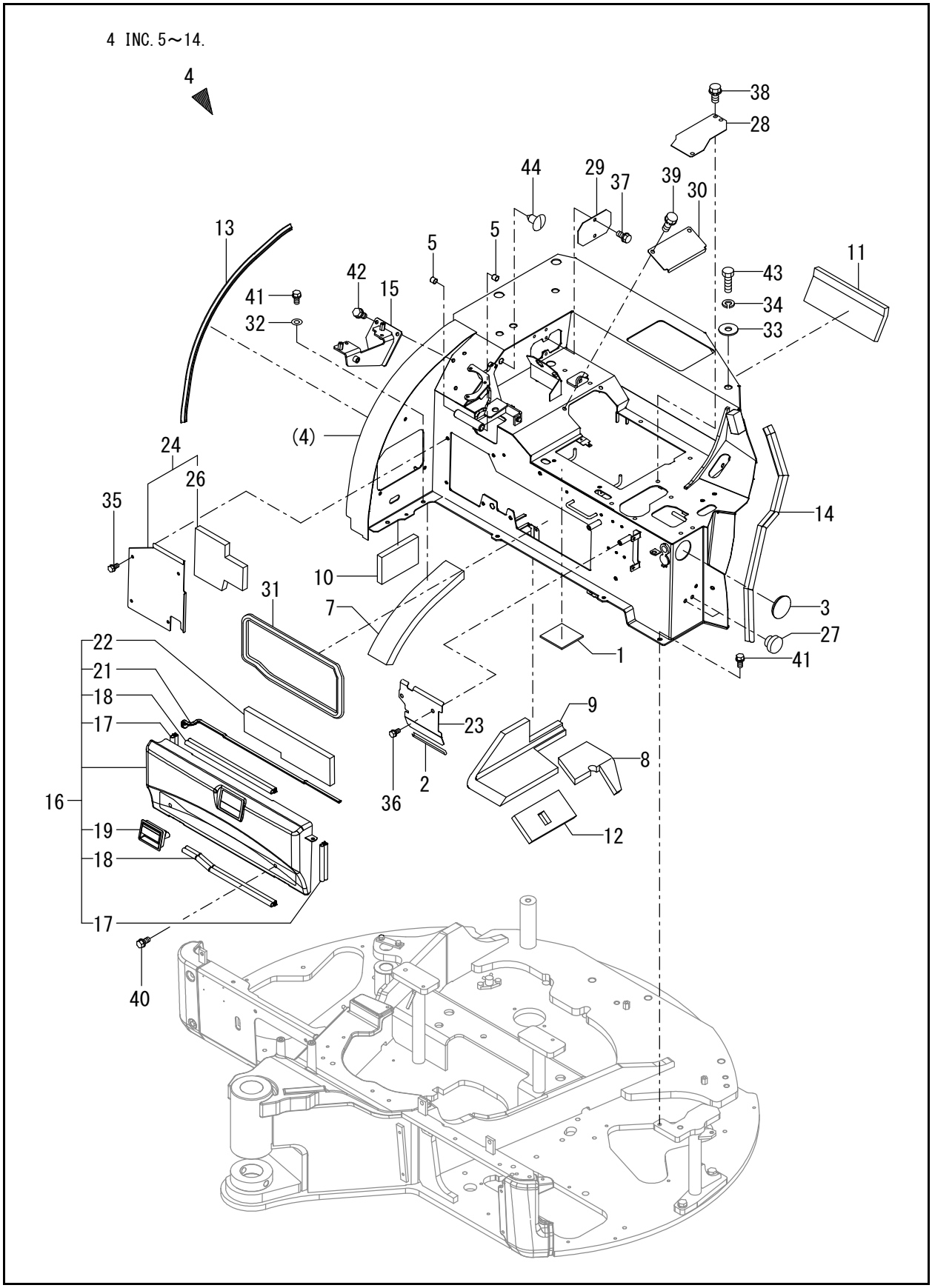
4 INC.5～14.
4
38
28
44
29
37
39
30
13
5
5
11
42
15
43
41
34
32
33
(4)
24
26
35
14
10
31
7
3
27
1
41
22
21
18
17
23
9
8
16
36
2
12
19
18
17
40

FIG. 56 - SEAT MOUNT

Ref. No.	Part No.	Description	Qty.
1	50281056	RUBBER PLATE	2
2	50281049	SEAL 125	1
3	50283272	CAP	1
4	50286603	SEAT MOUNT ASSY (use with label s 45A, 45B, 45C)	1
5	50282726	BUSHING 1415	2
7	50283600	EV A,SEAT MOUNT	1
8	50283601	EV B,SEAT MOUNT	1
9	50283602	EV C,SEAT MOUNT	1
10	50283961	EV E,SEAT MOUNT	1
11	50283964	EV J,SEAT MOUNT	1
12	50283607	EV H,SEAT MOUNT	1
13	50282888	SEAL B	1
14	50283967	RUBBER, SEAL B	1
15	50283957	BRACKET ASSY,BLADE	1
16	50283958	COVER ASSY,MANUAL (use with label 45D)	1
17	50282905	SEAL, G RADIATOR	2
18	50282920	SEAL A, UNIT	2
19	50280945	HANDLE, LOCK	1
21	50283592	SEAL	1
22	50283962	EV F,SEAT MOUNT	1
23	50283593	COVER, ELECTRIC	1
24	50283959	COVER A,SEAT M ASSY	1
26	50283963	EV G,SEAT MOUNT	1
27	50280948	PLUG	2
28	50283341	COVER,SEAT MOUNT UP	1
29	50283342	COVER	1
30	50283343	COVER, SEAT MOUNT	1
31	50282774	SEAL,COVER A	1
32	138111	WASHER/POLISHED	2
33	50282389	WASHER, 14	3
34	50282396	SPRING WASHER 16	4
35	50282506	BOLT W/WASHER M8X16	4
36	50282506	BOLT W/WASHER M8X16	2
37	50282506	BOLT W/WASHER M8X16	2
38	50282514	BOLT M10X 16	2
39	50282514	BOLT M10X 16	2
40	50282515	BOLT W/WASHER M10X20	2
41	50282515	BOLT W/WASHER M10X20	4
42	50282515	BOLT W/WASHER M10X20	3
43	50284127	BOLT M16 X 25 PLATED	4
44	50282987	CLIP 11	2
45A	50281174	LABEL, PIN US (see Page 4, Page 6)	1
45B	50281019	LABEL, MANUAL US (see Page 4, Page 6)	1
45C	50281033	LABEL, LEVER LOCK US (see Page 4, Page 6)	1
45D	50281172	LABEL, SUPPORT US (see Page 4, Page 6)	1

NOTE: CANOPY SPEC. ONLY

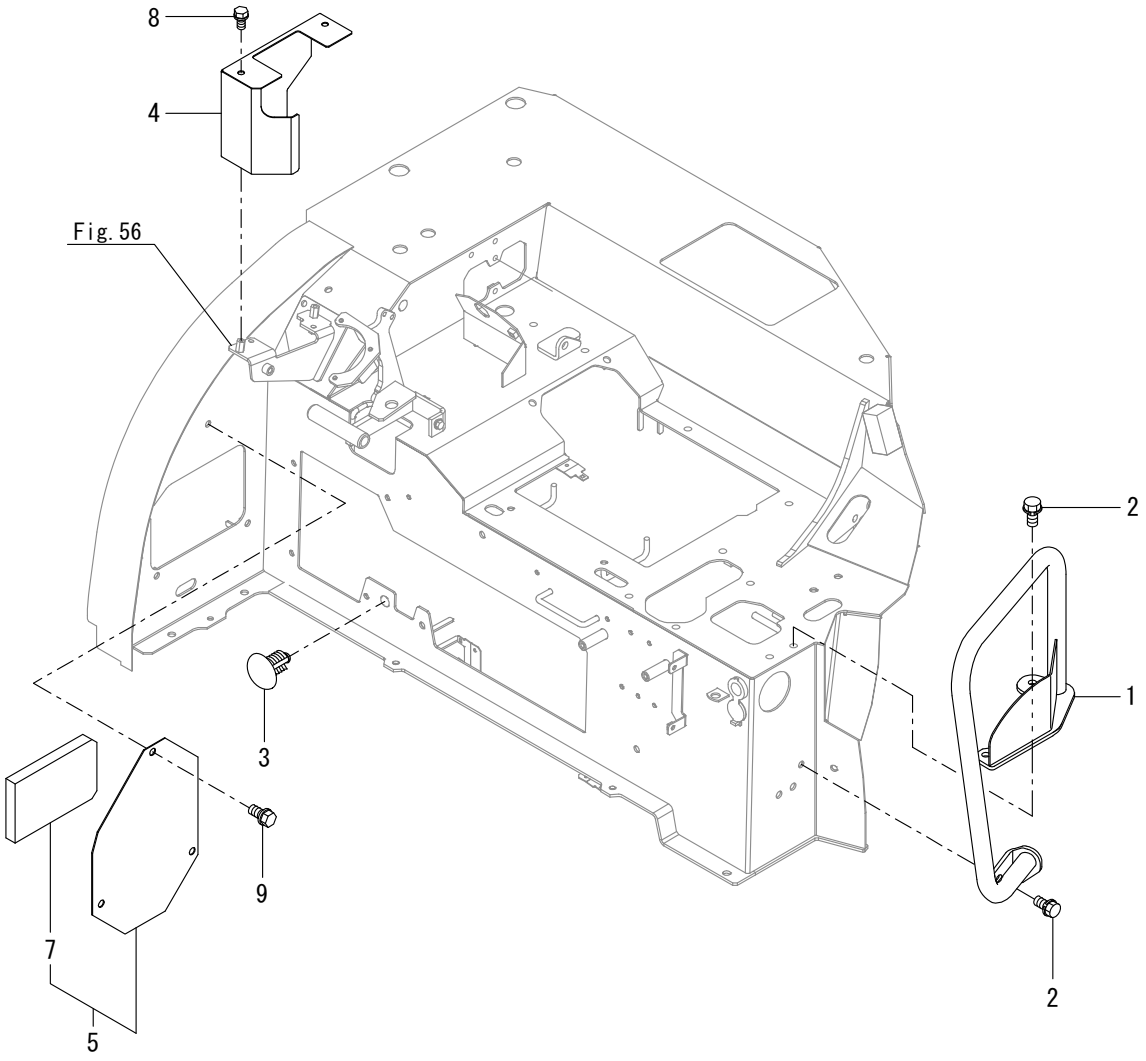

FIG. 57 - SEAT MOUNT COVER & HAND HOLD

Ref. No.	Part No.	Description	Qty.
1	50283595	HAND HOLD ASSY	1
2	50282515	BOLT W/WASHER M10X20	2
3	50280782	CLIP	1
4	50283543	COVER, BLADE	1
5	50283960	COVER B,SEAT M ASSY	1
7	50283961	EV E,SEAT MOUNT	1
8	50282506	BOLT W/WASHER M8X16	2
9	50282515	BOLT W/WASHER M10X20	3

FIG. 58 - SEAT PLATE

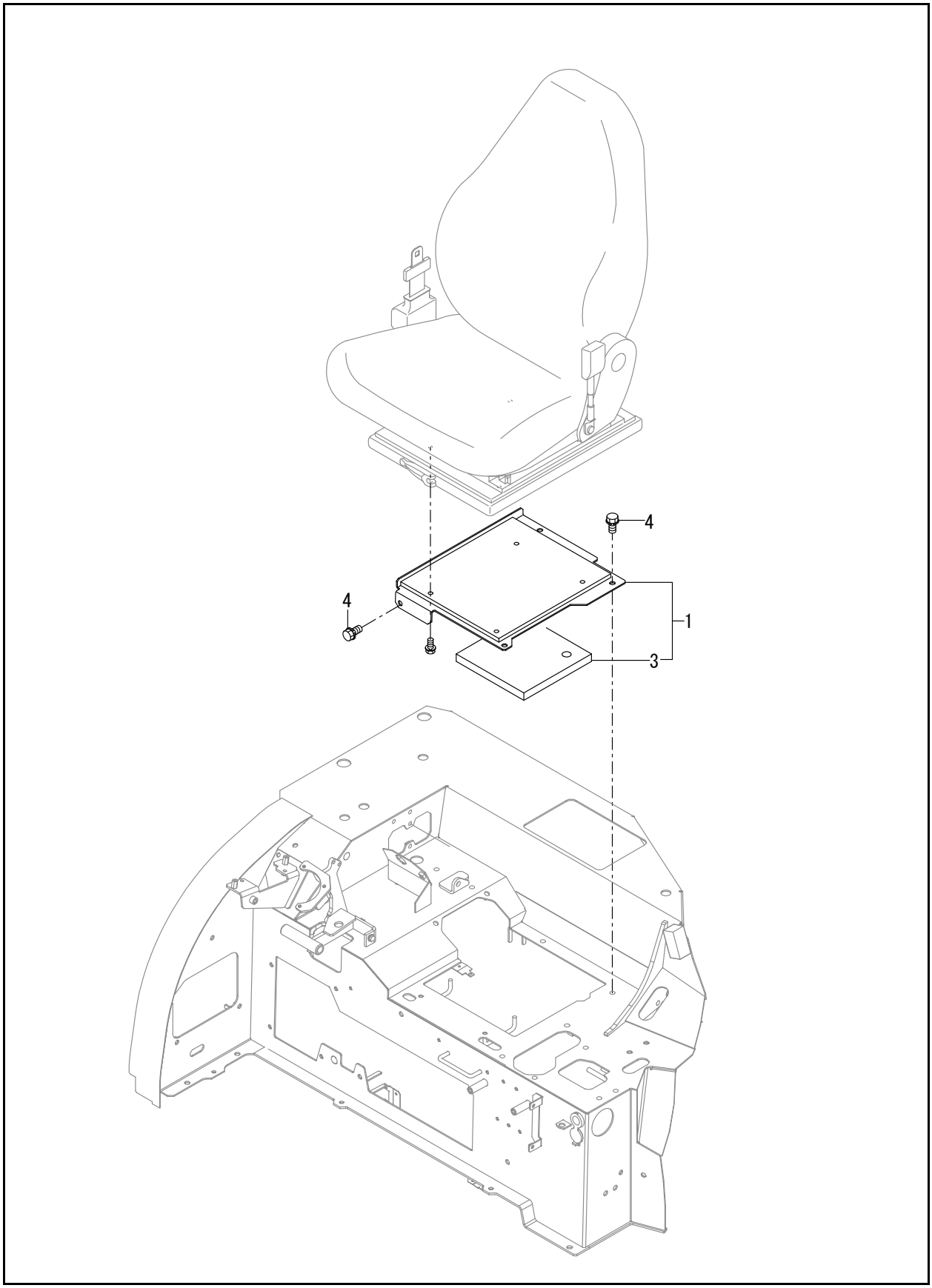

FIG. 58 - SEAT PLATE

Ref. No.	Part No.	Description	Qty.
1	50283337	PLATE ASSY,SEAT GRM	1
3	50283338	EV D,SEAT MOUNT	1
4	50282515	BOLT W/WASHER M10X20	4

FIG. 59 - BONNET (REAR)

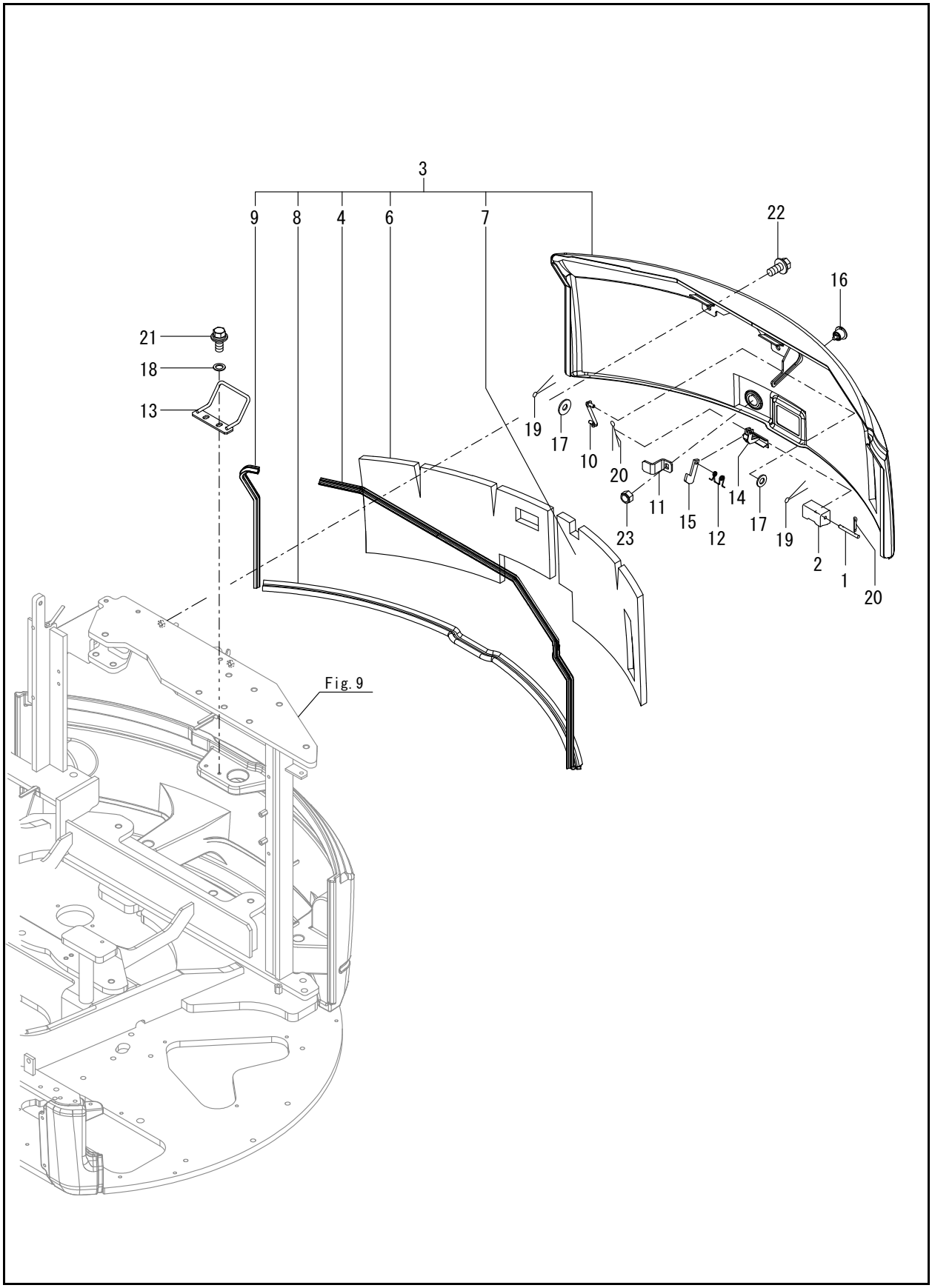

FIG. 59 - BONNET (REAR)

Ref. No.	Part No.	Description	Qty.
1	50281141	SHAFT	1
2	50281142	COVER,BONNET LOCK	1
3	50286367	COVER ASSY (use with labels 24A, 24B, 24C)	1
4	50282887	SEAL	1
6	50283610	EV,BONNET A 1	1
7	50283611	EV,BONNET A 2	1
8	50283612	SEAL,RUBBER 1280	1
9	50283618	SEAL,RUBBER 430	1
10	50281051	ROD,STOPPER	1
11	50281143	PLATE,ROCK	1
12	50281351	SPRING, CATCH	1
13	50283966	CATCH ASSY,LOCK	1
14	50282713	LEVER, LOCK	1
15	50280794	CATCHER	1
16	50280889	KEY ASSY, CYLINDER	1
17	50282380	WASHER 8, POLISHED	2
18	50282387	WASHER 10	2
19	50282418	COTTER PIN 2.0X20	2
20	50282418	COTTER PIN 2.0X20	2
21	50282516	BOLT W/WASHER M10X25	2
22	50282539	BOLT 10X25 W/PLW+SPW	2
23	50282576	U-NUT M10	1
24A	50281425	LABEL, ENG ROOM (see Page 4, Page 6)	1
24B	50281026	LABEL,SWING AREA US (see Page 4, Page 6)	1
24C	50281028	LABEL, ENG,COVER US (see Page 4, Page 6)	1

FIG. 61 - BONNET (FRONT)

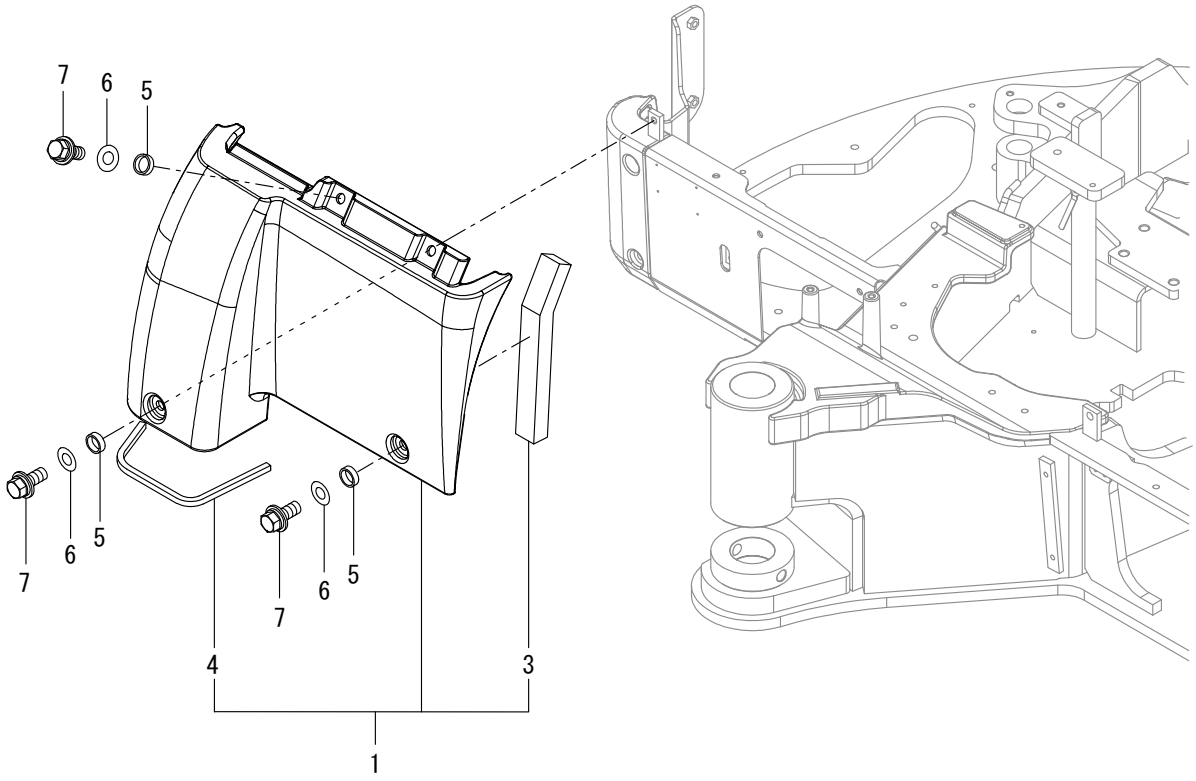

FIG. 61 - BONNET (FRONT)

Ref. No.	Part No.	Description	Qty.
1	50283613	BONNET	1
3	50286518	SEAL	1
4	50286519	TRIM	1
5	50283614	COLOR 13X16X5	4
6	50282387	WASHER 10	4
7	50282516	BOLT W/WASHER M10X25	4

FIG. 62 - BONNET (LEFT)

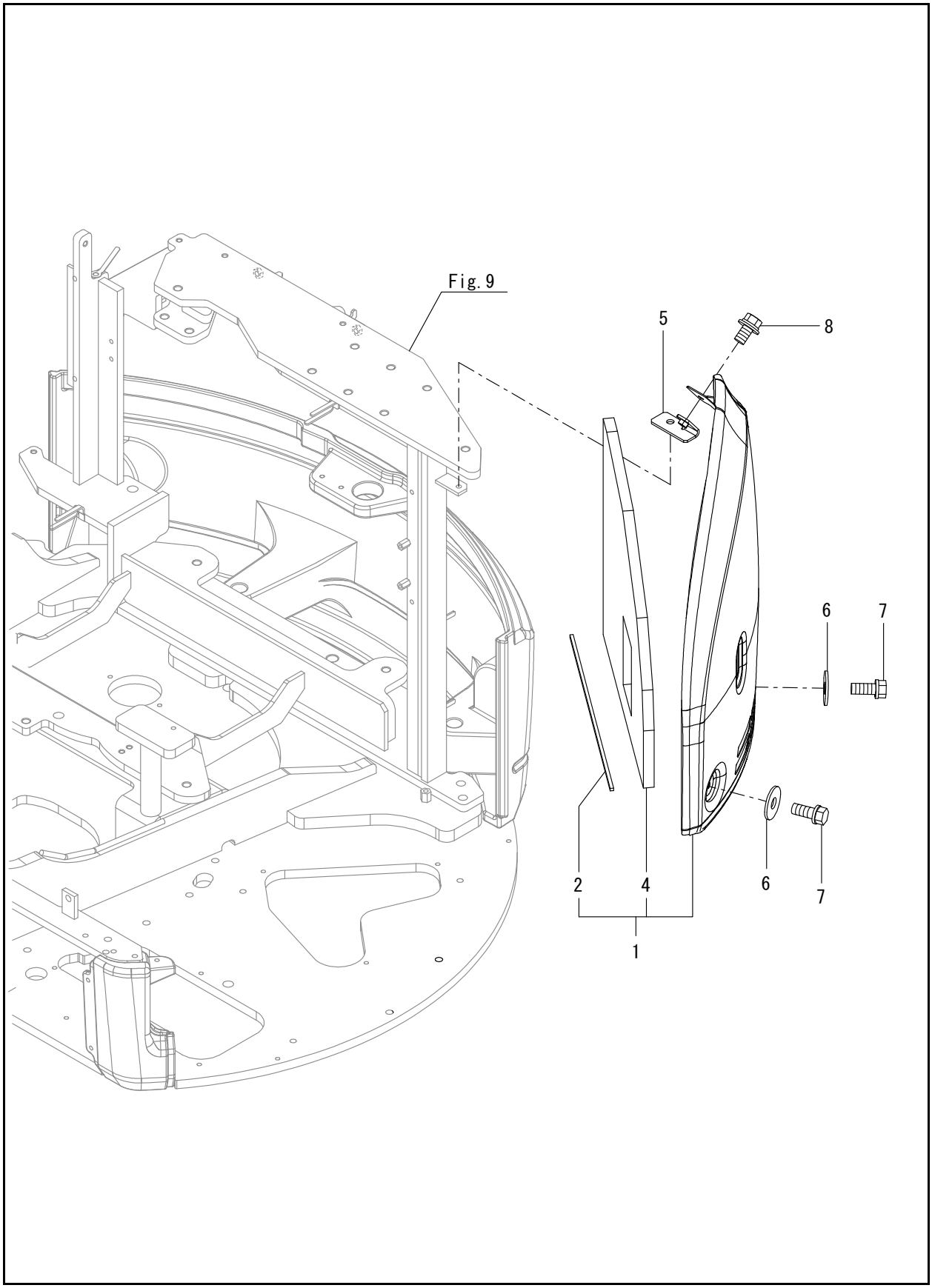

FIG. 62 - BONNET (LEFT)

Ref. No.	Part No.	Description	Qty.
1	50286289	COVER ASSY (use with label 9A)	1
2	50283083	SEAL	1
4	50283616	EV,BONNET L	1
5	50283617	STAY,A BONNET L ASSY	1
6	50282387	WASHER 10	2
7	50282516	BOLT W/WASHER M10X25	2
8	50282539	BOLT 10X25 W/PLW+SPW	2
9A	50281024	LABEL, BATTERY US (see Page 4, Page 6)	1

FIG. 64 - BONNET (RIGHT)

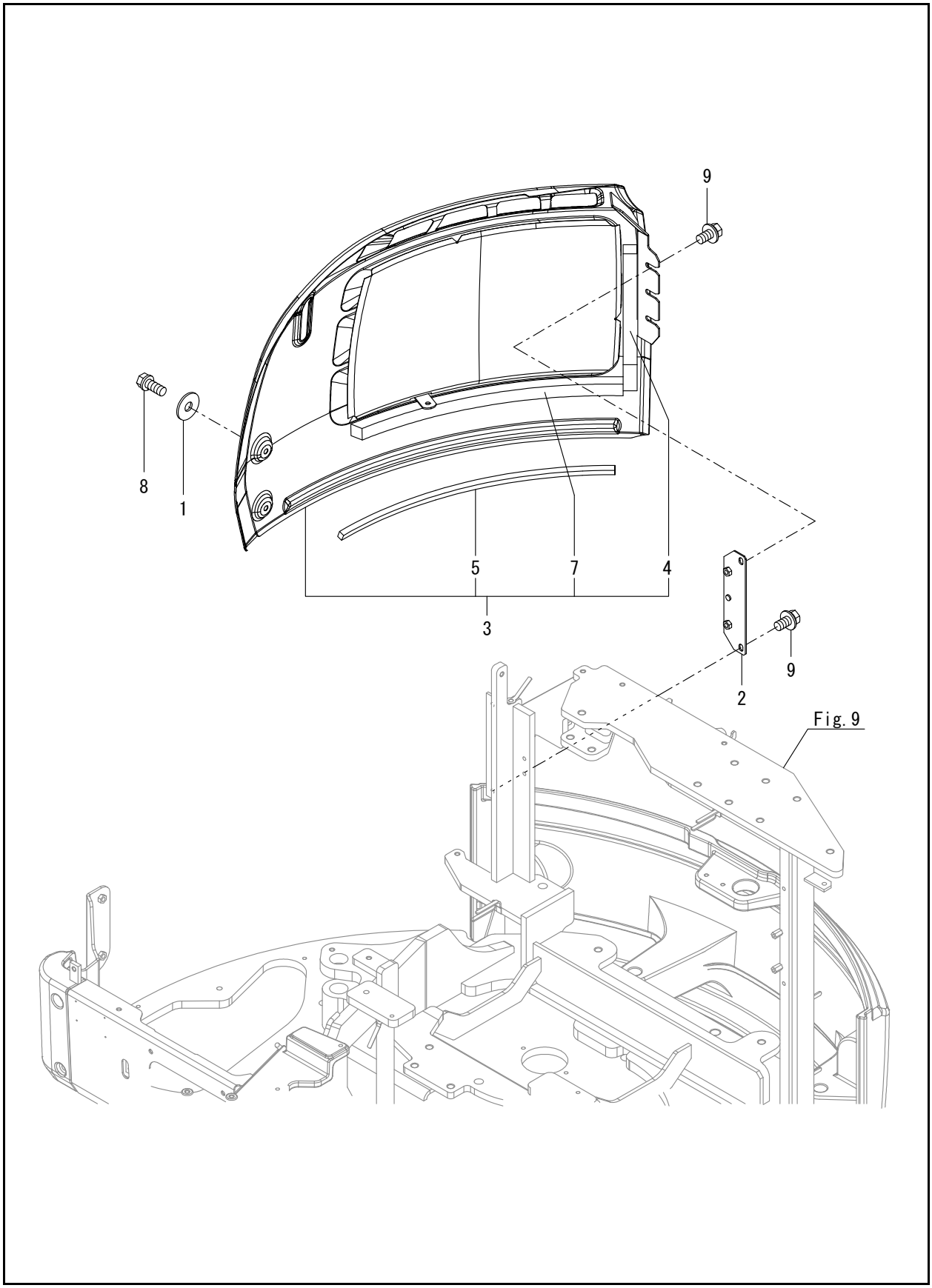

FIG. 64 - BONNET (RIGHT)

Ref. No.	Part No.	Description	Qty.
1	50282969	WASHER	2
2	50283608	BRACKET ASSY,BR	1
3	50286291	COVER ASSY RT	1
4	50283528	SEAL,WEIGHT	1
5	50283250	EDGE RUBBER, 980	1
7	50283621	SEAL,BONNET R	1
8	50282516	BOLT W/WASHER M10X25	2
9	50282538	BOLT M10X 20	4

FIG. 66 - CANOPY

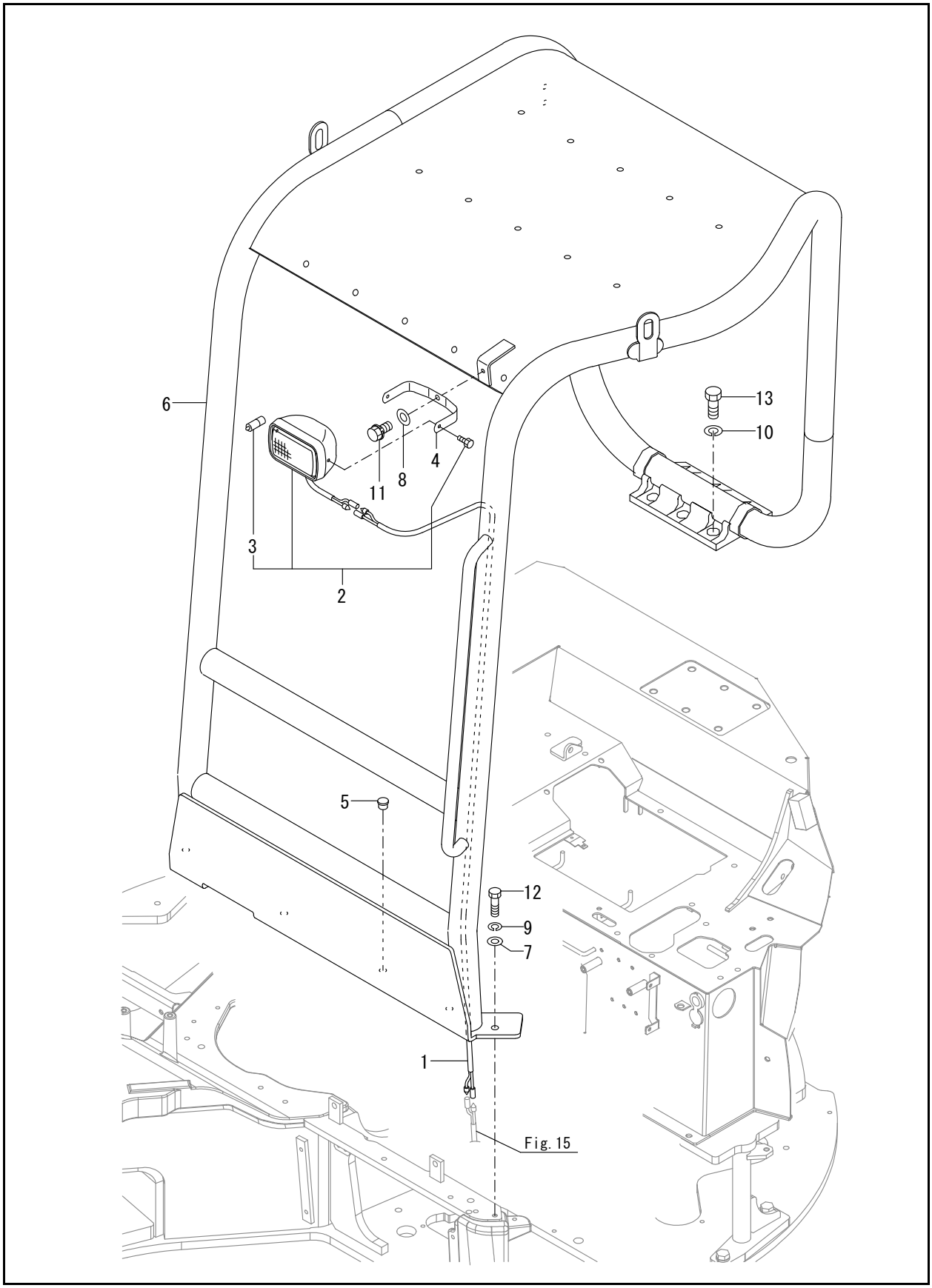

Ref. No.	Part No.	Description	Qty.
1	50282956	HARNESS,CANOPY LAMP	1
2	50283431	LIGHT ASSY	1
3	50283432	VALVE 12V55W	1
4	50286197	LAMP STAY	1
5	50283532	ANCHOR CLIP	1
6	50283229	CANOPY ASSY, ROPS (use with labels 14A, 14B, 14C, 14D, 14E, 14F)	1
7	50282756	WASHER	4
8	138111	WASHER/POLISHED	1
9	425-34902	SPRING WASHER 12	4
10	50282396	SPRING WASHER 16	6
11	50282515	BOLT W/WASHER M10X20	1
12	50284109	BOLT 10.9 M12 X 4	4
13	50282552	BOLT 10.9 16X40	6
14A	50283361	LABEL, LIFT Q US (see Page 4)	1
14B	50281020	LABEL,SLOPE US (see Page 4)	1
14C	50281022	LABEL, TRANSPORT US (see Page 4)	1
14D	50281025	LABEL, NEUTRAL US (see Page 4)	1
14E	50281031	LABEL, ROPS US (see Page 4)	1
14F	50281032	LABEL, SEAT BELT US (see Page 4)	1

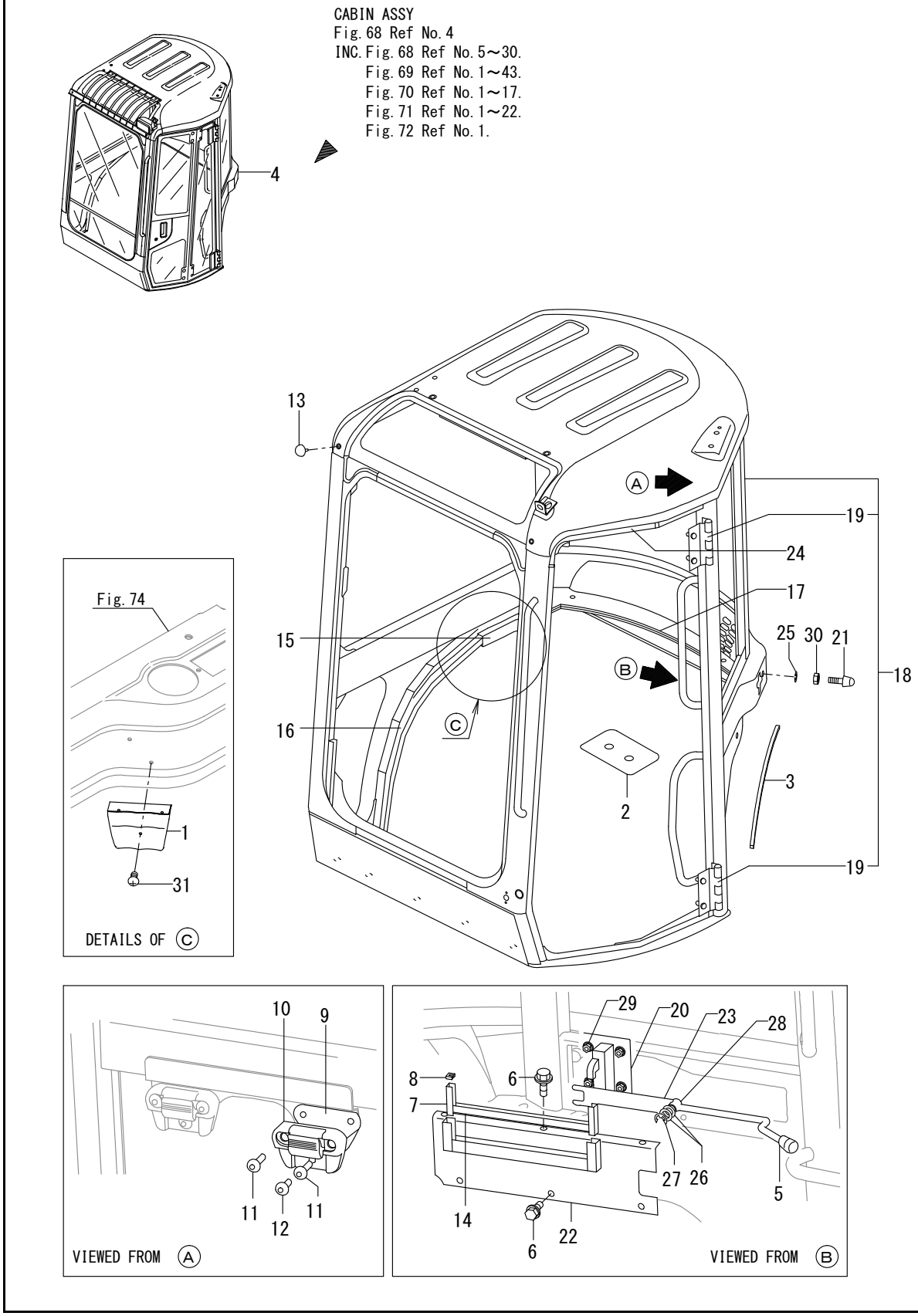
CABIN ASSY
Fig. 68 Ref No. 4
INC. Fig. 68 Ref No. 5～30.
Fig. 69 Ref No. 1～43.
Fig. 70 Ref No. 1～17.
Fig. 71 Ref No. 1～22.
Fig. 72 Ref No. 1.
4
13
A
19
24
17
25
30
21
18
15
B
16
C
2
3
19
Fig. 74
1
31
DETAILS OF C
10
9
11
12
11
VIEWED FROM A
29
20
23
28
8
6
7
27
26
5
14
22
6
VIEWED FROM B

Ref. No.	Part No.	Description	Qty.
1	50282848	ASHTRAY	1
2	50282971	SPACER, CABIN	1
3	50282789	RUBBER, SEAL B	1
4	50283622	CABIN ASSY	1
5	50284020	KNOB CLUTCH(RED)	1
6	50281318	BOLT 8X 16	6
7	50282924	CHANNEL	2
8	50282925	CAP;CHANNEL	2
9	50282926	PLATE ASSY LOW GLASS	2
10	50282927	HOLDER GLASS UP	2
11	50282928	SCREW(TORX)	4
12	50282929	SCREW(TORX)	2
13	50282930	CLIP, TREE	4
14	50283004	GLASS RUN	1
15	50283012	SEAL A	1
16	50283013	SEAL B	1
17	50283014	SEAL	1
18	50283624	FRAME ASSY, CABIN (use with labels 32A, 32B)	1
19	50283015	HINGE ASSY, DOOR	2
20	50282776	LOCK ASSY	1
21	50282801	RUBBER	1
22	50283038	COVER	1
23	50283039	LEVER	1
24	50283043	SEAL	1
25	50282377	WASHER 10	1
26	50282378	WASHER 12	2
27	50284052	CIRCLIP E-10	1
28	50284092	BUSHING 12X20	1
29	425-35206	NUT M8 W/WASHER	4
30	50282597	NUT 10	2
31	50284061	SCREW 4X10	3
32A	50281031	LABEL, ROPS US (see Page 6)	1
32B	50281032	LABEL, SEAT BELT US (see Page 6)	1

Z45 - COMPACT EXCAVATOR

FIG. 69 - CABIN (GLASS)

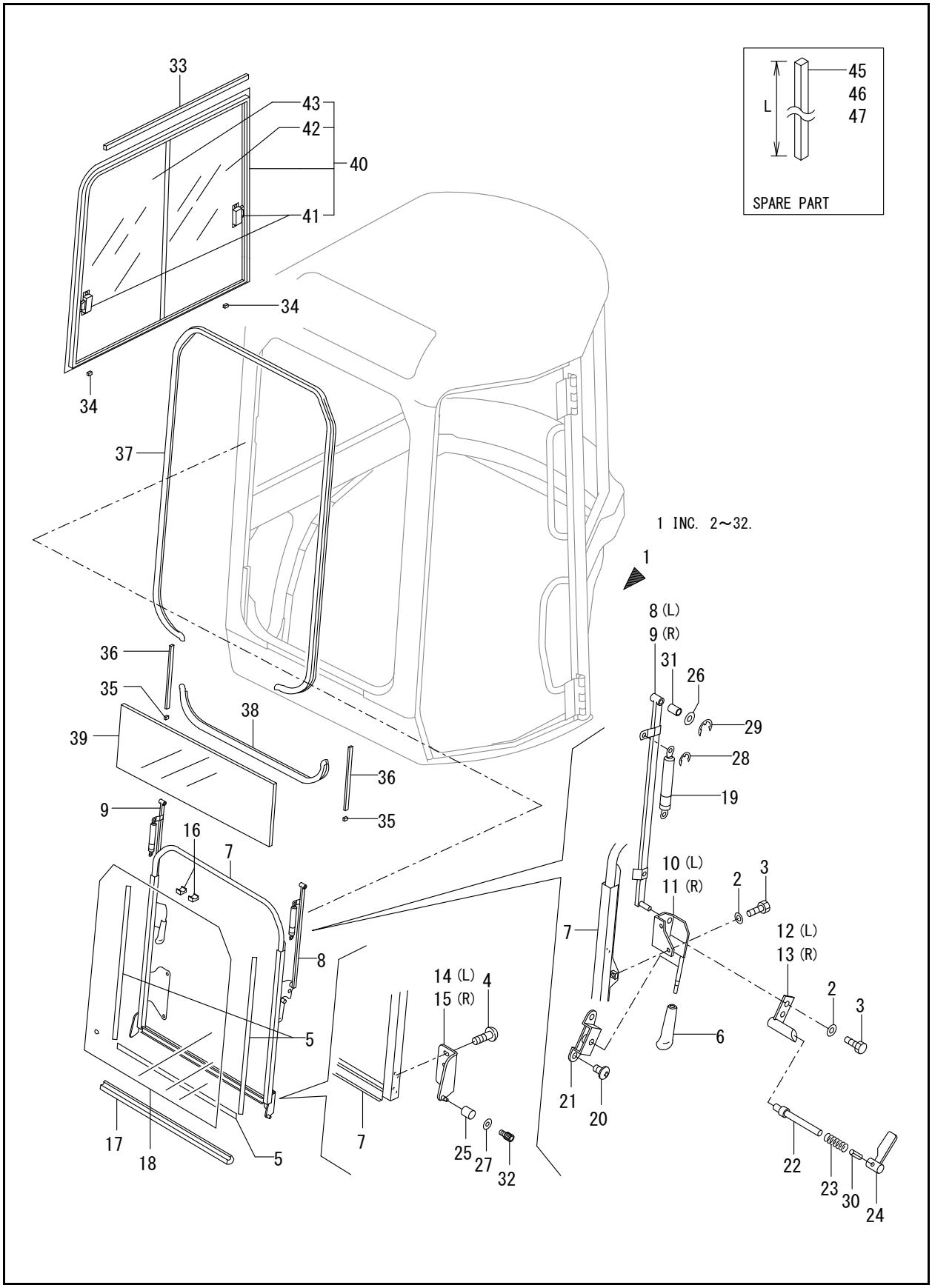

Ref. No.	Part No.	Description	Qty.
1	50283072	SASH,FRONT UPPER	1
2	50282973	HD WASHER	8
3	50282974	BOLT 8X16	8
4	50282976	SCREW TORX	4
5	50282979	SEAL	3
6	50282923	KNOB	2
7	50282993	FRAME ASSY, FRONT	1
8	50282994	LINK	1
9	50282995	LINK	1
10	50282996	HANDLE L	1
11	50282997	HANDLE R	1
12	50282998	BRACKET	1
13	50282999	BRACKET	1
14	50283001	ROLLER SHAFT L	1
15	50283002	ROLLER SHAFT R	1
16	50283005	RUBBER	2
17	50283007	RUBBER	1
18	50283009	GLASS UP(F/W	1
19	50283011	SPRING	2
20	50283218	SCREW-TORX	4
21	50283219	HOLDER ASSY,F/W	2
22	50283220	LATCH PIN	2
23	50283221	SPRING	2
24	50283222	LEVER ASSY,F/W	2
25	50282902	ROLLER	2
26	50282378	WASHER 12	4
27	50282379	WASHER 6, POLISHED	2
28	425-34970	CIRCLIP E-6	4
29	50284051	CIRCLIP E- 8	4
30	50284054	SPRING PIN 3X12	2
31	50284092	BUSHING 12X20	4
32	50284132	BOLT, M6 X 10	2
33	50282977	SEAL	1
34	50282932	SPACER	2
35	50282933	STOPPER RUBBER	2
36	50283003	GLASS RUN 270	2
37	50283006	RUBBER	1
38	50283008	RUBBER	1
39	50283010	GLASS LOW(F/W	1
40	50283027	SASH ASSY (W/GLASS)	1
41	50282934	LOCK ASSY, SASH	2
42	50283028	SASH GLASS, REAR (use with labels 48A, 48B, 48C, 48D)	1
43	50283029	SASH GLASS, FRONT	1
45	50283245	DAM SEAL 1000MM	1
46	50283246	DAM SEAL 2000MM	1
47	50283247	DAM SEAL 3000MM	1
48A	50281036	LABEL, WINDOW US (see Page 6)	1
48B	50281174	LABEL, PIN US (see Page 6)	1
48C	50281020	LABEL,SLOPE US (see Page 6)	1
48D	50281025	LABEL, NEUTRAL US (see Page 6)	1

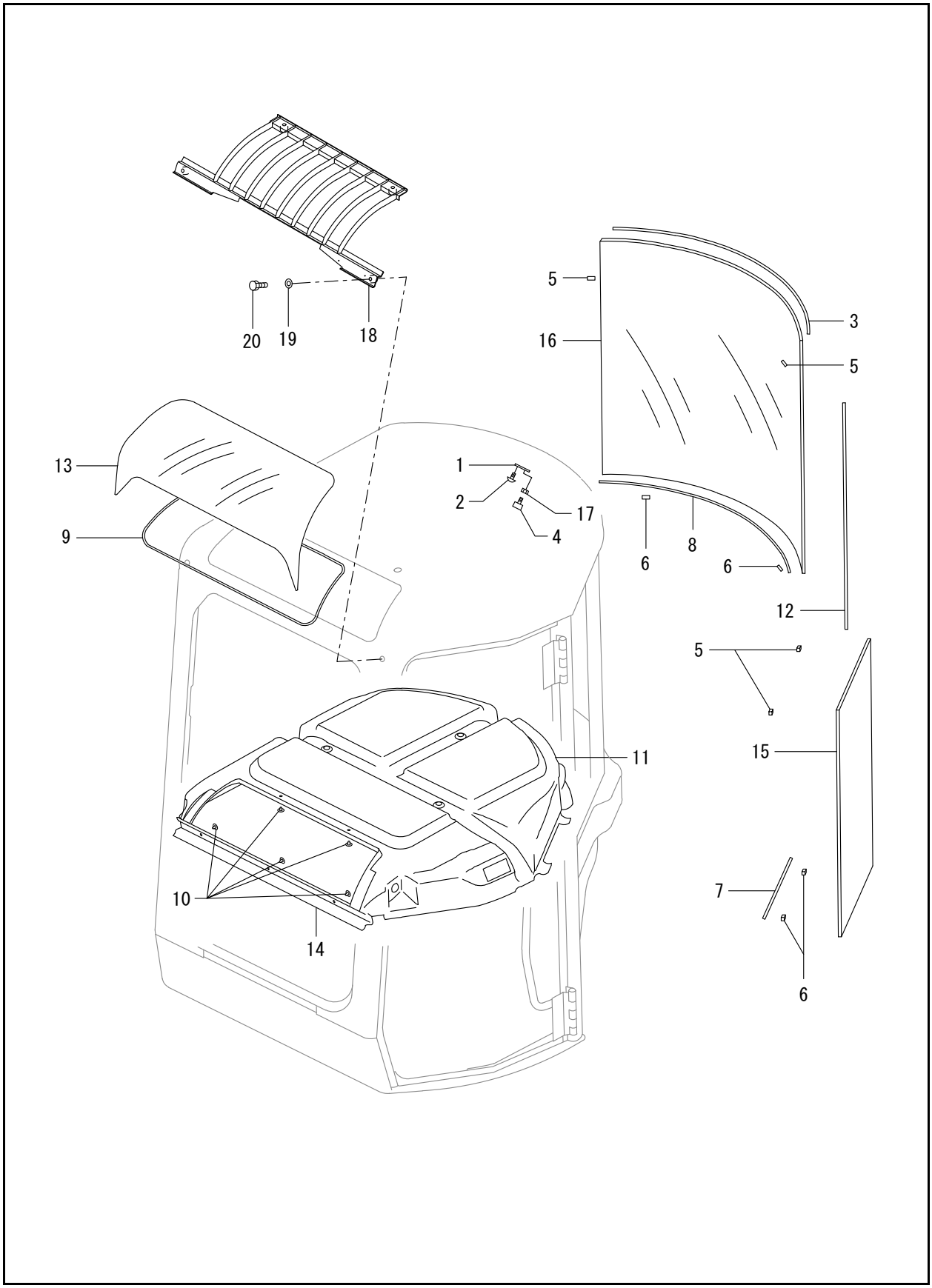
20
19
18
5
16
3
5
13
1
2
17
4
9
6
8
6
12
5
15
11
10
14
7
6

Ref. No.	Part No.	Description	Qty.
1	50282975	PLATE	1
2	50282976	SCREW TORX	1
3	50282978	MOLD	1
4	50282980	RUBBER	1
5	50282982	SPACER	4
6	50282983	SPACER	4
7	50282984	SEAL	1
8	50282985	SEAL	1
9	50282986	SEAL	1
10	50282931	FASTERNER	15
11	50283016	INNER ROOF	1
12	50283020	SEAL	1
13	50283023	SUN ROOF	1
14	50283024	INNER FRONT	1
15	50283025	GLASS L	1
16	50283026	GLASS REAR (use with label 21A)	1
17	50282597	NUT 10	1
18	50283235	GUARD, FOPS	1
19	138111	WASHER/POLISHED	4
20	50284107	BOLT M10 X 35	4
21A	50283361	LABEL, LIFT Q US (see Page 6)	1

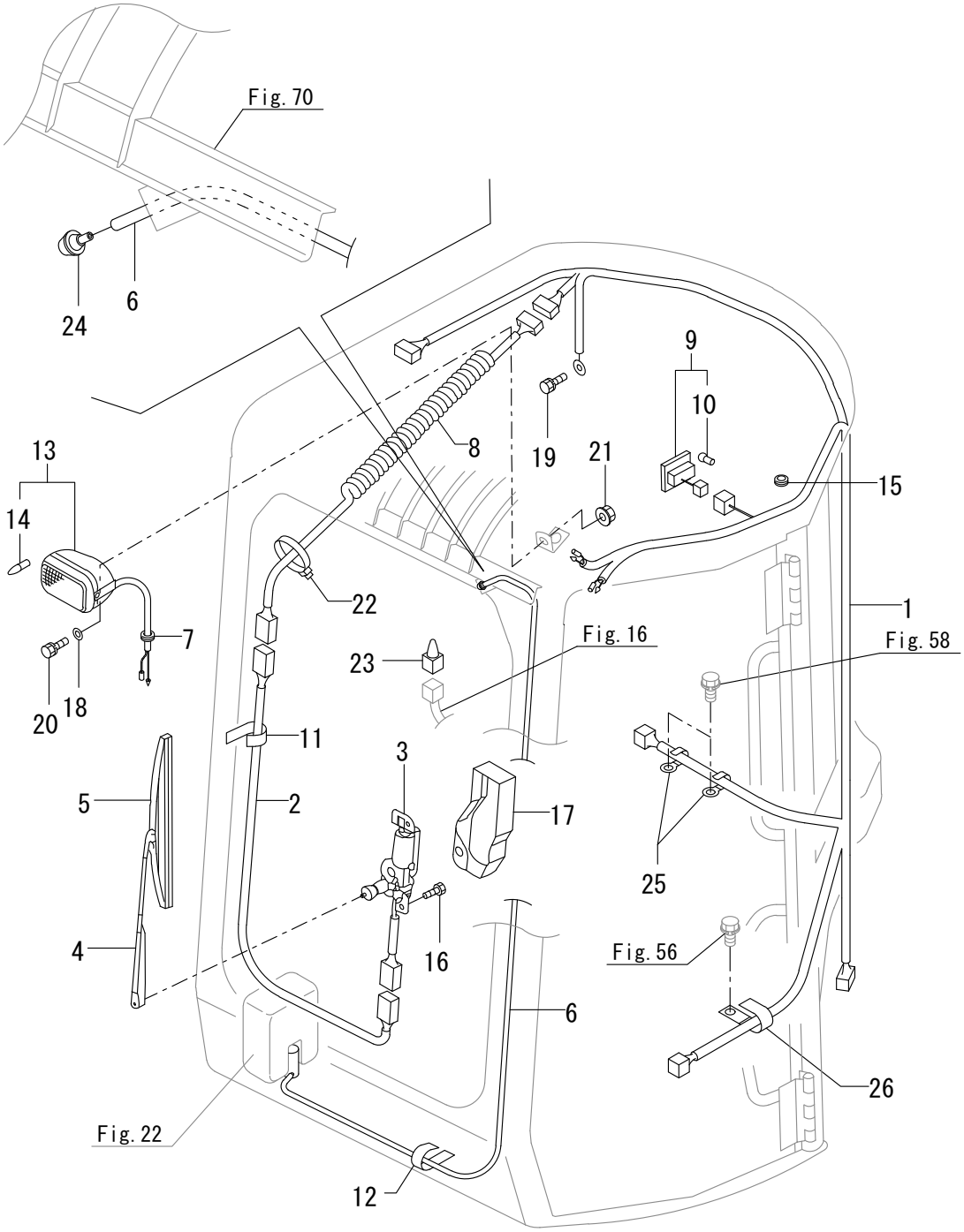
Fig. 70
24
6
9
10
8
19
21
15
13
14
22
1
Fig. 16
Fig. 58
23
7
20
18
11
3
5
2
17
25
4
16
Fig. 56
6
26
Fig. 22
12

FIG. 71 - CABIN (ELECTRIC PART)

Ref. No.	Part No.	Description	Qty.
1	50282957	HARNESS A,WIRE(CABIN	1
2	50282958	WIRE HARNESS B	1
3	50282959	WIPER MOTOR	1
4	50282960	WIPER ARM	1
5	50282961	WIPER BLADE	1
6	50283233	HOSE, WASHER	1
7	50282935	GROMMET	2
8	50282936	HARNESS-CURL	1
9	50282937	ROOM LAMP	1
10	50282939	BULB	1
11	50282938	CLAMP HARNESS	3
12	50282938	CLAMP HARNESS	3
13	50282940	WORKING LAMP	1
14	50281132	BULB,12V 55W	1
15	50283030	GROMMET	1
16	50282947	SET SCREW	2
17	50282948	COVER WIPER-MOTOR	1
18	50282380	WASHER 8, POLISHED	1
19	50282506	BOLT W/WASHER M8X16	1
20	50282562	BOLT M 8X 20 PLATED	1
21	425-35206	NUT M8 W/WASHER	1
22	50284153	BAND 146	1
23	50282847	HARNESS	1
24	50284005	WASHER,NOZZLE	1
25	50280799	CLAMP 10X70	2
26	50284008	CLAMP A,SM.&DYN.CORD	2

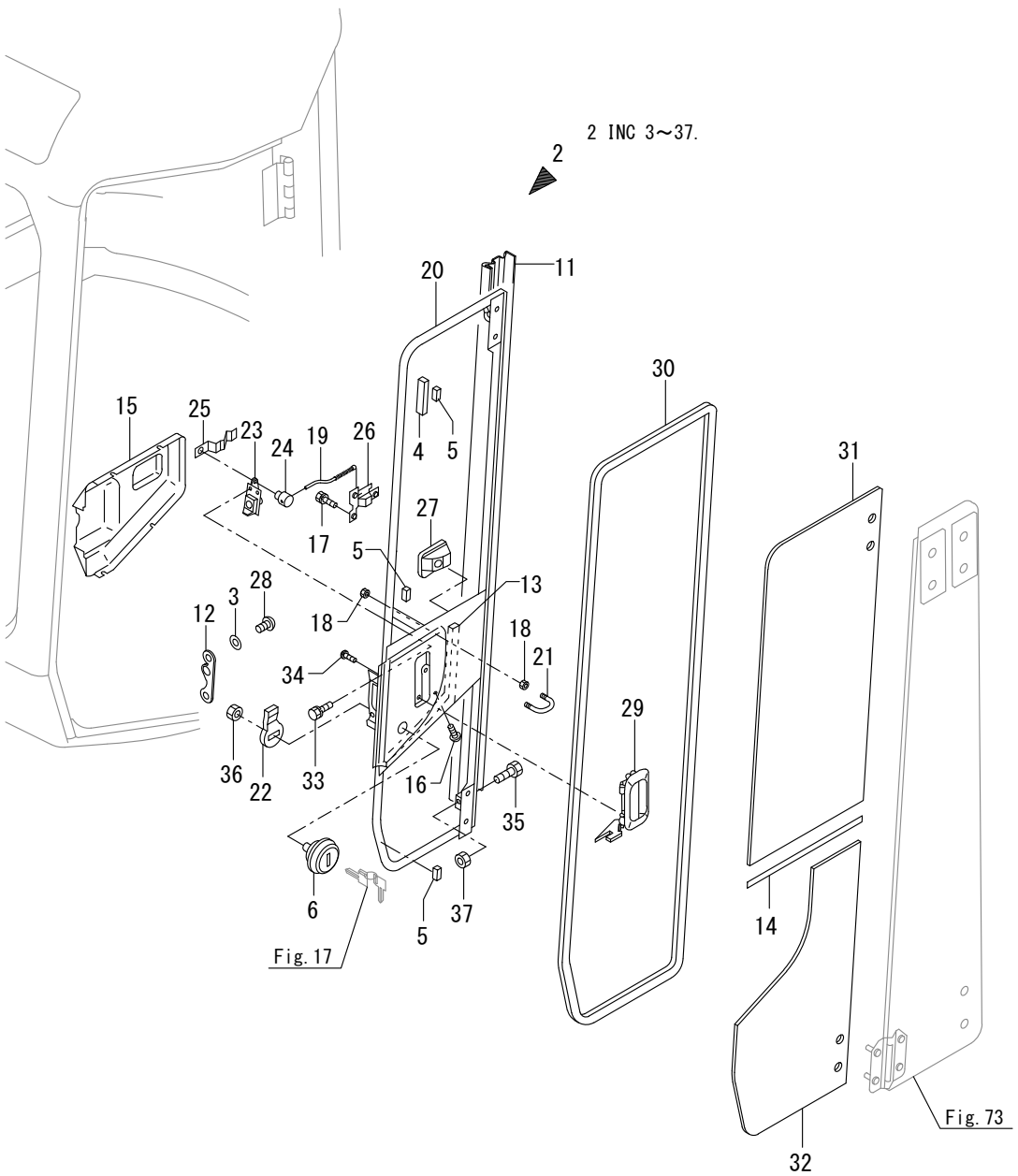
CABIN DOOR ASSY
Fig. 72 Ref No. 1
INC Fig. 72 Ref No. 2.
Fig. 73 Ref No. 1.
1
2 INC 3～37.
2
20
11
30
15
25
23
24
19
26
4
5
31
27
17
5
13
28
3
12
18
18
21
34
29
36
22
33
16
35
6
5
37
14
Fig. 17
Fig. 73
32

Ref. No.	Part No.	Description	Qty.
1	50283073	CABIN,DOOR	1
2	50283074	DOOR ASSY, FRONT	1
3	50282973	HD WASHER	2
4	50282981	STOPPER	1
5	50282982	SPACER	3
6	50280889	KEY ASSY, CYLINDER	1
11	50282988	COVER, RUBBER	1
12	50282992	STRIKER	1
13	50283000	BRACE	1
14	50283021	SEAL	1
15	50282942	COVER, LATCH	1
16	50283022	SCREW,6X16	4
17	50282946	SCREW	3
18	50282899	NUT	4
19	50282900	ROD	1
20	50283031	FRAME ASSY, DOOR	1
21	50282901	DOOR HOOK	1
22	50280865	LOCK PLATE	1
23	50282777	LOCK ASSY	1
24	50282778	PIN	1
25	50282779	SPRING	1
26	50282780	HANDLE ASSY	1
27	50282781	COVER	1
28	50282949	SCREW	2
29	50282782	HANDLE,OUTER	1
30	50283032	RUBBER A	1
31	50283040	GLASS FU	1
32	50283041	GLASS FU	1
33	50282502	BOLT M 6X 16	3
34	50282545	SCREW, M6X12	2
35	50284118	BOLT M10 X 30 PLATED	1
36	50282597	NUT 10	1
37	50282597	NUT 10	1

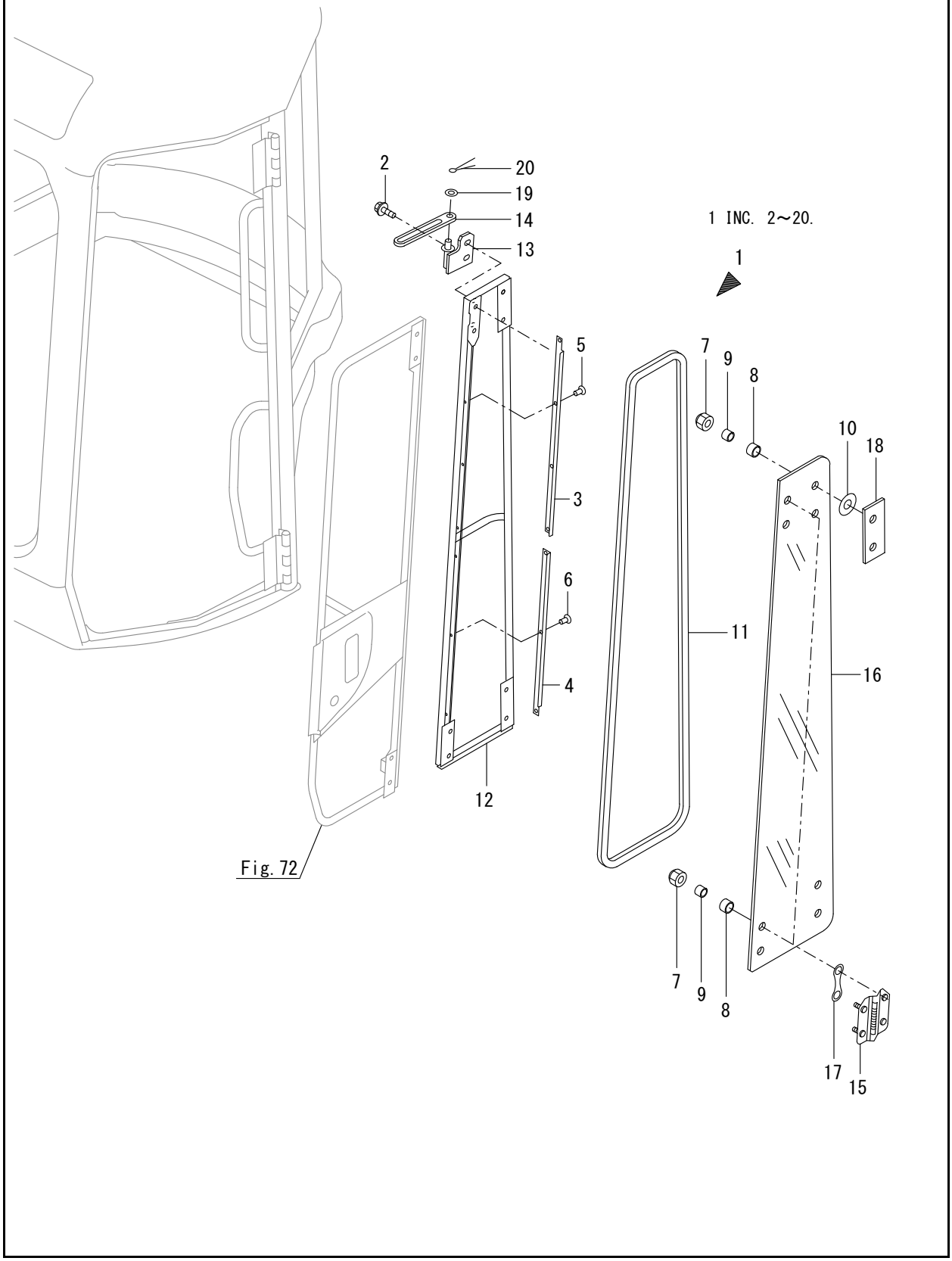
1 INC. 2～20.
1
2
20
19
14
13
5
3
6
4
12
7
9
8
10
18
11
16
7
9
8
17
15
Fig. 72

FIG. 73 - CABIN DOOR (REAR)

Ref. No.	Part No.	Description	Qty.
1	50283075	DOOR ASSY, REAR	1
2	50281318	BOLT 8X 16	2
3	50282989	UPPER PLATE,DOOR REAR	1
4	50282990	LOWER PLATE,DOOR REAR	1
5	50282991	TORX SCREW 6X16	4
6	50282991	TORX SCREW 6X16	3
7	50282941	NUT	12
8	50282943	TUBE	12
9	50282944	PIPE	12
10	50282945	PACKING	4
11	50283033	RUBBER, FRAME B ASSY	1
12	50283034	FRAME ASSY, DOOR	1
13	50283035	PLATE	1
14	50283036	GUIDE, STOPPER	1
15	50283037	HINGE	2
16	50283042	GLASS R, DOOR	1
17	50283044	GASKET	8
18	50283045	COVER,HINGE	2
19	50282380	WASHER 8, POLISHED	2
20	50282417	COTTER PIN 2.0X16	2

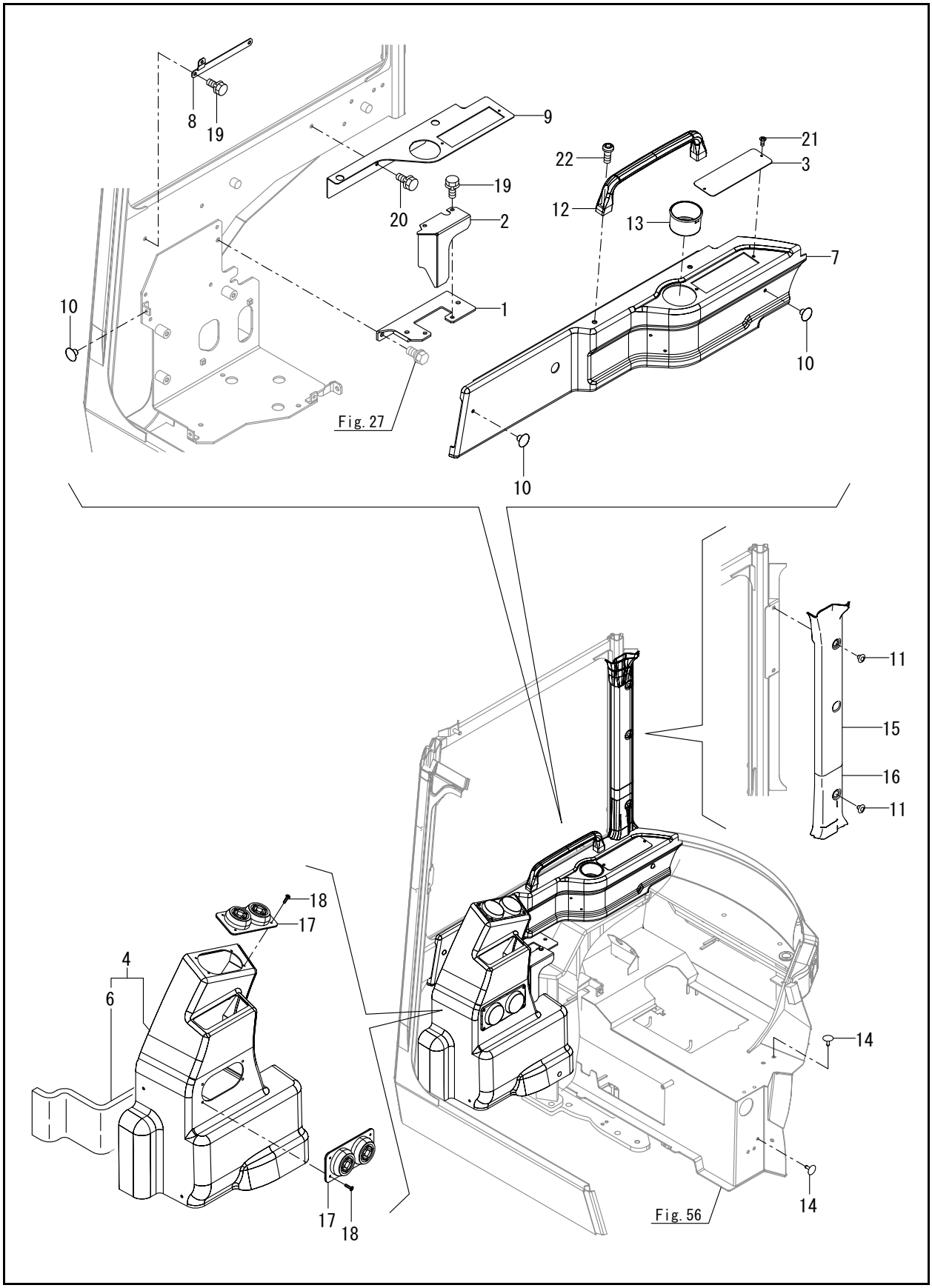
8
19
9
20
19
2
1
10
22
21
3
12
13
7
10
10
Fig. 27
11
15
16
11
18
17
4
6
14
17
18
14
Fig. 56

Ref. No.	Part No.	Description	Qty.
1	50283452	BRACKET ASSY	1
2	50283454	COVER,BR	1
3	50283480	COVER, RADIO	1
4	50283545	COVER ASSY,CAB F (use with label 23A)	1
6	50283547	EV,COVER CAB F	1
7	50283546	COVER,CAB S	1
8	50283589	STAY F ASSY,SIDE	1
9	50283590	STAY ASSY, TUBE	1
10	50282362	CLIP	5
11	50282987	CLIP 11	3
12	50282823	GRIP	1
13	50282824	HOLDER	1
14	50282889	CLIP	2
15	50283018	RB PILLAR COVER A	1
16	50283019	COVER B RB PILLER	1
17	50284023	GRILLE,ROUND	2
18	197787	SCREW 5 X 16	8
19	50282506	BOLT W/WASHER M8X16	2
20	50282507	BOLT W/WASHER M8X20	4
21	50284105	SCREW M4 X 20	2
22	50284138	SCREW, M8X20	2
23A	50281022	LABEL, TRANSPORT US (see Page 6)	1

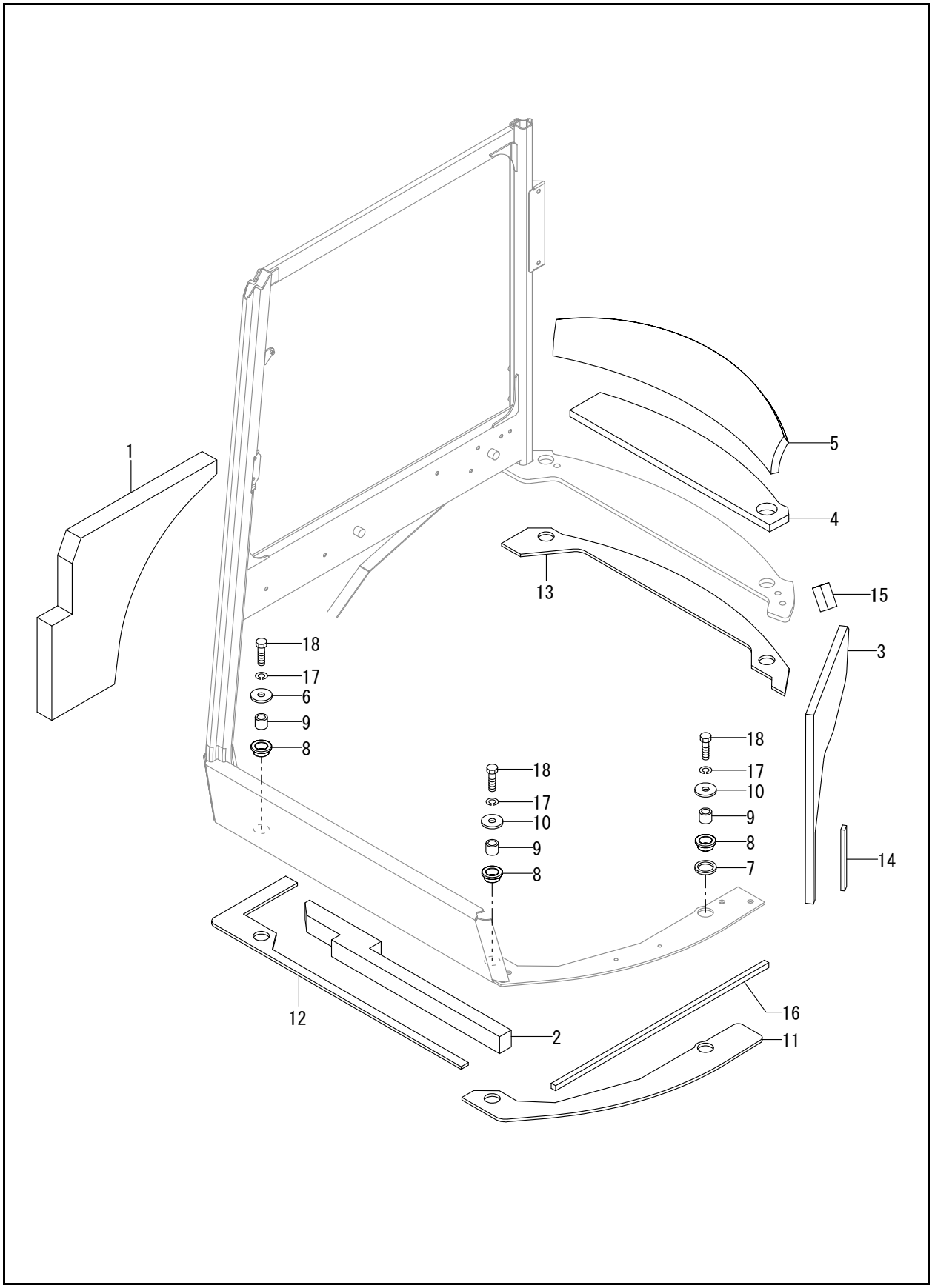
1
5
4
13
15
3
18
17
6
9
8
18
17
10
9
8
18
17
10
9
8
7
14
12
2
16
11

Ref. No.	Part No.	Description	Qty.
1	50283548	SEAL,CAB RH	1
2	50283549	SEAL,CAB F	1
3	50283625	EV,CABIN C	1
4	50283626	EV,CABIN A	1
5	50283627	EV,CABIN B	1
6	50283628	WASHER60X17X6	1
7	50283629	WASHER52X38X6	1
8	50283630	GROMET 30X36X50	5
9	50283631	COLLER 20X30X26	5
10	50283632	WASHER52X17X6	4
11	50283633	PATT A	1
12	50283634	PATT C	1
13	50283635	PATT D	1
14	50283636	SEAL CAB 180	1
15	50283637	SEAL,CAB 60	1
16	50283638	SEAL,CAB 730	1
17	50282396	SPRING WASHER 16	5
18	50284110	BOLT 16*55	5

CABIN SPEC.

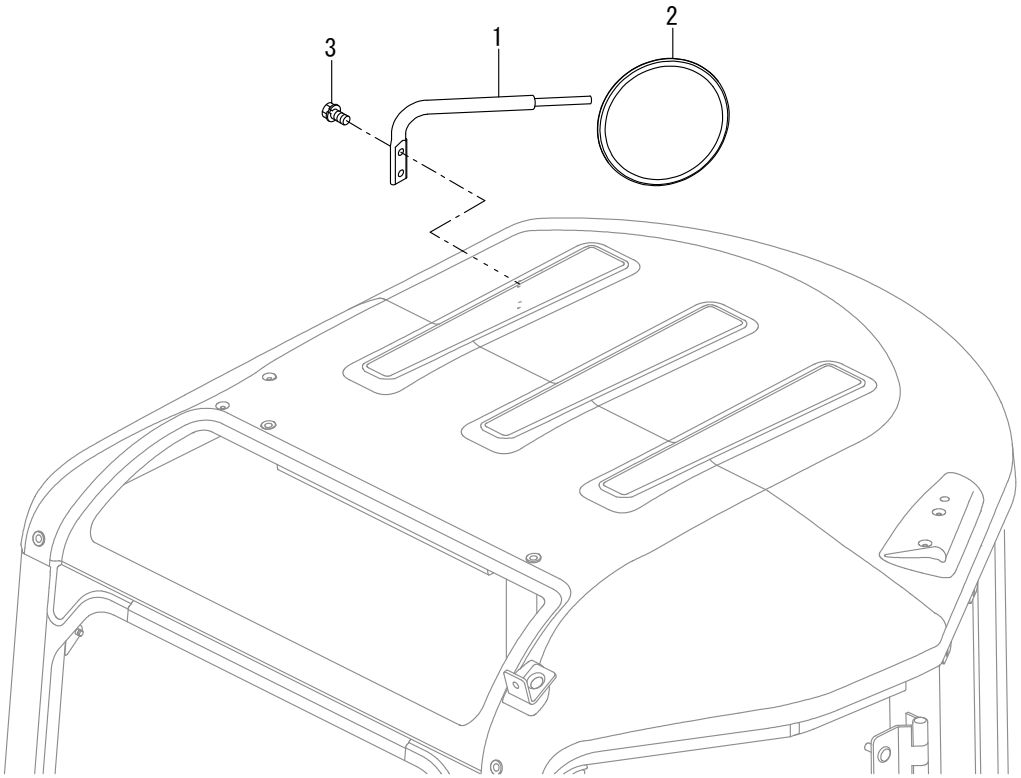

CANOPY SPEC.

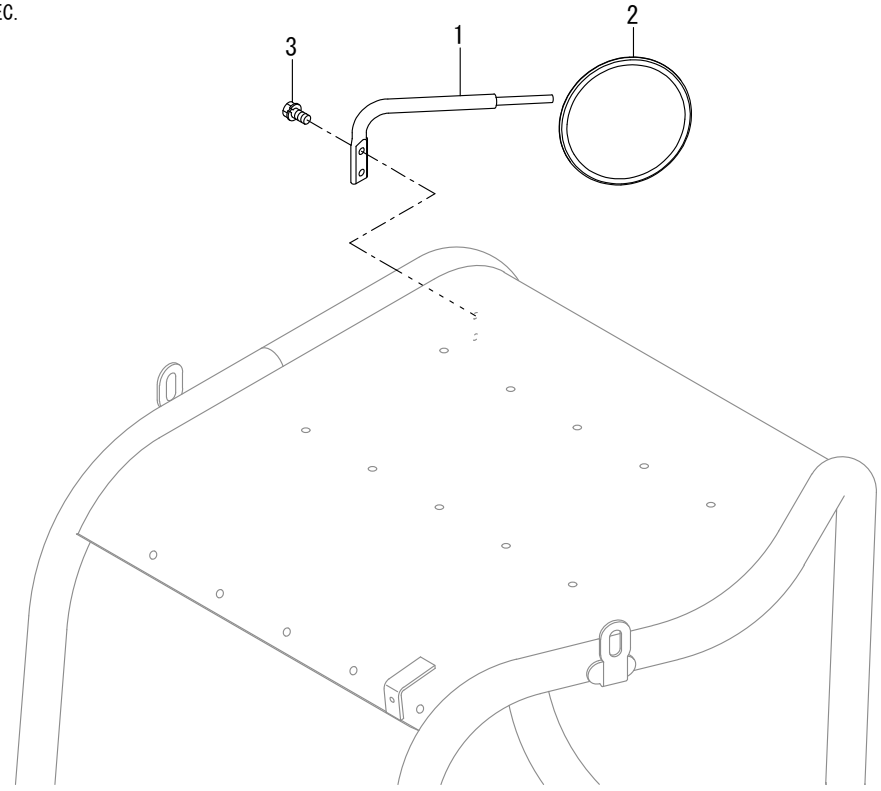

FIG. 76 - REARVIEW MIRROR

Ref. No.	Part No.	Description	Qty.
1	50283322	BRACKET, MIRROR	1
2	50281414	REARVIEW MIRROR	1
3	50282516	BOLT W/WASHER M10X25	2

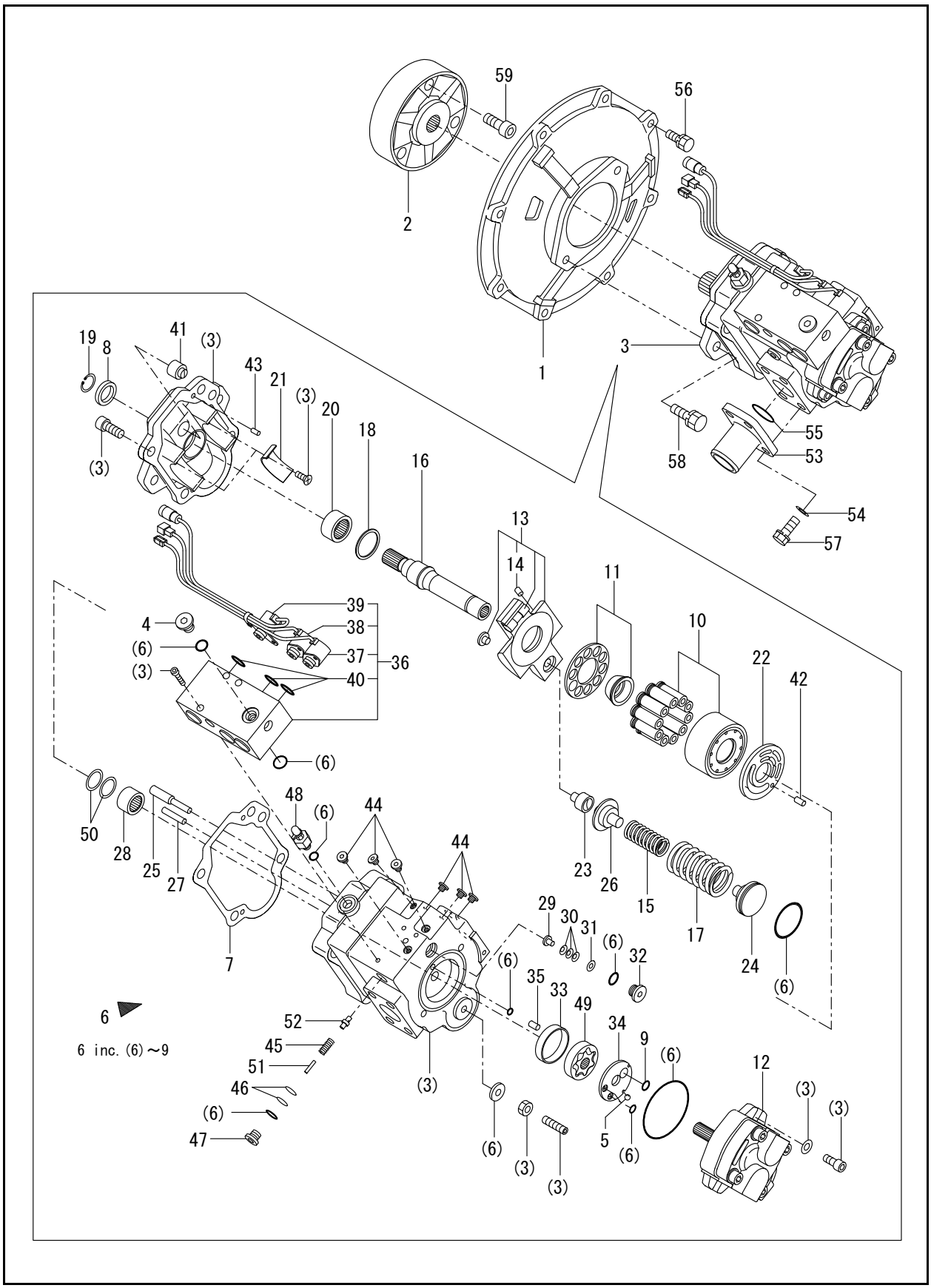
59
56
2
1
3
19
8
41
(3)
43
21
(3)
20
18
16
(3)
58
55
53
54
57
13
14
11
10
22
42
39
38
37
36
4
(6)
(3)
40
(6)
50
28
25
27
48
(6)
44
44
7
23
26
15
17
24
(6)
29
30
31
(6)
32
(6)
35
33
49
34
9
(6)
12
(3)
(3)
5
(6)
6
6 inc. (6)～9
52
45
51
46
(6)
47
(3)
(6)
(3)
(3)

Ref. No.	Part No.	Description	Qty.
1	50282815	COVER, FLYWHEEL	1
2	50282802	COUPLING	1
3	50283317	PUMP ASSY,HYD OIL	1
4	50280836	PLUG	1
5	50282704	BALL	1
6	50283125	SEAL KIT	1
7	50283131	GASKET	1
8	50283133	OIL SEAL	1
9	50283149	O-RING	1
10	50283126	CYLINDER BLOCK KIT	1
11	50283127	RETAINER	1
12	50283211	PUMP, GEAR	1
13	50283128	PLATE	1
14	50282849	ORIFICE	1
15	50283212	SPRING	1
16	50283129	SHAFT	1
17	50283213	SPRING	1
18	50283130	WASHER	1
19	50283132	RING	1
20	50283134	BEARING	1
21	50283135	BUSHING	2
22	50283137	PLATE, VALVE	1
23	50283138	HOLDER	1
24	50283214	SEAT, SPRING	1
25	50283139	PIN	1
26	50282825	SHEET,SPRING	1
27	50283140	PIN	1
28	50283142	BEARING	1
29	50283143	STOPPER	1
30	50283144	SPRING	3
31	50283145	WASHER	1
32	50283146	PLUG	1
33	50283147	BUSHING	1
34	50283148	PLATE	1
35	50283150	PIN	1
36	50283296	VALVE	1
37	50283176	SOLENOID B	1
38	50283177	SOLENOID A	1
39	50283178	SOLENOID C	1
40	50284087	O-RING 2 19011	3
41	50283152	STOPPER	1
42	50282708	PIN	1
43	50282708	PIN	2
44	50282919	PLUG	6
45	50282826	SPRING	1
46	50282827	SHIM	2
47	50282828	PLUG	1
48	50282829	BREEDER, AIR	1
49	50282830	ROTOR ASSY,TROCHOID	1
50	50282831	THRUST WASHER	2
51	50282832	PIN	1
52	50282833	POPPET	1
53	50282806	FLANGE	1
54	50282378	WASHER 12	4
55	50284082	O-RING 1A G-45.0	1
56	50282517	BOLT M10X 30	8
57	50282525	BOLT W/WASHER M12X30	4
58	50284102	BOLT M12 X 35	2
59	50284137	BOLT M12 X 40	3

FIG. 78 - BOOM CYLINDER

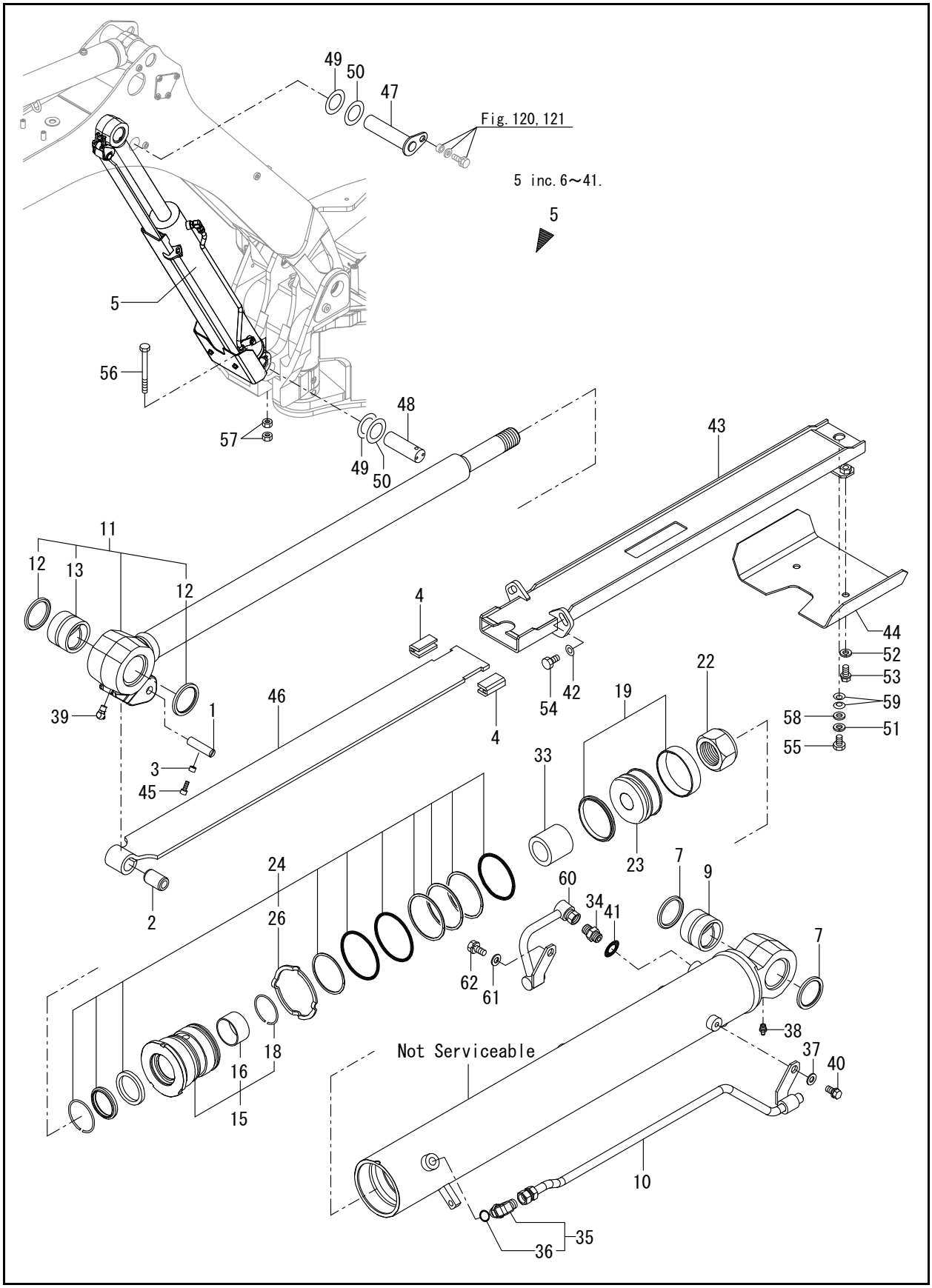

Ref. No.	Part No.	Description	Qty.
1	50283319	SHAFT,14X54	1
2	50283320	GROMMET	1
3	50283344	SPACER	1
4	50283321	SLIDE GUIDE	2
5	50283906	CYLINDER ASSY, BOOM	1
7	50281061	SEAL 50X60X4,DUST	2
9	50283908	BUSH, 50-64.5	1
10	50283640	PIPE ASSY,BOOM R	1
11	50283909	ROD ASSY, BOOM	1
12	50281061	SEAL 50X60X4,DUST	2
13	50283119	BUSHING	1
15	50283910	HEAD ASSY 100 55	1
16	50282759	BUSHING 55 35, ROD	1
18	50284150	RING 65, SPRING	1
19	50283261	SEAL SET, PISTON	1
22	50282760	U-NUT M39	1
23	50283911	PISTON,100 39	1
24	50283912	HEAD SEAL SET,100 55	1
26	50282761	LOCK WASHER	1
33	50283913	PLUNGER, CUSHION 62	1
34	50281350	JOINT	1
35	50280823	JOINT 90-3/8 ASSY	1
36	50282471	O-RING 1B P-14.0	1
37	138111	WASHER/POLISHED	1
38	50282497	NIPPLE PT1/8,GREASE	1
39	50282498	NIPPLE B,GREASE	1
40	50282515	BOLT W/WASHER M10X20	1
41	50282608	O RING P 14.0 HNBR	1
42	50283985	COLLOR	2
43	50283653	GUIDE ASSY	1
44	50283654	HOSE BOOM COVER	1
45	50283655	BOLT M16X16	1
46	50283325	SLIDE PLATE	1
47	50283899	PIN 50 X 225 CMP	1
48	50283979	PIN, 50 X142	1
49	50280899	SHIM 50X90X0.5	2
50	50280900	SHIM 50X90X1.2	2
51	50282393	SPRING WASHER 10	1
52	50282393	SPRING WASHER 10	2
53	50282515	BOLT W/WASHER M10X20	2
54	50284106	BOLT M10 X 25	2
55	50284117	BOLT M10 X 16 PLATED	1
56	50284126	BOLT M12 X 130 PLATED	1
57	210-32084	NUT, HEX M12 X 1.75	2
58	50282617	WASHER, BRAKE ARM	1
59	50282620	SPRING 16	2
60	50286293	BOOM PIPE	1
61	138111	WASHER/POLISHED	1
62	50282515	BOLT W/WASHER M10X20	1

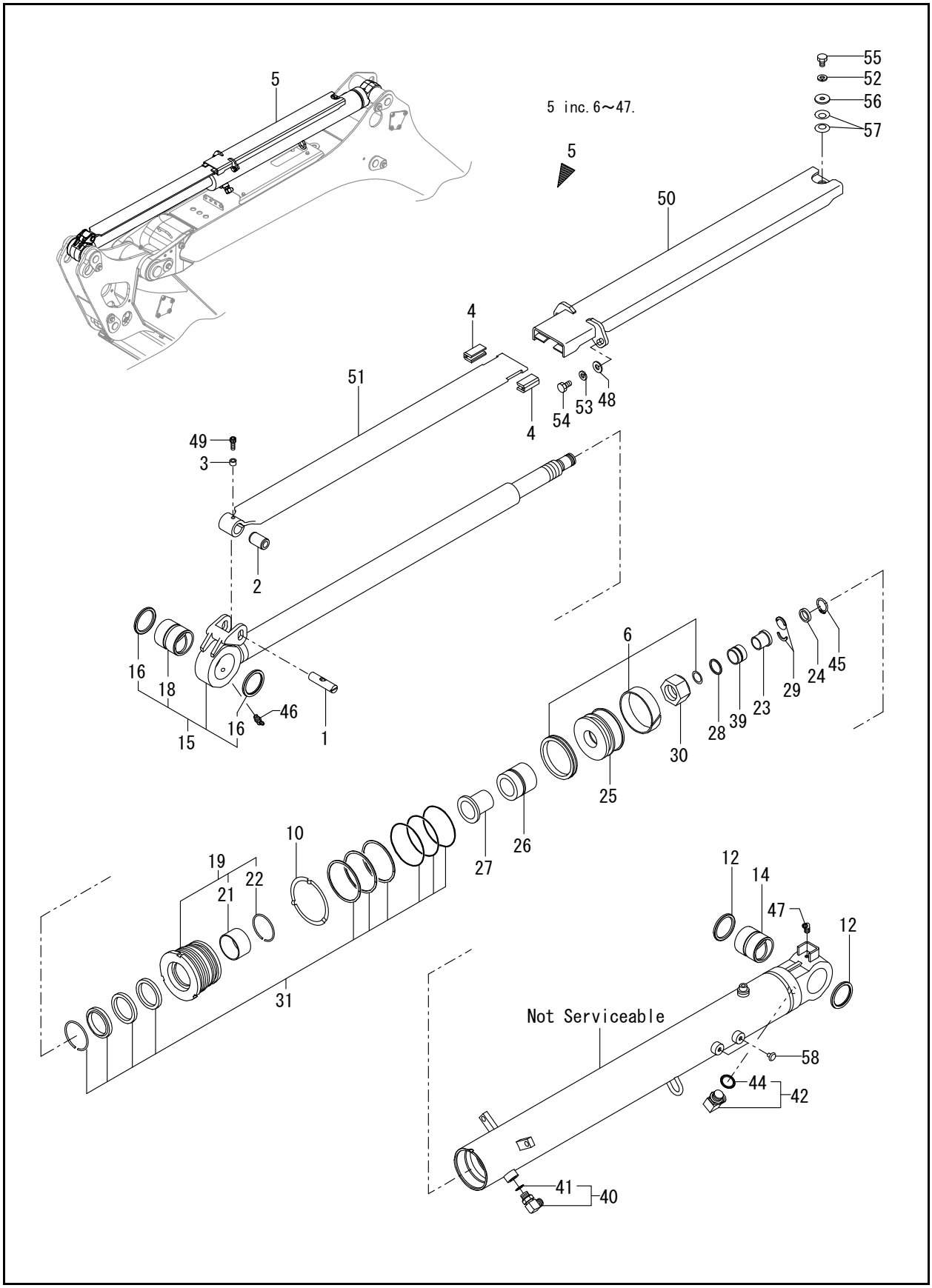
5
5 inc.6～47.
5
55
52
56
57
50
4
51
4
54
53
48
49
3
2
16
18
15
16
46
1
6
45
24
29
23
39
28
30
25
26
27
10
19
21
22
31
12
14
47
12
Not Serviceable
58
44
42
41
40

FIG. 79 - ARM CYLINDER

Ref. No.	Part No.	Description	Qty.
1	50283319	SHAFT,14X54	1
2	50283320	GROMMET	1
3	50283344	SPACER	1
4	50283321	SLIDE GUIDE	2
5	50283641	CYLINDER, ARM	1
6	50283206	SEAL SET	1
10	50282737	LOCK WASHER 85	1
12	50281061	SEAL 50X60X4,DUST	2
14	50280838	BUSHING 50X60	1
15	50283643	ROD ASSY, ARM	1
16	50281061	SEAL 50X60X4,DUST	2
18	50280838	BUSHING 50X60	1
19	50283644	HEAD ASSY 85 50	1
21	50282762	BUSHING 50 35, ROD	1
22	50284151	RING 60, SPRING	1
23	50283046	COLLAR 26 32,CUSHION	1
24	50283047	COVER,STOPPER	1
25	50283207	PISTON	1
26	50283208	PLUNGER	1
27	50283209	COLLAR 33 44,CUSHON	1
28	50281010	SPACER	1
29	50281011	STOPPER	2
30	50282763	U-NUT M36	1
31	50283658	HEAD SEAL SET,85X50	1
39	50283123	PLUNGER	1
40	50280823	JOINT 90-3/8 ASSY	1
41	50282471	O-RING 1B P-14.0	1
42	50280814	CONNECTOR 1/2L	1
44	50282474	O-RING 1B P-18.0	1
45	50284044	CIRCLIP 26	1
46	50282498	NIPPLE B,GREASE	1
47	50282499	NIPPLE C,GREASE	1
48	50283985	COLLOR	2
49	50283655	BOLT M16X16	1
50	50283324	GUIDE ASSY	1
51	50283325	SLIDE PLATE	1
52	50282393	SPRING WASHER 10	1
53	50282393	SPRING WASHER 10	2
54	50284106	BOLT M10 X 25	2
55	50284117	BOLT M10 X 16 PLATED	1
56	50282617	WASHER, BRAKE ARM	1
57	50282620	SPRING 16	2
58	50280782	CLIP	2

Z45 - COMPACT EXCAVATOR

FIG. 80 - BUCKET CYLINDER

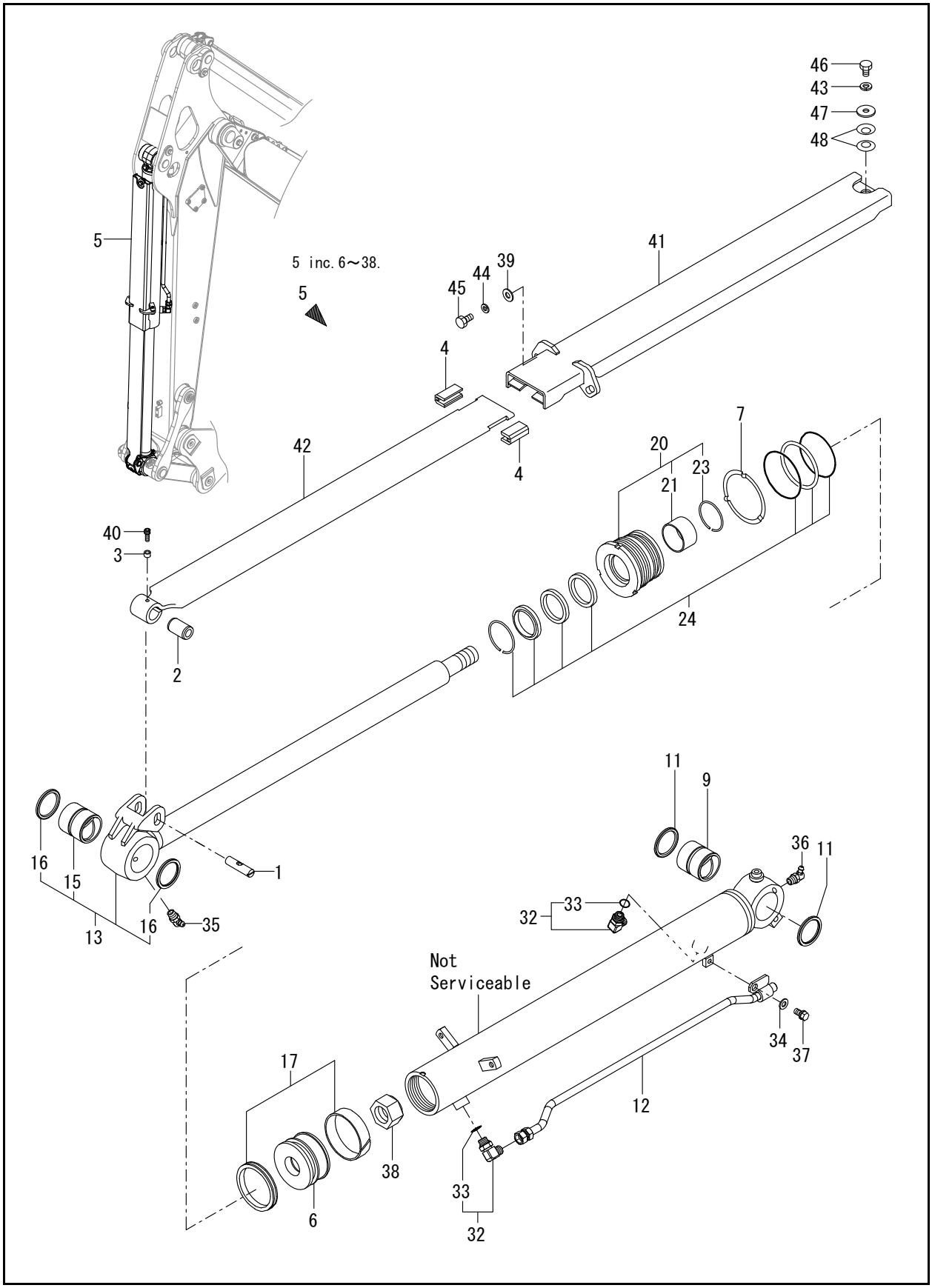

Ref. No.	Part No.	Description	Qty.
1	50283319	SHAFT,14X54	1
2	50283320	GROMMET	1
3	50283344	SPACER	1
4	50283321	SLIDE GUIDE	2
5	50283645	CYLINDER ASSY,BUCKET	1
6	50282754	PISTON 75	1
7	50282729	WASHER 75	1
9	50282804	BUSHING 45X40	1
11	50282817	SEAL 45X55X4, DUST	2
12	50283647	PIPE ASSY,BUCKET	1
13	50283648	ROD ASSY, BUCKET	1
15	50282764	BUSHING 45 50	1
16	50282817	SEAL 45X55X4, DUST	2
17	50283284	SEAL SET, PISTON	1
20	50283649	HEAD ASSY 75 50	1
21	50282762	BUSHING 50 35, ROD	1
23	50284151	RING 60, SPRING	1
24	50283659	HEAD SEAL SET,75X50	1
32	50280823	JOINT 90-3/8 ASSY	2
33	50282471	O-RING 1B P-14.0	2
34	138111	WASHER/POLISHED	1
35	50282498	NIPPLE B,GREASE	1
36	50282499	NIPPLE C,GREASE	1
37	50282515	BOLT W/WASHER M10X20	1
38	50284149	U-NUT M33	1
39	50283985	COLLOR	2
40	50283655	BOLT M16X16	1
41	50283656	GUIDE ASSY	1
42	50283657	PLATE, SLIDE	1
43	50282393	SPRING WASHER 10	1
44	50282393	SPRING WASHER 10	2
45	50284106	BOLT M10 X 25	2
46	50284117	BOLT M10 X 16 PLATED	1
47	50282617	WASHER, BRAKE ARM	1
48	50282620	SPRING 16	2

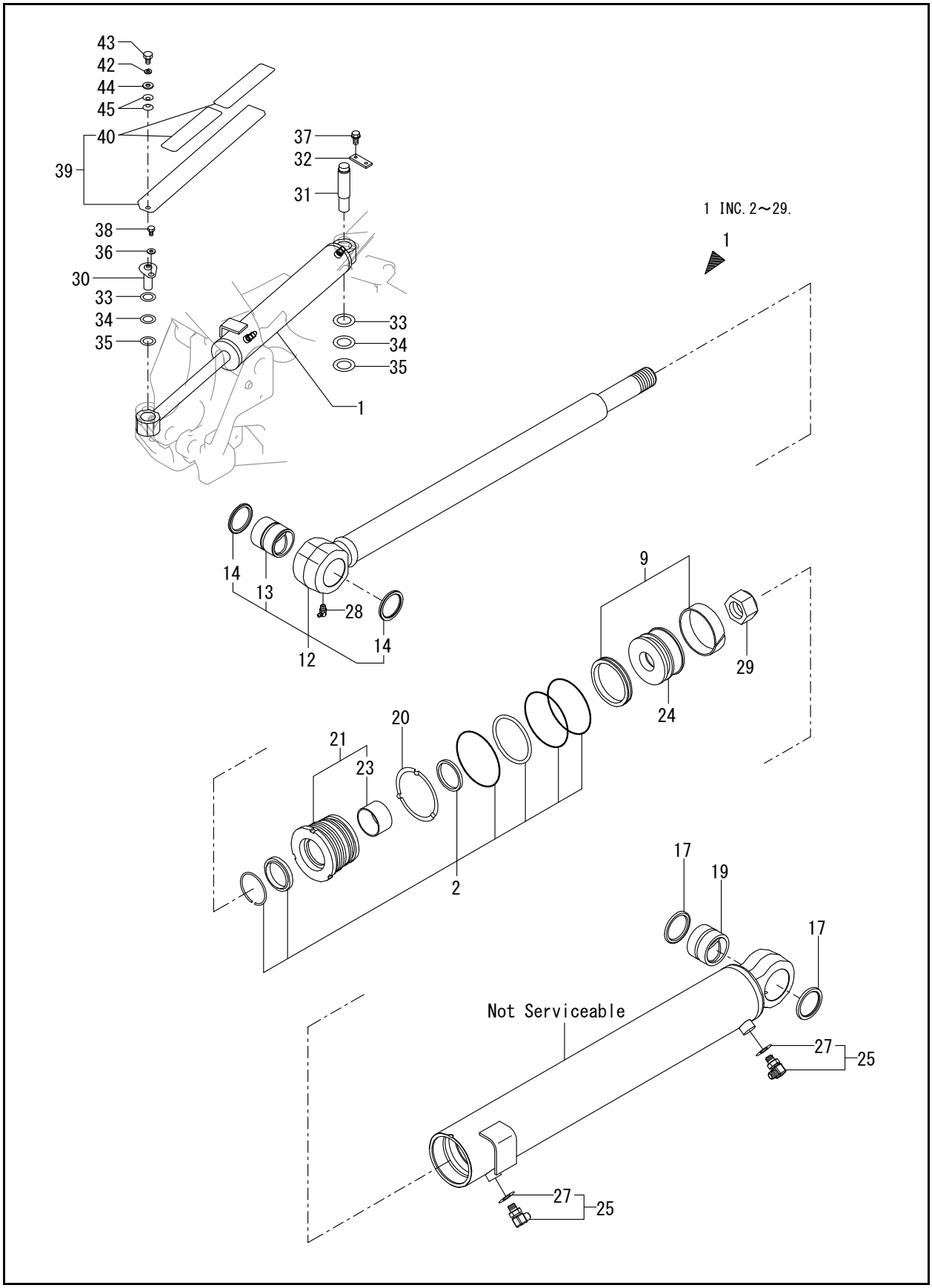
43
42
44
45
40
39
38
36
30
33
34
35
37
32
31
33
34
35
1
1 INC.2～29.
1
14
13
12
28
14
9
29
24
20
21
23
2
17
19
17
Not Serviceable
27
25
27
25

Ref. No.	Part No.	Description	Qty.
1	50283650	CYLINDER ASSY, SWING	1
2	50283117	SEAL SET	1
9	50283118	SEAL SET	1
12	50283120	ROD ASSY, SWING	1
13	50282803	BUSHING 40X40	1
14	50282912	SEAL 40X50X4,DUST	2
17	50282912	SEAL 40X50X4,DUST	2
19	50283048	BUSHING 40X40,SO	1
20	50282765	LOCK WASHER 90	1
21	50283121	HEAD	1
23	50284094	BUSHING	1
24	50283122	PISTON	1
25	50280813	CONNECTOR ASSY, 02FF	2
27	50282607	PACKING, 11.0	2
28	50282499	NIPPLE C,GREASE	1
29	50284149	U-NUT M33	1
30	50283071	PIN 40 X 117	1
31	50283902	PIN 40 X 111	1
32	50283905	PLATE	1
33	50282812	SHIM 40X75X0.5	4
34	50282813	SHIM 40X75X1.2	4
35	50282814	SHIM 40X75X1.6	4
36	50282388	WASHER 12	1
37	50282516	BOLT W/WASHER M10X25	2
38	50284101	BOLT M12 X 25	1
39	50283124	COVER, SWING	1
40	50282788	SHEET,NON SLIP50X200	2
42	50282393	SPRING WASHER 10	1
43	50284117	BOLT M10 X 16 PLATED	1
44	50282617	WASHER, BRAKE ARM	1
45	50282620	SPRING 16	2

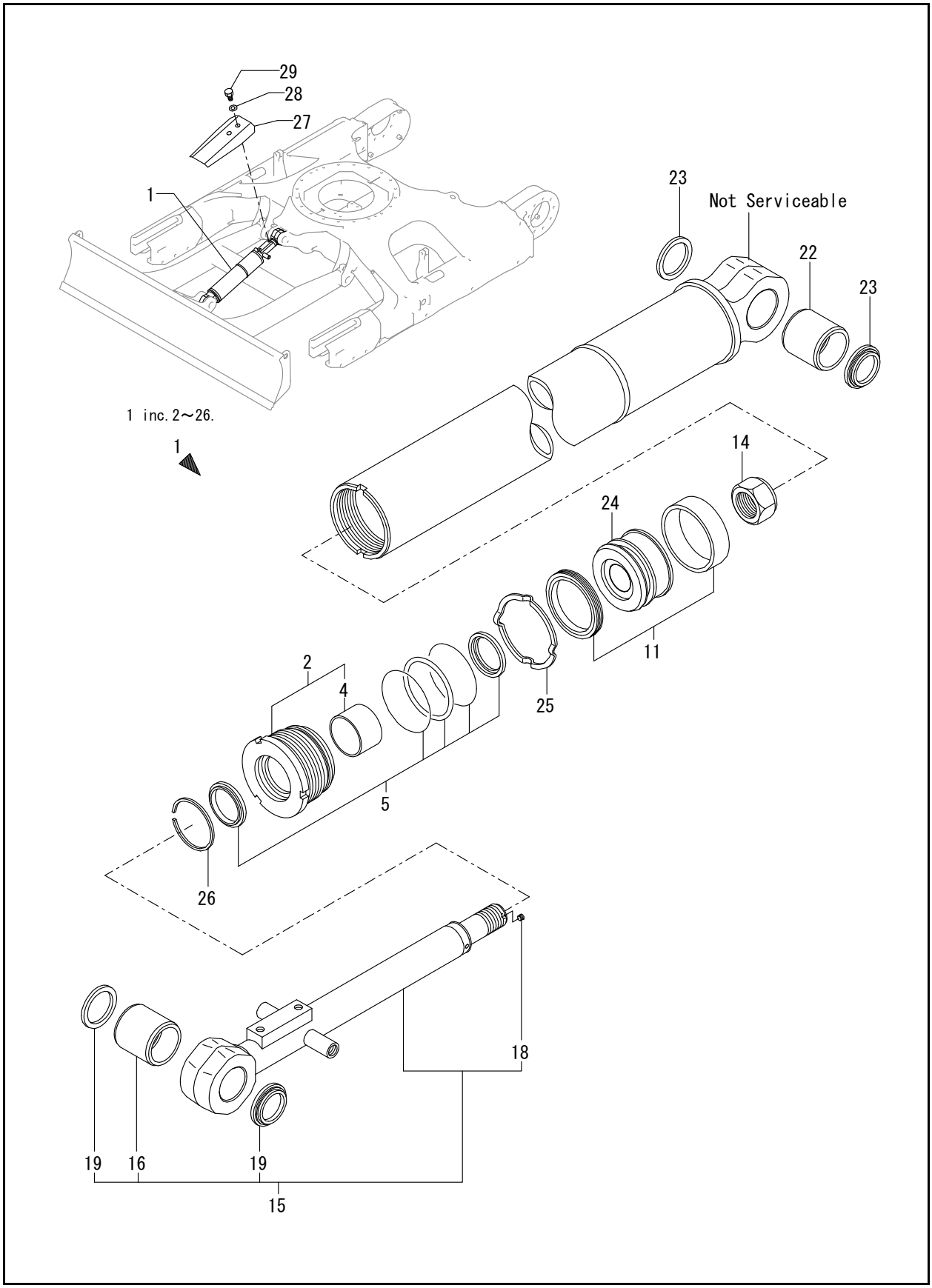
29
28
27
1
23
Not Serviceable
22
23
1 inc. 2～26.
1
14
24
11
2
4
25
5
26
18
19
16
19
15

FIG. 82 - BLADE CYLINDER

Ref. No.	Part No.	Description	Qty.
1	50283283	CYLINDER ASSY, BLADE	1
2	50282757	HEAD ASSY 90 50	1
4	50282762	BUSHING 50 35, ROD	1
5	50282758	HEAD SEAL SET 90 50	1
11	50283118	SEAL SET	1
14	50282763	U-NUT M36	1
15	50282860	ROD ASSY, BLADE	1
16	50282764	BUSHING 45 50	1
18	50282447	PLUG PT1/8,SCREW	1
19	50282817	SEAL 45X55X4, DUST	2
22	50282764	BUSHING 45 50	1
23	50282817	SEAL 45X55X4, DUST	2
24	50282861	PISTON 90	1
25	50282765	LOCK WASHER 90	1
26	50284150	RING 65, SPRING	1
27	50282903	COVER, BLADE	1
28	50284041	WASHER 12,POLISHED	2
29	50284100	BOLT W/WASHER M12 X 20	2

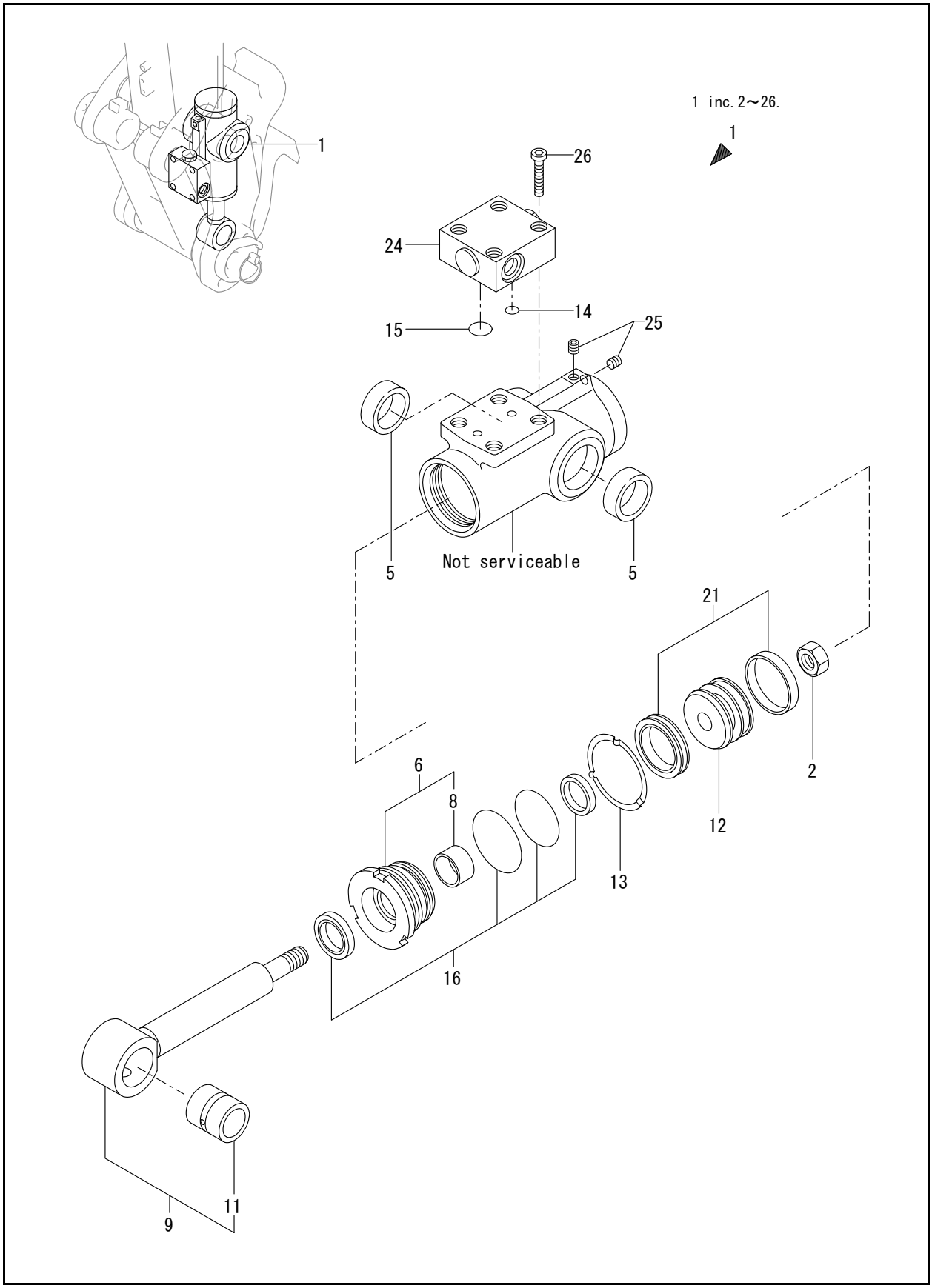
1 inc.2～26.
1
1
26
24
14
15
25
5
Not serviceable
5
21
2
6
8
12
13
16
11
9

FIG. 83 - HITCH CYLINDER (QUICK COUPLER)

Ref. No.	Part No.	Description	Qty.
1	50283286	CYLINDER, HITCH	1
2	50282730	NUT M20	1
5	50283293	BUSHING	2
6	50283288	HEAD	1
8	50284093	BUSHING 35X20	1
9	50283289	ROD ASSY, HITCH	1
11	50283292	BUSHING	1
12	50283290	PISTON	1
13	50283291	WASHER	1
14	50281374	O-RING P8	1
15	50281375	O-RING P14	1
16	50283294	SEAL SET,HEAD	1
21	50283295	SEAL SET, PISTON	1
24	50283277	VALVE ASSY,OPERATE	1
25	50282446	PLUG, PT1/16	2
26	50282582	BOLT M 6X 30	4

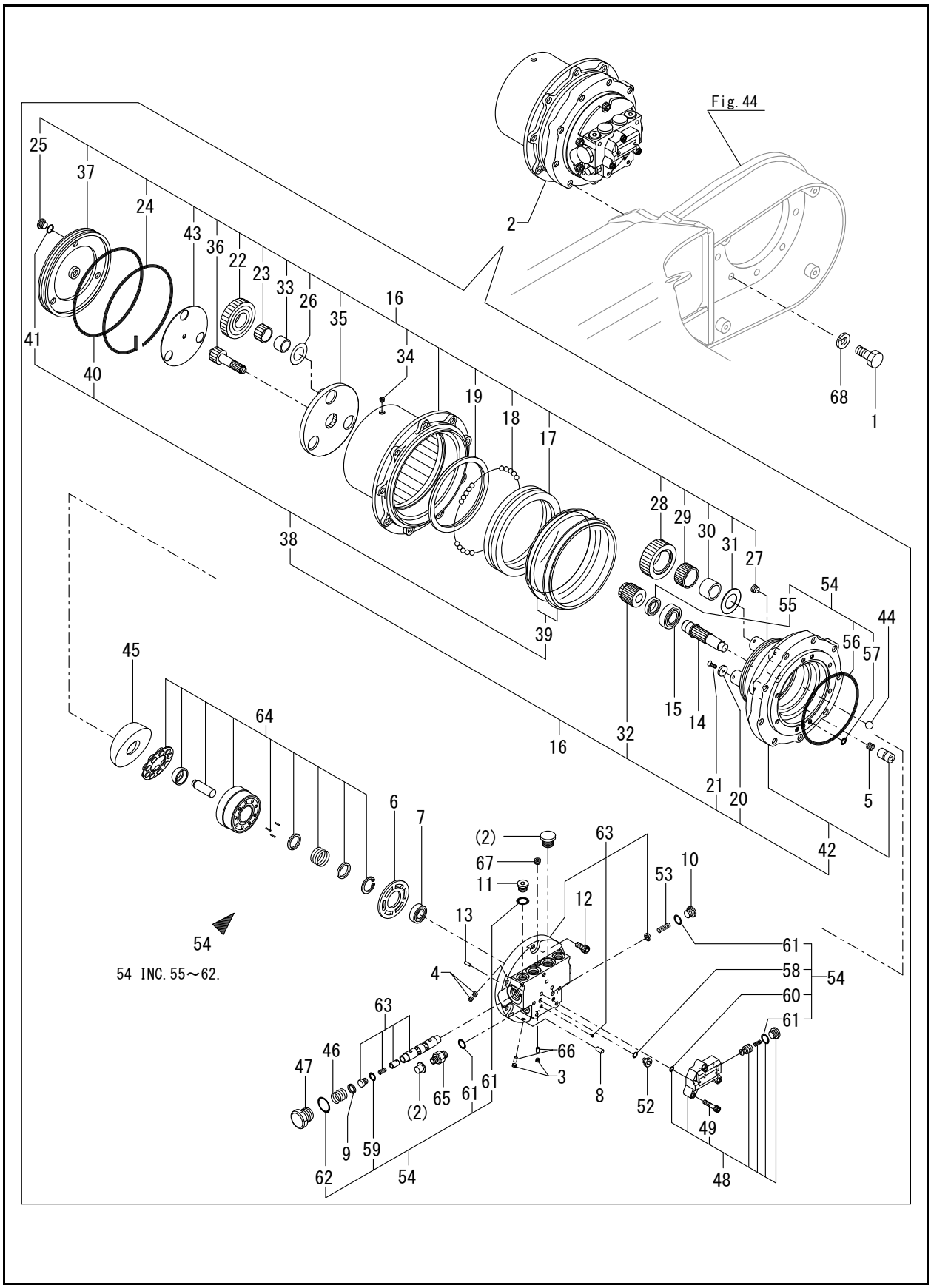
Fig.44
54 INC.55～62.

Ref. No.	Part No.	Description	Qty.
1	50281066	BOLT 14X35	18
2	50283141	MOTOR ASSY, TRAVEL	2
3	50282747	PLUG	4
4	50282753	ORIFICE	8
5	50282748	SPRING	4
6	50282749	PLATE, VALVE	2
7	50282750	BALL BEARING	2
8	50280786	PIN	4
9	50282705	SPRING SEAT	4
10	50280828	PLUG	2
11	50280828	PLUG	4
12	50282751	HEAD BOLT, SOCKET	12
13	50282707	PIN	2
14	50282868	SHAFT	2
15	50282869	BEARING	2
16	50283153	REDUCTION GEAR	2
17	50282714	BEARING	2
18	50280795	BALL	198
19	50282715	RING NUT	2
20	50282743	PLATE	2
21	50282728	SCREW	8
22	50282744	PLANETARY, GEAR A	6
23	50282745	GAUGE W/ROLLER	6
24	50282746	WIRE	2
25	50280836	PLUG	6
26	50283660	PLATE,THRUST	6
27	50282862	PLUG	4
28	50282863	GEAR	8
29	50282864	BEARING	8
30	50282865	LATHE	8
31	50281012	WASHER	8
32	50282866	SUN GEAR	2
33	50282867	LATHE	6
34	50282706	PLUG	4
35	50283154	HOLDER	2
36	50283155	GEAR, DRIVE	2
37	50283156	COVER	2
38	50283162	SEAL KIT	2
39	50282742	SEAL	4
40	50286465	O-RING	2
41	50282470	O-RING 1B P-11.0	6
42	50283164	FRAME ASSY	2
43	50283165	PLATE KIT,THRUST	2
44	50282870	BALL BEARING	4
45	50283157	PLATE,SWASH	2
46	50283158	SPRING	4
47	50283159	CAP	4
48	50283160	VALVE	2
49	50283661	HEAD BOLT	6
52	50283161	PLUG	4
53	50282871	SPRING	2
54	50283163	SEAL KIT	2
55	50286463	OIL SEAL	2
56	50286464	O-RING	2
57	50282467	O-RING 1B P-7.0	6
58	50282468	O-RING 1B P-8.0	4
59	50282469	O-RING 1B P-10.0	4
60	50284851	O-RING 1B P-12.0	6
61	50282471	O-RING 1B P-14.0	12
62	50282480	O-RING 1B P-29.0	4
63	50283166	PLATE KIT, BASE	2
64	50282872	CYLINDER BLOCK KIT	2
65	50283049	PLUG	2
66	50282849	ORIFICE	8
67	425-35678	PLUG PT 1/4 SCREW	2
68	188712	SPRING/WASHER 14	18

Z45 - COMPACT EXCAVATOR

FIG. 85 - TURNING MOTOR

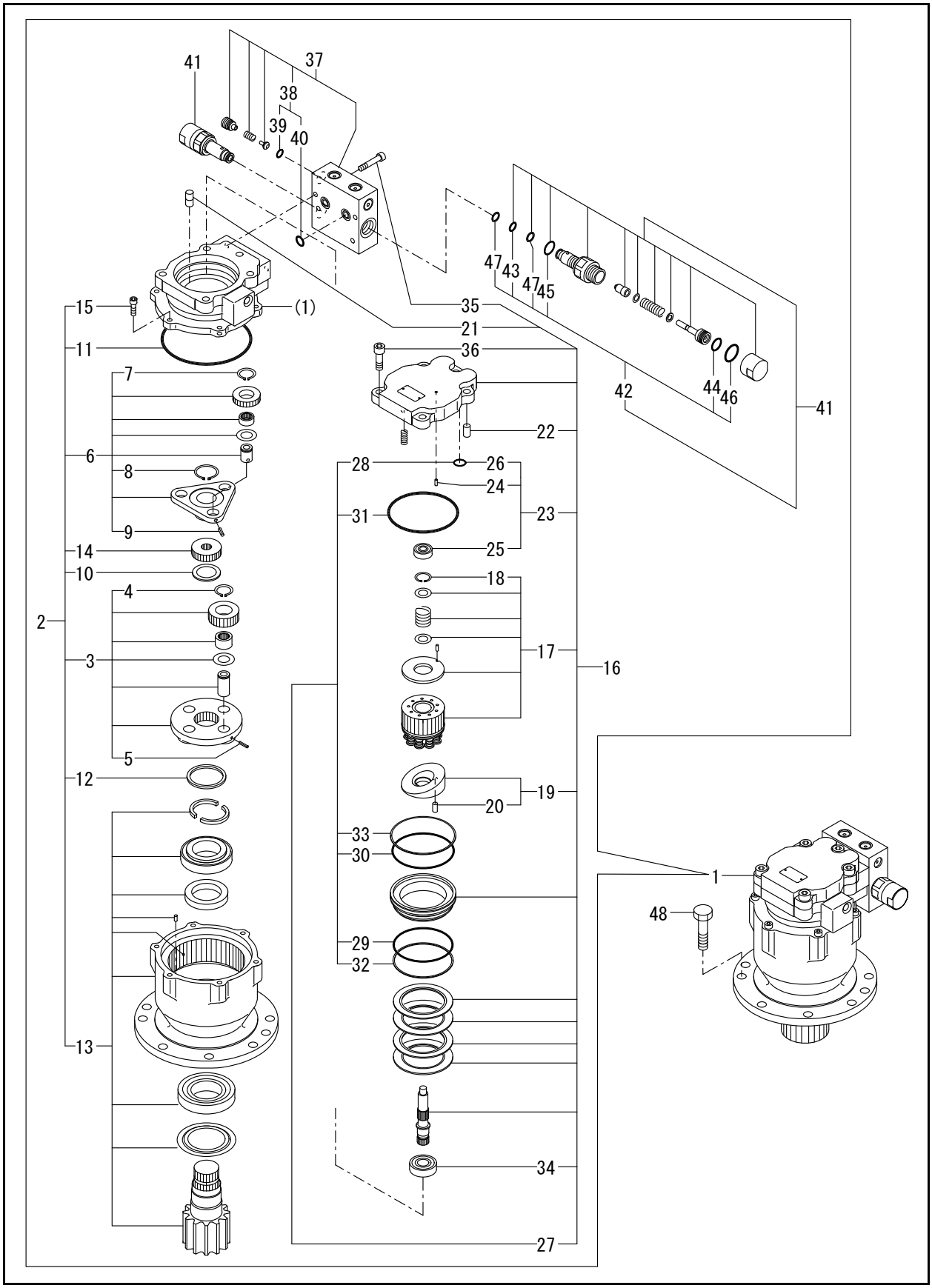

Ref. No.	Part No.	Description	Qty.
1	50283215	MOTOR COMP.,SWING	1
2	50283167	REDUCTION GEAR	1
3	50282874	CARRIER 1 KIT	1
4	425-35232	CIRCLIP 20	4
5	50284055	SPRING PIN 4X20	4
6	50282875	CARRIER 2 KIT	1
7	425-35232	CIRCLIP 20	3
8	50284045	CIRCLIP 30	1
9	50284055	SPRING PIN 4X20	3
10	50282878	COLLER	1
11	50282879	O-RING	1
12	50282880	RING	1
13	50283168	PINION	1
14	50283175	GEAR	1
15	50284134	BOLT M8 X 25	6
16	50283169	HYD.MOTOR	1
17	50282876	BARREL KIT	1
18	50284047	CIRCLIP 28	1
19	50282877	PLATE KIT	1
20	50282881	PIN	1
21	50286466	FILTER	2
22	50286467	PIN	1
23	50283170	BODY H KIT	1
24	50284056	PIN 5X12,SPRING	1
25	50284070	BALL BEARING	1
26	50282474	O-RING 1B P-18.0	2
27	50283171	SEAL KIT	1
28	50282474	O-RING 1B P-18.0	2
29	50284084	O-RING, 1B G100.0	1
30	50284085	O-RING, 1B G110	1
31	50284086	O-RING BG120.0	1
32	50284090	BACKUP RING T3 G100	1
33	50284091	BACKUP RING T3 G110	1
34	50284072	BALL BEARING	1

Ref. No.	Part No.	Description	Qty.
35	50282587	BOLT 8X50	4
36	50284136	BOLT, M12 X 35	5
37	50283172	VALVE	1
38	50283173	SEAL KIT	1
39	50282470	O-RING 1B P-11.0	2
40	50282474	O-RING 1B P-18.0	2
41	50283216	VALVE ASSY	2
42	50283174	SEAL KIT	2
43	50282471	O-RING 1B P-14.0	2
44	50282474	O-RING 1B P-18.0	2
45	50284079	O-RING 1B P-22.0	2
46	50284080	O-RING 1B P-28.0	2
47	50284088	RING	4
48	50281146	BOLT	9

FIG. 86 - SWIVEL JOINT

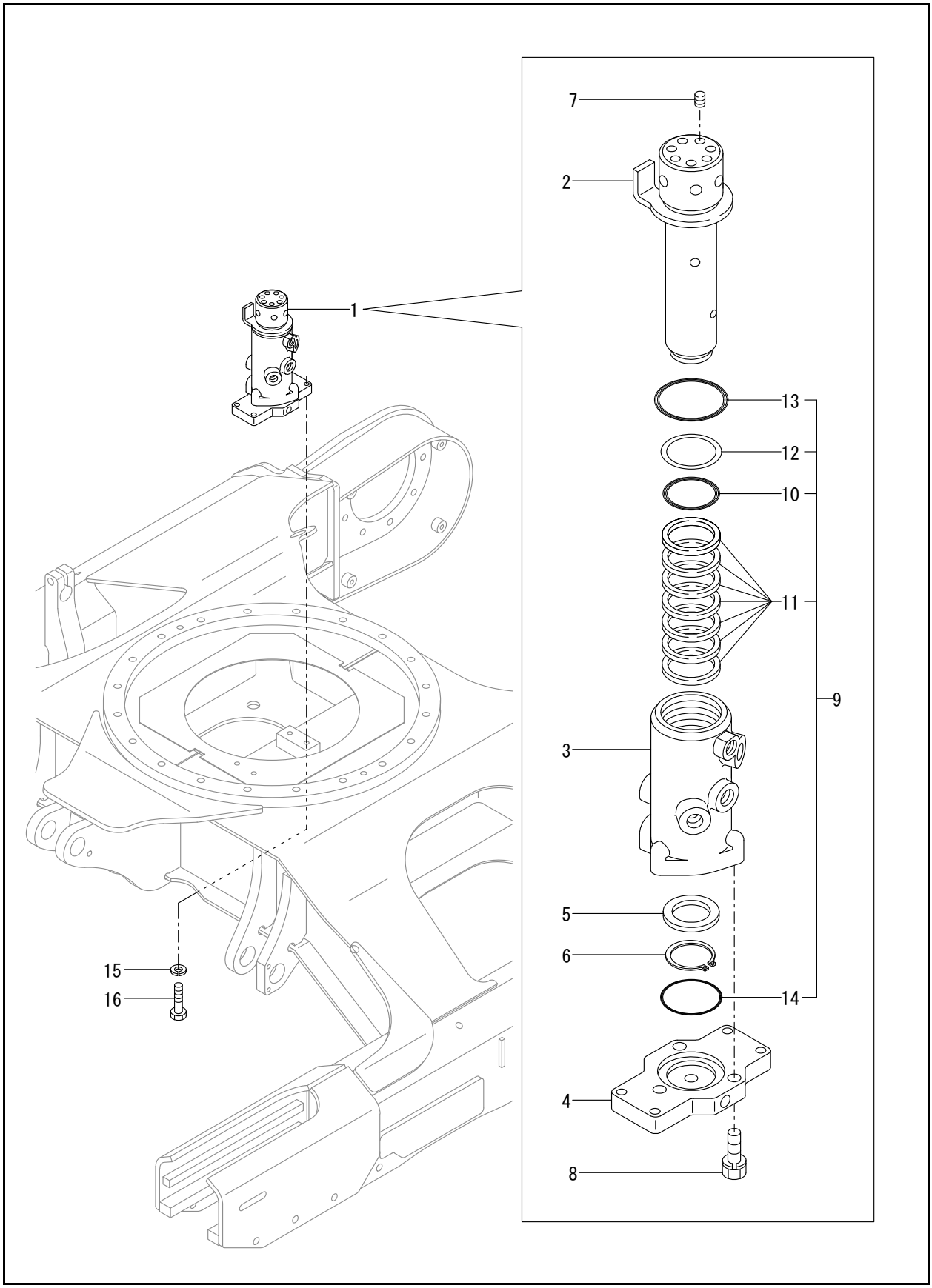

Ref. No.	Part No.	Description	Qty.
1	50282890	JOINT ASSY, SWIVEL	1
2	50282891	SHAFT, SWIVEL	1
3	50282892	HUB, SWIVEL	1
4	50282893	FLANGE, SWIVEL	1
5	50282722	SPACER, SWIVEL	1
6	50284046	CIRCLIP 45	1
7	425-35678	PLUG PT 1/4 SCREW	7
8	50282518	BOLT M10X 35	3
9	50282894	SEAL KIT,SWIVEL	1
10	50282735	O-RING 55.76X5.7	1
11	50282908	SEAL	7
12	50282755	RING EL, BACK UP	1
13	50284077	O-RING 1A P-75.0	1
14	186610	O-RING 1A G70.0 NBR	1
15	50282393	SPRING WASHER 10	4
16	50284119	BOLT M10 X 35	4

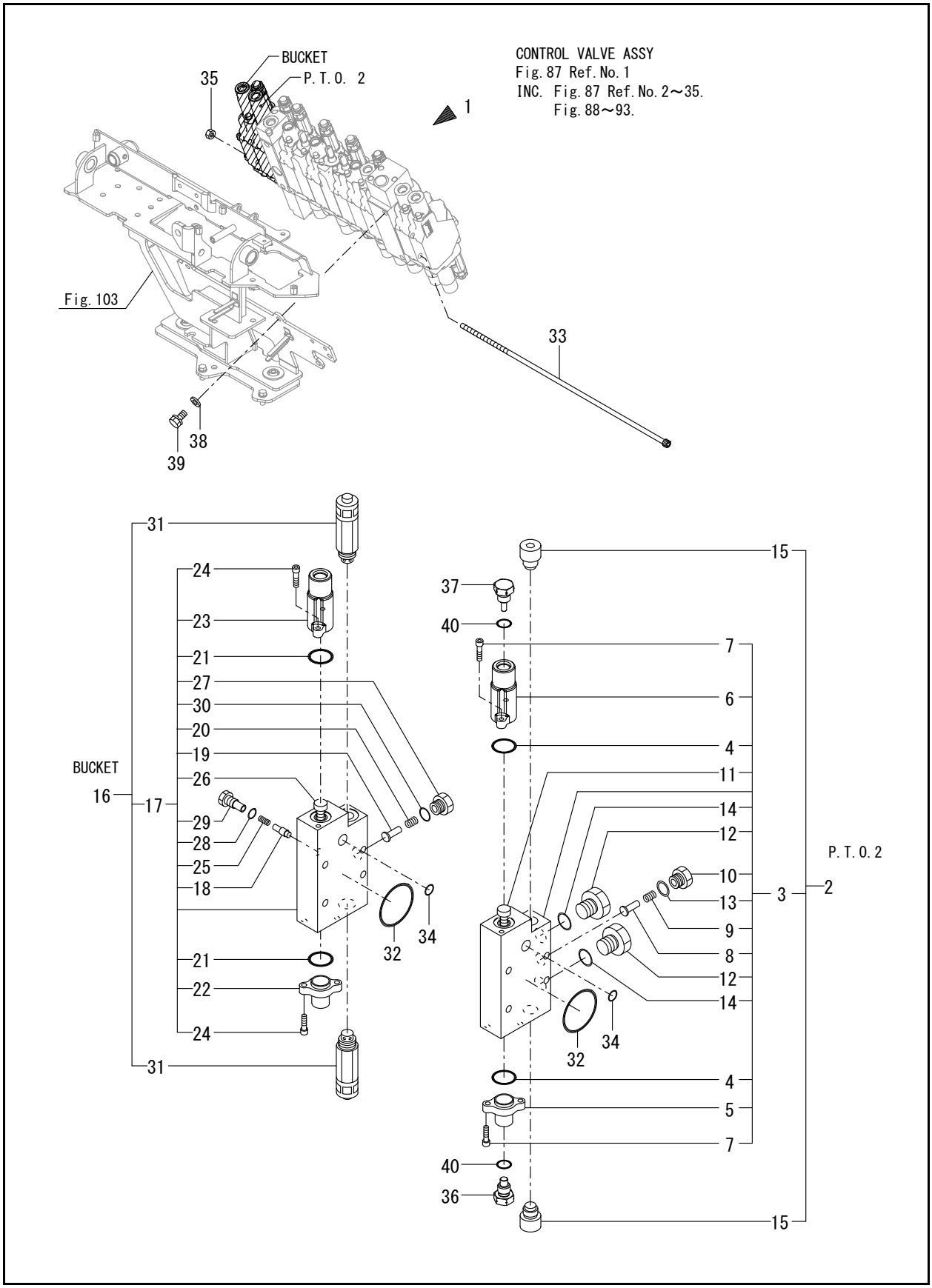
BUCKET
P.T.O. 2
35
1
CONTROL VALVE ASSY
Fig. 87 Ref. No. 1
INC. Fig. 87 Ref. No. 2～35.
Fig. 88～93.
Fig. 103
33
38
39
31
24
23
21
27
30
20
19
26
BUCKET
16
17
29
28
25
18
32
34
21
22
24
31
15
37
40
7
6
4
11
14
12
10
13
9
8
12
14
3
2
P.T.O. 2
32
34
4
5
7
40
36
15

FIG. 87 - CONTROL VALVE (1/7)

Ref. No.	Part No.	Description	Qty.
1	50283665	VALVE ASSY, CONTROL	1
2	50286550	PTO 2 SECTION ASSY	1
3	50286540	PTO 2 SECTION ASSY	1
4	50283055	PACKING S 22	2
5	50283056	COVER B1, PILOT	1
6	50283057	COVER A1, PILOT	1
7	50283058	SWP HEX.BOLT 5X20	4
8	50283254	CHECK VALVE	1
9	50283255	SPRING, CHECK VALVE	1
10	50283256	STAY, CHECK VALVE	1
11	50286527	PTO 2 SPOOL ASSY	1
12	50283750	STAY,CHECK V(SC3A	2
13	50282470	O-RING 1B P-11.0	1
14	50282471	O-RING 1B P-14.0	2
15	50283730	RELIEF VALVE PLUG AS	2
16	50286551	BUCKET SECTION ASSY	1
17	50286541	BUCKET SECTION ASSY	1
18	50283265	CHECK VALVE	1
19	50283052	CHECK VALVE	1
20	50283053	SPRING, CHECK VALVE	1
21	50283055	PACKING S 22	2
22	50283056	COVER B1, PILOT	1
23	50283057	COVER A1, PILOT	1
24	50283058	SWP HEX.BOLT 5X20	4
25	50282819	SPRING,CHECK	1
26	50286528	BUCKET SPOOL ASSY	1
27	50283065	STAY, CHECK VALVE	1
28	50283719	O-RING AS568-904	1
29	50283721	STAY, CHECK VALVE	1
30	50282470	O-RING 1B P-11.0	1
31	50283731	VALVE ASSY, OVERLOAD	2
32	50285391	PACKING G 4	12
33	50283729	BOLT L=412	4
34	50286594	O-RING	12
35	50282596	NUT M 8	4
36	50283780	PILOT PLUG A	1
37	50283781	PILOT PLUG B	1
38	50284039	WASHER 10	3
39	50282514	BOLT M10X 16	3
40	50282607	PACKING, 11.0	2

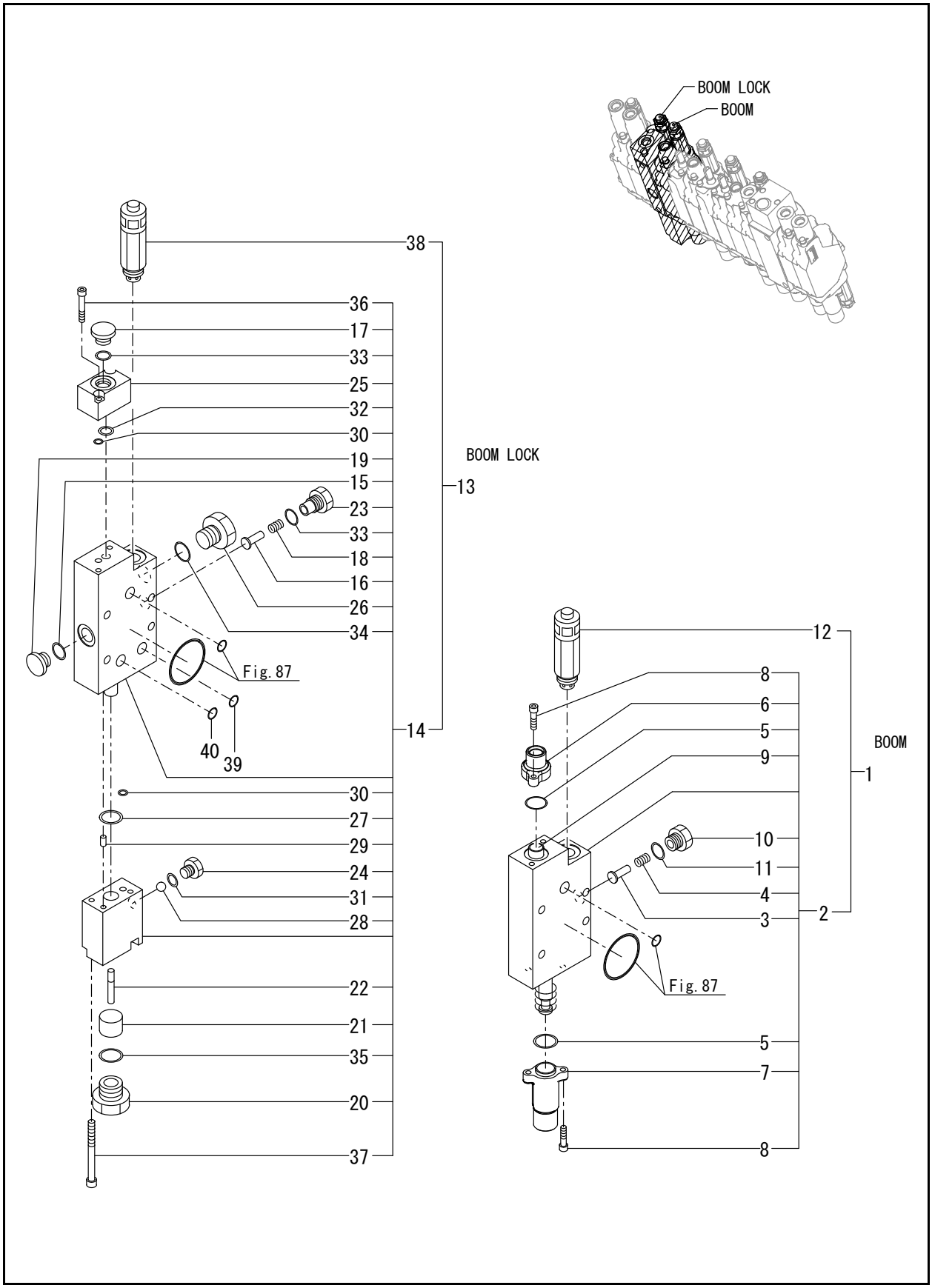
BOOM LOCK
BOOM
38
36
17
33
25
32
30
19
15
23
33
18
16
26
34
BOOM LOCK
13
Fig. 87
40
39
14
30
27
29
24
31
28
22
21
35
20
37
12
8
6
5
9
BOOM
1
10
11
4
3
2
Fig. 87
5
7
8

Ref. No.	Part No.	Description	Qty.
1	50286548	BOOM SECTION ASSY	1
2	50286538	BOOM SECTION ASSY	1
3	50283052	CHECK VALVE	1
4	50283053	SPRING, CHECK VALVE	1
5	50283055	PACKING S 22	2
6	50283056	COVER B1, PILOT	1
7	50283057	COVER A1, PILOT	1
8	50283058	SWP HEX.BOLT 5X20	4
9	50286526	BOOM SPOOL ASSY	1
10	50283065	STAY, CHECK VALVE	1
11	50282470	O-RING 1B P-11.0	1
12	50283731	VALVE ASSY, OVERLOAD	1
13	50286549	LOCK SECTION ASSY	1
14	50286539	LOCK SECTION ASSY	1
15	50283678	O-RING 1B S16	1
16	50283059	CHECK VALVE	1
17	50282840	PLUG PF1/4	1
18	50283060	SPRING, CHECK VALVE	1
19	50283697	PLUG,M12X1.25	1
20	50283707	BUSHING PF1/2X1/4	1
21	50283708	PISTON B	1
22	50283709	PISTON A1	1
23	50283066	STAY, CHECK VALVE	1
24	50283716	STAY,BALL	1
25	50283717	BODY,DISCHARGE	1
26	50283750	STAY,CHECK V(SC3A	1
27	50283756	O-RING AS 1B17	1
28	50283757	STEEL BALE 7MM	1
29	50284053	PARALLEL PIN, M5X10	2
30	197795	O-RING 1A P-6.0	2
31	50282468	O-RING 1B P-8.0	1
32	50282469	O-RING 1B P-10.0	1
33	50282470	O-RING 1B P-11.0	2
34	50282471	O-RING 1B P-14.0	1
35	50282474	O-RING 1B P-18.0	1
36	50284130	BOLT M5 X 30	2
37	50284133	BOLT M6 X 65	2
38	50283731	VALVE ASSY, OVERLOAD	1
39	50285892	O-RING 1B P- 9.0	1
40	50282469	O-RING 1B P-10.0	1

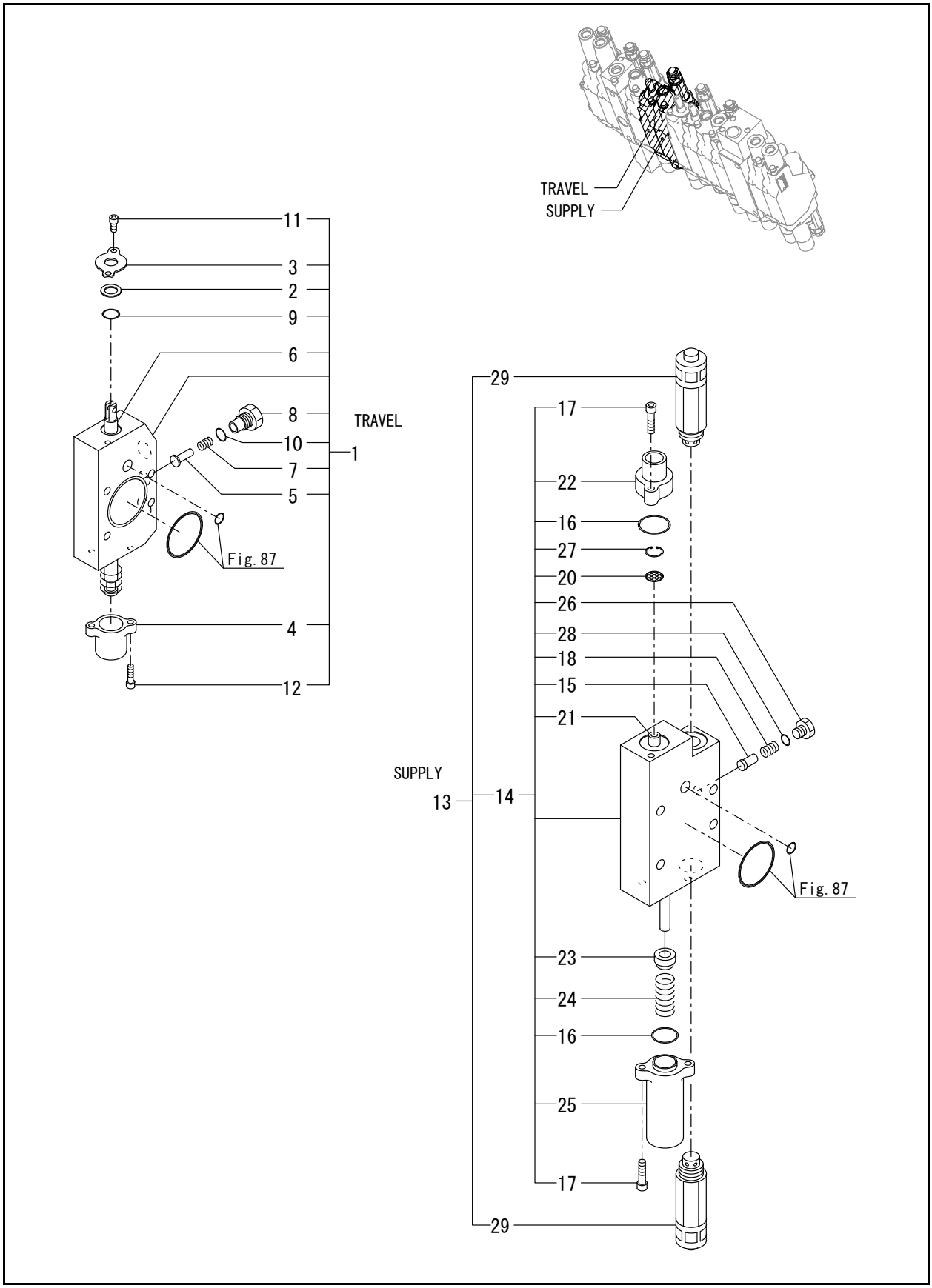
TRAVEL
SUPPLY
11
3
2
9
6
8
10
7
5
TRAVEL
1
Fig. 87
4
12
29
17
22
16
27
20
26
28
18
15
21
SUPPLY
13
14
Fig. 87
23
24
16
25
17
29

FIG. 89 - CONTROL VALVE (3/7)

Ref. No.	Part No.	Description	Qty.
1	50286537	TRAVEL SECTION ASSY	1
2	50283050	DUST WIPER	1
3	50283051	BRACKET, OIL SEAL	1
4	50283968	CAP,SPRING	1
5	50283059	CHECK VALVE	1
6	50286525	TRAVEL SPOOL ASSY	1
7	50283060	SPRING, CHECK VALVE	1
8	50283066	STAY, CHECK VALVE	1
9	425-34776	O-RING 1A P-12.0	1
10	50282470	O-RING 1B P-11.0	1
11	197813	BOLT M5X10	2
12	50284129	BOLT 5* 18	2
13	50286547	INLET SECTION ASSY	1
14	50286536	INLET SECTION ASSY	1
15	50283265	CHECK VALVE	1
16	50283055	PACKING S 22	2
17	50283058	SWP HEX.BOLT 5X20	4
18	50282819	SPRING,CHECK	1
20	50283688	FILTER	1
21	50283689	PISTON	1
22	50283690	COVER B5, PILOT	1
23	50283062	SEAT, SPRING	1
24	50283063	SPRING,RETURN	1
25	50283064	COVER A2, PILOT	1
26	50283068	PLUG,PF1/8	1
27	50283722	CIRCLIP,C	1
28	50282468	O-RING 1B P-8.0	1
29	50283724	VALVE ASSY, RELIEF	2

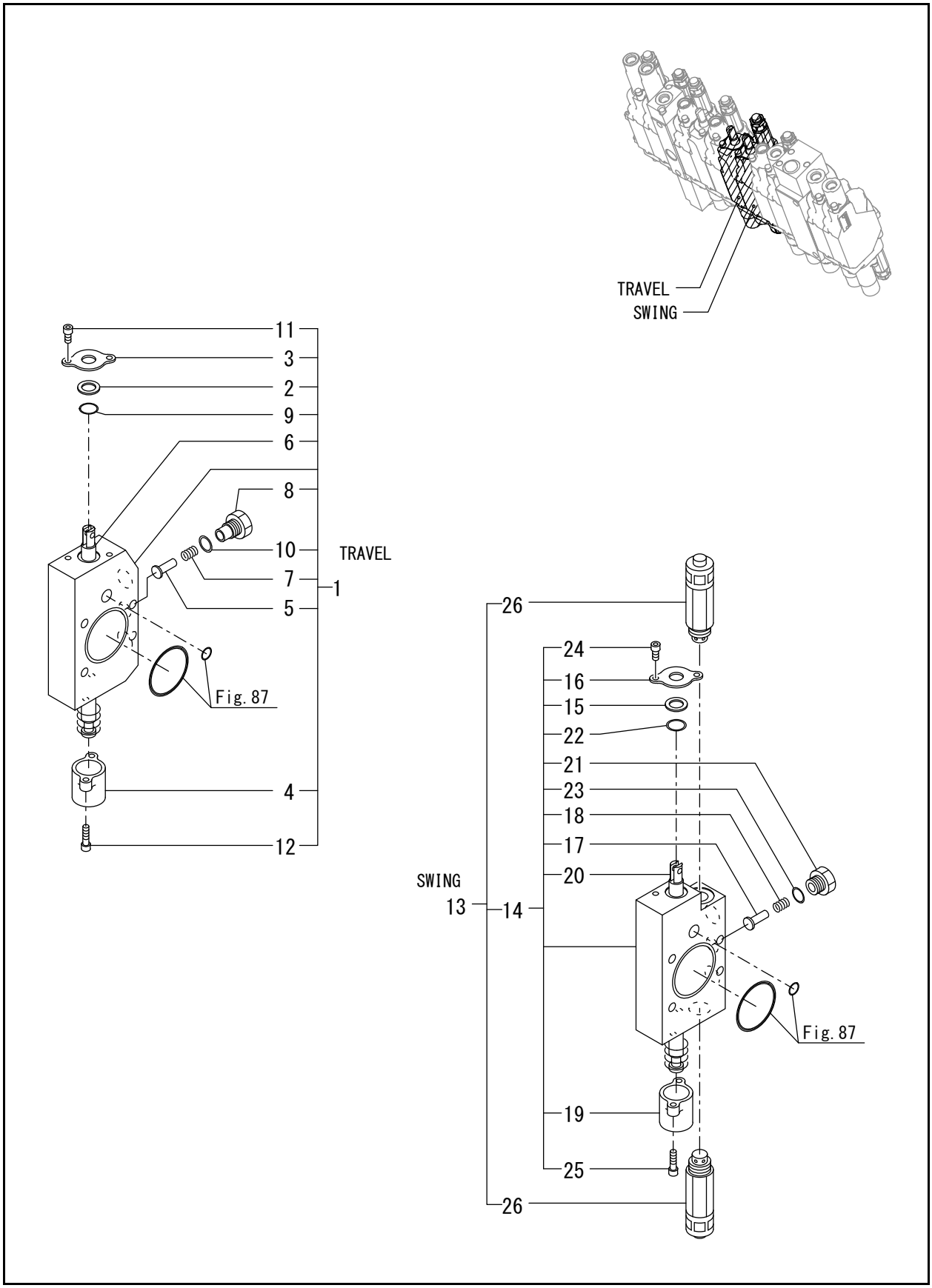
TRAVEL
SWING
11
3
2
9
6
8
10
7
5
TRAVEL
1
Fig. 87
4
12
26
24
16
15
22
21
23
18
17
20
SWING
13
14
Fig. 87
19
25
26

FIG. 90 - CONTROL VALVE (4/7)

Ref. No.	Part No.	Description	Qty.
1	50286535	TRAVEL SECTION ASSY	1
2	50283050	DUST WIPER	1
3	50283051	BRACKET, OIL SEAL	1
4	50283968	CAP,SPRING	1
5	50283059	CHECK VALVE	1
6	50286525	TRAVEL SPOOL ASSY	1
7	50283060	SPRING, CHECK VALVE	1
8	50283066	STAY, CHECK VALVE	1
9	425-34776	O-RING 1A P-12.0	1
10	50282470	O-RING 1B P-11.0	1
11	197813	BOLT M5X10	2
12	50284129	BOLT 5* 18	2
13	50286546	SWING SECTION ASSY	1
14	50286534	SWING SECTION ASSY	1
15	50283050	DUST WIPER	1
16	50283051	BRACKET, OIL SEAL	1
17	50283052	CHECK VALVE	1
18	50283053	SPRING, CHECK VALVE	1
19	50283968	CAP,SPRING	1
20	50286524	SWING SPOOL ASSY	1
21	50283065	STAY, CHECK VALVE	1
22	425-34776	O-RING 1A P-12.0	1
23	50282470	O-RING 1B P-11.0	1
24	197813	BOLT M5X10	2
25	50284129	BOLT 5* 18	2
26	50283731	VALVE ASSY, OVERLOAD	2

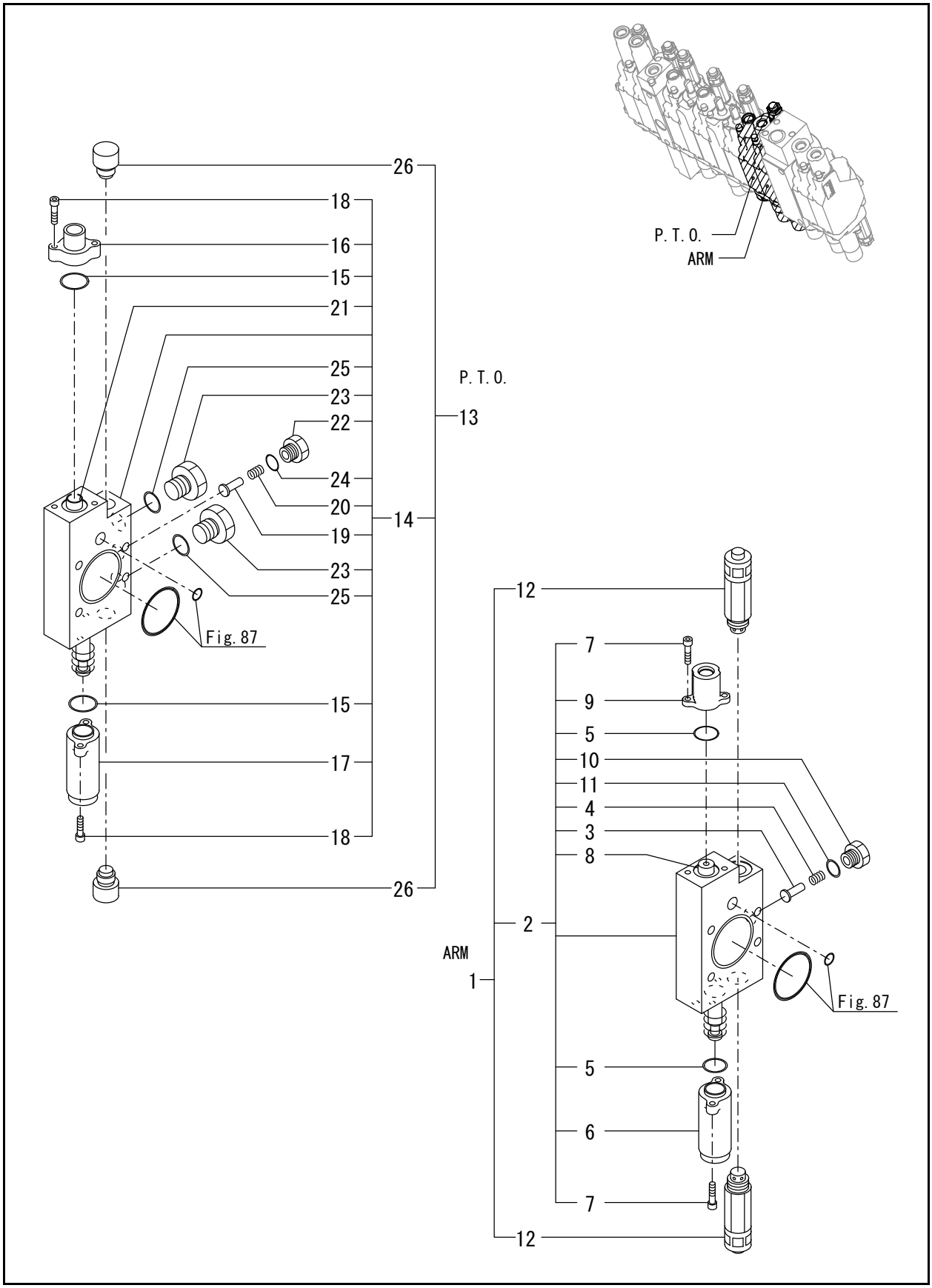
P. T. O.
ARM
26
18
16
15
21
25
23
22
24
20
19
23
25
P. T. O.
13
14
Fig. 87
15
17
18
26
12
7
9
5
10
11
4
3
8
2
ARM
1
Fig. 87
5
6
7
12

FIG. 91 - CONTROL VALVE (5/7)

Ref. No.	Part No.	Description	Qty.
1	50286544	ARM SECTION ASSY	1
2	50286532	ARM SECTION ASSY	1
3	50283052	CHECK VALVE	1
4	50283053	SPRING, CHECK VALVE	1
5	50283055	PACKING S 22	2
6	50283057	COVER A1, PILOT	1
7	50283058	SWP HEX.BOLT 5X20	4
8	50286522	ARM SPOOL ASSY	1
9	50286552	PILOT CAP	1
10	50283065	STAY, CHECK VALVE	1
11	50282470	O-RING 1B P-11.0	1
12	50283731	VALVE ASSY, OVERLOAD	2
13	50286545	PTO 1 SECTION ASSY	1
14	50286533	PTO 1 SECTION ASSY	1
15	50283055	PACKING S 22	2
16	50283056	COVER B1, PILOT	1
17	50283057	COVER A1, PILOT	1
18	50283058	SWP HEX.BOLT 5X20	4
19	50283254	CHECK VALVE	1
20	50283255	SPRING, CHECK VALVE	1
21	50286523	PTO 1 SPOOL ASSY	1
22	50283256	STAY, CHECK VALVE	1
23	50283750	STAY,CHECK V(SC3A	2
24	50282470	O-RING 1B P-11.0	1
25	50282471	O-RING 1B P-14.0	2
26	50283730	RELIEF VALVE PLUG AS	2

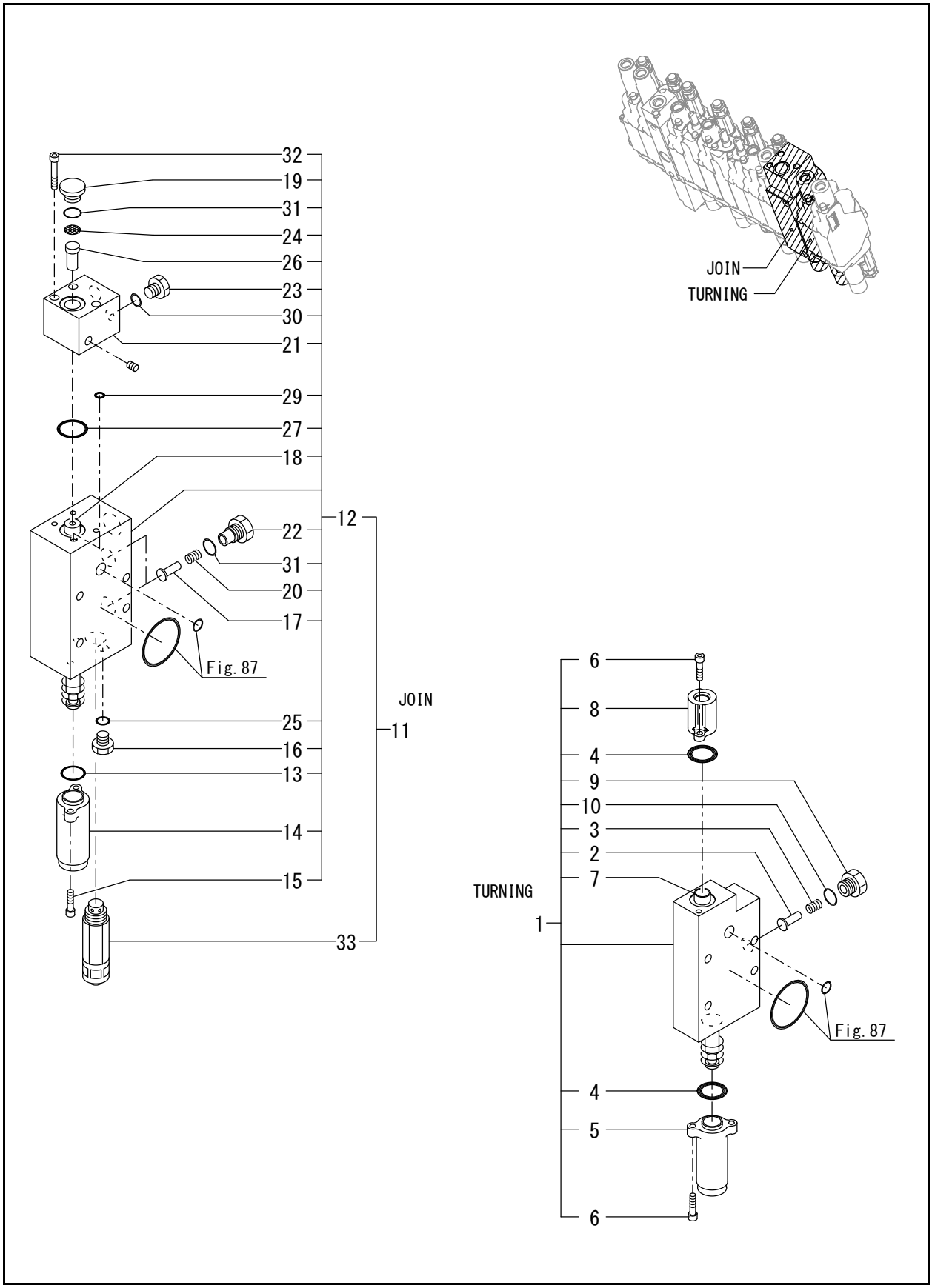
JOIN
TURNING
32
19
31
24
26
23
30
21
29
27
18
12
22
31
20
17
Fig. 87
JOIN
25
11
16
13
14
15
33
6
8
4
9
10
3
2
7
TURNING
1
Fig. 87
4
5
6

FIG. 92 - CONTROL VALVE (6/7)

Ref. No.	Part No.	Description	Qty.
1	50286530	SWING SECTION ASSY	1
2	50283052	CHECK VALVE	1
3	50283053	SPRING, CHECK VALVE	1
4	50283055	PACKING S 22	2
5	50283057	COVER A1, PILOT	1
6	50283058	SWP HEX.BOLT 5X20	4
7	50286521	TURNING SPOOL ASSY	1
8	50286552	PILOT CAP	1
9	50283065	STAY, CHECK VALVE	1
10	50282470	O-RING 1B P-11.0	1
11	50286543	SECTION ASSY	1
12	50286531	SECTION ASSY	1
13	50283055	PACKING S 22	1
14	50283057	COVER A1, PILOT	1
15	50283058	SWP HEX.BOLT 5X20	2
16	50283677	PLUG (SAE1/4)	1
17	50283059	CHECK VALVE	2
18	50283681	SPOOL ASSY,JOIN	1
19	50282840	PLUG PF1/4	1
20	50283060	SPRING, CHECK VALVE	2
21	50286553	PILOT BLOCK	1
22	50283066	STAY, CHECK VALVE	2
23	50283068	PLUG,PF1/8	1
24	50283266	FILTER	1
25	50283719	O-RING AS568-904	1
26	50283267	PLUG	1
27	50283756	O-RING AS 1B17	1
29	50286604	O-RING	1
30	50282468	O-RING 1B P-8.0	1
31	50282470	O-RING 1B P-11.0	3
32	50284131	BOLT M5 X 45	3
33	50283724	VALVE ASSY, RELIEF	1

FIG. 93 - CONTROL VALVE (7/7)

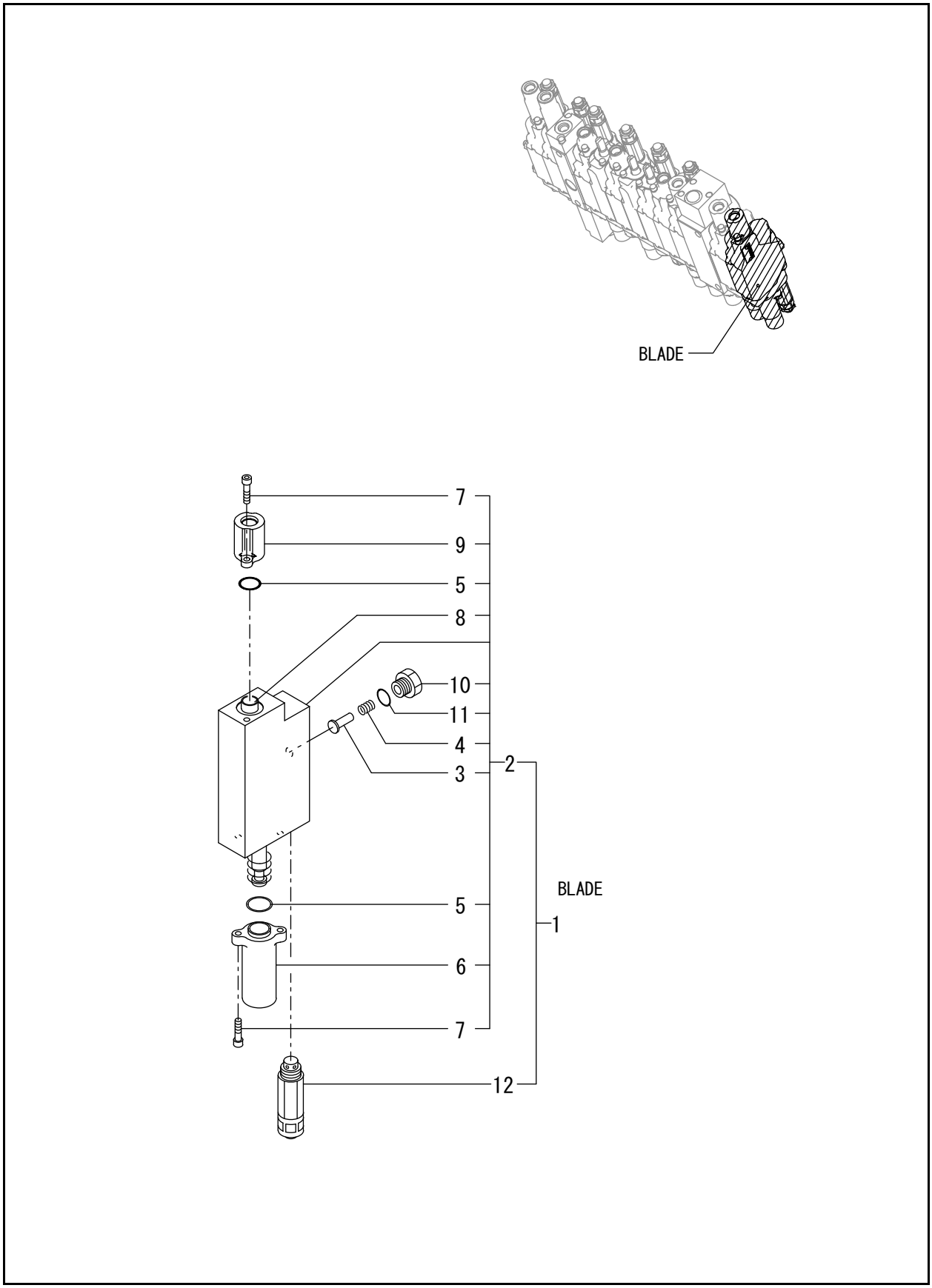

FIG. 93 - CONTROL VALVE (7/7)

Ref. No.	Part No.	Description	Qty.
1	50286542	BLADE SECTION ASSY	1
2	50286529	BLADE SECTION ASSY	1
3	50283052	CHECK VALVE	1
4	50283053	SPRING, CHECK VALVE	1
5	50283055	PACKING S 22	2
6	50283057	COVER A1, PILOT	1
7	50283058	SWP HEX.BOLT 5X20	4
8	50286520	BLADE SPOOL ASSY	1
9	50286552	PILOT CAP	1
10	50283065	STAY, CHECK VALVE	1
11	50282470	O-RING 1B P-11.0	1
12	50283732	VALVE/RELIEF	1

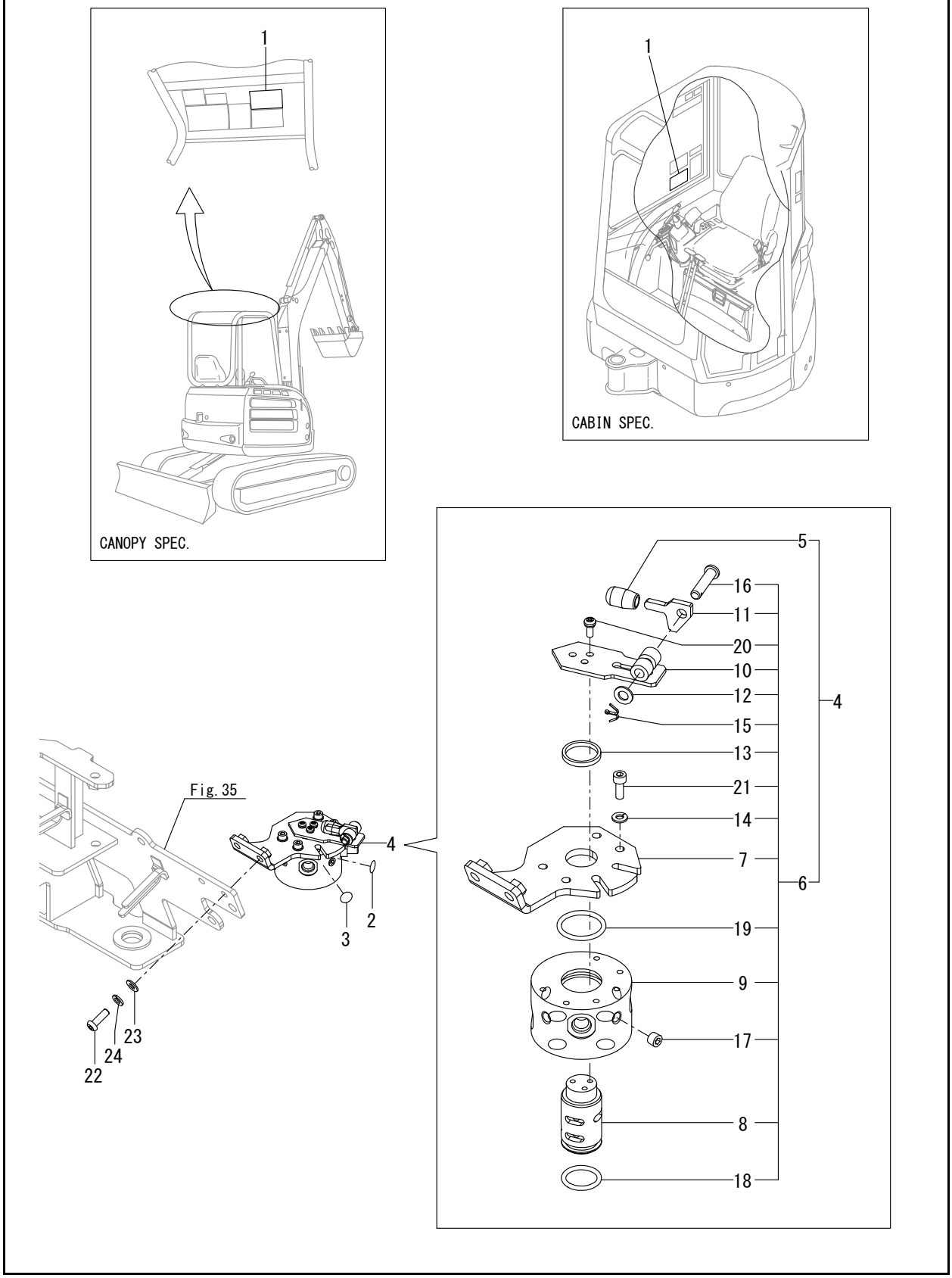
1
CANOPY SPEC.
1
CABIN SPEC.
Fig. 35
4
2
3
22
24
23
5
16
11
20
10
12
15
13
21
14
7
19
9
17
8
18
4
6

FIG. 94 - 2-WAY VALVE

Ref. No.	Part No.	Description	Qty.
1	50281037	LABEL, 2-WAY US	1
2	50281038	LABEL	1
3	50281039	LABEL	1
4	50286557	2-WAY VALVE ASSY	1
5	50280849	KNOB 6.5X18X35	1
6	50286558	2-WAY VALVE SUB ASSY	1
7	50286559	STAY ASSY	1
8	50281040	SHAFT	1
9	50281041	BLOCK,VALVE	1
10	50281427	LEVER	1
11	50281428	PLATE,LOCK	1
12	138515	WASHER 8	1
13	50282384	WASHER 24,POLISHED	1
14	425-34891	SPRING WASHER 6	4
15	50282417	COTTER PIN 2.0X16	1
16	50282421	PIN 8X 30	1
17	50282447	PLUG PT1/8,SCREW	4
18	50282460	O-RING 1A P-25.0	1
19	425-34745	O-RING 1A P-32.0	1
20	425-36271	SCREW M 5 X 12	3
21	50282581	BOLT M 6X 16	4
22	50286560	BOLT, 8X25	2
23	50282380	WASHER 8, POLISHED	2
24	50282392	WASHER, 8	2

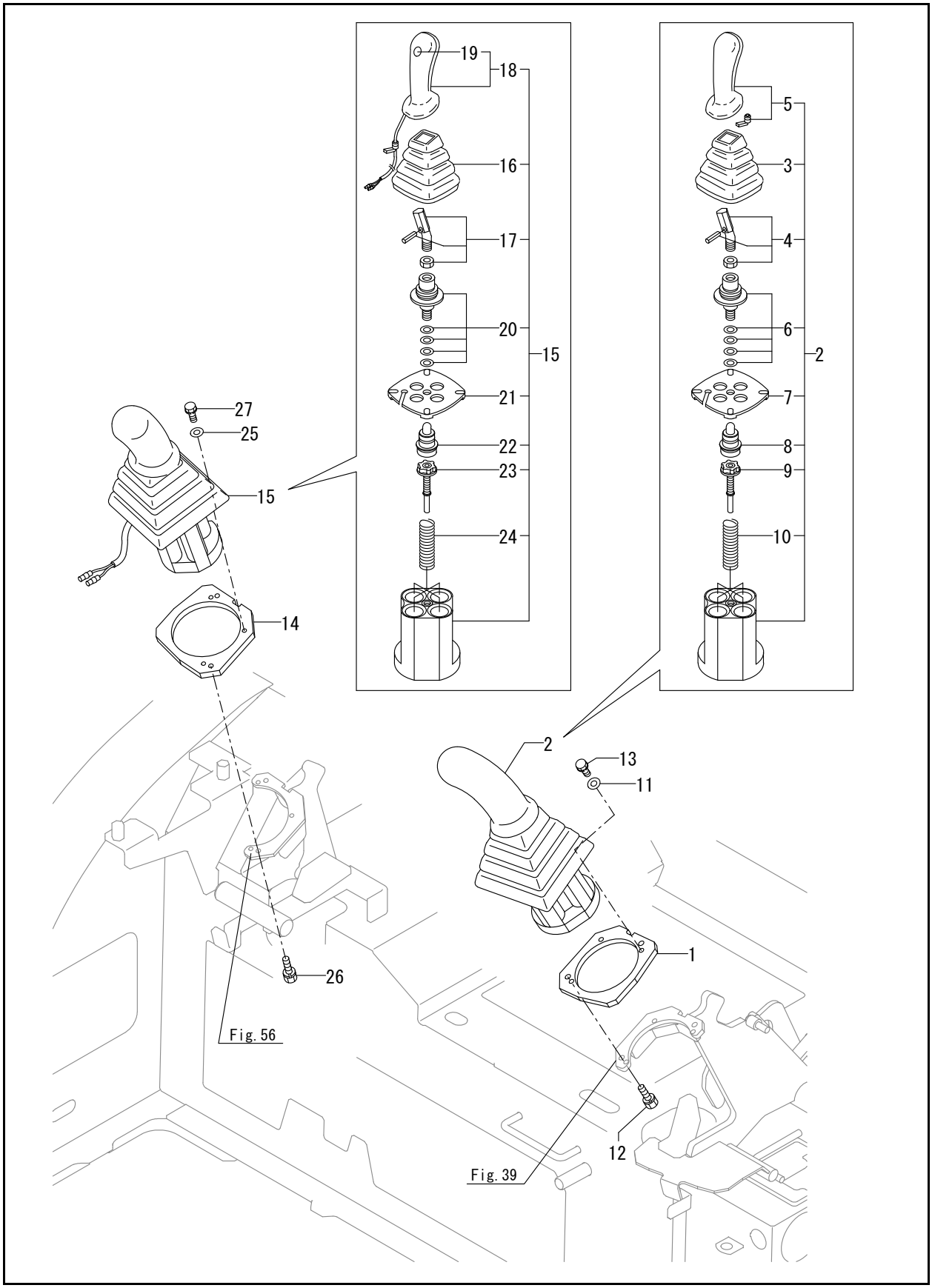
19
18
16
17
20
15
21
22
23
24
27
25
15
14
26
Fig. 56
5
3
4
6
2
7
8
9
10
2
13
11
1
12
Fig. 39

FIG. 95 - REMOTE CONTROL VALVE

Ref. No.	Part No.	Description	Qty.
1	50282081	SPACER,VALVE	1
2	50283223	VALVE ASSY, L.US	1
3	50281044	BELLOWS	1
4	50281045	COMMAND KIT	1
5	50282885	HANDLE L	1
6	50281150	CARDAN KIT	1
7	50281151	RETAINING PLATE	1
8	50281152	PLUNGER KIT	1
9	50281153	REGULATION KIT	4
10	50281154	SPRING KIT	1
11	50282379	WASHER 6, POLISHED	3
12	50282502	BOLT M 6X 16	2
13	50284095	BOLT M6 X 20	3
14	50282081	SPACER,VALVE	1
15	50283702	VALVE ASSY,R PTO	1
16	50281044	BELLOWS	1
17	50281045	COMMAND KIT	1
18	50283703	HANDLE YT	1
19	50283224	PUSH BUTTON	1
20	50281150	CARDAN KIT	1
21	50281151	RETAINING PLATE	1
22	50281152	PLUNGER KIT	1
23	50281153	REGULATION KIT	4
24	50281154	SPRING KIT	1
25	50282379	WASHER 6, POLISHED	3
26	50282502	BOLT M 6X 16	2
27	50284095	BOLT M6 X 20	3

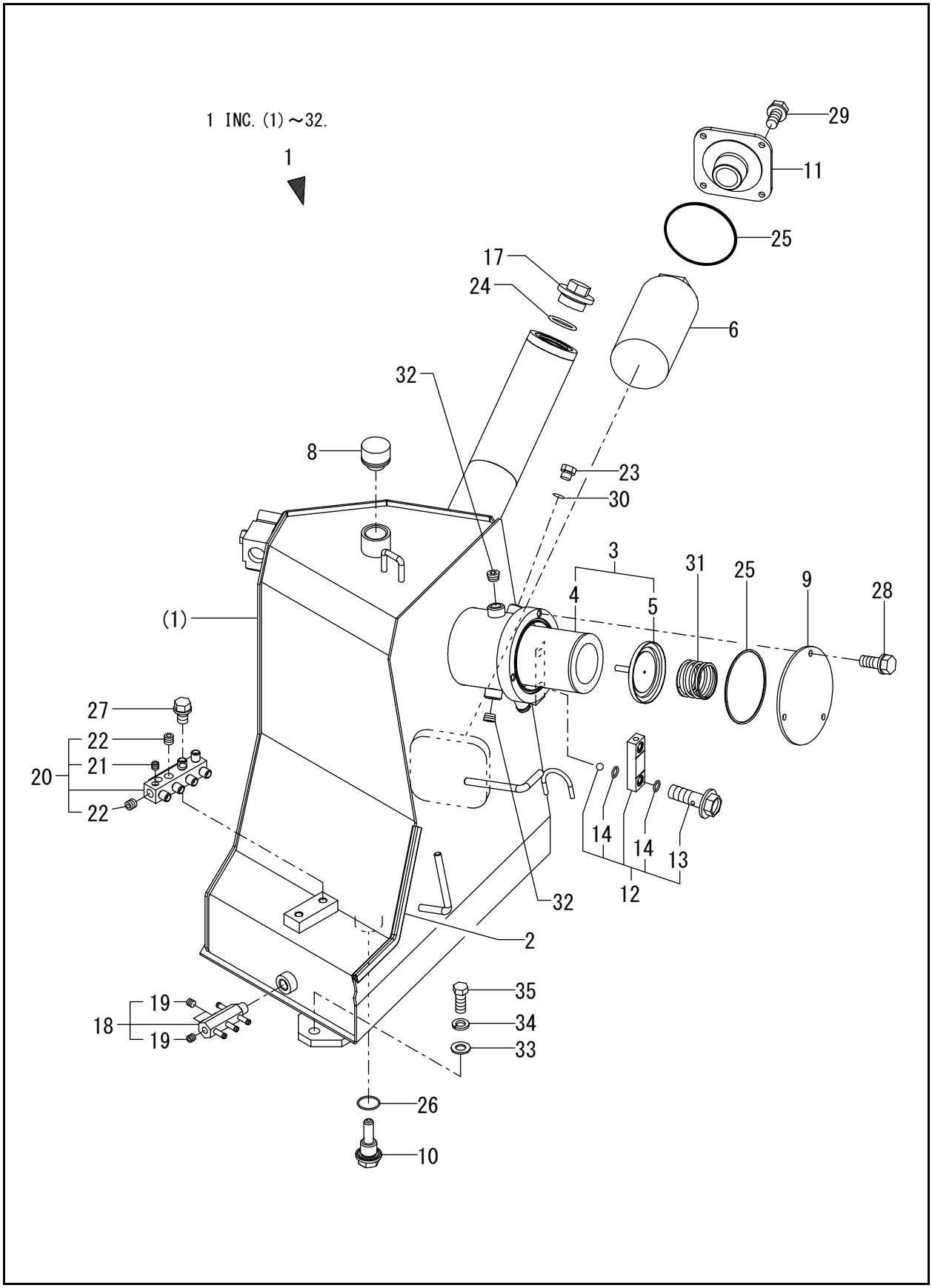
1 INC. (1)～32.
1
29
11
25
17
24
6
32
8
23
30
3
31
25
9
28
4
5
(1)
27
22
21
20
22
14
14
13
12
32
2
35
34
33
19
18
19
26
10

FIG. 96 - HYD. OIL TANK

Ref. No.	Part No.	Description	Qty.
1	50284144	TANK ASSY, OIL	1
2	50282773	RUBBER A,EDGE	1
3	50282821	FILTER ASSY, RETURN	1
4	50282822	ELEMENT	1
5	50282731	VALVE ASSY, BYPASS	1
6	50282738	FILTER, SUCTION	1
8	50282906	CAP	1
9	50283723	COVER, TANK	1
10	50280969	PLUG 24	1
11	50283346	FRANGE, SUCTION	1
12	50282909	GAUGE ASSY	1
13	50281103	BOLT M10	2
14	50281104	O-RING	4
17	50282691	PLUG, OIL FEED	1
18	50283782	DRAIN BLOCK	1
19	425-35678	PLUG PT 1/4 SCREW	3
20	50283783	PILOT BLOCK	1
21	50282447	PLUG PT1/8,SCREW	1
22	425-35678	PLUG PT 1/4 SCREW	2
23	50282805	PLUG PF1/4	1
24	50282462	O-RING 1A P-38.0	1
25	50284083	O-RING 1A G-105.0	2
26	50282493	O-RING 1A S-30.0	1
27	50282515	BOLT W/WASHER M10X20	2
28	50282534	BOLT M 8X 20	3
29	425-35026	BOLT M8 X 25	4
30	50282607	PACKING, 11.0	1
31	50284152	SPRING, SIDE CLUTCH	1
32	425-34728	PLUG PT 3/8	2
33	50284042	WASHER 14,POLISHED	3
34	188712	SPRING/WASHER 14	3
35	50282567	BOLT M14X 35 PLATED	3

FIG. 97 - HYD. OIL PIPING (FITTING : PUMP)

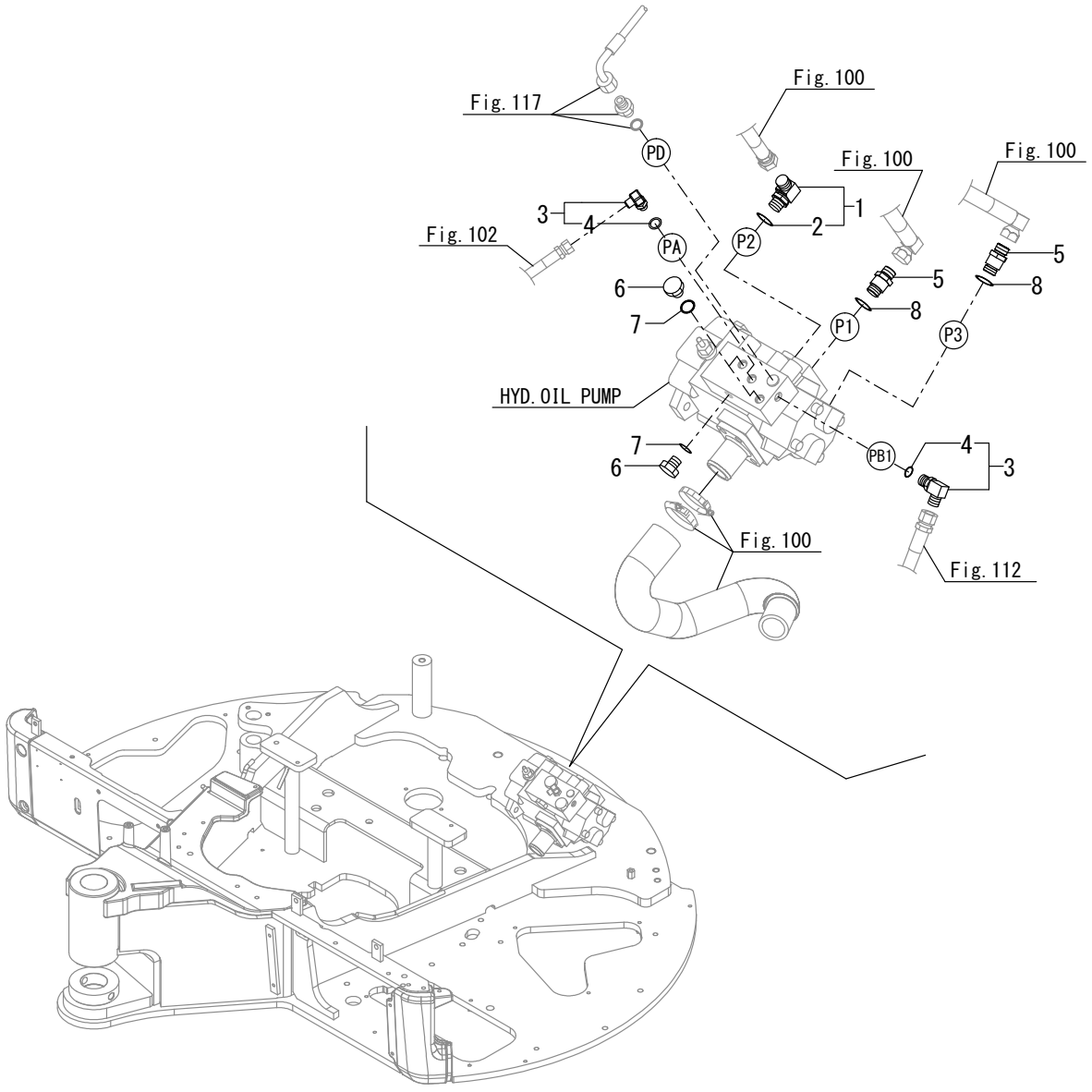

FIG. 97 - HYD. OIL PIPING (FITTING : PUMP)

Ref. No.	Part No.	Description	Qty.
1	50283775	ELBOW 90G1/2-G1/2	1
2	50282609	O RING	1
3	50280813	CONNECTOR ASSY, 02FF	2
4	50282607	PACKING, 11.0	2
5	50280835	CONNECTOR	2
6	50282805	PLUG PF1/4	2
7	50282607	PACKING, 11.0	2
8	50282609	O RING	2

FIG. 98 - HYD. OIL PIPING (FITTING : TURNING MOTOR)

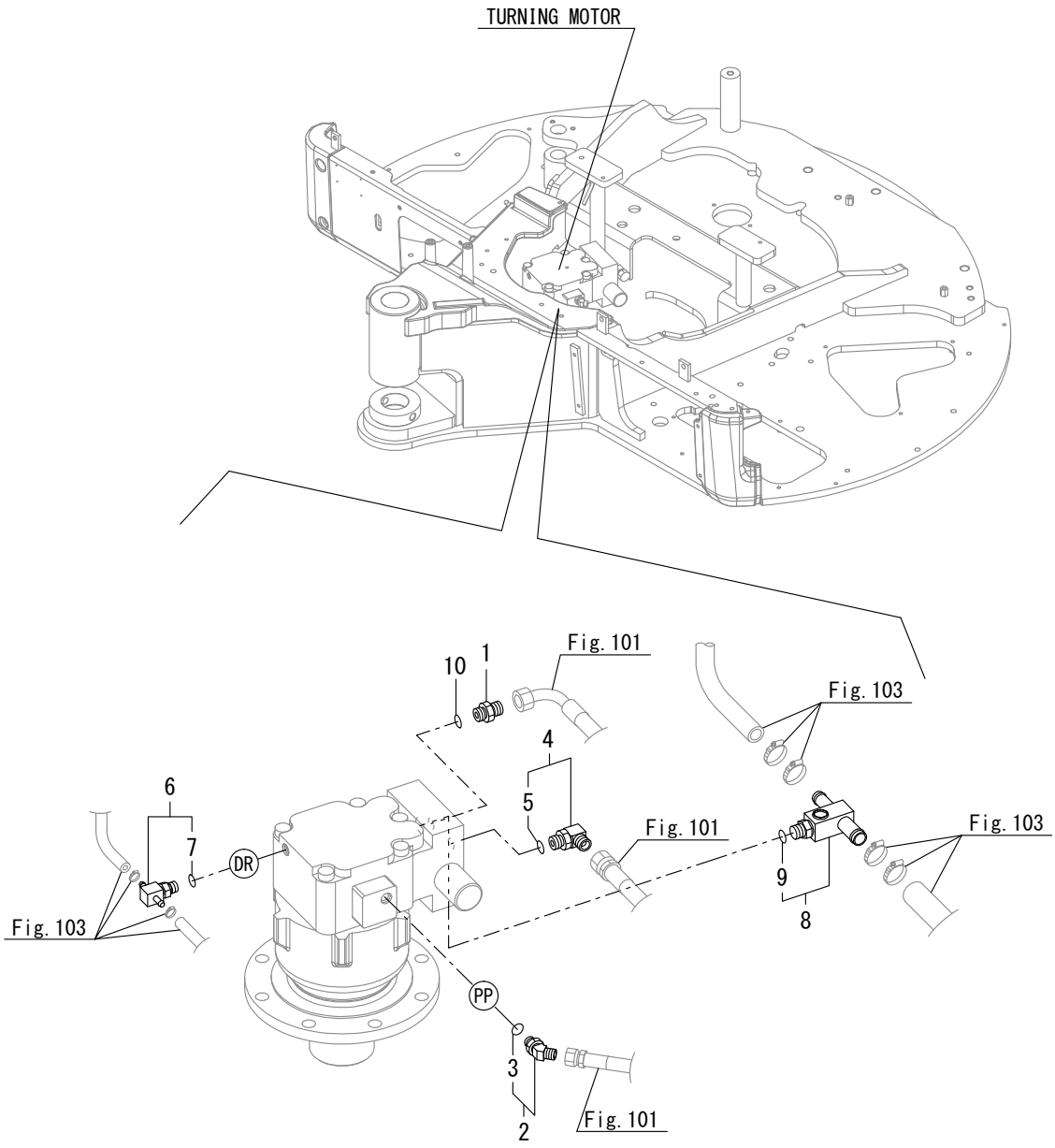

FIG. 98 - HYD. OIL PIPING (FITTING : TURNING MOTOR)

Ref. No.	Part No.	Description	Qty.
1	50281350	JOINT	1
2	50280905	CONNECTOR PF1/4-45	1
3	50282607	PACKING, 11.0	1
4	50280823	JOINT 90-3/8 ASSY	1
5	50282471	O-RING 1B P-14.0	1
6	50281490	NIPPLE G1/4	1
7	50282607	PACKING, 11.0	1
8	50283777	NIPPLE G3/8	1
9	50282608	O RING P 14.0 HNBR	1
10	50282608	O RING P 14.0 HNBR	1

FIG. 99 - HYD. OIL PIPING (FITTING : CONTROL VALVE)

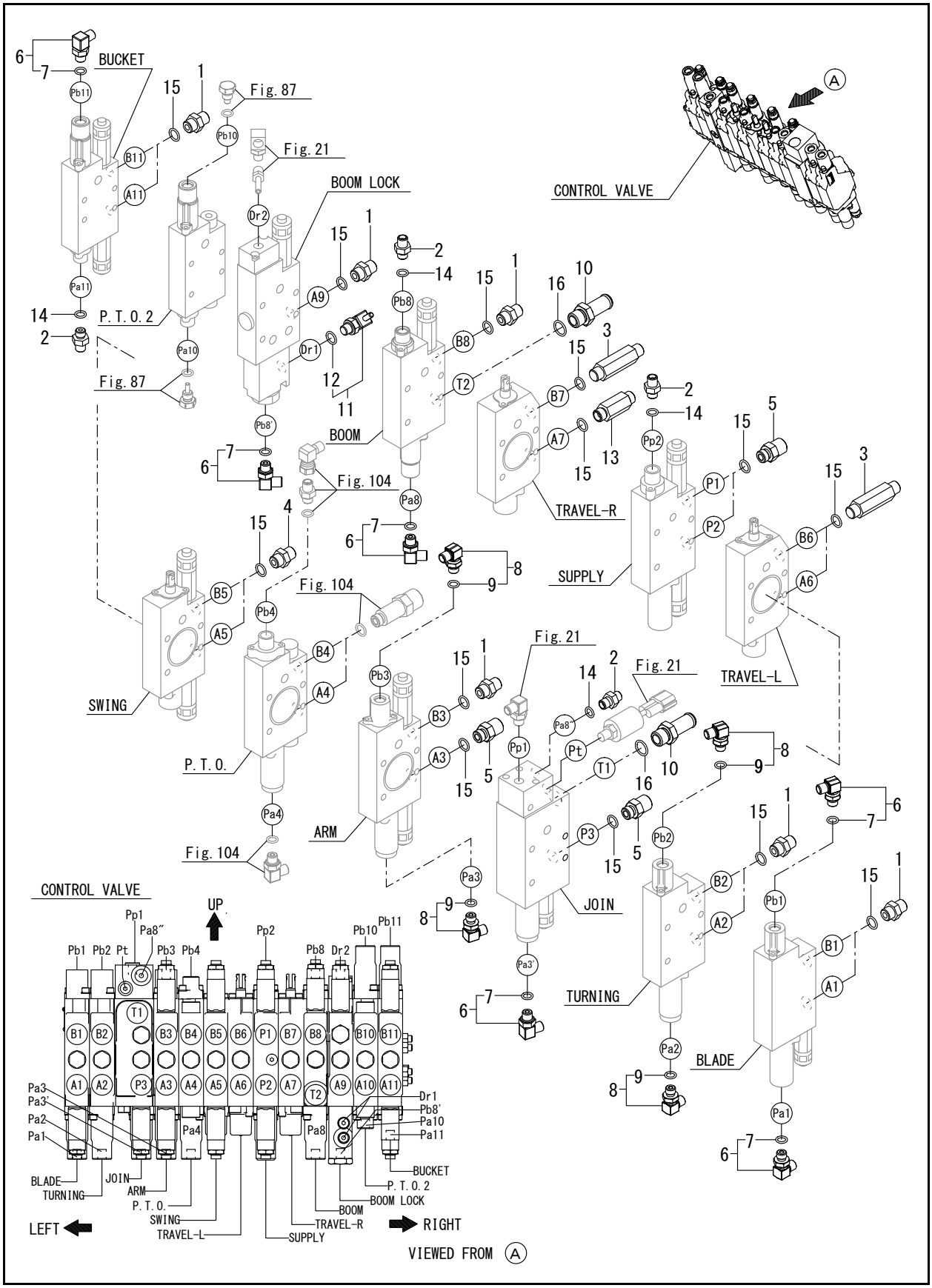

FIG. 99 - HYD. OIL PIPING (FITTING : CONTROL VALVE)

Ref. No.	Part No.	Description	Qty.
1	50281350	JOINT	9
2	50280792	JOINT PF1/4	4
3	50282783	ADAPTER	3
4	50282716	CONNECTOR	2
5	50282816	CONNECTOR	4
6	50280813	CONNECTOR ASSY, 02FF	6
7	50282607	PACKING, 11.0	6
8	50281489	ELBOW,90G1/4-0.6	4
9	50282607	PACKING, 11.0	4
10	50283776	NIPPLE G1/2	2
11	50281490	NIPPLE G1/4	1
12	50282607	PACKING, 11.0	1
13	50282692	ADAPTER 64	1
14	50282607	PACKING, 11.0	4
15	50282608	O RING P 14.0 HNBR	19
16	50282609	O RING	2

FIG. 100 - HYD. OIL PIPING (TANK-PUMP-CONTROL VALVE)

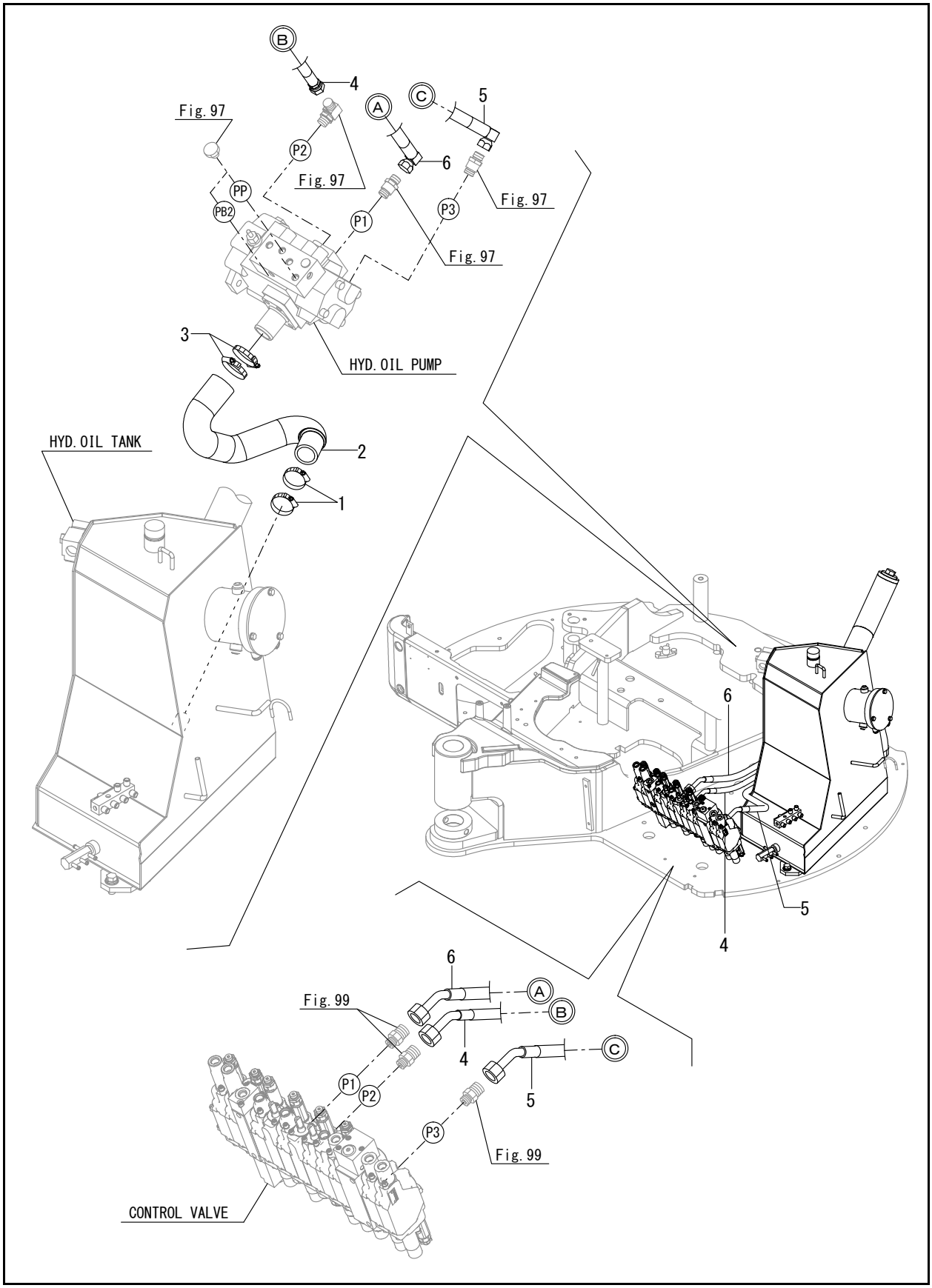

FIG. 100 - HYD. OIL PIPING (TANK-PUMP-CONTROL VALVE)

Ref. No.	Part No.	Description	Qty.
1	50284063	CLIP, HOSE	2
2	50283792	HOSE	1
3	50284064	CLIP	2
4	50283793	HOSE	1
5	50283794	HOSE	1
6	50283885	HOSE	1

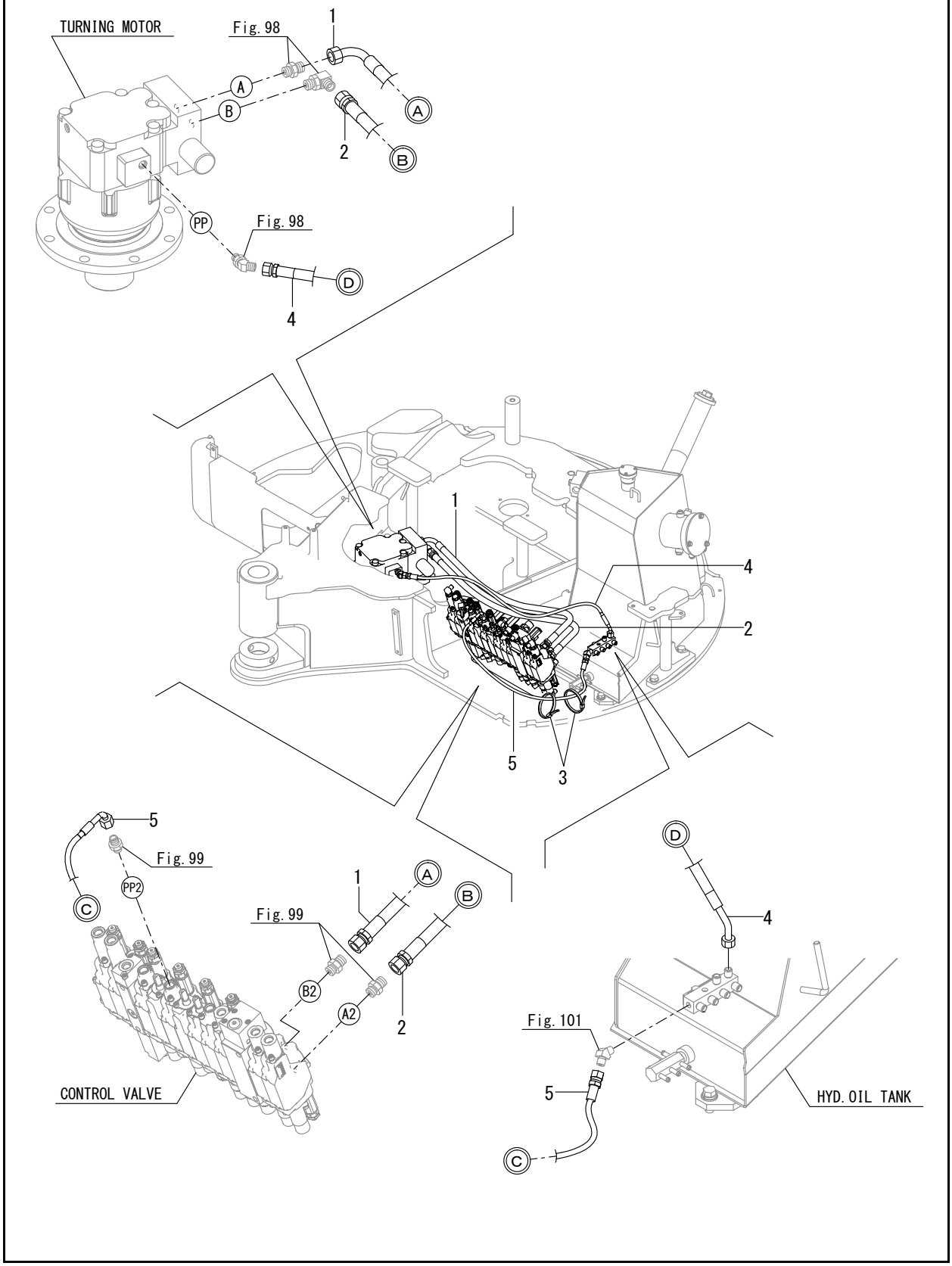
TURNING MOTOR
Fig. 98
1
A
B
A
2
B
PP
Fig. 98
D
4
1
4
2
5
3
5
Fig. 99
PP2
C
1
A
B
Fig. 99
B2
A2
2
CONTROL VALVE
D
4
Fig. 101
5
C
HYD. OIL TANK

FIG. 101 - HYD. OIL PIPING (VALVE-TURNING MOTOR)

Ref. No.	Part No.	Description	Qty.
1	50283800	HOSE	1
2	50283884	HOSE	1
3	50282352	BAND	2
4	50286581	HOSE	1
5	50286582	HOSE	1

Z45 - COMPACT EXCAVATOR

FIG. 102 - HYD. OIL PIPING (VALVE-SWIVEL-SWING CYLINDER)

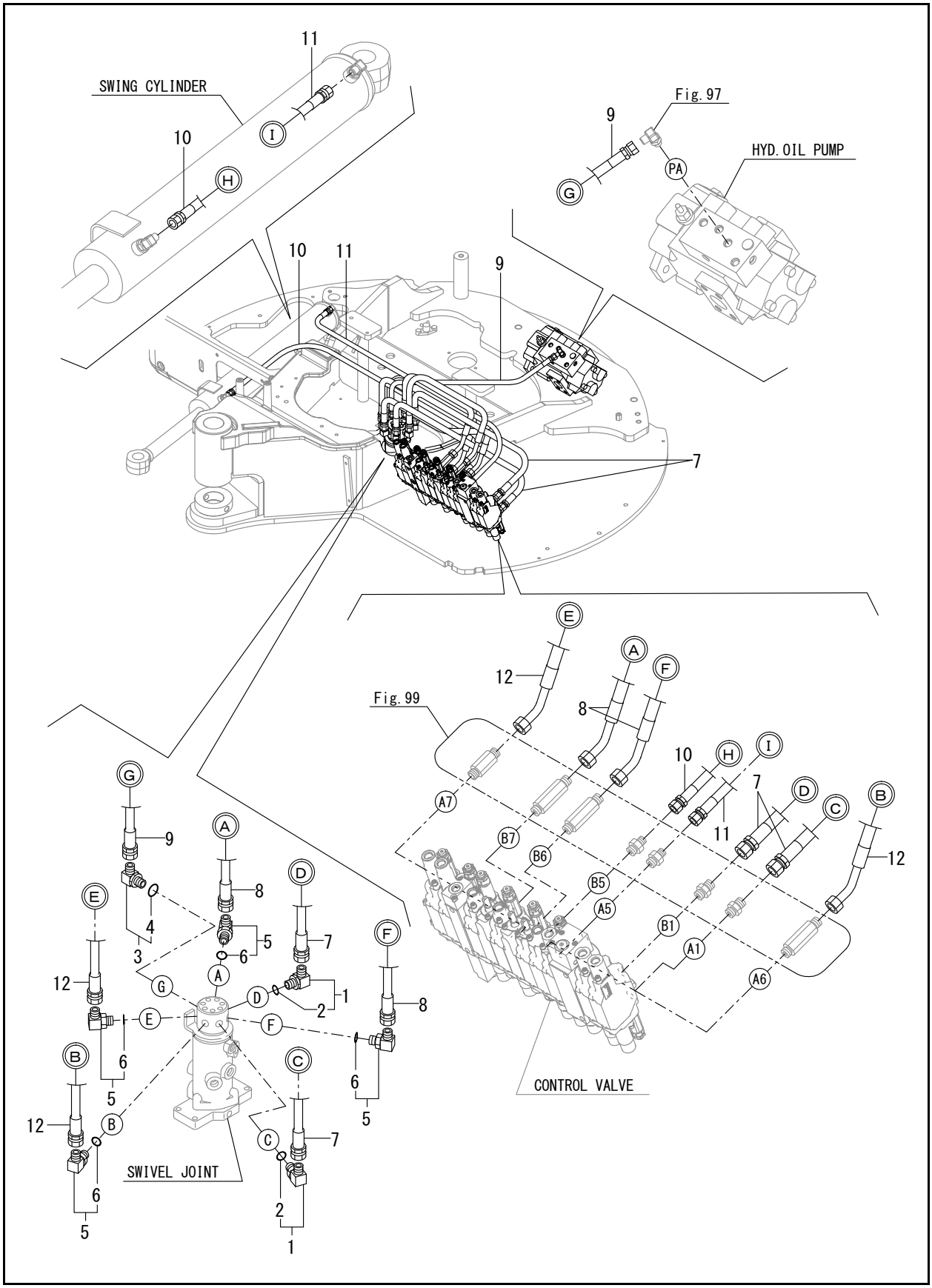

FIG. 102 - HYD. OIL PIPING (VALVE-SWIVEL-SWING CYLINDER)

Ref. No.	Part No.	Description	Qty.
1	50282820	CONNECTOR	2
2	50282607	PACKING, 11.0	2
3	50280813	CONNECTOR ASSY, 02FF	1
4	50282607	PACKING, 11.0	1
5	50280823	JOINT 90-3/8 ASSY	4
6	50282471	O-RING 1B P-14.0	4
7	50283804	HOSE F206BB102S	2
8	50283832	HOSE F206BE071S	2
9	50283847	HOSE	1
10	50283799	HOSE	1
11	50283802	HOSE	1
12	50283832	HOSE F206BE071S	2

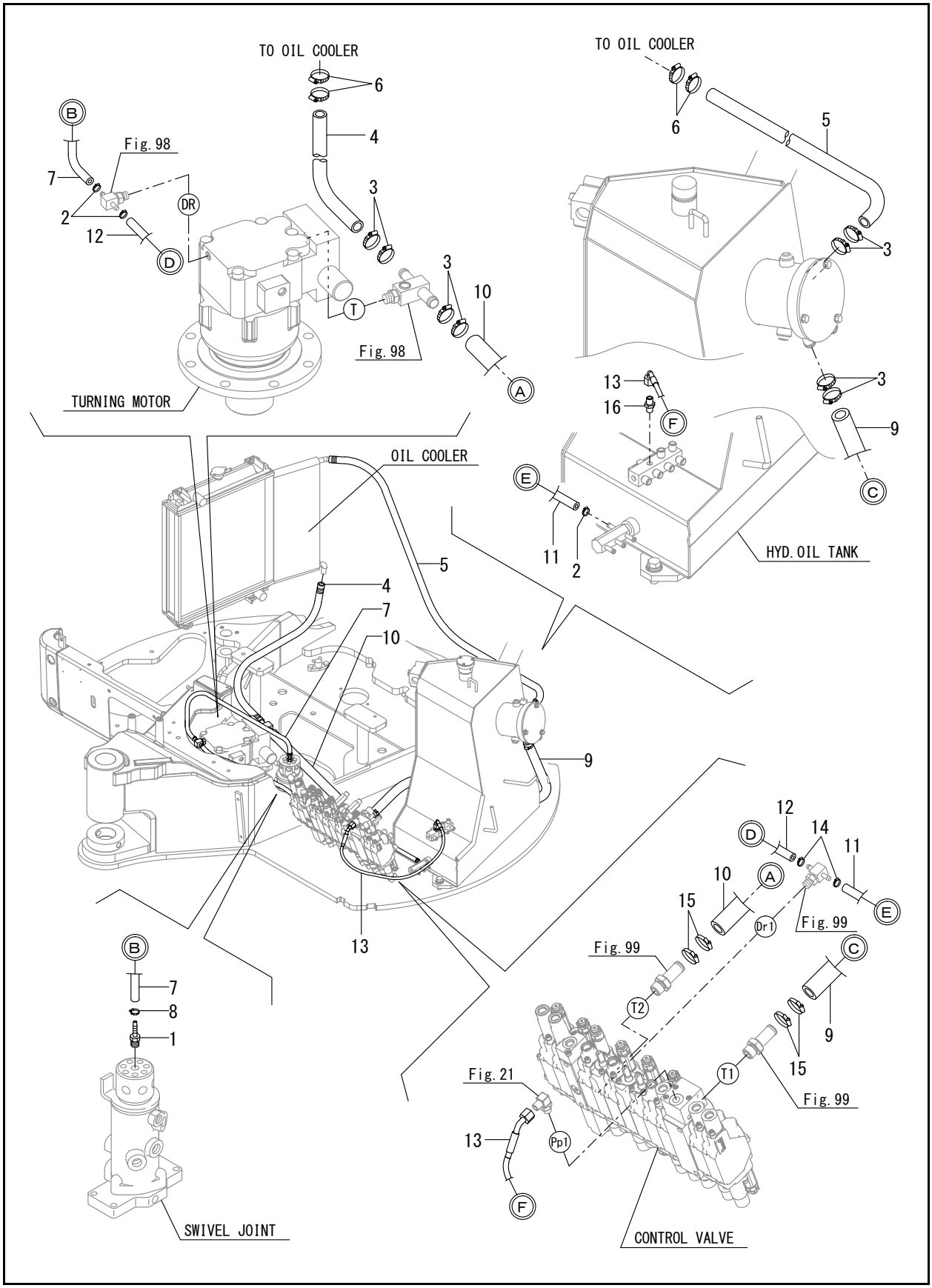
TO OIL COOLER
TO OIL COOLER
Fig. 98
Fig. 98
TURNING MOTOR
OIL COOLER
HYD. OIL TANK
SWIVEL JOINT
CONTROL VALVE
Fig. 99
Fig. 99
Fig. 99
Fig. 21
B
DR
D
T
A
F
E
C
Dr1
T2
T1
Pp1

FIG. 103 - HYD. OIL PIPING (RETURN)

Ref. No.	Part No.	Description	Qty.
1	50282732	NIPPLE	1
2	425-34918	CLAMP 13	3
3	50282428	HOSE CLAMP 25	8
4	50283813	HOSE	1
5	50283814	HOSE	1
6	50282428	HOSE CLAMP 25	4
7	50283816	HOSE G804YY058	1
8	425-34918	CLAMP 13	1
9	50283811	HOSE	1
10	50283916	HOSE	1
11	50283818	HOSE	1
12	50286577	HOSE	1
13	50286588	HOSE	1
14	425-34918	CLAMP 13	2
15	50282428	HOSE CLAMP 25	4
16	50282438	JOINT RGI1/4	1

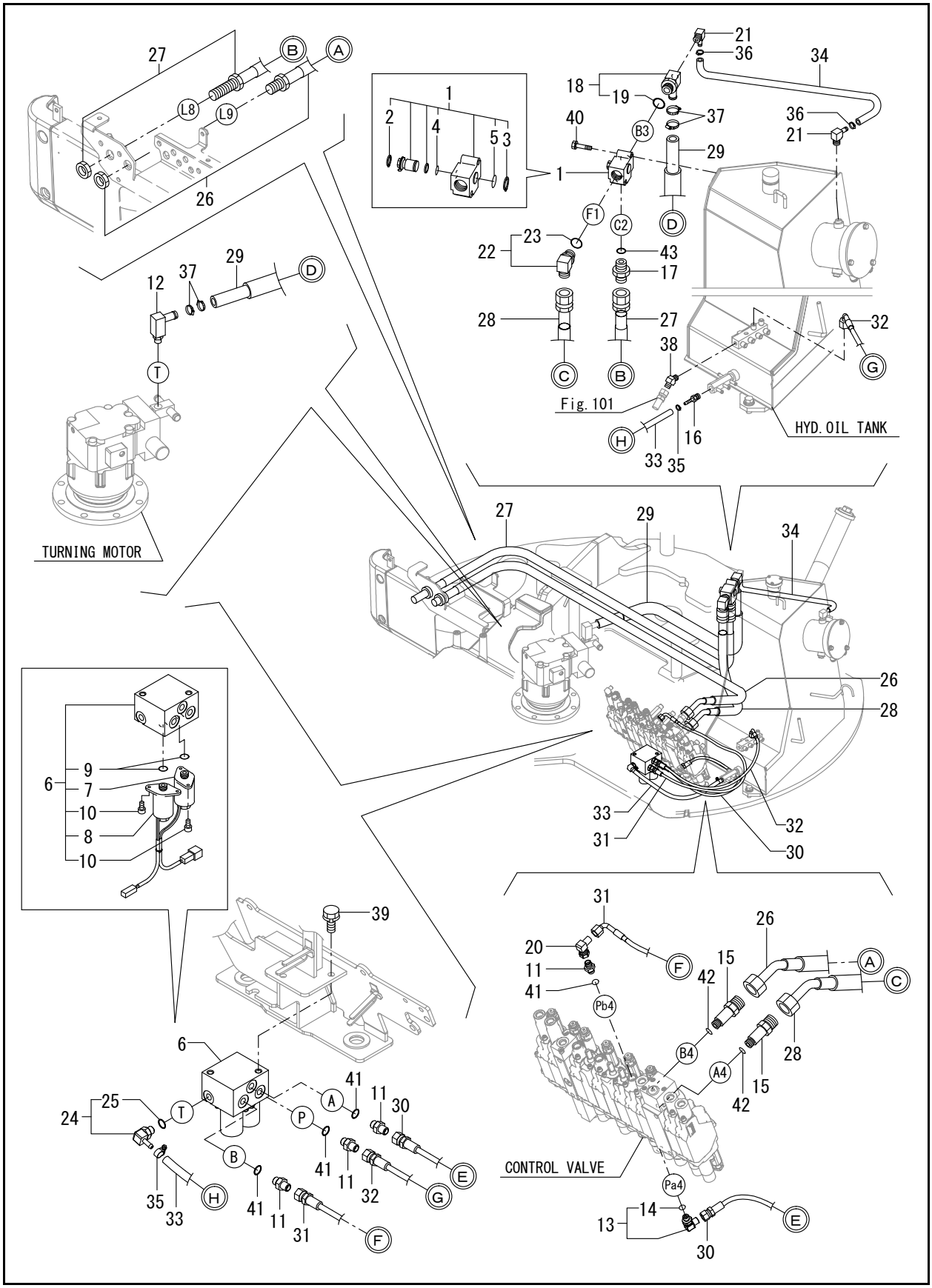
TURNING MOTOR
HYD. OIL TANK
CONTROL VALVE
Fig. 101

FIG. 104 - HYD. OIL PIPING (P.T.O. : TURNING FRAME)

Ref. No.	Part No.	Description	Qty.
1	50283667	VALVE ASSY,SELECOR	1
2	50282398	CIRCLIP 21	1
3	50282399	CIRCLIP 25S	1
4	50282476	O-RING 1B P 21	1
5	50282478	O-RING 1B P-25.0	1
6	50283986	VALVE ASSY,SOL PTO	1
7	50283987	SOLENOID	1
8	50283988	SOLENOID	1
9	425-34744	O-RING 1A P-16.0	2
10	197813	BOLT M5X10	4
11	50280792	JOINT PF1/4	4
12	50281105	ELBOW 90 1/2	1
13	50280813	CONNECTOR ASSY, 02FF	1
14	50282607	PACKING, 11.0	1
15	50282850	CONNECTOR PF3/8-3/4	2
16	50282732	NIPPLE	1
17	50280824	JOINT PF3/4	1
18	50283778	ELBOW NIPPLE 90G3/8	1
19	50282610	PACKING, 24.0	1
20	50281352	CONNECTOR 1/4X1/4	1
21	50280903	ELBOW	2
22	50280898	CONNECTOR PF3/4M CMP	1
23	50282477	O-RING 1B P-24.0	1
24	50280923	NIPPLE	1
25	50282470	O-RING 1B P-11.0	1
26	50283801	HOSE	1
27	50283806	HOSE	1
28	50283807	HOSE	1
29	50283826	HOSE	1
30	50286563	HOSE	1
31	50286564	HOSE	1
32	50286565	HOSE	1
33	50286566	HOSE	1
34	50283857	HOSE	1
35	425-34918	CLAMP 13	2
36	50282426	HOSE CLAMP 16	2
37	50282428	HOSE CLAMP 25	4
38	50282443	JOINT 45RGI1/4	1
39	50282515	BOLT W/WASHER M10X20	2
40	50282521	BOLT M10X 50	2
41	50282607	PACKING, 11.0	4
42	50282608	O RING P 14.0 HNBR	2
43	50282610	PACKING, 24.0	1

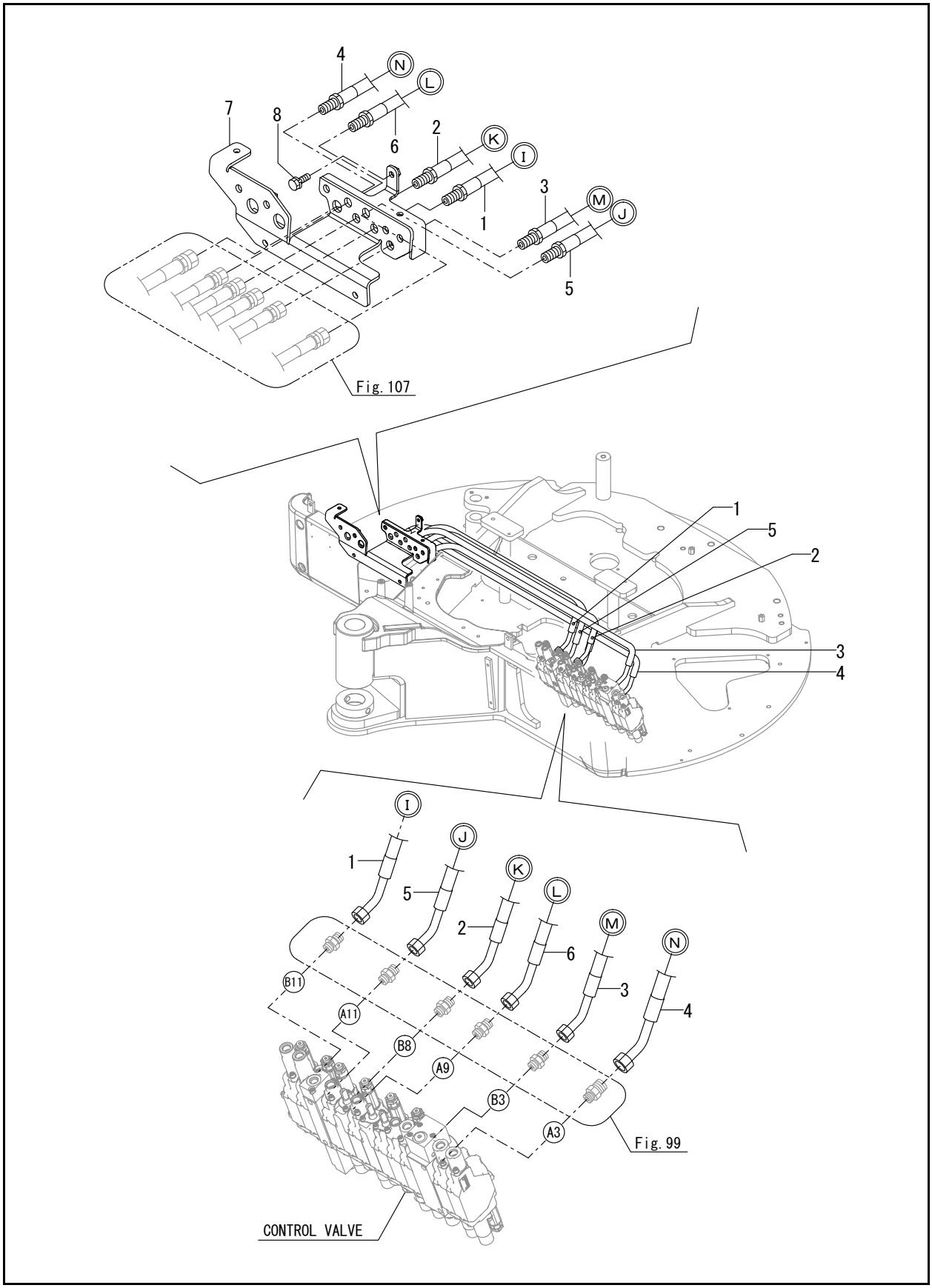
4
N
L
7
8
6
2
K
I
3
M
J
1
5
Fig. 107
1
5
2
3
4
I
J
1
K
L
5
M
2
N
6
3
4
B11
A11
B8
A9
B3
A3
Fig. 99
CONTROL VALVE

FIG. 105 - HYD. OIL PIPING (CONTROL VALVE-FRAME END)

Ref. No.	Part No.	Description	Qty.
1	50283795	HOSE	1
2	50283796	HOSE	1
3	50283797	HOSE	1
4	50283798	HOSE	1
5	50283882	HOSE	1
6	50283883	HOSE	1
7	50283891	COVER ASSY,HOSE	1
8	50282516	BOLT W/WASHER M10X25	2

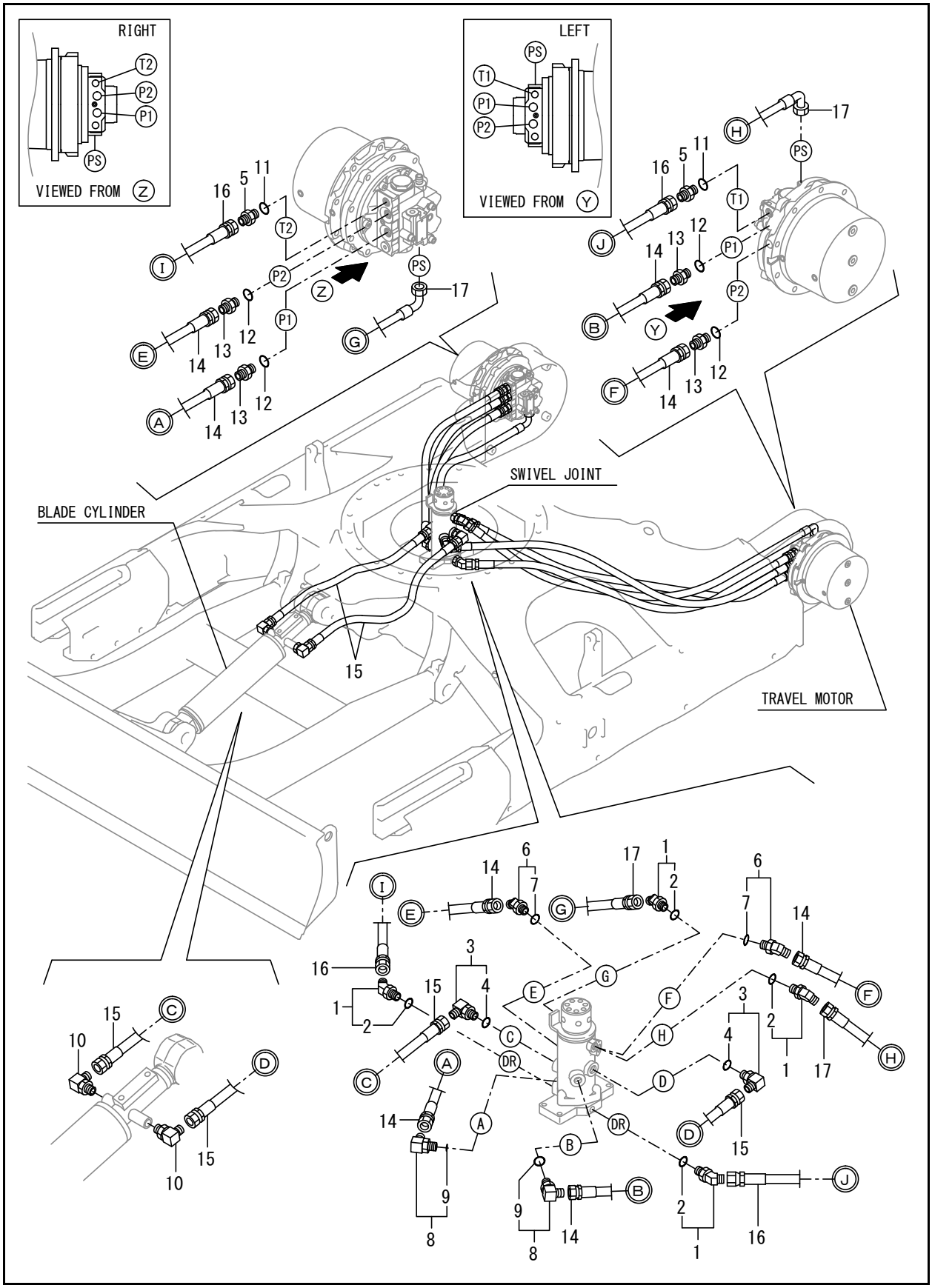
RIGHT
VIEWED FROM Z
LEFT
VIEWED FROM Y
SWIVEL JOINT
BLADE CYLINDER
TRAVEL MOTOR

FIG. 106 - HYD. OIL PIPING (TRUCK FRAME)

Ref. No.	Part No.	Description	Qty.
1	50280905	CONNECTOR PF1/4-45	4
2	50282607	PACKING, 11.0	4
3	50282820	CONNECTOR	2
4	50282607	PACKING, 11.0	2
5	50282716	CONNECTOR	2
6	50283270	ADJUST ELBOW 45	2
7	50282471	O-RING 1B P-14.0	2
8	50280823	JOINT 90-3/8 ASSY	2
9	50282471	O-RING 1B P-14.0	2
10	50284067	JOINT 90RGI 3/8	2
11	50282608	O RING P 14.0 HNBR	2
12	50282609	O RING	4
13	50282619	CONNECTOR PF1/2-3/8	4
14	50283180	HOSE	4
15	50283181	HOSE	2
16	50283897	HOSE	2
17	50283898	HOSE	2

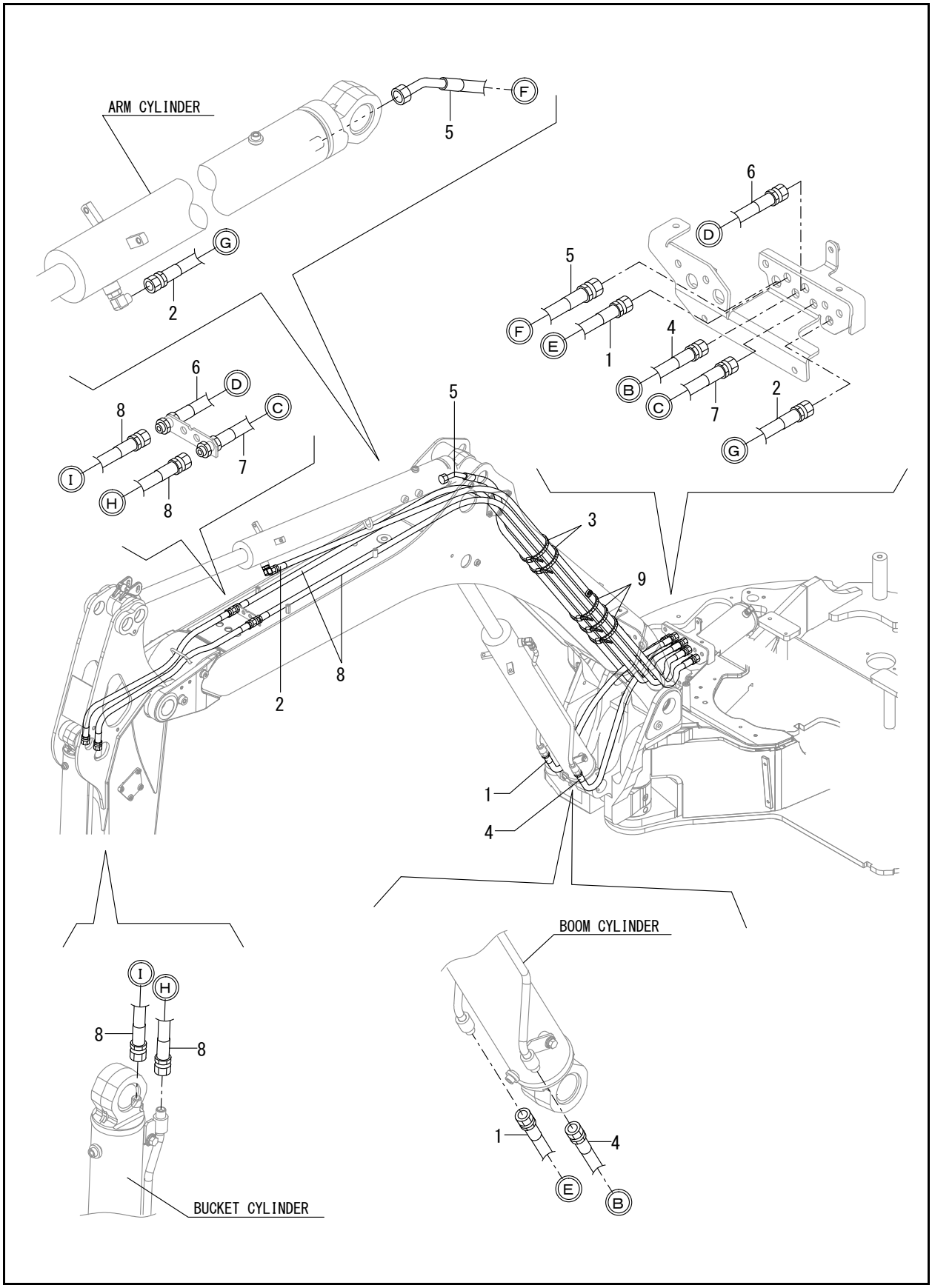
ARM CYLINDER
F
5
G
2
6
D
5
F
E
1
4
B
C
7
2
G
6
D
8
C
7
I
H
8
5
3
9
8
2
1
4
BOOM CYLINDER
I
H
8
8
1
4
E
B
BUCKET CYLINDER

FIG. 107 - HYD. OIL PIPING (BOOM)

Ref. No.	Part No.	Description	Qty.
1	50283863	HOSE H206BB143W	1
2	50283869	HOSE H206BB333K	1
3	50282838	CLIP 400,HOSE	2
4	50283865	HOSE H206BB143W	1
5	50283867	HOSE H208BL248K	1
6	50283871	HOSE H206BX341K	1
7	50283873	HOSE H206BX344K	1
8	50283874	HOSE	2
9	50280791	CLAMP 350	3

Z45 - COMPACT EXCAVATOR

FIG. 108 - HYD. OIL PIPING (P.T.O. : BOOM-ARM)

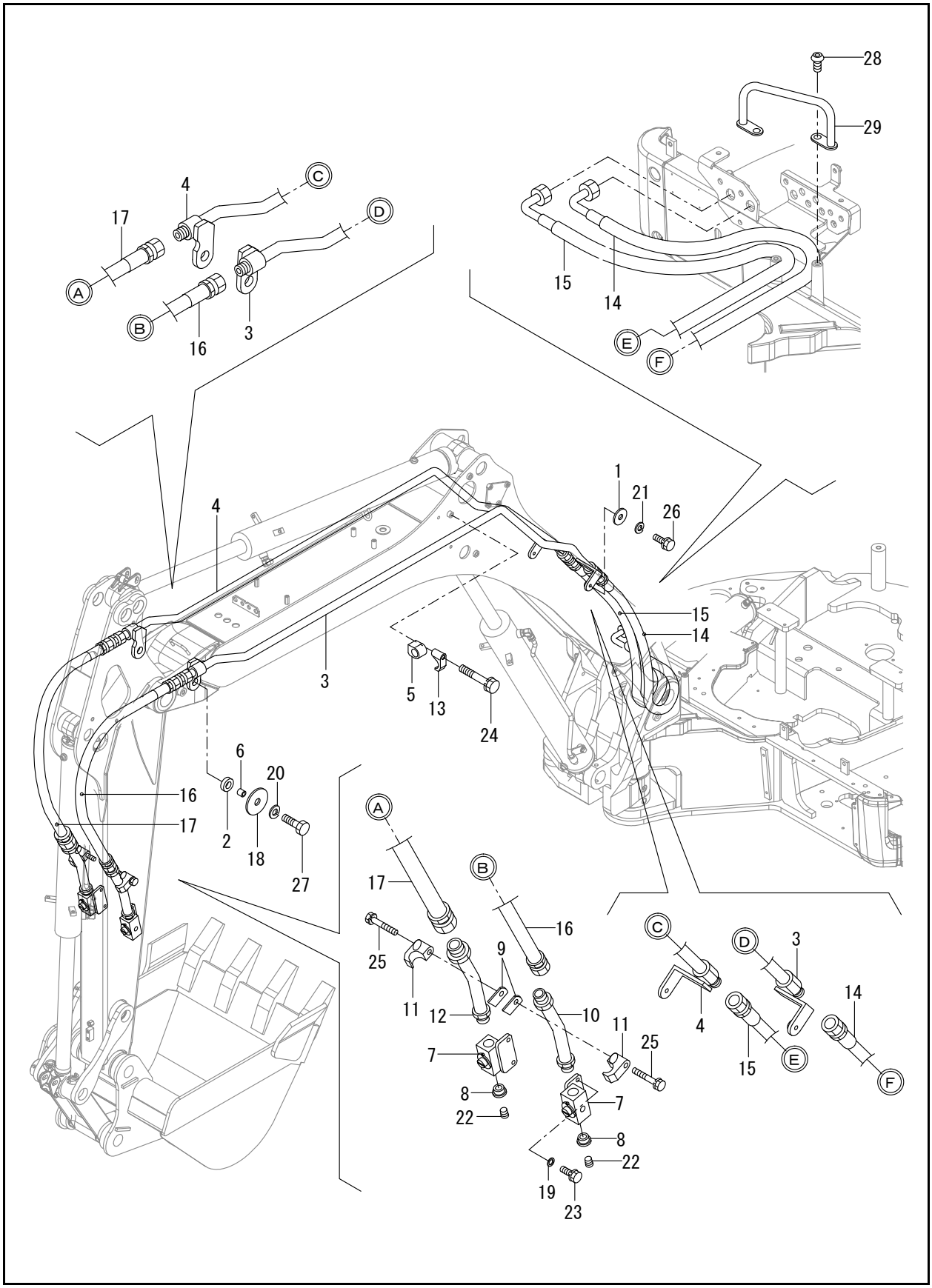

FIG. 108 - HYD. OIL PIPING (P.T.O. : BOOM-ARM)

Ref. No.	Part No.	Description	Qty.
1	50282741	WASHER, 32X12.5	2
2	50283915	PATT	2
3	50286295	PTO TUBE ASSY	1
4	50286297	PTO TUBE ASSY	1
5	50283786	CLAMP PTO	2
6	50283787	COLLER 12.2X20X20	2
7	50286175	STOP VALVE	2
8	50282790	BUSHING	2
9	50286185	PLATE	2
10	50286369	PTO TUBE ASSY	1
11	50286167	CLAMP, 3/4	2
12	50286371	PTO TUBE ASSY	1
13	50286171	CLAMP	2
14	50283809	HOSE G112BC149W	1
15	50283810	HOSE	1
16	50283972	HOSE G112BB097W	1
17	50283974	HOSE G116BB100W	1
18	50282739	SPACER	2
19	138111	WASHER/POLISHED	4
20	425-34902	SPRING WASHER 12	2
21	425-34902	SPRING WASHER 12	2
22	50284069	PLUG PT1/2,SCREW	2
23	50282516	BOLT W/WASHER M10X25	4
24	50282528	BOLT M12X 60	2
25	50282529	BOLT 12X70 W/SP.WSHR	2
26	50284108	BOLT M12 X 30	2
27	50284109	BOLT 10.9 M12 X 4	2
28	50281073	BOLT M 10X20	2
29	50283890	GUIDE, ASSY, HOSE	1

Z45 - COMPACT EXCAVATOR

FIG. 110 - HYD. OIL PIPING (QUICK COUPLER)

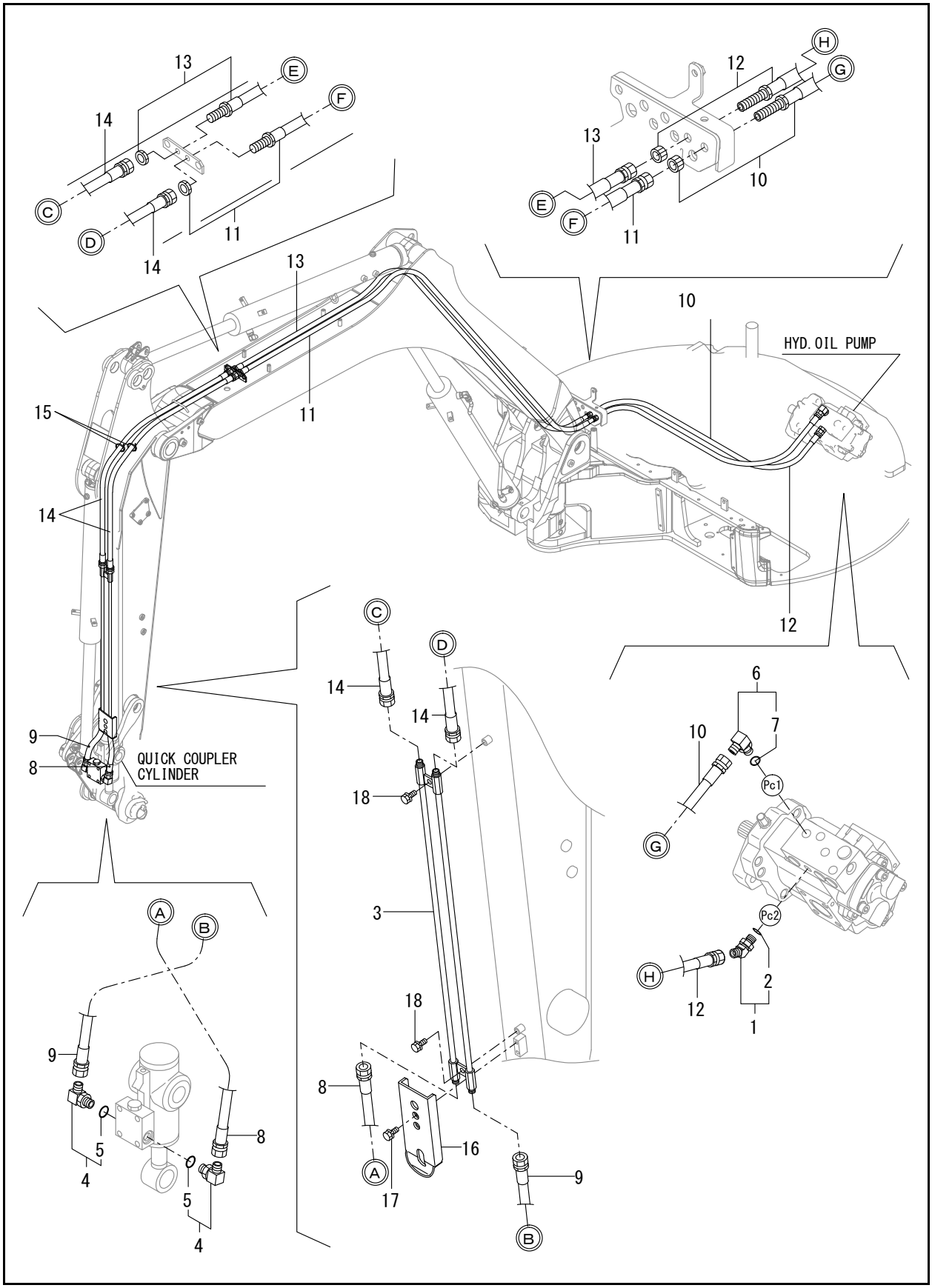

FIG. 110 - HYD. OIL PIPING (QUICK COUPLER)

Ref. No.	Part No.	Description	Qty.
1	50280905	CONNECTOR PF1/4-45	1
2	50282607	PACKING, 11.0	1
3	50286235	HITCH TUBE	1
4	50283278	ELBOW PF1/4-PF1/4	2
5	50282470	O-RING 1B P-11.0	2
6	50280813	CONNECTOR ASSY, 02FF	1
7	50282607	PACKING, 11.0	1
8	50281377	HOSE	1
9	50283279	HOSE	1
10	50283823	HOSE	1
11	50283825	HOSE H204BX344K	1
12	50283856	HOSE	1
13	50283893	HOSE H204BX343K	1
14	50283894	HOSE	2
15	50282709	CLAMP B	2
16	50286237	COVER ASSY	1
17	50282506	BOLT W/WASHER M8X16	2
18	50282515	BOLT W/WASHER M10X20	2

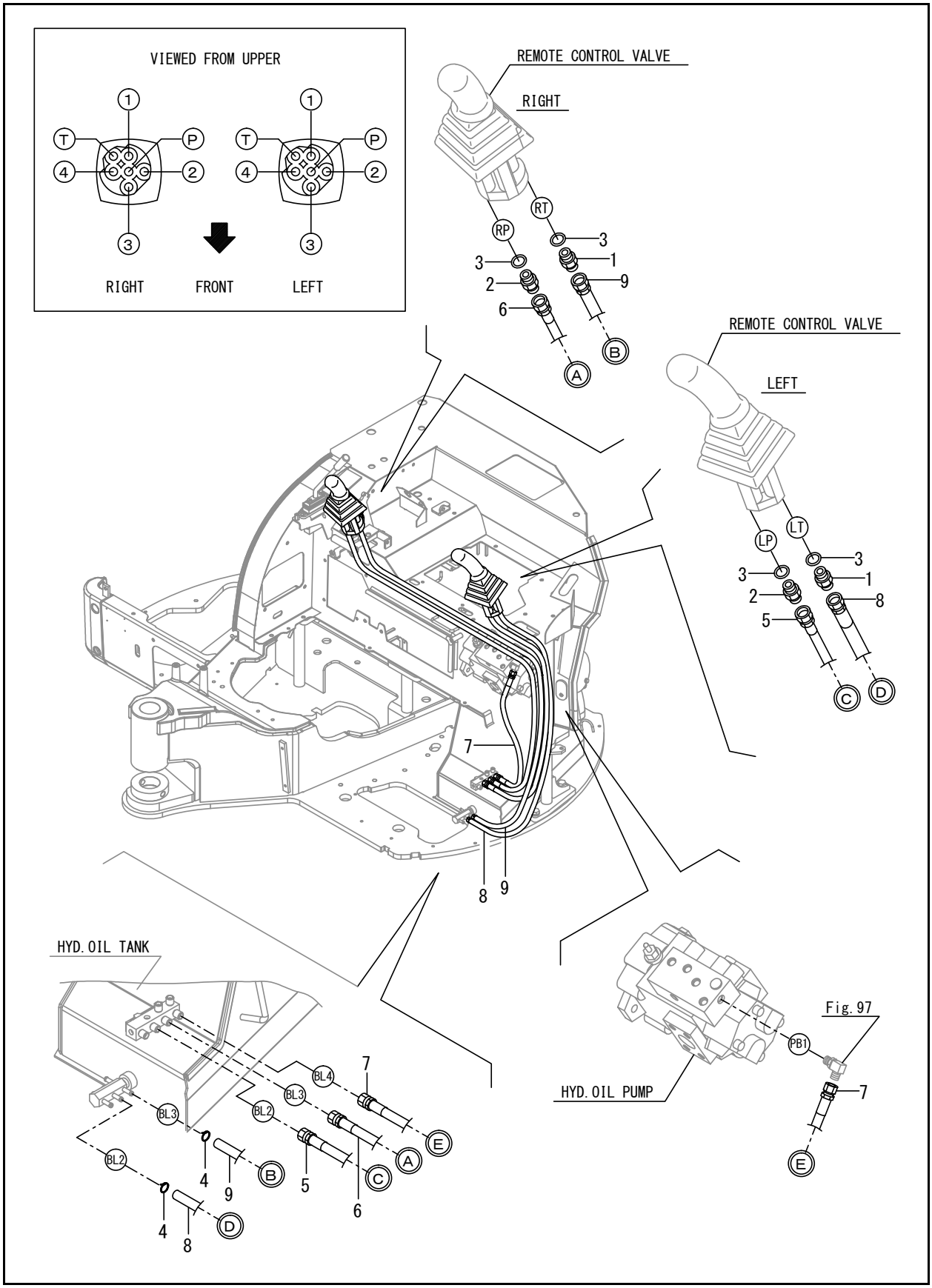
VIEWED FROM UPPER
RIGHT
FRONT
LEFT
REMOTE CONTROL VALVE
RIGHT
REMOTE CONTROL VALVE
LEFT
HYD. OIL TANK
HYD. OIL PUMP
Fig. 97

FIG. 112 - CONTROL PIPING (PUMP-VALVE-RETURN)

Ref. No.	Part No.	Description	Qty.
1	50280792	JOINT PF1/4	2
2	50281106	CONNECTOR PF1/4	2
3	50282607	PACKING, 11.0	4
4	425-34918	CLAMP 13	2
5	50283842	HOSE	1
6	50283843	HOSE	1
7	50283844	HOSE	1
8	50283851	HOSE	1
9	50283852	HOSE	1

Z45 - COMPACT EXCAVATOR

FIG. 113 - CONTROL PIPING (2-WAY VALVE : 1)

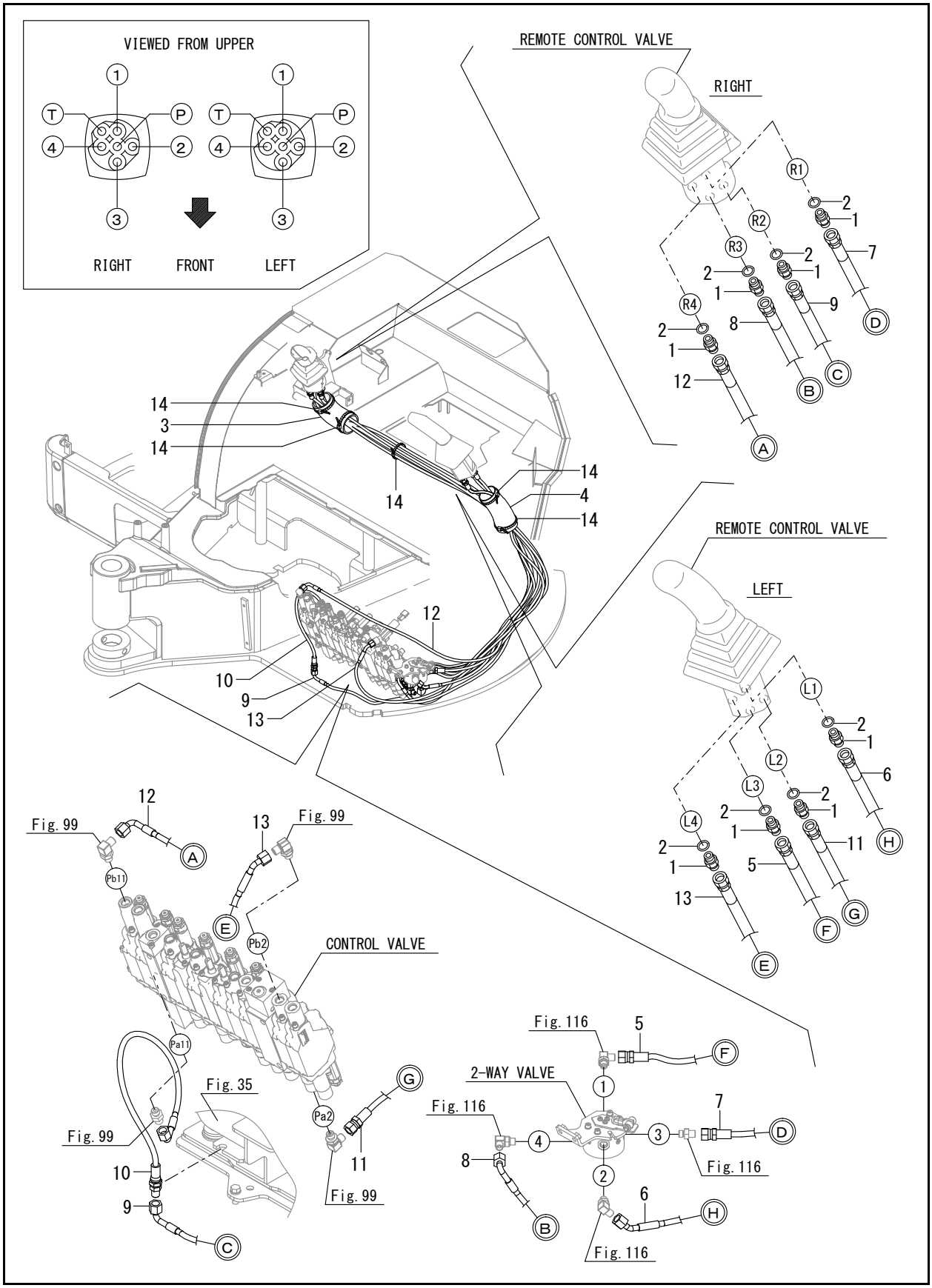

FIG. 113 - CONTROL PIPING (2-WAY VALVE : 1)

Ref. No.	Part No.	Description	Qty.
1	50280792	JOINT PF1/4	8
2	50282607	PACKING, 11.0	8
3	50282972	SOUND SHIELD,HOSE	1
4	50283069	SOUND SHIELD,HOSE	1
5	50286573	HOSE	1
6	50286574	HOSE	1
7	50286575	HOSE	1
8	50286576	HOSE	1
9	50286578	HOSE	1
10	50286579	HOSE	1
11	50286584	HOSE	1
12	50286585	HOSE	1
13	50286587	HOSE	1
14	50282709	CLAMP B	5

FIG. 114 - CONTROL PIPING (2-WAY VALVE : 2)

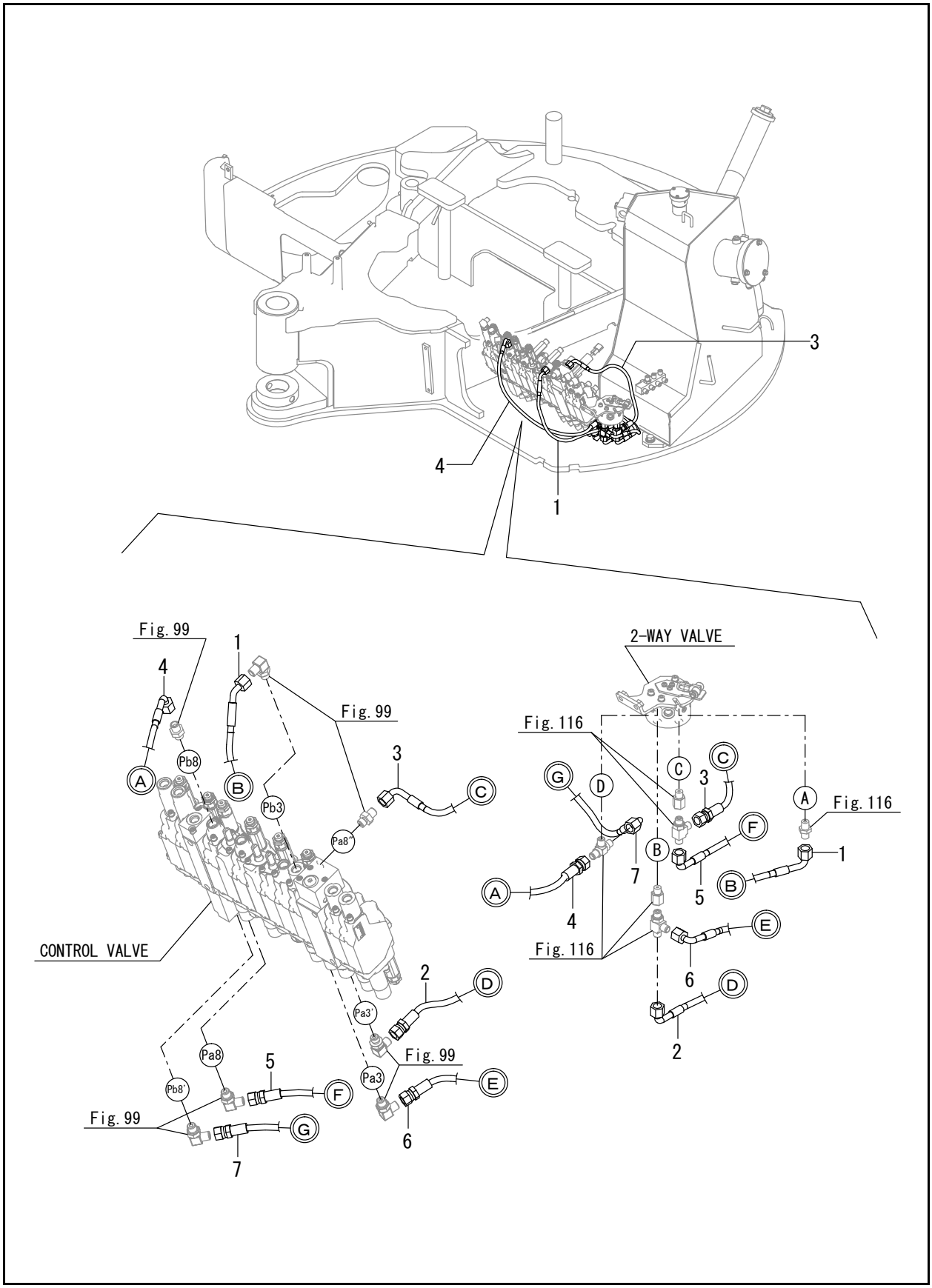

FIG. 114 - CONTROL PIPING (2-WAY VALVE : 2)

Ref. No.	Part No.	Description	Qty.
1	50286567	HOSE	1
2	50286568	HOSE	1
3	50286569	HOSE	1
4	50286570	HOSE	1
5	50286571	HOSE	1
6	50286572	HOSE	1
7	50286586	HOSE	1

FIG. 115 - CONTROL PIPING (VALVE-BLADE VALVE)

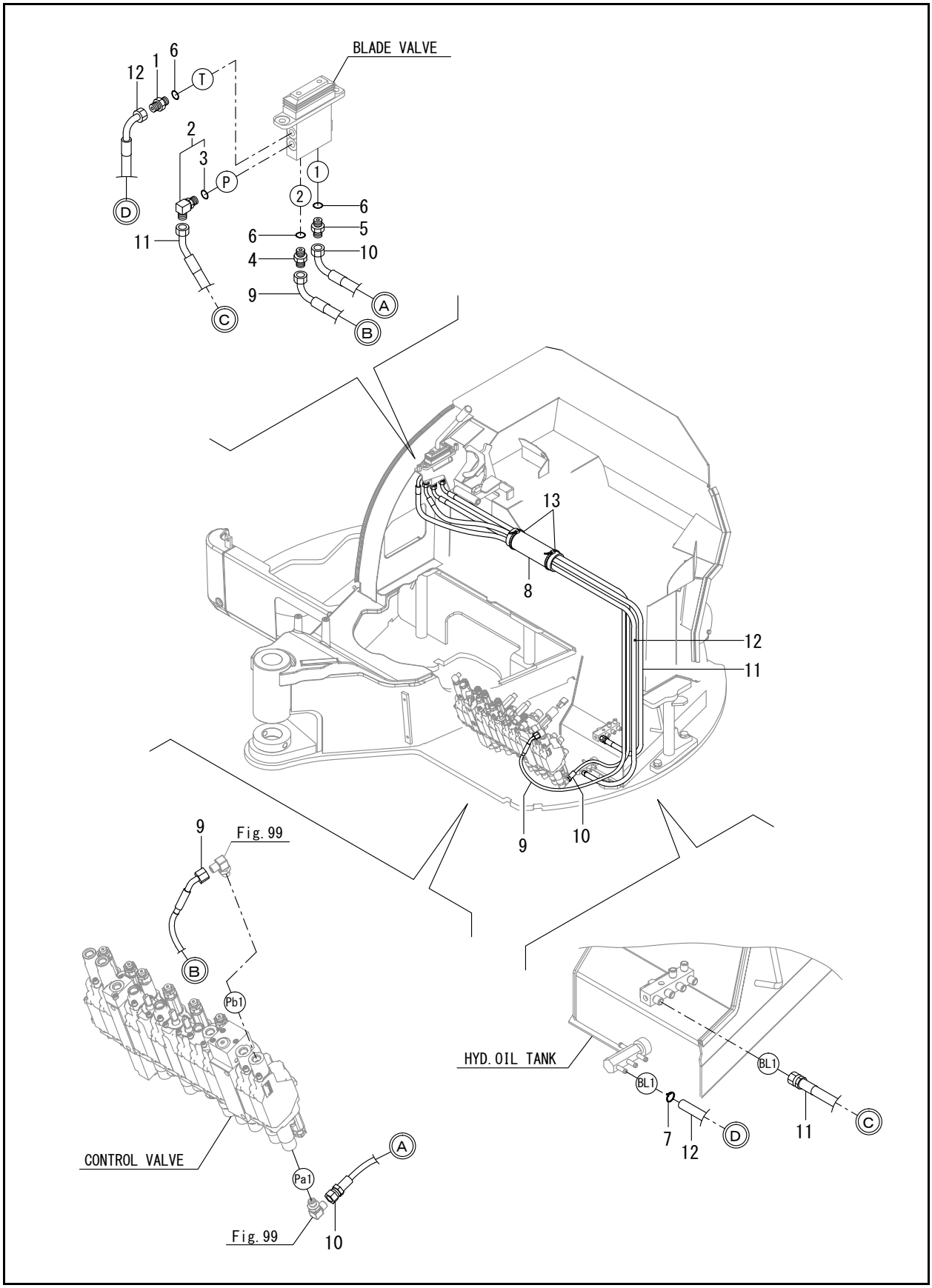

FIG. 115 - CONTROL PIPING (VALVE-BLADE VALVE)

Ref. No.	Part No.	Description	Qty.
1	50280792	JOINT PF1/4	1
2	50283278	ELBOW PF1/4-PF1/4	1
3	50282470	O-RING 1B P-11.0	1
4	50281488	CONNECTOR G1/4-1.0	1
5	50280890	JOINT PF1/4-0.7	1
6	50282607	PACKING, 11.0	3
7	425-34918	CLAMP 13	1
8	50283069	SOUND SHIELD,HOSE	1
9	50286580	HOSE	1
10	50286583	HOSE	1
11	50283880	HOSE	1
12	50283881	HOSE	1
13	50282709	CLAMP B	2

FIG. 116 - CONTROL PIPING (2-WAY VALVE : FITTING)

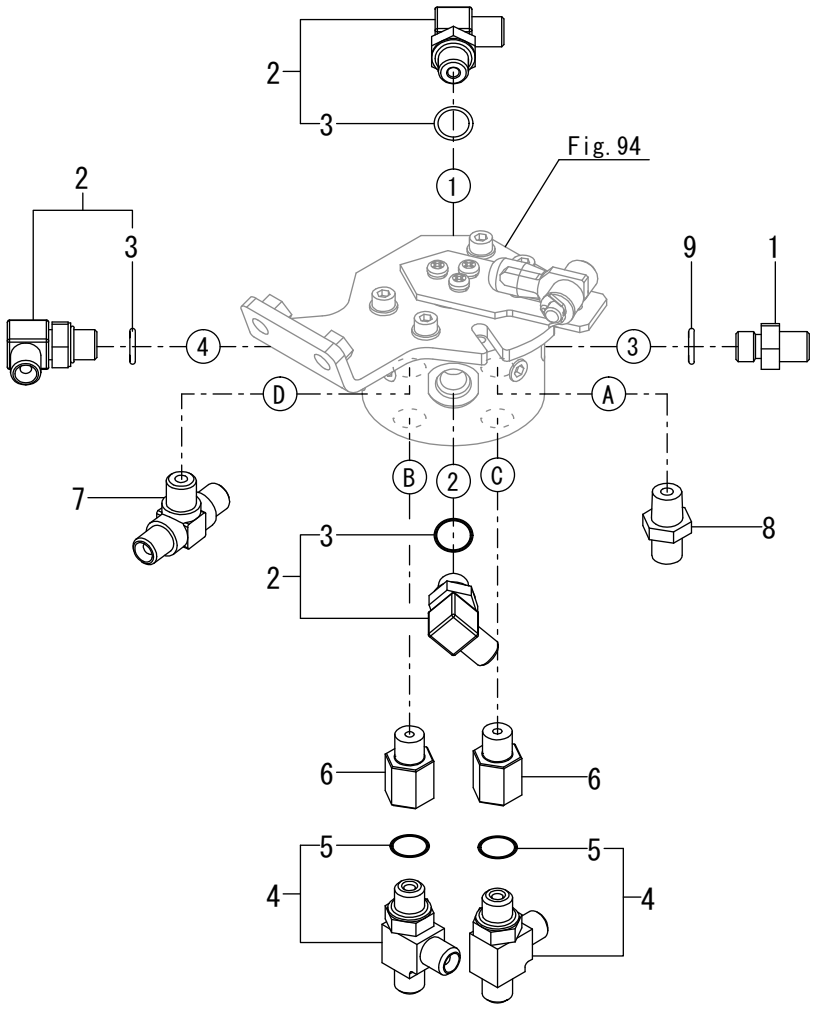

FIG. 116 - CONTROL PIPING (2-WAY VALVE : FITTING)

Ref. No.	Part No.	Description	Qty.
1	50280792	JOINT PF1/4	1
2	50280813	CONNECTOR ASSY, 02FF	3
3	50282607	PACKING, 11.0	3
4	50280875	JOINT 3-1/4 ASSY	2
5	50282607	PACKING, 11.0	2
6	50286562	CONNECTOR	2
7	50280876	CONNECTOR 3-1/4	1
8	50282438	JOINT RGI1/4	1
9	50282607	PACKING, 11.0	1

FIG. 117 - ACCUMULATOR

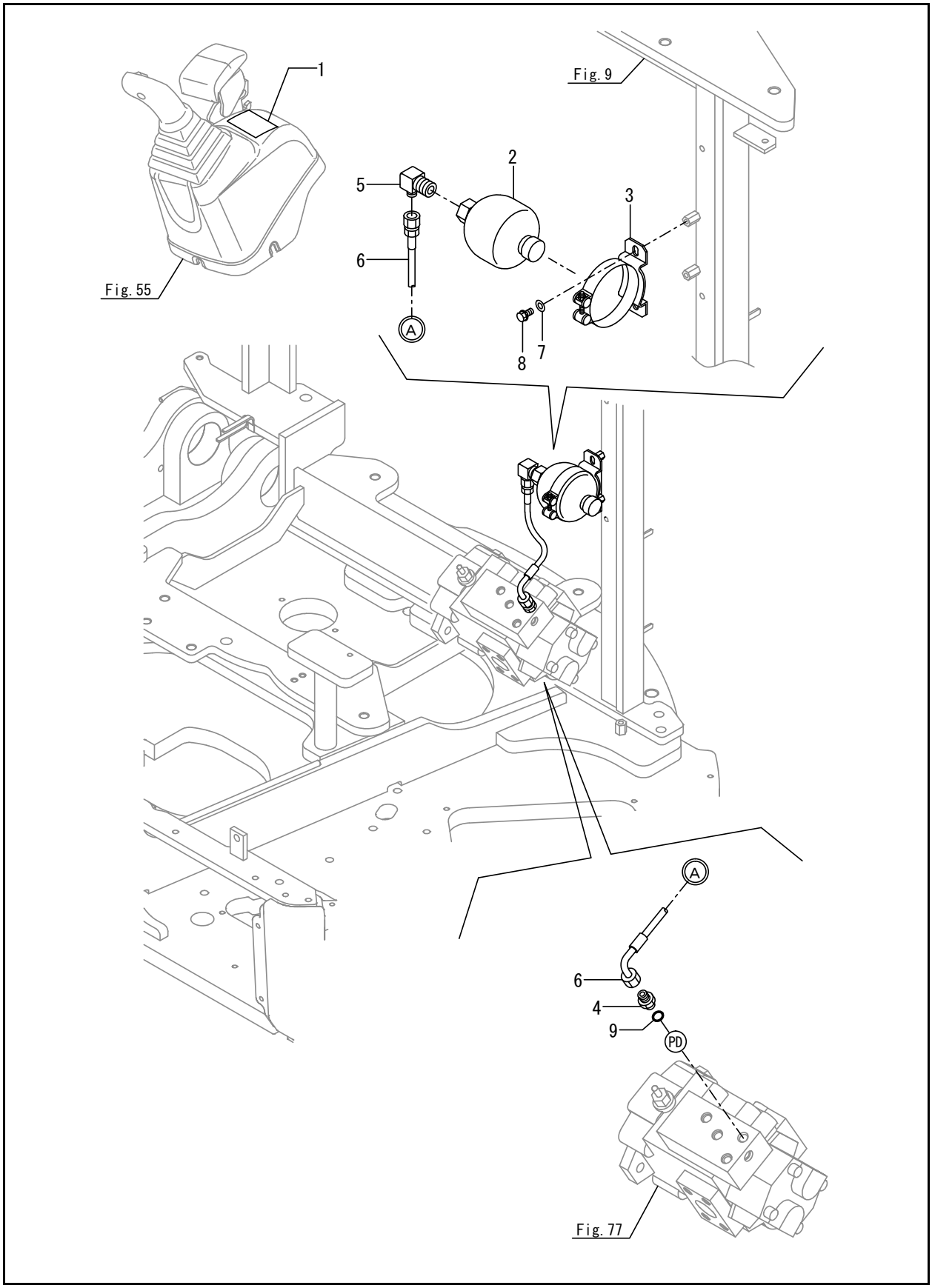

FIG. 117 - ACCUMULATOR

Ref. No.	Part No.	Description	Qty.
1	50283362	LABEL,PTO EX	1
2	50281200	ACCUMULATOR	1
3	50281201	CLAMP	1
4	50280792	JOINT PF1/4	1
5	50281206	CONNECTOR	1
6	50283182	HOSE	1
7	50282380	WASHER 8, POLISHED	2
8	50282506	BOLT W/WASHER M8X16	2
9	50282607	PACKING, 11.0	1

FIG. 118 - BOOM BRACKET

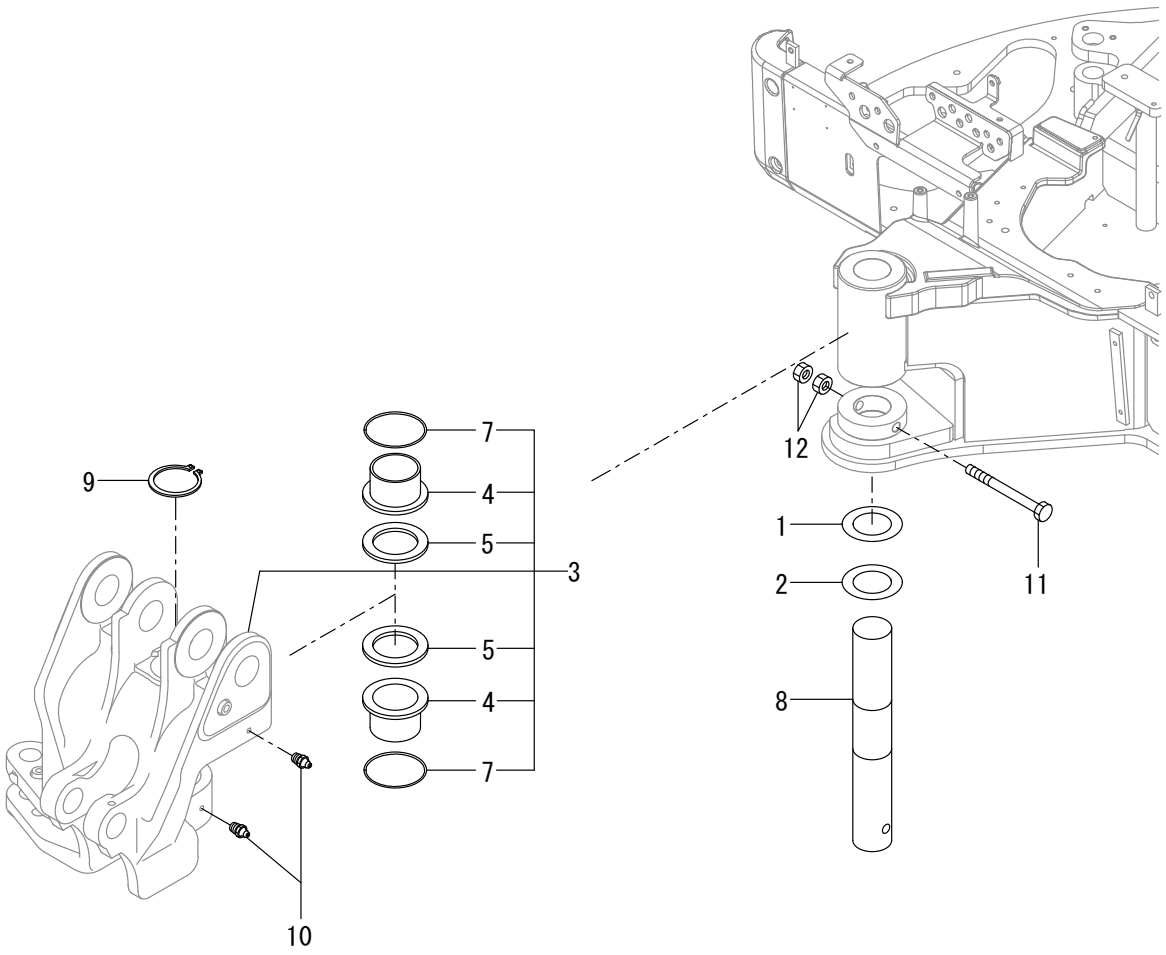

FIG. 118 - BOOM BRACKET

Ref. No.	Part No.	Description	Qty.
1	50280915	SHIM	1
2	50280916	SHIM	1
3	50286205	BOOM BRACKET	1
4	50282807	BUSHING 70X85	2
5	50282808	SEAL, DUST	2
7	186610	O-RING 1A G70.0 NBR	2
8	50283197	PIN, 70X466	1
9	50282404	CIRCLIP 70	1
10	50282497	NIPPLE PT1/8,GREASE	2
11	50284111	BOLT 10.9 M16 X 170	1
12	50282599	NUT M16	2

FIG. 120 - BOOM

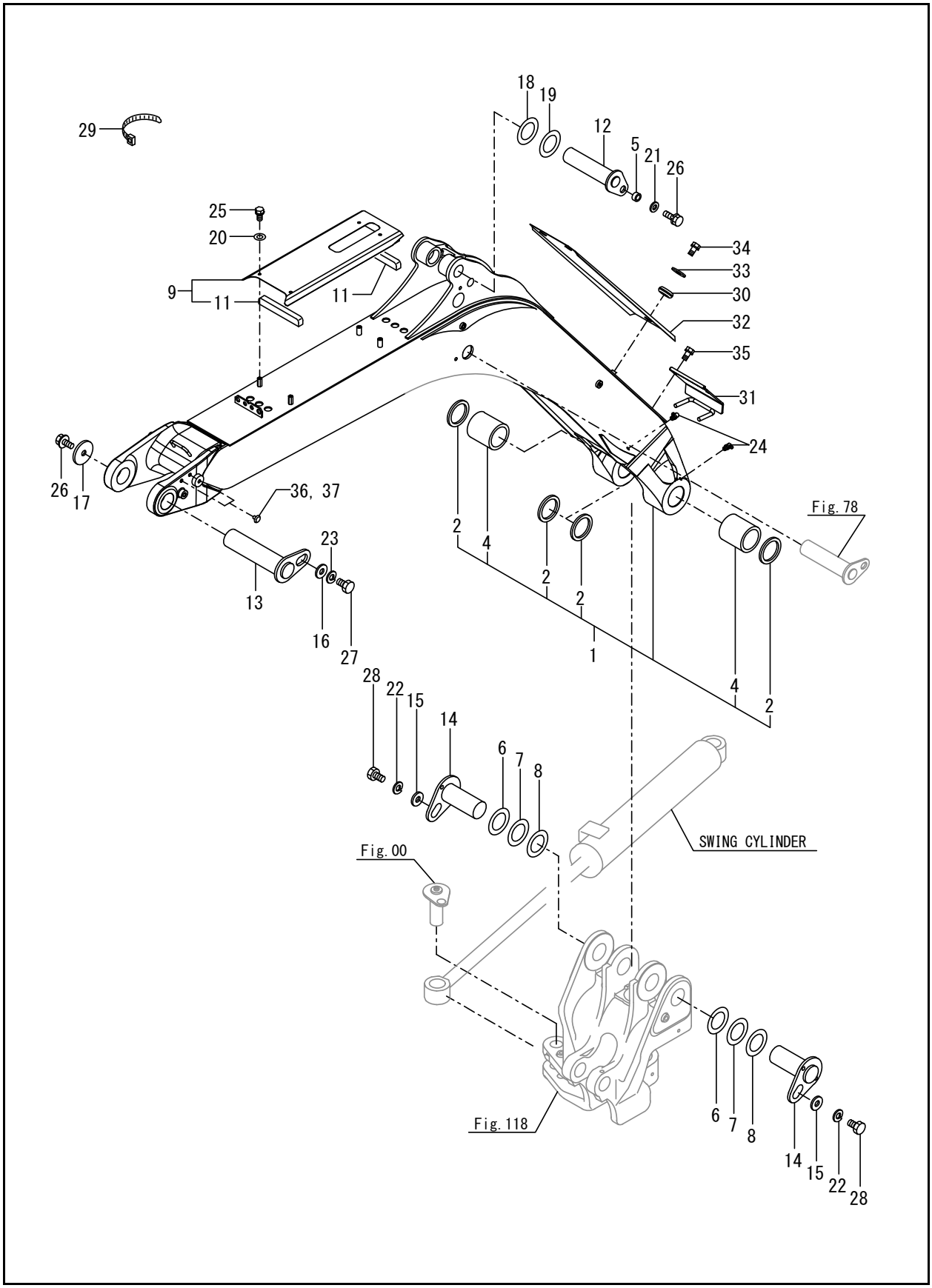
29
18
19
12
5
21
26
25
20
9
11
11
34
33
30
32
35
31
24
26
17
36, 37
2
4
2
2
1
4
2
Fig. 78
23
13
16
27
28
22
15
14
6
7
8
SWING CYLINDER
Fig. 00
Fig. 118
6
7
8
14
15
22
28

Ref. No.	Part No.	Description	Qty.
1	50286373	BOOM ASSY (use with labels 38A, 38B, 38C, 38D)	1
2	50280749	SEAL 60 X 75 X 5	4
4	50283904	BUSHING 60X75	2
5	50280892	SPACER	2
6	50283183	SHIM	2
7	50283184	SHIM	2
8	50283185	SHIM	2
9	50286379	BOOM COVER	1
11	50286554	PAD	2
12	50283899	PIN 50 X 225 CMP	1
13	50283900	PIN ASSY, 60X255	1
14	50283903	PIN ASSY,60X142	2
15	50280991	WASHER	2
16	50280991	WASHER	1
17	50282752	WASHER	1
18	50280899	SHIM 50X90X0.5	2
19	50280900	SHIM 50X90X1.2	2
20	50282380	WASHER 8, POLISHED	4
21	50282388	WASHER 12	1
22	188712	SPRING/WASHER 14	2
23	188712	SPRING/WASHER 14	1
24	50282497	NIPPLE PT1/8,GREASE	2
25	50282507	BOLT W/WASHER M8X20	4
26	50284101	BOLT M12 X 25	3
27	50282566	BOLT M14X 25 PLATED	1
28	50282567	BOLT M14X 35 PLATED	2
29	50282352	BAND	1
30	50282720	GROMMET 16	3
31	50286299	HOSE GUIDE	1
32	50286377	BOOM COVER ASSY	1
33	186593	WASHER 8	3
34	50282506	BOLT W/WASHER M8X16	3
35	50282519	BOLT M10X 40	2
36	50280920	TREE CLIP	4
37	50280920	TREE CLIP	2
38A	50281177	LABEL, SAND US (see Page 4, Page 6)	1
38B	50281178	LABEL, WARNING HITCH (see Page 4, Page 6)	1
38C	50281030	LABEL, STEERING US (see Page 4, Page 6)	1
38D	50282884	LABEL, BOOM US (see Page 4, Page 6)	2

FIG. 122 - ARM

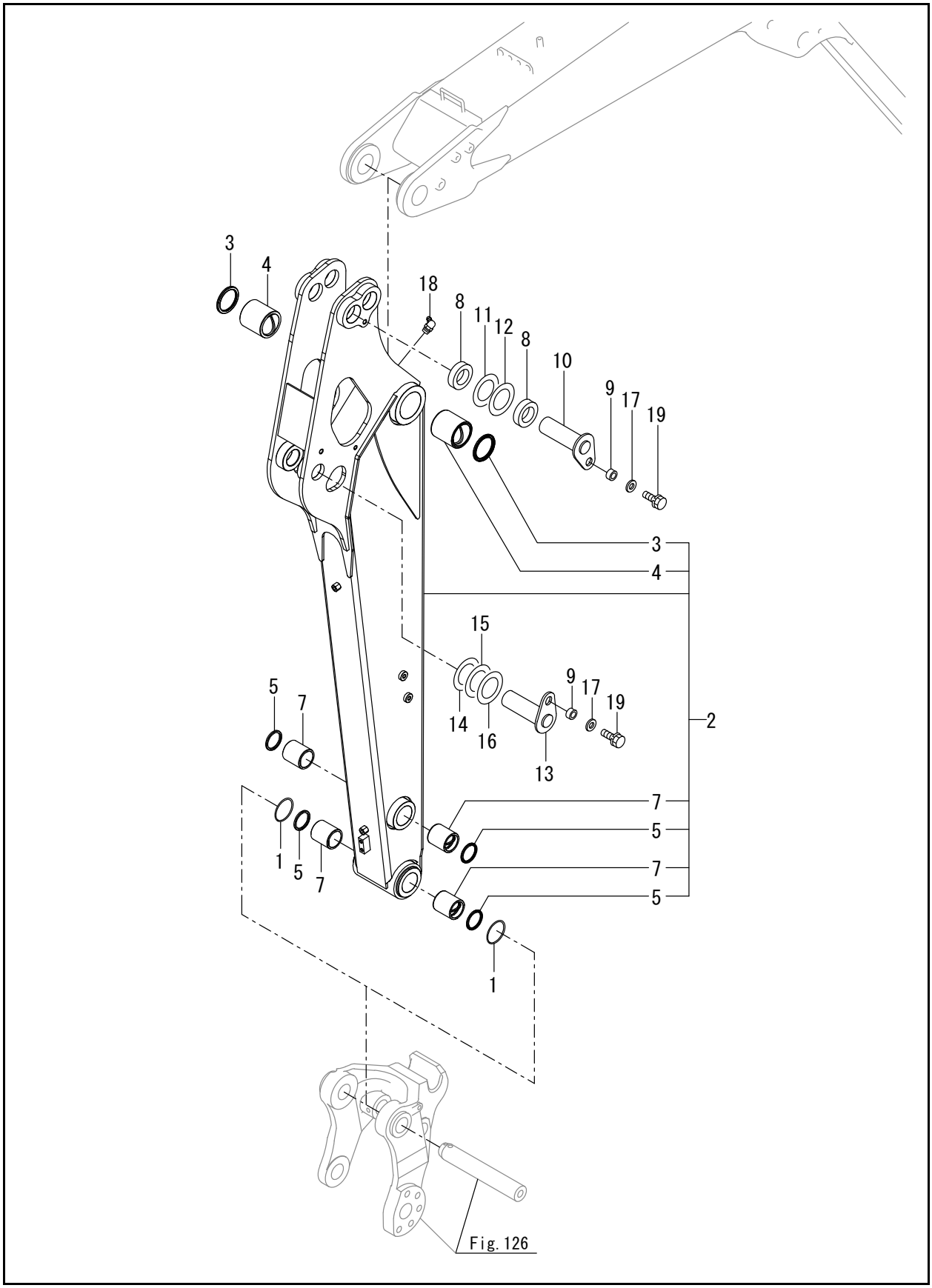

Fig. 126

Ref. No.	Part No.	Description	Qty.
1	50282718	O-RING 81X8	2
2	50286375	ARM ASSY (use with labels 20A, 20B)	1
3	50280749	SEAL 60 X 75 X 5	2
4	50282904	BUSHING 60X75	2
5	50282817	SEAL 45X55X4, DUST	4
7	50282687	BUSH, PIN	4
8	50283914	COLLAR	2
9	50280892	SPACER	2
10	50283262	PIN ASSY,50X186	1
11	50280899	SHIM 50X90X0.5	1
12	50280900	SHIM 50X90X1.2	1
13	50283198	PIN ASSY, 45X138	1
14	50282809	SHIM 45X1.2	1
15	50282810	SHIM 45X80X1.2	1
16	50282811	SHIM 45X80X1.6	1
17	50282388	WASHER 12	2
18	50282498	NIPPLE B,GREASE	1
19	50284101	BOLT M12 X 25	2
20A	50281176	LABEL, FINGER US (see Page 4, Page 6)	1
20B	50281181	LABEL,LOCK PIN(US) (see Page 4, Page 6)	1

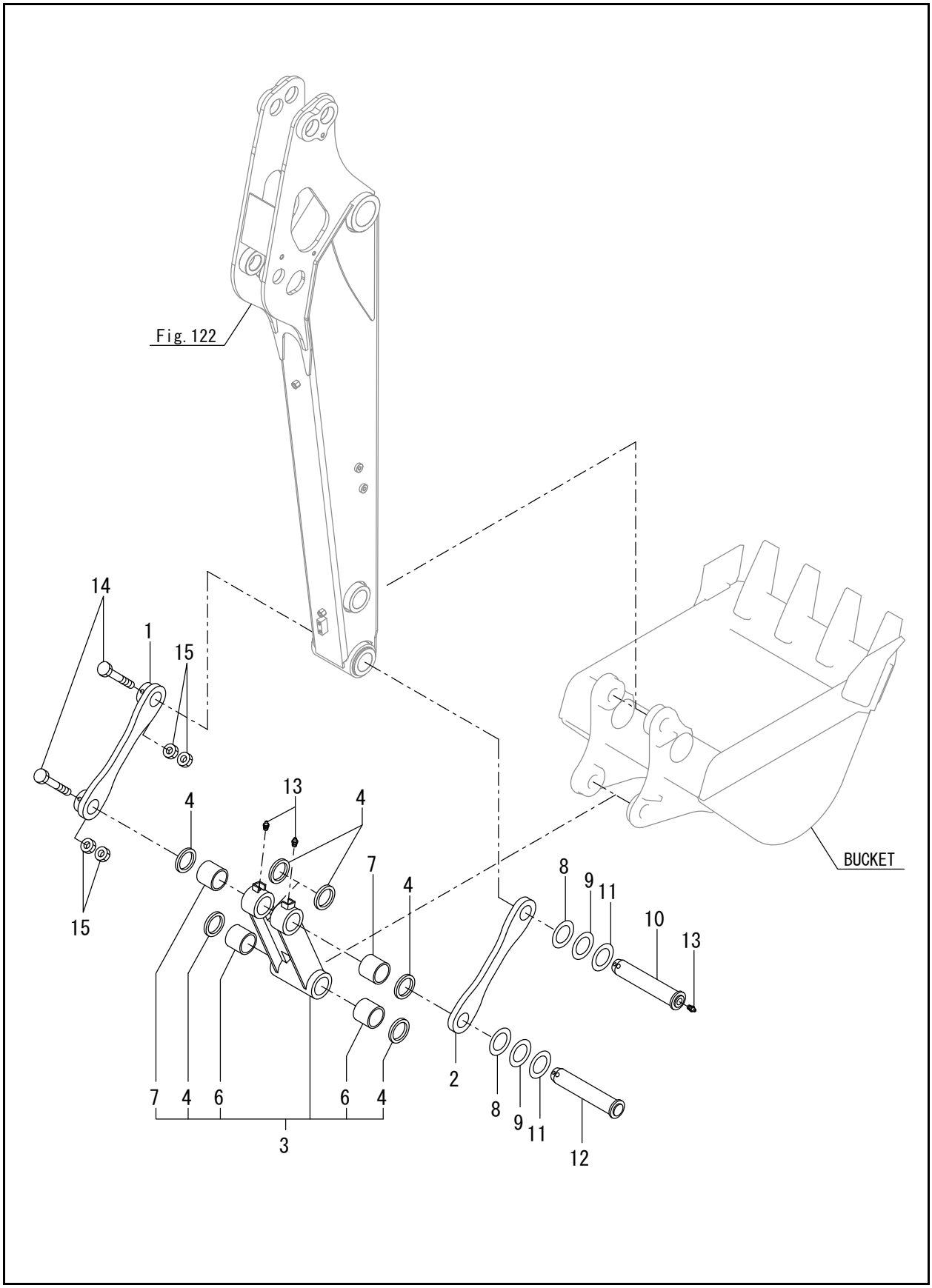
Fig. 122
BUCKET
14
1
15
15
4
13
4
7
4
8
9
11
10
13
2
8
9
11
12
7
4
6
6
4
3

FIG. 124 - BUCKET ARM & LINK

Ref. No.	Part No.	Description	Qty.
1	50286207	BUCKET ARM ASSY	1
2	50286209	BUCKET ARM	1
3	50286211	BUCKET LINK	1
4	50282817	SEAL 45X55X4, DUST	6
6	50282687	BUSH, PIN	2
7	50282688	BUSH, PIN	2
8	50282809	SHIM 45X1.2	2
9	50282810	SHIM 45X80X1.2	2
10	50283199	PIN 45 X 217 (A)	1
11	50282811	SHIM 45X80X1.6	2
12	50283200	PIN 45 X 217	1
13	50282497	NIPPLE PT1/8,GREASE	3
14	50284123	BOLT M10 X 80 PLATED	2
15	50282597	NUT 10	4

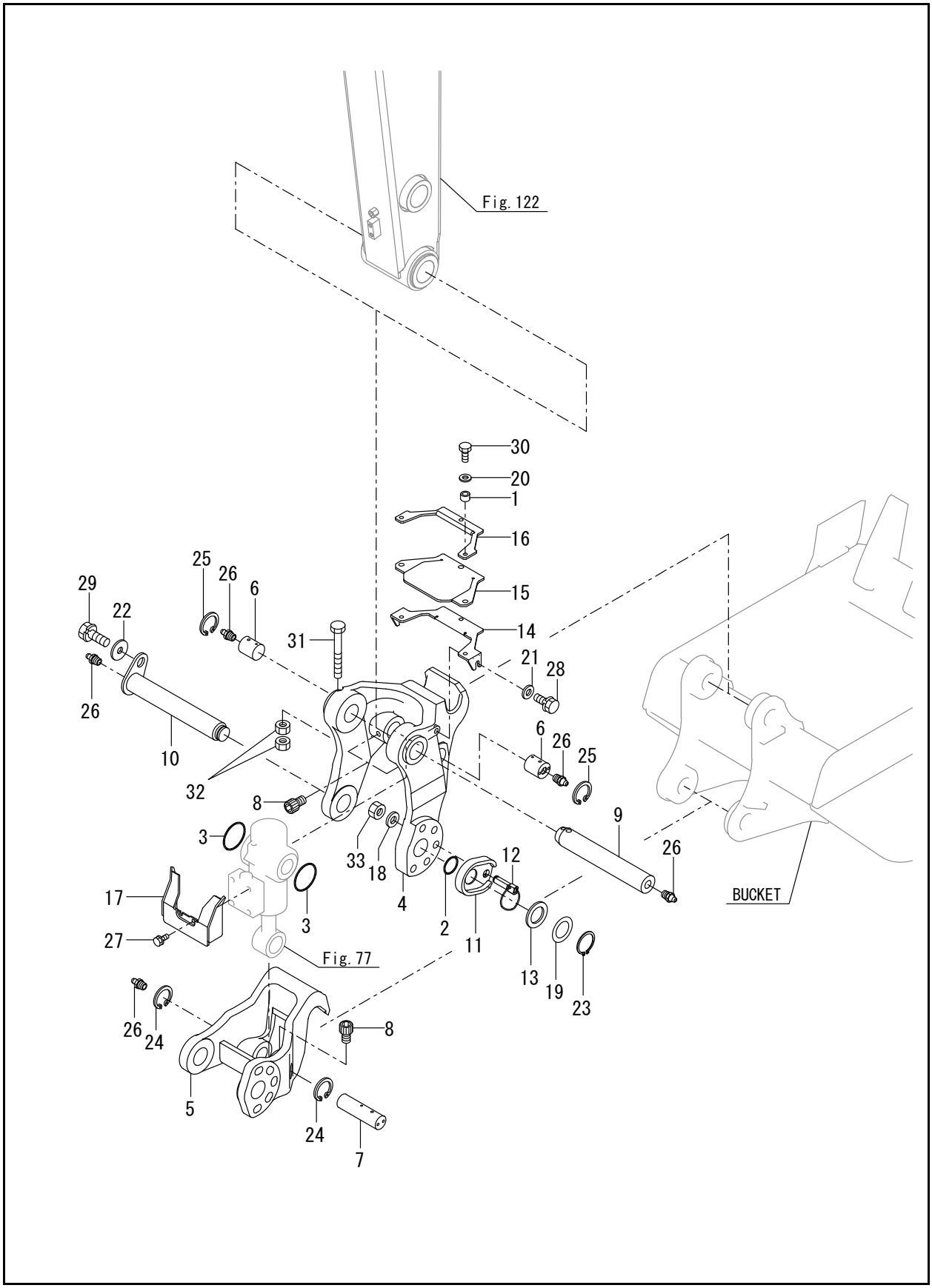
Fig. 122
30
20
1
16
15
14
21
28
25
26
6
29
22
31
26
10
32
8
3
33
18
4
2
12
11
13
19
23
9
26
BUCKET
6
26
25
17
27
3
Fig. 77
26
24
8
5
24
7

Ref. No.	Part No.	Description	Qty.
1	50281363	COLLER 9X4	3
2	50280793	O-RING 27X5.7	1
3	50282818	O-RING	2
4	50286239	BRACKET	1
5	50286241	BRACKET	1
6	50283306	PIN, 40X45.5	2
7	50283307	PIN, 35X166	1
8	50283280	BOLT	3
9	50283308	PIN, 45X261	1
10	50283309	PIN 45 X 299	1
11	50286227	LOCK PLATE	1
12	50283311	PIN ASSY, LOCK	1
13	50281378	COLLAR 35.5X55X1.2	1
14	50286243	GUARD ASSY	1
15	50283313	PLATE, RUBBER	1
16	50286245	PLATE ASSY	1
17	50286247	COVER ASSY	1
18	50283282	WASHER 6.4X15.5X1.5	1
19	50282733	SHIM 35	1
20	50282380	WASHER 8, POLISHED	3
21	138111	WASHER/POLISHED	2
22	50282388	WASHER 12	1
23	50282400	CIRCLIP 35	1
24	50282406	CIRCLIP 35	2
25	50284048	CIRCLIP 40(H)	2
26	50282497	NIPPLE PT1/8,GREASE	5
27	50282506	BOLT W/WASHER M8X16	2
28	50282515	BOLT W/WASHER M10X20	2
29	50282525	BOLT W/WASHER M12X30	1
30	50282562	BOLT M 8X 20 PLATED	3
31	50284123	BOLT M10 X 80 PLATED	1
32	50282597	NUT 10	2
33	425-34984	LOCK NUT M6 PLATED	1

FIG. 128 - BLADE

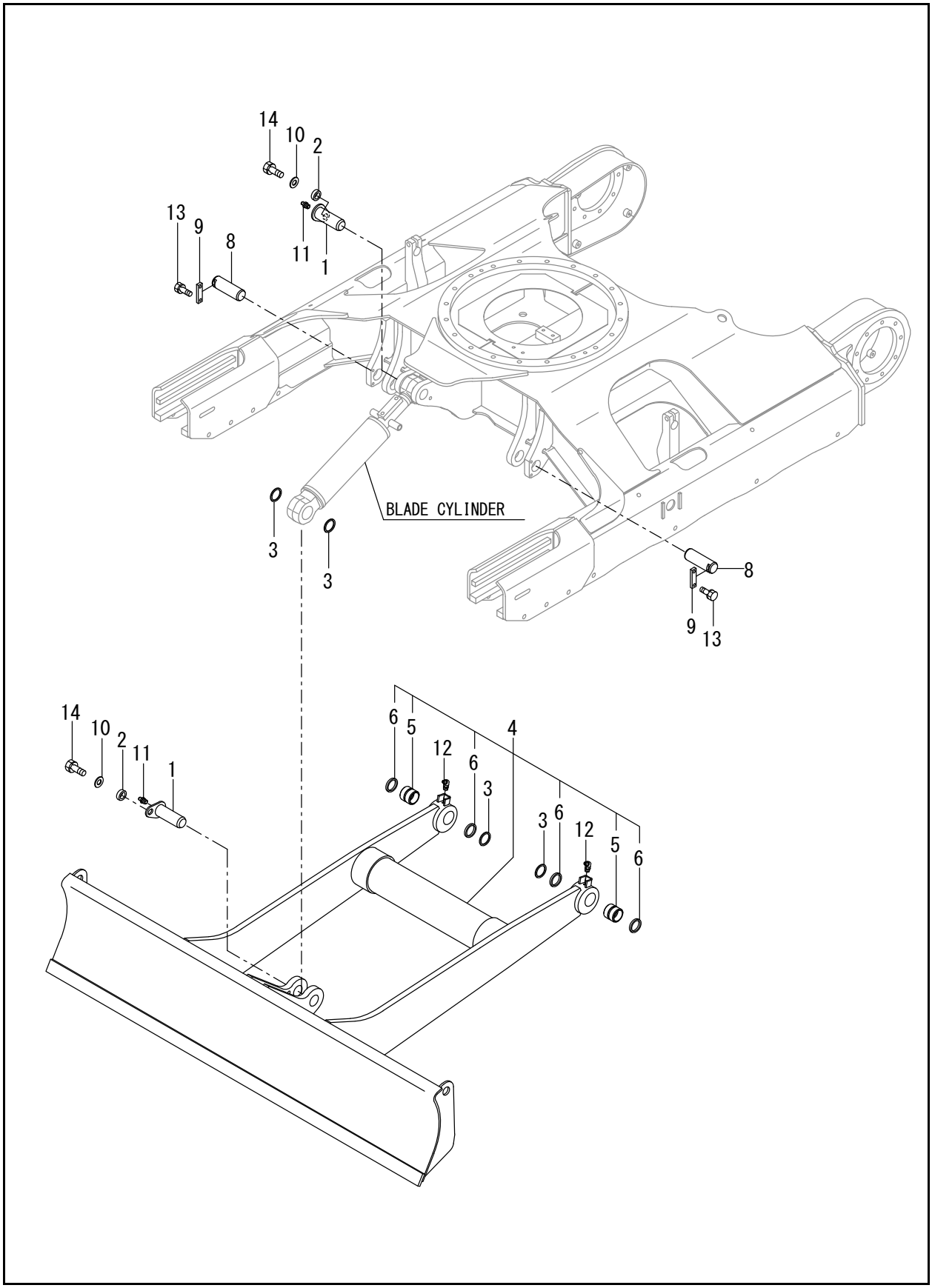

Ref. No.	Part No.	Description	Qty.
1	50282791	PIN ASSY, 45X122	2
2	50280892	SPACER	2
3	50282689	SHIM 45X1	4
4	50283326	BLADE ASSY	1
5	50282764	BUSHING 45 50	2
6	50282817	SEAL 45X55X4, DUST	4
8	50282873	PIN 45 X 120	2
9	50282717	PLATE, LOCK	2
10	50282388	WASHER 12	2
11	50282497	NIPPLE PT1/8,GREASE	2
12	50282498	NIPPLE B,GREASE	2
13	50282516	BOLT W/WASHER M10X25	4
14	50282525	BOLT W/WASHER M12X30	2

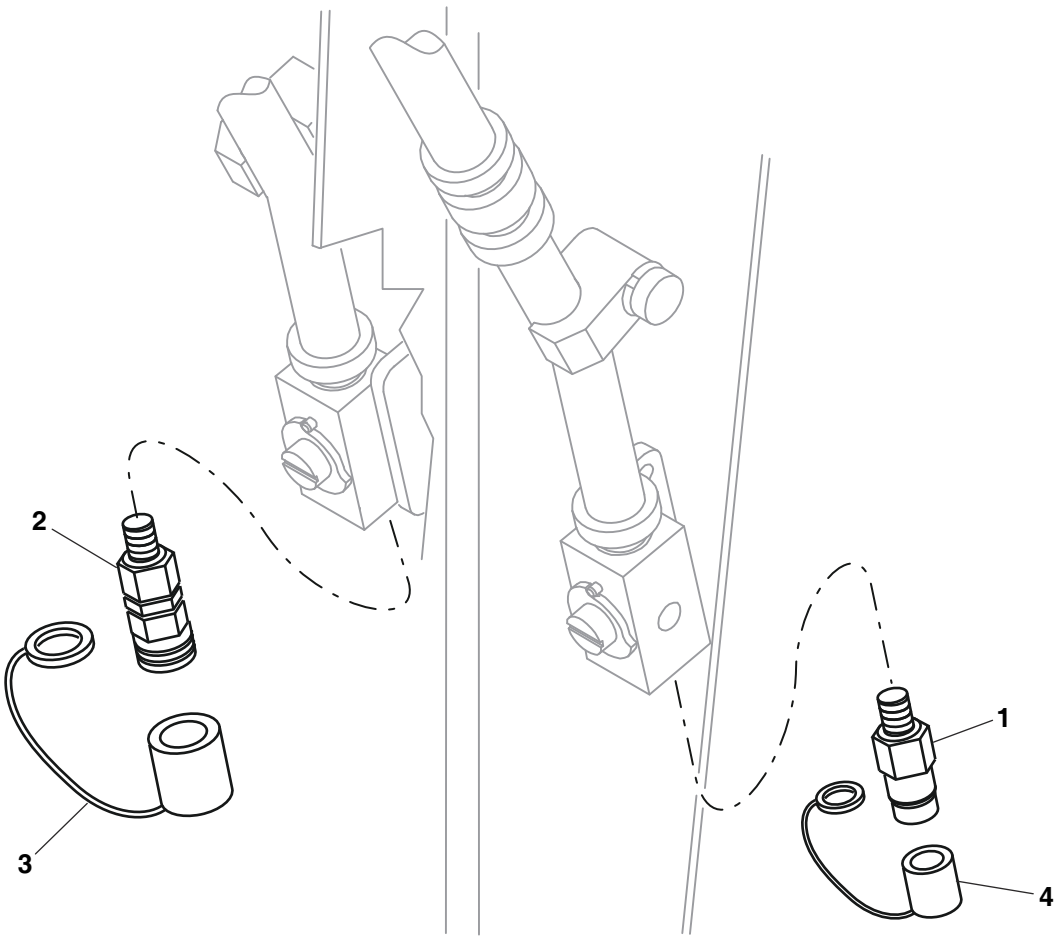
2
3
1
4

Ref. No.	Part No.	Description	Qty.
1	50300958	COUPLER/MALE BSPT08	1
2	50300968	COUPLER/FEMALE BSPT08	1
3	271084	COVER/DUST FEMALE 08	1
4	271083	COVER/DUST MALE 08	1

NOTE: See Page 204 for related components.

NOTES

Index

C

Compact Excavator 1

F

Figure Index (1) - Main Parts 2
Figure Index (2) - Hydraulic Section 3
Fig. 1 - Label (Canopy) 4
Fig. 2 - Label (Cabin) 6
Fig. 5 - Safety Label (Canopy) 8
Fig. 6 - Safety Label (Cabin) 10
Fig. 7 - Silencer & Air Cleaner 12
Fig. 8 - Accelerator 14
Fig. 9 - Engine Mount 16
Fig. 10 - Radiator & Mount 18
Fig. 11 - Fuel Tank 20
Fig. 12 - Fuel Line 22
Fig. 13 - Battery 24
Fig. 14 - Electric Part (Around Engine) 26
Fig. 15 - Electric Part (Around Frame) 28
Fig. 16 - Electric Part (Equipment) 30
Fig. 17 - Electric Part (Starting Switch) 32
Fig. 18 - Electric Part (Quick Coupler Switch Box) 34
Fig. 19 - Electric Part (Work Lamp) 36
Fig. 21 - Travel Alarm 38
Fig. 22 - Window Washer 40
Fig. 23 - Heater 42
Fig. 24 - Air Conditioner (Electric Part) ... 44
Fig. 25 - Air Conditioner (Heater Hose) ... 46
Fig. 26 - Air Conditioner (Engine Related) 48
Fig. 27 - Air Conditioner (Cabin Related) 50
Fig. 28 - Air Conditioner (Condenser Related) 52
Fig. 29 - Air Conditioner (Piping) 54
Fig. 30 - Sprocket 56
Fig. 31 - Idler & Adjust 58
Fig. 32 - Track Roller 60
Fig. 33 - Carrier Roller 62
Fig. 34 - Crawler 64
Fig. 35 - Valve Plate 66
Fig. 36 - Control Equipment (Travel Lever) 68
Fig. 37 - Control Equipment (Swing Pedal) 70
Fig. 38 - Control Equipment (Low-High Pedal) 72
Fig. 39 - Control Equipment (Lock Lever & Stand Left) 74
Fig. 40 - Control Equipment (Lock Lever & Stand Right) 76
Fig. 41 - Control Equipment (Blade Lever) 78
Fig. 42 - Control Equipment (P.T.O.) 80
Fig. 43 - Arm Rest 82
Fig. 44 - Travel Frame 84
Fig. 45 - Turning Frame 86
Fig. 46 - Greasing 88
Fig. 47 - Turning Bearing 90
Fig. 48 - Frame Guard 92
Fig. 50 - Cover (Turning Frame) 94
Fig. 51 - Cover (Travel Frame) 96
Fig. 52 - Cover (Bonnet) 98
Fig. 53 - Step (1) 100
Fig. 54 - Step (2) 102
Fig. 55 - Instrument Panel 104
Fig. 56 - Seat Mount 108
Fig. 57 - Seat Mount Cover & Hand Hold 110
Fig. 58 - Seat Plate 112
Fig. 59 - Bonnet (Rear) 114
Fig. 61 - Bonnet (Front) 116
Fig. 62 - Bonnet (Left) 118
Fig. 64 - Bonnet (Right) 120
Fig. 66 - Canopy 122
Fig. 68 - Cabin (Body) 124
Fig. 69 - Cabin (Glass) 126
Fig. 70 - Cabin (Accessory) 128
Fig. 71 - Cabin (Electric Part) 130
Fig. 72 - Cabin Door (Front) 132
Fig. 73 - Cabin Door (Rear) 134
Fig. 74 - Cabin (Cover) 136
Fig. 75 - Cabin (Fitting) 138
Fig. 76 - Rearview Mirror 140
Fig. 77 - Hyd. Oil Pump & Joint 142
Fig. 78 - Boom Cylinder 144
Fig. 79 - Arm Cylinder 146
Fig. 80 - Bucket Cylinder 148
Fig. 81 - Swing Cylinder 150
Fig. 82 - Blade Cylinder 152
Fig. 83 - Hitch Cylinder (Quick Coupler) 154
Fig. 84 - Travel Motor 156

Index

Fig. 85 - Turning Motor 158
Fig. 86 - Swivel Joint 160
Fig. 87 - Control Valve (1/7) 162
Fig. 88 - Control Valve (2/7) 164
Fig. 89 - Control Valve (3/7) 166
Fig. 90 - Control Valve (4/7) 168
Fig. 91 - Control Valve (5/7) 170
Fig. 92 - Control Valve (6/7) 172
Fig. 93 - Control Valve (7/7) 174
Fig. 94 - 2-Way Valve 176
Fig. 95 - Remote Control Valve 178
Fig. 96 - Hyd. Oil Tank 180
Fig. 97 - Hyd. Oil Piping (Fitting Pump) 182
Fig. 98 - Hyd. Oil Piping (Fitting Turning Motor) 184
Fig. 99 - Hyd. Oil Piping (Fitting Control Valve) 186
Fig. 100 - Hyd. Oil Piping (Tank-Pump-Control Valve) 188
Fig. 101 - Hyd. Oil Piping (Valve-Turning Motor) 190
Fig. 102 - Hyd. Oil Piping (Valve-Swivel-Swing Cylinder) 192
Fig. 103 - Hyd. Oil Piping (Return) 194
Fig. 104 - Hyd. Oil Piping (P.T.O. Turning Frame) 196
Fig. 105 - Hyd. Oil Piping (Control Valve-Frame End) 198
Fig. 106 - Hyd. Oil Piping (Truck Frame) 200
Fig. 107 - Hyd. Oil Piping (Boom) 202
Fig. 108 - Hyd. Oil Piping (P.T.O. Boom-Arm) 204
Fig. 110 - Hyd. Oil Piping (Quick Coupler) 206
Fig. 112 - Control Piping (Pump-Valve-Return) 208
Fig. 113 - Control Piping (2-Way Valve 1) 210
Fig. 114 - Control Piping (2-Way Valve 2) 212
Fig. 115 - Control Piping (Valve-Blade Valve) 214
Fig. 116 - Control Piping (2-Way Valve Fitting) 216
Fig. 117 - Accumulator 218
Fig. 118 - Boom Bracket 220
Fig. 120 - Boom 222
Fig. 122 - Arm 224
Fig. 124 - Bucket Arm & Link 226
Fig. 126 - Quick Coupler 228
Fig. 128 - Blade 230

H

Hydraulic Quick-Connect Couplers 232

I

Introduction i

S

Seat 106
Special Tools, Paint 1

T

Table of Contents I

Part No.	Page No.	Ref. No.
138089	31	18
138111	27	17
138111	37	7
138111	71	17
138111	75	15
138111	81	9
138111	87	13
138111	99	22
138111	103	7
138111	109	32
138111	123	8
138111	129	19
138111	145	37
138111	145	61
138111	149	34
138111	205	19
138111	229	21
138135	67	18
138143	27	26
138143	41	12
138143	49	30
138515	69	19
138515	71	15
138515	71	16
138515	177	12
167754	1	20
167755	1	22
167788	1	19
167789	1	21
176152	75	16
183935	5	6
183935	7	9
184305	5	7
184305	7	10
184467	1	1
184472	1	3
184473	1	4
184474	1	5
184475	1	6
186340	23	13
186341	31	14
186359	19	36
186361	19	38
186461	19	37
186470	19	7
186483	27	11
186593	53	21
186593	71	18
186593	223	33
186610	161	14
186610	221	7
186619	95	7
186619	95	8
186619	95	9
186619	95	10
186626	75	23
186626	77	8
188712	21	26
188712	57	3
188712	157	68
188712	181	34
188712	223	22
188712	223	23
188723	21	14
195348	1	10
197782	69	18
197787	137	18
197795	165	30
197813	167	11
197813	169	11
197813	169	24
197813	197	10
197868	5	54
197868	7	57
203047	107	1E
270811	1	13
271083	233	4
271084	233	3
272806	1	11
272809	1	12
272812	1	14
272813	1	15
272814	1	16
272815	1	17
272816	1	18
50280727	13	9
50280728	19	10
50280729	19	41
50280735	27	14
50280743	19	34
50280749	223	2
50280749	225	3
50280782	99	29
50280782	111	3
50280782	147	58
50280783	59	21
50280784	21	19
50280786	157	8
50280791	203	9
50280792	187	2
50280792	197	11
50280792	209	1
50280792	211	1
50280792	215	1
50280792	217	1
50280792	219	4
50280793	69	15
50280793	71	10
50280793	75	5
50280793	229	2
50280794	115	15
50280795	157	18
50280797	5	35
50280797	7	38
50280797	9	11
50280797	11	12
50280797	13	21B
50280798	19	17
50280798	25	8
50280798	31	1

Part No.	Page No.	Ref. No.
50280798	43	1
50280798	47	1
50280798	55	1
50280799	37	1
50280799	131	25
50280802	23	10
50280802	45	1
50280802	45	2
50280803	17	15
50280803	49	15
50280804	35	18
50280805	93	3
50280806	39	8
50280810	67	3
50280810	69	6
50280810	69	9
50280810	75	3
50280813	39	13
50280813	151	25
50280813	183	3
50280813	187	6
50280813	193	3
50280813	197	13
50280813	207	6
50280813	217	2
50280814	147	42
50280823	145	35
50280823	147	40
50280823	149	32
50280823	185	4
50280823	193	5
50280823	201	8
50280824	197	17
50280828	157	10
50280828	157	11
50280835	183	5
50280836	143	4
50280836	157	25
50280838	147	14
50280838	147	18
50280846	5	34
50280846	7	37
50280849	177	5
50280851	17	9
50280853	17	10
50280854	21	3
50280857	53	3
50280863	97	3
50280865	133	22
50280875	217	4
50280876	217	7
50280887	25	12
50280889	99	15
50280889	115	16
50280889	133	6
50280890	215	5
50280892	223	5
50280892	225	9
50280892	231	2
50280894	75	12
50280898	197	22
50280899	145	49
50280899	223	18
50280899	225	11
50280900	145	50
50280900	223	19
50280900	225	12
50280903	197	21
50280905	185	2
50280905	201	1
50280905	207	1
50280906	31	4
50280915	221	1
50280916	221	2
50280917	5	3
50280917	7	3
50280920	223	36
50280920	223	37
50280923	197	24
50280929	33	3
50280930	33	4
50280931	33	5
50280932	33	1
50280933	31	5
50280939	69	13
50280940	69	14
50280943	87	2
50280945	99	1
50280945	109	19
50280948	35	20
50280948	109	27
50280969	181	10
50280991	223	15
50280991	223	16
50281010	147	28
50281011	147	29
50281012	157	31
50281016	43	8
50281016	47	6
50281018	5	37
50281018	7	40
50281018	9	12
50281018	11	13
50281019	5	38
50281019	7	41
50281019	9	13
50281019	11	14
50281019	109	45B
50281020	5	39
50281020	7	42
50281020	9	14
50281020	11	15
50281020	123	14B
50281020	127	48C
50281021	5	40
50281021	7	43
50281021	9	15
50281021	11	16
50281021	25	16A
50281022	5	41

Part No.	Page No.	Ref. No.
50281022	7	44
50281022	9	16
50281022	11	17
50281022	123	14C
50281022	137	23A
50281023	5	42
50281023	7	45
50281023	9	17
50281023	11	18
50281023	93	12A
50281023	93	12B
50281024	5	43
50281024	7	46
50281024	9	18
50281024	11	19
50281024	119	9A
50281025	5	44
50281025	7	47
50281025	9	19
50281025	11	20
50281025	123	14D
50281025	127	48D
50281026	5	45
50281026	7	48
50281026	9	20
50281026	11	21
50281026	115	24B
50281027	5	46
50281027	7	49
50281027	9	21
50281027	11	22
50281027	19	64B
50281028	5	47
50281028	7	50
50281028	9	22
50281028	11	23
50281028	115	24C
50281029	5	48
50281029	7	51
50281029	9	23
50281029	11	24
50281029	13	21A
50281030	5	49
50281030	7	52
50281030	9	24
50281030	11	25
50281030	223	38C
50281031	5	50
50281031	7	53
50281031	9	25
50281031	11	26
50281031	123	14E
50281031	125	32A
50281032	5	51
50281032	7	54
50281032	9	26
50281032	11	27
50281032	123	14F
50281032	125	32B
50281033	5	53
50281033	7	56
50281033	9	28
50281033	11	29
50281033	109	45C
50281034	5	31
50281034	7	34
50281035	5	32
50281035	7	35
50281036	7	6
50281036	11	3
50281036	127	48A
50281037	5	60
50281037	7	63
50281037	177	1
50281038	5	61
50281038	7	64
50281038	177	2
50281039	5	62
50281039	7	65
50281039	177	3
50281040	177	8
50281041	177	9
50281043	83	1
50281044	179	3
50281044	179	16
50281045	179	4
50281045	179	17
50281046	19	8
50281047	19	9
50281049	109	2
50281051	99	19
50281051	115	10
50281056	109	1
50281059	51	1
50281059	53	1
50281061	145	7
50281061	145	12
50281061	147	12
50281061	147	16
50281066	57	1
50281066	157	1
50281071	75	11
50281072	87	4
50281073	27	12
50281073	205	28
50281103	181	13
50281104	181	14
50281105	197	12
50281106	209	2
50281128	39	6
50281130	5	14
50281130	7	17
50281132	37	4
50281132	131	14
50281136	85	3
50281141	115	1
50281142	115	2
50281143	115	11
50281146	159	48
50281147	5	29

Part No.	Page No.	Ref. No.
50281147	7	32
50281149	5	28
50281149	7	31
50281150	179	6
50281150	179	20
50281151	179	7
50281151	179	21
50281152	179	8
50281152	179	22
50281153	179	9
50281153	179	23
50281154	179	10
50281154	179	24
50281172	5	2
50281172	7	2
50281172	9	1
50281172	11	1
50281172	109	45D
50281173	5	13
50281173	7	16
50281174	5	15
50281174	7	18
50281174	9	3
50281174	11	4
50281174	109	45A
50281174	127	48B
50281175	5	16
50281175	7	19
50281176	5	17
50281176	7	20
50281176	9	4
50281176	11	5
50281176	225	20A
50281177	5	18
50281177	7	21
50281177	9	5
50281177	11	6
50281177	223	38A
50281178	5	19
50281178	7	22
50281178	9	6
50281178	11	7
50281178	223	38B
50281179	5	55
50281179	7	58
50281179	35	2
50281181	5	21
50281181	7	24
50281181	9	7
50281181	11	8
50281181	225	20B
50281182	39	4
50281200	219	2
50281201	219	3
50281206	219	5
50281227	51	2
50281317	39	5
50281318	53	17
50281318	53	18
50281318	83	4
50281318	83	5
50281318	105	7
50281318	125	6
50281318	135	2
50281346	27	5
50281346	45	5
50281350	145	34
50281350	185	1
50281350	187	1
50281351	115	12
50281352	197	20
50281361	5	10
50281361	7	13
50281362	35	1
50281363	229	1
50281364	35	7
50281365	35	8
50281366	35	9
50281367	35	10
50281368	35	11
50281369	35	12
50281370	35	13
50281371	35	14
50281372	35	15
50281373	35	19
50281374	155	14
50281375	155	15
50281377	207	8
50281378	229	13
50281407	5	11
50281407	7	14
50281414	141	2
50281425	5	4
50281425	7	5
50281425	9	2
50281425	11	2
50281425	115	24A
50281427	177	10
50281428	177	11
50281458	5	25
50281458	7	28
50281458	9	9
50281458	11	10
50281458	19	64C
50281459	5	26
50281459	7	29
50281459	9	10
50281459	11	11
50281459	19	64A
50281469	79	4
50281470	79	5
50281471	79	6
50281472	79	7
50281473	79	8
50281474	79	9
50281475	79	10
50281476	79	11
50281477	79	12
50281478	79	13
50281479	79	14

Part No.	Page No.	Ref. No.
50281480	79	15
50281481	79	17
50281482	79	18
50281483	79	19
50281484	79	20
50281485	79	21
50281486	79	22
50281488	215	4
50281489	187	8
50281490	185	6
50281490	187	11
50281493	89	2
50281493	89	5
50281498	5	33
50281498	7	36
50281499	31	10
50281653	75	8
50282078	105	1
50282079	75	1
50282079	77	2
50282080	21	5
50282081	179	1
50282081	179	14
50282346	19	42
50282349	23	11
50282351	29	4
50282352	29	3
50282352	31	12
50282352	39	7
50282352	191	3
50282352	223	29
50282353	75	13
50282353	77	5
50282355	59	9
50282360	93	2
50282361	99	18
50282361	103	2
50282361	103	11
50282362	137	10
50282365	19	48
50282371	53	6
50282372	53	7
50282377	125	25
50282378	125	26
50282378	127	26
50282378	143	54
50282379	15	12
50282379	23	22
50282379	27	15
50282379	27	16
50282379	31	19
50282379	41	9
50282379	41	14
50282379	53	20
50282379	55	24
50282379	127	27
50282379	179	11
50282379	179	25
50282380	19	52
50282380	25	13
50282380	41	15
50282380	75	14
50282380	99	21
50282380	115	17
50282380	131	18
50282380	135	19
50282380	177	23
50282380	219	7
50282380	223	20
50282380	229	20
50282382	17	16
50282384	177	13
50282387	67	12
50282387	69	20
50282387	115	18
50282387	117	6
50282387	119	6
50282388	97	4
50282388	151	36
50282388	223	21
50282388	225	17
50282388	229	22
50282388	231	10
50282389	21	25
50282389	109	33
50282392	23	23
50282392	49	19
50282392	177	24
50282393	17	17
50282393	27	19
50282393	49	20
50282393	145	51
50282393	145	52
50282393	147	52
50282393	147	53
50282393	149	43
50282393	149	44
50282393	151	42
50282393	161	15
50282396	17	18
50282396	17	19
50282396	61	14
50282396	63	11
50282396	85	6
50282396	87	14
50282396	109	34
50282396	123	10
50282396	139	17
50282398	197	2
50282399	197	3
50282400	59	10
50282400	229	23
50282404	221	9
50282406	229	24
50282412	35	16
50282413	75	17
50282414	75	18
50282415	19	53
50282417	135	20
50282417	177	15

Part No.	Page No.	Ref. No.
50282418	71	19
50282418	75	19
50282418	81	10
50282418	99	23
50282418	115	19
50282418	115	20
50282421	177	16
50282422	105	8
50282426	197	36
50282427	43	21
50282427	47	11
50282428	195	3
50282428	195	6
50282428	195	15
50282428	197	37
50282430	19	54
50282431	19	55
50282436	19	39
50282437	21	12
50282438	195	16
50282438	217	8
50282443	197	38
50282446	155	25
50282447	153	18
50282447	177	17
50282447	181	21
50282460	177	18
50282462	181	24
50282467	157	57
50282468	39	11
50282468	157	58
50282468	165	31
50282468	167	28
50282468	173	30
50282469	157	59
50282469	165	32
50282469	165	40
50282470	39	9
50282470	157	41
50282470	159	39
50282470	163	13
50282470	163	30
50282470	165	11
50282470	165	33
50282470	167	10
50282470	169	10
50282470	169	23
50282470	171	11
50282470	171	24
50282470	173	10
50282470	173	31
50282470	175	11
50282470	197	25
50282470	207	5
50282470	215	3
50282471	59	26
50282471	145	36
50282471	147	41
50282471	149	33
50282471	157	61
50282471	159	43
50282471	163	14
50282471	165	34
50282471	171	25
50282471	185	5
50282471	193	6
50282471	201	7
50282471	201	9
50282474	147	44
50282474	159	26
50282474	159	28
50282474	159	40
50282474	159	44
50282474	165	35
50282476	197	4
50282477	197	23
50282478	197	5
50282480	61	11
50282480	157	62
50282493	181	26
50282497	59	27
50282497	69	21
50282497	71	22
50282497	89	3
50282497	145	38
50282497	221	10
50282497	223	24
50282497	227	13
50282497	229	26
50282497	231	11
50282498	145	39
50282498	147	46
50282498	149	35
50282498	225	18
50282498	231	12
50282499	75	20
50282499	147	47
50282499	149	36
50282499	151	28
50282500	41	16
50282501	21	27
50282501	27	20
50282501	29	5
50282501	31	20
50282501	31	21
50282501	39	21
50282501	45	13
50282502	23	25
50282502	27	21
50282502	27	22
50282502	31	22
50282502	133	33
50282502	179	12
50282502	179	26
50282505	19	56
50282505	21	28
50282505	27	23
50282505	39	22
50282505	99	16
50282506	35	21

Part No.	Page No.	Ref. No.
50282506	43	22
50282506	45	14
50282506	47	12
50282506	49	23
50282506	53	23
50282506	71	23
50282506	71	24
50282506	73	9
50282506	79	23
50282506	109	35
50282506	109	36
50282506	109	37
50282506	111	8
50282506	131	19
50282506	137	19
50282506	207	17
50282506	219	8
50282506	223	34
50282506	229	27
50282507	15	3
50282507	19	57
50282507	19	58
50282507	41	17
50282507	51	31
50282507	79	24
50282507	137	20
50282507	223	25
50282508	13	16
50282508	13	17
50282508	49	24
50282509	49	25
50282509	53	24
50282514	21	29
50282514	27	24
50282514	37	8
50282514	39	23
50282514	45	15
50282514	109	38
50282514	109	39
50282514	163	39
50282515	19	59
50282515	25	14
50282515	27	25
50282515	37	9
50282515	49	26
50282515	51	32
50282515	51	33
50282515	75	21
50282515	97	5
50282515	101	19
50282515	103	8
50282515	103	9
50282515	103	17
50282515	109	40
50282515	109	41
50282515	109	42
50282515	111	2
50282515	111	9
50282515	113	4
50282515	123	11
50282515	145	40
50282515	145	53
50282515	145	62
50282515	149	37
50282515	181	27
50282515	197	39
50282515	207	18
50282515	229	28
50282516	15	13
50282516	15	14
50282516	19	60
50282516	67	14
50282516	67	15
50282516	67	16
50282516	69	22
50282516	75	22
50282516	101	20
50282516	115	21
50282516	117	7
50282516	119	7
50282516	121	8
50282516	141	3
50282516	151	37
50282516	199	8
50282516	205	23
50282516	231	13
50282517	143	56
50282518	67	17
50282518	99	24
50282518	161	8
50282519	87	15
50282519	223	35
50282521	197	40
50282525	13	18
50282525	97	6
50282525	143	57
50282525	229	29
50282525	231	14
50282526	59	28
50282528	205	24
50282529	205	25
50282533	43	23
50282533	53	25
50282533	93	4
50282533	95	6
50282534	181	28
50282538	19	62
50282538	43	25
50282538	121	9
50282539	13	19
50282539	93	7
50282539	93	11
50282539	99	26
50282539	99	27
50282539	99	28
50282539	115	22
50282539	119	8
50282543	93	5
50282545	133	34
50282548	13	20

Part No.	Page No.	Ref. No.
50282548	51	35
50282548	53	26
50282548	69	23
50282548	71	25
50282548	71	26
50282552	17	20
50282552	123	13
50282558	85	4
50282562	131	20
50282562	229	30
50282566	223	27
50282567	21	30
50282567	181	35
50282567	223	28
50282569	85	7
50282570	87	16
50282573	63	12
50282576	99	17
50282576	115	23
50282581	177	21
50282582	155	26
50282587	159	35
50282592	43	26
50282592	43	27
50282592	43	28
50282592	69	25
50282596	25	15
50282596	49	31
50282596	163	35
50282597	67	21
50282597	69	26
50282597	125	30
50282597	129	17
50282597	133	36
50282597	133	37
50282597	227	15
50282597	229	32
50282599	63	13
50282599	221	12
50282604	31	7
50282606	31	9
50282607	39	14
50282607	151	27
50282607	163	40
50282607	181	30
50282607	183	4
50282607	183	7
50282607	185	3
50282607	185	7
50282607	187	7
50282607	187	9
50282607	187	12
50282607	187	14
50282607	193	2
50282607	193	4
50282607	197	14
50282607	197	41
50282607	201	2
50282607	201	4
50282607	207	2
50282607	207	7
50282607	209	3
50282607	211	2
50282607	215	6
50282607	217	3
50282607	217	5
50282607	217	9
50282607	219	9
50282608	145	41
50282608	185	9
50282608	185	10
50282608	187	15
50282608	197	42
50282608	201	11
50282609	183	2
50282609	183	8
50282609	187	16
50282609	201	12
50282610	197	19
50282610	197	43
50282616	33	7
50282617	145	58
50282617	147	56
50282617	149	47
50282617	151	44
50282619	201	13
50282620	145	59
50282620	147	57
50282620	149	48
50282620	151	45
50282621	61	12
50282621	63	10
50282673	21	10
50282675	31	13
50282675	45	12
50282677	27	13
50282677	31	15
50282680	13	8
50282682	13	7
50282687	225	7
50282687	227	6
50282688	227	7
50282689	231	3
50282690	15	8
50282691	181	17
50282692	187	13
50282693	21	18
50282696	57	2
50282697	59	13
50282698	59	14
50282699	59	15
50282700	59	16
50282701	59	17
50282702	69	16
50282702	71	12
50282703	91	2
50282704	143	5
50282705	157	9
50282706	157	34
50282707	157	13

Part No.	Page No.	Ref. No.
50282708	143	42
50282708	143	43
50282709	207	15
50282709	211	14
50282709	215	13
50282710	19	12
50282711	43	9
50282711	47	7
50282712	59	7
50282713	115	14
50282714	157	17
50282715	157	19
50282716	187	4
50282716	201	5
50282717	231	9
50282718	225	1
50282719	15	7
50282720	223	30
50282721	101	18
50282722	161	5
50282723	21	7
50282724	19	45
50282725	15	9
50282725	69	4
50282726	71	4
50282726	73	3
50282726	109	5
50282727	85	1
50282728	157	21
50282729	149	7
50282730	155	2
50282731	181	5
50282732	39	15
50282732	195	1
50282732	197	16
50282733	229	19
50282734	71	9
50282735	161	10
50282736	69	12
50282737	147	10
50282738	181	6
50282739	205	18
50282741	205	1
50282742	157	39
50282743	157	20
50282744	157	22
50282745	157	23
50282746	157	24
50282747	157	3
50282748	157	5
50282749	157	6
50282750	157	7
50282751	157	12
50282752	223	17
50282753	157	4
50282754	149	6
50282755	161	12
50282756	123	7
50282757	153	2
50282758	153	5
50282759	145	16
50282760	145	22
50282761	145	26
50282762	147	21
50282762	149	21
50282762	153	4
50282763	147	30
50282763	153	14
50282764	149	15
50282764	153	16
50282764	153	22
50282764	231	5
50282765	151	20
50282765	153	25
50282768	49	16
50282770	17	11
50282771	71	11
50282773	181	2
50282774	109	31
50282775	19	25
50282776	125	20
50282777	133	23
50282778	133	24
50282779	133	25
50282780	133	26
50282781	133	27
50282782	133	29
50282783	187	3
50282784	49	13
50282785	63	2
50282786	79	2
50282788	103	3
50282788	103	13
50282788	151	40
50282789	19	50
50282789	125	3
50282790	205	8
50282791	231	1
50282793	17	12
50282794	17	13
50282795	49	9
50282796	49	11
50282797	49	12
50282798	43	16
50282798	47	9
50282799	67	1
50282800	77	1
50282801	125	21
50282802	143	2
50282803	151	13
50282804	149	9
50282805	181	23
50282805	183	6
50282806	143	53
50282807	221	4
50282808	221	5
50282809	225	14
50282809	227	8
50282810	225	15
50282810	227	9

Part No.	Page No.	Ref. No.
50282811	225	16
50282811	227	11
50282812	151	33
50282813	151	34
50282814	151	35
50282815	143	1
50282816	187	5
50282817	149	11
50282817	149	16
50282817	153	19
50282817	153	23
50282817	225	5
50282817	227	4
50282817	231	6
50282818	229	3
50282819	163	25
50282819	167	18
50282820	193	1
50282820	201	3
50282821	181	3
50282822	181	4
50282823	137	12
50282824	137	13
50282825	143	26
50282826	143	45
50282827	143	46
50282828	143	47
50282829	143	48
50282830	143	49
50282831	143	50
50282832	143	51
50282833	143	52
50282836	21	6
50282837	23	9
50282838	203	3
50282840	165	17
50282840	173	19
50282842	39	16
50282843	105	2
50282844	105	9
50282845	105	3
50282846	105	4
50282847	131	23
50282848	125	1
50282849	143	14
50282849	157	66
50282850	197	15
50282852	61	3
50282854	61	6
50282856	61	9
50282857	61	5
50282858	65	27
50282859	85	5
50282860	153	15
50282861	153	24
50282862	157	27
50282863	157	28
50282864	157	29
50282865	157	30
50282866	157	32
50282867	157	33
50282868	157	14
50282869	157	15
50282870	157	44
50282871	157	53
50282872	157	64
50282873	231	8
50282874	159	3
50282875	159	6
50282876	159	17
50282877	159	19
50282878	159	10
50282879	159	11
50282880	159	12
50282881	159	20
50282883	5	36
50282883	7	39
50282884	5	52
50282884	7	55
50282884	9	27
50282884	11	28
50282884	223	38D
50282885	179	5
50282887	115	4
50282888	109	13
50282889	103	16
50282889	137	14
50282890	161	1
50282891	161	2
50282892	161	3
50282893	161	4
50282894	161	9
50282895	49	5
50282896	91	1
50282898	19	51
50282899	133	18
50282900	133	19
50282901	133	21
50282902	127	25
50282903	153	27
50282904	225	4
50282905	109	17
50282906	181	8
50282908	161	11
50282909	181	12
50282911	23	7
50282912	151	14
50282912	151	17
50282919	143	44
50282920	109	18
50282921	91	3
50282923	127	6
50282924	125	7
50282925	125	8
50282926	125	9
50282927	125	10
50282928	125	11
50282929	125	12
50282930	125	13
50282931	129	10

Part No.	Page No.	Ref. No.
50282932	127	34
50282933	127	35
50282934	127	41
50282935	131	7
50282936	131	8
50282937	131	9
50282938	131	11
50282938	131	12
50282939	131	10
50282940	131	13
50282941	135	7
50282942	133	15
50282943	135	8
50282944	135	9
50282945	135	10
50282946	133	17
50282947	131	16
50282948	131	17
50282949	133	28
50282950	5	27
50282950	7	30
50282952	7	7
50282953	21	8
50282955	27	4
50282956	123	1
50282957	131	1
50282958	131	2
50282959	131	3
50282960	131	4
50282961	131	5
50282962	37	3
50282964	43	6
50282965	47	8
50282966	61	2
50282967	73	7
50282968	93	9
50282969	121	1
50282970	101	6
50282971	125	2
50282972	47	10
50282972	211	3
50282973	127	2
50282973	133	3
50282974	127	3
50282975	129	1
50282976	127	4
50282976	129	2
50282977	127	33
50282978	129	3
50282979	127	5
50282980	129	4
50282981	133	4
50282982	129	5
50282982	133	5
50282983	129	6
50282984	129	7
50282985	129	8
50282986	129	9
50282987	109	44
50282987	137	11
50282988	133	11
50282989	135	3
50282990	135	4
50282991	135	5
50282991	135	6
50282992	133	12
50282993	127	7
50282994	127	8
50282995	127	9
50282996	127	10
50282997	127	11
50282998	127	12
50282999	127	13
50283000	133	13
50283001	127	14
50283002	127	15
50283003	127	36
50283004	125	14
50283005	127	16
50283006	127	37
50283007	127	17
50283008	127	38
50283009	127	18
50283010	127	39
50283011	127	19
50283012	125	15
50283013	125	16
50283014	125	17
50283015	125	19
50283016	129	11
50283018	137	15
50283019	137	16
50283020	129	12
50283021	133	14
50283022	133	16
50283023	129	13
50283024	129	14
50283025	129	15
50283026	129	16
50283027	127	40
50283028	127	42
50283029	127	43
50283030	131	15
50283031	133	20
50283032	133	30
50283033	135	11
50283034	135	12
50283035	135	13
50283036	135	14
50283037	135	15
50283038	125	22
50283039	125	23
50283040	133	31
50283041	133	32
50283042	135	16
50283043	125	24
50283044	135	17
50283045	135	18
50283046	147	23
50283047	147	24

Part No.	Page No.	Ref. No.
50283048	151	19
50283049	157	65
50283050	167	2
50283050	169	2
50283050	169	15
50283051	167	3
50283051	169	3
50283051	169	16
50283052	163	19
50283052	165	3
50283052	169	17
50283052	171	3
50283052	173	2
50283052	175	3
50283053	163	20
50283053	165	4
50283053	169	18
50283053	171	4
50283053	173	3
50283053	175	4
50283055	163	4
50283055	163	21
50283055	165	5
50283055	167	16
50283055	171	5
50283055	171	15
50283055	173	4
50283055	173	13
50283055	175	5
50283056	163	5
50283056	163	22
50283056	165	6
50283056	171	16
50283057	163	6
50283057	163	23
50283057	165	7
50283057	171	6
50283057	171	17
50283057	173	5
50283057	173	14
50283057	175	6
50283058	163	7
50283058	163	24
50283058	165	8
50283058	167	17
50283058	171	7
50283058	171	18
50283058	173	6
50283058	173	15
50283058	175	7
50283059	165	16
50283059	167	5
50283059	169	5
50283059	173	17
50283060	165	18
50283060	167	7
50283060	169	7
50283060	173	20
50283062	167	23
50283063	167	24
50283064	167	25
50283065	163	27
50283065	165	10
50283065	169	21
50283065	171	10
50283065	173	9
50283065	175	10
50283066	165	23
50283066	167	8
50283066	169	8
50283066	173	22
50283068	167	26
50283068	173	23
50283069	211	4
50283069	215	8
50283071	151	30
50283072	127	1
50283073	133	1
50283074	133	2
50283075	135	1
50283077	25	9
50283078	43	7
50283078	47	5
50283079	49	3
50283080	49	4
50283081	53	5
50283082	49	7
50283083	119	2
50283085	59	2
50283086	59	3
50283088	59	4
50283090	59	5
50283092	59	6
50283094	61	1
50283095	59	12
50283096	65	1
50283097	65	2
50283098	65	14
50283099	65	15
50283100	65	3
50283100	65	16
50283101	65	4
50283101	65	17
50283102	65	5
50283102	65	18
50283103	65	6
50283103	65	19
50283104	65	7
50283104	65	20
50283105	65	8
50283105	65	21
50283106	65	9
50283106	65	22
50283107	65	10
50283107	65	23
50283108	65	11
50283108	65	24
50283109	65	12
50283109	65	25
50283110	65	13

Part No.	Page No.	Ref. No.
50283110	65	26
50283113	97	1
50283115	97	2
50283116	99	2
50283117	151	2
50283118	151	9
50283118	153	11
50283119	145	13
50283120	151	12
50283121	151	21
50283122	151	24
50283123	147	39
50283124	151	39
50283125	143	6
50283126	143	10
50283127	143	11
50283128	143	13
50283129	143	16
50283130	143	18
50283131	143	7
50283132	143	19
50283133	143	8
50283134	143	20
50283135	143	21
50283137	143	22
50283138	143	23
50283139	143	25
50283140	143	27
50283141	157	2
50283142	143	28
50283143	143	29
50283144	143	30
50283145	143	31
50283146	143	32
50283147	143	33
50283148	143	34
50283149	143	9
50283150	143	35
50283152	143	41
50283153	157	16
50283154	157	35
50283155	157	36
50283156	157	37
50283157	157	45
50283158	157	46
50283159	157	47
50283160	157	48
50283161	157	52
50283162	157	38
50283163	157	54
50283164	157	42
50283165	157	43
50283166	157	63
50283167	159	2
50283168	159	13
50283169	159	16
50283170	159	23
50283171	159	27
50283172	159	37
50283173	159	38
50283174	159	42
50283175	159	14
50283176	143	37
50283177	143	38
50283178	143	39
50283180	201	14
50283181	201	15
50283182	219	6
50283183	223	6
50283184	223	7
50283185	223	8
50283197	221	8
50283198	225	13
50283199	227	10
50283200	227	12
50283202	13	2
50283203	17	6
50283204	17	7
50283205	17	8
50283206	147	6
50283207	147	25
50283208	147	26
50283209	147	27
50283211	143	12
50283212	143	15
50283213	143	17
50283214	143	24
50283215	159	1
50283216	159	41
50283217	7	4
50283218	127	20
50283219	127	21
50283220	127	22
50283221	127	23
50283222	127	24
50283223	179	2
50283224	179	19
50283226	5	8
50283226	7	11
50283229	123	6
50283230	41	1
50283231	105	10
50283232	41	5
50283233	131	6
50283234	41	8
50283235	129	18
50283239	63	1
50283241	63	5
50283242	63	6
50283243	19	49
50283244	19	24
50283245	127	45
50283246	127	46
50283247	127	47
50283248	67	10
50283249	67	11
50283250	121	5
50283251	5	24
50283251	7	27
50283252	27	8

Part No.	Page No.	Ref. No.
50283253	61	13
50283254	163	8
50283254	171	19
50283255	163	9
50283255	171	20
50283256	163	10
50283256	171	22
50283257	15	1
50283258	17	4
50283259	17	5
50283260	49	10
50283261	145	19
50283262	225	10
50283263	49	8
50283264	27	7
50283265	163	18
50283265	167	15
50283266	173	24
50283267	173	26
50283268	43	14
50283268	43	20
50283268	51	22
50283268	51	29
50283270	201	6
50283271	53	2
50283272	99	30
50283272	109	3
50283277	155	24
50283278	207	4
50283278	215	2
50283279	207	9
50283280	229	8
50283282	229	18
50283283	153	1
50283284	149	17
50283286	155	1
50283288	155	6
50283289	155	9
50283290	155	12
50283291	155	13
50283292	155	11
50283293	155	5
50283294	155	16
50283295	155	21
50283296	143	36
50283306	229	6
50283307	229	7
50283308	229	9
50283309	229	10
50283311	229	12
50283313	229	15
50283317	143	3
50283319	145	1
50283319	147	1
50283319	149	1
50283320	145	2
50283320	147	2
50283320	149	2
50283321	145	4
50283321	147	4
50283321	149	4
50283322	141	1
50283324	147	50
50283325	145	46
50283325	147	51
50283326	231	4
50283329	25	10
50283330	81	4
50283331	81	5
50283332	79	1
50283333	83	2
50283334	83	3
50283335	81	13
50283337	113	1
50283338	113	3
50283341	109	28
50283342	109	29
50283343	109	30
50283344	145	3
50283344	147	3
50283344	149	3
50283346	181	11
50283350	5	57
50283350	7	60
50283350	81	1
50283351	5	58
50283351	7	61
50283351	81	2
50283352	5	59
50283352	7	62
50283352	81	3
50283357	5	22
50283357	7	25
50283359	5	30
50283359	7	33
50283361	5	23
50283361	7	26
50283361	9	8
50283361	11	9
50283361	123	14A
50283361	129	21A
50283362	5	63
50283362	7	66
50283362	219	1
50283369	21	17
50283370	49	1
50283371	13	1
50283373	13	3
50283374	13	4
50283375	13	6
50283378	13	12
50283379	15	4
50283380	15	2
50283381	15	5
50283382	19	3
50283383	19	4
50283384	49	2
50283385	19	22
50283386	19	1
50283387	19	2

Part No.	Page No.	Ref. No.
50283388	19	5
50283389	19	6
50283391	13	14
50283392	19	18
50283393	19	13
50283394	19	14
50283395	19	16
50283396	19	20
50283397	19	21
50283398	19	26
50283399	17	14
50283400	19	27
50283401	19	63
50283402	19	28
50283403	19	29
50283404	19	30
50283405	21	4
50283406	23	1
50283407	21	9
50283409	19	32
50283410	19	33
50283412	25	1
50283415	25	4
50283416	27	1
50283417	25	6
50283418	25	7
50283420	25	11
50283422	29	1
50283424	45	3
50283426	45	6
50283427	39	1
50283428	39	2
50283429	39	3
50283430	33	2
50283431	123	2
50283432	123	3
50283433	43	2
50283434	47	3
50283435	47	4
50283437	35	17
50283438	53	4
50283439	55	13
50283440	55	14
50283441	55	15
50283442	55	16
50283443	55	17
50283445	55	2
50283446	55	4
50283447	55	7
50283448	55	10
50283449	55	8
50283451	51	16
50283452	137	1
50283454	137	2
50283455	55	20
50283455	55	21
50283456	51	23
50283458	43	10
50283458	51	24
50283460	43	11
50283462	53	8
50283465	53	12
50283466	53	13
50283468	53	14
50283469	51	25
50283470	43	12
50283472	51	30
50283473	45	10
50283475	41	2
50283476	41	3
50283477	53	15
50283479	53	16
50283480	137	3
50283482	43	17
50283483	43	18
50283484	41	4
50283485	41	13
50283486	51	27
50283487	51	28
50283488	51	18
50283489	51	19
50283490	51	20
50283491	51	21
50283493	55	22
50283495	55	23
50283496	43	19
50283497	69	1
50283498	69	2
50283499	69	5
50283500	69	8
50283501	71	3
50283502	71	6
50283503	71	7
50283504	81	6
50283505	71	8
50283507	69	11
50283509	73	2
50283511	73	5
50283512	73	6
50283514	67	6
50283515	67	7
50283516	67	8
50283517	67	9
50283518	75	6
50283519	75	7
50283520	75	9
50283522	75	10
50283524	77	3
50283526	77	4
50283527	87	1
50283528	87	3
50283528	121	4
50283530	87	9
50283531	87	10
50283532	123	5
50283533	87	11
50283534	93	8
50283535	93	6
50283537	99	10
50283538	95	1

Part No.	Page No.	Ref. No.
50283539	95	2
50283540	95	3
50283541	95	4
50283542	95	5
50283543	111	4
50283545	137	4
50283546	137	7
50283547	137	6
50283548	139	1
50283549	139	2
50283550	21	20
50283551	99	6
50283552	99	8
50283553	99	11
50283554	99	12
50283555	99	13
50283556	99	14
50283557	101	1
50283558	103	1
50283558	103	10
50283560	81	14
50283561	101	10
50283562	101	3
50283563	101	4
50283564	21	21
50283566	21	22
50283567	21	23
50283568	101	5
50283569	81	7
50283570	103	12
50283572	101	11
50283573	101	12
50283574	101	13
50283575	81	8
50283576	101	7
50283577	101	8
50283578	101	14
50283579	101	9
50283580	101	16
50283581	101	17
50283583	103	4
50283584	103	5
50283584	103	14
50283586	103	15
50283587	105	5
50283588	105	6
50283589	137	8
50283590	137	9
50283592	109	21
50283593	109	23
50283595	111	1
50283597	103	6
50283600	109	7
50283601	109	8
50283602	109	9
50283607	109	12
50283608	121	2
50283610	115	6
50283611	115	7
50283612	115	8
50283613	117	1
50283614	99	20
50283614	117	5
50283616	119	4
50283617	119	5
50283618	115	9
50283620	87	12
50283621	121	7
50283622	125	4
50283624	125	18
50283625	139	3
50283626	139	4
50283627	139	5
50283628	139	6
50283629	139	7
50283630	139	8
50283631	139	9
50283632	139	10
50283633	139	11
50283634	139	12
50283635	139	13
50283636	139	14
50283637	139	15
50283638	139	16
50283640	145	10
50283641	147	5
50283643	147	15
50283644	147	19
50283645	149	5
50283647	149	12
50283648	149	13
50283649	149	20
50283650	151	1
50283653	145	43
50283654	145	44
50283655	145	45
50283655	147	49
50283655	149	40
50283656	149	41
50283657	149	42
50283658	147	31
50283659	149	24
50283660	157	26
50283661	157	49
50283665	163	1
50283667	197	1
50283677	173	16
50283678	165	15
50283681	173	18
50283688	167	20
50283689	167	21
50283690	167	22
50283697	165	19
50283702	179	15
50283703	179	18
50283707	165	20
50283708	165	21
50283709	165	22
50283714	79	3
50283715	79	16

Part No.	Page No.	Ref. No.
50283716	165	24
50283717	165	25
50283719	163	28
50283719	173	25
50283721	163	29
50283722	167	27
50283723	181	9
50283724	167	29
50283724	173	33
50283729	163	33
50283730	163	15
50283730	171	26
50283731	163	31
50283731	165	12
50283731	165	38
50283731	169	26
50283731	171	12
50283732	175	12
50283750	163	12
50283750	165	26
50283750	171	23
50283756	165	27
50283756	173	27
50283757	165	28
50283775	183	1
50283776	187	10
50283777	185	8
50283778	197	18
50283780	163	36
50283781	163	37
50283782	181	18
50283783	181	20
50283786	205	5
50283787	205	6
50283790	89	1
50283791	89	4
50283792	189	2
50283793	189	4
50283794	189	5
50283795	199	1
50283796	199	2
50283797	199	3
50283798	199	4
50283799	193	10
50283800	191	1
50283801	197	26
50283802	193	11
50283804	193	7
50283806	197	27
50283807	197	28
50283809	205	14
50283810	205	15
50283811	195	9
50283813	195	4
50283814	195	5
50283816	195	7
50283818	195	11
50283823	207	10
50283825	207	11
50283826	197	29
50283832	193	8
50283832	193	12
50283842	209	5
50283843	209	6
50283844	209	7
50283847	193	9
50283851	209	8
50283852	209	9
50283856	207	12
50283857	197	34
50283863	203	1
50283865	203	4
50283867	203	5
50283869	203	2
50283871	203	6
50283873	203	7
50283874	203	8
50283880	215	11
50283881	215	12
50283882	199	5
50283883	199	6
50283884	191	2
50283885	189	6
50283890	205	29
50283891	199	7
50283893	207	13
50283894	207	14
50283897	201	16
50283898	201	17
50283899	145	47
50283899	223	12
50283900	223	13
50283902	151	31
50283903	223	14
50283904	223	4
50283905	151	32
50283906	145	5
50283908	145	9
50283909	145	11
50283910	145	15
50283911	145	23
50283912	145	24
50283913	145	33
50283914	225	8
50283915	205	2
50283916	195	10
50283918	31	2
50283923	5	20
50283923	7	23
50283928	13	10
50283929	13	11
50283930	17	1
50283931	17	2
50283932	23	5
50283934	27	2
50283935	37	2
50283937	43	5
50283937	47	2
50283938	51	3
50283939	51	4

Part No.	Page No.	Ref. No.
50283940	55	6
50283941	49	6
50283943	53	10
50283944	53	11
50283946	75	2
50283948	87	6
50283949	87	7
50283957	109	15
50283958	109	16
50283959	109	24
50283960	111	5
50283961	109	10
50283961	111	7
50283962	109	22
50283963	109	26
50283964	109	11
50283966	115	13
50283967	109	14
50283968	167	4
50283968	169	4
50283968	169	19
50283972	205	16
50283974	205	17
50283979	145	48
50283984	91	4
50283985	145	42
50283985	147	48
50283985	149	39
50283986	197	6
50283987	197	7
50283988	197	8
50283995	25	3
50283996	19	44
50283997	19	46
50283998	23	18
50283999	23	20
50284000	23	2
50284001	71	1
50284002	27	9
50284002	45	11
50284003	27	10
50284003	31	11
50284005	131	24
50284006	49	14
50284006	71	2
50284006	73	1
50284007	15	11
50284008	131	26
50284009	51	13
50284011	51	15
50284012	55	5
50284012	55	9
50284013	55	3
50284014	55	11
50284015	51	14
50284017	15	10
50284017	69	17
50284017	71	13
50284018	29	2
50284019	45	7
50284020	125	5
50284021	71	14
50284022	55	19
50284023	137	17
50284025	55	18
50284026	45	8
50284027	53	19
50284030	51	7
50284031	51	8
50284032	51	5
50284033	51	9
50284034	51	10
50284035	51	11
50284036	51	12
50284038	51	6
50284039	163	38
50284041	153	28
50284042	21	24
50284042	181	33
50284044	147	45
50284045	61	10
50284045	63	7
50284045	159	8
50284046	161	6
50284047	67	13
50284047	159	18
50284048	49	21
50284048	229	25
50284049	63	8
50284051	127	29
50284052	125	27
50284053	165	29
50284054	127	30
50284055	159	5
50284055	159	9
50284056	159	24
50284057	77	6
50284058	81	11
50284059	71	20
50284061	125	31
50284062	81	12
50284063	189	1
50284064	189	3
50284065	21	11
50284066	23	24
50284067	201	10
50284068	21	13
50284069	205	22
50284070	159	25
50284071	49	22
50284072	159	34
50284073	63	9
50284076	71	21
50284076	73	8
50284076	77	7
50284077	161	13
50284079	159	45
50284080	159	46
50284081	59	11
50284082	143	55

Part No.	Page No.	Ref. No.
50284083	181	25
50284084	159	29
50284085	159	30
50284086	159	31
50284087	143	40
50284088	159	47
50284090	159	32
50284091	159	33
50284092	125	28
50284092	127	31
50284093	155	8
50284094	151	23
50284095	31	23
50284095	31	24
50284095	179	13
50284095	179	27
50284096	53	22
50284096	55	25
50284098	99	25
50284100	153	29
50284101	151	38
50284101	223	26
50284101	225	19
50284102	143	58
50284104	19	61
50284105	45	16
50284105	45	17
50284105	55	26
50284105	137	21
50284106	145	54
50284106	147	54
50284106	149	45
50284107	129	20
50284108	205	26
50284109	123	12
50284109	205	27
50284110	139	18
50284111	221	11
50284115	67	19
50284116	23	26
50284117	145	55
50284117	147	55
50284117	149	46
50284117	151	43
50284118	67	20
50284118	133	35
50284119	161	16
50284120	69	24
50284123	227	14
50284123	229	31
50284126	145	56
50284127	109	43
50284129	167	12
50284129	169	12
50284129	169	25
50284130	165	36
50284131	173	32
50284132	127	32
50284133	165	37
50284134	159	15
50284136	159	36
50284137	143	59
50284138	137	22
50284141	31	8
50284143	59	1
50284144	181	1
50284147	21	1
50284148	69	27
50284148	71	27
50284149	149	38
50284149	151	29
50284150	145	18
50284150	153	26
50284151	147	22
50284151	149	23
50284152	181	31
50284153	19	47
50284153	23	4
50284153	23	8
50284153	23	21
50284153	39	25
50284153	131	22
50284851	157	60
50285137	43	15
50285137	45	9
50285139	15	6
50285391	163	32
50285892	165	39
50286167	205	11
50286171	205	13
50286175	205	7
50286185	205	9
50286197	123	4
50286205	221	3
50286207	227	1
50286209	227	2
50286211	227	3
50286227	229	11
50286235	207	3
50286237	207	16
50286239	229	4
50286241	229	5
50286243	229	14
50286245	229	16
50286247	229	17
50286285	37	6
50286287	93	1
50286289	119	1
50286291	121	3
50286293	145	60
50286295	205	3
50286297	205	4
50286299	223	31
50286365	37	5
50286367	115	3
50286369	205	10
50286371	205	12
50286373	223	1
50286375	225	2
50286377	223	32

Part No.	Page No.	Ref. No.
50286379	223	9
50286421	107	1
50286422	107	1E
50286423	107	1D
50286424	107	1D
50286425	107	1C
50286426	107	1B
50286427	107	1A
50286428	107	1D
50286461	23	19
50286462	39	18
50286463	157	55
50286464	157	56
50286465	157	40
50286466	159	21
50286467	159	22
50286468	39	17
50286515	23	6
50286516	99	3
50286517	99	5
50286518	117	3
50286519	117	4
50286520	175	8
50286521	173	7
50286522	171	8
50286523	171	21
50286524	169	20
50286525	167	6
50286525	169	6
50286526	165	9
50286527	163	11
50286528	163	26
50286529	175	2
50286530	173	1
50286531	173	12
50286532	171	2
50286533	171	14
50286534	169	14
50286535	169	1
50286536	167	14
50286537	167	1
50286538	165	2
50286539	165	14
50286540	163	3
50286541	163	17
50286542	175	1
50286543	173	11
50286544	171	1
50286545	171	13
50286546	169	13
50286547	167	13
50286548	165	1
50286549	165	13
50286550	163	2
50286551	163	16
50286552	171	9
50286552	173	8
50286552	175	9
50286553	173	21
50286554	223	11
50286555	67	2
50286556	67	5
50286557	177	4
50286558	177	6
50286559	177	7
50286560	177	22
50286561	39	10
50286562	217	6
50286563	197	30
50286564	197	31
50286565	197	32
50286566	197	33
50286567	213	1
50286568	213	2
50286569	213	3
50286570	213	4
50286571	213	5
50286572	213	6
50286573	211	5
50286574	211	6
50286575	211	7
50286576	211	8
50286577	195	12
50286578	211	9
50286579	211	10
50286580	215	9
50286581	191	4
50286582	191	5
50286583	215	10
50286584	211	11
50286585	211	12
50286586	213	7
50286587	211	13
50286588	195	13
50286591	23	3
50286594	163	34
50286600	23	14
50286601	31	3
50286602	99	9
50286603	109	4
50286604	173	29
50300780	5	12
50300780	7	15
50300834	5	5
50300834	7	8
50300958	233	1
50300968	233	2
50301126	1	2
50301147	5	56
50301147	7	59
50301147	35	3
210-32084	145	57
420-34912	1	7
420-34913	1	8
420-34914	1	9
425-34652	13	13
425-34728	181	32
425-34733	73	10
425-34733	81	15
425-34744	19	11

Part No.	Page No.	Ref. No.
425-34744	21	15
425-34744	23	15
425-34744	197	9
425-34745	177	19
425-34746	101	21
425-34750	49	17
425-34760	69	3
425-34765	101	22
425-34766	49	27
425-34776	167	9
425-34776	169	9
425-34776	169	22
425-34794	67	22
425-34838	49	28
425-34848	41	11
425-34891	27	18
425-34891	41	10
425-34891	49	18
425-34891	177	14
425-34902	123	9
425-34902	205	20
425-34902	205	21
425-34916	19	43
425-34916	23	17
425-34918	39	19
425-34918	195	2
425-34918	195	8
425-34918	195	14
425-34918	197	35
425-34918	209	4
425-34918	215	7
425-34924	23	12
425-34927	23	16
425-34930	49	29
425-34970	127	28
425-34984	229	33
425-35026	43	24
425-35026	51	34
425-35026	181	29
425-35206	125	29
425-35206	131	21
425-35232	159	4
425-35232	159	7
425-35678	157	67
425-35678	161	7
425-35678	181	19
425-35678	181	22
425-36133	13	15
425-36235	19	40
425-36271	21	16
425-36271	177	20

Z45 - Notes

TORQUE SPECIFICATIONS

Note: Use these torque values when tightening hardware (excluding: locknuts and self-tapping, thread forming and sheet metal screws) unless specified otherwise.

Hydraulic fittings with various seals (light application). All torque values are in lb.-ft. (Nm) unless marked otherwise.

Thread	Straight pipe fitting with thread and screwed plug (GE)			Non-return valve with elastic seal	Identification aid outside Ø
	Sealing washer	Elastic seal	O-ring		
M10X1.0	7 (9)	13 (18)	11 (15)	13 (18)	0.4 in. (10 mm)
M12X1.5	15 (20)	18 (25)	18 (25)	18 (25)	0.5 in. (12 mm)
M14X1.5	26 (35)	33 (45)	26 (35)	26 (35)	0.6 in. (14 mm)
M16X1.5	33 (45)	41 (55)	30 (40)	37 (50)	0.6 in. (16 mm)
M18X1.5	41 (55)	52 (70)	33 (45)	52 (70)	0.7 in. (18 mm)
M22X1.5	48 (65)	92 (125)	44 (60)	92 (125)	0.9 in. (22 mm)
M27X2.0	66 (90)	133 (180)	74 (100)	107 (145)	1.0 in. (27 mm)
M33X2.0	111 (150)	229 (310)	118 (160)	155 (210)	1.3 in. (33 mm)
M42X2.0	177 (240)	332 (450)	155 (210)	266 (360)	1.7 in. (42 mm)
M48X2.0	214 (290)	398 (540)	192 (260)	398 (540)	1.9 in. (48 mm)
G1/8A	7 (9)	13 (18)	11 (15)	13 (18)	0.4 in. (9.73 mm)
G1/4A	26 (35)	26 (35)	22 (30)	26 (35)	0.5 in. (13.16 mm)
G3/8A	33 (45)	52 (70)	33 (45)	37 (50)	0.7 in. (16.66 mm)
G1/2A	48 (65)	66 (90)	41 (55)	48 (65)	0.8 in. (20.96 mm)
G3/4A	66 (90)	133 (180)	74 (100)	103 (140)	1.0 in. (26.44 mm)
G1A	111 (150)	229 (310)	118 (160)	140 (190)	1.3 in. (33.25 mm)
G1 1/4A	177 (240)	332 (450)	155 (210)	266 (360)	1.7 in. (41.91 mm)
G1 1/2A	214 (290)	398 (540)	192 (260)	398 (540)	1.9 in. (47.80 mm)

Hydraulic fittings with various seals (heavy application). All torque values are in lb.-ft. (Nm) unless marked otherwise.

Thread	Straight pipe fitting with thread and screwed plug (GE)			Non-return valve with elastic seal	Identification aid outside Ø
	Sealing washer	Elastic seal	O-ring		
M12X1.5	15 (20)	26 (35)	26 (35)	26 (35)	0.5 in. (12 mm)
M14X1.5	26 (35)	41 (55)	33 (45)	33 (45)	0.6 in. (14 mm)
M16X1.5	33 (45)	52 (70)	41 (55)	41 (55)	0.6 in. (16 mm)
M18X1.5	41 (55)	66 (90)	52 (70)	52 (70)	0.7 in. (18 mm)
M20X1.5	41 (55)	92 (125)	59 (80)	74 (100)	0.8 in. (20 mm)
M22X1.5	48 (65)	100 (135)	74 (100)	92 (125)	0.9 in. (22 mm)
M27X2.0	66 (90)	133 (180)	125 (170)	100 (135)	1.0 in. (27 mm)
M33X2.0	111 (150)	229 (310)	229 (310)	155 (210)	1.3 in. (33 mm)
M42X2.0	177 (240)	332 (450)	243 (330)	266 (360)	1.7 in. (42 mm)
M48X2.0	214 (290)	398 (540)	310 (420)	398 (540)	1.9 in. (48 mm)
G1/8A	26 (35)	41 (55)	33 (45)	33 (45)	0.5 in. (13.16 mm)
G1/4A	33 (45)	59 (80)	44 (60)	44 (60)	0.7 in. (16.66 mm)
G3/8A	48 (65)	85 (115)	55 (75)	74 (100)	0.8 in. (20.96 mm)
G1/2A	66 (90)	133 (180)	125 (170)	107 (145)	1.0 in. (26.44 mm)
G3/4A	111 (150)	229 (310)	229 (310)	192 (260)	1.3 in. (33.25 mm)
G1A	177 (240)	332 (450)	243 (330)	266 (360)	1.7 in. (41.91 mm)
G1 1/4A	214 (290)	398 (540)	310 (420)	398 (540)	1.9 in. (47.80 mm)

English coarse and fine pitch threads. All torque values are in lb.-ft. (Nm) unless marked otherwise.

Values marked with an asterisk (*) are in lb-in., values marked (**) are in Kg-Cm

Thread - Pitch	Grade 2		Grade 5		Grade 8	
	Dry	Lubed	Dry	Lubed	Dry	Lubed
8-32	19* (21**)	14* (16**)	30* (34**)	22* (25**)	41* (47**)	31* (35**)
8-36	20* (23**)	15* (17**)	31* (35**)	23* (26**)	43* (49**)	32* (36**)
10-24	27* (31**)	21* (24**)	43* (49**)	32* (36**)	60* (69**)	45* (51**)
10-32	31* (35**)	23* (26**)	49* (56**)	36* (41**)	68* (78**).	51* (58**)
1/4-20	66* (76**)	50* (57**)	9 (12)	75* (86**)	12 (16)	9 (12)
1/4-28	76* (87**)	56* (64**)	10 (14)	86* (99**)	14 (19)	10 (14)
5/16-18	11 (1.5)	9 (12)	17 (23)	13 (18)	25 (34)	18 (24)
5/16-24	12 (16)	9 (12)	19 (26)	14 (19)	25 (34)	20 (27)
3/8-16	20 (27)	15 (20)	30 (41)	23 (31)	45 (61)	35 (47)
3/8-24	23 (31)	17 (23)	35 (47)	25 (34)	50 (68)	35 (47)
7/16-14	32 (43)	24 (33)	50 (68)	35 (47)	70 (95)	55 (75)
7/16-20	36 (49)	27 (37)	55 (75)	40 (54)	80 (108)	60 (81)
1/2-13	35 (47)	35 (47)	75 (102)	55 (75)	110 (149)	80 (108)
1/2-20	40 (54)	40 (54)	90 (122)	65 (88)	120 (163)	90 (122)
9/16-12	55 (75)	55 (75)	110 (149)	80 (108)	150 (203)	110 (149)
9/16-18	60 (81)	60 (81)	120 (163)	90 (122)	170 (230)	130 (176)
5/8-11	75 (102)	75 (102)	150 (203)	110 (149)	220 (298)	170 (230)
5/8-18	85 (115)	85 (115)	180 (244)	130 (176)	240 (325)	180 (244)
3/4-10	130 (176)	130 (176)	260 (353)	200 (271)	380 (515)	280 (380)
3/4-16	150 (203)	150 (203)	300 (407)	220 (298)	420 (569)	320 (434)
7/8-9	125 (169)	125 (169)	430 (583)	320 (434)	600 (813)	460 (624)
7/8-14	140 (190)	140 (190)	470 (637)	360 (488)	660 (895)	500 (678)
1-8	190 (258)	190 (258)	640 (868)	480 (651)	900 (1220)	680 (922)
1-14	210 (285)	210 (285)	710 (963)	530 (719)	1000 (1356)	740 (1003)

With coarse-pitch thread. All torque values are in lb.-ft. (Nm) unless marked otherwise.					
Thread	Threads according to DIN 912, DIN 931, DIN 933, etc.			Threads according to DIN 7984	
	8.8	10.9	12.9	8.8	10.9
M5	4.1 (5.5)	6 (8)	7 (10)	4 (5)	5 (7)
M6	7 (10)	10 (14)	13 (17)	6.3 (8.5)	9 (12)
M8	18 (25)	26 (35)	31 (42)	15 (20)	22 (30)
M10	33 (45)	48 (65)	59 (80)	30 (40)	44 (59)
M12	64 (87)	81 (110)	108 (147)	51 (69)	74 (100)
M14	100 (135)	133 (180)	170 (230)	81 (110)	118 (160)
M16	155 (210)	203 (275)	258 (350)	125 (170)	184 (250)
M18	207 (280)	302 (410)	354 (480)	181 (245)	254 (345)
M20	302 (410)	420 (570)	509 (690)	251 (340)	361 (490)
M22	406 (550)	575 (780)	686 (930)	339 (460)	487 (660)
M24	524 (710)	738 (1000)	878 (1190)	435 (590)	620 (840)
M27	767 (1040)	1092 (1480)	1305 (1770)	642 (870)	922 (1250)
M30	1047 (1420)	1482 (2010)	1770 (2400)	885 (1200)	1254 (1700)

With fine-pitch thread. All torque values are in lb.-ft. (Nm) unless marked otherwise.					
Thread	Threads according to DIN 912, DIN 931, DIN 933, etc.			Threads according to DIN 7984	
	8.8	10.9	12.9	8.8	10.9
M8X1.0	18 (25)	27 (37)	32 (43)	16 (22)	24 (32)
M10X1.0	37 (50)	55 (75)	65 (88)	32 (43)	48 (65)
M10X1.25	36 (49)	52 (71)	61 (83)	31 (42)	46 (62)
M12X1.25	64 (87)	96 (130)	111 (150)	55 (75)	81 (110)
M12X1.5	61 (83)	92 (125)	107 (145)	53 (72)	77 (105)
M14X1.5	100 (135)	148 (200)	173 (235)	89 (120)	129 (175)
M16X1.5	155 (210)	229 (310)	266 (360)	133 (180)	195 (265)
M18X1.5	232 (315)	332 (450)	391 (530)	199 (270)	284 (385)
M20X1.5	325 (440)	465 (630)	538 (730)	277 (375)	391 (530)
M22X1.5	435 (590)	620 (840)	723 (980)	369 (500)	524 (710)
M24X2.0	546 (740)	789 (1070)	922 (1250)	465 (630)	664 (900)
M27X2.0	811 (1100)	1143 (1550)	1328 (1800)	679 (920)	959 (1300)
M30X2.0	1106 (1500)	1586 (2150)	1844 (2500)	959 (1300)	1364 (1850)



Manitou Americas, Inc. P.O. Box 179, West Bend, WI 53095-0179 U.S.A.
www.gehl.com

50940085/BP1212 **© 2012 All rights reserved.** **Printed in U.S.A.**