RUTHZIL TRATOR COMERCIAL DE PEÇAS LTDA 11 97083-6812 ROLANDO CITRANGULO

PART NO. 610241745046

TATA HITACHI

Reliable solutions

PARTS MANUAL

ZAXIS 370

370

Hydraulic Excavator

Tata Hitachi Construction Machinery Company Limited
Toll Free : 1800 3456 500 (In India Only)

BLANK

FOREWORD

◎ According to Tata Hitachi's continuous effort to imporve the product quality, descriptions in the Parts Catalog may be slightly different from your machine. If any questionable points are found, feel free to contact your nearest Tata Hitachi dealer.

◎ For the engine parts, please refer to the parts catalog of diesel engine issued separately.

1. HOW TO ORDER PARTS

When ordering parts, please specify the following items.

(1) Model/type
(2) Product Identification Number
(3) Part No.
(4) Part Name
(5) Q'ty
(6) Purchaser's Name and Address

2. HOW TO USE THIS PARTS CATALOG

PART NAME : When the part is used as an inner part of an assembly part, the mark "." is shown in front of the part name.

Q'TY. Indicates the number of the part used per machine. The quantity of an inner part is the number of the inner part necessary to organize one assembly part.

SYMBOLS USED IN THIS BOOK:

The symbols shown in the service code and interchangeability columns are used to indicate the following information.

W: Requires additional processing at the job site. Ask your nearest Tata Hitachi dealer.

H: Indicate a precise part. Ask your nearest Tata Hitachi dealer for its repair.

D: Impossible to replace as a single part. Replace the part in an assembly unit.

K: Contained in the service part kit.

R: Indicate that the quantity of the part like shims differs depending on the machine serial No.

S: To be supplied as repair or service parts.

Z: Engine related parts.

OP: Optional parts not equipped on the standard specification model. To be supplied upon receiving a special order.

OS: Over-sized parts

US: Undersized parts

(Part with mark "OS, or US" is described in the next column under the standard size part column.)

#. Indicates newly added parts to the equipment or component.

Y. Interchangeable part without any constraint.

I. Used to indicate the part No. and quantity of the part to be used for the part concerned in the replacement part column. However, the part concerned is not used for the part shown with mark I.

T. Becomes interchangeable when combined.

P. Indicate the part prohibited to use. Use the part shown in the replacement part column.

SERIAL NO. : The serial number corresponds to the last six-digit figure of the PIN (Product Identification Number) on the name-plate.

D: Represents the date of modification. (Example: D03/09: New modification part has been applied to the products manufactured in and after Sept 2003.)

H: Indicates the component manufacturing No.

F: Indicates the front attachment manufacturing No.

REPLACEABLE PART:

Indicates the part No. and quantity per machine or the replacement part.

NOTE: When the part with mark Y, I, or P shown in the interchangeability column is ordered, the part shown in the replacement part column may be automatically supplied instead of the ordered part.

MEMORANDUM

Please ensure the details are furnished for any future correspondence

MACHINE SR. NO.		
ENGINE MODEL		
ENGINE NO.		
BATTERY	MAKE SR. NO.	
STARTER MOTOR	MAKE SR. NO.	
RADIATOR		
OIL COOLER		

C O N T E N T S

GROUPNAME	PAGE
FRAME	2
ENGINE PARTS	4
ENGINE CONTROL (MOTOR ASSY.)	6
ENGINE CONTROL	7
STOP CABLE	8
RADIATOR PARTS	9
RADIATOR ASSY.	10
RADIATOR COVER	12
INTER COOLER PIPING	14
INTER COOLER NET	16
AUX. TANK ASSY.	17
PRECLEANER PARTS	18
PRE CLEANER	19
AIR CLEANER ASSEMBLY	20
AIR CLEANER PARTS	21
MUFFLER ASSY.	22
PARTS FUEL TANK	23
FUEL TANK	24
FUEL DOUBLE FILTER	26
FUEL PIPING	28
FILTER PIPING	30
FUEL FEED PUMP	32
TANK OIL	34
SWING DEVICE	36
MOTOR; OIL (SWING)	38
SUCTION PIPING	40
DELIVERY PIPING	42
DRAIN PIPING	44
MAIN PIPING (1)	45
MAIN PIPING (2)	46
MAIN PIPING (3)	47
MAIN PIPING (4)	48
RETURN PIPING (1)	50
RETURN PIPING (2)	52
PILOT PIPING (1)	54
PILOT PIPING (2)	56
PILOT PIPING (3)	57
PILOT PIPING (4)	58

CONTENTS

GROUPNAME	PAGE
PILOT PIPING (5-1)	60
PILOT PIPING (5-2)	62
PILOT PIPING (5-3)	63
PILOT PIPING (6)	64
PILOT PIPING (7)	65
PILOT PIPING (8)	66
PILOT PIPING (9)	68
PILOT PIPING (10)	70
PILOT PIPING (11)	72
SIDE BRANCH PIPING	74
BOOM BOTTOM PIPING	75
PUMP DEVICE	76
PUMP; UNIT	78
PUMP GEAR	82
VALVE PARTS	84
VALVE; CONTROL (1/6)	86
VALVE; CONTROL (2/6)	88
VALVE; CONTROL (3/6)	90
VALVE; CONTROL (4/6)	92
VALVE; CONTROL (5/6)	94
VALVE; CONTROL (6/6)	96
VALVE SOLENOID	98
WINDOW WASHER ASSY.	99
CAB GROUP	100
CAB GROUP	101
SEAT STAND	102
SEAT ASSY.	104
FLOOR PARTS	106
FLOOR PLATE	107
CONTROL LEVER (TRAVEL)	108
VALVE; PILOT (TRAVEL)	110
CONTROL LEVER ASSY. (FRONT & SWING)	112
VALVE; PILOT (FRONT, SWING)	114
LOCK LEVER ASSY.	116
CONSOL	117
CONSOL COVER (1)	118
RIGHT COVER ASSY.	120
CAB TOP LIGHT ASSY.	121

C O N T E N T S

GROUPNAME	PAGE
CONTROL UNIT	122
RADIO (AM/FM)	123
REAR BOX	124
ELECTRICAL PARTS (A)	126
ELECTRICAL PARTS (B)	128
ELECTRICAL PARTS (C)	130
ELECTRICAL PARTS (D)	132
ELECTRICAL PARTS (E)	134
COVER (1)	136
COVER ASSY. (3)	138
COVER (4)	139
COVER (5)	140
COVER (6)	142
COVER (8)	144
UNDER COVER	145
ENGINE COVER	146
TOOL COVER ASSY.	148
TROPICAL COVER	150
AIR CONDITION (1)	152
AIR CONDITION UNIT	154
AIR CONDITION (2)	158
AIR CONDITION (3)	160
AIR CONDITION (4)	161
CONDENSER NET	162
DUCT	163
HEATER PARTS	164
COUNTER WEIGHT	165
TRACK FRAME ASSY.	168
TRAVEL PIPING	170
TRACK GUARD	172
TRACK GUARD (FULL LENGTH)	173
TRACK ADJUSTER ASSY.	174
CENTRE JOINT ASSY. WITH PARTS	176
TRAVEL DEVICE	178
MOTOR; OIL (TRAVEL)	180
SWING BEARING PARTS	182
SLEW CIRCLE RING	183
TRACK LINK ASSY.	184

CONTENTS

GROUPNAME	PAGE
TRACK LINK ASSY.	185
UPPER ROLLER	186
UPPER ROLLER ASSY.	187
ROLLER LOWER	188
TRACK ROLLER ASSY.	189
IDLER ASSY.	190
IDLER ASSY.	191
BOOM ASSY. 6.4M	194
FRONT PIPING	196
LUBRICATION PIPING	198
ARM; ASSY.	200
H - LINK	202
LINK	203
BOOM CYLINDER H	206
CYLINDER BOOM (LH)	208
BOOM CYLINDER (LH)	210
BOOM CYLINDER (RH)	212
CYLINDER BOOM (RH)	214
BOOM CYLINDER (RH)	216
ARM CYLINDER	218
CYLINDER ARM	222
ARM CYLINDER	224
BUCKET CYLINDER	226
CYLINDER BUCKET	228
BUCKET CYLINDER	230
BUCKET 2.1 CU.M	234
BUCKET ASSY. 1.7 CU.M	235
BUCKET ASSY. 1.5 CU.M	236
BUCKET ASSY. 1.3 CU.M	237
TOOLS	240
NAME PLATE ASSY.	242
EMERGENCY SPARES	244

❖ ❖ ❖

FRAME

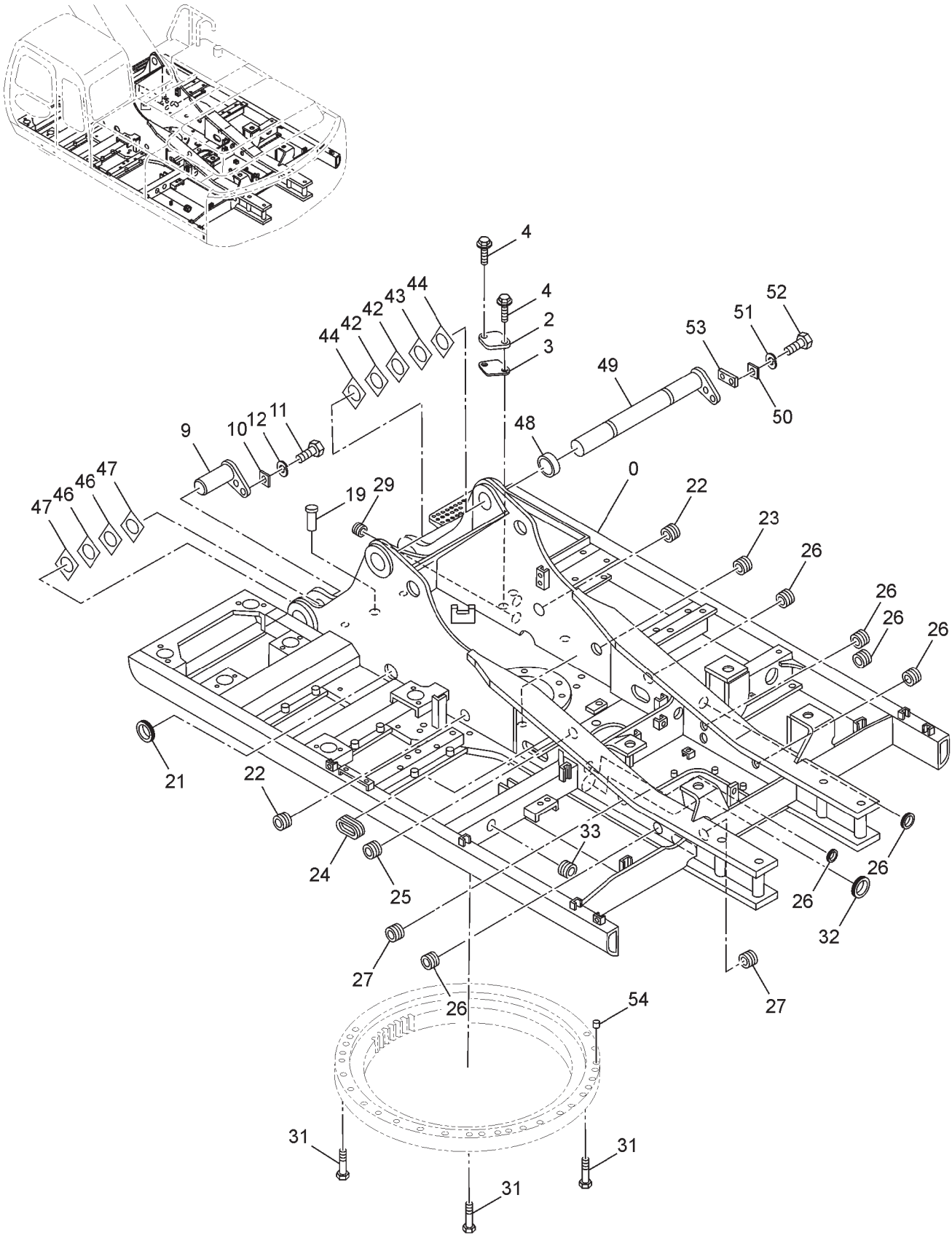
4
4
2
3
44
42
42
43
44
49
53
51
52
50
48
9
10
12
11
47
46
46
47
19
29
0
22
23
26
26
26
26
21
22
33
24
25
26
26
32
27
26
27
54
31
31
31

FRAME

ITEM	PART NO.	PART NAME	QTY	S.C.	SERIAL NO.	ICA	REPLACEABLE PART	
							PART NO.	QTY
--	**9191435**	**FRAME**	**--**					
0	5007074	MAIN FRAME	1		0ACH-000001			
2	4255799	COVER	1		0ACH-000001			
3	4161735	PACKING	1		0ACH-000001			
4	J021025	BOLT;SEMS	2		0ACH-000001			
9	8080936	PIN	2		0ACH-000001			
10	4426128	PLATE	2		0ACH-000001			
11	J921845	BOLT	2		0ACH-000001			
12	J257218	WASHER;SPRING	2		0ACH-000001			
19	4385472	PIN;KNOCK	3		0ACH-000001			
21	4196826	BUSHING;RUBBER	1		0ACH-000001			
22	4273759	BUSHING;RUBBER	2		0ACH-000001			
23	4315991	BUSHING;RUBBER	1		0ACH-000001			
24	4277018	BUSHING;RUBBER	1		0ACH-000001			
25	4200176	BUSHING RUBBER	1		0ACH-000001			
26	4255530	BUSHING;RUBBER	7		0ACH-000001			
27	4201749	BUSHING;RUBBER	2		0ACH-000001			
29	4210661	BUSHING;RUBBER	3		0ACH-000001			
31	J922706	BOLT	36		0ACH-000001			
32	4201986	BUSHING;RUBBER	1		0ACH-000001			
33	4208279	BUSHING;RUBBER	1		0ACH-000001			
42	4469095	THRUST PLATE	2		0ACH-000001			
43	4469096	THRUST PLATE	1		0ACH-000001			
44	4469097	THRUST PLATE	2		0ACH-000001			
46	4469095	THRUST PLATE	4		0ACH-000001			
47	4469097	THRUST PLATE	4		0ACH-000001			
48	TE04688	BUSHING	2		0ACH-000001			
49	8094093	PIN	1		0ACH-000001			
50	4611733	PLATE	1		0ACH-000001			
51	J257222	WASHER;SPRING	1		0ACH-000001			
52	J922245	BOLT	1		0ACH-000001			
53	4611688	BLOCK	1		0ACH-000001			
54	Z425175	CORK	2		0ACH-000203			

ENGINE PARTS

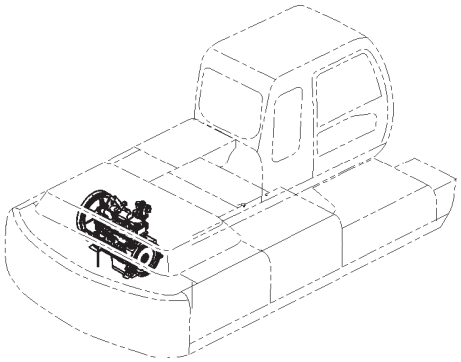

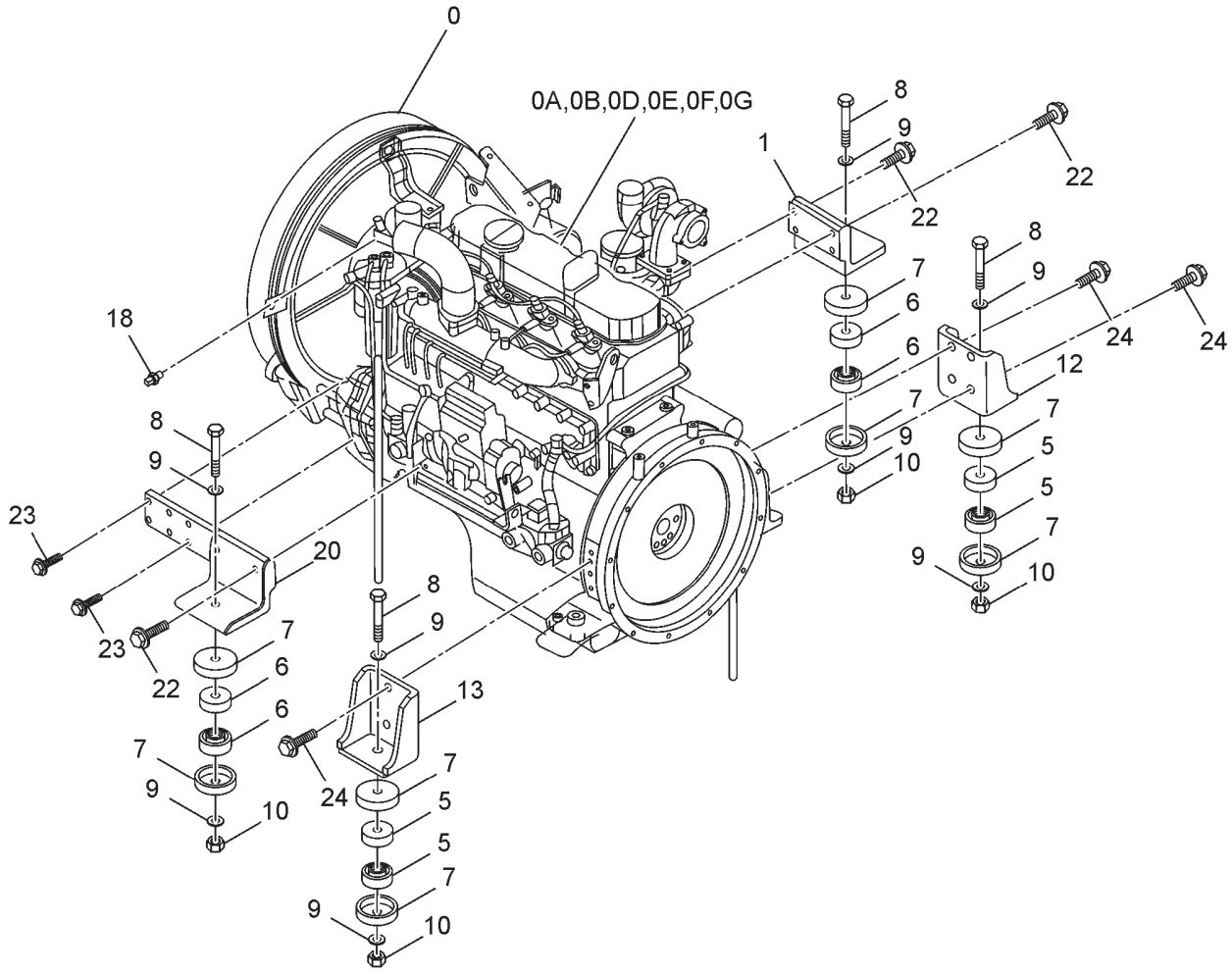

ENGINE PARTS

ITEM	PART NO.	PART NAME	QTY	S.C.	SERIAL NO.	ICA	REPLACEABLE PART	
							PART NO.	QTY
--	**9191438**	**ENGINE PARTS**	--					
0	4489385	ENGINE	1	Z	0ACH-000001			
0A	4404301	BOLT;FAN (1=3 PIECES)	1	Z	0ACH-000001			
0A	4603925	BOLT;FAN (1 PIECES)	1	Z	0ACH-000001			
0B	4192631	FILTER;FUEL	1	Z	0ACH-000001			
0C	4371903	SWITCH;LEVEL	1	Z	0ACH-000001			
0D	4454117	SWITCH;PIPES	1	Z	0ACH-000001			
0E	4371318	SWITCH;THERMO	1	Z	0ACH-000001			
0F	4467212	GENERATOR	1	Z	0ACH-000001			
0F	4489830	GENERATOR	1	Z	0ACH-000001			
0G	4404303	STITCH;THERMO	1	Z	0ACH-000001			
1	8080785	BRACKET	1		0ACH-000001			
5	4188649	RUBBER	4		0ACH-000001			
6	4256314	RUBBER	4		0ACH-000001			
7	4189018	STOPPER	8		0ACH-000001			
8	J921806	BOLT	4		0ACH-000001			
9	J222018	WASHER	8		0ACH-000001			
10	J950018	NUT	4		0ACH-000001			
12	7038769	BRACKET	1		0ACH-000001			
13	8080787	BRACKET	1		0ACH-000001			
18	4436537	SENSOR; PRESSURE	1		0ACH-000001			
20	8091314	BRACKET	1		0ACH-000001			
22	J271055	BOLT; SEMS	8		0ACH-000001			
23	J271035	BOLT; SEMS	2		0ACH-000001			
24	J271260	BOLT;SEMS	8		0ACH-000001			

ENGINE CONTROL (MOTOR ASSY.)

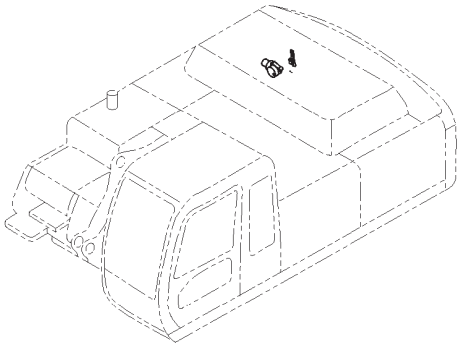

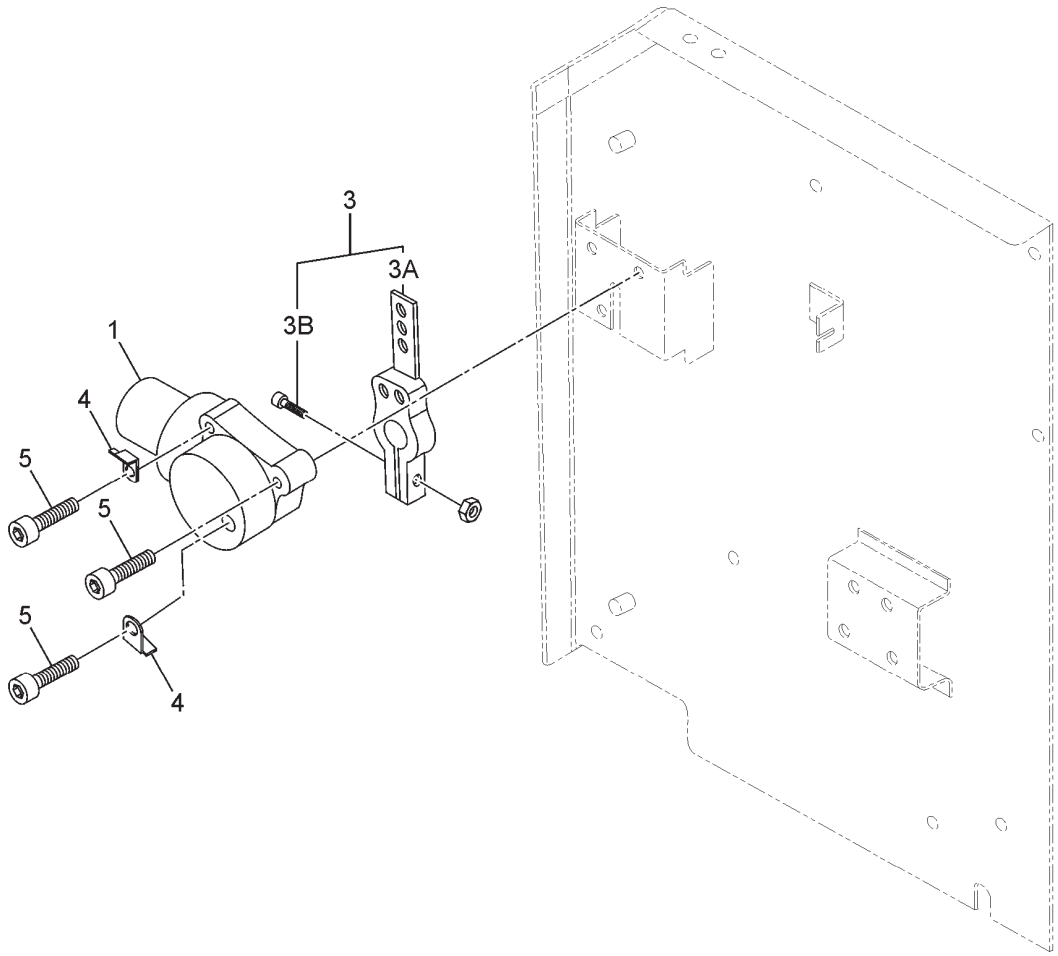

ITEM	PART NO.	PART NAME	QTY	S.C.	MACHINE SERIAL NO. ONWARDS	ICA	REPLACEABLE PART	
							PART NO.	QTY
--	**9183810**	**MOTOR ASSY.**	**--**					
1	4614911	MOTOR	1		0ACH-000001			
3	9207252	LEVER	1		0ACH-000001			
3A	9756079	LEVER	1		0ACH-000001			
3B	J780820	BOLT	1		0ACH-000001			
4	4257159	BRACKET	2		0ACH-000001			
5	M341060	BOLT;SOCKET	3		0ACH-000001			

ENGINE CONTROL

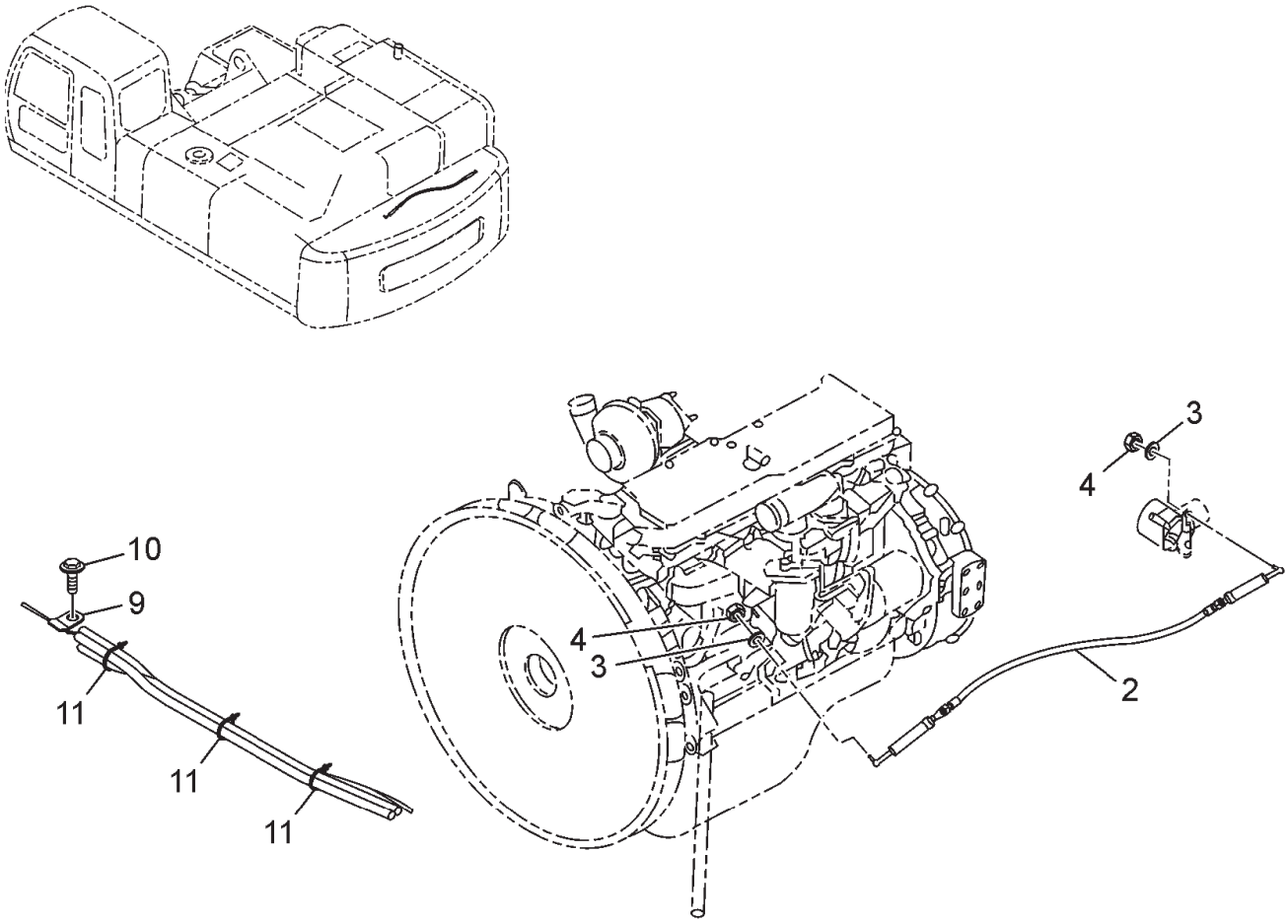

ITEM	PART NO.	PART NAME	QTY	S.C.	MACHINE SERIAL NO. ONWARDS	ICA	REPLACEABLE PART	
							PART NO.	QTY
--	**9191470**	**ENGINE CONTROL**	--					
2	4440150	CONTROL CABLE	1		0ACH-000001			
3	A590906	WASHER;SPRING;M	2		0ACH-000001			
4	M500605	NUT	2		0ACH-000001			
9	4190276	CLIP	1		0ACH-000001			
10	J011020	BOLT; SEMS	1		0ACH-000001			
11	4055312	CLIP;BAND	3		0ACH-000001			

STOP CABLE

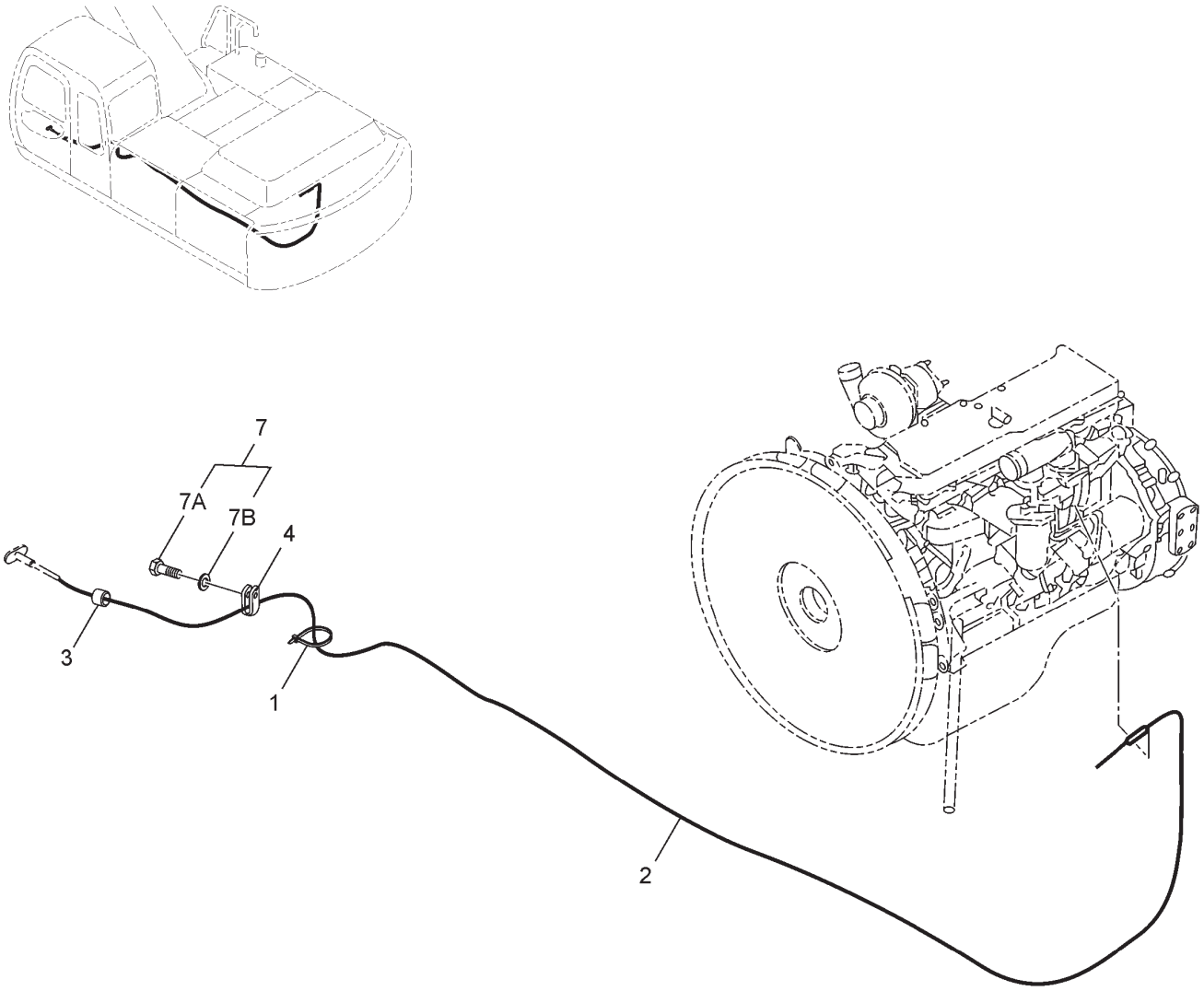

ITEM	PART NO.	PART NAME	QTY	S.C.	MACHINE SERIAL NO. ONWARDS	ICA	REPLACEABLE PART	
							PART NO.	QTY
--	**9191469**	**CABLE; STOP**	**--**					
1	4055312	CLIP;BAND	1		0ACH-000001			
2	4441292	CABLE CONTROL	1		0ACH-000001			
3	4184582	BUSHING RUBBER	1		0ACH-000001			
4	4441190	CLIP; WIRE	1		0ACH-000001			
7	J260830	BOLT; SEMS	1	D	0ACH-000001			
7A	J900830	BOLT	1	D	0ACH-000001			
7B	A590108	WASHER;PLANE	1	D	0ACH-000001			

RADIATOR PARTS

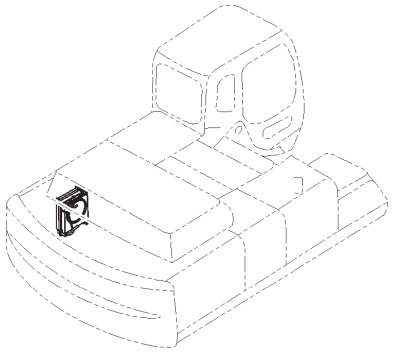

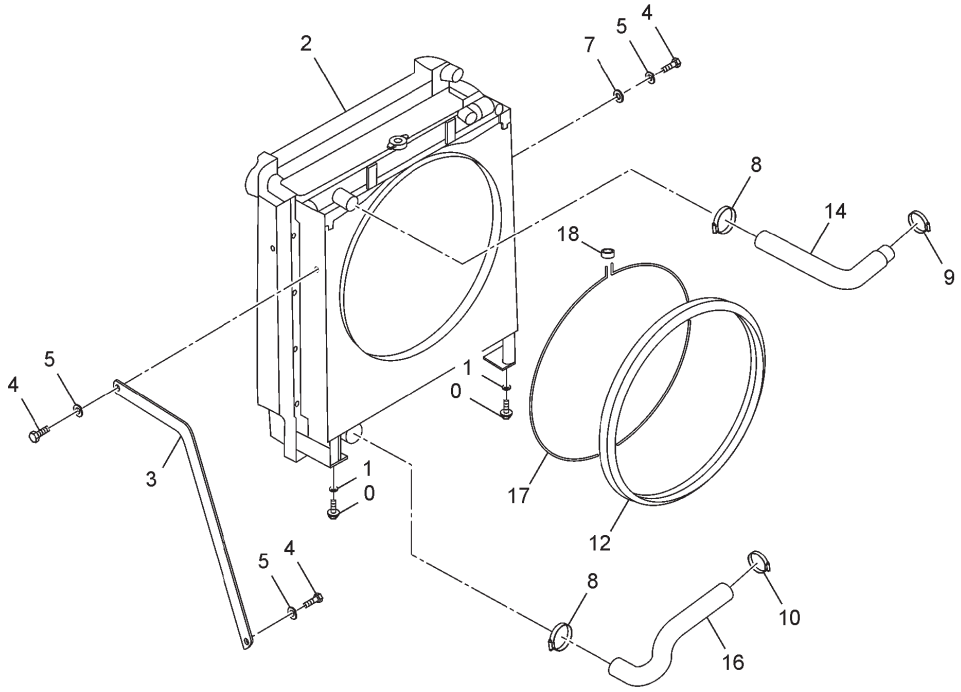

ITEM	PART NO.	PART NAME	QTY	S.C.	MACHINE SERIAL NO. ONWARDS	ICA	REPLACEABLE PART	
							PART NO.	QTY
--	**9191440**	**PARTS; RADIATOR**	**--**					
0	J921640	BOLT	4		0ACH-000001			
1	A590916	WASHER;SPRING	4		0ACH-000001			
2	4429250	RADIATOR ASSEMBLY (ROC)	1		0ACH-000001			
3	3087164	STAY	1		0ACH-000001			
4	J921635	BOLT	3		0ACH-000001			
5	A590916	WASHER;SPRING	3		0ACH-000001			
7	J222016	WASHER	1		0ACH-000001			
8	4504491	CLAMP;HOSE	2		0ACH-000001			
9	4504199	CLAMP; PIPE	1		0ACH-000001			
10	4507512	CLAMP;HOSE	1		0ACH-000001			
12	4439299	RUBBER	1		0ACH-000001			
14	3089835	HOSE;WATER	1		0ACH-000001			
16	3093511	HOSE;WATER	1		0ACH-000001			
17	4441140	BAND	1		0ACH-000001			
18	4426044	LOCK	1		0ACH-000001			

RADIATOR ASSY.

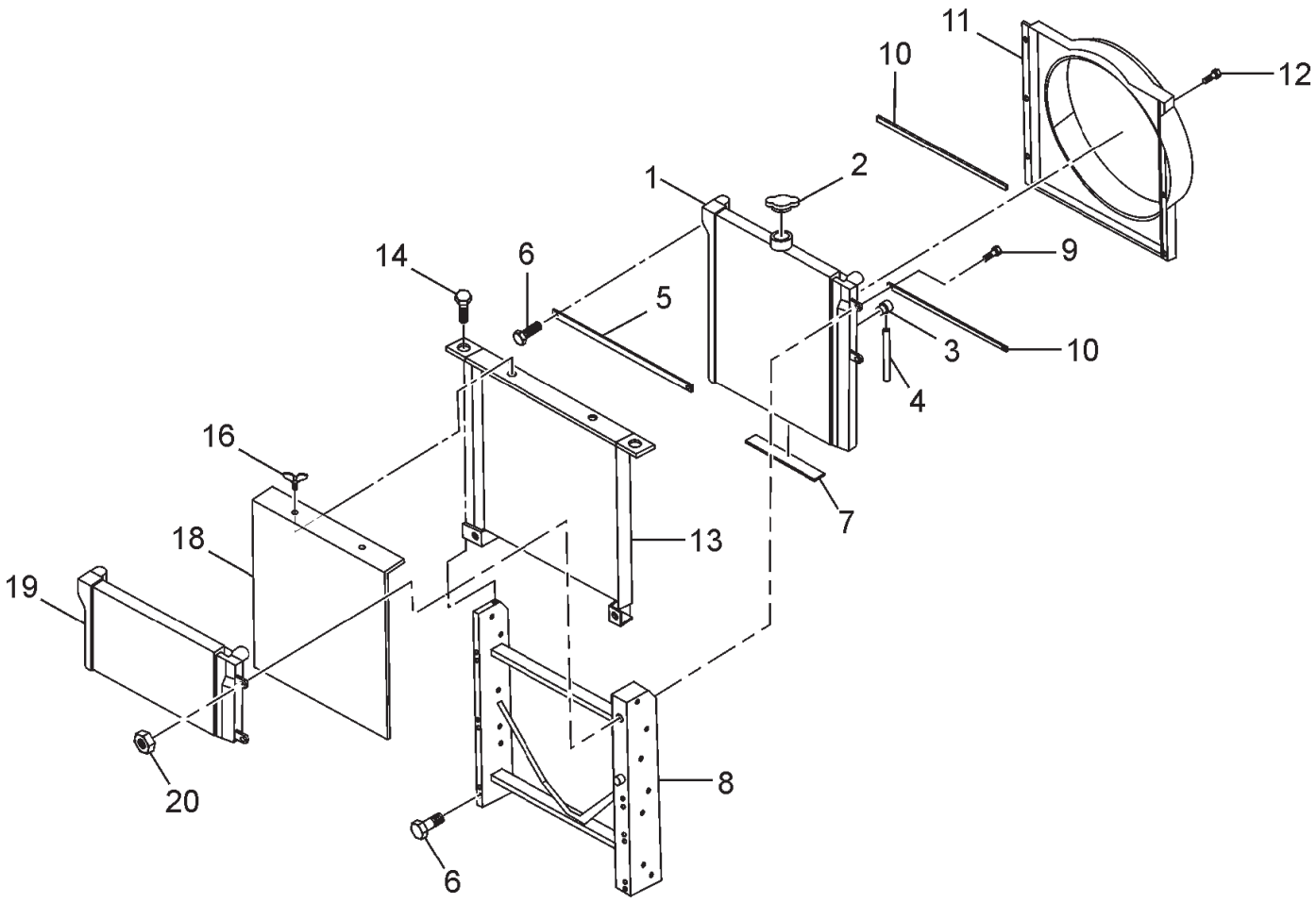

RADIATOR ASSY.

ITEM	PART NO.	PART NAME	QTY	S.C.	MACHINE SERIAL NO. ONWARDS	ICA	REPLACEABLE PART	
							PART NO.	QTY
--	**4429250**	**RADIATOR ASSY. (ROC)**	**--**					
1	4454113	CORE;RADIATOR	1		0ACH-000001			
2	4343268	CAP	1		0ACH-000001			
3	4206928	PLUG;DRAIN	1		0ACH-000001			
4	4148706	HOSE	1		0ACH-000001			
5	4463295	STAY	1		0ACH-000001			
6	4371258	BOLT	6		0ACH-000001			
7	4463296	PACKING	1		0ACH-000001			
8	4463297	FRAME	1		0ACH-000001			
9	4463301	BOLT	8		0ACH-000001			
10	4463298	PACKING	2		0ACH-000001			
11	4463299	SHROUD	1		0ACH-000001			
12	4371243	BOLT	8		0ACH-000001			
13	4463075	COOLEROIL	1		0ACH-000001			
14	4460245	BOLT	4		0ACH-000001			
16	4229973	BOLT	2		0ACH-000001			
18	4463300	NET	1		0ACH-000001			
19	4463076	INTERCOOLER	1		0ACH-000001			
20	4454105	NUT	4		0ACH-000001			

RADIATOR COVER

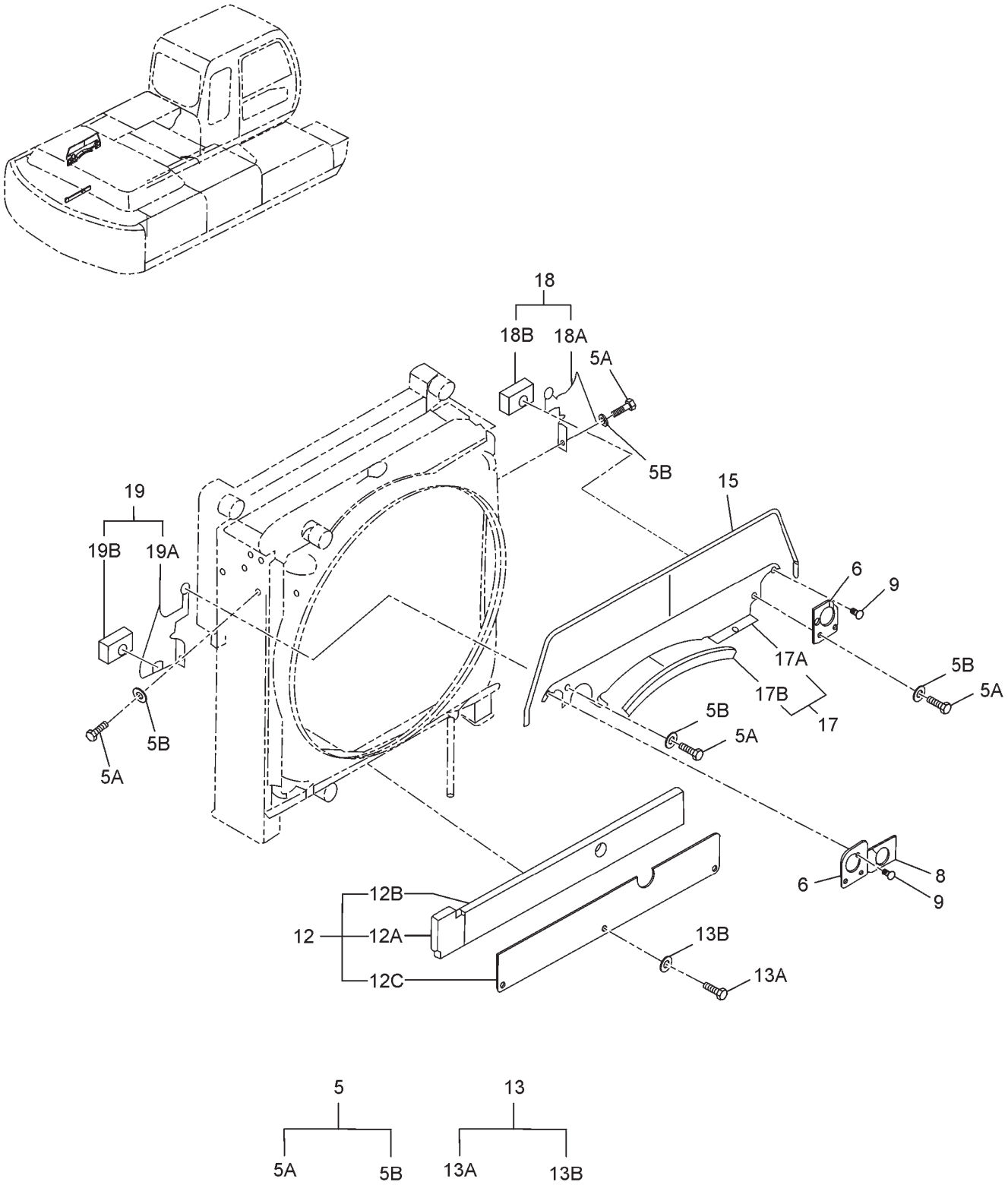

RADIATOR COVER

ITEM	PART NO.	PART NAME	QTY	S.C.	MACHINE SERIAL NO. ONWARDS	ICA	REPLACEABLE PART	
							PART NO.	QTY
--	**9191441**	**COVER RADIATOR**	**--**					
5	J271016	BOLT; SEMS	4	D	0ACH-000001			
5A	J901016	HEX BOLT	1	D	0ACH-000001			
5B	A590110	WASHER;PLANE	1	D	0ACH-000001			
6	4440532	RUBBER	2		0ACH-000001			
8	4440395	RUBBER	1		0ACH-000001			
9	4425573	CLIP	14		0ACH-000001			
12	8081071	COVER	1		0ACH-000001			
12A	4446675	RUBBER	1		0ACH-000001			
12B	4446589	RUBBER	1		0ACH-000001			
12C	3091699	COVER	1		0ACH-000001			
13	J281030	BOLT; SEMS	3	D	0ACH-000001			
13A	J901030	BOLT	1	D	0ACH-000001			
13B	A590110	WASHER;PLANE	1	D	0ACH-000001			
15	4458890	TRIM;SEAL	1		0ACH-000001			
17	8085264	COVER	1		0ACH-000001			
17A	3092925	COVER	1		0ACH-000001			
17B	4449842	RUBBER	1		0ACH-000001			
18	8085266	COVER	1		0ACH-000001			
18A	8085265	COVER	1		0ACH-000001			
18B	4449916	RUBBER	1		0ACH-000001			
19	8085268	COVER	1		0ACH-000001			
19A	8085267	COVER	1		0ACH-000001			
19B	4460267	RUBBER	1		0ACH-000001			

INTER COOLER PIPING

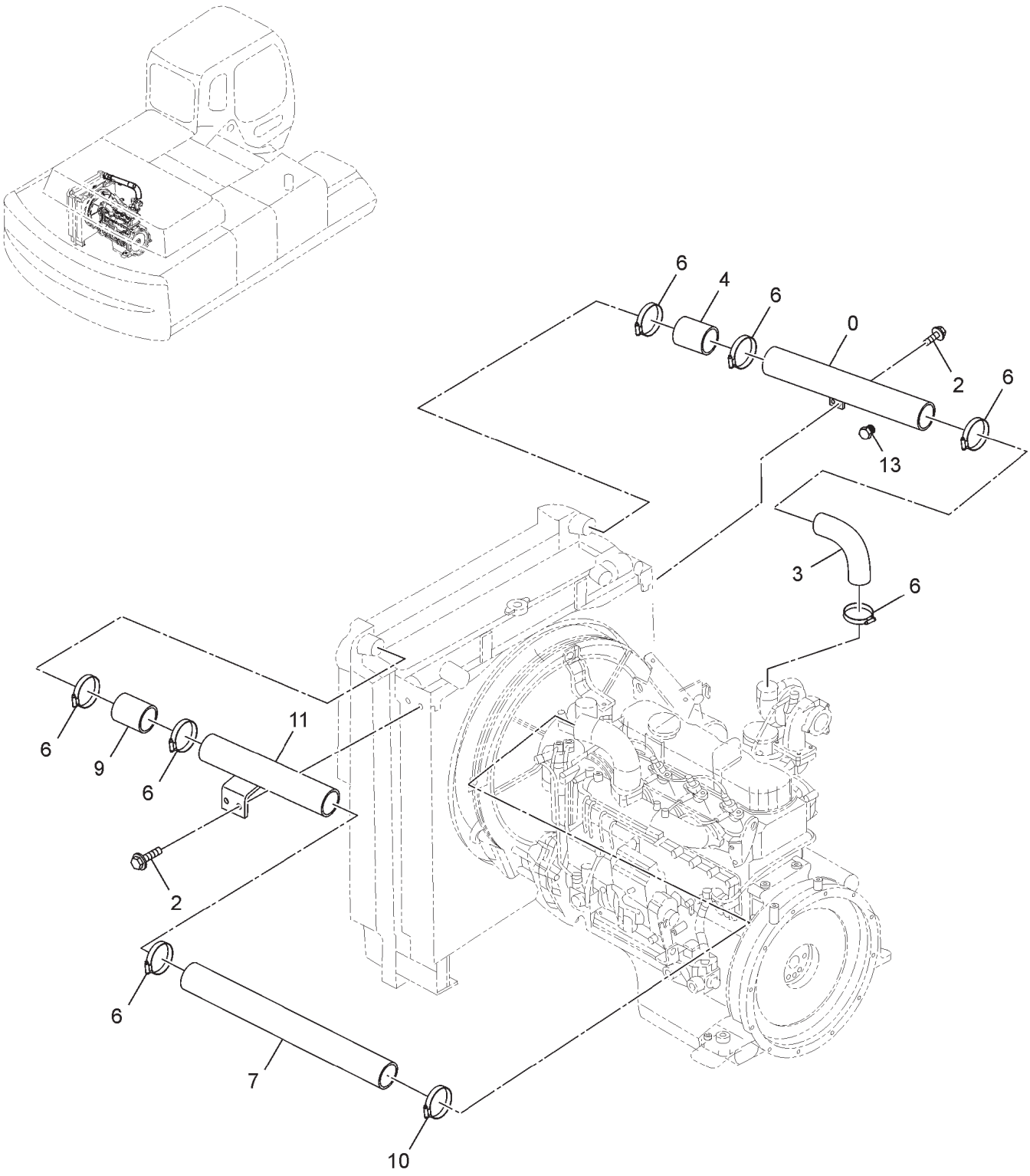

INTER COOLER PIPING

ITEM	PART NO.	PART NAME	QTY	S.C.	MACHINE SERIAL NO. ONWARDS	ICA	REPLACEABLE PART	
							PART NO.	QTY
--	**9191442**	**PIPING INTER COOLER**	**--**					
0	8080786	PIPE;AIR	1		0ACH-000001			
2	J021030	BOLT;SEMS	4		0ACH-000001			
3	4440186	HOSE;AIR	1		0ACH-000001			
4	4411793	HOSE AIR	1		0ACH-000001			
6	4504491	CLAMP;HOSE	7		0ACH-000001			
7	3090879	HOSE;AIR	1		0ACH-000001			
9	4446537	HOSE;AIR	1		0ACH-000001			
10	4503469	CLAMP HOSE	1		0ACH-000001			
11	8080495	PIPE;AIR	1		0ACH-000001			
13	94-2022	PLUG	1		0ACH-000001			

INTER COOLER NET

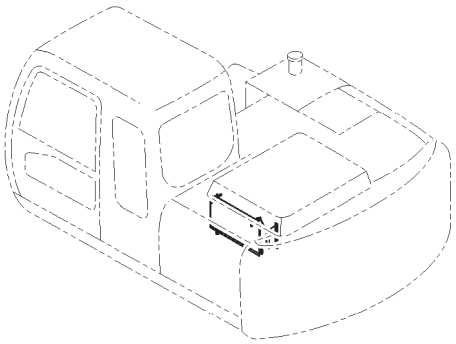

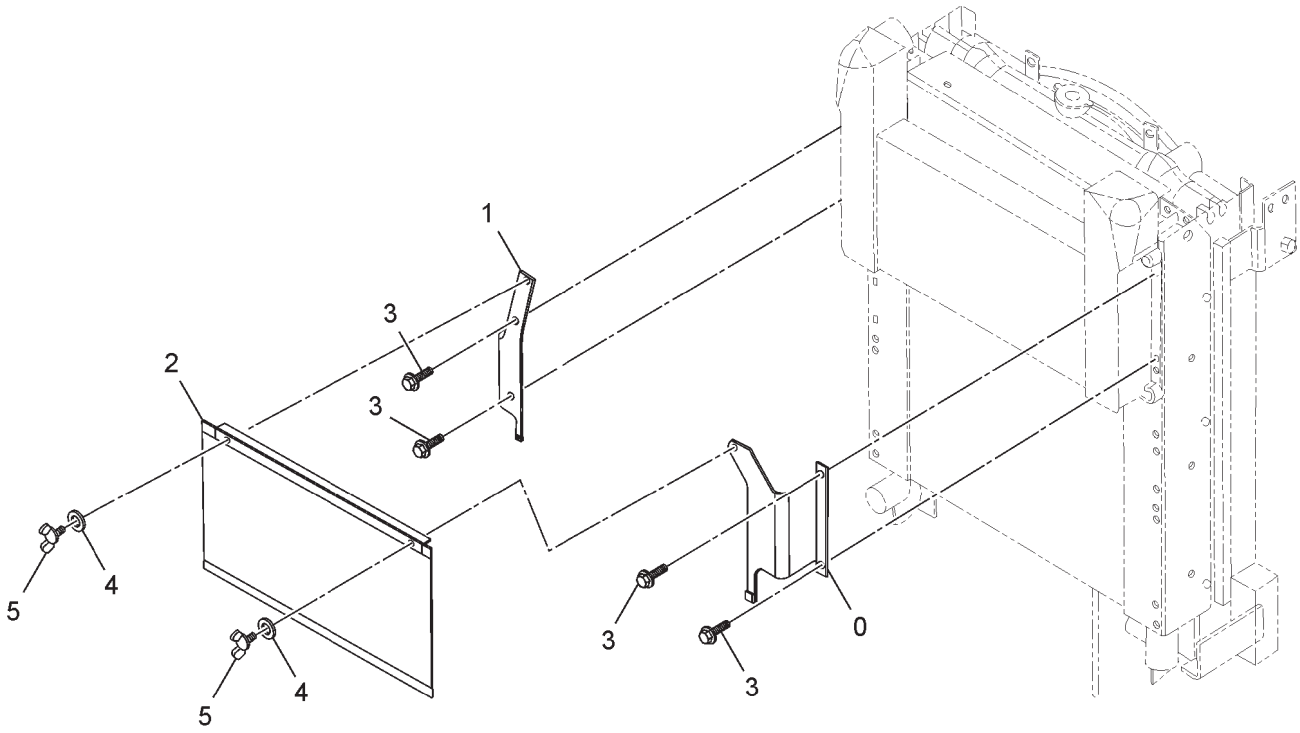

ITEM	PART NO.	PART NAME	QTY	S.C.	MACHINE SERIAL NO. ONWARDS	ICA	REPLACEABLE PART	
							PART NO.	QTY
0	4463189	BRACKET; (L)	1		0ACH-000001			
1	4454752	BRACKET; (R)	1		0ACH-000001			
2	4463190	NET	1		0ACH-000001			
3	J010816	BOLT; SEMS	4		0ACH-000001			
4	A590106	WASHER;PLANE	2		0ACH-000001			
5	M360614	BOLT;WING	2		0ACH-000001			

AUX. TANK ASSY.

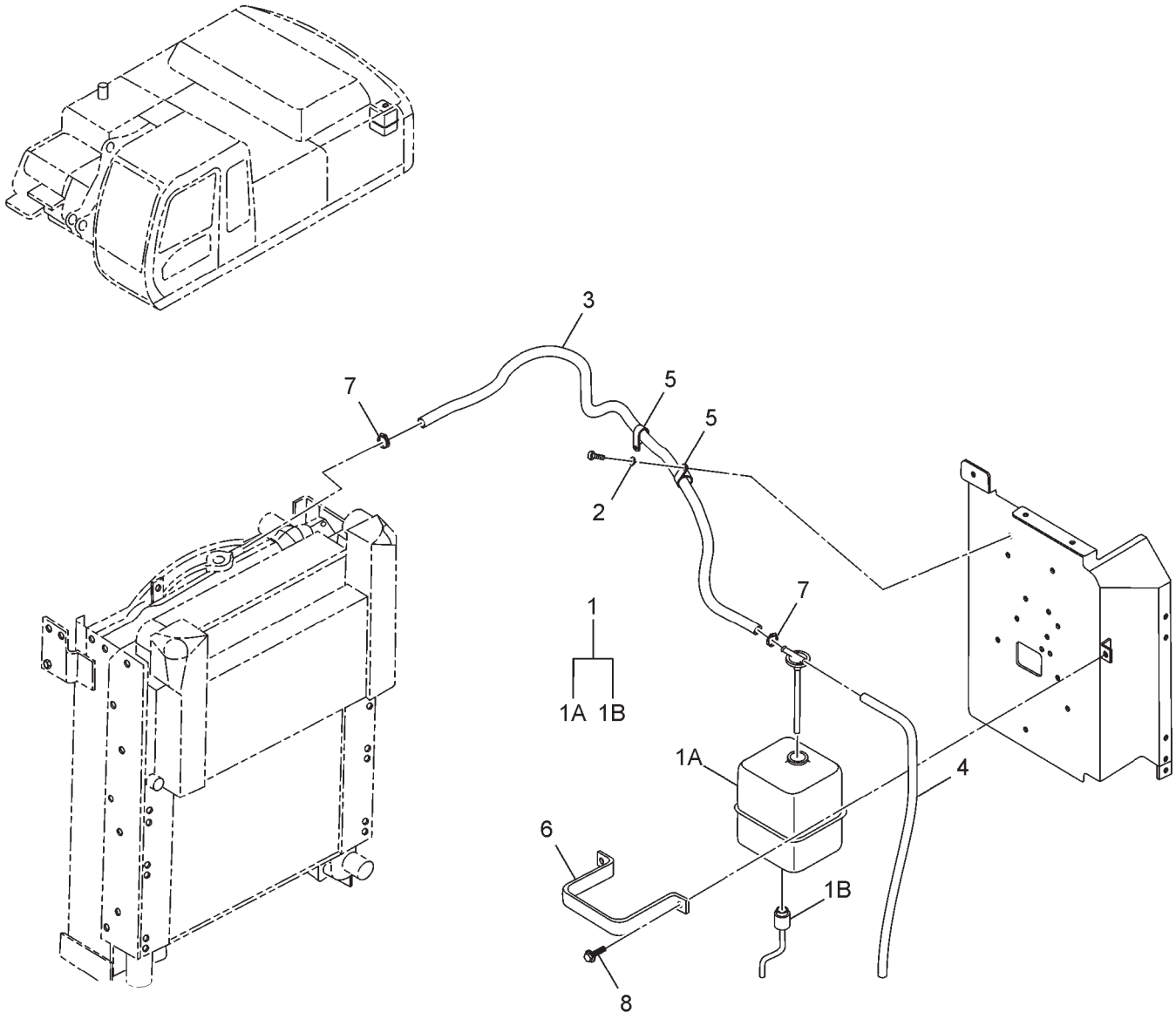

ITEM	PART NO.	PART NAME	QTY	S.C.	MACHINE SERIAL NO. ONWARDS	ICA	REPLACEABLE PART	
							PART NO.	QTY
--	**TE07275**	**AUX. TANK ASSY.**	**--**					
1	TD01304	AUX. WATER TANK ASSY.	1		0ACH-000001			
1A	4130139	TANK;WATER	1		0ACH-000001			
1B	4153251	SWITCH	1		0ACH-000001			
2	A590908	WASHER;SPRG	4		0ACH-000001			
3	4386060	HOSE;PLASTIC	1		0ACH-000001			
4	4386062	HOSE;WATER	1		0ACH-000001			
5	4055311	CLIP;BAND	1		0ACH-000001			
6	4180555	CLAMP	1		0ACH-000001			
7	4508575	CLAMP;HOSE	2		0ACH-000001			
8	J020820	BOLT;SEMS	2		0ACH-000001			

PRECLEANER PARTS

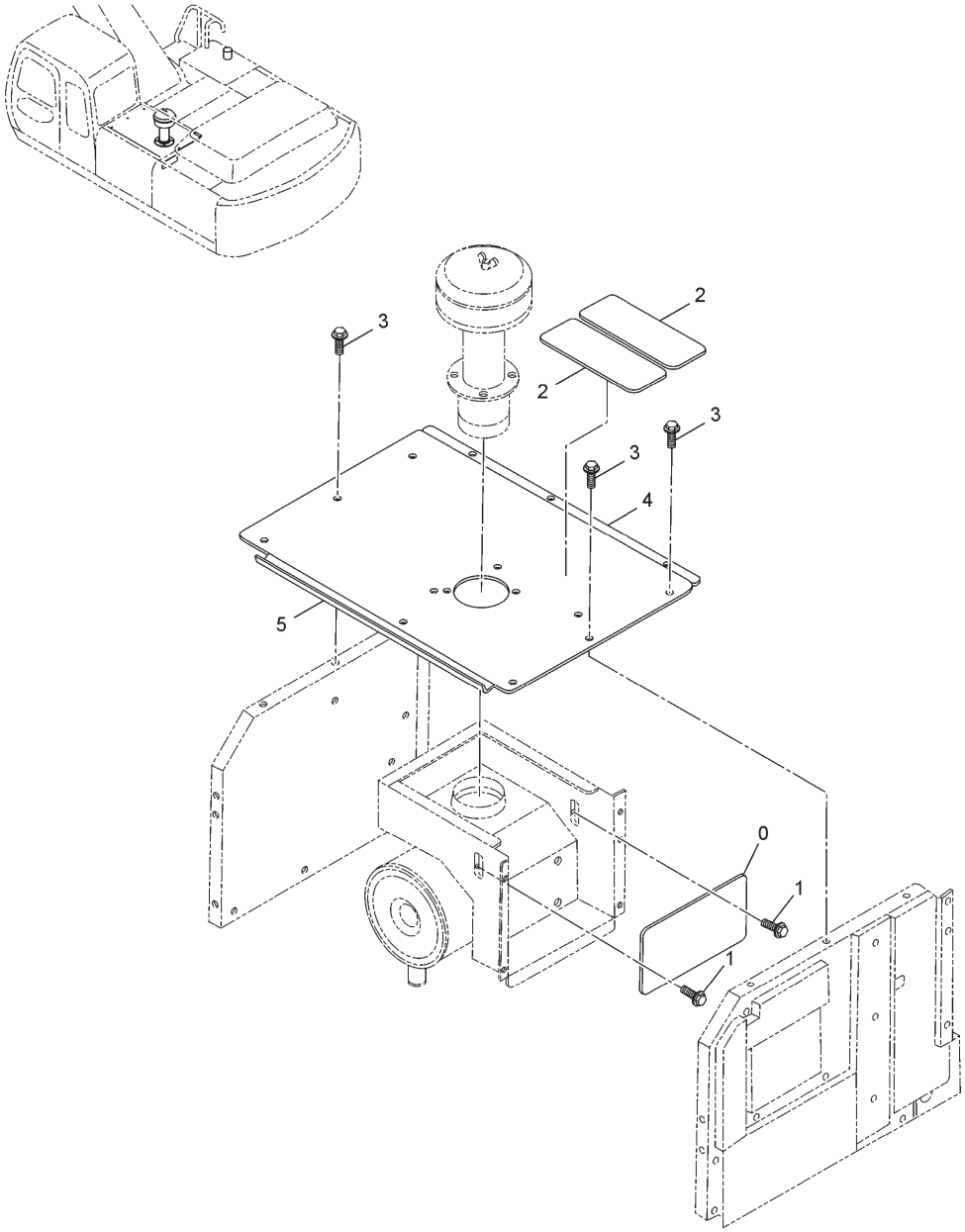

ITEM	PART NO.	PART NAME	QTY	S.C.	MACHINE SERIAL NO. ONWARDS	ICA	REPLACEABLE PART	
							PART NO.	QTY
--	**9205495**	**PRECLEANER PARTS**	**--**					
0	4462303	COVER	1		0ACH-000001			
1	J020820	BOLT;SEMS	2		0ACH-000001			
2	4073519	TAPE	2		0ACH-000001			
3	J021030	BOLT;SEMS	6		0ACH-000001			
4	7040468	COVER	1		0ACH-000001			
5	4447936	TRIM;SEAL	1		0ACH-000001			

PRE CLEANER

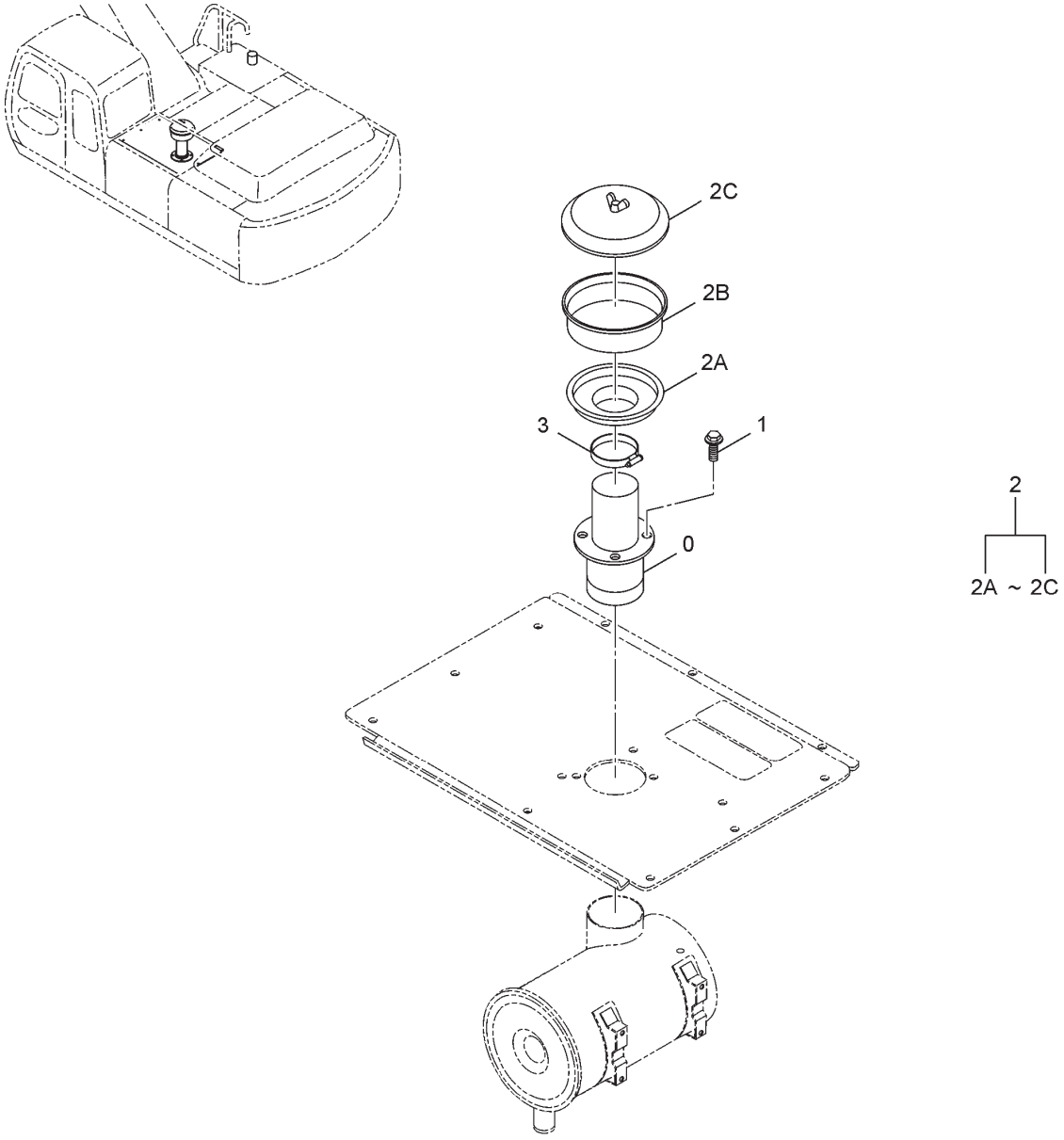

ITEM	PART NO.	PART NAME	QTY	S.C.	MACHINE SERIAL NO. ONWARDS	ICA	REPLACEABLE PART	
							PART NO.	QTY
--	**9201970**	**PRE CLEANER**	**--**					
0	8084309	PIPE	1		0ACH-000001			
1	J021030	BOLT;SEMS	4		0ACH-000001			
2	4090405	CLEANER;PRE	1		0ACH-000001			
2A	4644830	SLEEVE ASSEMBLY	1		0ACH-000001			
2B	4142154	BODY	1		0ACH-000001			
2C	4644831	COVER	1		0ACH-000001			
3	4245194	CLAMP;HOSE	1		0ACH-000001			

AIR CLEANER ASSEMBLY

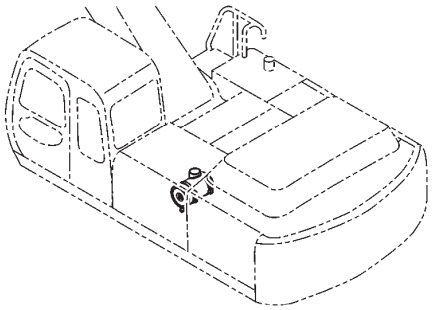

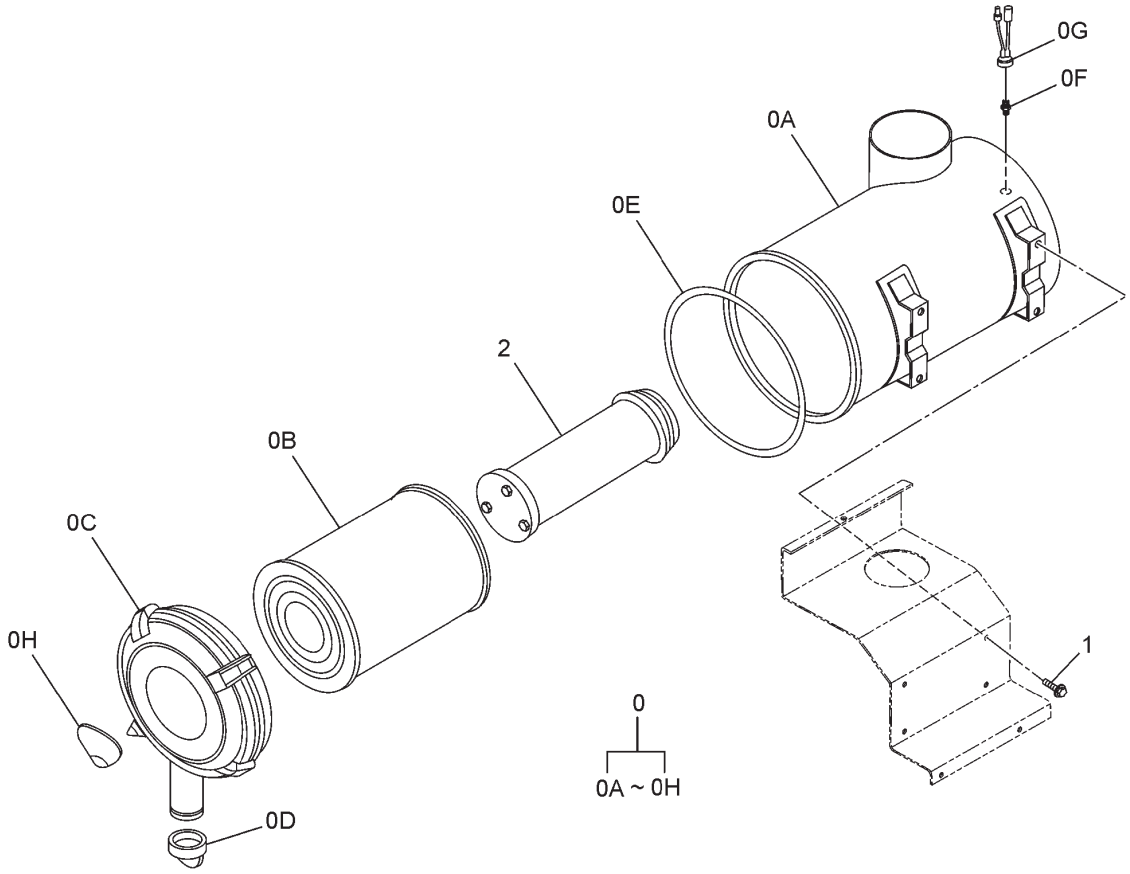

ITEM	PART NO.	PART NAME	QTY	S.C.	MACHINE SERIAL NO. ONWARDS	ICA	REPLACEABLE PART	
							PART NO.	QTY
--	**9196463**	**ASSY. AIR CLEANER**	**--**					
0	YA00017558	CLEANER AIR	1		0ACH-000001			
0A	4446916	BODY	1		0ACH-000001			
0B	4459549	ELEMENT	1		0ACH-000001			
0C	4455586	COVER	1		0ACH-000001			
0D	4453910	VALVE	1		0ACH-000001			
0E	4456352	GASKET	1		0ACH-000001			
0F	D911521	ADAPTER	1		0ACH-000001			
0G	4224238	INDICATOR	1		0ACH-000001			
0H	4453912	NAME PLATE	1		0ACH-000001			
1	J271025	BOLT; SEMS	4		0ACH-000001			
2	4459548	ELEMENT FILTER	1		0ACH-000001			

AIR CLEANER PARTS

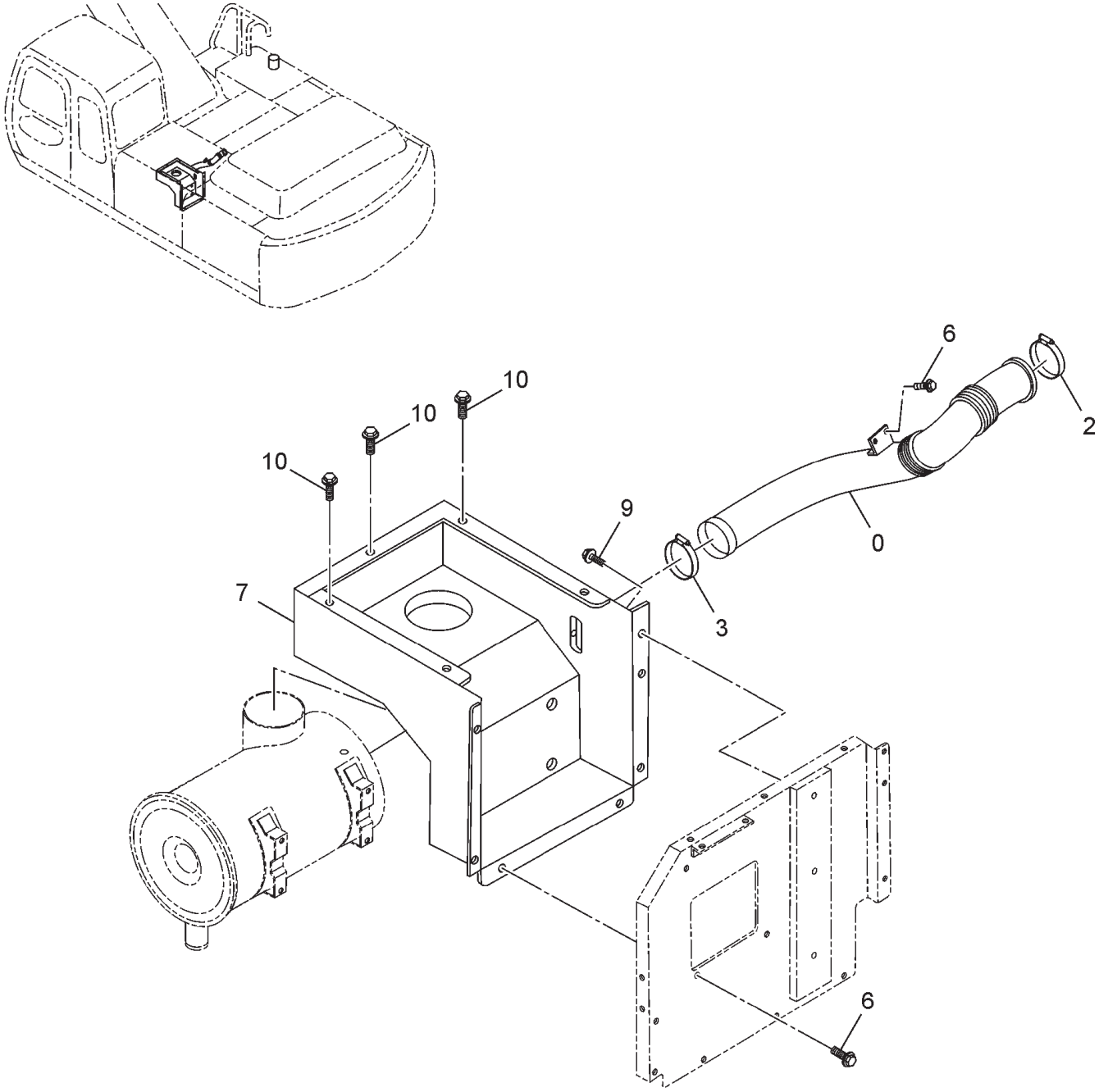

ITEM	PART NO.	PART NAME	QTY	S.C.	SERIAL NO.	ICA	REPLACEABLE PART	
							PART NO.	QTY
--	**9191445**	**PARTS AIR CLEANER**	**--**					
0	4439120	DUCT;AIR	1		0ACH-000001			
2	E13805087	CLAMP;HOSE	1		0ACH-000001			
3	4245194	CLAMP;HOSE	1		0ACH-000001			
6	J021030	BOLT;SEMS	6		0ACH-000001			
7	7039334	COVER	1		0ACH-000001			
9	J021025	BOLT;SEMS	2		0ACH-000001			
10	J031030	BOLT;SEMS	5		0ACH-000001			

MUFFLER ASSY.

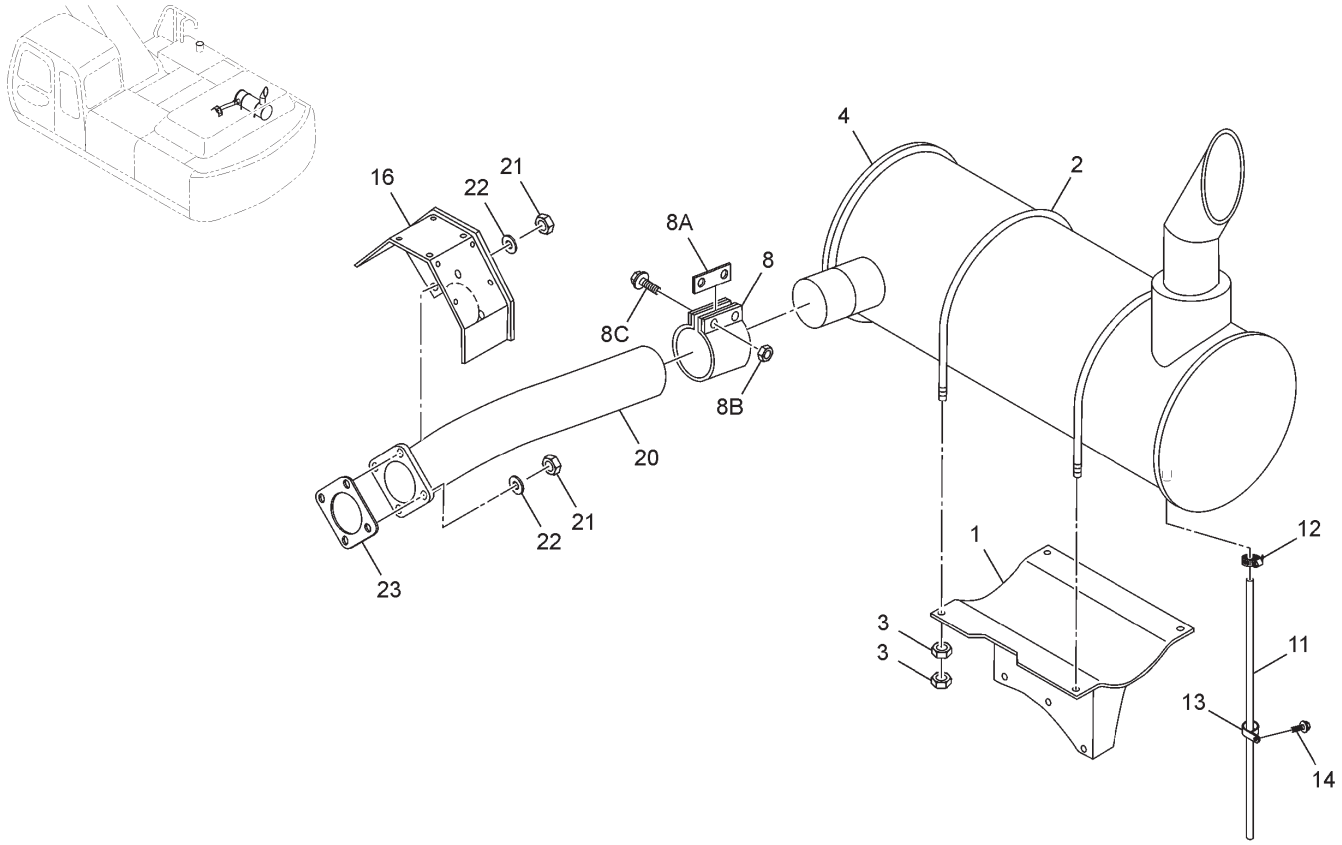

ITEM	PART NO.	PART NAME	QTY	S.C.	MACHINE SERIAL NO. ONWARDS	ICA	REPLACEABLE PART	
							PART NO.	QTY
--	**9191443**	**MUFFLER ASSY.**	**--**					
1	7037273	BRACKET	1		0ACH-000001			
2	4420083	BOLT;U	2		0ACH-000001			
3	J950010	NUT	8		0ACH-000001			
8	4190587	CLAMP	1		0ACH-000001			
8A	4162835	GASKET	1		0ACH-000001			
8B	4162837	NUT	2		0ACH-000001			
8C	4162836	BOLT	2		0ACH-000001			
11	4297136	TUBE	1		0ACH-000001			
12	4396451	CLAMP;HOSE	1		0ACH-000001			
13	4344303	CLIP	1		0ACH-000001			
14	J011020	BOLT; SEMS	1		0ACH-000001			
16	8081101	COVER	1		0ACH-000001			
20	8081308	PIPE;EXHAUST	1		0ACH-000001			
21	M521008	NUT	4		0ACH-000001			
22	A590910	SPR.WASHER	4		0ACH-000001			
23	4368562	GASKET	1		0ACH-000001			
24	4721275	MUFFLER	1		0ACH-000203			

PARTS FUEL TANK

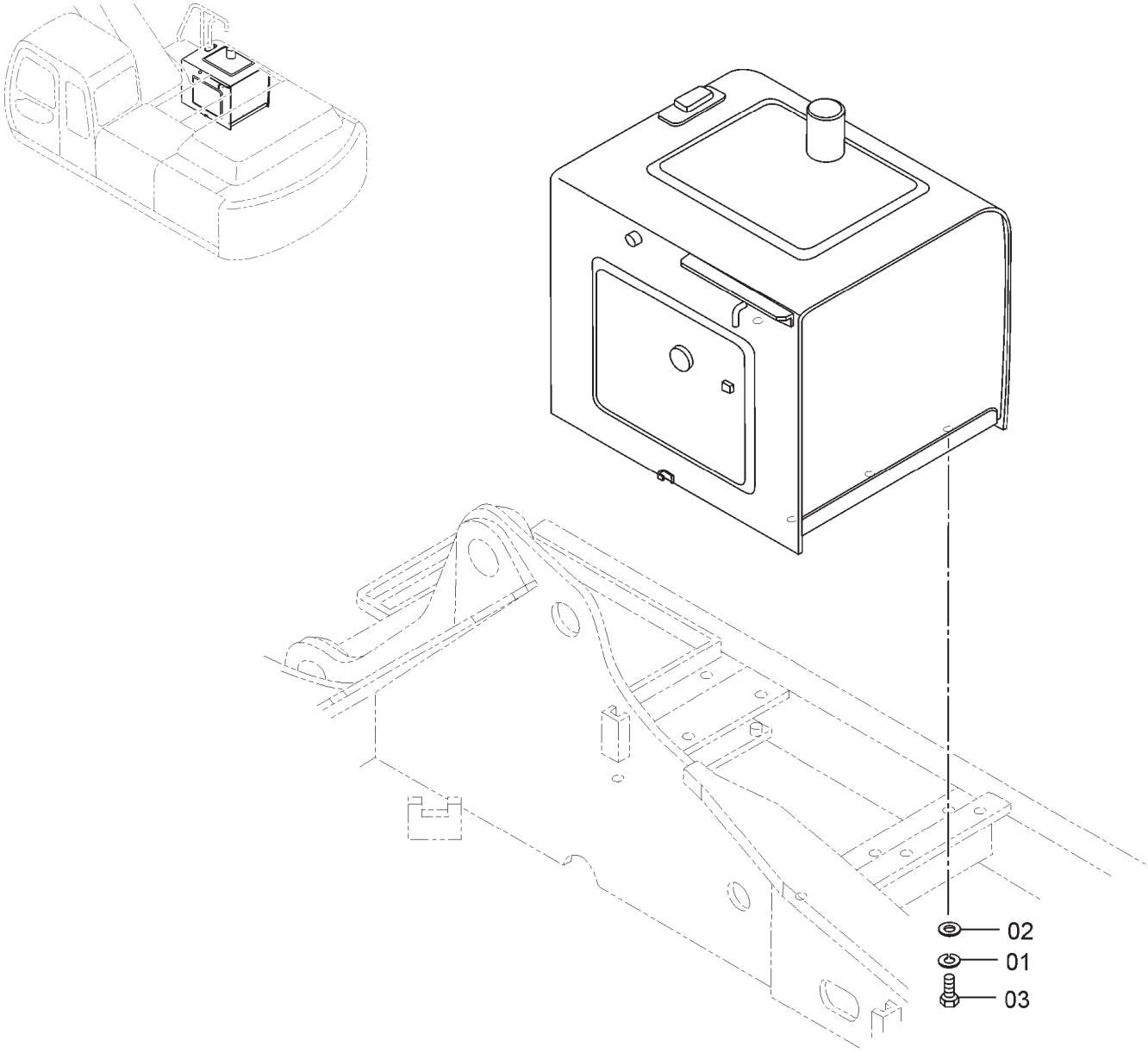

ITEM	PART NO.	PART NAME	QTY	S.C.	MACHINE SERIAL NO. ONWARDS	ICA	REPLACEABLE PART	
							PART NO.	QTY
--	**9160137**	**PARTS FUEL TANK MOUNTING**	**--**					
1	A590916	WASHER;SPRING	6		0ACH-000001			
2	4114405	WASHER	6		0ACH-000001			
3	J901645	BOLT	6		0ACH-000001			

FUEL TANK

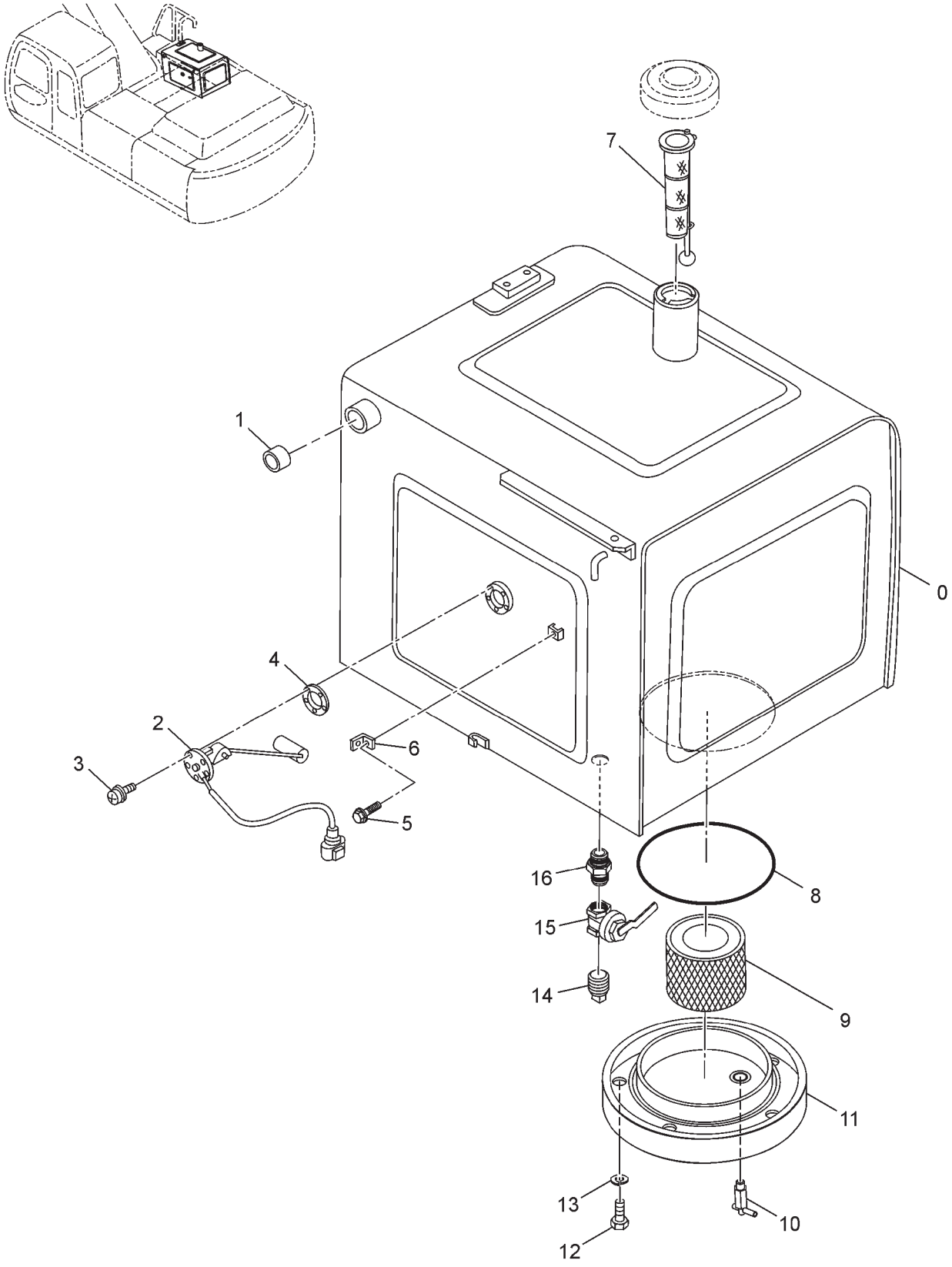

FUEL TANK

ITEM	PART NO.	PART NAME	QTY	S.C.	MACHINE SERIAL NO. ONWARDS	ICA	REPLACEABLE PART	
							PART NO.	QTY
--	**9191448**	**FUEL TANK**	**--**					
0	5007193	TANK;FUEL	1		0ACH-000001			
1	94-2013	PLUG	1		0ACH-000001			
2	4257128	FLOAT	1		0ACH-000001			
3	J450510	SCREW;SEMS	5		0ACH-000001			
4	4269607	PACKING	1		0ACH-000001			
5	J271016	BOLT; SEMS	1		0ACH-000001			
6	4190261	CLIP	1		0ACH-000008			
7	TE00188	FILTER	1		0ACH-000001			
8	A810160	O-RING	1		0ACH-000001			
9	TD03162	FUEL STRAINER	1		0ACH-000001			
10	9726772	PIPE	1		0ACH-000001			
11	8067496	COVER	1		0ACH-000001			
12	J901020	BOLT	6		0ACH-000001			
13	A590910	SPR.WASHER	6		0ACH-000001			
14	94-2011	PLUG	1		0ACH-000001			
15	4374265	VALVE;BALL	1		0ACH-000001			
16	94-1901	ADAPTER;S	1		0ACH-000001			

FUEL DOUBLE FILTER

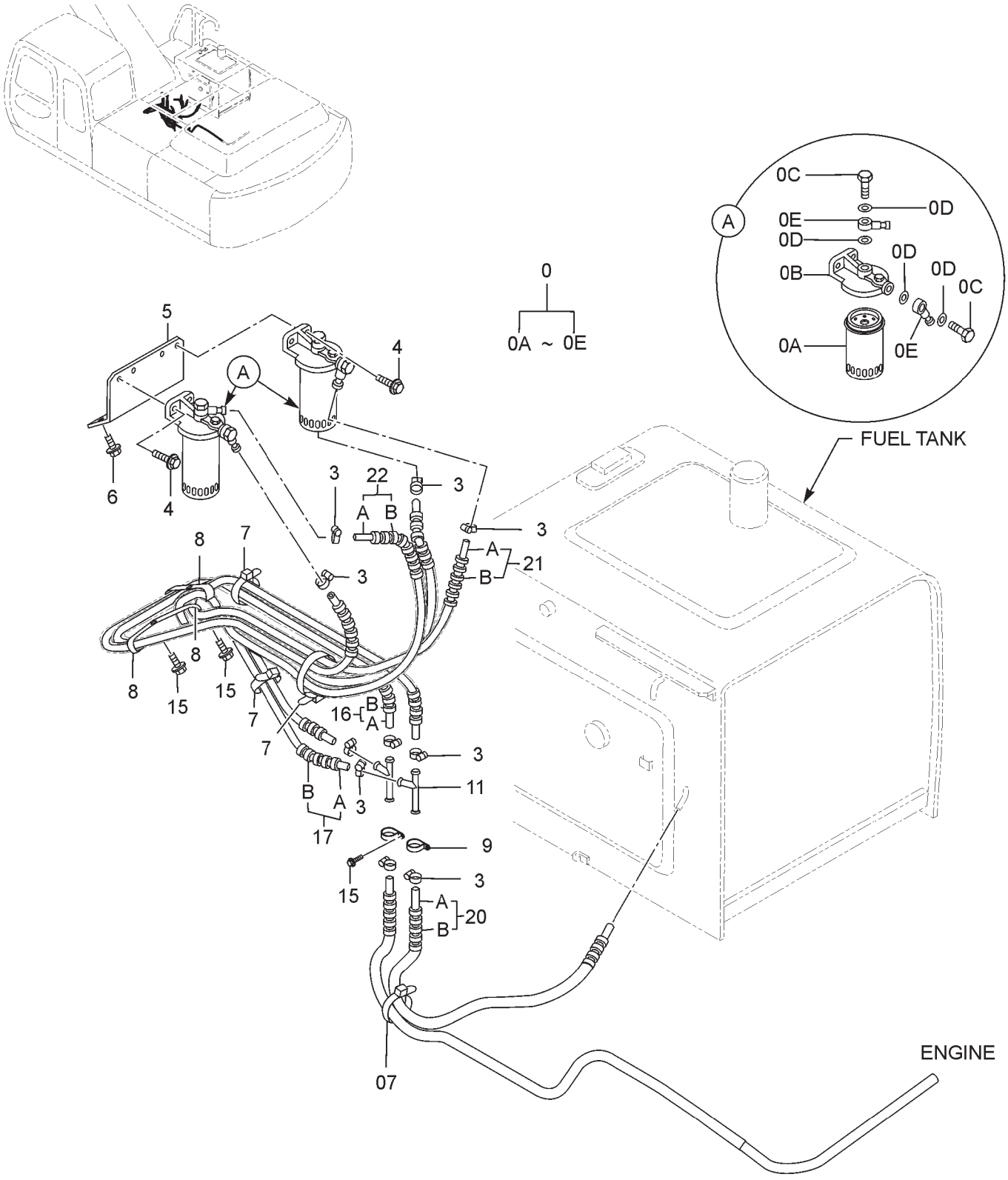

FUEL DOUBLE FILTER

ITEM	PART NO.	PART NAME	QTY	S.C.	MACHINE SERIAL NO. ONWARDS	ICA	REPLACEABLE PART	
							PART NO.	QTY
--	**9201713**	**FUEL DOUBLE FILTER**	**--**					
0	4335136	FILTER;FUEL	2		0ACH-000001			
0A	4326739	FILTER;FUEL	1		0ACH-000001			
0B	4326807	HEAD	1		0ACH-000001			
0C	4326740	BOLT	2		0ACH-000001			
0D	4326741	GASKET	4		0ACH-000001			
0E	4326742	PIPE	2		0ACH-000001			
3	4514700	CLIP;HOSE	10		0ACH-000001			
4	J021030	BOLT;SEMS;M10 X	4		0ACH-000001			
5	8073102	BRACKET	1		0ACH-000001			
6	J021025	BOLT;SEMS M10X	3		0ACH-000001			
7	4055312	CLIP;BAND 250	4		0ACH-000001			
8	4190266	CLIP 022.0X2	4		0ACH-000001			
9	4190261	CLIP 10X1	2		0ACH-000001			
11	9749682	PIPE	2		0ACH-000035			
15	J011020	BOLT; SEMS	3		0ACH-000001			
16	9176470	HOSE;FUEL	1		0ACH-000001			
16A	4404753	HOSE;FUEL	1		0ACH-000001			
16B	4291380	TUBE	1		0ACH-000001			
17	9176471	HOSE;FUEL	1		0ACH-000001			
17A	4404755	HOSE;FUEL	1		0ACH-000001			
17B	4362471	TUBE	1		0ACH-000001			
20	9211225	HOSE;FUEL	1		0ACH-000001			
20A	4404757	HOSE;FUEL	1		0ACH-000001			
20B	4332697	TUBE	1		0ACH-000001			
21	9211226	HOSE;FUEL	1		0ACH-000001			
21A	4404753	HOSE;FUEL	1		0ACH-000001			
21B	4291380	TUBE	1		0ACH-000001			
22	9109189	HOSE;FUEL	1		0ACH-000001			
22A	4291379	HOSE	1		0ACH-000001			
22B	4291380	TUBE	1		0ACH-000001			

FUEL PIPING

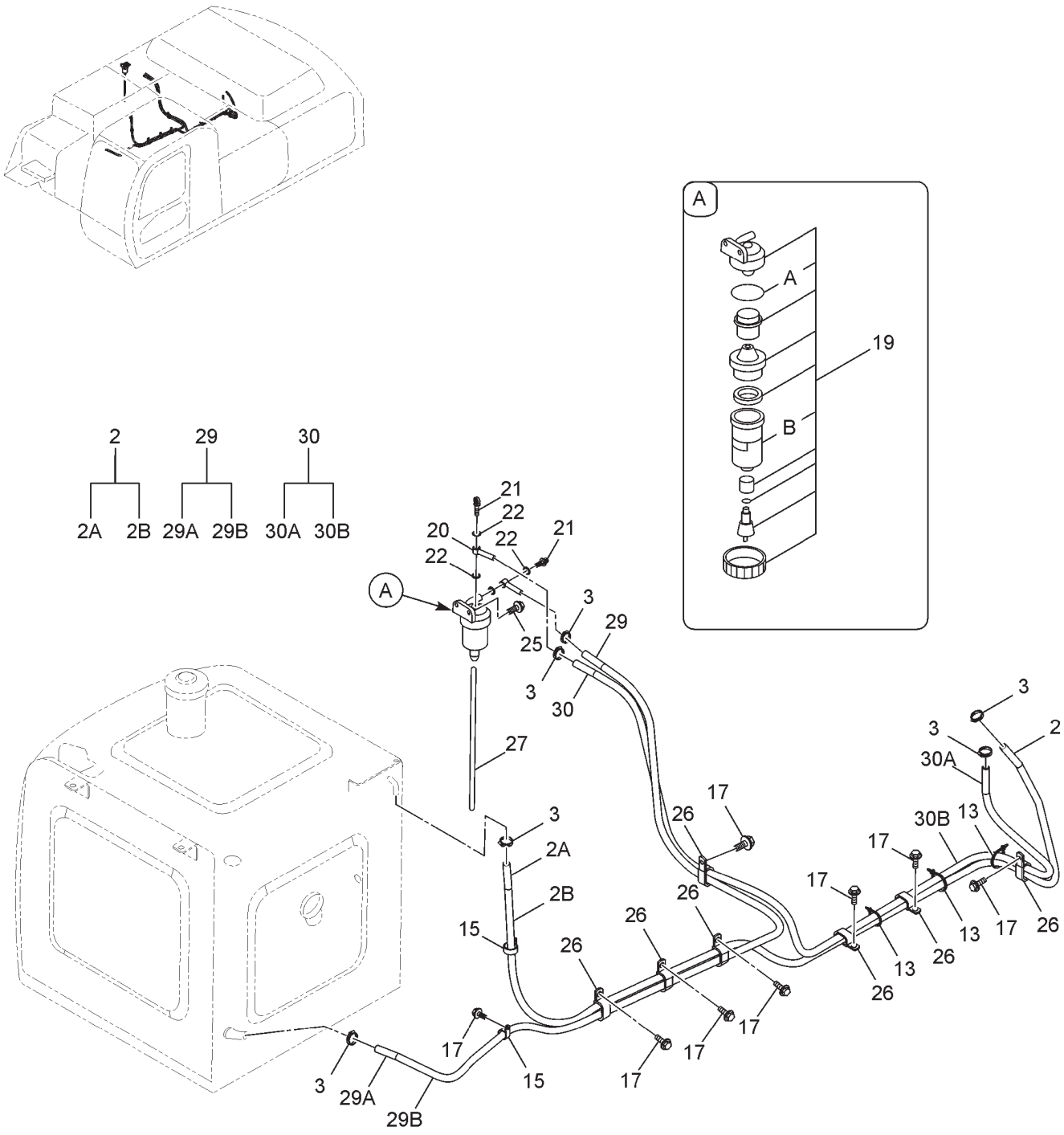
2
29
30
2A
2B
29A
29B
30A
30B
A
19
B
21
22
20
25
3
29
30
27
2A
2B
15
26
17
13
29A
29B

FUEL PIPING

ITEM	PART NO.	PART NAME	QTY	S.C.	SERIAL NO.	ICA	REPLACEABLE PART	
							PART NO.	QTY
--	**9191447**	**FUEL PIPING**	**--**					
2	9196546	HOSE	1		0ACH-000001			
2A	4443358	HOSE	1		0ACH-000001			
2B	4282220	TUBE	1		0ACH-000001			
3	4514700	CLIP;HOSE	6		0ACH-000001			
13	4055312	CLIP;BAND	3		0ACH-000001			
15	4190277	CLIP	2		0ACH-000001			
17	J011020	BOLT; SEMS	8		0ACH-000001			
19	4461209	SEPERATOR	1		0ACH-000001			
19A	4621869	O-RING	1		0ACH-000001			
19B	4621774	CASE	1		0ACH-000001			
20	4452162	PIPE;FUEL	2		0ACH-000001			
21	4452163	BOLT;EYE	2		0ACH-000001			
22	4452165	PACKING	4		0ACH-000001			
25	J020825	BOLT;SEMS	2		0ACH-000001			
26	4192034	CLIP	7		0ACH-000001			
27	4433333	HOSE; VINYL	1		0ACH-000001			
29	9211224	HOSE	1		0ACH-000001			
29A	4374345	HOSE	1		0ACH-000001			
29B	4374347	TUBE	1		0ACH-000001			
30	9168326	HOSE	1		0ACH-000001			
30A	4047044	HOSE	1		0ACH-000001			
30B	4397947	TUBE	1		0ACH-000001			

FILTER PIPING

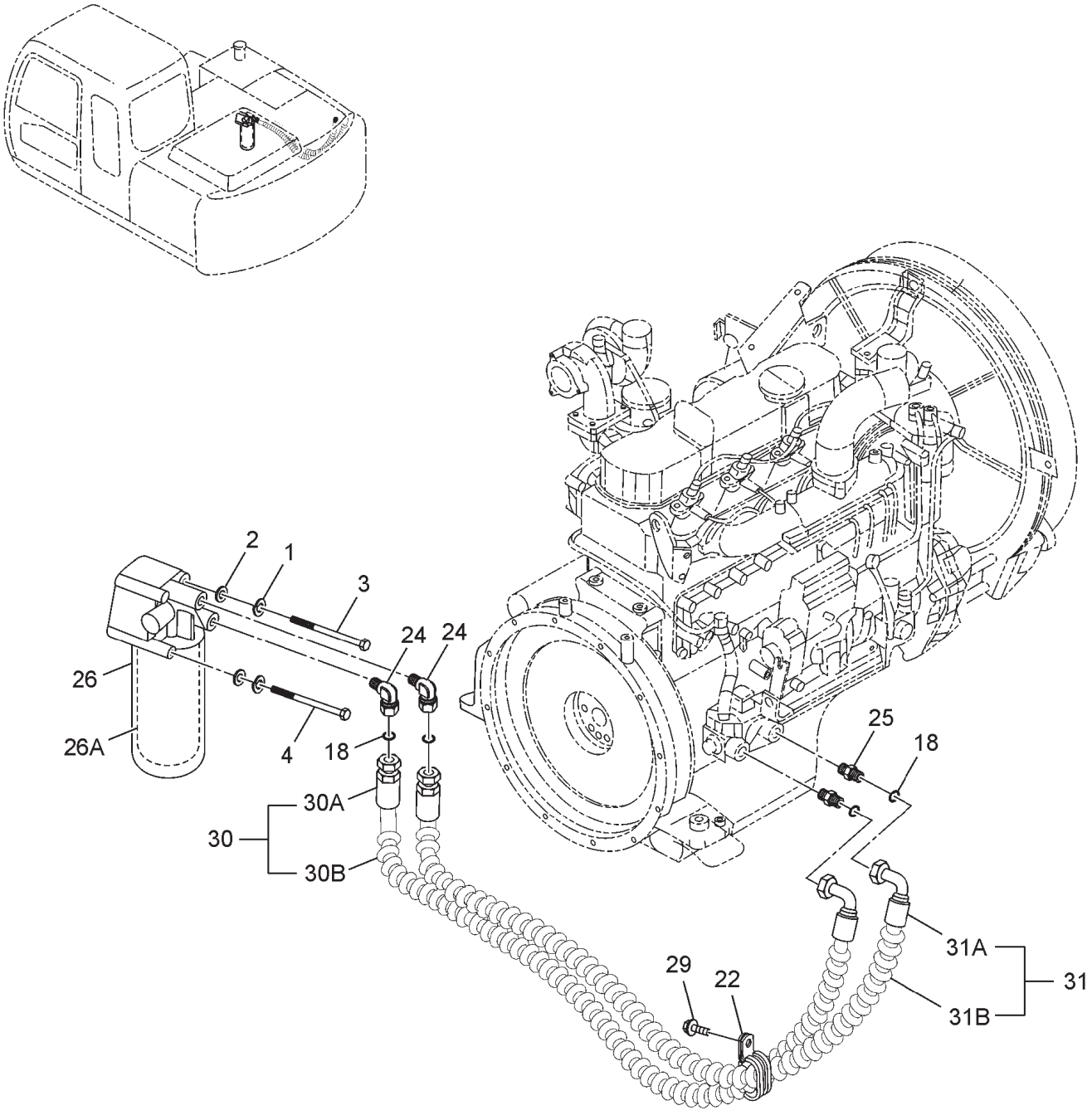

FILTER PIPING

ITEM	PART NO.	PART NAME	QTY	S.C.	SERIAL NO.	ICA	REPLACEABLE PART	
							PART NO.	QTY
--	**9191439**	**PIPING; FILTER**	**--**					
1	A590910	SPR.WASHER	4		0ACH-000001			
2	A590110	WASHER;PLANE	4		0ACH-000001			
3	J901004	BOLT	2		0ACH-000001			
4	J901010	BOLT	2		0ACH-000001			
18	4430912	O-RING	4		0ACH-000001			
22	4411911	CLIP	1		0ACH-000001			
24	4473870	ADAPTER;S	2		0ACH-000001			
24A	4153103	O-RING	1		0ACH-000001			
25	4473871	ADAPTER;S	2		0ACH-000001			
25A	4153103	O-RING	1		0ACH-000001			
26	4485262	FILTER;OIL	1	Z	0ACH-000001			
26A	4484495	ENGINE OIL FILTER	1	Z	0ACH-000001			
29	J271030	BOLT; SEMS	1		0ACH-000001			
30	9243514	HOSE ASSY	1		0ACH-000001			
30A	4625787	HOSE;OIL	1		0ACH-000001			
30B	4446406	PROTECTOR	1		0ACH-000001			
31	9243516	HOSE ASSY	1		0ACH-000001			
31A	4625788	HOSE;OIL	1		0ACH-000001			
31B	4446406	PROTECTOR	1		0ACH-000001			

FUEL FEED PUMP

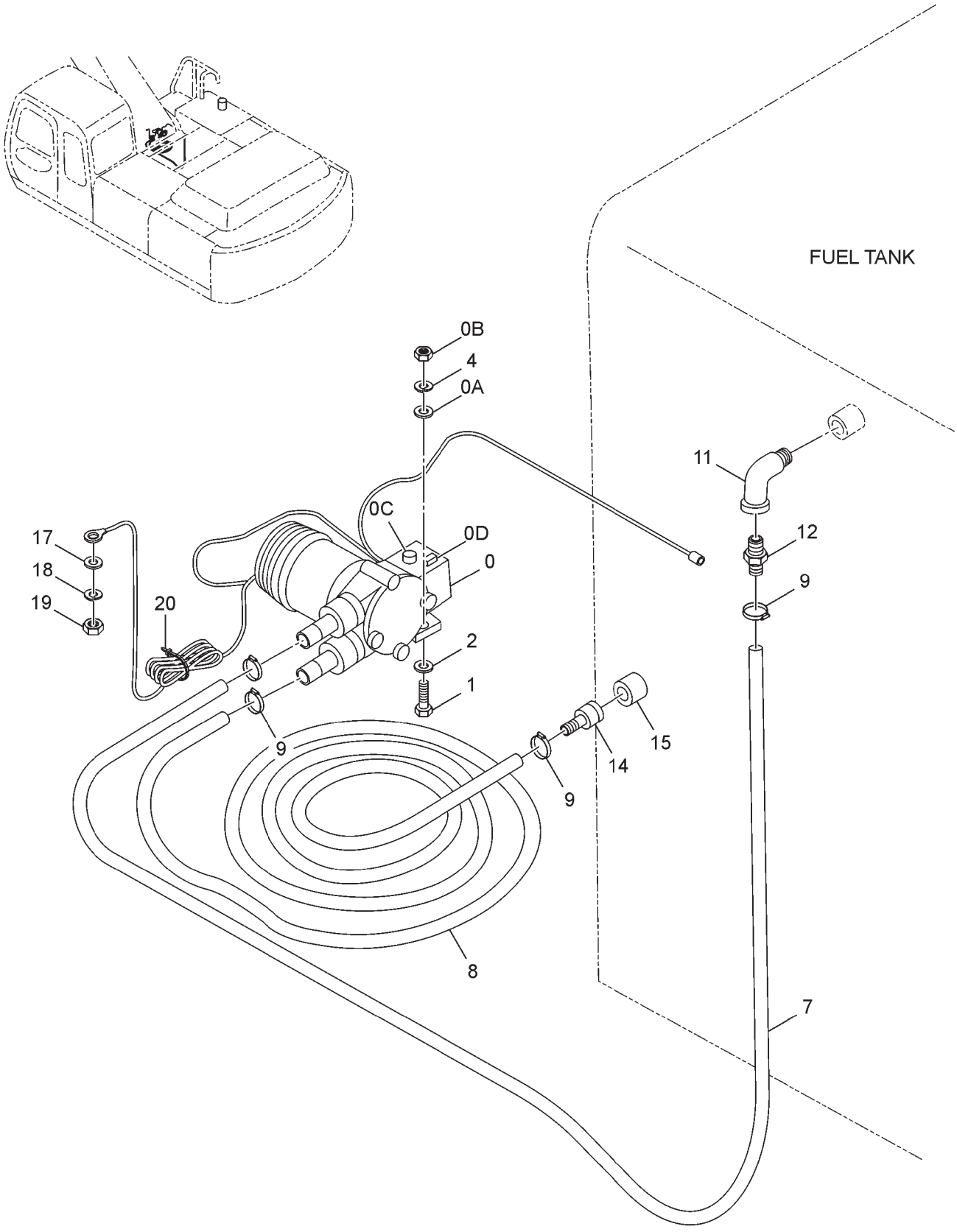

FUEL FEED PUMP

ITEM	PART NO.	PART NAME	QTY	S.C.	MACHINE SERIAL NO. ONWARDS	ICA	REPLACEABLE PART	
							PART NO.	QTY
--	**9163818**	**FUEL FEED PUMP**	**--**					
0	TD06544	FUEL FEED PUMP	1		0ACH-000001			
0A	4142952	WASHER	3		0ACH-000001			
0B	M500807	NUT	3		0ACH-000001			
0C	4611622	SWITCH	1	#	0ACH-000001			
0D	4611623	FUSE	1	#	0ACH-000001			
1	J900835	BOLT	3		0ACH-000001			
2	A590108	WASHER;PLANE	3		0ACH-000001			
4	A590908	WASHER;SPRG	3		0ACH-000001			
7	4390401	HOSE	1		0ACH-000001			
8	4051160	HOSE;FUEL	1		0ACH-000001			
9	4504367	CLAMP;HOSE	4		0ACH-000001			
11	94-0632	ELBOW;S	1		0ACH-000001			
12	4004589	JOINT	1		0ACH-000001			
17	A590106	WASHER;PLANE	1		0ACH-000001			
18	A590906	WASHER;SPRING	1		0ACH-000001			
19	M500605	NUT	1		0ACH-000001			
20	4259220	CLIP	1		0ACH-000001			

TANK OIL

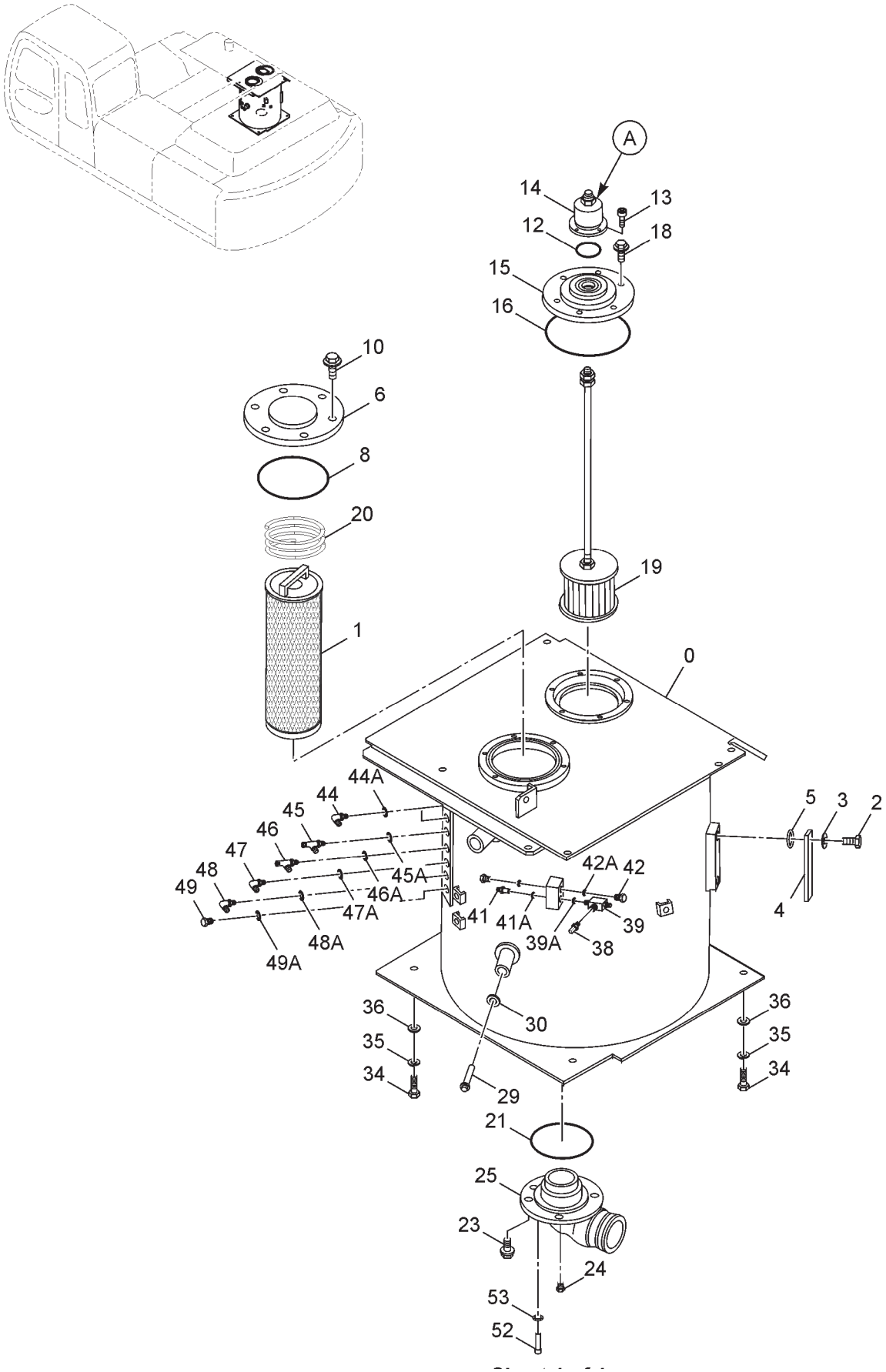
A
14
13
12
18
15
16
10
6
8
20
19
1
0
44A
44
45
46
47
48
49
45A
46A
47A
48A
49A
42A
42
41
41A
39
39A
38
5
3
2
4
36
35
34
30
29
21
25
23
24
53
52

TANK OIL

ITEM	PART NO.	PART NAME	QTY	S.C.	MACHINE SERIAL NO. ONWARDS	ICA	REPLACEABLE PART	
							PART NO.	QTY
--	**9191450**	**TANK OIL**	--					
0	TA01679	TANK;OIL	1		0ACH-000001			
1	YA00016055	FILTER ELEMENT (HYDRAULIC)	1		0ACH-000004			
2	J900635	HEX BOLT	8		0ACH-000001			
3	A590906	WASHER;SPRING	8		0ACH-000001			
4	TD02747	ASSY;VIEW GLASS	1		0ACH-000001			
4A	TD02707	BLOCK	2		0ACH-000001			
4B	TE04386	TUBE;VIEW GLASS	1		0ACH-000001			
4C	TE04408	O-RING	4		0ACH-000001			
5	Z957366	O-RING	2		0ACH-000001			
6	4440802	COVER	1		0ACH-000001			
8	A810190	O-RING	1		0ACH-000001			
10	J271035	BOLT; SEMS	6		0ACH-000001			
12	A810060	O-RING	1		0ACH-000001			
13	J780616	BOLT; SOCKET	4		0ACH-000001			
14	4434017	BREATHER; AIR	1		0ACH-000001			
15	8060810	COVER	1		0ACH-000001			
16	A810160	O-RING	1		0ACH-000001			
18	J011022	BOLT	6		0ACH-000001			
19	4385915	FILTER;SUCTION	1		0ACH-000001			
20	4472673	SPRING	1		0ACH-000001			
21	A810165	O-RING	1		0ACH-000001			
23	J271030	BOLT; SEMS	6		0ACH-000001			
24	94–2011	PLUG EX 800	1		0ACH-000001			
25	2023377	PIPE SUCTION	1		0ACH-000001			
29	4387143	VALVE	1		0ACH-000001			
30	Z991718	RING;RETAINING	1		0ACH-000001			
34	J921850	BOLT	4		0ACH-000001			
35	J257218	WASHER;SPRING	4		0ACH-000001			
36	J222018	WASHER	4		0ACH-000001			
38	4436535	SENSOR; PRESSURE	1		0ACH-000001			
39	4364784	TEE	1		0ACH-000001			
39A	Z957366	O-RING	1		0ACH-000001			
41	4255792	ADAPTER;S	1		0ACH-000001			
41A	Z957366	O-RING	1		0ACH-000001			
42	A885002	PLUG	2		0ACH-000001			
42A	Z957366	O-RING	1		0ACH-000001			
44	A852322	ELBOW;S	2		0ACH-000001			
44A	Z957366	O-RING	1		0ACH-000001			
45	4239713	TEE;S	1		0ACH-000001			
45A	4509180	O-RING	1		0ACH-000001			
46	A852433	TEE;S	1		0ACH-000001			
46A	4509180	O-RING	1		0ACH-000001			
47	A852334	ELBOW;S	1		0ACH-000001			
47A	4509180	O-RING	1		0ACH-000001			
48	A852332	ELBOW;S	1		0ACH-000001			
48A	4509180	O-RING	1		0ACH-000001			
49	A885003	PLUG	1		0ACH-000001			
49A	4509180	O-RING	1		0ACH-000001			
52	4250260	SENSOR	1		0ACH-000001			
53	4250261	GASKET	1		0ACH-000001			

SWING DEVICE

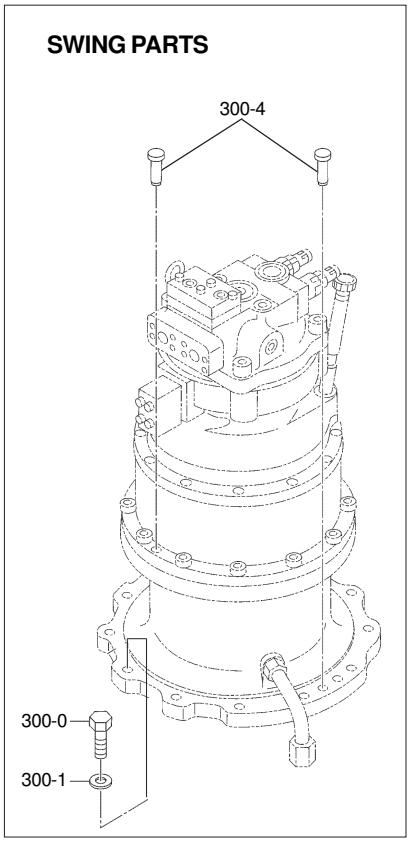

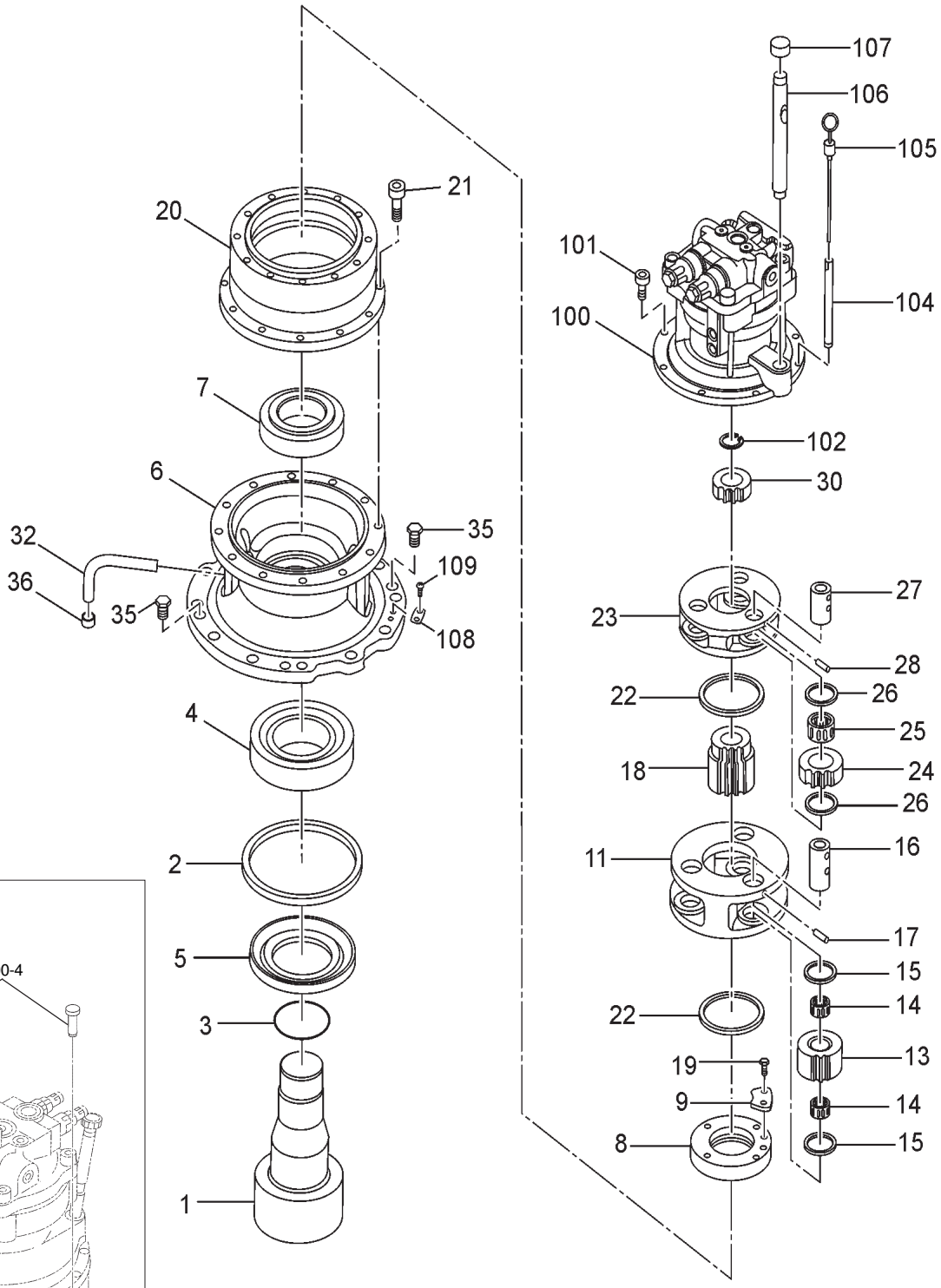

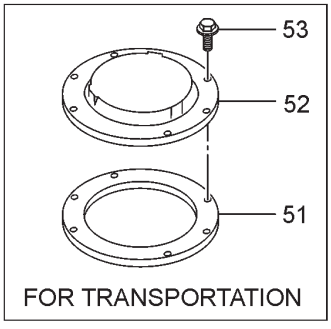

SWING DEVICE

ITEM	PART NO.	PART NAME	QTY	S.C.	MACHINE SERIAL NO. ONWARDS	ICA	REPLACEABLE PART	
							PART NO.	QTY
--	**9195215**	**SWING DEVICE ASSY.**	**--**					
00	9186784	SWING DEVICE ASSY. WITH MOTOR	1					
1	2044704	SHAFT;PROP.	1		0ACH-000001			
2	3088071	SLEEVE	1		0ACH-000001			
3	4412650	O-RING	1		0ACH-000001			
4	4430716	BRG;ROL	1		0ACH-000001			
5	4430716	SEAL;OIL	1		0ACH-000001			
6	1027932	HOUSING	1		0ACH-000001			
7	4402481	BRG;ROL	1		0ACH-000001			
8	3101122	NUT	1		0ACH-000001			
9	4430563	PLATE;LOCK	1		0ACH-000001			
11	2050998	CARRIER	1		0ACH-000001			
13	3088069	GEAR; PLANETARY	3		0ACH-000001			
14	4445254	BRG;NEEDLE	6		0ACH-000001			
16	4430714	PIN	3		0ACH-000001			
17	4404947	PIN SPRING	3		0ACH-000001			
18	3075692	GEAR; SUN	2		0ACH-000001			
19	J901016	BOLT	1		0ACH-000001			
20	1027953	GEAR; RING	1		0ACH-000001			
21	M342050	BOLT; SOCKET	12		0ACH-000001			
22	4194454	PLATE; THRUST	2		0ACH-000001			
23	1027952	CARRIER	1		0ACH-000001			
24	3088063	GEAR; PLANETARY	3		0ACH-000001			
25	4190117	BRG;NEEDLE	3		0ACH-000001			
26	4430667	PLATE; THRUST	6		0ACH-000001			
27	4144558	PIN	3		0ACH-000001			
28	4144525	PIN SPRING	3		0ACH-000001			
30	3088062	GEAR; SUN	1		0ACH-000001			
32	3088126	PIPE	1		0ACH-000001			
35	4445354	PLUG	2		0ACH-000001			
36	94-2012	PLUG	1		0ACH-000001			
51	3080001	PACKING	1		0ACH-000001			
52	3080000	COVER	1		0ACH-000001			
53	M341228	BOLT; SOCKET	4		0ACH-000001			
53	4614096	BOLT; SOCKET	4		0ACH-000001			
100	9318090	MOTOR;OIL	1		0ACH-000001			
101	4614096	BOLT; SOCKET	12		0ACH-000001			
102	Z959499	RING RETAINING	1		0ACH-000001			
104	4264452	PIPE	1		0ACH-000001			
105	3074223	GAUGE; LEVEL	1		0ACH-000001			
106	4388529	PIPE	1		0ACH-000001			
107	4343365	CAP	1		0ACH-000001			
108	3053093	NAME-PLATE	1		0ACH-000001			
109	M492564	SCREW-DRIVE	1		0ACH-000001			
200	9186783	SWING DEVICE	1		0ACH-000001			
--	**9160139**	**PARTS; SWING**	**--**					
300-0	J922270	BOLT	12		0ACH-000001			
300-1	J222022	WASHER	12		0ACH-000001			
300-4	4390656	PIN;KNOCK	2		0ACH-000001			

MOTOR;OIL (SWING)

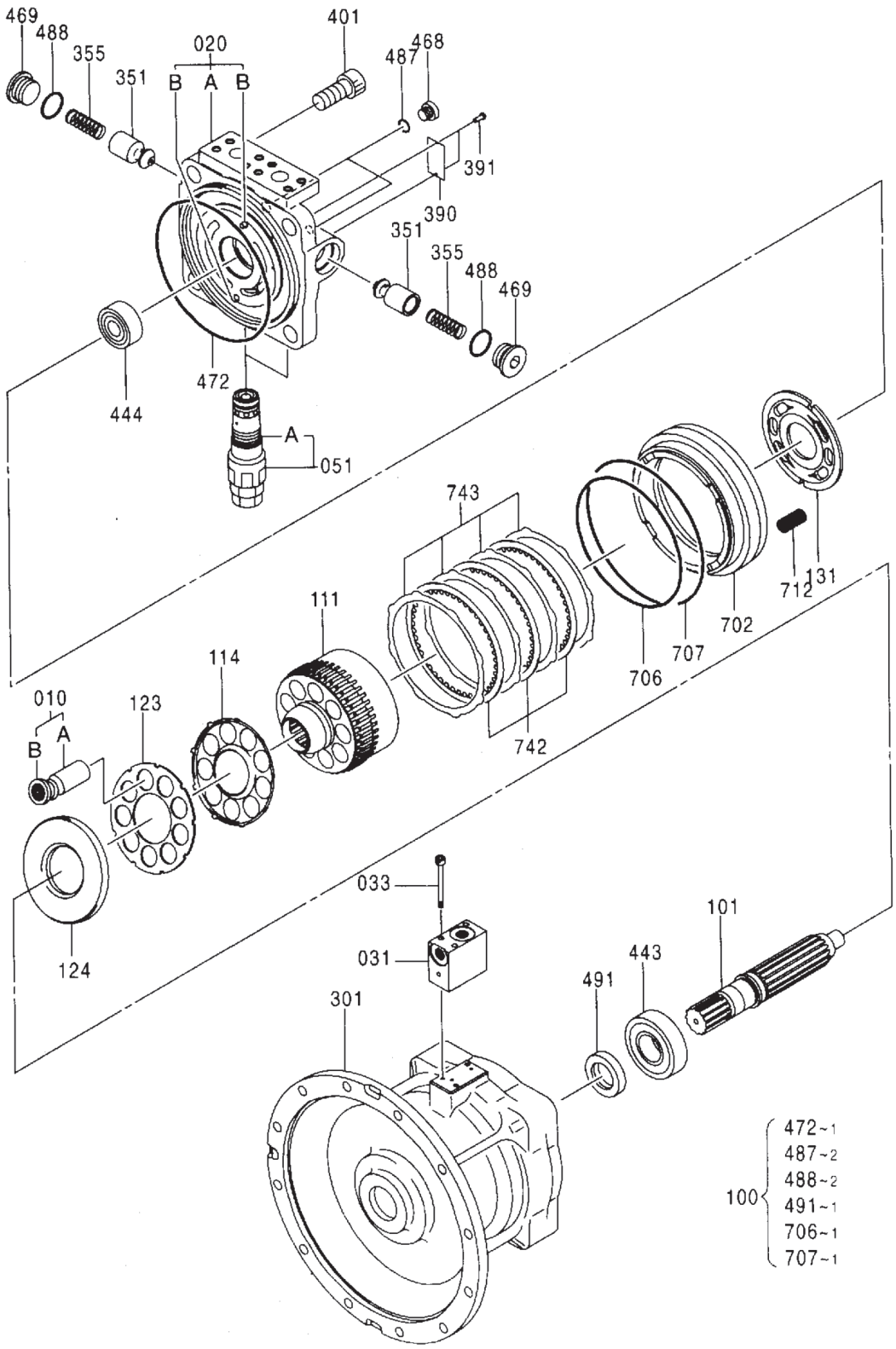

MOTOR;OIL (SWING)

ITEM	PART NO.	PART NAME	QTY	S.C.	MACHINE SERIAL NO. ONWARDS	ICA	REPLACEABLE PART	
							PART NO.	QTY
--	**4419718**	**MOTOR;OIL**	**1**					
010	0816201	* PISTON ASS'Y	9					
010A	+++++++	** PISTON	1					
010B	+++++++	** SHOE	1					
020	0816202	* CASING ASS'Y	1					
020A	+++++++	** CASING	1					
020B	+++++++	** PIN;SPRING	2					
031	0816203	* VALVE	1					
033	0384401	* BOLT;SOCKET	3					
051	0816204	* VALVE;RELIEF	2					
051A	A811030	** O-rING	2					
101	0816205	* SHAFT	1					
111	0816206	* CYLINDER	1					
114	0816207	* SPRING;PLATE	1					
123	0816208	* RETAINER	1					
124	0816209	* PLATE	1					
131	0816210	* PLATE;VALVE	1					
301	0816211	* CASING	1					
351	0803007	* PLUNGER	2					
355	0803008	* SPRING	2					
390	0625508	* NAME-PLATE	1					
391	0625509	* PIN	2					
401	0365318	* BOLT;SOCKET	4					
443	0816212	* BRG.;ROL.	1					
444	0816213	* BRG.;ROL.	1					
444	0872302	* BRG.;ROL.	1					
468	0629404	* PLUG	2					
469	0803009	* PLUG	2					
472	0401202	* O-RING	1					
487	957366	* O-RING	2					
488	984614	* O-RING	2					
491	0353318	* SEAL;OIL	1					
702	0816214	* PISTON	1					
706	0365330	* O-RING	1					
707	0308623	* O-RING	1					
712	0747307	* SPRING;BRAKE	20					
742	0816215	* PLATE;FRICTION	3					
743	0816216	* PLATE	4					
100	0816217	KIT;SEAL	1					

SUCTION PIPING

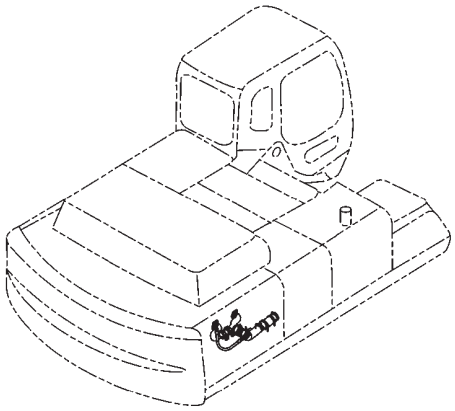

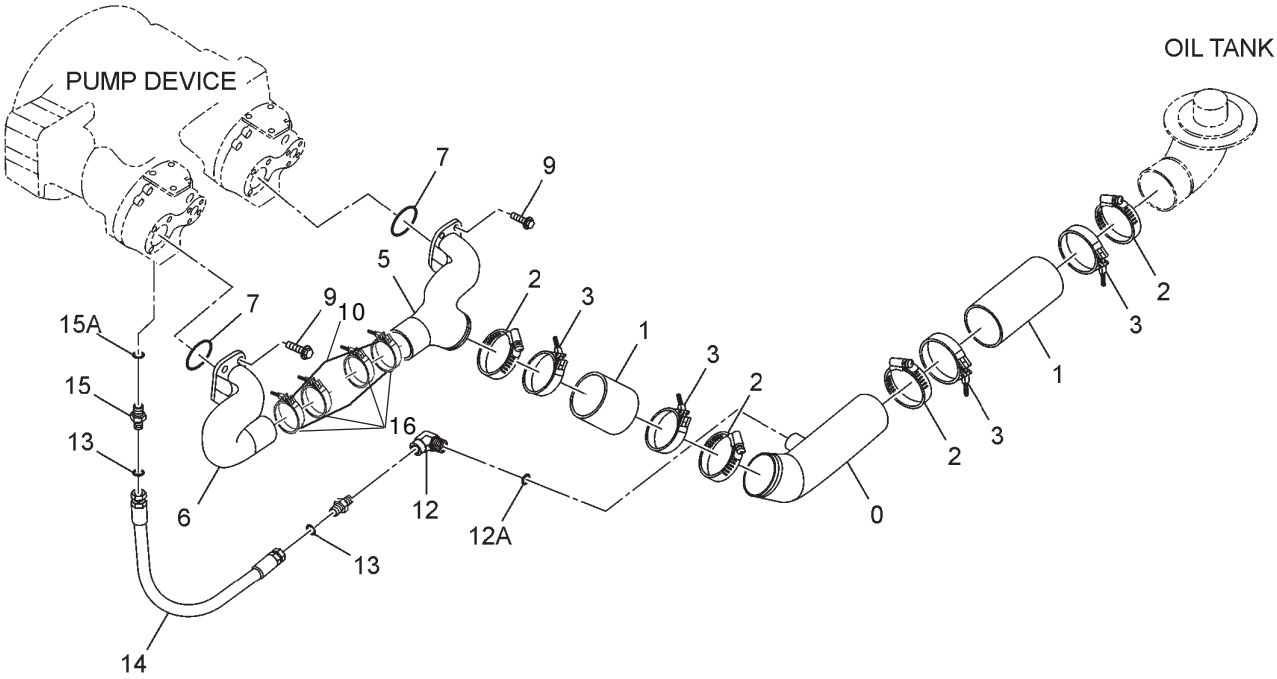

SUCTION PIPING

ITEM	PART NO.	PART NAME	QTY	S.C.	MACHINE SERIAL NO. ONWARDS	ICA	REPLACEABLE PART	
							PART NO.	QTY
--	**9191452**	**PIPING SUCTION**	**--**					
0	8069336	PIPE;SUCTION	1		0ACH-000001			
1	TE01825	HOSE;RUBBER	2		0ACH-000001			
2	4282488	CLAMP;HOSE	8		0ACH-000001			
5	TB00689	MANI FOLD	1		0ACH-000001			
6	TC00943	MANIFOLD	1		0ACH-000001			
7	A811075	O-RING	2		0ACH-000001			
9	J781225	BOLT;SOCKET	8		0ACH-000001			
10	4109378	HOSE RUBBER	1		0ACH-000001			
12	A853366	ELBOW;S	1		0ACH-000001			
12A	4506424	O-RING	1		0ACH-000001			
13	4187308	O-RING	2		0ACH-000001			
14	4197724	HOSE ASSY	1		0ACH-000001			
15	4189539	ADAPTER;S	1		0ACH-000001			
15A	4506424	O-RING	1		0ACH-000001			
16	4263766	CLAMP HOSE	4		0ACH-000001			

DELIVERY PIPING

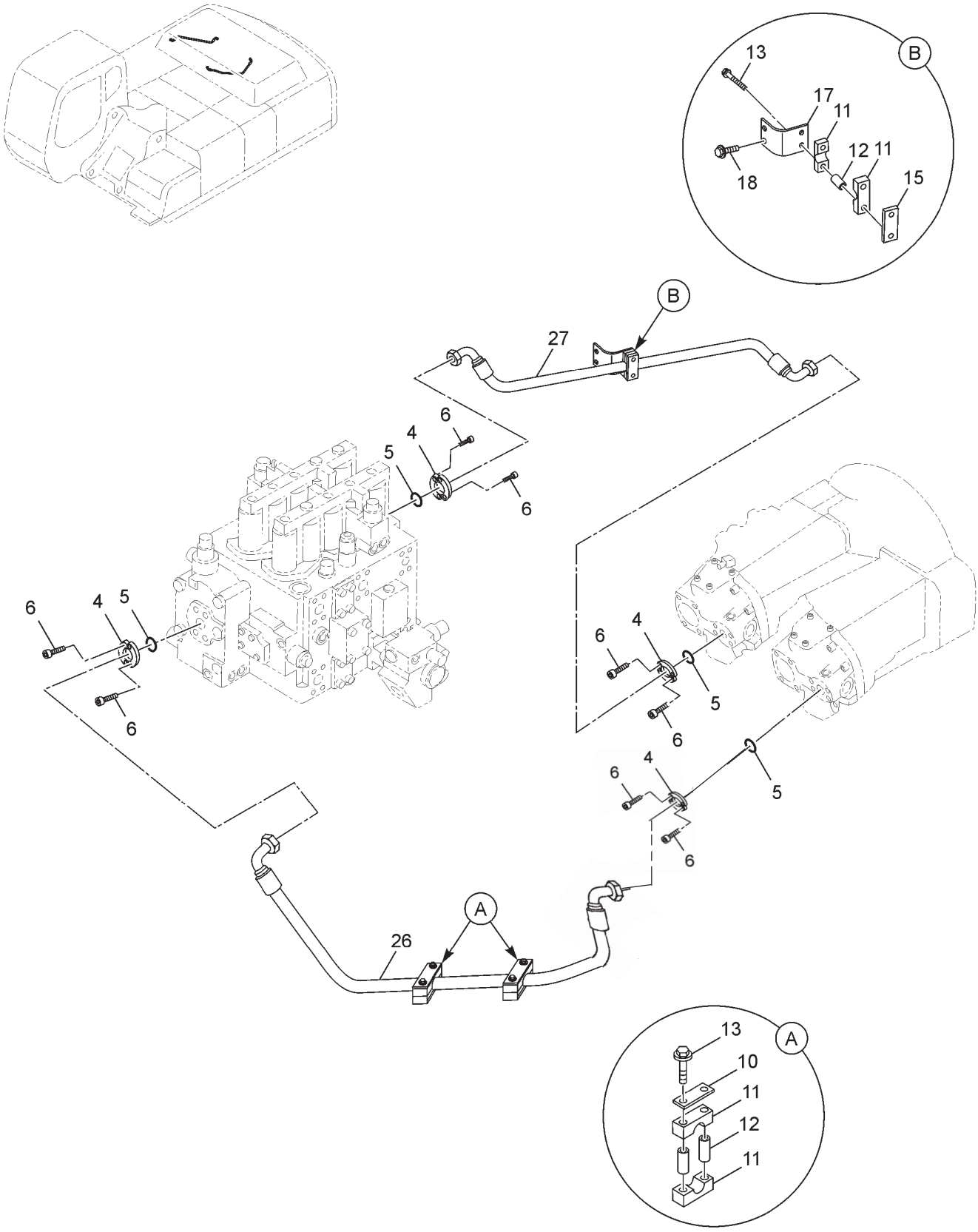

DELIVERY PIPING

ITEM	PART NO.	PART NAME	QTY	S.C.	SERIAL NO.	ICA	REPLACEABLE PART	
							PART NO.	QTY
--	**9191453**	**PIPING; DELIVERY**	**--**					
3	2035088	MANIFOLD	1		0ACH-000001			
4	4085560	FLANGE;SPLIT	8		0ACH-000001			
5	Z966993	O-RING	5		0ACH-000001			
6	J781240	BOLT;SOCKET	16		0ACH-000001			
10	4195494	PLATE	2		0ACH-000001			
11	4323361	CLAMP	6		0ACH-000001			
12	4323362	SPACER	6		0ACH-000001			
13	J271090	BOLT; SEMS	6	D	0ACH-000001			
15	4255264	SEAT;SCREW	1		0ACH-000001			
17	9747719	BRACKET	1		0ACH-000001			
18	J271025	BOLT; SEMS	2	D	0ACH-000001			
26	TE03800	HOSE	1		0ACH-000001			
27	4398036	HOSE	1		0ACH-000001			

DRAIN PIPING

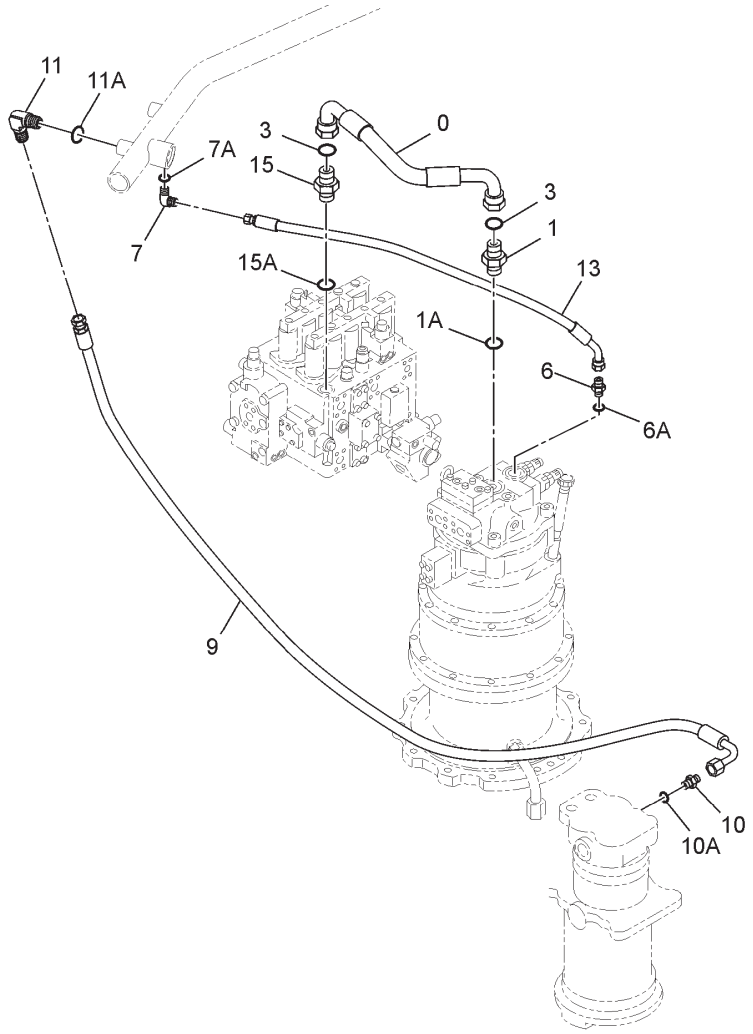

ITEM	PART NO.	PART NAME	QTY	S.C.	MACHINE SERIAL NO. ONWARDS	ICA	REPLACEABLE PART	
							PART NO.	QTY
--	**9191454**	**PIPING DRAIN**	**--**					
0	4390646	HOSE	1		0ACH-000001			
1	A853188	ADAPTER;S	1		0ACH-000001			
1A	4506429	O-RING	1		0ACH-000001			
3	4187328	O-RING	2		0ACH-000001			
6	A852143	ADAPTER;S	1		0ACH-000001			
6A	4506418	O-RING	1		0ACH-000001			
7	A852333	ELBOW;S	1		0ACH-000001			
7A	4509180	O-RING	1		0ACH-000001			
9	4313440	HOSE	1		0ACH-000001			
10	A852134	ADAPTER	1		0ACH-000001			
10A	4509180	O-RING	1		0ACH-000001			
11	A852334	ELBOW;S	1		0ACH-000001			
11A	4509180	O-RING	1		0ACH-000001			
13	4355412	HOSE;PLASTIC	1		0ACH-000231			
15	4189601	ADAPTER;S	1		0ACH-000001			
15A	4506424	O-RING	1		0ACH-000001			

MAIN PIPING (1)

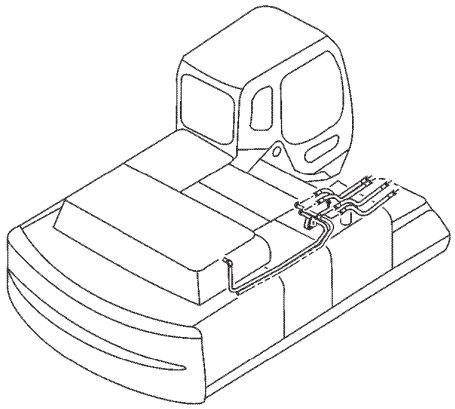

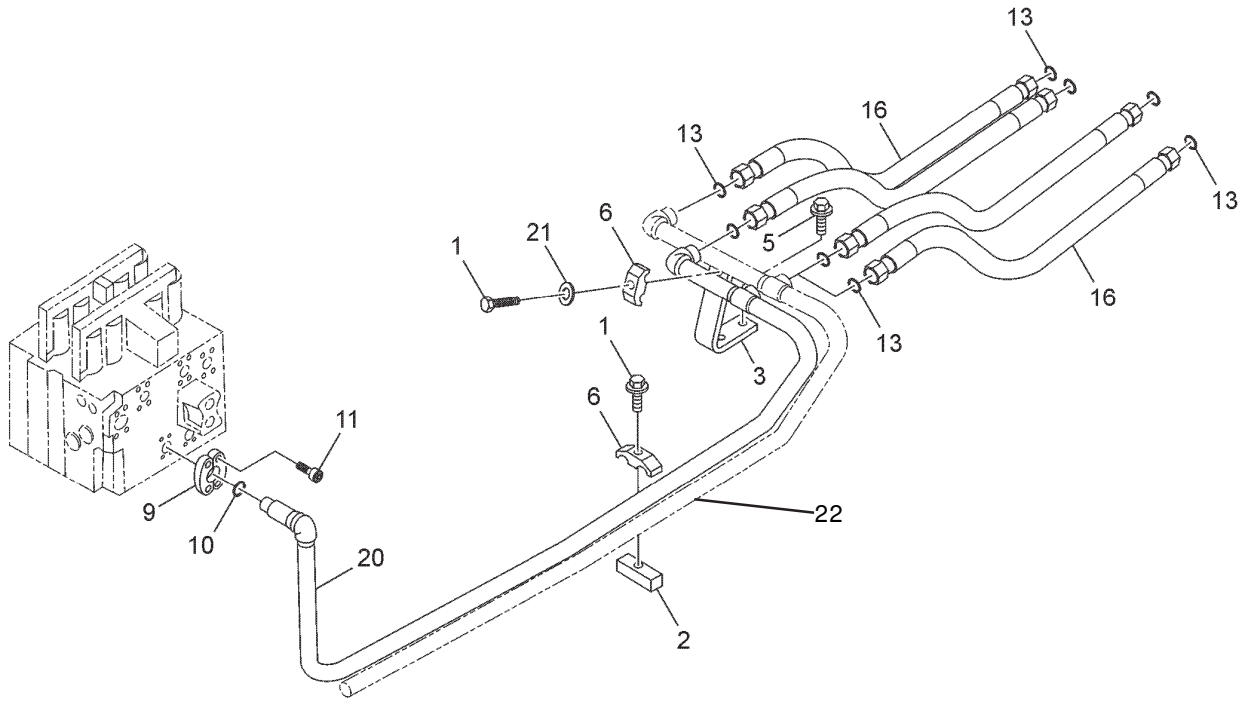

ITEM	PART NO.	PART NAME	QTY	S.C.	MACHINE SERIAL NO. ONWARDS	ICA	REPLACEABLE PART	
							PART NO.	QTY
--	**9160144**	**MAIN PIPING (1)**	--					
1	J901270	BOLT	2		0ACH-000001			
2	4209157	SEAT;SCREW	1		0ACH-000001			
3	4206060	SUPPORT	1		0ACH-000001			
5	J011230	BOLT; SEMS	2		0ACH-000001			
6	4189860	CLAMP;PIPE	2		0ACH-000001			
9	Z986910	FLANGE;SPLIT	2		0ACH-000001			
10	Z971489	O-RING	1		0ACH-000001			
11	J781030	BOLT;SOCKET	4		0ACH-000001			
13	4187328	O-RING	8		0ACH-000001			
16	4345675	HOSE	4		0ACH-000001			
20	8069137	PIPE	1		0ACH-000001			
21	A590912	WASHER;SPRING	2		0ACH-000001			
22	8069136	PIPE	1		0ACH-000001			

MAIN PIPING (2)

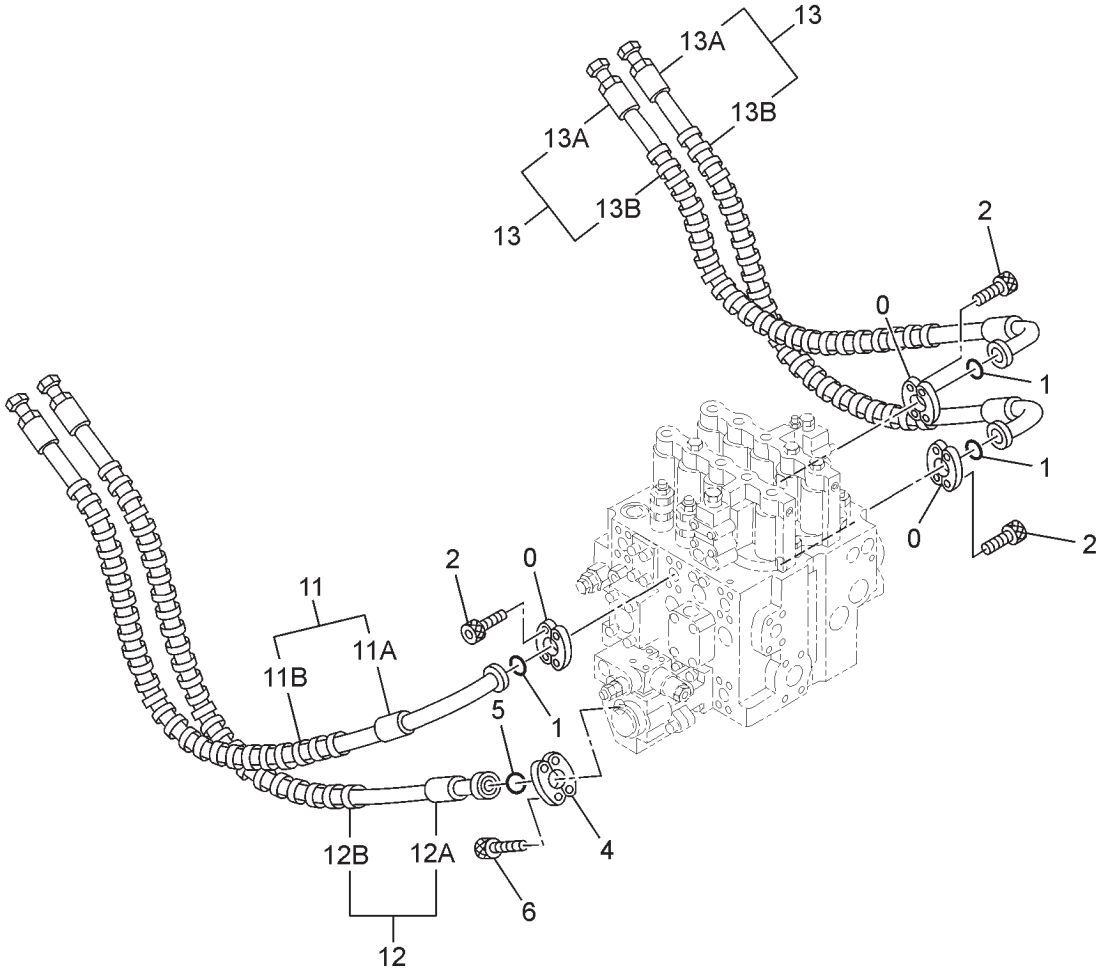

ITEM	PART NO.	PART NAME	QTY	S.C.	MACHINE SERIAL NO. ONWARDS	ICA	REPLACEABLE PART	
							PART NO.	QTY
--	**9191455**	**MAIN PIPING (2)**	**--**					
0	Z962453	FLANGE SPLIT	6		0ACH-000001			
1	Z966993	O-RING	3		0ACH-000001			
2	J781030	BOLT;SOCKET	12		0ACH-000001			
4	4154614	FLANGE;SPLIT	2		0ACH-000001			
5	4508805	O-RING;	1		0ACH-000001			
6	J781230	BOLT;SOCKET	4		0ACH-000001			
11	9194287	HOSE ASS'Y	1		0ACH-000001			
11A	4402781	HOSE	1		0ACH-000001			
11B	4327294	PROTECTOR	3		0ACH-000001			
12	9196720	HOSE ASSY	1		0ACH-000001			
12A	4439932	HOSE	1		0ACH-000001			
12B	4327294	PROTECTOR	2		0ACH-000001			
13	9194288	HOSE ASSY	2		0ACH-000001			
13A	4439931	HOSE	1		0ACH-000001			
13B	4327294	PROTECTOR	2		0ACH-000001			

MAIN PIPING (3)

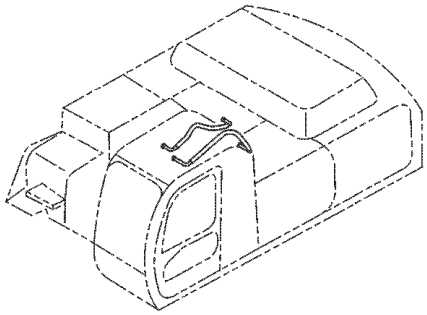

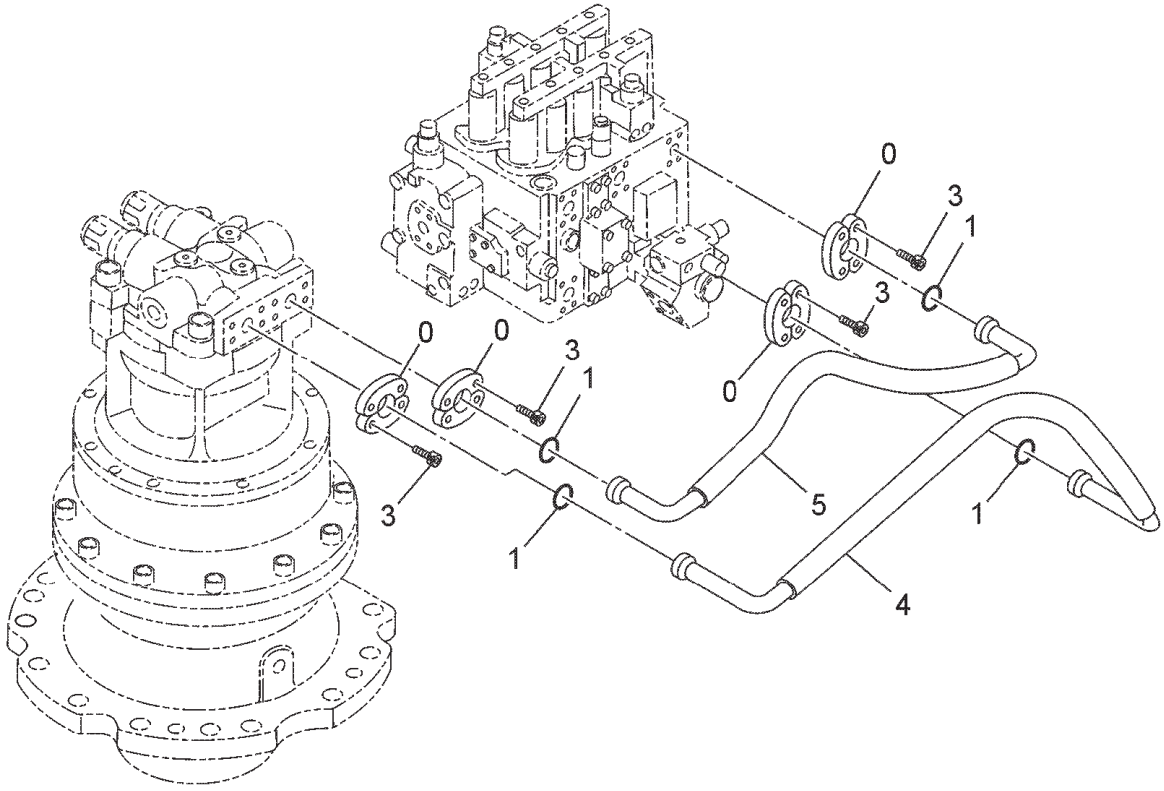

ITEM	PART NO.	PART NAME	QTY	S.C.	MACHINE SERIAL NO. ONWARDS	ICA	REPLACEABLE PART	
							PART NO.	QTY
--	**9191456**	**MAIN PIPING (3)**	**--**					
0	Z986910	FLANGE;SPLIT	8		0ACH-000001			
1	Z971489	O-RING	4		0ACH-000001			
3	J781030	BOLT;SOCKET	16		0ACH-000001			
4	4386285	HOSE	1		0ACH-000001			
5	4408679	HOSE	1		0ACH-000001			

MAIN PIPING (4)

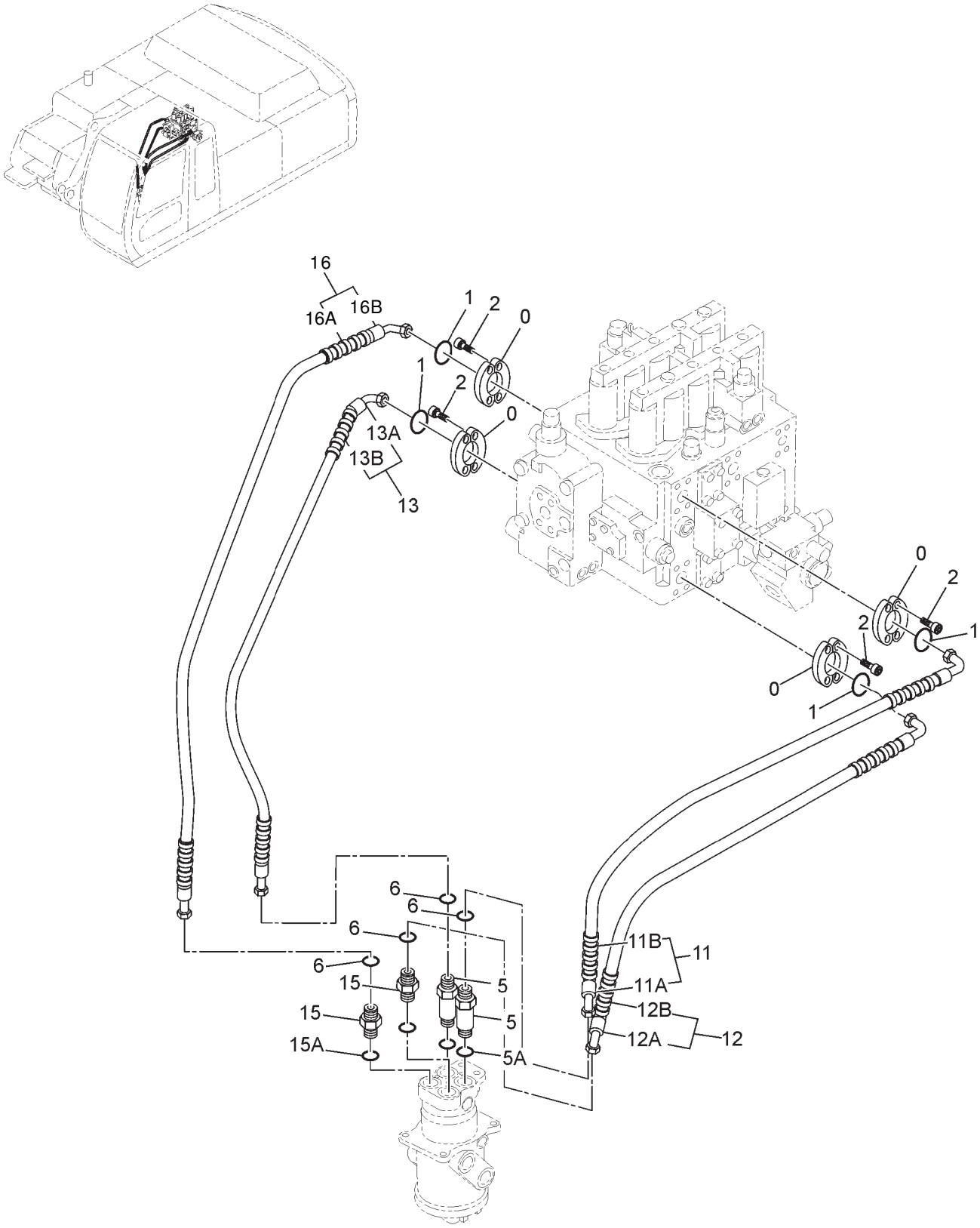

MAIN PIPING (4)

ITEM	PART NO.	PART NAME	QTY	S.C.	MACHINE SERIAL NO. ONWARDS	ICA	REPLACEABLE PART	
							PART NO.	QTY
--	**9205832**	**MAIN PIPING (4)**	**--**					
0	Z962453	FLANGE SPLIT	8		0ACH-000001			
1	Z966993	O-RING;	4		0ACH-000001			
2	J781030	BOLT;SOCKET	16		0ACH-000001			
5	4198411	ADAPTER;S	2		0ACH-000001			
5A	4506424	O-RING	1		0ACH-000001			
6	4187328	O-RING	4		0ACH-000001			
11	TE05241	HOSE ASSY;	2		0ACH-000001			
11A	4386286	HOSE	1		0ACH-000001			
11B	4327294	PROTECTOR	2		0ACH-000001			
12	9163648	HOSE ASSY;	1		0ACH-000001			
12A	4386287	HOSE	1		0ACH-000001			
12B	4327294	PROTECTOR	2		0ACH-000001			
13	9163649	HOSE ASSY;	1		0ACH-000001			
13A	4386288	HOSE	1		0ACH-000001			
13B	4327294	PROTECTOR	1		0ACH-000001			
15	4189601	ADAPTER;S	2		0ACH-000001			
15A	4506424	O-RING	1		0ACH-000001			
16	TE05236	HOSE ASSY.	1		0ACH-000001			

RETURN PIPING (1)

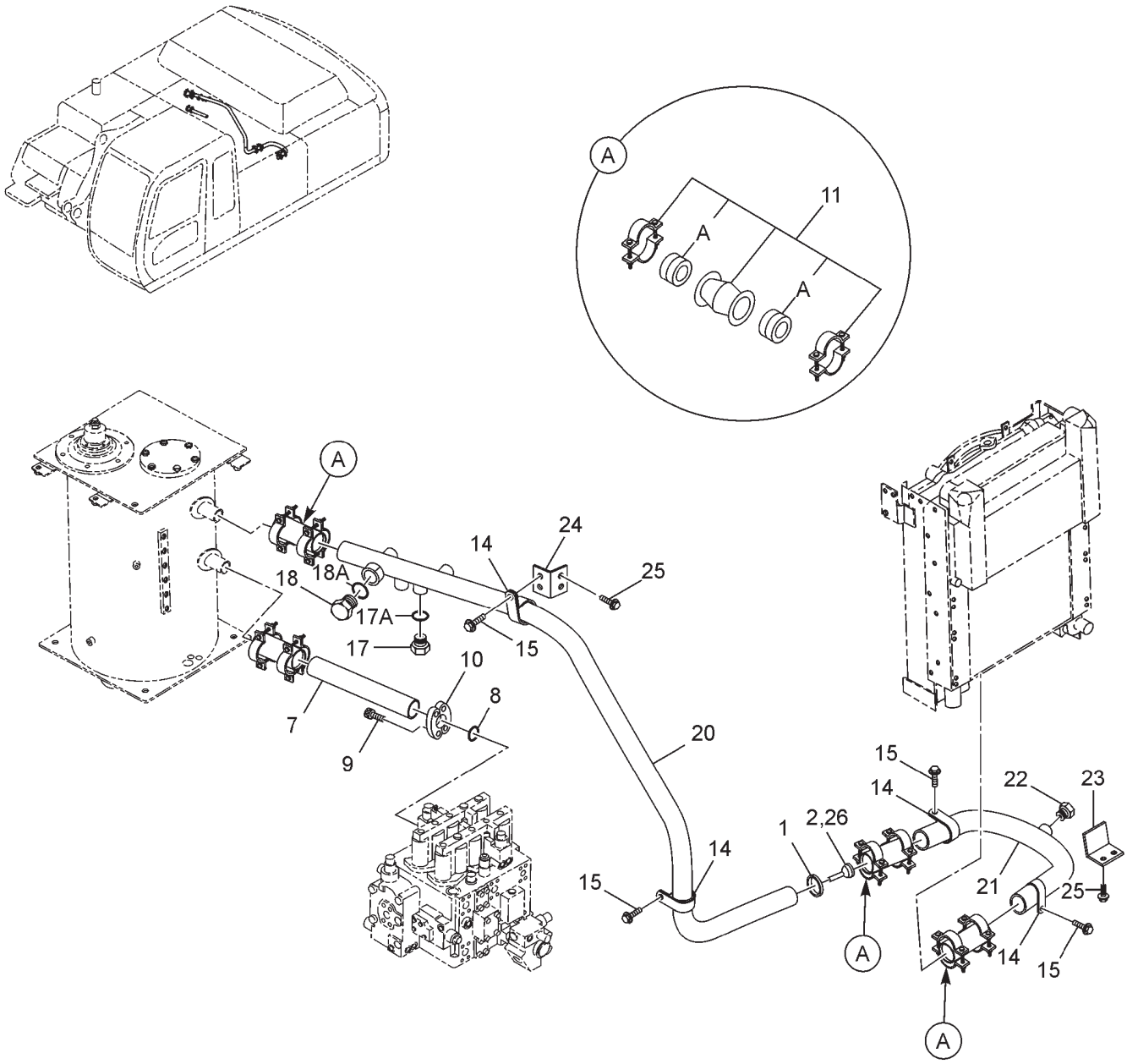

RETURN PIPING (1)

ITEM	PART NO.	PART NAME	QTY	S.C.	SERIAL NO.	ICA	REPLACEABLE PART	
							PART NO.	QTY
--	**9191457**	**RETURN PIPING (1)**	**--**					
1	Z991718	RING;RETAINING	1		0ACH-000001			
7	8081805	PIPE;RETURN	1		0ACH-000001			
8	4508805	O-RING	1		0ACH-000001			
9	J781230	BOLT;SOCKET	4		0ACH-000001			
10	4154614	FLANGE;SPLIT	2		0ACH-000001			
11	4712342	COUPLING	4		0ACH-000001			
11A	4196260	SEAL;RING	2		0ACH-000001			
14	4053697	CLAMP PIPE	4		0ACH-000001			
15	J011270	BOLT;SEMS	4		0ACH-000001			
17	A885003	PLUG	1		0ACH-000001			
17A	4509180	O-RING	1		0ACH-000001			
18	A885008	PLUG	1		0ACH-000001			
18A	4506429	O-RING	1		0ACH-000001			
20	7039891	PIPE;RETURN	1		0ACH-000001			
21	9756199	PIPE;RETURN	1		0ACH-000001			
22	A885002	PLUG	1		0ACH-000001			
22A	Z957366	O-RING	1		0ACH-000001			
23	9759265	BRACKET	1		0ACH-000001			
24	9759266	BRACKET	1		0ACH-000001			
25	J281035	BOLT; SEMS	4		0ACH-000001			
26	4678480	VALVE	1		0ACH-000005			

RETURN PIPING (2)

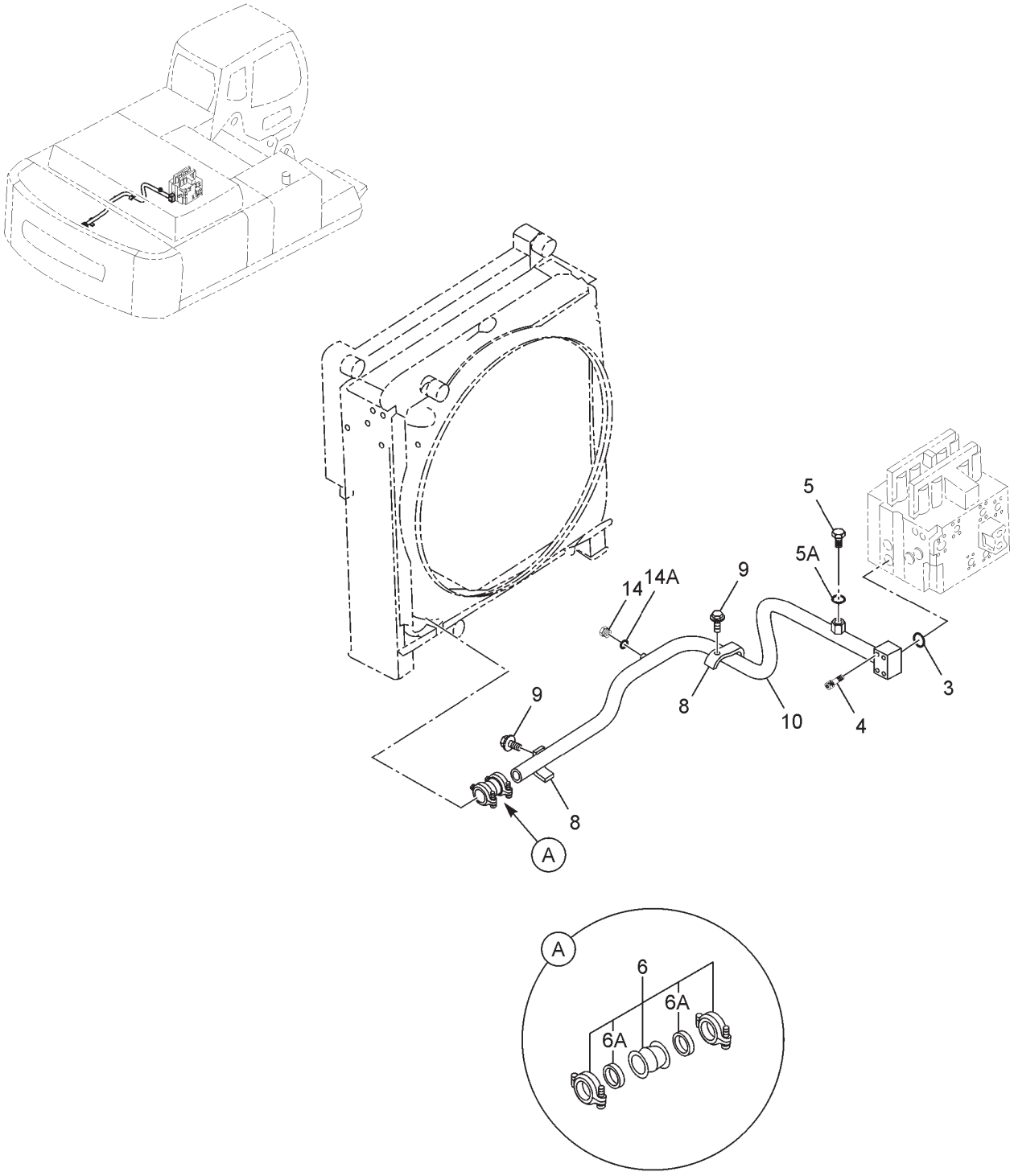

RETURN PIPING (2)

ITEM	PART NO.	PART NAME	QTY	S.C.	MACHINE SERIAL NO. ONWARDS	ICA	REPLACEABLE PART	
							PART NO.	QTY
--	**9191458**	**RETURN PIPING (2)**	**--**					
3	A811050	O-RING	1		0ACH-000001			
4	J781280	BOLT;SOCKET	4		0ACH-000001			
5	A885008	PLUG	1		0ACH-000001			
5A	4506429	O-RING	1		0ACH-000001			
6	4712342	COUPLING	1		0ACH-000001			
6A	4196260	SEAL;RING	2		0ACH-000001			
8	4053697	CLAMP PIPE	2		0ACH-000001			
9	J011270	BOLT;SEMS	2		0ACH-000001			
10	7039892	PIPE;RETURN	1		0ACH-000001			
14	A885002	PLUG	1		0ACH-000001			
14A	Z957366	O-RING	1		0ACH-000001			

PILOT PIPING (1)

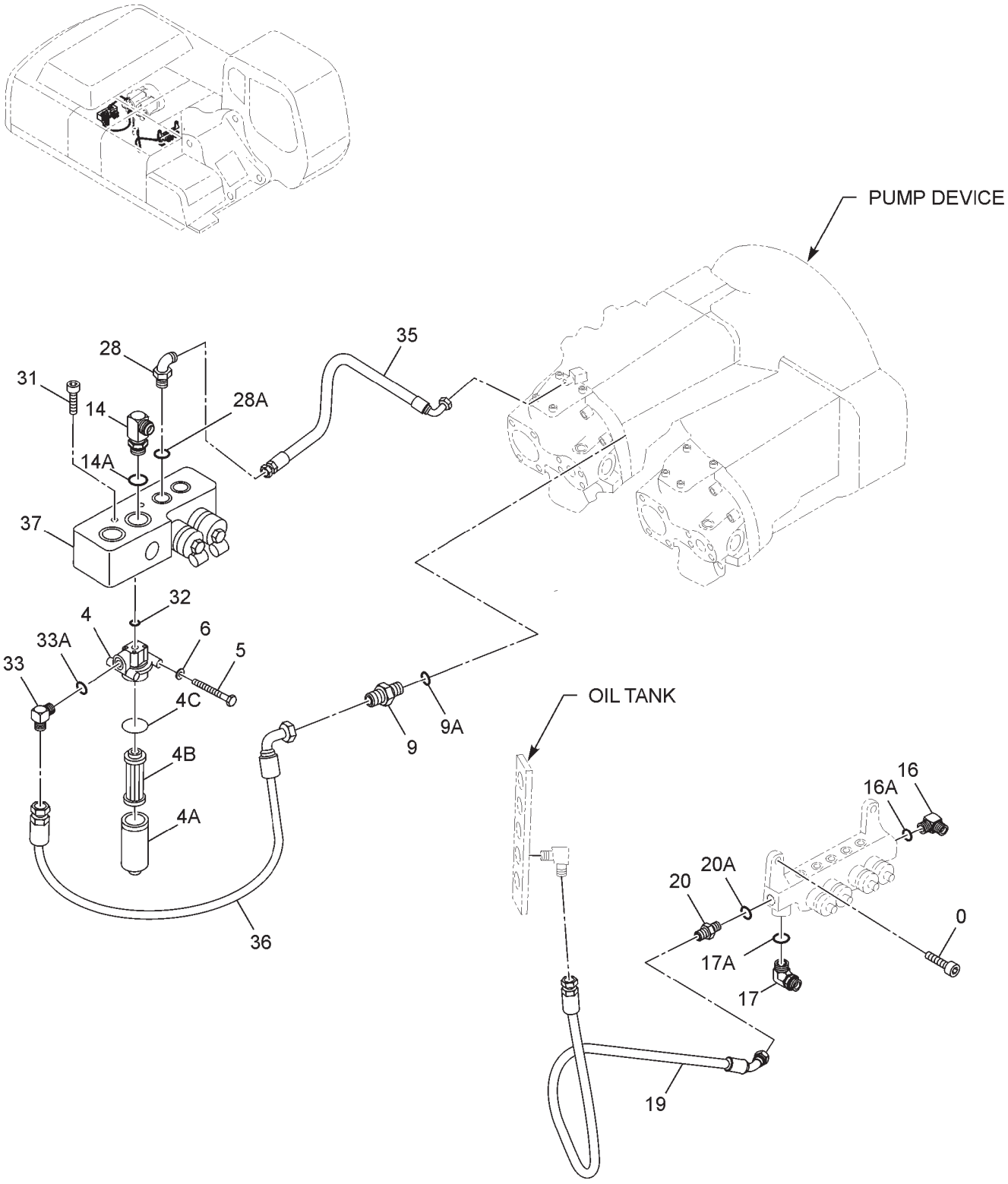

PILOT PIPING (1)

ITEM	PART NO.	PART NAME	QTY	S.C.	MACHINE SERIAL NO. ONWARDS	ICA	REPLACEABLE PART	
							PART NO.	QTY
--	**9191459**	**PILOT PIPING (1)**	**--**					
0	J781035	BOLT;SOCKET	2		0ACH-000001			
4	4330227	FILTER;OIL	1		0ACH-000001			
4A	4370435	ELEMENT;FILTER	1		0ACH-000001			
4B	4191301	ELEMENT;FILTER	1		0ACH-000001			
4C	A811060	O-RING	1		0ACH-000001			
5	J901004	BOLT	2		0ACH-000001			
6	A590910	SPR.WASHER	2		0ACH-000001			
9	A852134	ADAPTER	1		0ACH-000001			
9A	A811060	O-RING	1		0ACH-000001			
14	A852343	ELBOW;S	1		0ACH-000001			
14A	4506418	O-RING	1		0ACH-000001			
16	A852233	ELBOW;S	1		0ACH-000001			
16A	4506418	O-RING	1		0ACH-000001			
17	A852234	ELBOW;S	1		0ACH-000001			
17A	4506418	O-RING	1		0ACH-000001			
19	4405562	HOSE	1		0ACH-000001			
20	A852134	ADAPTER	1		0ACH-000001			
20A	4506418	O-RING	1		0ACH-000001			
28	A852222	ELBOW;S	1		0ACH-000001			
28A	4506418	O-RING	1		0ACH-000001			
31	J780880	BOLT	4		0ACH-000001			
32	4506416	RING BACKUP	1		0ACH-000001			
33	A852344	ELBOW;S	1		0ACH-000001			
33A	4506418	O-RING	1		0ACH-000001			
35	4436293	HOSE	1		0ACH-000001			
36	4413313	HOSE	1		0ACH-000001			
37	9220906	VALVE;SOLENOID	1		0ACH-000001			

PILOT PIPING (2)

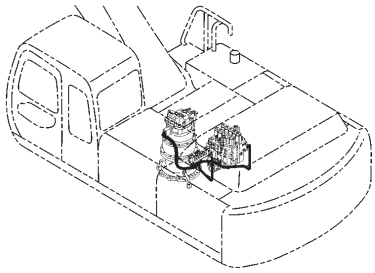

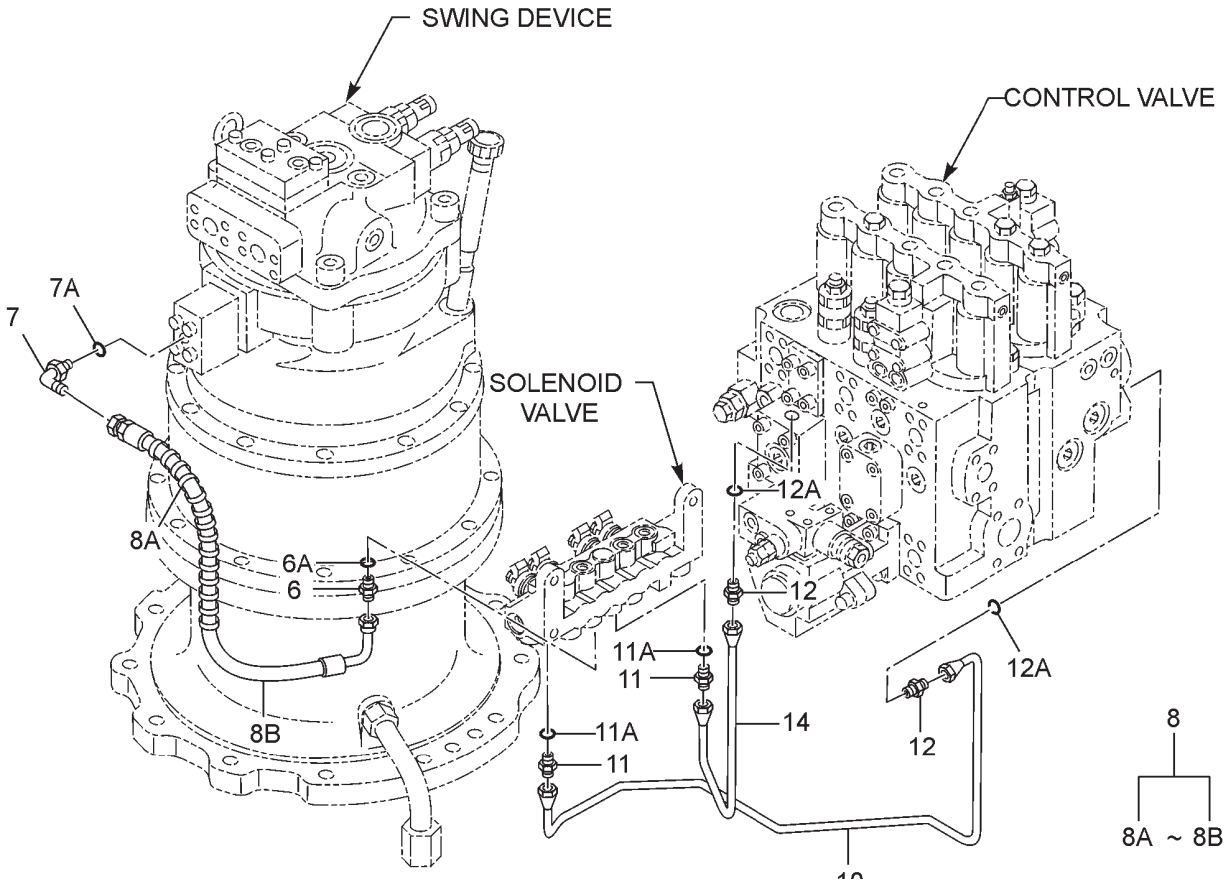

ITEM	PART NO.	PART NAME	QTY	S.C.	MACHINE SERIAL NO. ONWARDS	ICA	REPLACEABLE PART	
							PART NO.	QTY
--	**9191460**	**PILOT PIPING (2)**	**--**					
6	A852123	ADAPTER;S	1		0ACH-000001			
6A	Z957366	O-RING	1		0ACH-000001			
7	A852323	ELBOW;S	1		0ACH-000001			
7A	Z957366	O-RING	1		0ACH-000001			
8	9190851	HOSE ASSY	1		0ACH-000001			
8A	4327293	PROTECTOR	1		0ACH-000001			
8B	4465681	HOSE	1		0ACH-000001			
10	3079454	PIPE	1		0ACH-000001			
11	4255304	FITTING;PIPE	2		0ACH-000001			
11A	Z957366	O-RING	1		0ACH-000001			
12	4404022	FITTING	2		0ACH-000001			
12A	Z957366	O-RING	1		0ACH-000001			
14	4386483	PIPE	1		0ACH-000001			

PILOT PIPING (3)

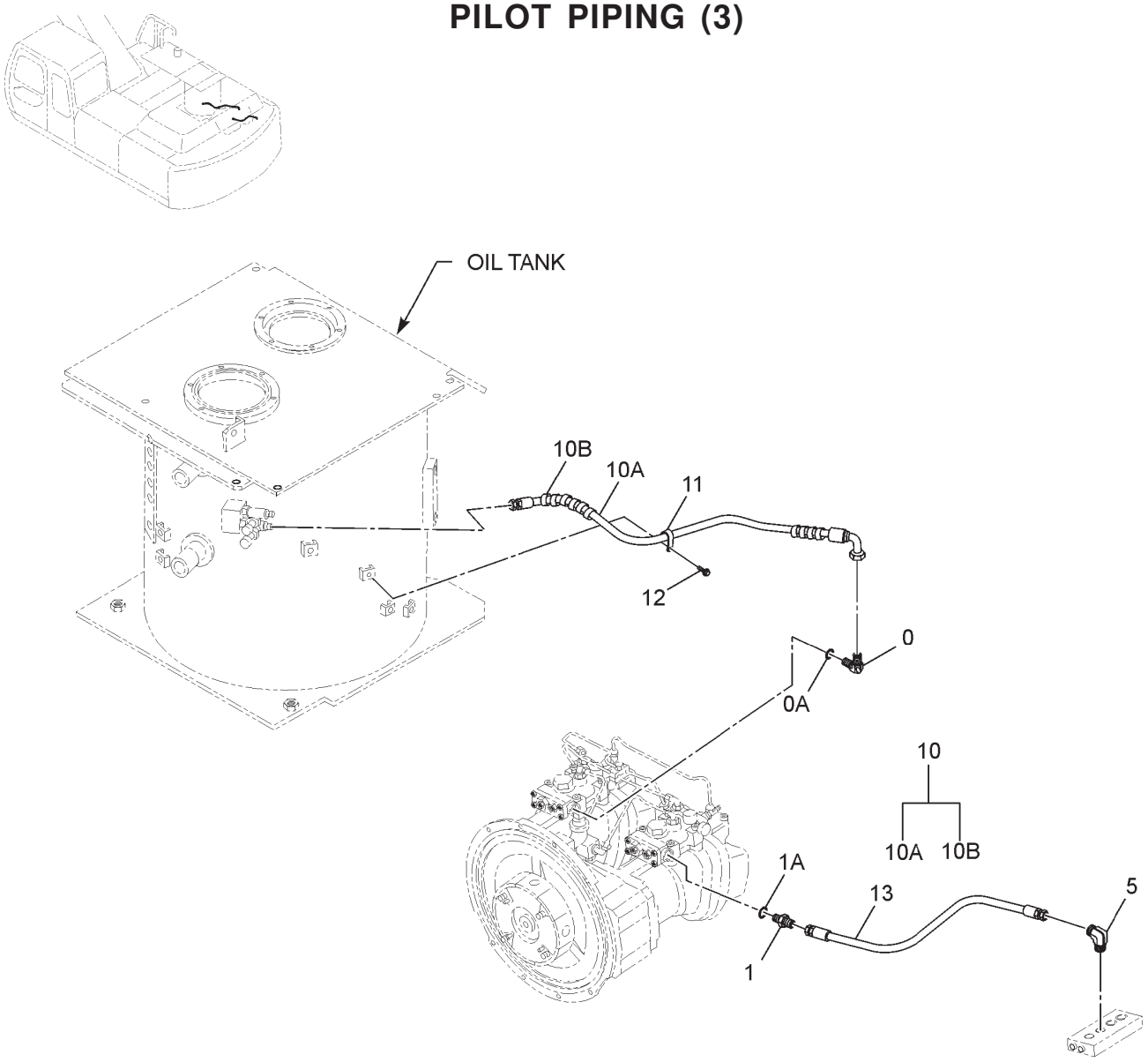

ITEM	PART NO.	PART NAME	QTY	S.C.	MACHINE SERIAL NO. ONWARDS	ICA	REPLACEABLE PART	
							PART NO.	QTY
--	**9191461**	**PILOT PIPING (3)**	**--**					
0	A852322	ELBOW;S	1		0ACH-000001			
0A	Z957366	O-RING	1		0ACH-000001			
1	A852122	ADAPTER;S	1		0ACH-000001			
1A	Z957366	O-RING	1		0ACH-000001			
5	A852222	ELBOW;S	1		0ACH-000001			
5A	Z957366	O-RING	1		0ACH-000001			
10	9200071	HOSE ASSY	1		0ACH-000001			
10A	4442442	HOSE	1		0ACH-000001			
10B	4327315	PROTECTOR	1		0ACH-000001			
11	4190275	CLIP	1		0ACH-000001			
12	J011020	BOLT;SEMS	1		0ACH-000001			

PILOT PIPING (4)

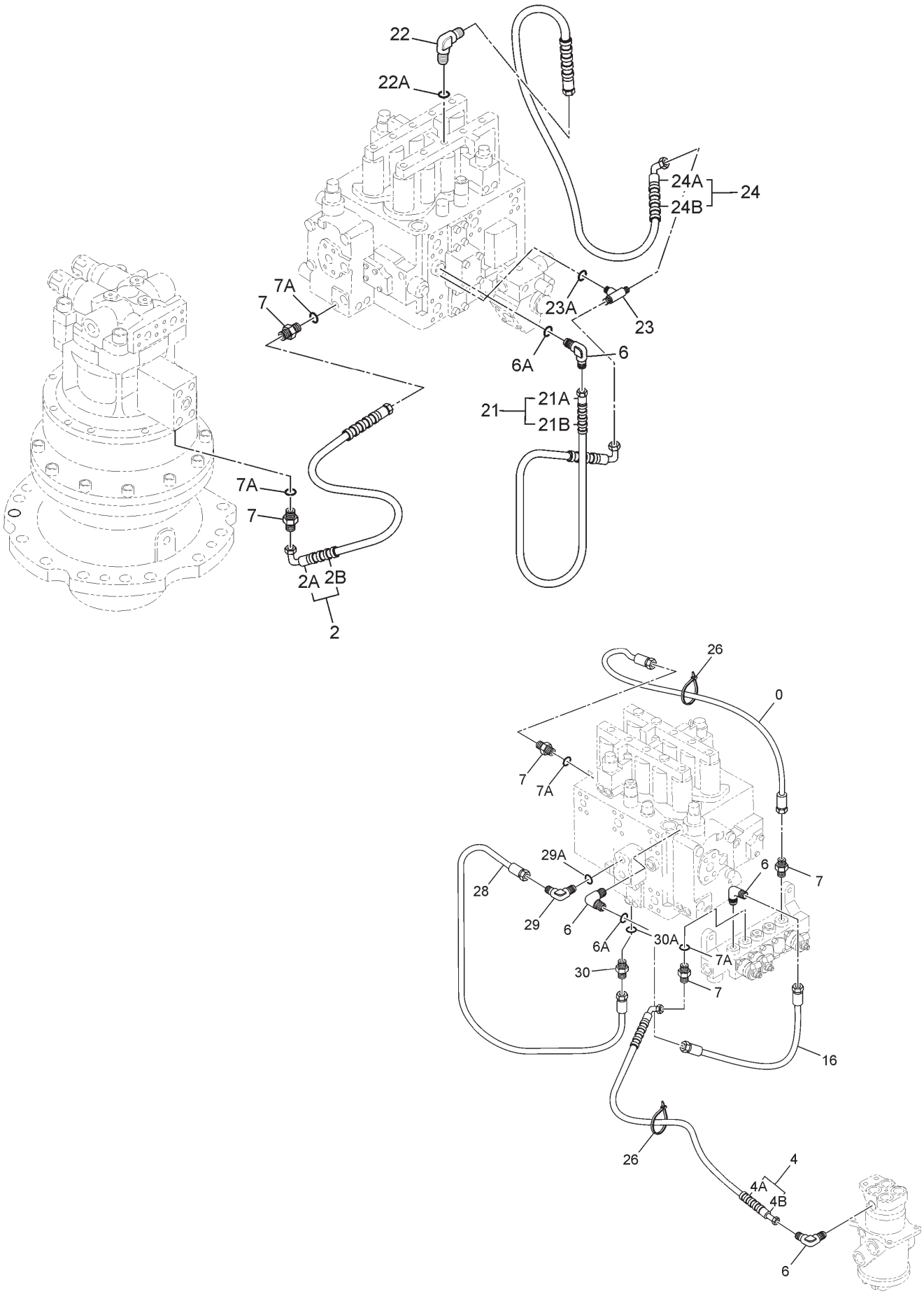

PILOT PIPING (4)

ITEM	PART NO.	PART NAME	QTY	S.C.	MACHINE SERIAL NO. ONWARDS	ICA	REPLACEABLE PART	
							PART NO.	QTY
--	**9191462**	**PILOT PIPING (4)**	**--**					
2	9190854	HOSE ASS'Y	1		0ACH-000001			
2A	4327293	PROTECTOR	1		0ACH-000001			
2B	4465683	HOSE	1		0ACH-000001			
4	9190859	HOSE ASSY.	1		0ACH-000001			
6	A852322	ELBOW;S	1		0ACH-000001			
6A	Z957366	O-RING	1		0ACH-000001			
7	A852122	ADAPTER;S	2		0ACH-000001			
7A	Z957366	O-RING	1		0ACH-000001			
21	9190861	HOSE ASS'Y	1		0ACH-000001			
21A	4437902	HOSE	1		0ACH-000001			
21B	4327293	PROTECTOR	2		0ACH-000001			
22	4351281	ELBOW;S	1		0ACH-000001			
22A	Z957366	O-RING	1		0ACH-000001			
23	A852522	TEE;S	1		0ACH-000001			
23A	Z957366	O-RING	1		0ACH-000001			
24	9190865	HOSE ASS'Y	1		0ACH-000001			
24A	4437734	HOSE	1		0ACH-000001			
24B	4327293	PROTECTOR	1		0ACH-000001			
26	4055312	CLIP BAND	2		0ACH-000001			
28	3079448	PIPE	1		0ACH-000001			
29	4293950	ELBOW; S	1		0ACH-000001			
29A	Z957366	O-RING	1		0ACH-000001			
30	4255304	FITTING; PIPE	1		0ACH-000001			
30A	Z957366	O-RING	1		0ACH-000001			

PILOT PIPING (5-1)

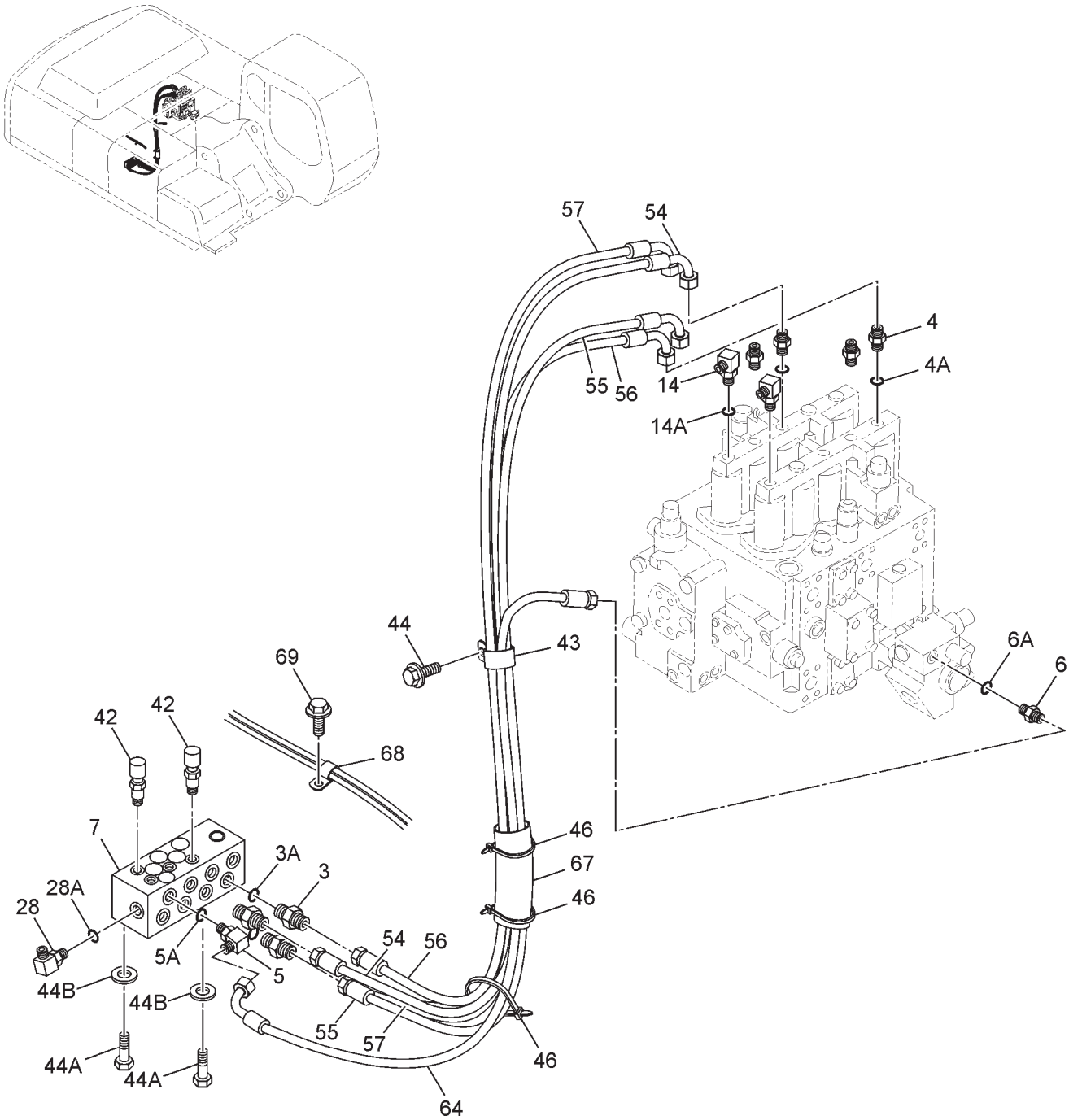

PILOT PIPING (5-1)

ITEM	PART NO.	PART NAME	QTY	S.C.	MACHINE SERIAL NO. ONWARDS	ICA	REPLACEABLE PART	
							PART NO.	QTY
--	**9191463**	**PILOT PIPING (5-1)**	**--**					
3	A852133	ADAPTER;S	3		0ACH-000001			
3A	4509180	O-RING	1		0ACH-000001			
4	4202422	ADAPTER	4		0ACH-000001			
4A	4509180	O-RING	1		0ACH-000001			
5	A852433	TEE;S	1		0ACH-000001			
5A	4509180	O-RING	1		0ACH-000001			
6	A852123	ADAPTER;S	1		0ACH-000001			
6A	4509180	O-RING	1		0ACH-000001			
7	9214480	VALVE;FC	1		0ACH-000001			
14	4208913	ELBOW;S	2		0ACH-000001			
14A	4509180	O-RING	1		0ACH-000001			
28	A852323	ELBOW;S	1		0ACH-000001			
29	A852122	ADAPTER'S	2		0ACH-000001			
28A	4509180	O-RING	1		0ACH-000001			
42	4436535	SENSOR; PRESSURE	2		0ACH-000001			
43	4193848	CLIP	1		0ACH-000001			
44	J271020	BOLT; SEMS	1		0ACH-000001			
44A	J901020	BOLT	1		0ACH-000001			
44B	A590110	WASHER;PLANE	1		0ACH-000001			
46	4055312	CLIP;BAND	4		0ACH-000001			
54	4456548	HOSE;PLASTIC	1		0ACH-000001			
55	4456550	HOSE;PLASTIC	1		0ACH-000001			
56	4456551	HOSE;PLASTIC	1		0ACH-000001			
57	4456552	HOSE;PLASTIC	1		0ACH-000001			
64	4456554	HOSE	1		0ACH-000001			
67	4219918	BUSHING;RUBBER	1		0ACH-000001			
68	4190265	CLIP	1		0ACH-000001			
69	J011020	BOLT; SEMS	1		0ACH-000001			
70	9243848	HOSE ASS'Y	1		0ACH-000001			
70A	4437795	HOSE	1		0ACH-000001			
70B	4327293	PROTECTOR	1		0ACH-000001			

PILOT PIPING (5-2)

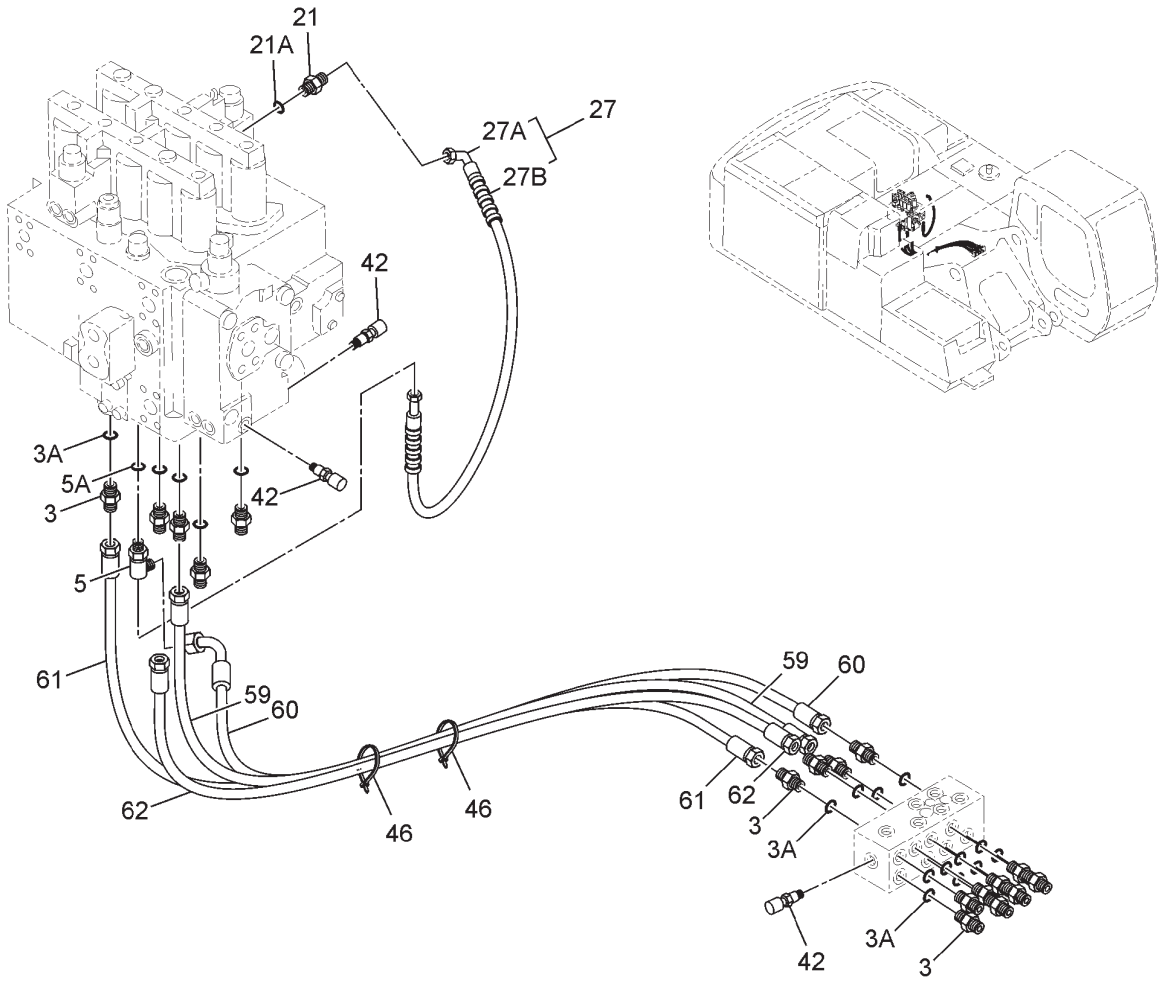

ITEM	PART NO.	PART NAME	QTY	S.C.	MACHINE SERIAL NO. ONWARDS	ICA	REPLACEABLE PART	
							PART NO.	QTY
--	**9191463**	**PILOT PIPING (5-2)**	--					
3	A852133	ADAPTER;S	17		0ACH-000001			
3A	4509180	O-RING	1		0ACH-000001			
5	A852433	TEE;S	1		0ACH-000001			
5A	4509180	O-RING	1		0ACH-000001			
21	4209931	ADAPTER;S	1		0ACH-000001			
21A	4509180	O-RING	1		0ACH-000001			
27	9190867	HOSE ASSY	1		0ACH-000001			
27A	4437738	HOSE	1		0ACH-000001			
27B	4327293	PROTECTOR	1		0ACH-000001			
42	4436535	SENSOR;PRESSURE	4		0ACH-000001			
46	4055312	CLIP;BAND	2		0ACH-000001			
59	4456549	HOSE;PLASTIC	1		0ACH-000001			
60	4446129	HOSE;PLASTIC	1		0ACH-000001			
61	4437731	HOSE;PLASTIC	1		0ACH-000001			
62	4456553	HOSE;PLASTIC	1		0ACH-000001			

PILOT PIPING (5-3)

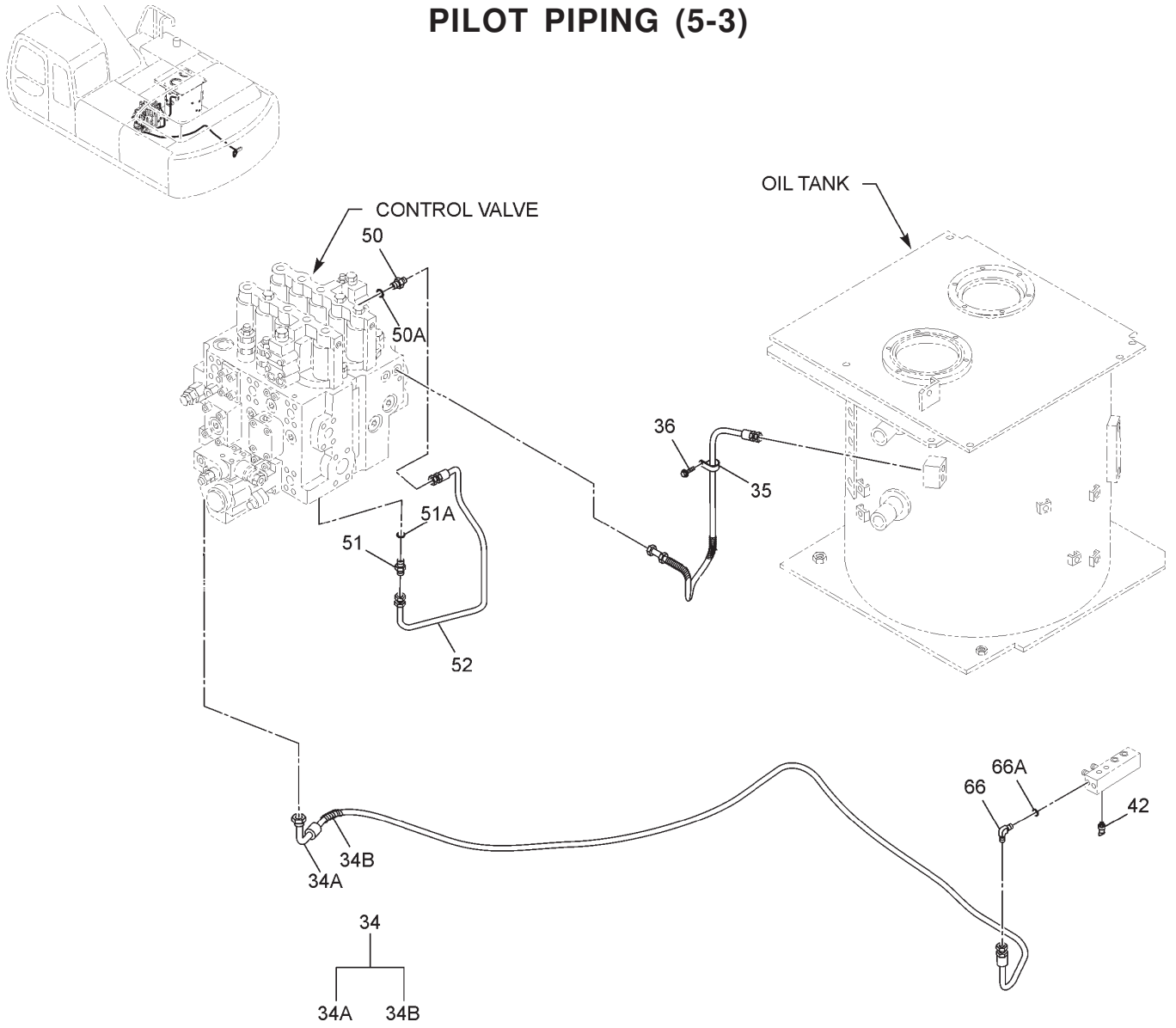

ITEM	PART NO.	PART NAME	QTY	S.C.	MACHINE SERIAL NO. ONWARDS	ICA	REPLACEABLE PART	
							PART NO.	QTY
--	**9191463**	**PILOT PIPING (5-3)**	--					
34	9200078	HOSE ASSY	1		0ACH-000001			
34A	4452736	HOSE	1		0ACH-000001			
34B	4327293	PROTECTOR	1		0ACH-000001			
35	4190292	CLIP	1		0ACH-000001			
36	J011020	BOLT;SEMS	1		0ACH-000001			
42	4436535	SENSOR;PRES	1		0ACH-000001			
50	4255304	FITTING;PIPE	1		0ACH-000001			
50A	Z957366	O-RING	1		0ACH-000001			
51	4255305	FITTING;PIPE	1		0ACH-000001			
51A	4509180	O-RING	1		0ACH-000001			
52	3079449	PIPE	1		0ACH-000001			
66	A852322	ELBOW	1		0ACH-000001			
66A	Z957366	O-RING	1		0ACH-000001			

PILOT PIPING (6)

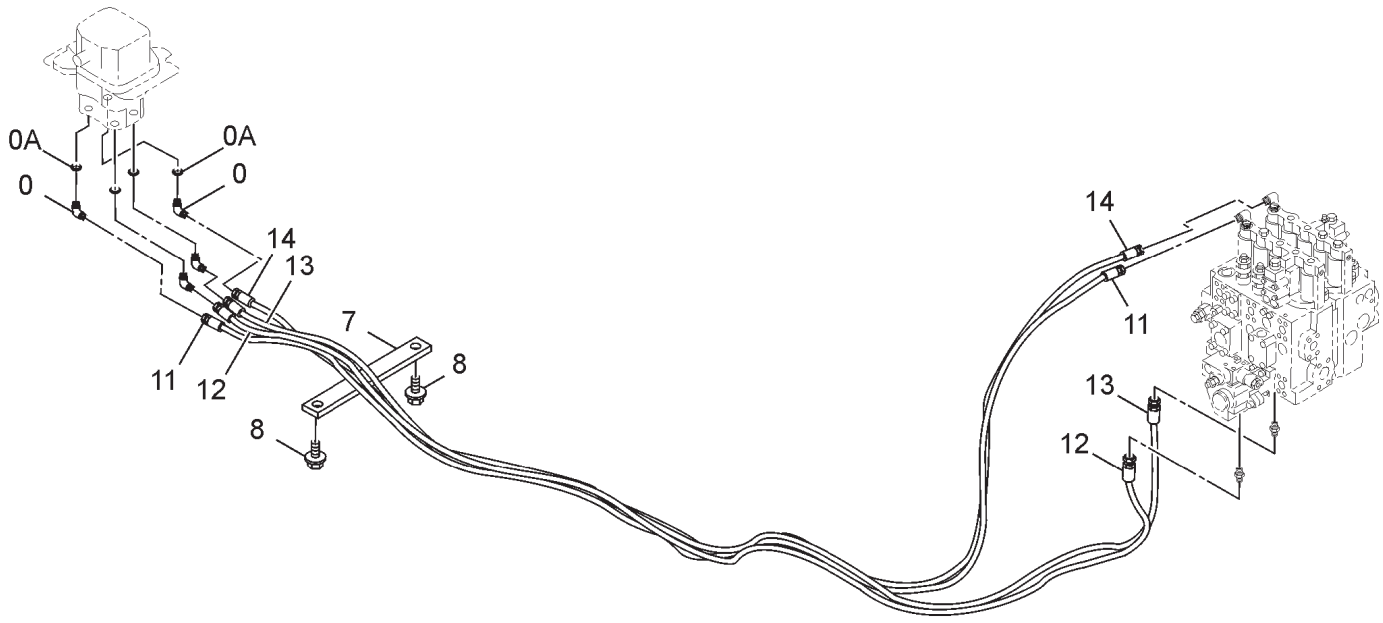

ITEM	PART NO.	PART NAME	QTY	S.C.	MACHINE SERIAL NO. ONWARDS	ICA	REPLACEABLE PART	
							PART NO.	QTY
--	**9204663**	**PILOT PIPING (6)**	**--**					
0	A852323	ELBOW;S	4		0ACH-000001			
0A	Z957366	O-RING	1		0ACH-000001			
7	4341877	CLAMP;HOSE	1		0ACH-000001			
8	J021020	BOLT;SEMS;	2		0ACH-000001			
11	4627274	HOSE;PLASTIC	1		0ACH-000001			
12	4627275	HOSE;PLASTIC	1		0ACH-000001			
13	4627277	HOSE;PLASTIC	1		0ACH-000001			
14	4627276	HOSE;PLASTIC	1		0ACH-000001			

PILOT PIPING (7)

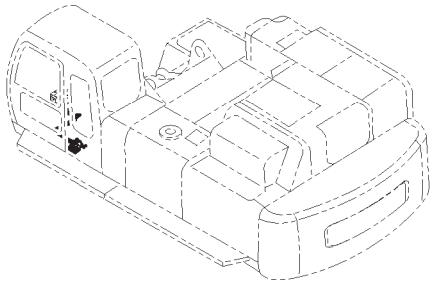

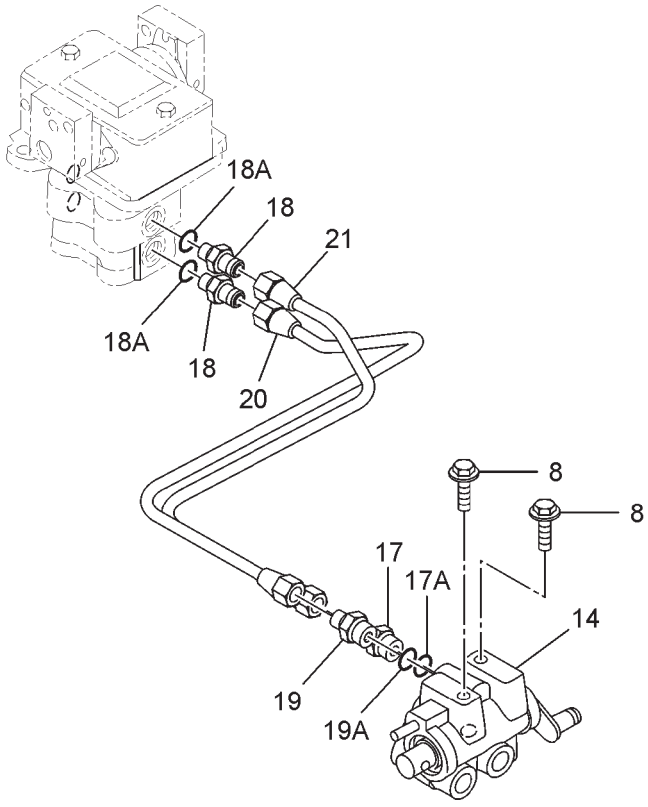

ITEM	PART NO.	PART NAME	QTY	S.C.	MACHINE SERIAL NO. ONWARDS	ICA	REPLACEABLE PART	
							PART NO.	QTY
--	**9176700**	**PILOT PIPING (7)**	**--**					
8	J271025	BOLT; SEMS	2		0ACH-000001			
14	4407253	VALVE;LOCK	1		0ACH-000001			
17	4255305	FITTING;PIPE	1		0ACH-000001			
17A	4509180	O-RING	1		0ACH-000001			
18	4255304	FITTING;PIPE	2		0ACH-000001			
18A	Z957366	O-RING	1		0ACH-000001			
19	4452326	FILTER	1		0ACH-000001			
19A	4509180	O-RING	1		0ACH-000001			
20	4607398	PIPE	1		0ACH-000001			
21	4607399	PIPE	1		0ACH-000001			

PILOT PIPING (8)

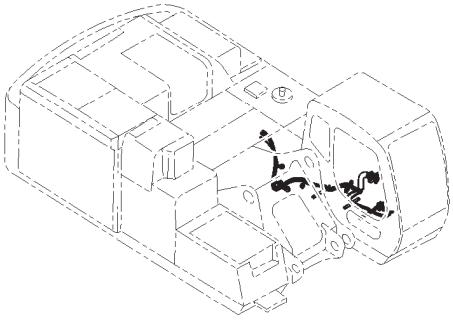

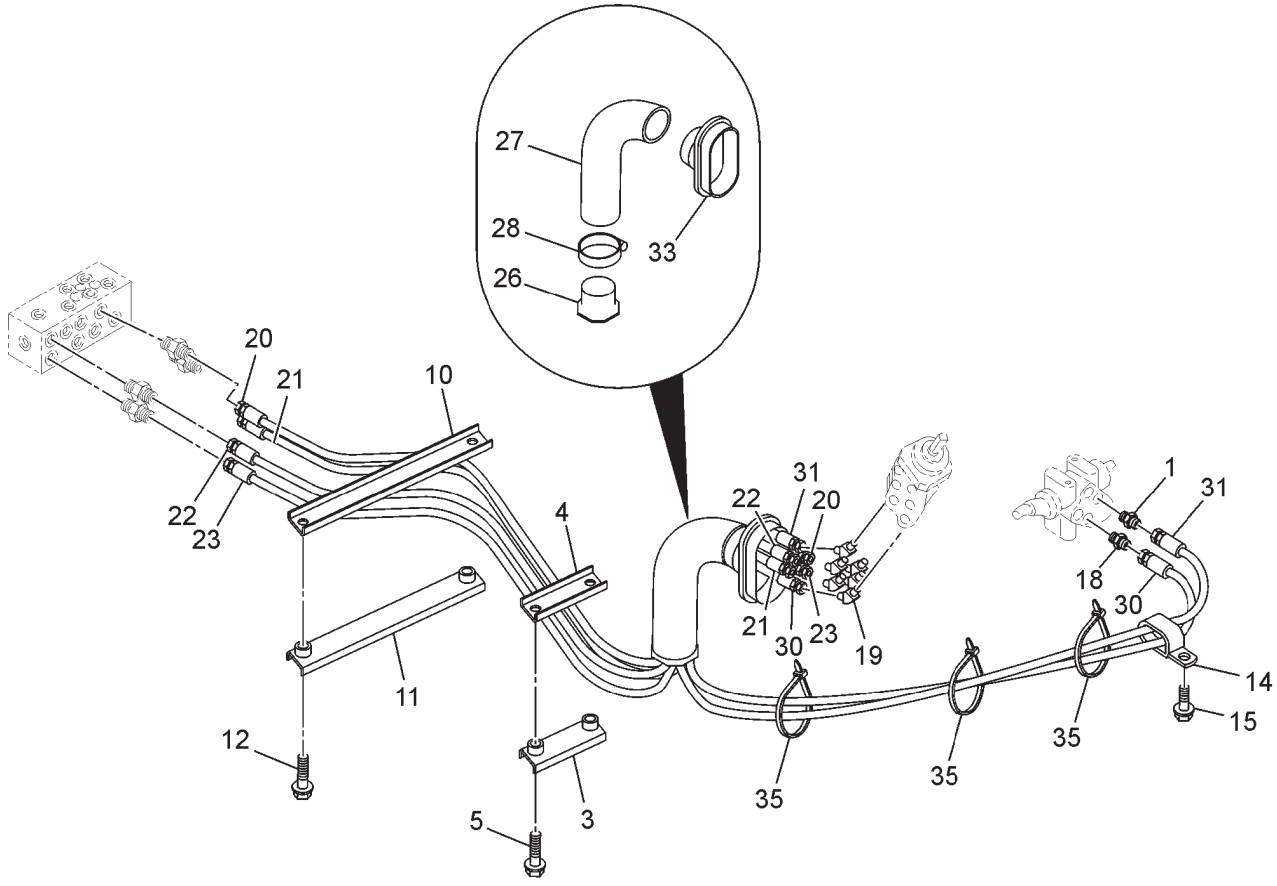

PILOT PIPING (8)

ITEM	PART NO.	PART NAME	QTY	S.C.	MACHINE SERIAL NO. ONWARDS	ICA	REPLACEABLE PART	
							PART NO.	QTY
--	**9204557**	**PILOT PIPING (8)**	**--**					
1	4261938	FILTER	1		0ACH-000001			
1A	4509180	O-RING	1		0ACH-000001			
3	4412666	CLAMP;HOSE	1		0ACH-000001			
4	9751787	CLAMP;HOSE	1		0ACH-000001			
5	J021040	BOLT; SEMS	2		0ACH-000001			
10	4425177	CLAMP; HOSE	1		0ACH-000001			
11	9757141	CLAMP;HOSE	1		0ACH-000001			
12	J021040	BOLT; SEMS	2		0ACH-000001			
14	4190264	CLIP	1		0ACH-000001			
15	J011020	BOLT; SEMS	1		0ACH-000001			
18	A852133	ADAPTER;S	1		0ACH-000001			
18A	4509180	O-RING	1		0ACH-000001			
19	4286916	ELBOW;S	6		0ACH-000001			
19A	Z957366	O-RING	1		0ACH-000001			
20	4456557	HOSE	1		0ACH-000001			
21	4456558	HOSE	1		0ACH-000001			
22	4456559	HOSE	1		0ACH-000001			
23	4456560	HOSE	1		0ACH-000001			
26	3079728	BUSHING	1		0ACH-000001			
27	4351175	HOSE	1		0ACH-000001			
28	4351774	CLAMP;WIRE	1		0ACH-000001			
30	4437653	HOSE;PLASTIC	1		0ACH-000001			
31	4437656	HOSE;PLASTIC	1		0ACH-000001			
33	2045998	BUSHING; RUBBER	1		0ACH-000001			
35	4055312	CLIP;BAND	3		0ACH-000001			

PILOT PIPING (9)

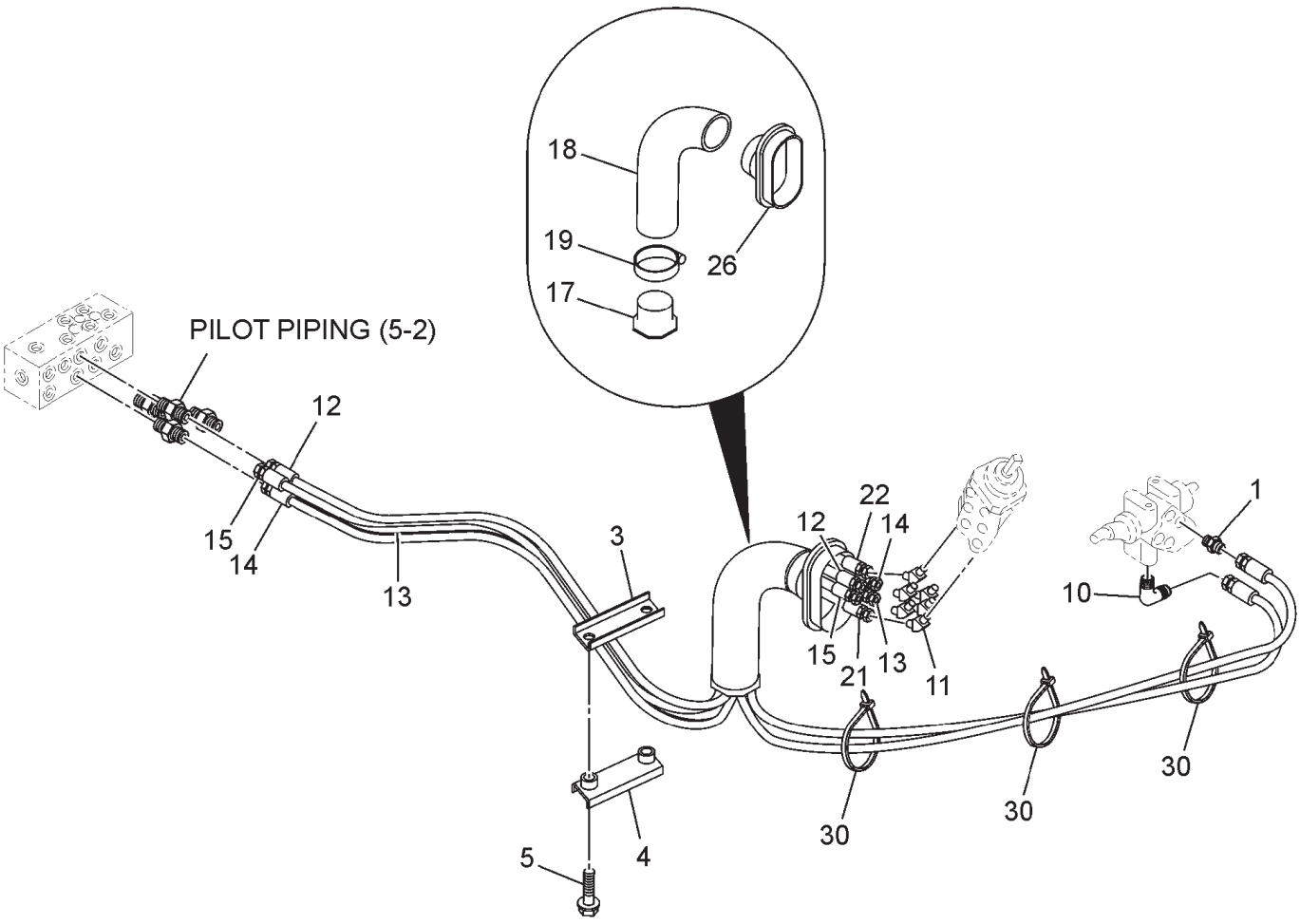

PILOT PIPING (9)

ITEM	PART NO.	PART NAME	QTY	S.C.	MACHINE SERIAL NO. ONWARDS	ICA	REPLACEABLE PART	
							PART NO.	QTY
--	**9204769**	**PILOT PIPING (2)**	**--**					
1	4261938	FILTER	1		0ACH-000001			
1A	4509180	O-RING	1		0ACH-000001			
3	4412666	CLAMP;HOSE	1		0ACH-000001			
4	9751787	CLAMP;HOSE	1		0ACH-000001			
5	J021040	BOLT; SEMS	2		0ACH-000001			
10	A852333	ELBOW;S	1		0ACH-000001			
10A	4509180	O-RING	1		0ACH-000001			
11	4286916	ELBOW;S	6		0ACH-000001			
11A	Z957366	O-RING	1		0ACH-000001			
12	4456555	HOSE	1		0ACH-000001			
13	4456556	HOSE	1		0ACH-000001			
14	4456546	HOSE	1		0ACH-000001			
15	4456547	HOSE	1		0ACH-000001			
17	3079728	BUSHING	1		0ACH-000001			
18	4351175	HOSE	1		0ACH-000001			
19	4351774	CLAMP;WIRE	1		0ACH-000001			
21	4438288	HOSE;PLASTIC	1		0ACH-000001			
22	4438290	HOSE;PLASTIC	1		0ACH-000001			
26	2045998	BUSHING; RUBBER	1		0ACH-000001			
30	4055312	CLIP;BAND	3		0ACH-000001			

PILOT PIPING (10)

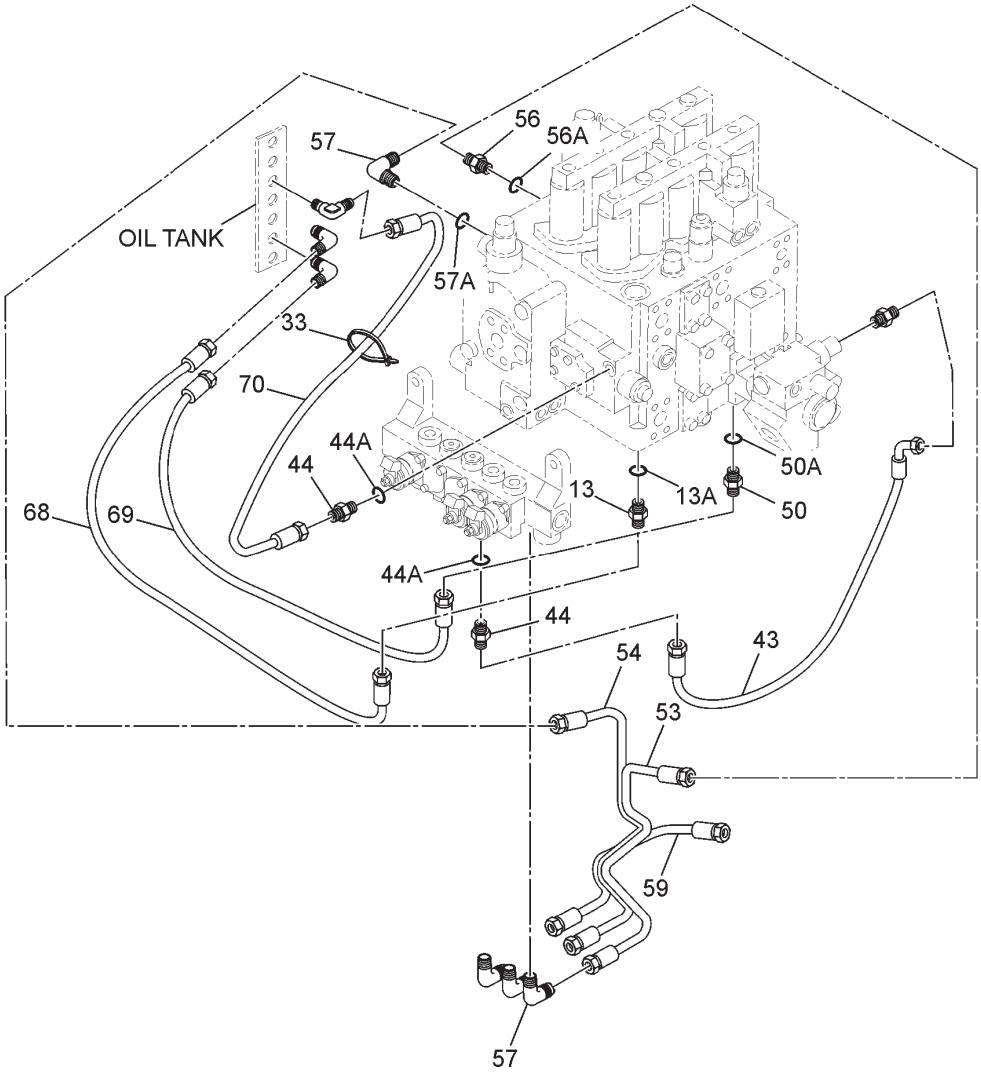

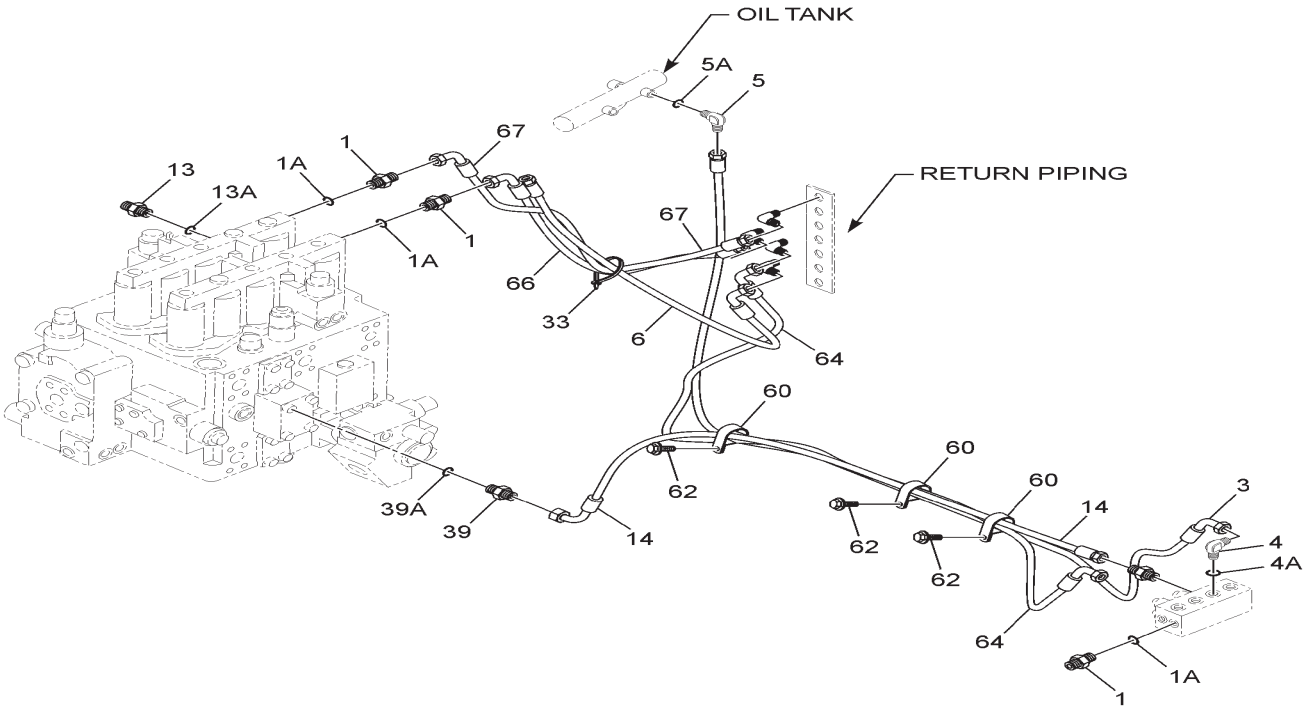

PILOT PIPING (10)

ITEM	PART NO.	PART NAME	QTY	S.C.	MACHINE SERIAL NO. ONWARDS	ICA	REPLACEABLE PART	
							PART NO.	QTY
--	**9191467**	**PILOT PIPING (10-1)**	**--**					
1	A852122	ADAPTER;S	4		0ACH-000001			
1A	Z957366	O-RING	1		0ACH-000001			
3	4386674	HOSE	1		0ACH-000001			
4	A852344	ELBOW;S	1		0ACH-000001			
4A	4506418	O-RING	1		0ACH-000001			
5	A852334	ELBOW;S	1		0ACH-000001			
5A	4509180	O-RING	1		0ACH-000001			
6	4427152	HOSE	1		0ACH-000001			
13	4390157	ADAPTER;S	1		0ACH-000001			
13A	Z957366	O-RING	1		0ACH-000001			
14	4437794	HOSE	1		0ACH-000001			
28	A852323	ELBOW; S	1		0ACH-000001			
33	4055312	CLIP;BAND	4		0ACH-000001			
39	4261937	FILTER	1		0ACH-000001			
39A	Z957366	O-RING	1		0ACH-000001			
43	4437741	HOSE;PLASTIC	1		0ACH-000001			
44	A852123	ADAPTER;S	2		0ACH-000001			
44A	Z957366	O-RING	1		0ACH-000001			
50	A852122	ADAPTER;S	1		0ACH-000001			
50A	Z957366	O-RING	1		0ACH-000001			
53	4386525	PIPE	1		0ACH-000001			
54	3079456	PIPE	1		0ACH-000001			
56	4255304	FITTING;PIPE	1		0ACH-000001			
56A	Z957366	O-RING	1		0ACH-000001			
57	4293950	ELBOW;S	5		0ACH-000001			
57A	Z957366	O-RING	1		0ACH-000001			
59	4386526	PIPE	1		0ACH-000001			
60	4190291	CLIP	5		0ACH-000001			
62	J011020	BOLT; SEMS	4		0ACH-000001			
64	4461525	HOSE	1		0ACH-000001			
66	4465685	HOSE;PLASTIC	1		0ACH-000001			
67	4465686	HOSE;PLASTIC	1		0ACH-000001			
68	4465687	HOSE;PLASTIC	1		0ACH-000001			
69	4465688	HOSE	1		0ACH-000001			
70	4465684	HOSE;PLASTIC	1		0ACH-000001			

PILOT PIPING (11)

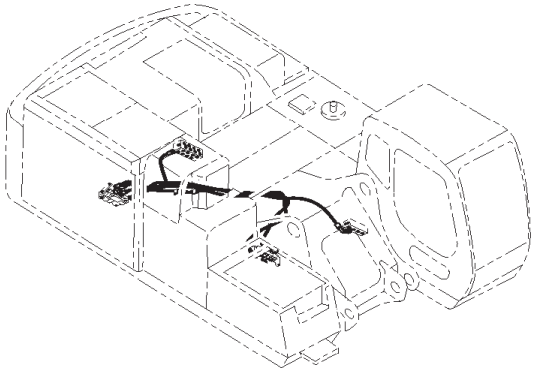

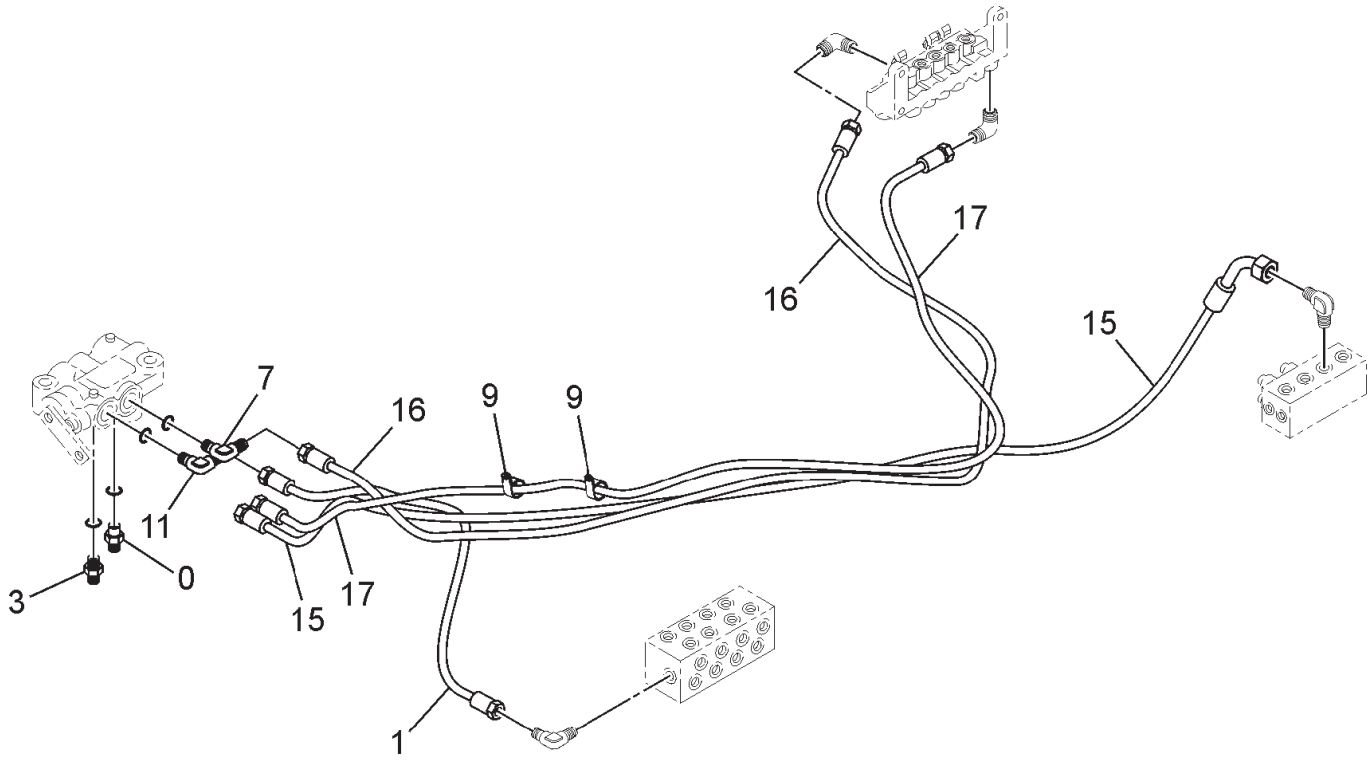

PILOT PIPING (11)

ITEM	PART NO.	PART NAME	QTY	S.C.	MACHINE SERIAL NO. ONWARDS	ICA	REPLACEABLE PART	
							PART NO.	QTY
--	**9204770**	**PILOT PIPING (11)**	**--**					
0	4346499	FILTER	1		0ACH-000001			
0A	Z975366	O-RING	1		0ACH-000001			
1	4436255	HOSE	1		0ACH-000001			
3	A852133	ADAPTER;S	1		0ACH-000001			
3A	4509180	O-RING	1		0ACH-000001			
7	A852334	ELBOW;S	1		0ACH-000001			
7A	4509180	O-RING	1		0ACH-000001			
9	4190273	CLIP	3		0ACH-000001			
11	A852333	ELBOW;S	1		0ACH-000001			
11A	4509180	O-RING	1		0ACH-000001			
15	4465401	HOSE	1		0ACH-000001			
16	4465402	HOSE	1		0ACH-000001			
17	4446127	HOSE	1		0ACH-000001			

SIDE BRANCH PIPING

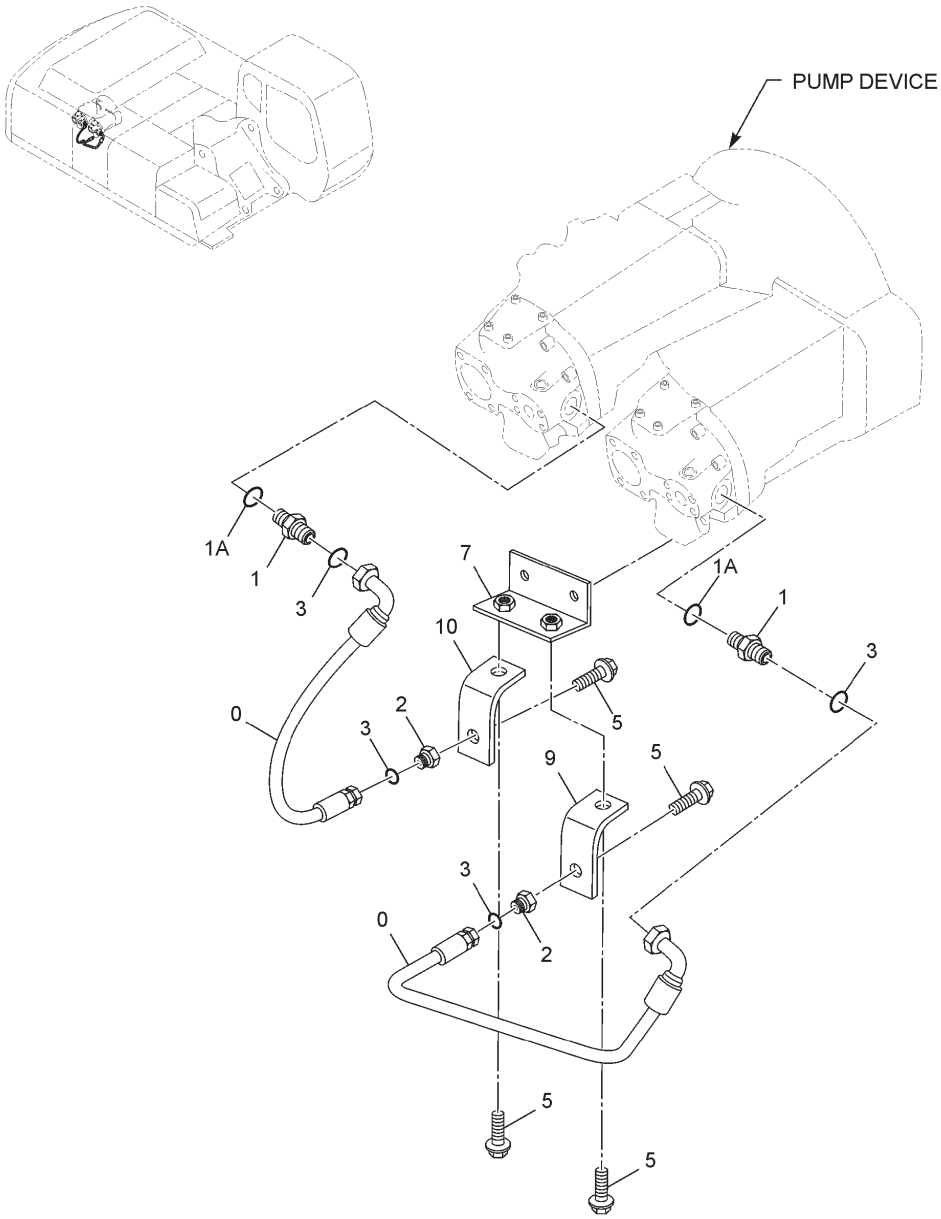

ITEM	PART NO.	PART NAME	QTY	S.C.	MACHINE SERIAL NO. ONWARDS	ICA	REPLACEABLE PART	
							PART NO.	QTY
--	**9191444**	**HOSE SIDE BRANCH**	**--**					
0	4368943	HOSE	2		0ACH-000001			
1	A853166	ADAPTER;S	2		0ACH-000001			
1A	4506424	O-RING	2		0ACH-000001			
2	4204882	PLUG	2		0ACH-000001			
3	4187308	O-RING 1BAS568	4		0ACH-000001			
5	J011235	BOLT; SEMS	4		0ACH-000001			
7	9756742	BRACKET	1		0ACH-000001			
9	4455588	BRACKET	1		0ACH-000001			
10	4455589	BRACKET	1		0ACH-000001			

BOOM BOTTOM PIPING

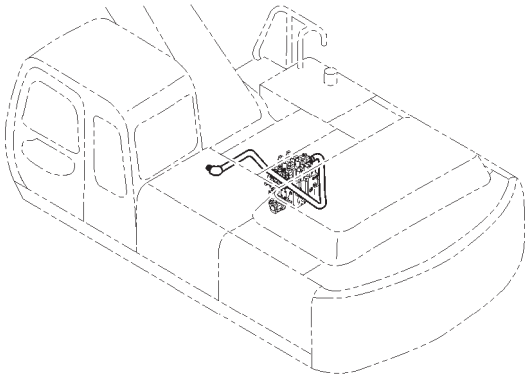

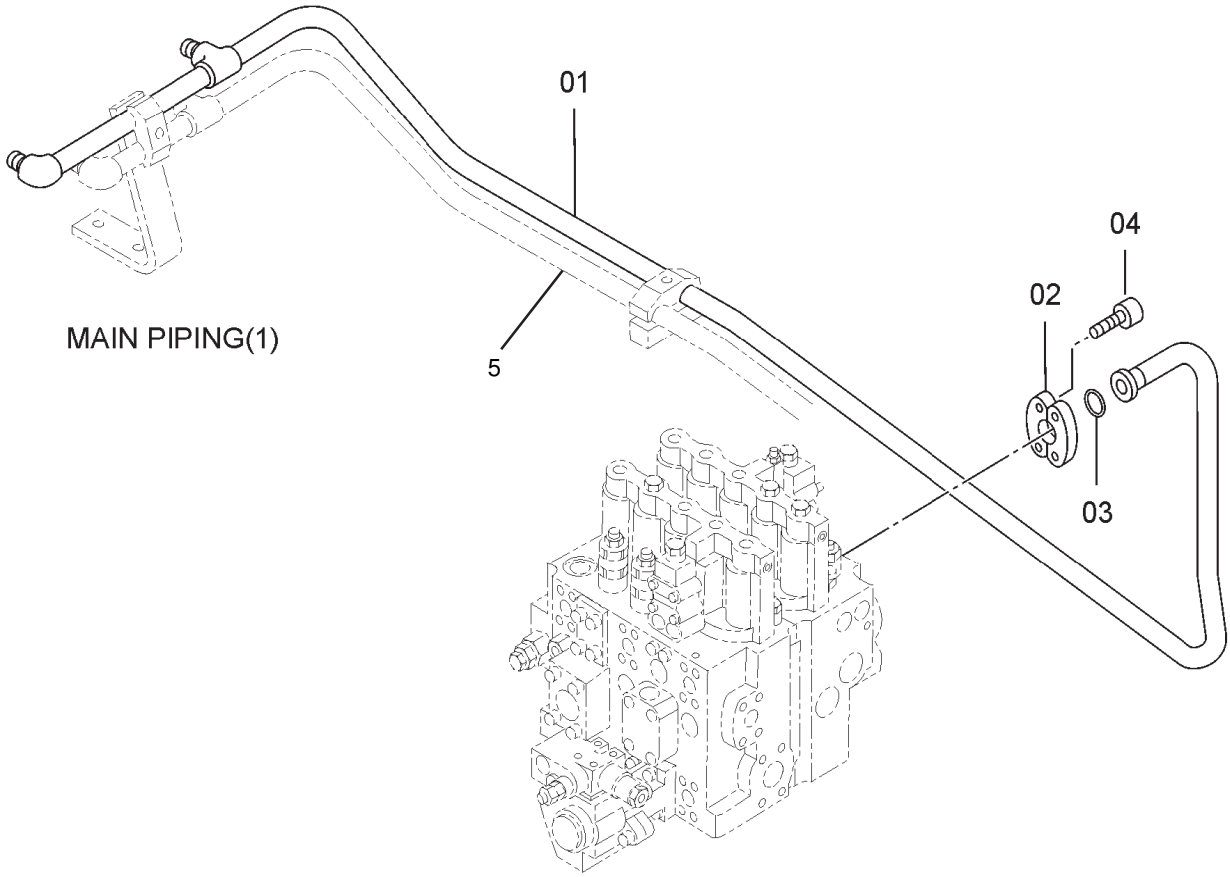

ITEM	PART NO.	PART NAME	QTY	S.C.	MACHINE SERIAL NO. ONWARDS	ICA	REPLACEABLE PART	
							PART NO.	QTY
--	**9160148**	**BOOM BOTTOM; PIPING**	**--**					
1	8069136	PIPE	1		0ACH-000001			
2	Z962453	FLANGE SPLIT	2		0ACH-000001			
3	Z966993	O-RING	1		0ACH-000001			
4	J781030	BOLT;SOCKET	4		0ACH-000001			
5	8069137	PIPE	1		0ACH-000001			

PUMP DEVICE

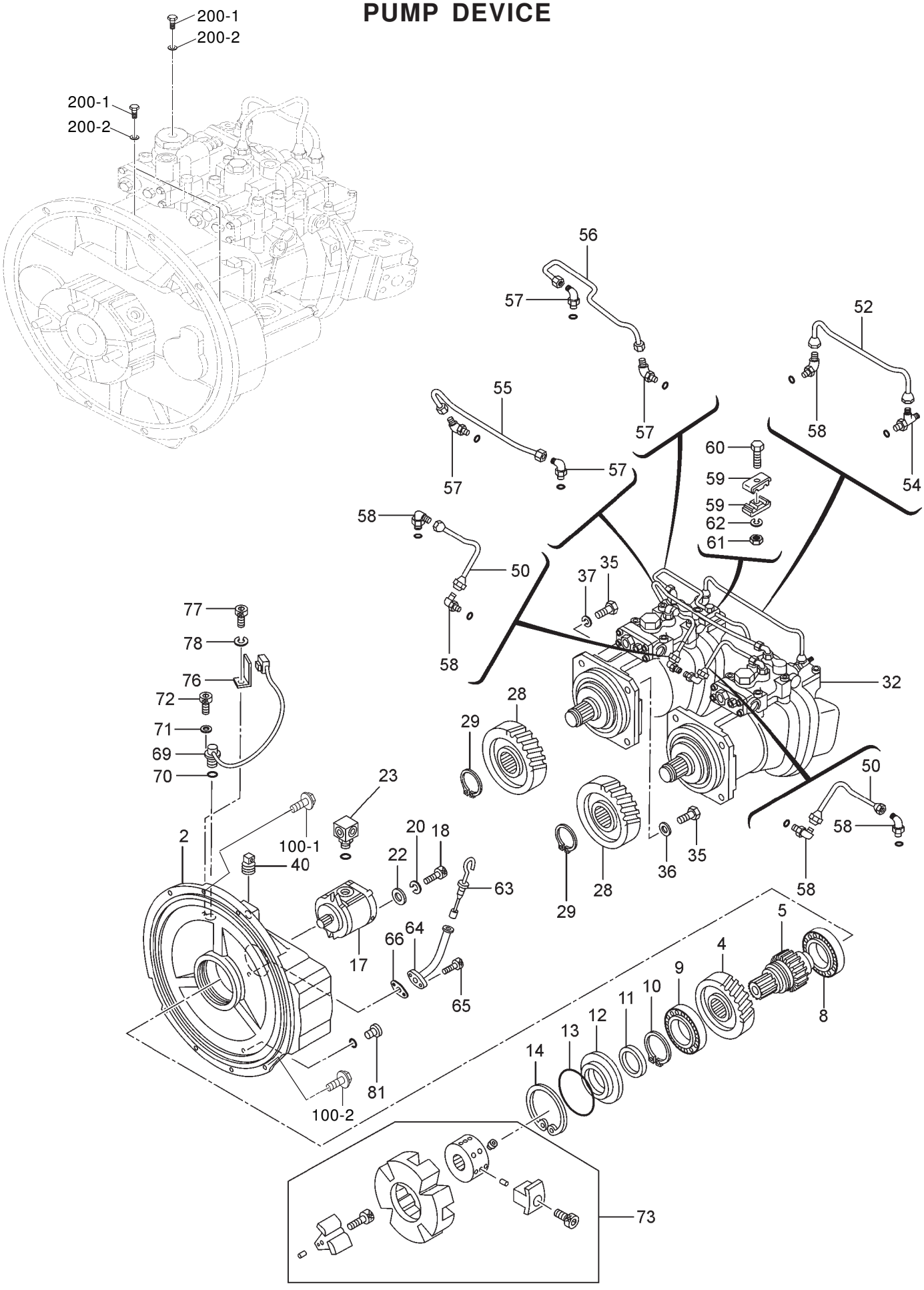

200-1
200-2
200-1
200-2
56
57
52
55
57
58
57
57
60
59
59
62
61
54
58
50
37
35
58
77
78
76
72
71
69
70
32
28
29
23
50
58
100-1
2
20
18
22
40
63
36
35
58
29
28
5
17
66
64
4
9
10
11
12
13
14
8
65
81
100-2
73

PUMP DEVICE

ITEM	PART NO.	PART NAME	QTY	S.C.	MACHINE SERIAL NO. ONWARDS	ICA	REPLACEABLE PART	
							PART NO.	QTY
--	**9195241**	**PUMP DEVICE**	**--**					
2	1028405	CASING; GEAR	1		0ACH-0000019			
4	3089266	GEAR;CENTER	1		0ACH-0000019			
5	3081085	SHAFT; CENTER	1		0ACH-0000019			
8	4395453	BRG;BALL	1		0ACH-0000019			
9	4395457	BRG;BALL	1		0ACH-0000019			
10	4191219	RING;RETAINING	1		0ACH-0000019			
11	4179833	SEA;OIL	1		0ACH-0000019			
12	3033593	COVER;T.MISSIONCM	1		0ACH-0000019			
13	4179834	O-RING	1		0ACH-0000019			
14	Z991733	RING;RETAINING	1		0ACH-0000019			
17	TC00463	PUMP;GEAR DOWTY	1		0ACH-0000019			
18	M341030	BOLT;SOCKET	2		0ACH-0000019			
20	Z984054	SPR.WASHER	2		0ACH-0000019			
22	4114402	WASHER	2		0ACH-0000019			
23	4191974	ADAPTER	1		0ACH-0000019			
28	3035853	GEAR;DRIVE	2		0ACH-0000019			
29	Z991345	CIRCLIP	2		0ACH-0000019			
32	9207291	PUMP; MAIN	2		0ACH-0000019			
35	J901645	BOLT	8		0ACH-0000019			
36	4126090	WASHER;SEAL	4		0ACH-0000019			
37	A590916	WASHER;SPRING	4		0ACH-0000019			
40	4234782	PLUG	1		0ACH-0000019			
50	4438889	PIPE	2		0ACH-0000019			
52	4438888	PIPE	1		0ACH-0000019			
54	4203485	FITTING;PIPE	1		0ACH-0000019			
55	3089617	PIPE	1		0ACH-0000019			
56	3089618	PIPE	1		0ACH-0000019			
57	4118499	FITTING;PIPE	4		0ACH-0000019			
58	4293950	ELBOW;S	5		0ACH-0000019			
59	4179843	CLAMP	2		0ACH-0000019			
60	J900830	BOLT	1		0ACH-0000019			
61	M500807	NUT	1		0ACH-0000019			
62	A590908	WASHER;SPRG	1		0ACH-0000019			
63	4242263	GAUGE LEVEL	1		0ACH-0000019			
64	4242262	PIPE;GUIDE	1		0ACH-0000019			
65	M340816	BOLT;SOCKET	2		0ACH-0000019			
66	9742779	PACKING	1		0ACH-0000019			
69	4265372	SENSOR;REVOL	1		0ACH-0000019			
70	4306888	O-RING	1		0ACH-0000019			
71	A590106	WASHER;PLANE	1		0ACH-0000019			
72	M340616	BOLT;SOCKET	1		0ACH-0000019			
73	4479978	COUPLING	1		0ACH-0000019			
76	4252767	BRACKET	1		0ACH-0000019			
77	M340613	BOLT;SOCKET	1		0ACH-0000019			
78	4169516	WASHER;SPRING	1		0ACH-0000019			
81	4092534	PLUG	1		0ACH-0000019			
100	9204030	PARTS PUMP	1		0ACH-0000019			
100-1	4609014	BOLT SEMS	5		0ACH-0000019			
100-2	4609833	BOLT SEMS	3		0ACH-0000019			
200	9264269	PARTS PUMP	3		0ACH-0000019			
200-1	J901220	BOLT	3		0ACH-0000019			
200-2	A590112	WASHER PLANE	3		0ACH-0000019			

PUMP; UNIT

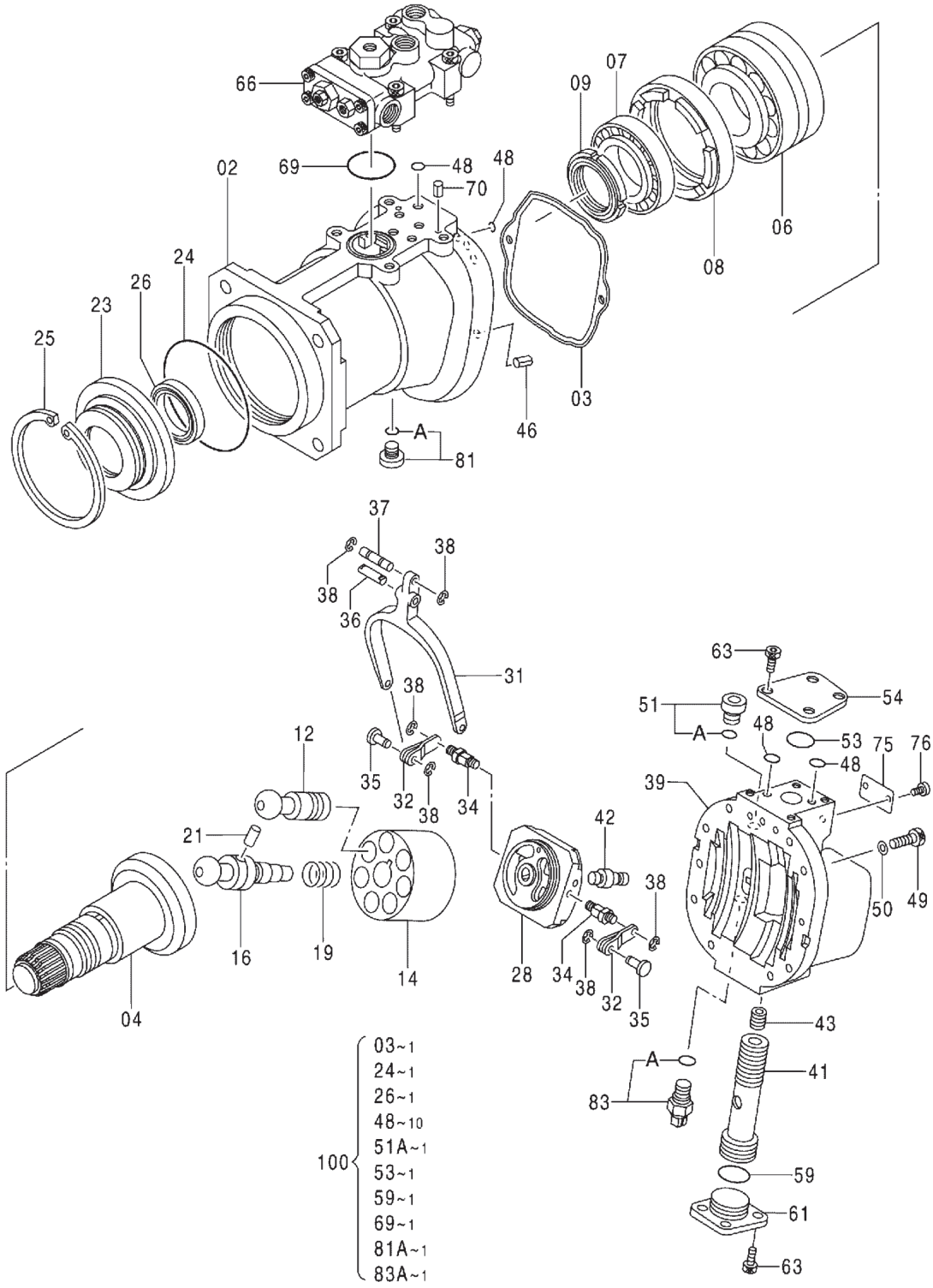
66
69
48
70
48
02
09
07
06
08
24
26
23
25
03
46
A
81
37
38
38
36
38
31
12
35
32
38
34
21
16
19
14
42
28
34
38
32
35
38
63
54
51
A
48
53
75
76
48
39
50
49
43
A
41
83
59
61
63
04
100
03~1
24~1
26~1
48~10
51A~1
53~1
59~1
69~1
81A~1
83A~1

PUMP; UNIT

ITEM	PART NO.	PART NAME	QTY	S.C.	MACHINE SERIAL NO. ONWARDS	ICA	REPLACEABLE PART	
							PART NO.	QTY
--	**9207291**	**PUMP;UNIT**	**2**					
02	1014184	* CASING;PUMP	1					
03	8068521	* PACKING	1	K				
04	2038877	* DISC;DRIVING	1					
06	4366256	* BRG.;ROL.	1					
07	4366356	* BRG.;ROL.	1					
08	3035965	* SPACER	1					
09	4191665	* NUT;BRG.	1					
12	8051275	* PISTON	7					
14	2022744	* ROTOR	1					
16	3081023	* SHAFT;CENTER	1					
19	4194362	* SPRING;COMPRES.	1					
21	4198956	* PIN	1					
23	3035966	* COVER;SEAL	1					
24	4191664	* O-RING	1	K				
25	4094325	* RING;RETAINING	1					
26	4639126	* SEAL;OIL	1	#/K				
28	9749142	* VALVE	1					
31	3039569	* LINK	1					
32	9724756	* LEVER	2					
34	4179179	* PIN	2					
35	4179177	* PIN	2					
36	4200227	* PIN	1					
37	4179176	* PIN	1					
38	4146370	* RING;RETAINING	6					
39	1022441	* HEAD	1					
41	3036326	* PISTON;SERVO	1					
42	4193245	* PIN	1					
43	4179838	* SCREW;SET	1					
41	3106174	* PISTON;SERVO	1	#				
42	4641714	* PIN	1	#				
43	4337812	* SCREW;SET	1	#				
46	4099290	* PIN;SPRING	2					
48	4180349	* O-RING	10	K				
49	M341245	* BOLT;SOCKET	8					
50	495841	* WASHER;SPRING	8					
51	9134110	* PLUG	1					
51A	957366	** O-RING	1	K				
53	4355081	* O-RING	1	K				
54	4204862	* STOPPER	1					
59	4294621	* O-RING	1	K				
61	4216295	* STOPPER	1					
63	M340820	* BOLT;SOCKET	8					
66	9207292	* REGULATOR	1	S				

Cont. Next Page. .. ...

PUMP; UNIT

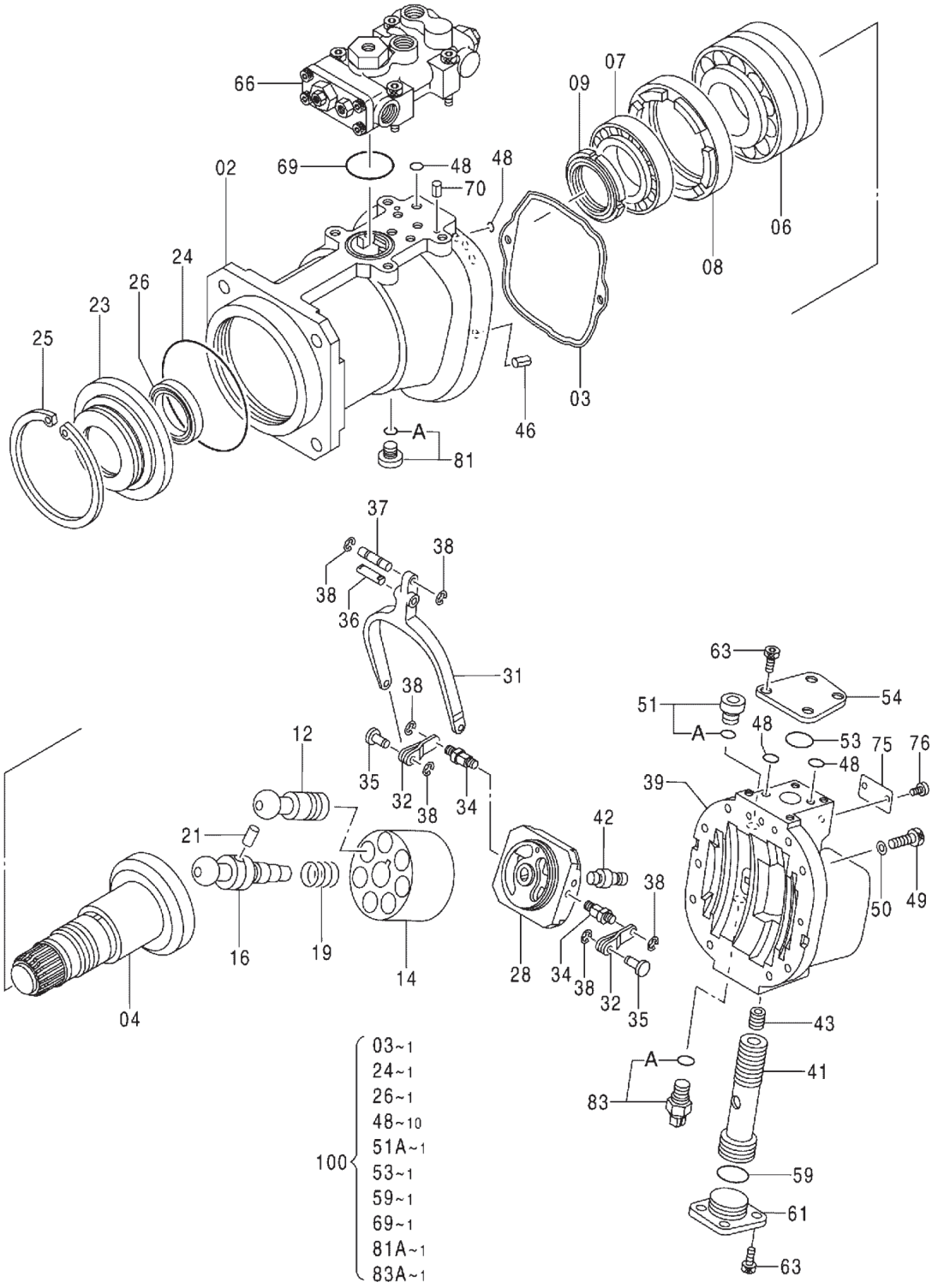
66
69
48
70
48
02
09
07
06
08
24
26
23
25
03
46
A
81
37
38
38
36
38
31
12
35
32
38
34
21
16
19
14
42
38
28
34
38
32
35
04
63
54
51
A
48
53
75
76
48
39
50
49
43
A
41
83
59
61
63
100
03~1
24~1
26~1
48~10
51A~1
53~1
59~1
69~1
81A~1
83A~1

PUMP; UNIT

ITEM	PART NO.	PART NAME	QTY	S.C.	MACHINE SERIAL NO. ONWARDS	ICA	REPLACEABLE PART	
							PART NO.	QTY
69	4348665	* O-RING	1	K				
70	4515041	* PIN;SPRING	2					
75	+++++++	* NAME-PLATE	1					
76	M492564	* SCREW;DRIVE	2					
81	9134111	* PLUG	1					
81A	4509180	** O-RING	1	K				
83	4436271	* SENSOR;PRES	1					
83A	4365826	** O-RING	1	K				
100	4467592	KIT;SEAL	1					

PUMP GEAR

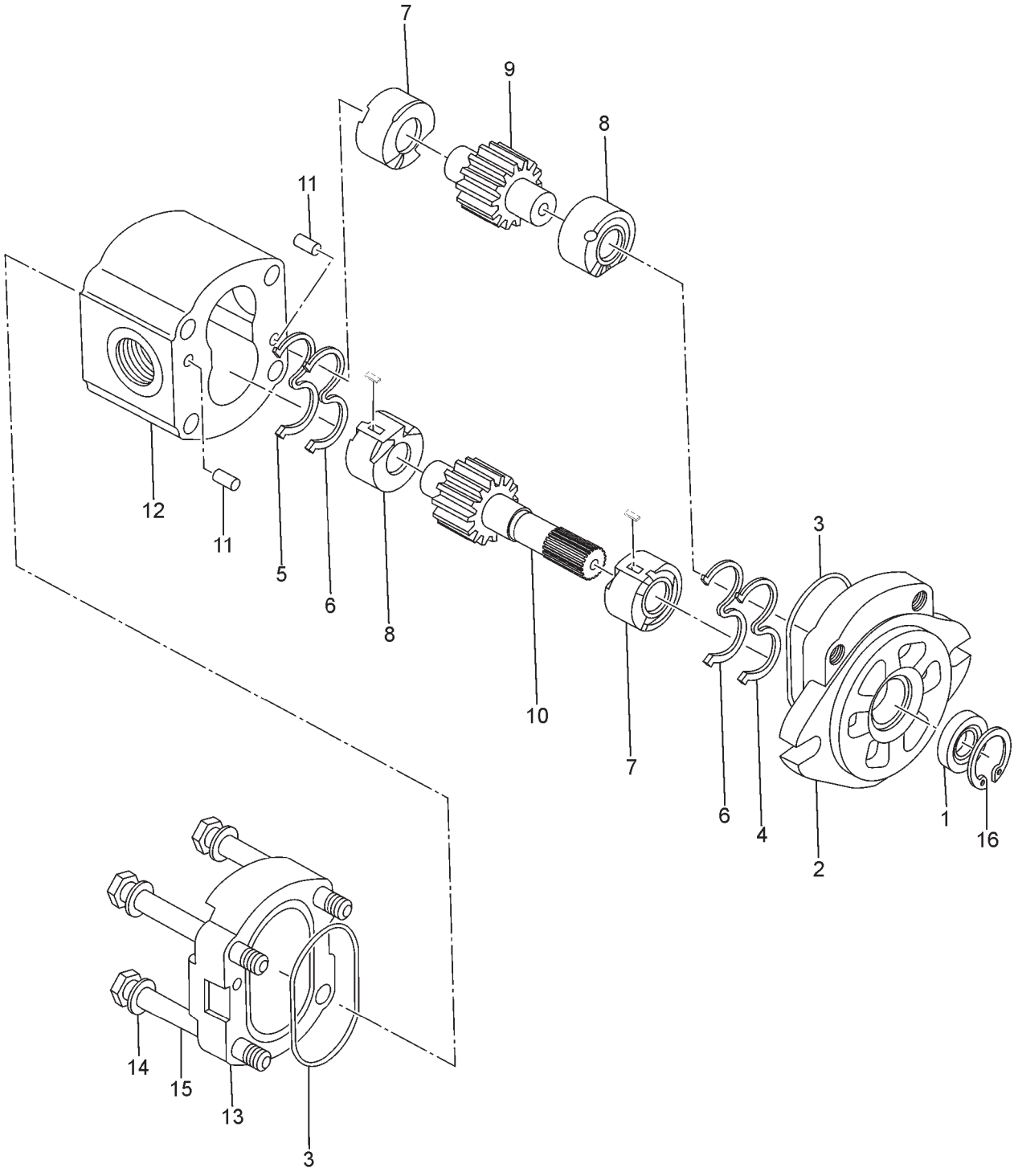

PUMP GEAR

ITEM	PART NO.	PART NAME	QTY	S.C.	MACHINE SERIAL NO. ONWARDS	ICA	REPLACEABLE PART	
							PART NO.	QTY
--	**TC00463**	**GEAR PUMP**	**--**					
1	TC00463/1	SHAFT;SEAL	2	K	0ACH-000009			
2	TC00463/2	PUMP MTG. FLANGE	1		0ACH-000009			
3	TC00463/3	BODY SEAL	2	K	0ACH-000009			
4	TC00463/4	BACKING RING LH	2	K	0ACH-000009			
5	TC00463/5	BACKING RING RH	2	K	0ACH-000009			
6	TC00463/6	LUB SEAL	2	K	0ACH-000009			
7	TC00463/7	BUSH LH	2		0ACH-000009			
8	TC00463/8	BUSH RH	2		0ACH-000009			
9	TC00463/9	DRIVEN GEAR	1		0ACH-000009			
10	TC00463/10	DRIVE SHAFT & GEAR	1		0ACH-000009			
11	TC00463/11	DOWEL PIN	2		0ACH-000009			
12	TC00463/12	PUMP BODY	1		0ACH-000009			
13	TC00463/13	PUMP COVER	1		0ACH-000009			
14	TC00463/14	SPRING WASHER	4		0ACH-000009			
15	TC00463/15	H.H. BOLT	4		0ACH-000009			
16	TC00463/16	INT. CIRCLIP TYPE B	1		0ACH-000009			
--	TC00463/17	KIT;SEAL	1		0ACH-000009			

VALVE PARTS

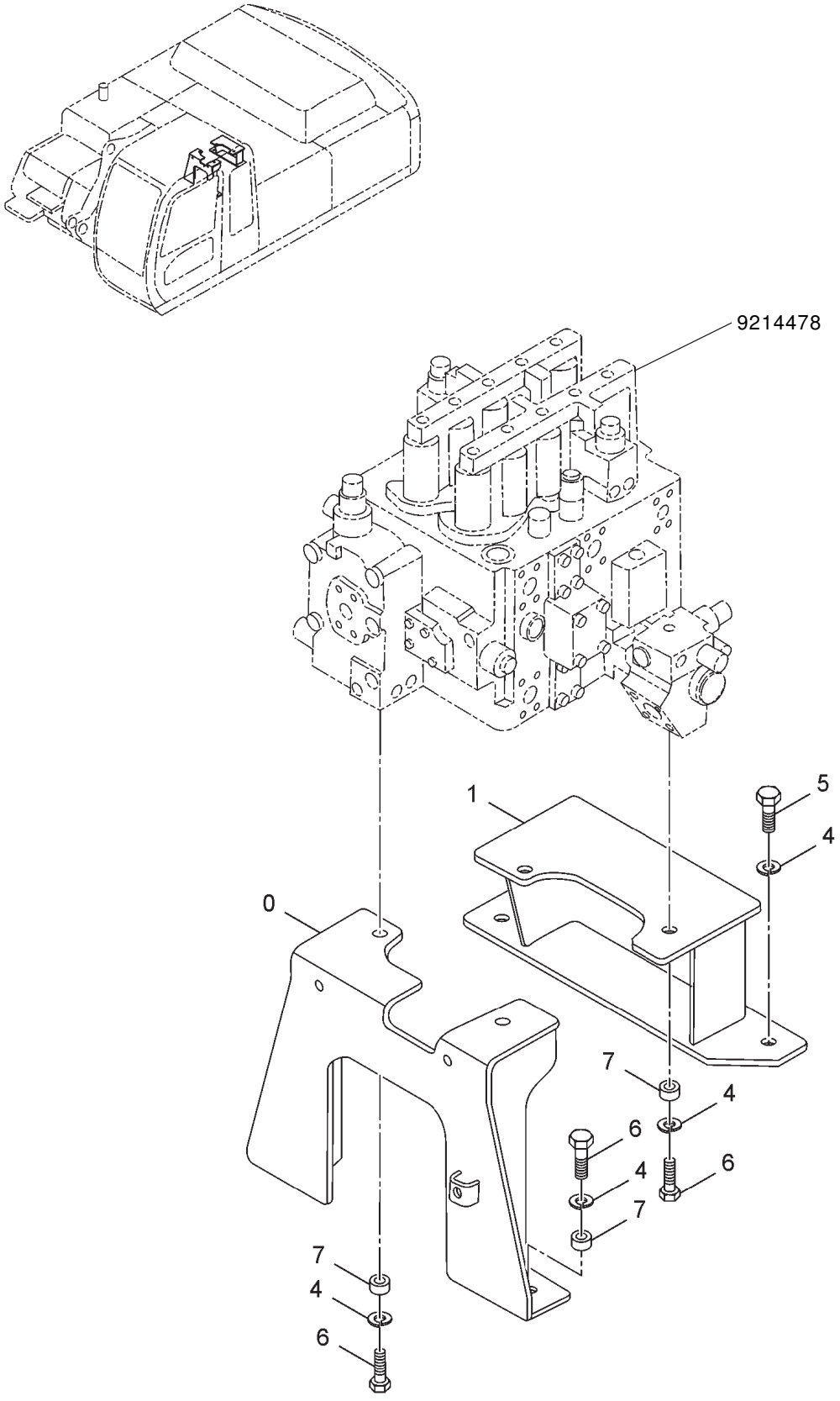

VALVE PARTS

ITEM	PART NO.	PART NAME	QTY	S.C.	MACHINE SERIAL NO. ONWARDS	ICA	REPLACEABLE PART	
							PART NO.	QTY
--	**9191451**	**PARTS VALVE**	**--**					
0	7038558	BRACKET	1		0ACH-000001			
1	8080342	BRACKET	1		0ACH-000001			
4	A590916	WASHER;SPRING	8		0ACH-000001			
5	J921645	BOLT	2		0ACH-000001			
6	J921650	BOLT	6		0ACH-000001			
7	4626882	SPACER	6		0ACH-000001			
--	9214478	VALVE CONTROL	1		0ACH-000001			

VALVE; CONTROL (1/6)

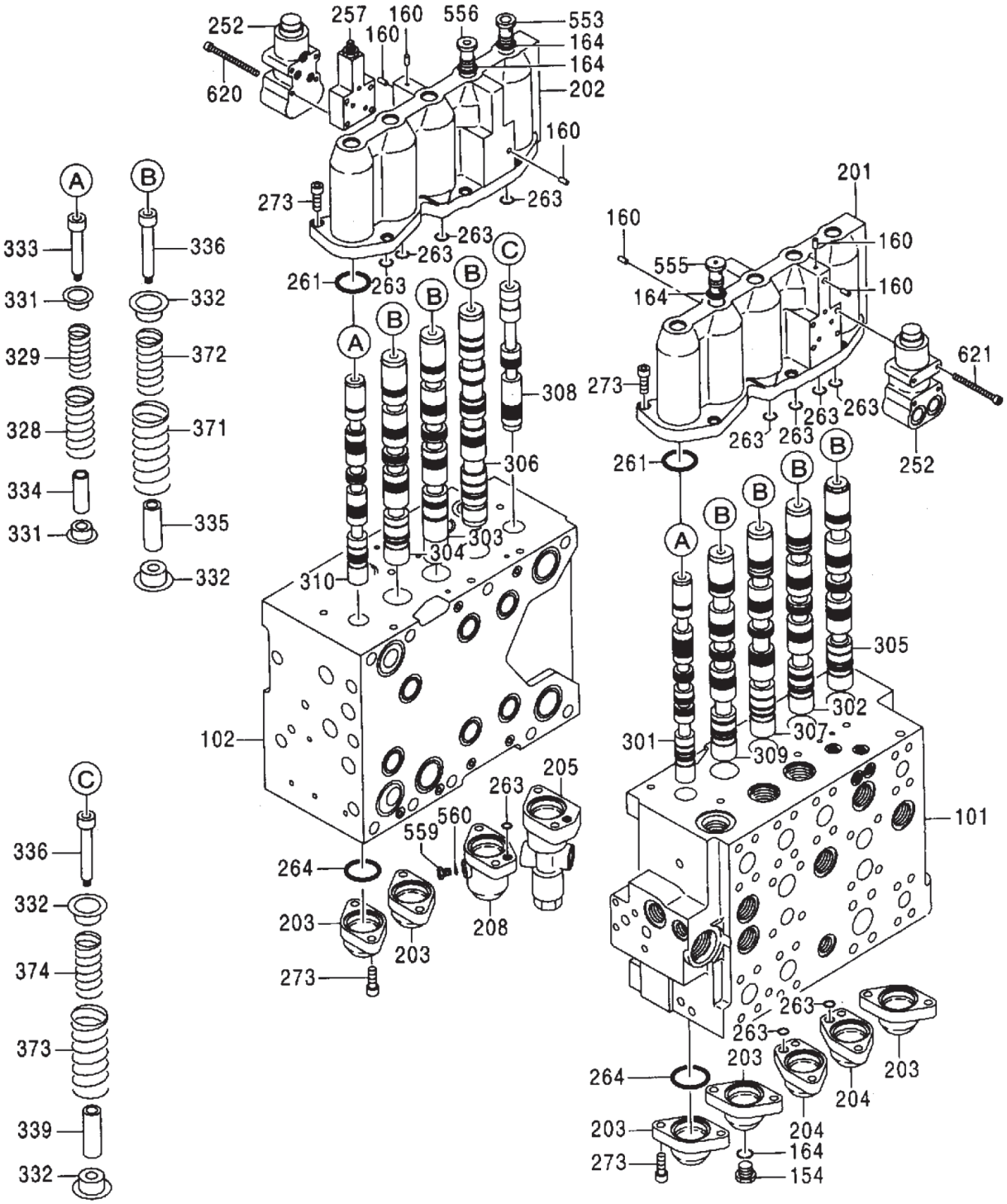

VALVE; CONTROL (1/6)

ITEM	PART NO.	PART NAME	QTY	S.C.	MACHINE SERIAL NO. ONWARDS	ICA	REPLACEABLE PART	
							PART NO.	QTY
--	**4433970**	**VALVE;CONTROL (1/6)**	**1**				**9214478**	**1**
--	**9214478**	**VALVE;CONTROL (1/6)**	**1**					
101	+++++++	* CASING	1					
102	+++++++	* CASING	1					
154	0718901	* PLUG	1					
160	0263019	* PLUG	6					
164	4509180	* O-RING	6					
201	0718902	* COVER	1					
202	0718903	* COVER	1					
203	0718904	* COVER	5					
204	0718905	* COVER	2					
205	0718906	* COVER	1					
208	0718907	* COVER	1					
252	0816301	* VALVE	2					
257	0718909	* PLATE	1					
261	A811055	* O-RING	10					
263	4506407	* O-RING	11					
264	A811040	* O-RING	8					
273	0130520	* BOLT;SOCKET	32					
301	+++++++	* SPOOL	1					
302	+++++++	* SPOOL	1					
303	+++++++	* SPOOL	1					
304	+++++++	* SPOOL	1					
305	+++++++	* SPOOL	1					
306	+++++++	* SPOOL	1					
307	+++++++	* SPOOL	1					
308	+++++++	* SPOOL	1					
309	+++++++	* SPOOL	1					
310	+++++++	* SPOOL	1					
328	+++++++	* SPRING	2					
329	+++++++	* SPRING	2					
331	+++++++	* SEAT;SPRING	4					
332	+++++++	* SEAT;SPRING	16					
333	+++++++	* BOLT	2					
334	+++++++	* STOPPER	2					
335	+++++++	* STOPPER	7					
336	+++++++	* BOLT	8					
339	+++++++	* STOPPER	1					
371	+++++++	* SPRING	7					
372	+++++++	* SPRING	7					
373	+++++++	* SPRING	1					
374	+++++++	* SPRING	1					
553	0718910	* PLUG	1					
555	0718911	* PLUG	1					
556	0718912	* PLUG	1					
559	0718913	* PLUG	1					
560	4154233	* O-RING	1					
620	0384401	* BOLT;SOCKET	4					
621	M340650	* BOLT;SOCKET	4					

VALVE; CONTROL (2/6)

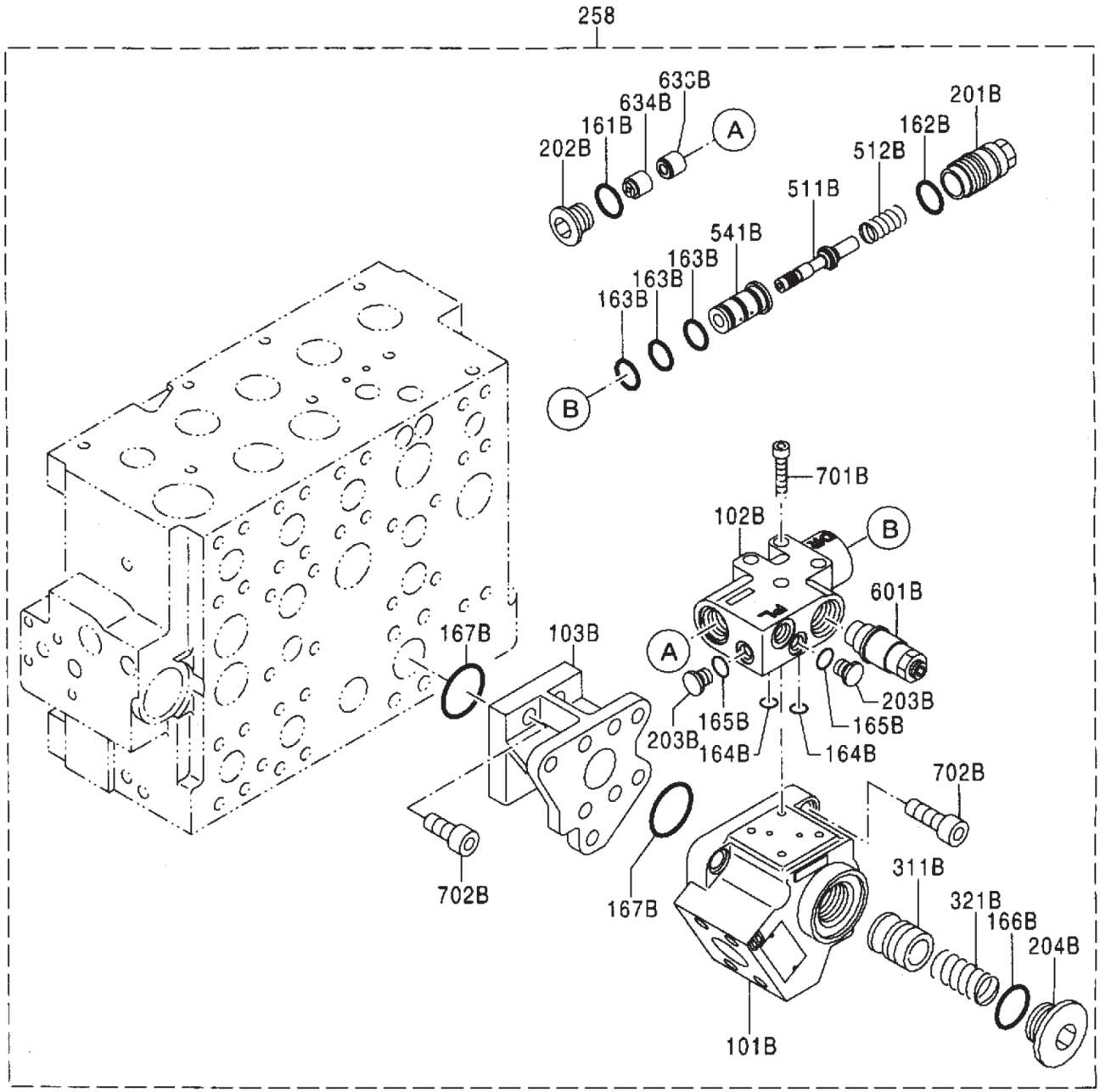

VALVE; CONTROL (2/6)

ITEM	PART NO.	PART NAME	QTY	S.C.	MACHINE SERIAL NO. ONWARDS	ICA	REPLACEABLE PART	
							PART NO.	QTY
--	**4433970**	**VALVE;CONTROL (2/6)**	**1**				**9214478**	**1**
--	**9214478**	**VALVE;CONTROL (2/6)**	**1**					
258	0816401	* VALVE;HOLDING	1					
101B	+++++++	** CASING	1					
102B	+++++++	** CASING	1					
103B	+++++++	** CASING	1					
161B	4506420	** O-RING	1					
162B	4028265	** O-RING	1					
163B	4506416	** O-RING	3					
164B	4506407	** O-RING	2					
165B	4506408	** O-RING	2					
166B	4506429	** O-RING	1					
167B	970860	** O-RING	2					
201B	0719002	** PLUG	1					
202B	0719003	** PLUG	1					
203B	0719004	** PLUG	2					
204B	0719005	** PLUG	1					
311B	0816402	** POPPET	1					
321B	0719007	** SPRING	1					
511B	+++++++	** SPOOL	1					
512B	0719008	** SPRING	1					
541B	0719009	** BUSHING	1					
601B	0719010	** VALVE;RELIEF	1					
633B	0719011	** PISTON	1					
634B	0719012	** PISTON	1					
701B	0218824	** BOLT;SOCKET	4					
702B	M341232	** BOLT;SOCKET	8					

VALVE; CONTROL (3/6)

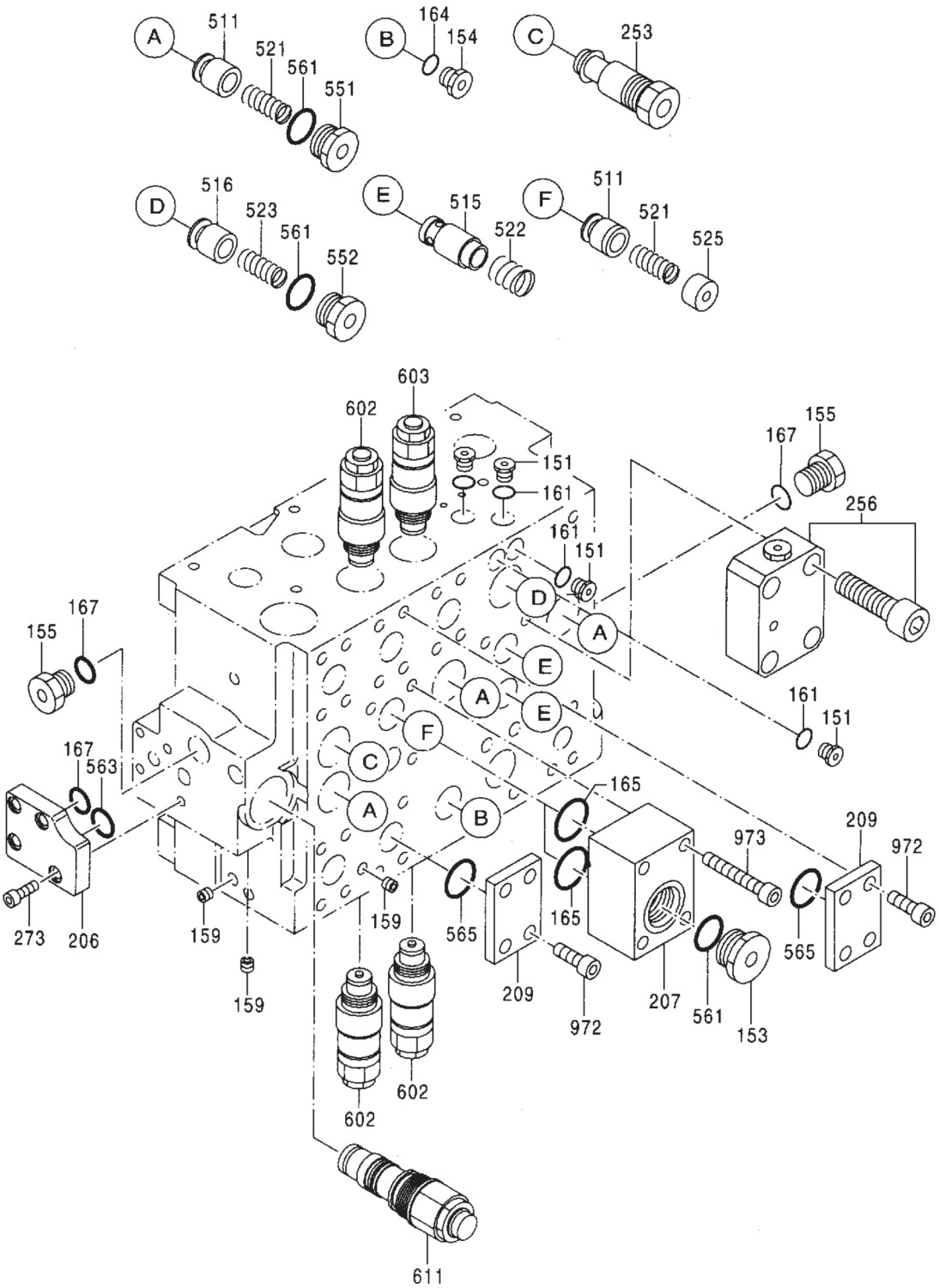

VALVE; CONTROL (3/6)

ITEM	PART NO.	PART NAME	QTY	S.C.	MACHINE SERIAL NO. ONWARDS	ICA	REPLACEABLE PART	
							PART NO.	QTY
--	**4433970**	**VALVE;CONTROL (3/6)**	**1**				**9214478**	**1**
--	**9214478**	**VALVE;CONTROL (3/6)**	**1**					
151	0719004	* PLUG	4					
153	0697911	* PLUG	1					
154	0718901	* PLUG	1					
155	0719101	* PLUG	2					
159	0451028	* PLUG	3					
161	4506408	* O-RING	4					
164	4509180	* O-RING	1					
165	0443404	* O-RING	2					
167	4506418	* O-RING	3					
206	0719102	* COVER	1					
207	0719103	* COVER	1					
209	0719104	* FLANGE	2					
253	0719105	* VALVE	1					
256	0816501	* FLANGE	1					
273	0130520	* BOLT;SOCKET	4					
511	0719107	* POPPET	4					
515	0719108	* POPPET	2					
516	0719109	* POPPET	1					
521	0719110	* SPRING	4					
522	0719111	* SPRING	2					
523	0719112	* SPRING	1					
525	0719113	* SPACER	1					
551	0719114	* PLUG	3					
552	0719115	* PLUG	1					
561	4506424	* O-RING	5					
563	985099	* O-RING	1					
565	A811030	* O-RING	2					
602	0719116	* VALVE;RELIEF	3					
603	0719117	* VALVE;RELIEF	1					
611	0719118	* VALVE	1					
972	4515013	* BOLT;SOCKET	8					
973	0237903	* BOLT;SOCKET	4					

VALVE; CONTROL (4/6)

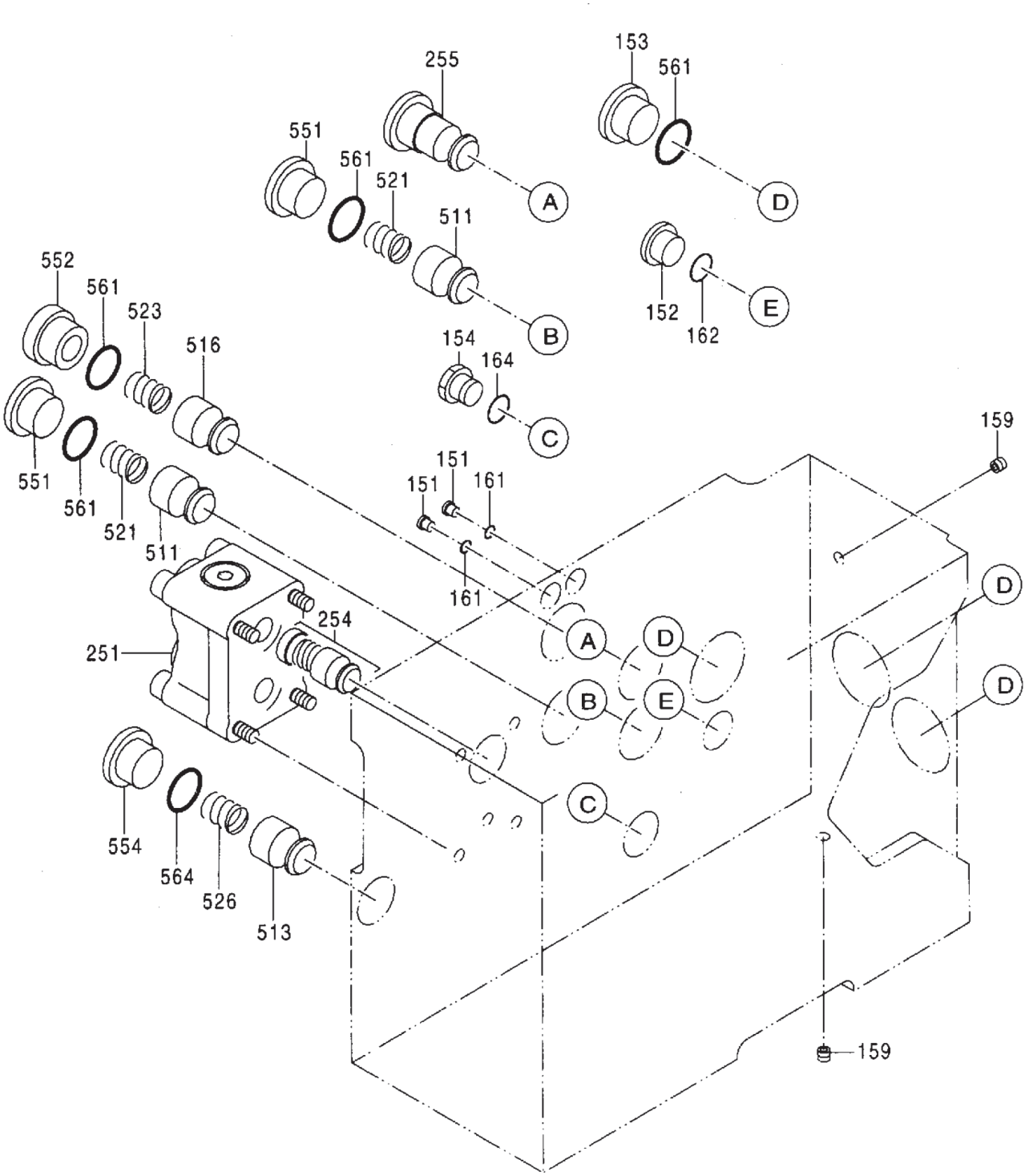

VALVE; CONTROL (4/6)

ITEM	PART NO.	PART NAME	QTY	S.C.	MACHINE SERIAL NO. ONWARDS	ICA	REPLACEABLE PART	
							PART NO.	QTY
--	**4433970**	**VALVE;CONTROL (4/6)**	**1**				**9214478**	**1**
--	**9214478**	**VALVE;CONTROL (4/6)**	**1**					
151	0719004	* PLUG	2					
152	0629404	* PLUG	1					
153	0697911	* PLUG	3					
154	0718901	* PLUG	1					
159	0451028	* PLUG	2					
161	4506408	* O-RING	2					
162	957366	* O-RING	1					
164	4509180	* O-RING	1					
251	0719201	* VALVE	1					
254	0719202	* VALVE	1					
255	0719203	* VALVE	1					
511	0719107	* POPPET	2					
513	0719204	* POPPET	1					
516	0719109	* POPPET	1					
521	0719110	* SPRING	2					
523	0719112	* SPRING	1					
526	0719205	* SPRING	1					
551	0719114	* PLUG	2					
552	0719115	* PLUG	1					
554	0719003	* PLUG	1					
561	4506424	* O-RING	6					
564	4506420	* O-RING	1					

VALVE; CONTROL (5/6)

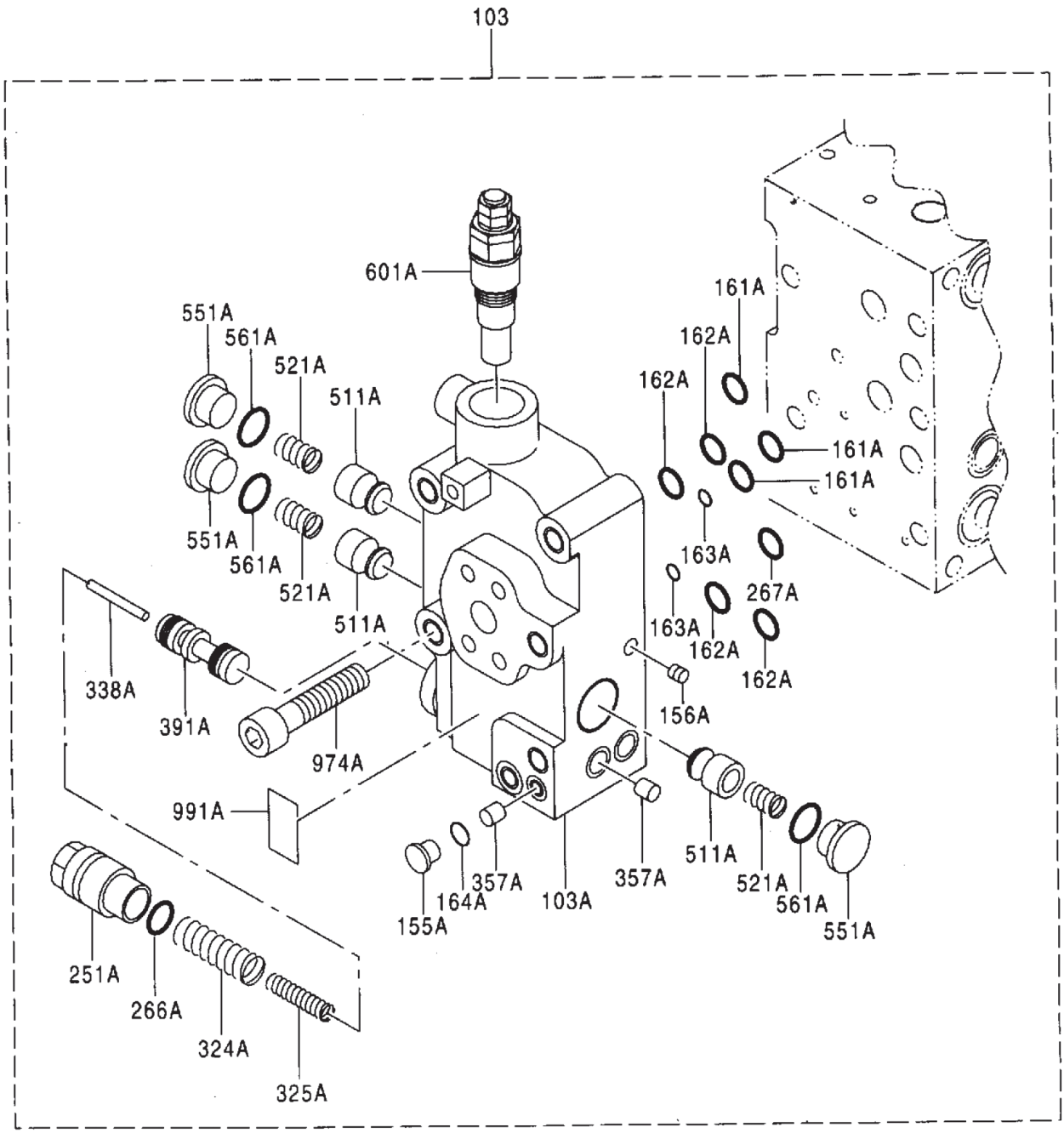

VALVE; CONTROL (5/6)

ITEM	PART NO.	PART NAME	QTY	S.C.	MACHINE SERIAL NO. ONWARDS	ICA	REPLACEABLE PART	
							PART NO.	QTY
--	**4433970**	**VALVE;CONTROL (5/6)**	**1**				**9214478**	**1**
--	**9214478**	**VALVE;CONTROL (5/6)**	**1**					
103	0816701	* BLOCK	1					
103A	+++++++	** BLOCK	1					
155A	0719004	** PLUG	1					
156A	0263019	** PLUG	1					
161A	0443404	** O-RING	3					
162A	0443803	** O-RING	4					
163A	0443405	** O-RING	2					
164A	4506408	** O-RING	1					
251A	0719302	** PLUG	1					
266A	A811025	** O-RING	1					
267A	0682503	** O-RING	1					
324A	0719303	** SPRING	1					
325A	0719304	** SPRING	1					
338A	0719305	** STOPPER	1					
357A	0719306	** ORIFICE	2					
391A	+++++++	** SPOOL	1					
511A	0816702	** POPPET	3					
521A	0719110	** SPRING	3					
551A	0719114	** PLUG	3					
561A	4506424	** O-RING	3					
601A	0719308	** VALVE;RELIEF	1					
974A	0719309	** BOLT;SOCKET	5					
991A	0628615	** NAME-PLATE	1					

VALVE; CONTROL (6/6)

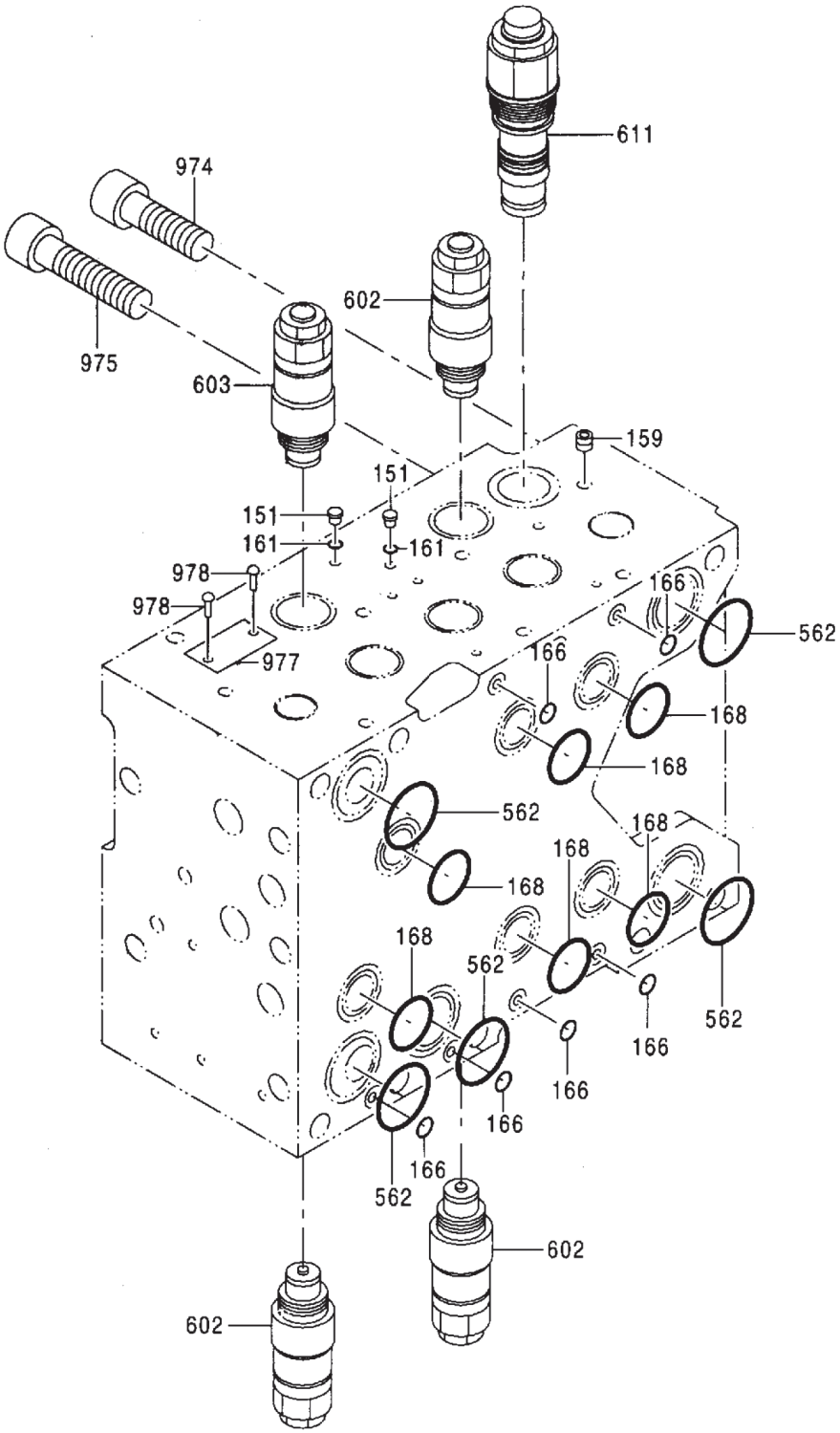

VALVE; CONTROL (6/6)

ITEM	PART NO.	PART NAME	QTY	S.C.	MACHINE SERIAL NO. ONWARDS	ICA	REPLACEABLE PART	
							PART NO.	QTY
--	**4433970**	**VALVE;CONTROL (6/6)**	**1**				**9214478**	**1**
--	**9214478**	**VALVE;CONTROL (6/6)**	**1**					
151	0719004	* PLUG	2					
159	0451028	* PLUG	1					
161	4506408	* O-RING	2					
166	0443405	* O-RING	6					
168	0719401	* O-RING	6					
562	0719402	* O-RING	5					
602	0719116	* VALVE;RELIEF	3					
603	0719117	* VALVE;RELIEF	1					
611	0719118	* VALVE	1					
974	0719403	* BOLT;SOCKET	1					
975	0719404	* BOLT;SOCKET	8					
977	+++++++	* NAME-PLATE	1					
978	+++++++	* PIN	2					

VALVE SOLENOID

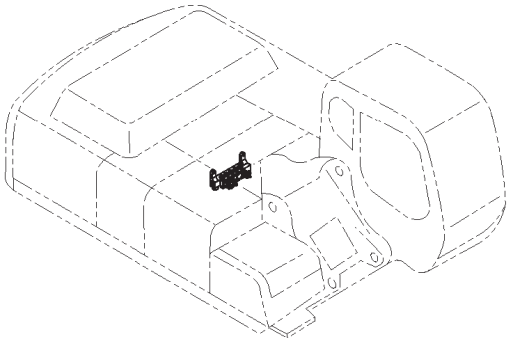

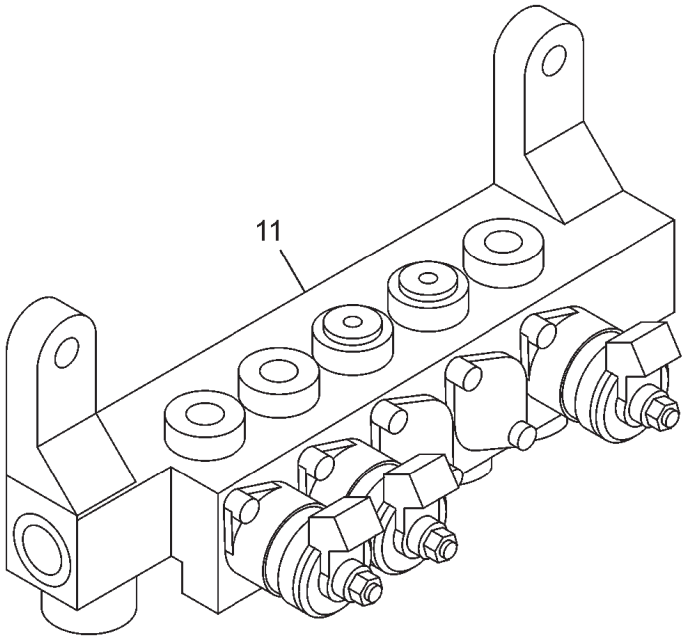

ITEM	PART NO.	PART NAME	QTY	S.C.	MACHINE SERIAL NO. ONWARDS	ICA	REPLACEABLE PART	
							PART NO.	QTY
11	9282722	VALVE;SOLENOID	1		0ACH-000001			

WINDOW WASHER ASSY.

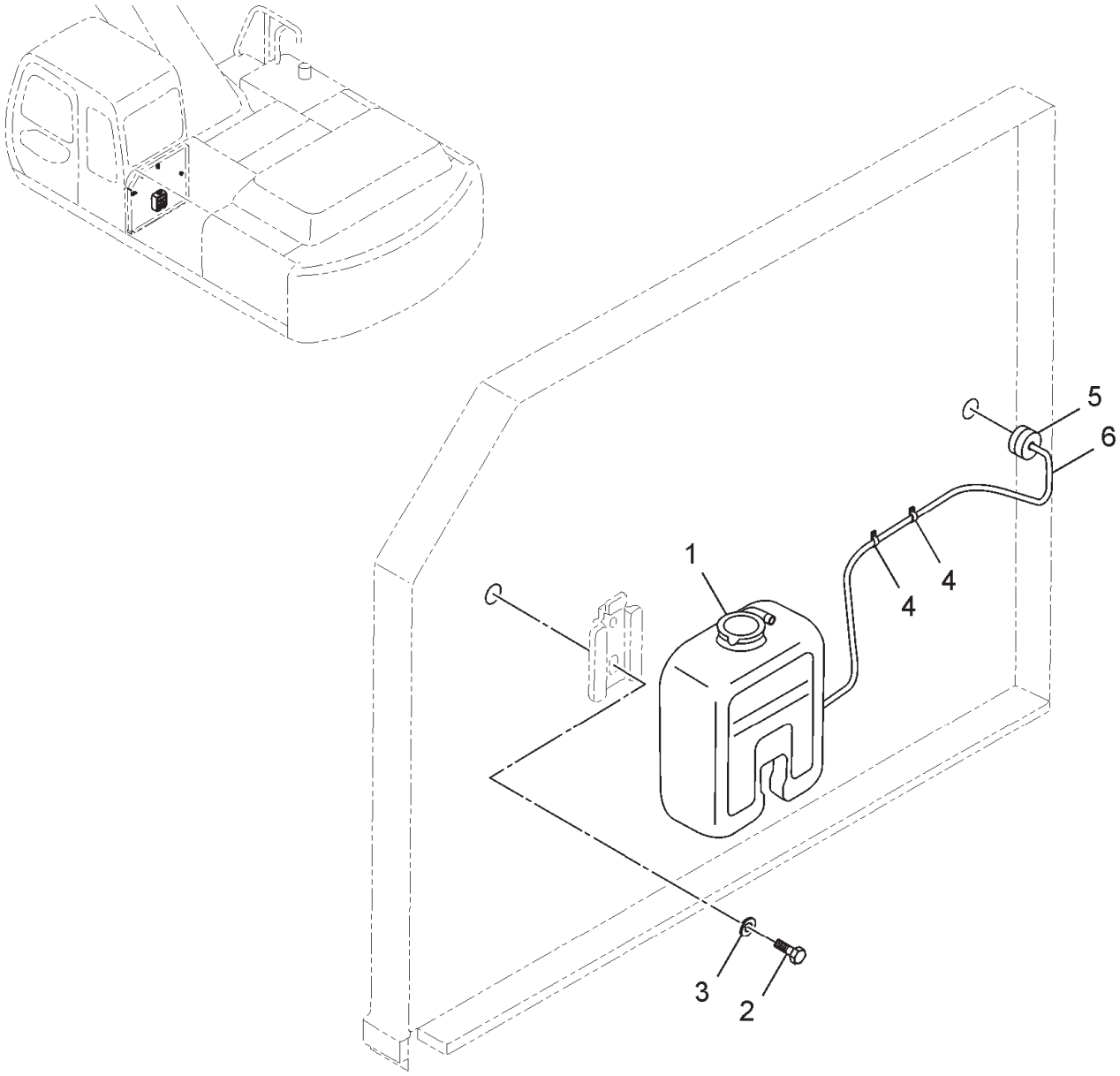

ITEM	PART NO.	PART NAME	QTY	S.C.	SERIAL NO.	ICA	REPLACEABLE PART	
							PART NO.	QTY
--	**TE07276**	**WINDOW WASHER ASSY.**	**--**					
1	257382240101	WASHING KIT; 24V	1		0ACH-000001			
2	J900616	BOLT	2		0ACH-000001			
3	A590906	WASHER;SPRING;M	2		0ACH-000001			
4	TE03072	CLIP	5		0ACH-000001			
5	0009971881J	GROMET	1		0ACH-000001			
6	4334203	HOSE;VINYL	1		0ACH-000001			

CAB GROUP

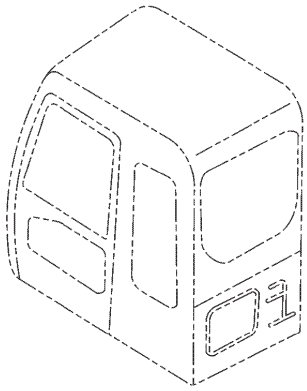

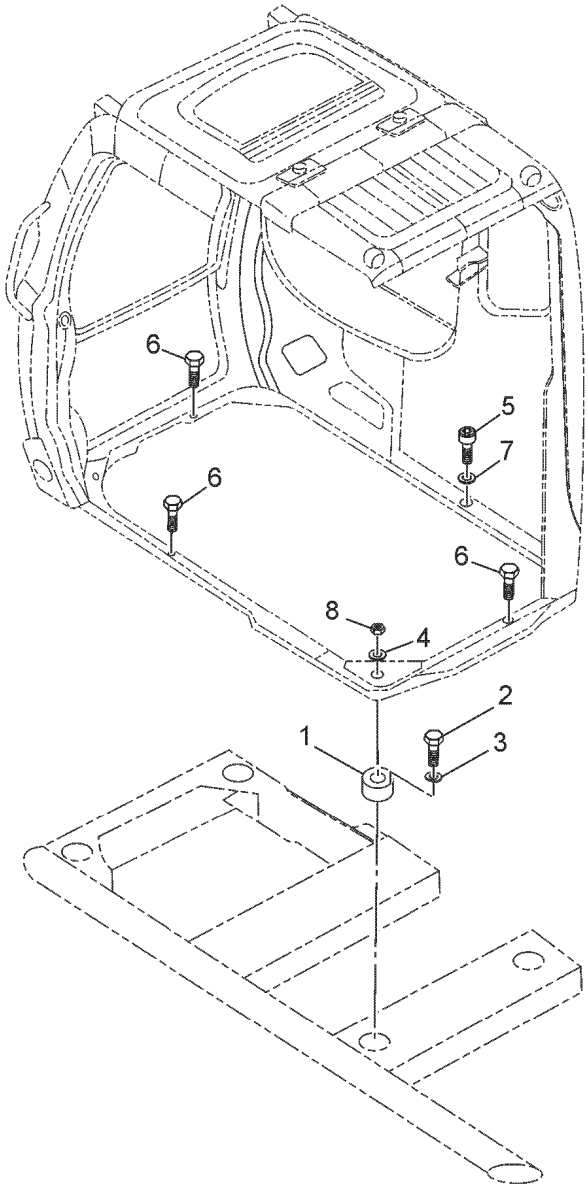

ITEM	PART NO.	PART NAME	QTY	S.C.	MACHINE SERIAL NO. ONWARDS	ICA	REPLACEABLE PART	
							PART NO.	QTY
--	**TE07230**	**CAB GROUP**	**--**					
1	4409999	RUBBER	4		0ACH-000001			
2	4330785	BOLT	8		0ACH-000001			
3	A590912	WASHER;SPRING	8		0ACH-000001			
4	J222016	WASHER	4		0ACH-000001			
5	J781035	BOLT;SOCKET;	4		0ACH-000001			
6	J901030	BOLT	5		0ACH-000001			
7	J222010	WASHER	9		0ACH-000001			
8	M660016	NUT	4		0ACH-000001			
9	9232304	CAB	1		0ACH-000001			

CAB GUARD

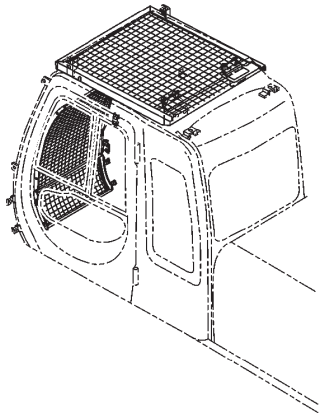

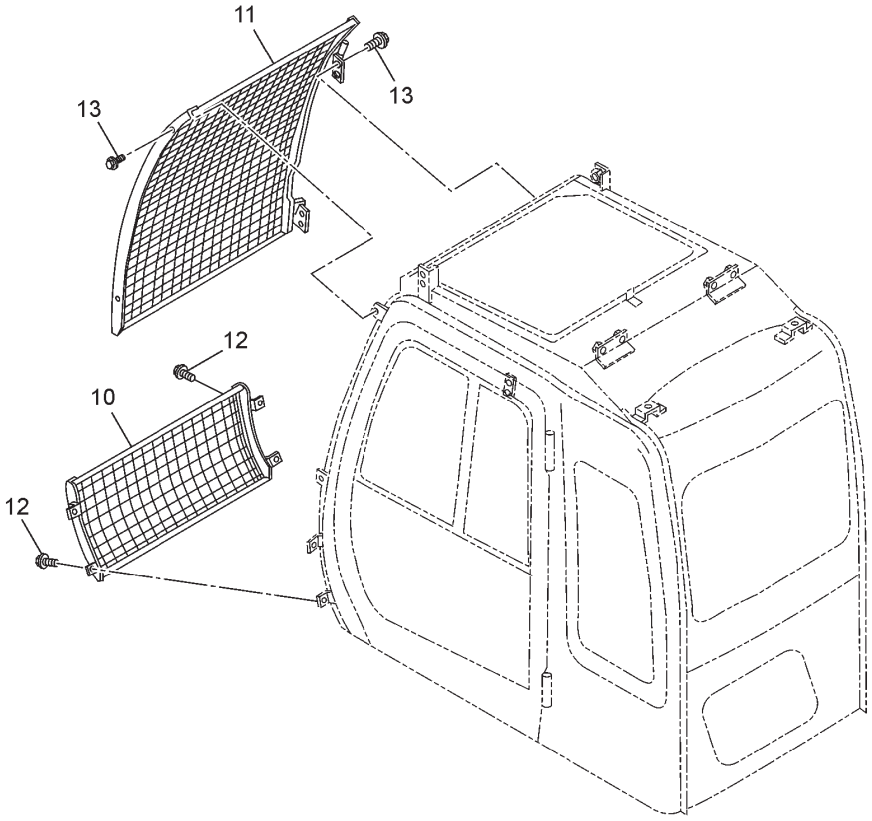

ITEM	PART NO.	PART NAME	QTY	S.C.	MACHINE SERIAL NO. ONWARDS	ICA	REPLACEABLE PART	
							PART NO.	QTY
--	**TE07230**	**CAB GROUP**	**--**					
10	4452469	GUARD	1		0ACH-000001			
11	4452468	GUARD	1		0ACH-000001			
12	J281030	BOLT;SEMS	6		0ACH-000001			
13	J271030	BOLT;SEMS	4		0ACH-000001			
14	8061721	STAY	1		0ACH-000001			
15	TE09089	MIRROR ASSY. LH	1		0ACH-000001			
16	4373196	CLAMP	1		0ACH-000001			
17	J010845	BOLT; SEMS	2		0ACH-000001			

SEAT STAND

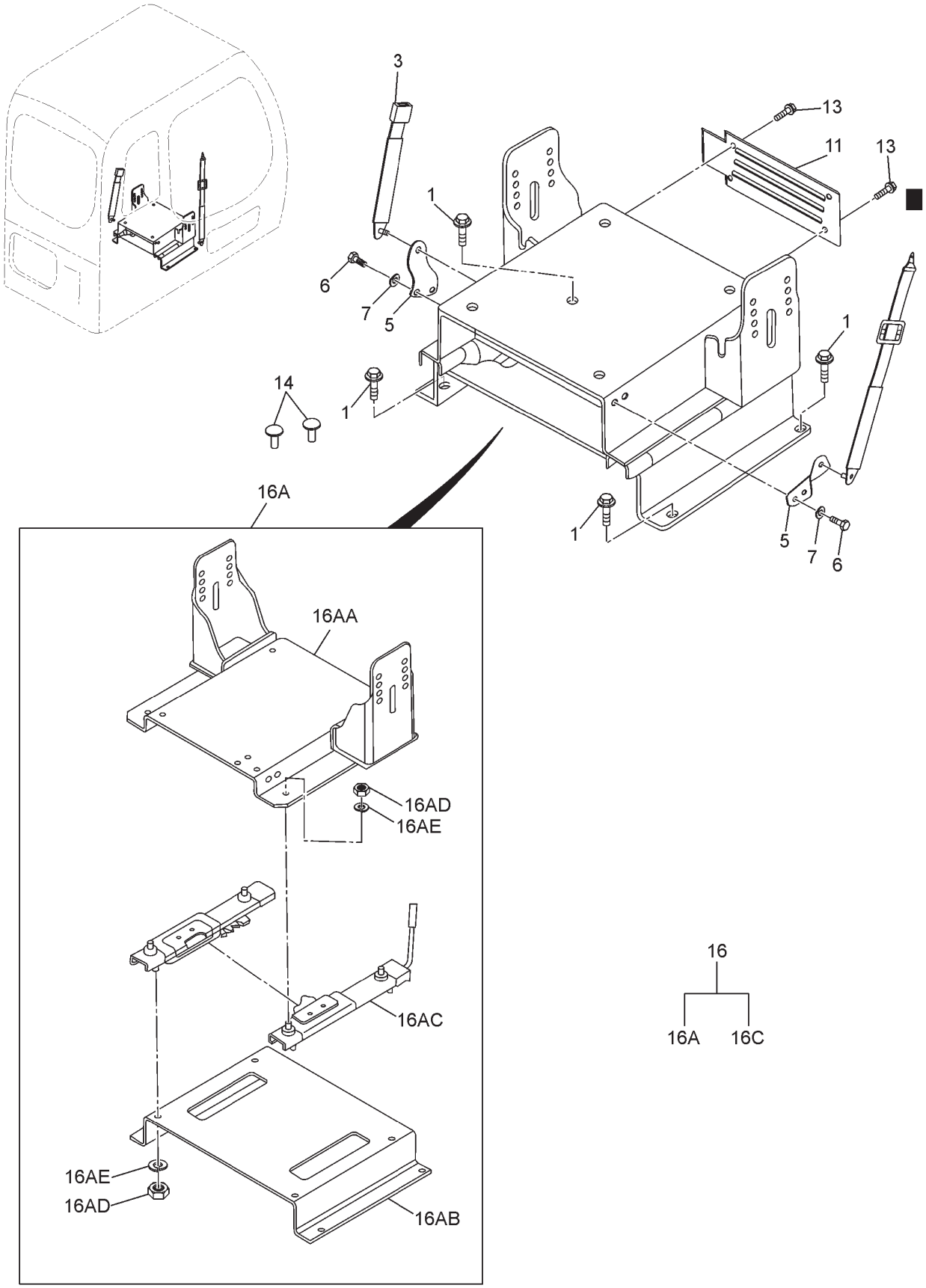
3
13
11
13
1
6
7
5
1
14
1
1
5
7
6
16A
16AA
16AD
16AE
16AC
16AE
16AD
16AB
16
16A
16C

SEAT STAND

ITEM	PART NO.	PART NAME	QTY	S.C.	MACHINE SERIAL NO. ONWARDS	ICA	REPLACEABLE PART	
							PART NO.	QTY
--	**TB01474**	**STAND**	**--**					
1	J011025	BOLT; SEMS	4		0ACH-000001			
3	E14001330	SEAT BELT WITH SWITCH	1		0ACH-000004			
5	4401294	BELT	2		0ACH-000006			
6	4235232	BOLT	2		0ACH-000001			
7	J219167	WASHER;SPRING	4		0ACH-000001			
8	4333835	BOLT	2		0ACH-000006			
9	4453874	SPACER	2		0ACH-000006			
14	4280359	CLIP	2		0ACH-000001			
16	TE08593	SEAT BASE	1		0ACH-000120			
16A	TE08592	SEAT BASE	1		0ACH-000120			
16AA	6020125	CARRIER	1		0ACH-000001			
16AB	3089486	STAND	1		0ACH-000001			
16AC	4405128	SLIDER	1		0ACH-000001			
16AD	J952010	NUT	8		0ACH-000001			
16AE	A590910	SPR.WASHER	8		0ACH-000001			
16B	J271025	BOLT; SEMS	4		0ACH-000001			
16C	4280359	CLIP	2		0ACH-000001			

SEAT ASSY.

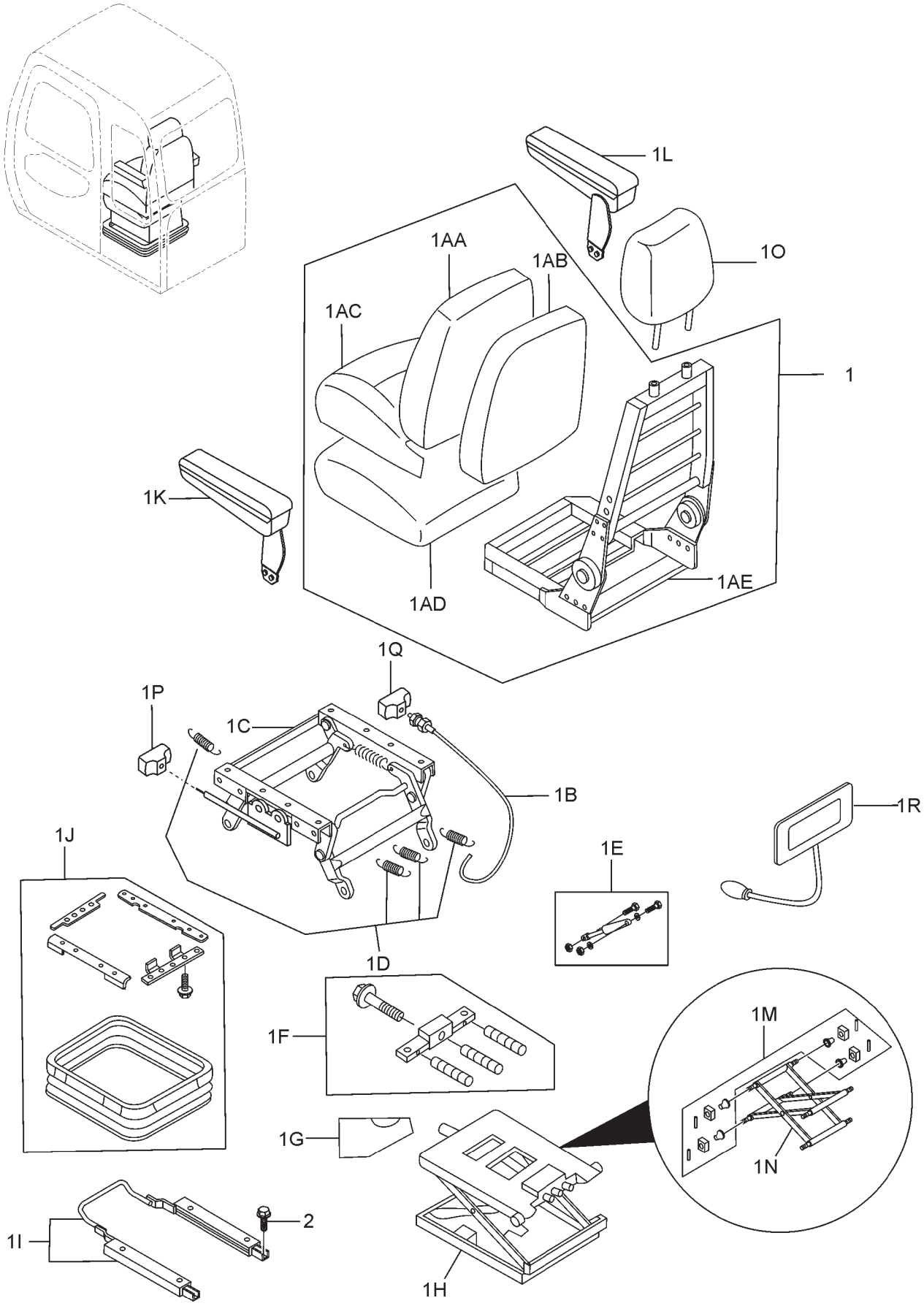
1L
1AA
1AB
1O
1AC
1
1K
1AD
1AE
1Q
1P
1C
1B
1R
1J
1E
1D
1F
1M
1G
1N
2
1I
1H

SEAT ASSY

ITEM	PART NO.	PART NAME	QTY	S.C.	MACHINE SERIAL NO. ONWARDS	ICA	REPLACEABLE PART	
							PART NO.	QTY
--	**TE07271**	**SEAT ASSY.**	**--**					
1	4454406	SEAT; OPERATOR'S	1		0ACH-000001			
1A	4456380	SEAT	1		0ACH-000001			
1AA	4456381	COVER;BLACK	1		0ACH-000001			
1AB	4392796	PAD;BACK	1		0ACH-000001			
1AC	4453664	COVER;SEAT	1		0ACH-000001			
1AD	4392798	PAD;SEAT	1		0ACH-000001			
1AE	4392799	FRAME;SEAT	1		0ACH-000001			
1B	4392800	CABLE	1		0ACH-000001			
1C	4392801	SAND	1		0ACH-000001			
1D	4392802	SPRING	1		0ACH-000001			
1E	4392803	DAMPER	1		0ACH-000001			
1F	4392804	ADJUSTER	1		0ACH-000001			
1G	4392805	STOPPER	1		0ACH-000001			
1H	4392806	SUSPENSION	1		0ACH-000001			
1I	4392807	SLIDER	1		0ACH-000001			
1J	4392809	COVER	1		0ACH-000001			
1K	4456377	REST;ARM (L)	1		0ACH-000001			
1L	4456376	REST;ARM (R)	1		0ACH-000001			
1M	4392812	BUSHING	1		0ACH-000001			
1N	4392813	LINK	1		0ACH-000001			
1O	4456375	REST;HEAD	1		0ACH-000001			
1P	4392808	HANDLE	1		0ACH-000001	T		
1P	4610640	HANDLE	1		0ACH-000001			
1Q	4392808	HANDLE	1		0ACH-000001	T		
1Q	4610641	HANDLE	1		0ACH-000001			
1R	4629852	SUPPORT;INNER	1	#	0ACH-000001			
2	M340816	BOLT;SOCKET	4		0ACH-000001			

FLOOR PARTS

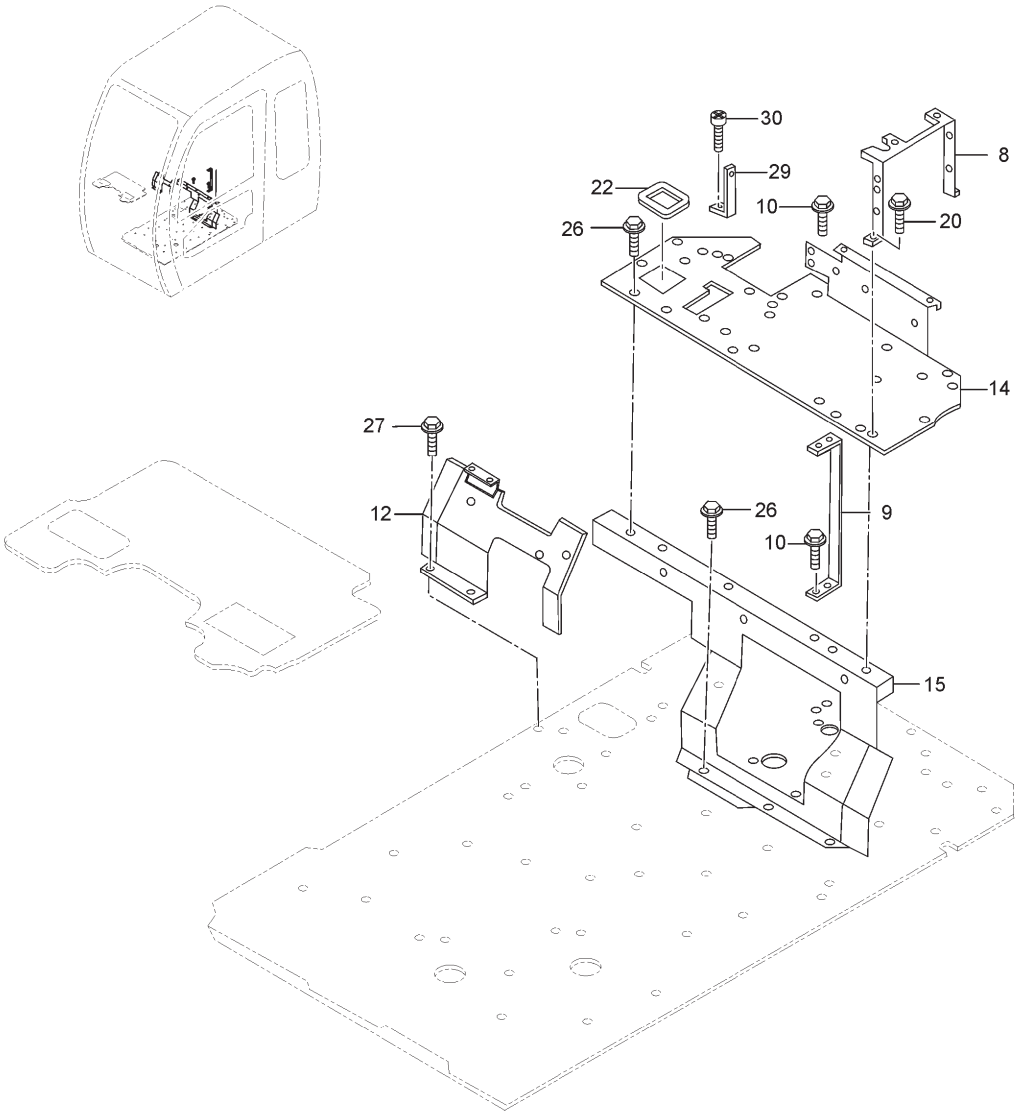

ITEM	PART NO.	PART NAME	QTY	S.C.	MACHINE SERIAL NO. ONWARDS	ICA	REPLACEABLE PART	
							PART NO.	QTY
--	**9183979**	**FLOOR PARTS**	**--**					
8	7039389	BRACKET	1		0ACH-000001			
9	8076619	SUPPORT	1		0ACH-000001			
10	J271025	BOLT; SEMS	2	D	0ACH-000001	T		
12	6019838	BRACKET	1		0ACH-000001			
14	6019252	BRACKET	1		0ACH-000001			
15	5007342	BRACKET	1		0ACH-000001			
20	J260820	BOLT; SEMS	2	D	0ACH-000001	T		
22	4445220	BUSHING; RUBBER	1		0ACH-000001			
26	J271025	BOLT; SEMS	5	D	0ACH-000001	T		
27	J271025	BOLT; SEMS	2	D	0ACH-000001	T		
29	9757192	BRACKET	1		0ACH-000001			
30	J460616	SCREW;SEMS	2		0ACH-000001			

FLOOR PLATE

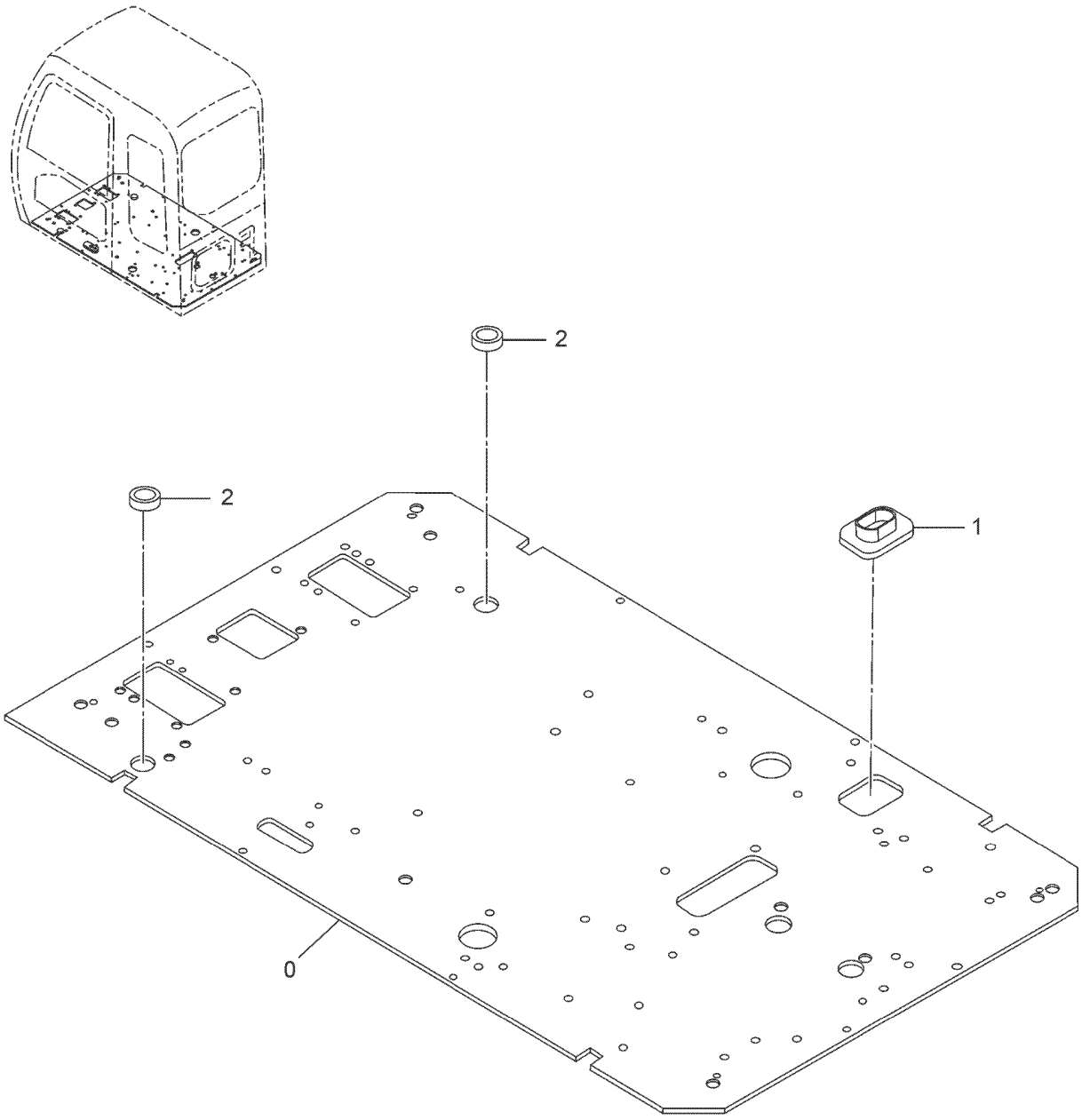

ITEM	PART NO.	PART NAME	QTY	S.C.	MACHINE SERIAL NO. ONWARDS	ICA	REPLACEABLE PART	
							PART NO.	QTY
--	**TE07232**	**FLOOR PLATE**	**--**					
0	6020352	PLATE	1		0ACH-000001			
1	4351011	BUSHING;RUBBER	1		0ACH-000001			
2	4288445	BUSHING;	2		0ACH-000001			

CONTROL LEVER (TRAVEL)

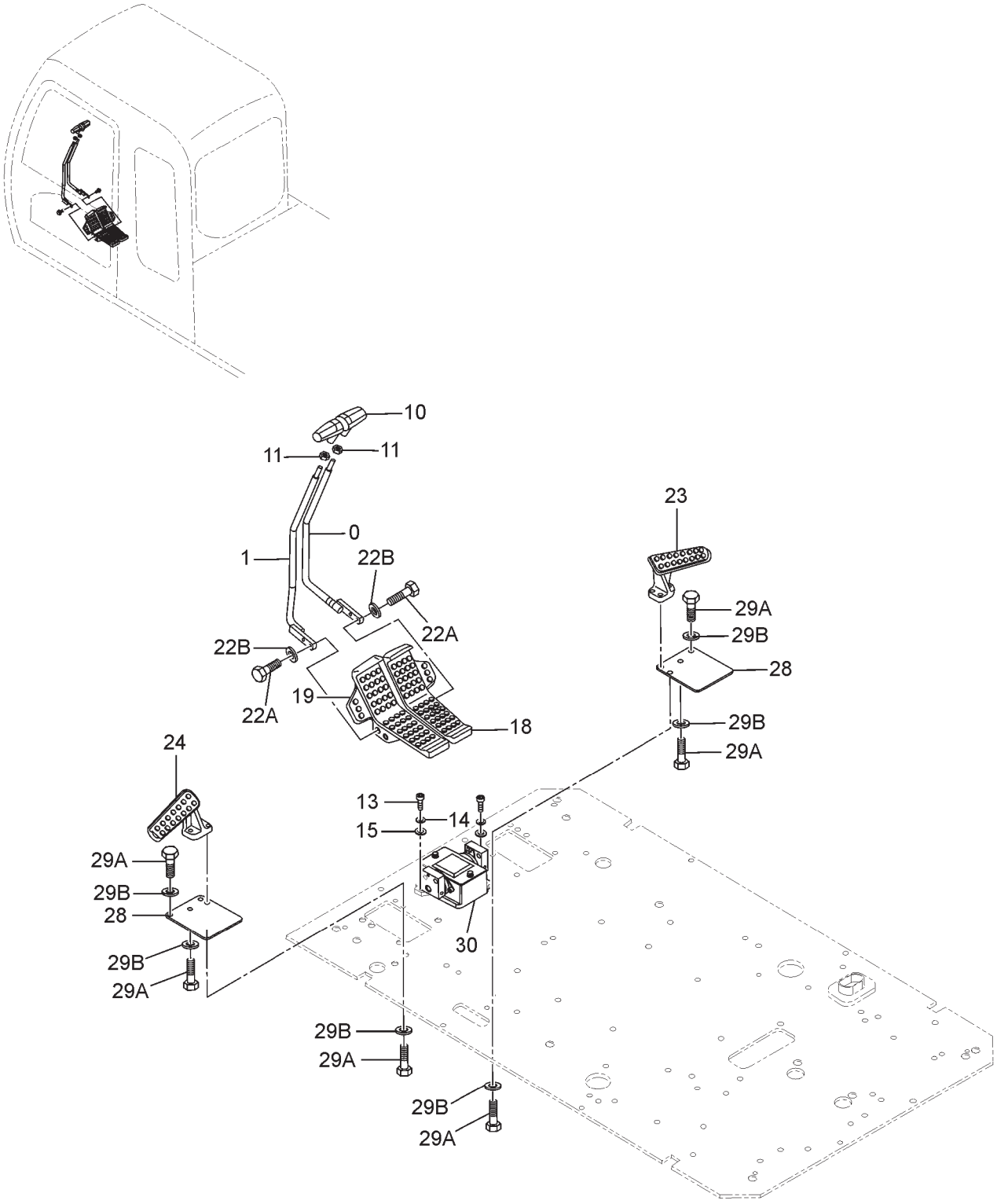

CONTROL LEVER (TRAVEL)

ITEM	PART NO.	PART NAME	QTY	S.C.	MACHINE SERIAL NO. ONWARDS	ICA	REPLACEABLE PART	
							PART NO.	QTY
--	**TD03970**	**CONTROL LEVER (TRAVEL)**	**--**					
0	8062667	LEVER	1		0ACH-000001			
1	8062623	LEVER	1		0ACH-000001			
10	4204810	GRIP	2		0ACH-000001			
11	4201107	NUT	2		0ACH-000001			
13	J781035	BOLT;SOCKET;	2		0ACH-000001			
14	A590910	SPR.WASHER	2		0ACH-000001			
15	A590110	WASHER;PLANE	2		0ACH-000001			
18	1024384	PEDAL	1		0ACH-000001			
19	1024224	PEDAL	1		0ACH-000001			
22	J271050	BOLT; SEMS	4		0ACH-000001			
22A	J901050	BOLT	1		0ACH-000001			
22B	A590110	WASHER;PLANE	1		0ACH-000001			
23	1015478	REST;FOOT	1		0ACH-000001			
24	1015477	REST;FOOT	1		0ACH-000001			
28	3052543	COVER;PL	2		0ACH-000001			
29	J271035	BOLT; SEMS	8	D	0ACH-000001	T		
29B	A590110	WASHER;PLANE	1		0ACH-000001			
30	9235551	VALVE; PILOT	1		0ACH-000001			

VALVE; PILOT (TRAVEL)

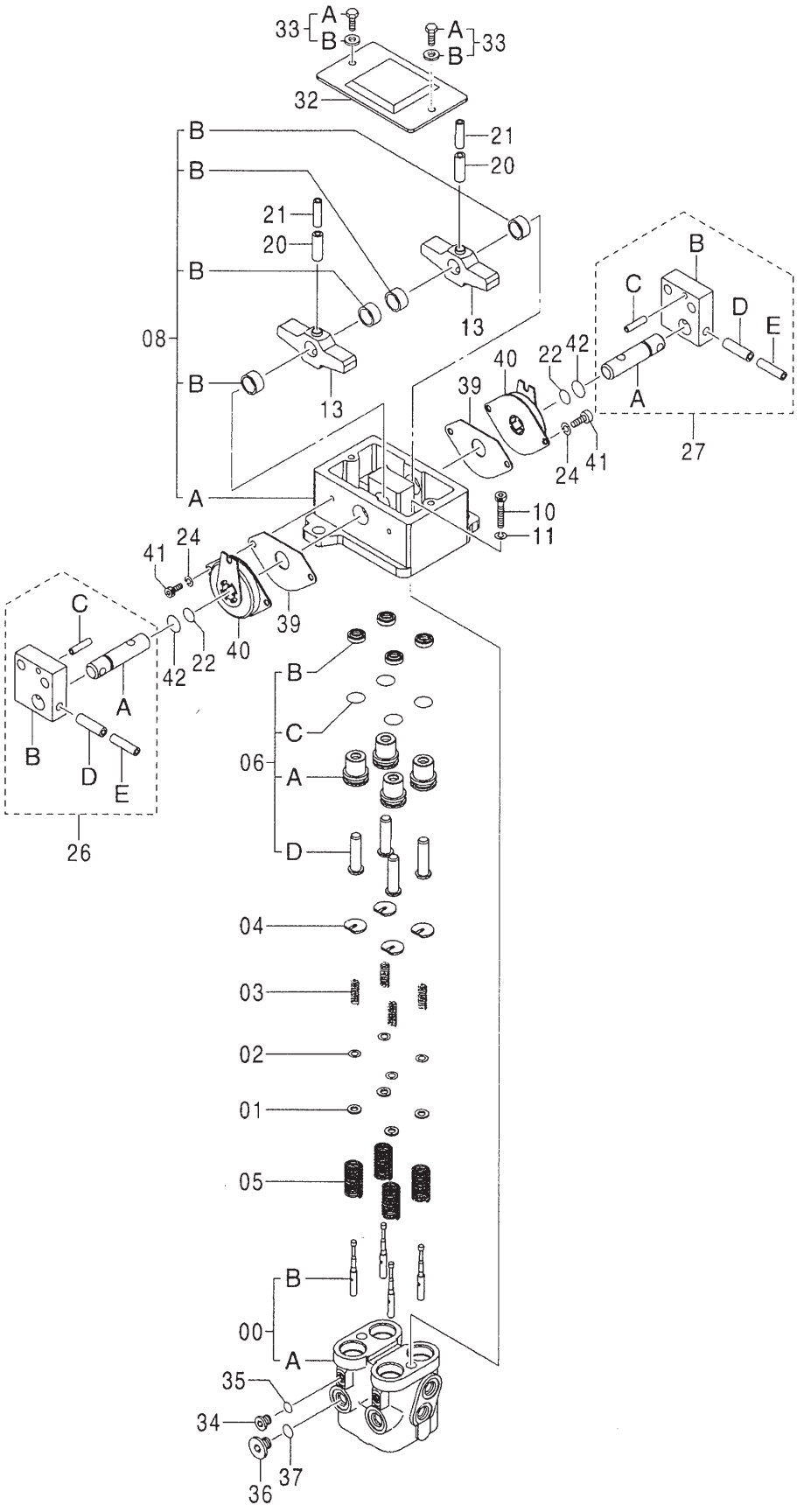

VALVE; PILOT (TRAVEL)

ITEM	PART NO.	PART NAME	QTY	S.C.	MACHINE SERIAL NO. ONWARDS	ICA	REPLACEABLE PART	
							PART NO.	QTY
--	**9235551**	**VALVE; PILOT**	**1**	**S**				
00	8092248	* CASING ASS'Y	1					
00A	+++++++	** CASING	1	D				
00B	+++++++	** SPOOL	4	D				
01	4319299	* SPACER	4					
02	4203411	* SHIM 0.1MM	4	R				
03	4368629	* SPRING;COMPRES.	4					
04	4364970	* GUIDE;SPRING	4					
05	4368630	* SPRING;COMPRES.	4					
06	9226367	* PUSHER;ASSY	4					
06A	3099628	** BUSHING	1					
06B	4447050	** SEAL;OIL	1					
06C	4201993	** O-RING	1					
06D	4602154	** PUSHER	1					
08	9184275	* HOLDER	1					
08A	2044332	** HOLDER	1					
08B	4437433	** BUSHING	4					
10	J781030	* BOLT;SOCKET	2					
11	A590910	* WASHER;SPRING	2					
13	3098245	* CAM	2					
20	4027427	* PIN;SPRING	2					
21	4213419	* PIN;SPRING	2					
22	4185600	* O-RING	2					
24	A590906	* WASHER;SPRING	4					
26	9207567	* PIN ASS'Y	1					
26A	4425305	** PIN	1					
26B	3087987	** BRACKET	1					
26C	4051262	** PIN;SPRING	1					
26D	4205318	** PIN;SPRING	1					
26E	4205317	** PIN;SPRING	1					
27	9207568	* PIN ASS'Y	1					
27A	4425305	** PIN	1					
27B	3087987	** BRACKET	1					
27C	4051262	** PIN;SPRING	1					
27D	4205318	** PIN;SPRING	1					
27E	4205317	** PIN;SPRING	1					
32	8077903	* COVER	1					
33	J260614	* BOLT;SEMS	2	D				
33A	J900614	** BOLT	1					
33B	A590106	** WASHER;PLANE	1					
34	4217651	* PLUG	2					
35	4113154	* O-RING	2					
36	4208977	* PLUG	2					
37	964255	* O-RING	2					
39	4437432	* SEAT;RUBBER	2					
40	4428902	* DAMPER	2					
41	J780612	* BOLT;SOCKET	4					
42	4447067	* O-RING	2					

CONTROL LEVER ASSY. (FRONT & SWING)

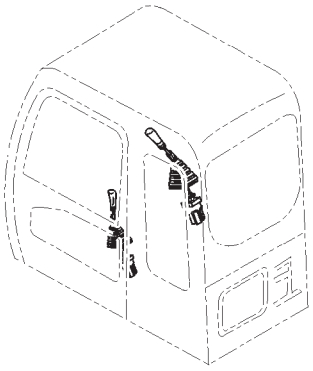

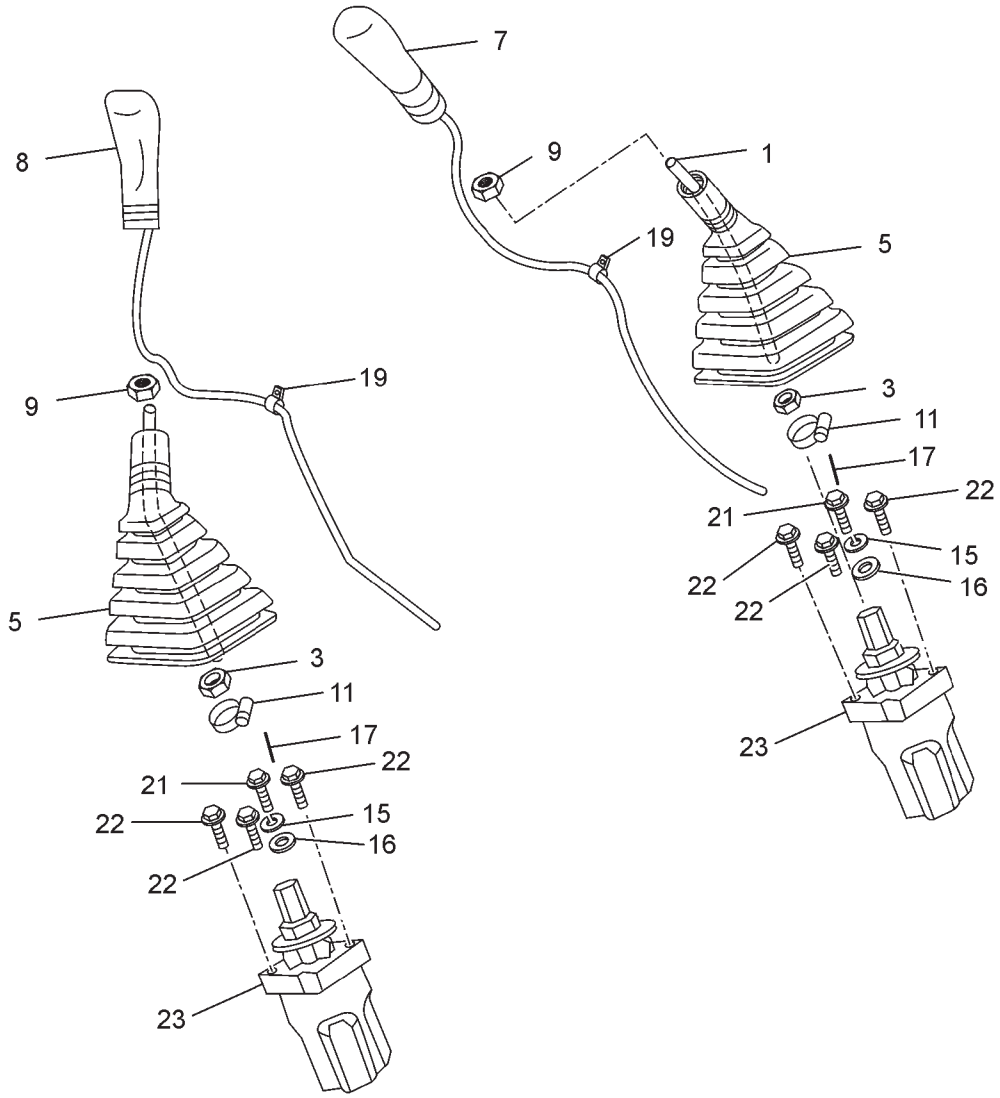

CONTROL LEVER ASSY (FRONT & SWING)

ITEM	PART NO.	PART NAME	QTY	S.C.	MACHINE SERIAL NO. ONWARDS	ICA	REPLACEABLE PART	
							PART NO.	QTY
--	**TB01052**	**CONTROL LEVER ASSY. (FRONT & SWING)**	**--**					
1	4445322	LEVER	2		0ACH-000001			
3	J950014	NUT	2		0ACH-000001			
4	TD05702	BOOT	2		0ACH-000001			
5	2045470	BOOT	2		0ACH-000001			
7	TB01080	GRIP	1		0ACH-000001			
8	TB01079	GRIP (L)	1		0ACH-000001			
9	J952012	NUT	2		0ACH-000001			
11	4055311	CLIP;BAND	2		0ACH-000001			
15	A590908	WASHER;SPRG	2		0ACH-000001			
16	A590108	WASHER;PLANE	2		0ACH-000001			
17	4144011	PIN;SPRING	2		0ACH-000001			
19	4300351	CLIP;BAND	2		0ACH-000001			
21	4609956	BOLT	2		0ACH-000001			
22	J260820	BOLT; SEMS	6		0ACH-000001			
22A	J900820	BOLT	1		0ACH-000001			
22B	A590108	WASHER;PLANE	1		0ACH-000001			
23	9239583	VALVE; PILOT	2		0ACH-000001			
24	A590112	WASHER PLANE	2		0ACH-000001			

VALVE; PILOT (FRONT, SWING)

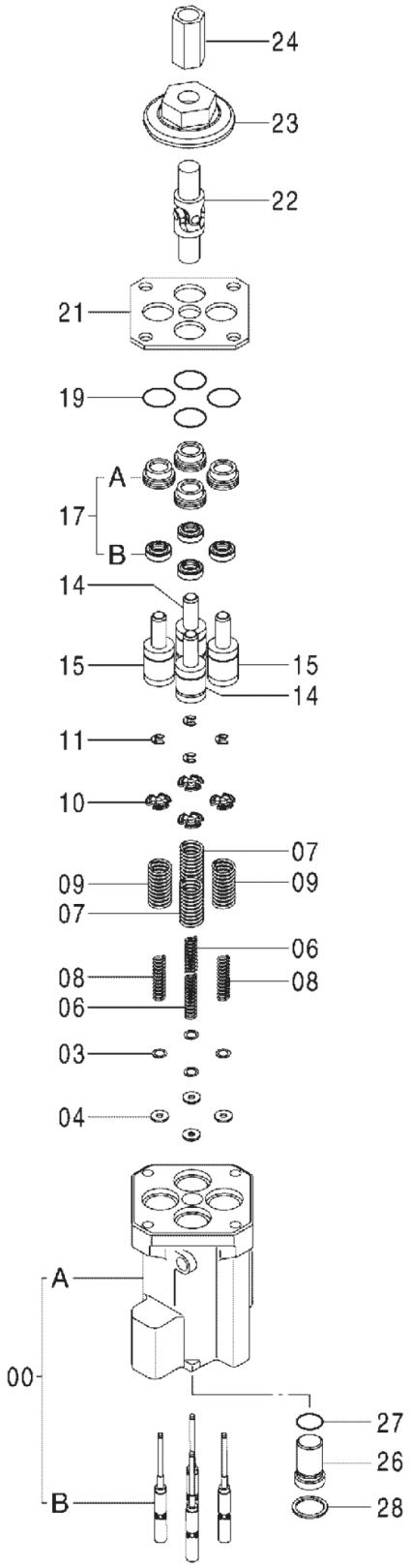

VALVE; PILOT (FRONT, SWING)

ITEM	PART NO.	PART NAME	QTY	S.C.	MACHINE SERIAL NO. ONWARDS	ICA	REPLACEABLE PART	
							PART NO.	QTY
--	**9239583**	**VALVE;PILOT**	**1**	**S**				
00	8094446	* CASING ASS'Y	1					
00A	+++++++	** CASING D	1					
00B	+++++++	** SPOOL D	4					
03	4203411	* SHIM R	4					
04	4410898	* SPACER	4					
06	4429120	* SPRING;COMPRES.	2					
07	4446960	* SPRING;COMPRES.	2					
08	4425414	* SPRING;COMPRES.	2					
09	4421771	* SPRING;COMPRES.	2					
10	4615610	* GUIDE;SPRING	4					
11	4437333	* RING;RETAINING	4					
14	9759157	* PUSHER	2					
15	9759158	* PUSHER	2					
17	9246436	* SLEEVE ASS'Y	4					
17A	+++++++	** SLEEVE	1	D				
17B	+++++++	** SEAL;OIL	1	D				
19	4201993	* O-RING	4					
21	4614296	* PLATE	1					
22	4335060	* JOINT;UNIVERSAL	1					
23	4437106	* CAM	1					
24	4182067	* JOINT;SCREW	1					
26	4614286	* PLUG	1					
27	4170585	* O-RING	1					
28	4614331	* RING;RETAINING	1					

LOCK LEVER ASSY.

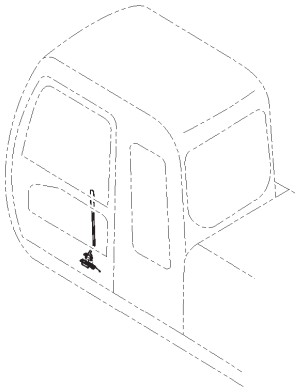

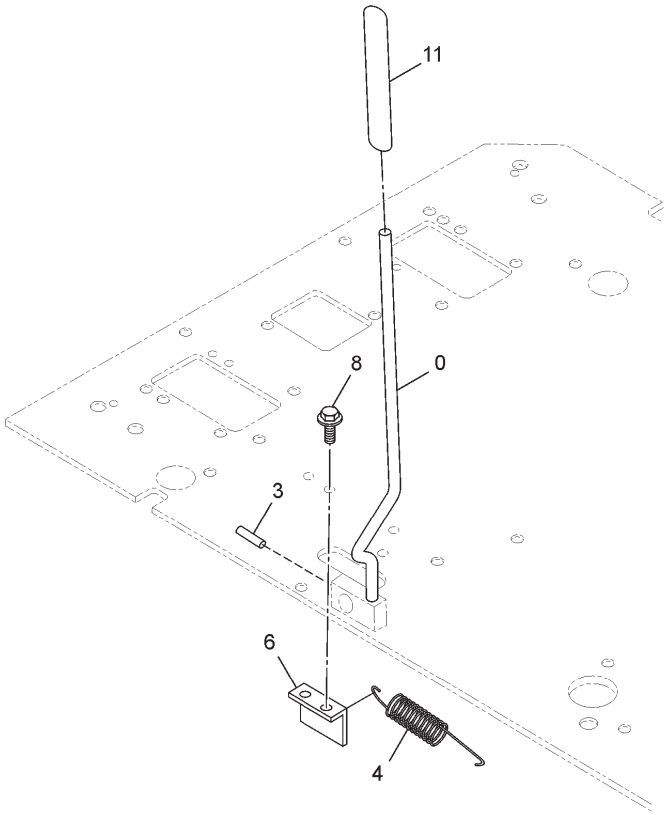

ITEM	PART NO.	PART NAME	QTY	S.C.	MACHINE SERIAL NO. ONWARDS	ICA	REPLACEABLE PART	
							PART NO.	QTY
--	**9230182**	**LOCK LEVER ASSY.**	**--**					
0	7035503	LEVER; LOCK	1		0ACH-000001			
3	4116310	PIN; SPRING	1		0ACH-000001			
4	4189184	SPRING;TENSION;	1		0ACH-000001			
6	8073901	BRACKET	1		0ACH-000001			
8	J271030	BOLT; SEMS	2		0ACH-000001			
11	3089848	GRIP; LOCK	1		0ACH-000001			

CONSOL

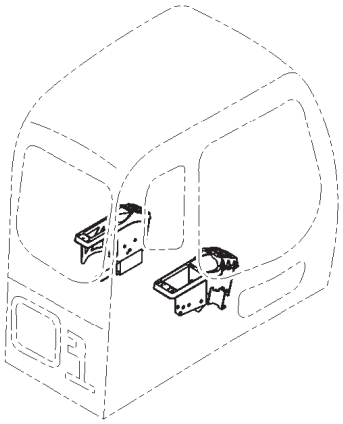

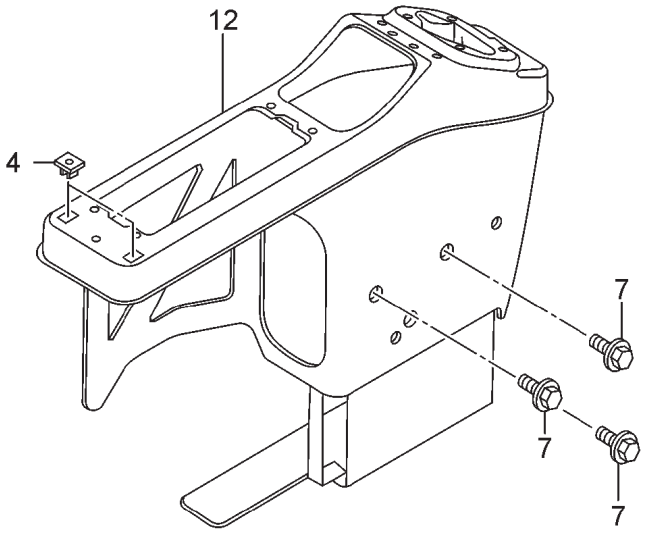

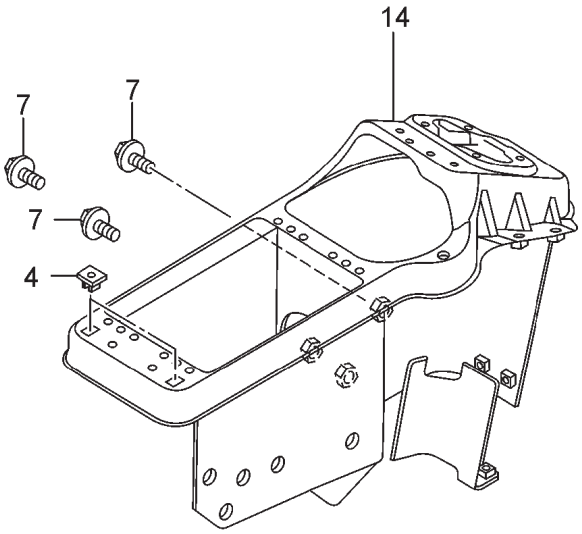

ITEM	PART NO.	PART NAME	QTY	S.C.	MACHINE SERIAL NO. ONWARDS	ICA	REPLACEABLE PART	
							PART NO.	QTY
--	**9183971**	**CONSOL**	**--**					
4	4351255	CLIP	4		0ACH-000001			
7	J051025	BOLT;SEMS	6		0ACH-000001			
12	7036594	CONSOLE (L)	1		0ACH-000001			
14	7036595	CONSOLE (R)	1		0ACH-000001			

CONSOL COVER (1)

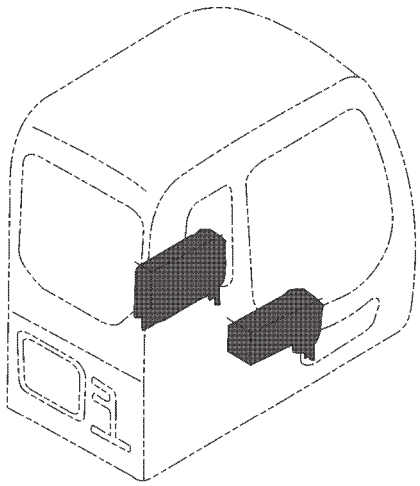

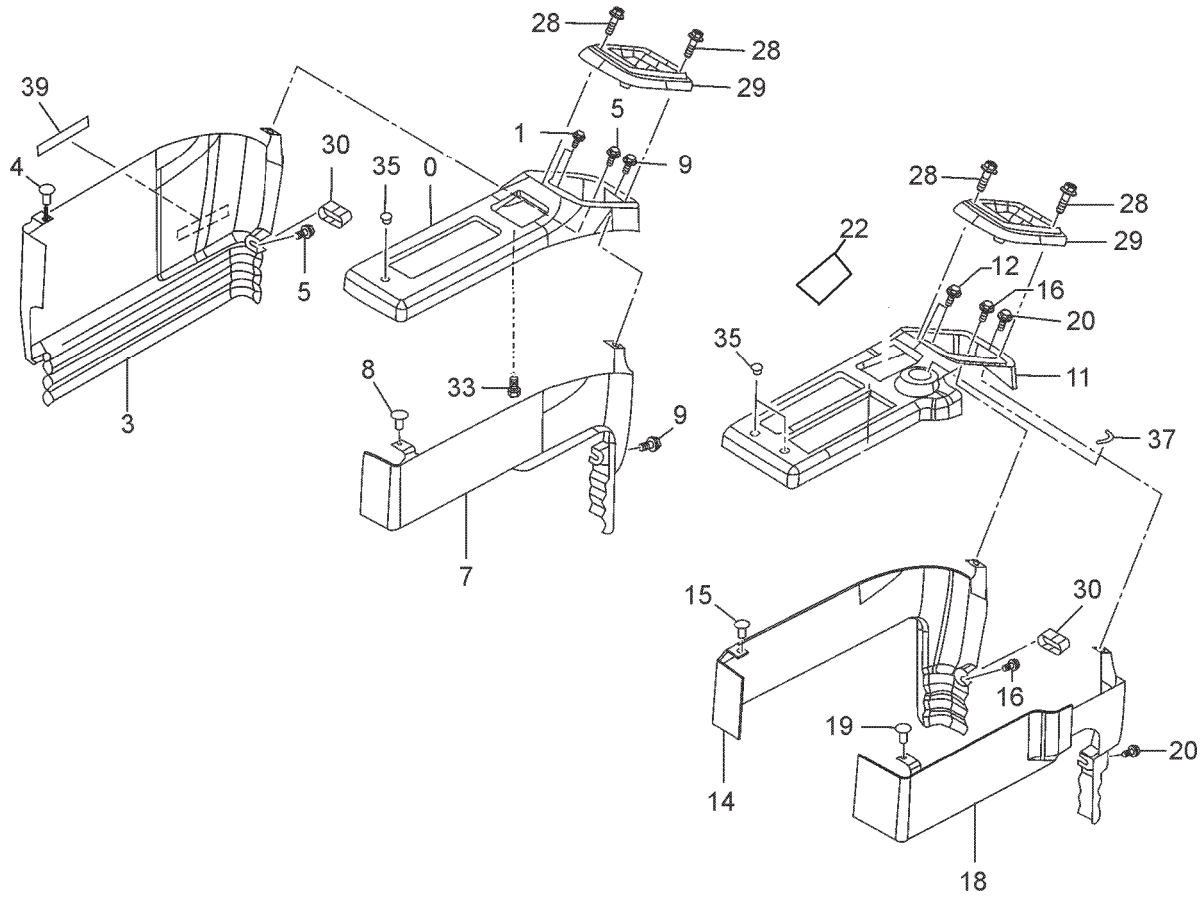

CONSOL COVER (1)

ITEM	PART NO.	PART NAME	QTY	S.C.	MACHINE SERIAL NO. ONWARDS	ICA	REPLACEABLE PART	
							PART NO.	QTY
--	**9183972**	**CONSOLE COVER (1)**	**--**					
0	4420875	COVER	1		0ACH-000001			
1	J680616	SCREW;SEMS	3		0ACH-000001			
3	4420876	COVER	1		0ACH-000001			
4	4361802	SCREW;TAPPING	1		0ACH-000001			
5	J680616	SCREW;SEMS	5	#	0ACH-000001			
7	4420877	COVER	1		0ACH-000001			
8	4361802	SCREW;TAPPING	1		0ACH-000001			
9	J680616	SCREW;SEMS	2		0ACH-000001			
11	4420878	COVER	1		0ACH-000001			
12	J680616	SCREW;SEMS	4		0ACH-000001			
14	4420879	COVER	1		0ACH-000001			
15	4361802	SCREW;TAPPING	1		0ACH-000001			
16	J680616	SCREW;SEMS	2		0ACH-000001			
18	4420880	COVER	1		0ACH-000001			
19	4361802	SCREW;TAPPING	1		0ACH-000001			
20	J680616	SCREW;SEMS	2		0ACH-000001			
22	TE10196	GROMMET	1		0ACH-000001			
28	J460635	SCREW;SEMS	8		0ACH-000001			
29	2045509	COVER	2		0ACH-000001			
30	4441117	CAP;RUBBER	2		0ACH-000001			
33	4361800	SCREW;TAPPING	8		0ACH-000001			
35	4448990	CAP	3		0ACH-000001			
37	4264805	NAME-PLATE	1		0ACH-000001			
39	4299059	NAME-PLATE	1		0ACH-000001			
40	TE10084	COVER PANEL	1		0ACH-000001			

RIGHT – COVER ASSY.

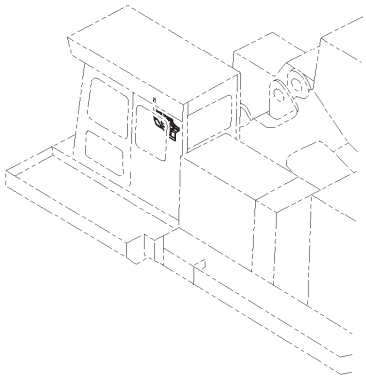

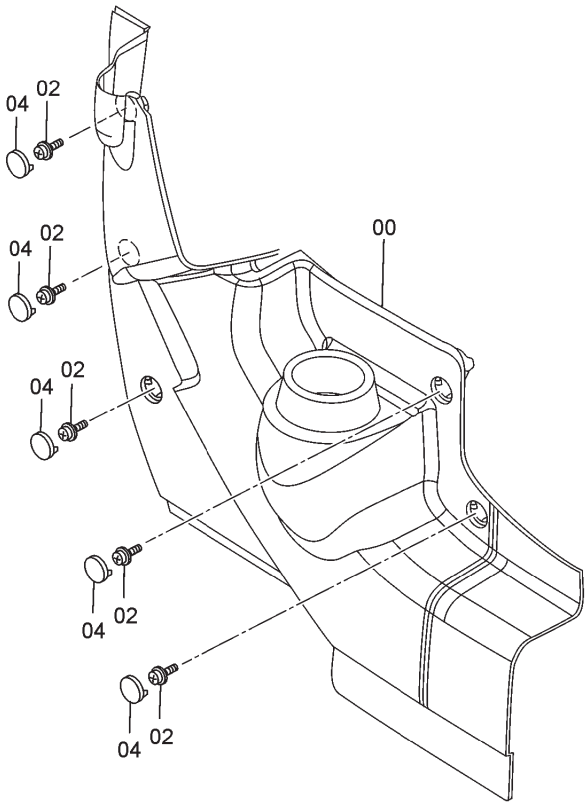

ITEM	PART NO.	PART NAME	QTY	S.C.	MACHINE SERIAL NO. ONWARDS	ICA	REPLACEABLE PART	
							PART NO.	QTY
--	**9184105**	**RIGHT COVER ASSY.**	**--**					
00	4426352	COVER	1		0ACH-000001			
02	J460616	SCREW;SEMS	5		0ACH-000001			
04	4426354	CAP	5		0ACH-000001			

CAB TOP LIGHT ASSY.

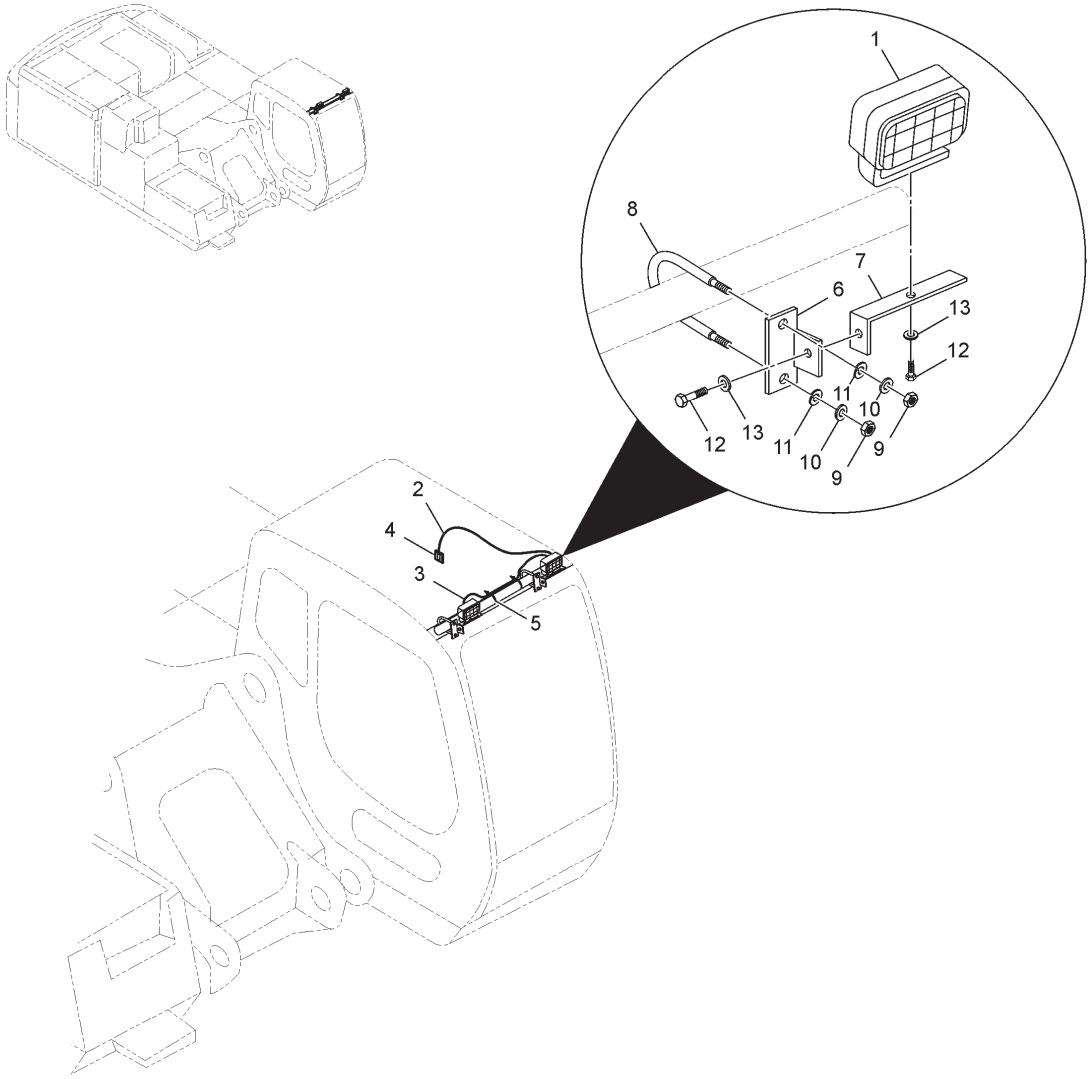

ITEM	PART NO.	PART NAME	QTY	S.C.	MACHINE SERIAL NO. ONWARDS	ICA	REPLACEABLE PART	
							PART NO.	QTY
--	**TE07678**	**CAB TOP LIGHT ASSY.**	**--**					
1	TD10020	WORK LAMP 24V	2		0ACH-000001			
2	TE04648	WIRE HARNESS (PANEL):ADDITIONAL CAB LIGHT	1		0ACH-000001			
3	TE04647	WIRE HARNESS;CAB TOP LIGHT	1		0ACH-000001			
4	TE00237	LIGHT SWITCH	1		0ACH-000001			
5	62196058503	CABLE TIES	8		0ACH-000001			
6	9756005	BRACKET	2		0ACH-000001			
7	4447765	BRACKET	2		0ACH-000001			
8	4447868	BOLT;U	2		0ACH-000001			
9	M521008	NUT	4		0ACH-000001			
10	A590110	WASHER;PLANE	4		0ACH-000001			
11	A590910	SPR.WASHER	4		0ACH-000001			
12	J271030	BOLT;SEMS	2		0ACH-000001			
13	A590114	WASHER;PLANE	2		0ACH-000001			
14	4289709	SUPPORT	7		0ACH-000001			

CONTROL UNIT

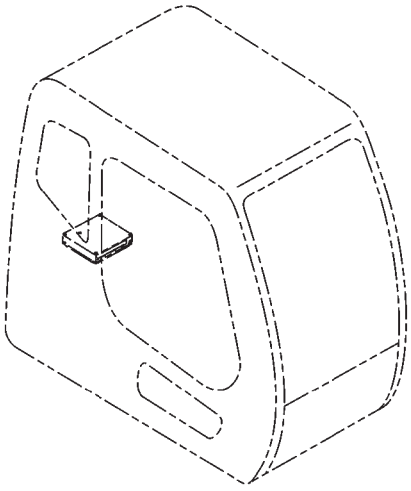

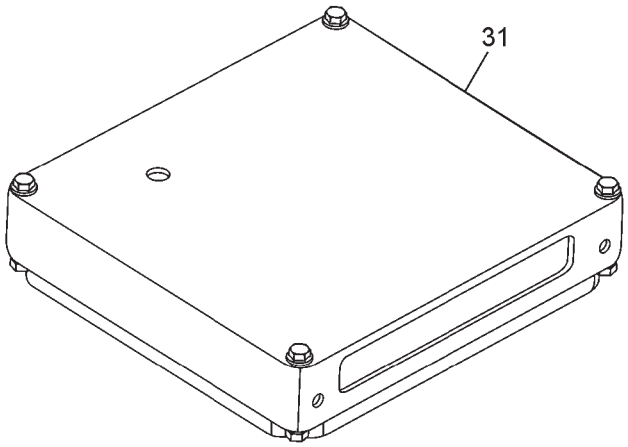

ITEM	PART NO.	PART NAME	QTY	S.C.	MACHINE SERIAL NO. ONWARDS	ICA	REPLACEABLE PART	
							PART NO.	QTY
31	9239568	UNIT;ICX	1		0ACH-000001			

RADIO (AM/FM)

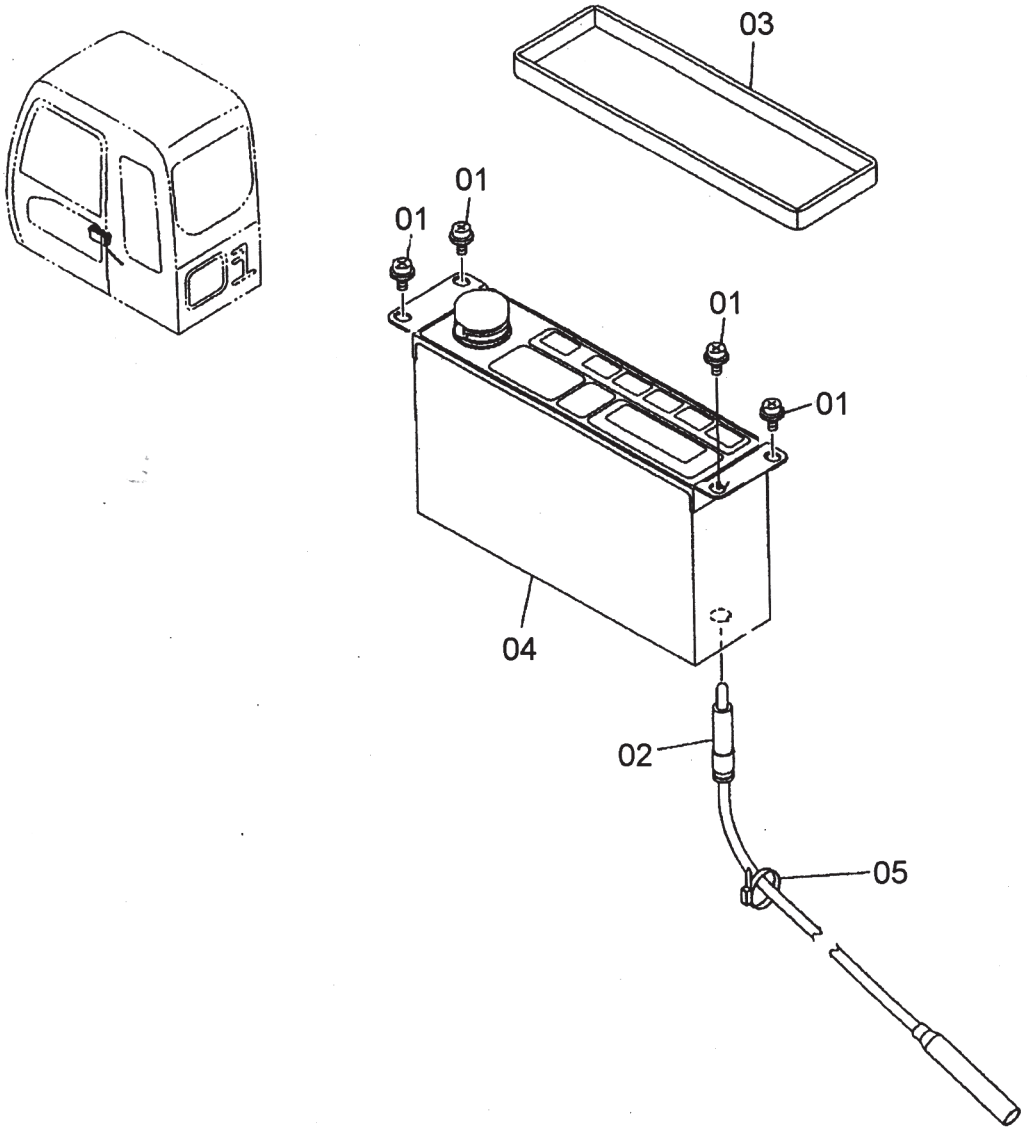

ITEM	PART NO.	PART NAME	QTY	S.C.	MACHINE SERIAL NO. ONWARDS	ICA	REPLACEABLE PART	
							PART NO.	QTY
--	**TE09240**	**RADIO (AM/FM)**	**--**		**0ACE-000014**			
1	J460510	SCREW;SEMS M5X10	4		0ACE-000014			
3	4368973	RUBBER	1		0ACE-000014			
4	TD08378	FM RADIO	1		0ACE-000014			
5	4055311	CLIP;BAND 140	1		0ACE-000014			

REAR BOX

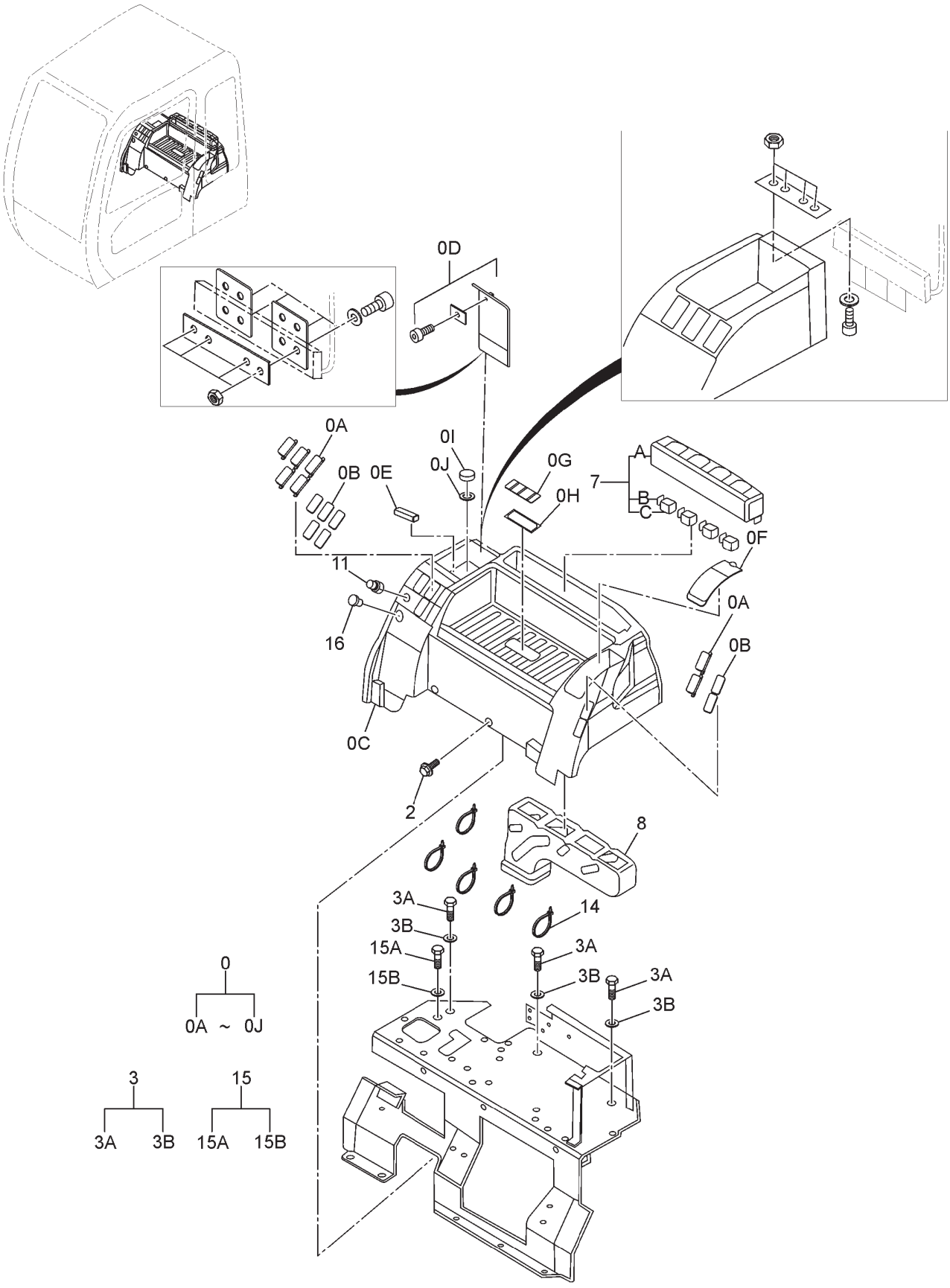
0D
0A
0B
0E
0I
0J
0G
0H
7
A
B
C
0F
11
16
0C
2
8
3A
3B
15A
15B
14
0
0A ~ 0J
3
3A
3B
15
15A
15B

REAR BOX

ITEM	PART NO.	PART NAME	QTY	S.C.	MACHINE SERIAL NO. ONWARDS	ICA	REPLACEABLE PART	
							PART NO.	QTY
--	**TB01097**	**REAR BOX**	**--**					
0	4433793	TRAY	1		0ACH-000001			
0A	4456725	COVER	7		0ACH-000001			
0B	4456723	SEAL RUBBER	7		0ACH-000001			
0C	4458227	TRAY	1		0ACH-000001			
0D	4458228	COVER	1		0ACH-000001			
0E	4458229	MAGNET	1		0ACH-000001			
0F	4458230	COVER	1		0ACH-000001			
0G	4458231	COVER	1		0ACH-000001			
0H	4458232	SEAL	1		0ACH-000001			
0I	4458233	COVER	1		0ACH-000001			
0J	4458234	SEAL	1		0ACH-000001			
2	J271025	BOLT; SEMS	2		0ACH-000001			
3	J260820	BOLT; SEMS	3		0ACH-000001			
3A	J900820	BOLT	1		0ACH-000001			
3B	A590108	WASHER;PLANE	1		0ACH-000001			
7	4433794	COVER	1		0ACH-000001			
7A	4458235	COVER	1		0ACH-000001			
7B	4458236	LOWER	4		0ACH-000001			
7C	4458237	BRACKET	4		0ACH-000001			
8	4426156	DUCT	1		0ACH-000001			
11	4357862	LIGHTER	1		0ACH-000001			
14	4055312	CLIP;BAND 250	5		0ACH-000001			
15	J271020	BOLT; SEMS	1		0ACH-000001			
15A	J901020	BOLT	1		0ACH-000001			
15B	A590110	WASHER;PLANE	1		0ACH-000001			
16	4447072	BUSHING;RUBBER	1		0ACH-000001			

ELECTRICAL PARTS (A)

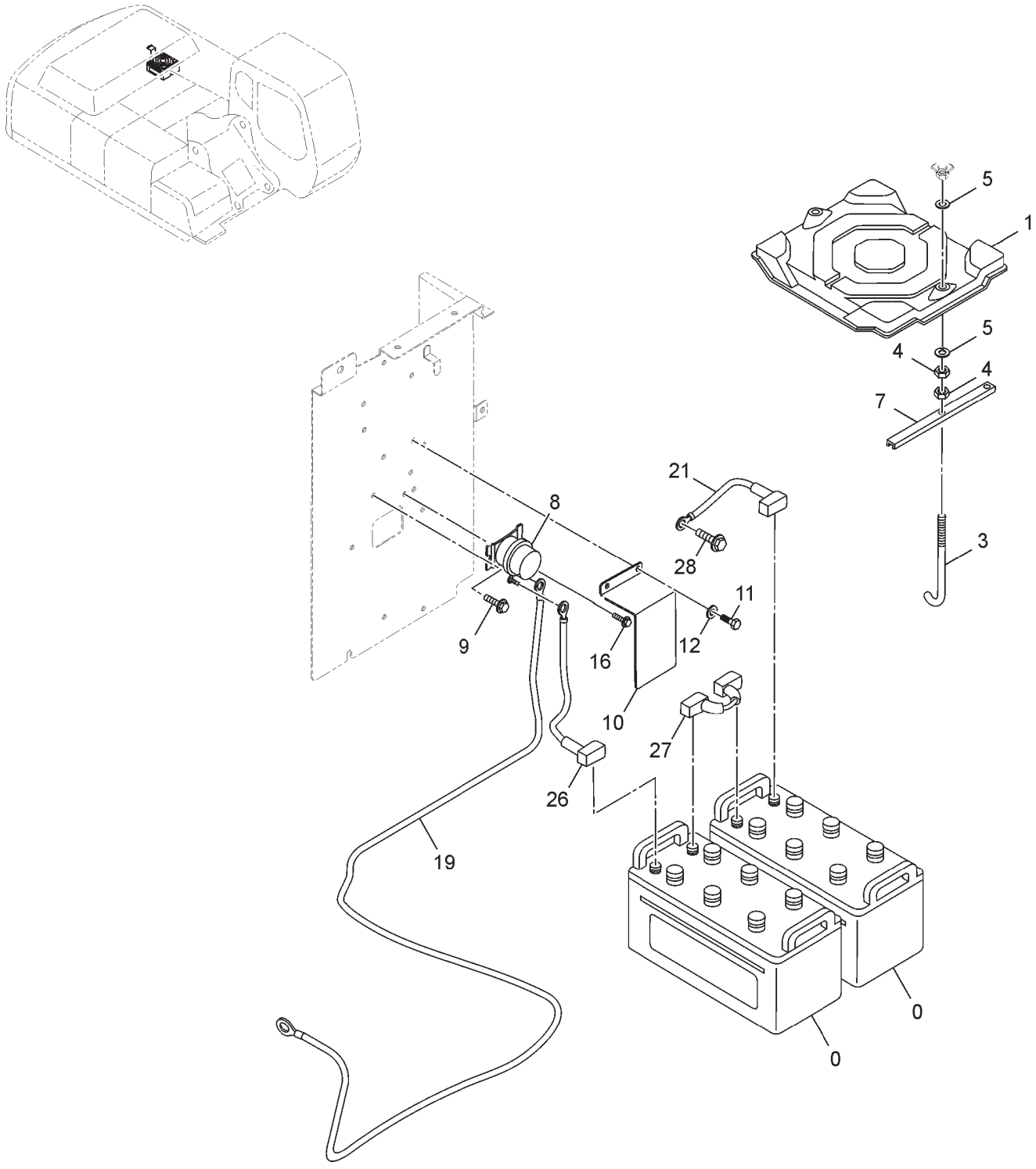

ELECTRICAL PARTS (A)

ITEM	PART NO.	PART NAME	QTY	S.C.	MACHINE SERIAL NO. ONWARDS	ICA	REPLACEABLE PART	
							PART NO.	QTY
--	**9191471**	**ELECTRICAL PARTS (A)**	**--**					
0	261854109908	BATTERY	2		0ACH-000001			
1	TD02228	BATTERY COVER	1		0ACH-000001			
3	4257034	BOLT;HOOK	2		0ACH-000001			
4	J950010	NUT	4		0ACH-000001			
5	A590910	SPR.WASHER	2		0ACH-000001			
7	4203223	SUPPORT;BATT	2		0ACH-000001			
8	4255762	RELAY; BATTERY	1	Z	0ACH-000001			
9	J020830	BOLT;SEMS	2		0ACH-000001			
10	3087816	COVER	1		0ACH-000001			
11	J900816	BOLT	3		0ACH-000001			
12	A590108	WASHER;PLANE	3		0ACH-000001			
16	J260620	BOLT;SEMS	2	D	0ACH-000001	T		
19	4457896	BATTERY CABLE	1		0ACH-000001			
		(STARTER TO BATTERY RELAY)						
21	TE06805	HARNESS; WIRE	1		0ACH-000001			
		(BATTERY NEGATIVE TO GROUND)						
26	4390098	BATTERY CABLE	1		0ACH-000001			
		(RELAY TO POSITIVE)						
27	TE06804	HARNESS; WIRE	1		0ACH-000001			
		(BATTERY + VE TO BATTERY -VE)						
28	J271025	BOLT; SEMS	1	D	0ACH-000001	T		

ELECTRICAL PARTS (B)

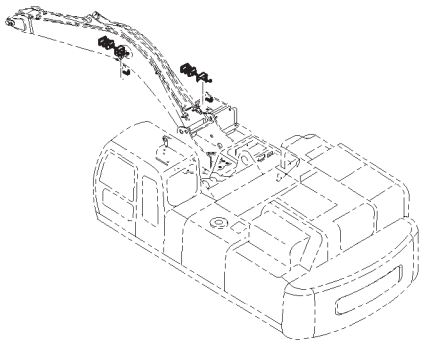

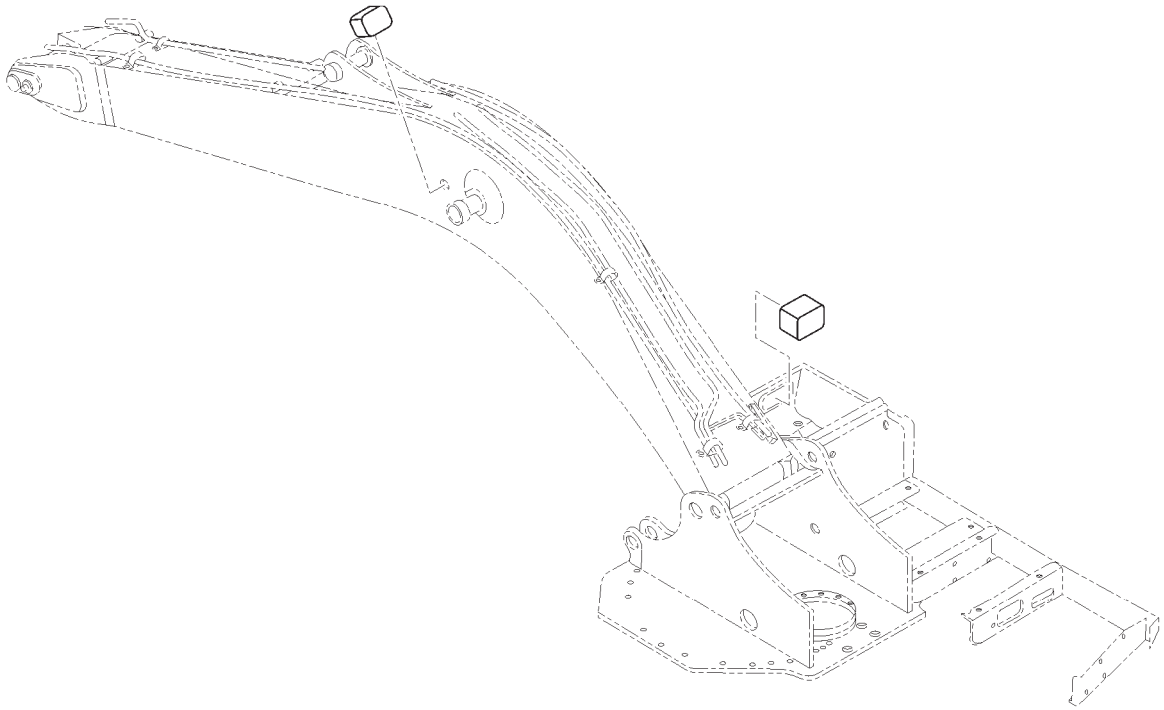

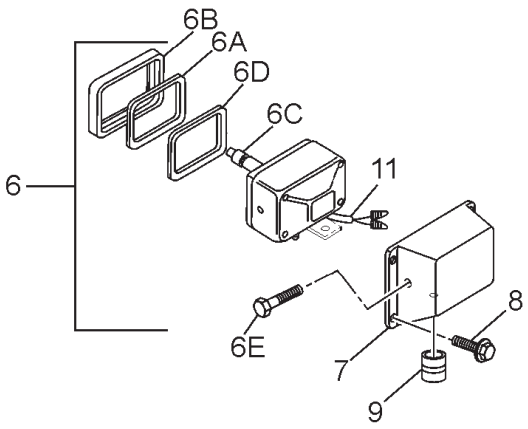

ELECTRICAL PARTS (B)

ITEM	PART NO.	PART NAME	QTY	S.C.	MACHINE SERIAL NO. ONWARDS	ICA	REPLACEABLE PART	
							PART NO.	QTY
--	**TC01668**	**ELECTRIC PARTS (B)**	**--**					
3	A590110	WASHER;PLANE	2		0ACH-000001			
4	TE03441	WIRE HARNESS (BOOM LIGHT)	1		0ACH-000001			
6	TD10020	WORK LAMP 24V	3		0ACH-000223			
7	TC02001	BRACKET	1		0ACH-000223			
8	J271020	BOLT;SEMS	4	D	0ACH-000001	T		
9	94-2807	BUSHING;RUBBER	1		0ACH-000001			
11	TE08865	WIRE HARNESS;TOOL BOX LAMP	1		0ACH-000251			

ELECTRICAL PARTS (C)

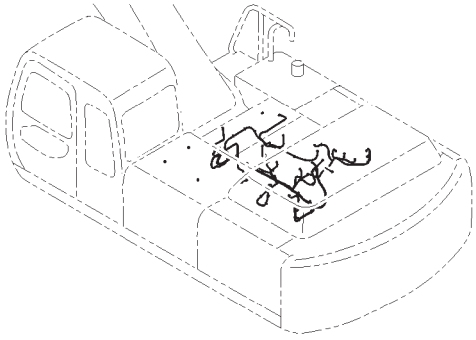

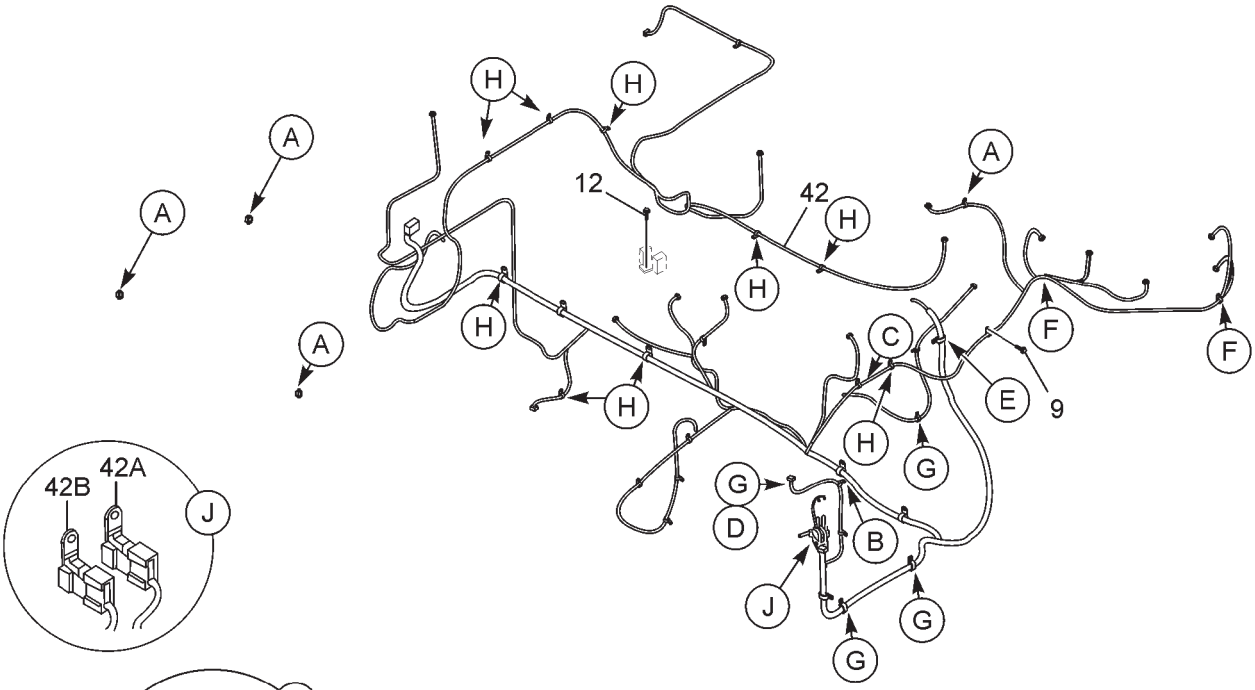

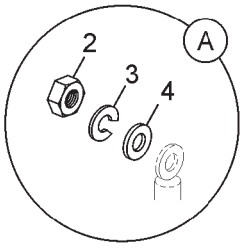

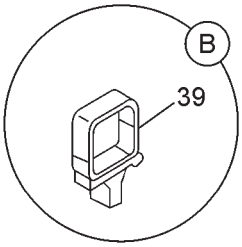

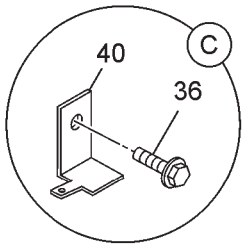

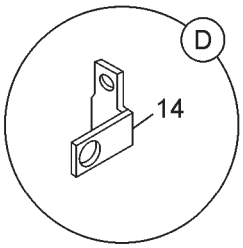

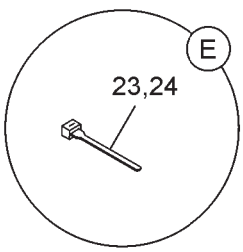

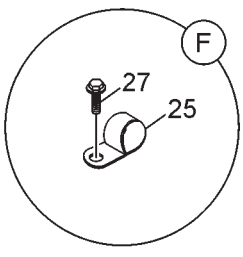

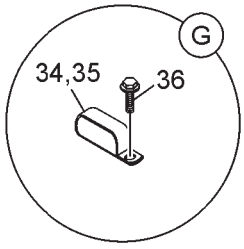

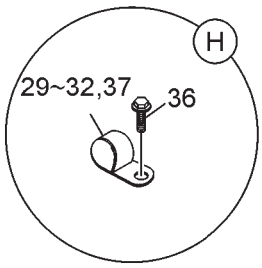

ELECTRICAL PARTS (C)

ITEM	PART NO.	PART NAME	QTY	S.C.	MACHINE SERIAL NO. ONWARDS	ICA	REPLACEABLE PART	
							PART NO.	QTY
--	**9191472**	**ELECTRIC PARTS (C)**	**--**					
2	J950010	NUT	4		0ACH-000001			
3	A590910	SPR.WASHER	4		0ACH-000001			
4	A590110	WASHER;PLANE	4		0ACH-000001			
6	M430416	SCREW	2		0ACH-000001			
7	A590904	SPRING; WASHER	2		0ACH-000001			
9	J271025	BOLT;SEMS	1	D	0ACH-000001	T		
12	J260816	BOLT;SEMS	2		0ACH-000001			
14	4257159	BRACKET	1		0ACH-000001			
23	4055311	CLIP;BAND 140	16		0ACH-000001			
24	4055312	CLIP;BAND 250	1		0ACH-000001			
25	4000859	CLIP PIPE	2		0ACH-000001			
27	J260616	BOLT;SEMS	2		0ACH-000001			
29	4190261	CLIP	5		0ACH-000001			
30	4190275	CLIP	2		0ACH-000001			
31	4190273	CLIP	5		0ACH-000001			
32	4190274	CLIP	6		0ACH-000001			
34	4190282	CLIP	2		0ACH-000001			
35	4190266	CLIP	5		0ACH-000001			
36	J271020	BOLT;SEMS	30		0ACH-000001			
37	4190264	CLIP	4		0ACH-000001			
40	4418301	BRACKET	1		0ACH-000001			
42	TB03796	WIRE HARNESS; ENGINE/FRAME	1		0ACH-000001			
43	4190253	CLIP	1		0ACH-000001			
44	4190272	CLIP	1		0ACH-000001			

ELECTRICAL PARTS (D)

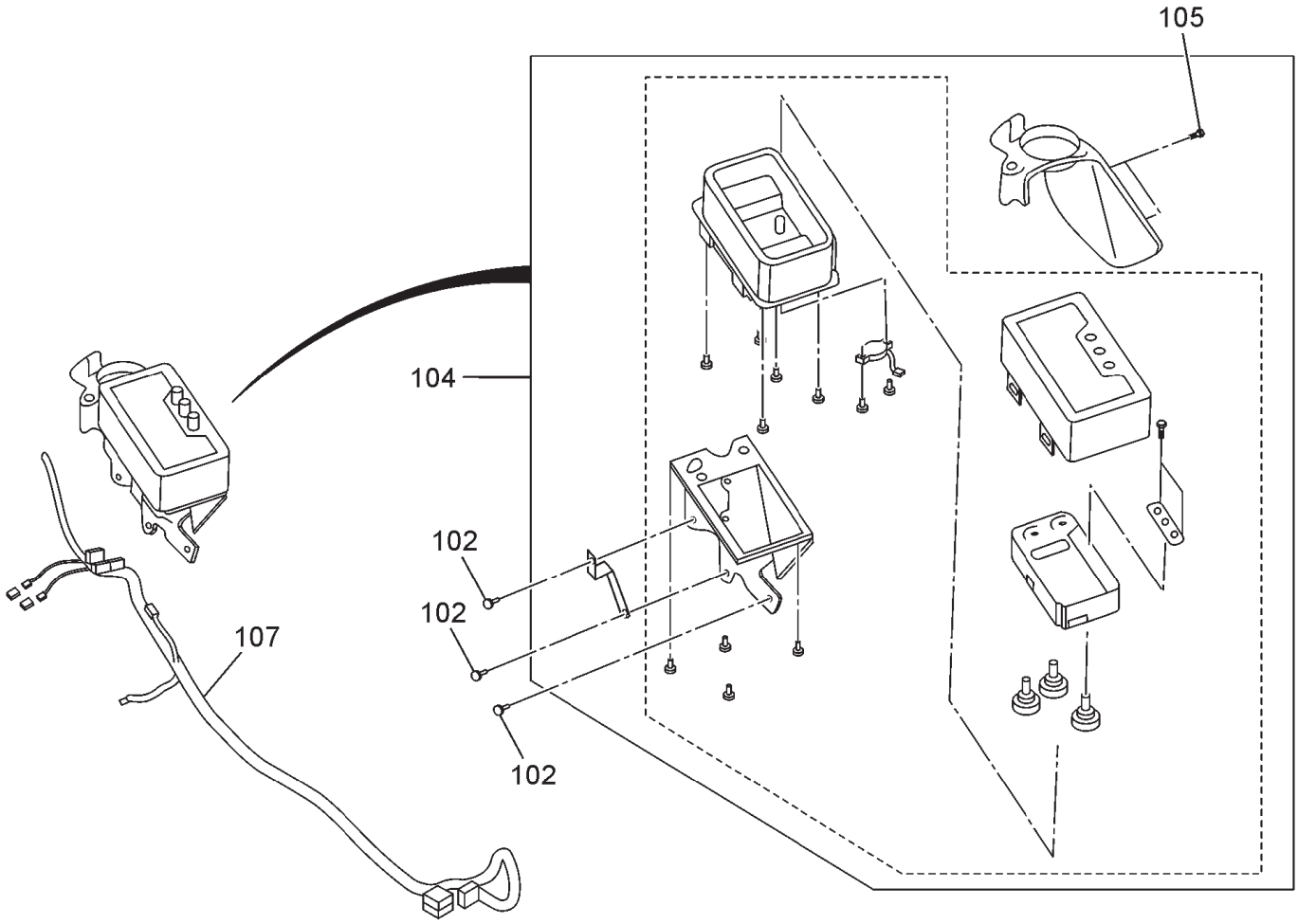

ELECTRICAL PARTS (D)

ITEM	PART NO.	PART NAME	QTY	S.C.	MACHINE SERIAL NO. ONWARDS	ICA	REPLACEABLE PART	
							PART NO.	QTY
--	**TB03740**	**ELECTRIC PARTS (D)**	**--**					
102	J260816	BOLT; SEMS	3	D	0ACH-000001	T		
104	YA00017356	MONITOR	1		0ACH-000001			
105	J460614	SCREW;SEMS	1		0ACH-000001			
107	TB03702	WIRE HARNESS ASSY.	1		0ACH-000001			
108	TE03012	PLUG	1		0ACH-000001			
109	TE03013	PLUG	1		0ACH-000001			

ELECTRICAL PARTS (E)

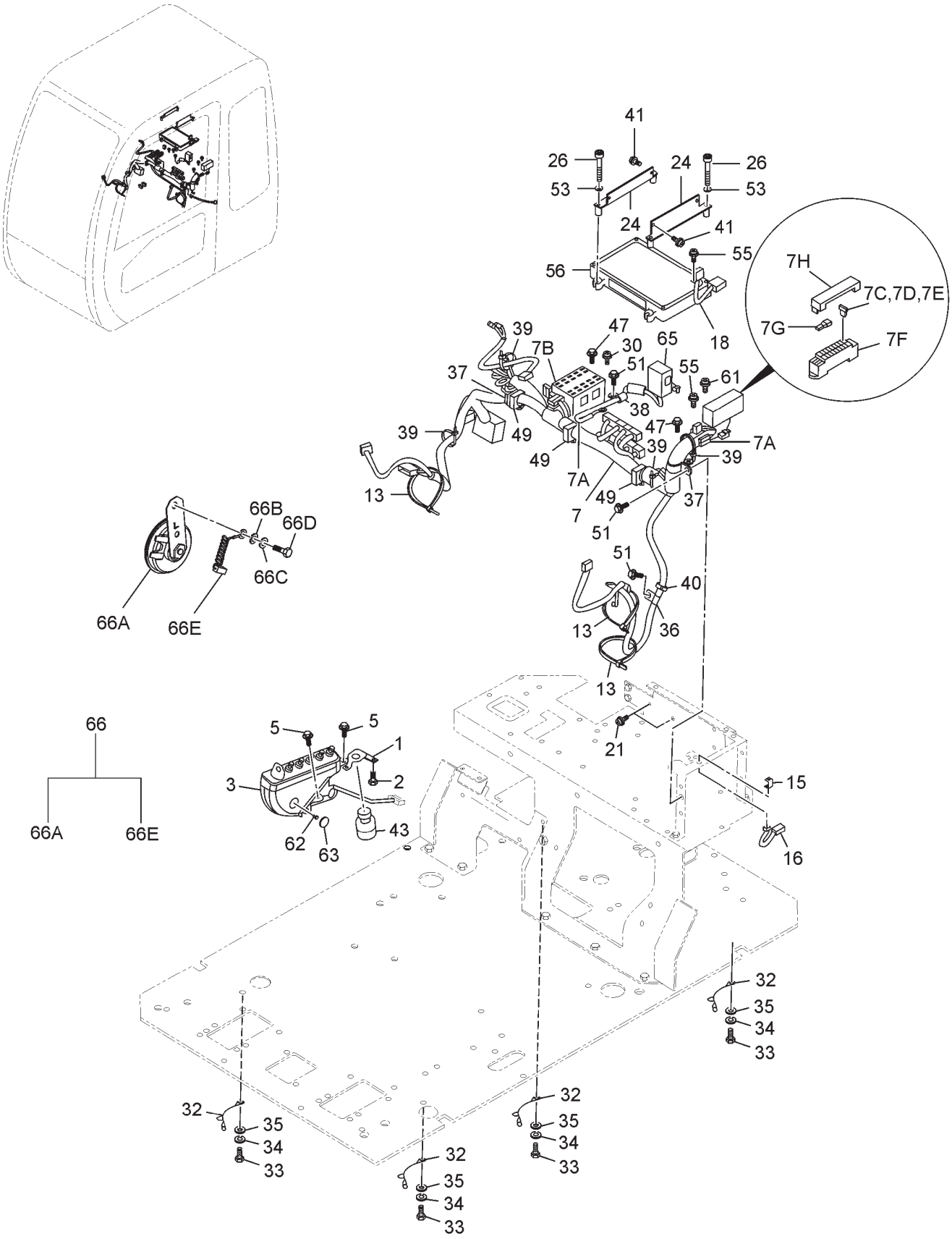

ELECTRICAL PARTS (E)

ITEM	PART NO.	PART NAME	QTY	S.C.	MACHINE SERIAL NO. ONWARDS	ICA	REPLACEABLE PART	
							PART NO.	QTY
--	**9204852**	**ELECTRIC PARTS (E)**	--					
1	3087882	BRACKET	1		0ACH-000001			
2	4361800	SCREW;TAPPING	3		0ACH-000001			
3	4454518	BOX;SWITCH	1		0ACH-000001			
6	TD21638	BRACKET; RELAY MOUNTING	1		0ACH-000001			
7	TB03701	WIRE HARNESS	1		0ACH-000001			
8	TD21659	BRACKET (CONNECTOR LOCKING)	1		0ACH-000001			
9	TE24373	BRACKET FUSE BOX MOUNTING	2		0ACH-000001			
12	J460620	SCREW;SEMS	2		0ACH-000001			
13	4323613	CLIP;BAND	3		0ACH-000001			
15	TE10687	BRACKET	1		0ACH-000001			
16	TD08344	SWITCH TOGGLE	1		0ACH-000001	I		
17	TE09239	COVER	1		0ACH-000248			
18	TD08420	HARNESS; WIRE ICX	1		0ACH-000001			
21	J460616	SCREW;SEMS	14		0ACH-000001			
24	8082329	BRACKET	2		0ACH-000001			
26	M430660	SCREW	4		0ACH-000001			
30	J460620	SCREW;SEMS	4		0ACH-000001			
32	4281293	HARNESS;WIRE	4		0ACH-000001			
33	J901016	HEX BOLT	4		0ACH-000001			
34	A590910	SPR.WASHER	4		0ACH-000001			
35	A590110	WASHER;PLANE	4		0ACH-000001			
36	4190261	CLIP	1		0ACH-000001			
37	4192035	CLIP	1		0ACH-000001			
38	4190253	CLIP	1		0ACH-000001			
39	4055312	CLIP;BAND	5		0ACH-000001			
40	4055311	CLIP;BAND	1		0ACH-000001			
41	J460510	SCREW;SEMS	4		0ACH-000001			
43	4618056	SWITCH;START	1		0ACH-000001			
47	J260816	BOLT;SEMS	5	D	0ACH-000001	T		
49	4449019	CLIP	3		0ACH-000001			
51	J271020	BOLT;SEMS	3	D	0ACH-000001	T		
53	A590106	WASHER;PLANE	4		0ACH-000001			
55	J460310	SCREW	4		0ACH-000001			
56	9226755	CONTROLLER	1		0ACH-000001	I		
61	J460620	SCREW;SEMS	2		0ACH-000001			
62	4381572	SCREW	1		0ACH-000001			
63	4426354	CAP	1		0ACH-000001			
66	TE06853	HORN ASSY	1		0ACH-000001			
66A	TD20482	HORN 24V	1		0ACH-000001			
66B	A590910	SPR.WASHER	1		0ACH-000001			
66C	A590110	WASHER;PLANE	1		0ACH-000001			
66D	J901030	BOLT	1		0ACH-000001			

COVER (1)

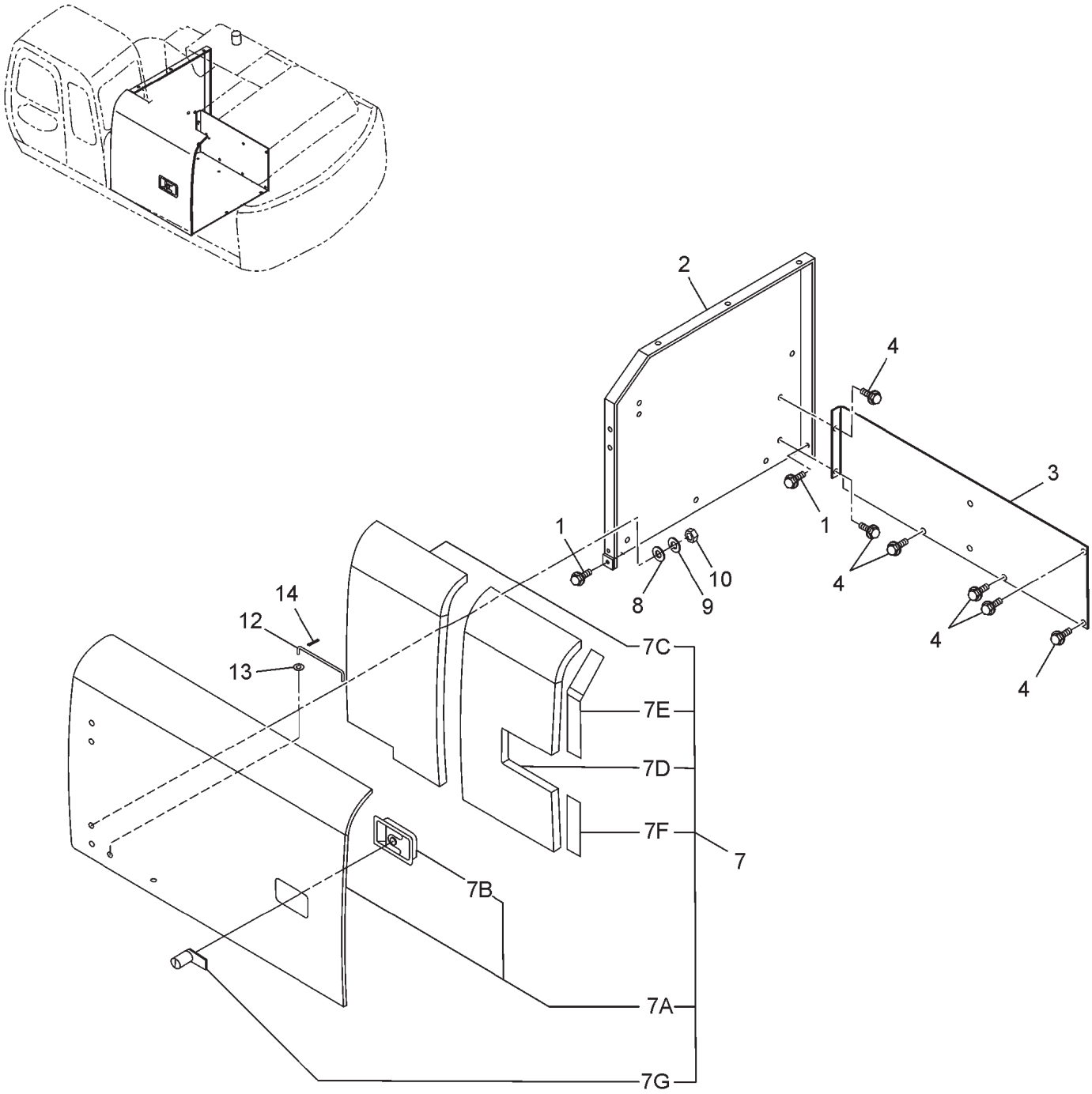

COVER (1)

ITEM	PART NO.	PART NAME	QTY	S.C.	MACHINE SERIAL NO. ONWARDS	ICA	REPLACEABLE PART	
							PART NO.	QTY
--	**9191477**	**COVER (1)**	--					
1	J021030	BOLT;SEMS	2		0ACH-000001			
2	7040380	COVER	1		0ACH-000001			
3	3089827	COVER	1		0ACH-000001			
4	J031030	BOLT;SEMS	6		0ACH-000001			
7	7038798	DOOR	1		0ACH-000001			
7A	5007209	DOOR	1		0ACH-000001			
7B	4409396	CYL.; LOCK	1		0ACH-000001	I	4409394	1
7C	4440446	RUBBER	1		0ACH-000001			
7D	4440996	RUBBER	1		0ACH-000001			
7E	4453760	RUBBER	1		0ACH-000001			
7F	4453765	RUBBER	1		0ACH-000001			
7G	4461342	CLIP	1		0ACH-000001			
8	A590110	WASHER;PLANE	4		0ACH-000001			
9	A590910	SPR.WASHER	4		0ACH-000001			
10	J950010	NUT	4		0ACH-000001			
12	4341788	STAY	1		0ACH-000001			
13	A590108	WASHER;PLAN	1		0ACH-000001			
14	4022697	PIN;LOCK	1		0ACH-000001			

COVER ASSY. (3)

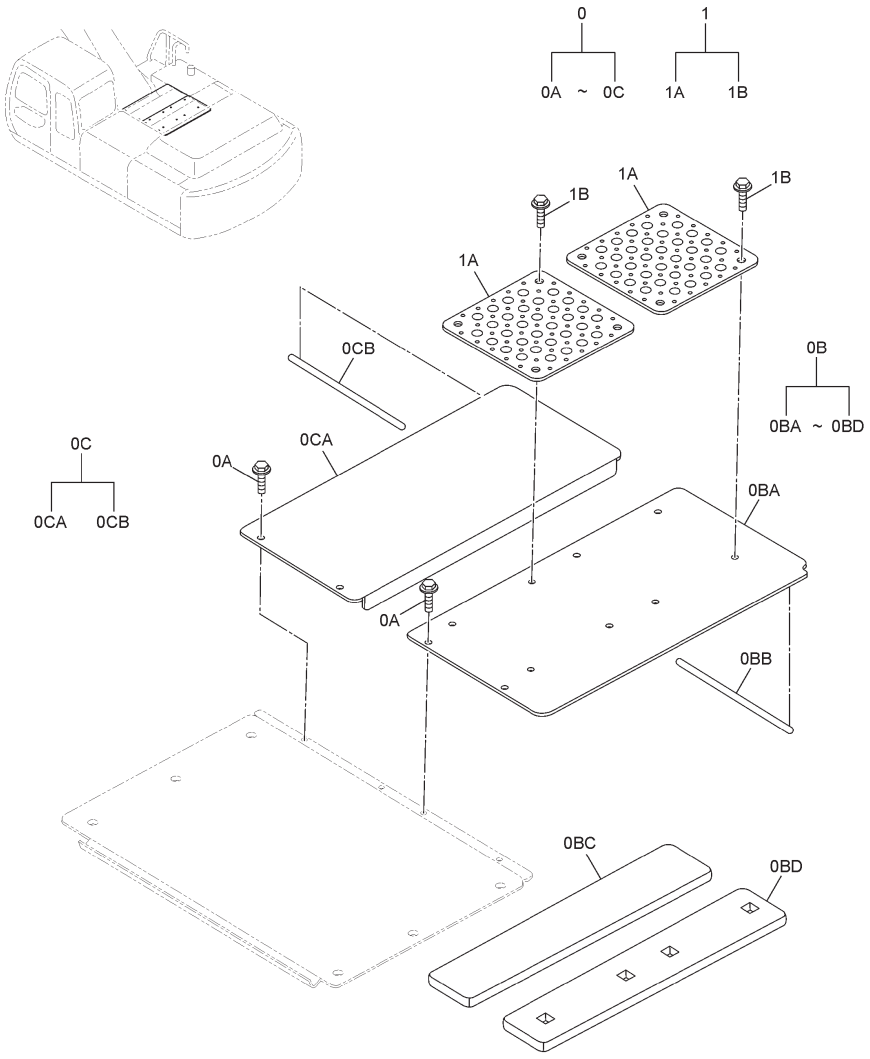

ITEM	PART NO.	PART NAME	QTY	S.C.	MACHINE SERIAL NO. ONWARDS	ICA	REPLACEABLE PART	
							PART NO.	QTY
--	**9191490**	**COVER ASSY. (3)**	**--**					
0	9191479	COVER (3)	1		0ACH-000001			
0A	J021030	BOLT;SEMS	4		0ACH-000001			
0B	7040128	COVER	1		0ACH-000001			
0BA	7040126	COVER	1		0ACH-000001			
0BB	4386754	RUBBER	1		0ACH-000001			
0BC	4451822	RUBBER	1		0ACH-000001			
0BD	4451821	RUBBER	1		0ACH-000001			
0C	7040133	COVER	1		0ACH-000001			
0CA	7040127	COVER	1		0ACH-000001			
0CB	4380253	RUBBER	1		0ACH-000001			
1	9191449	COVER ASSY	1		0ACH-000001			
1A	3091337	COVER	2		0ACH-000001			
1B	J021030	BOLT;SEMS	8		0ACH-000001			

SORRY COVER - (2) IS NOT AVAILABLE IN TEAM CENTER

COVER (4)

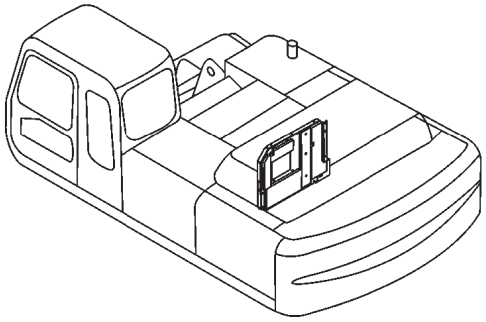

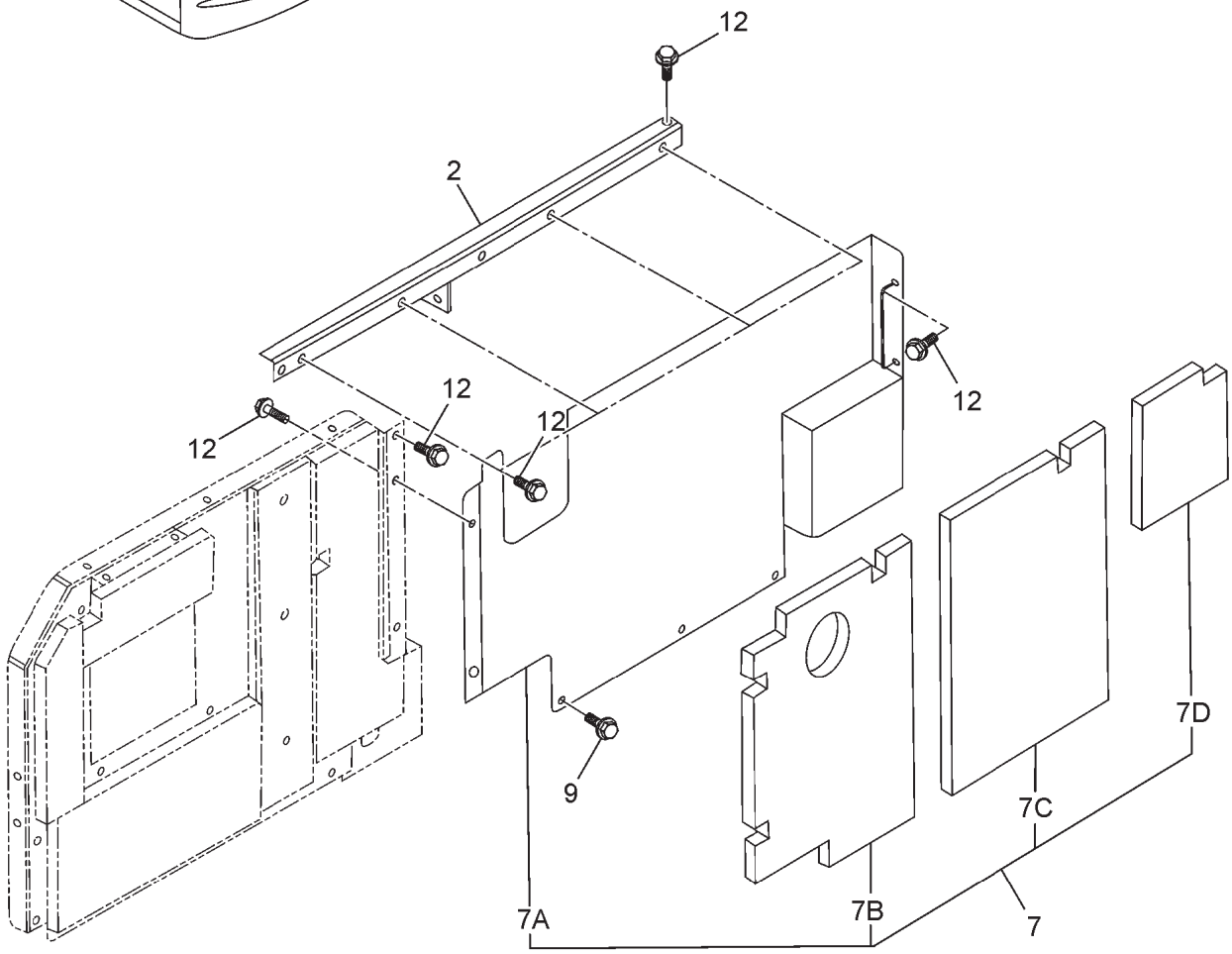

ITEM	PART NO.	PART NAME	QTY	S.C.	MACHINE SERIAL NO. ONWARDS	ICA	REPLACEABLE PART	
							PART NO.	QTY
--	**9191430**	**COVER (4)**	**--**					
2	8089039	COVER	1		0ACH-000001			
7	7040124	COVER	1		0ACH-000001			
7A	7040120	COVER	1		0ACH-000001			
7B	4445469	RUBBER	1		0ACH-000001			
7C	4445473	RUBBER	1		0ACH-000001			
7D	4445474	RUBBER	1		0ACH-000001			
9	J281035	BOLT;SEMS	3	D	0ACH-000001	T		
12	J031030	BOLT;SEMS	10		0ACH-000001			

COVER (5)

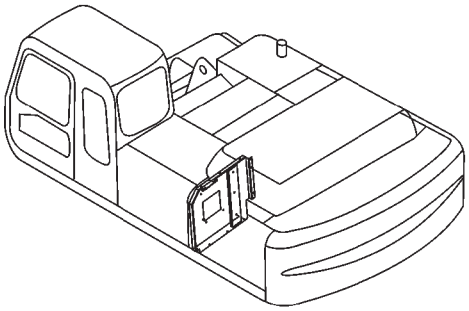

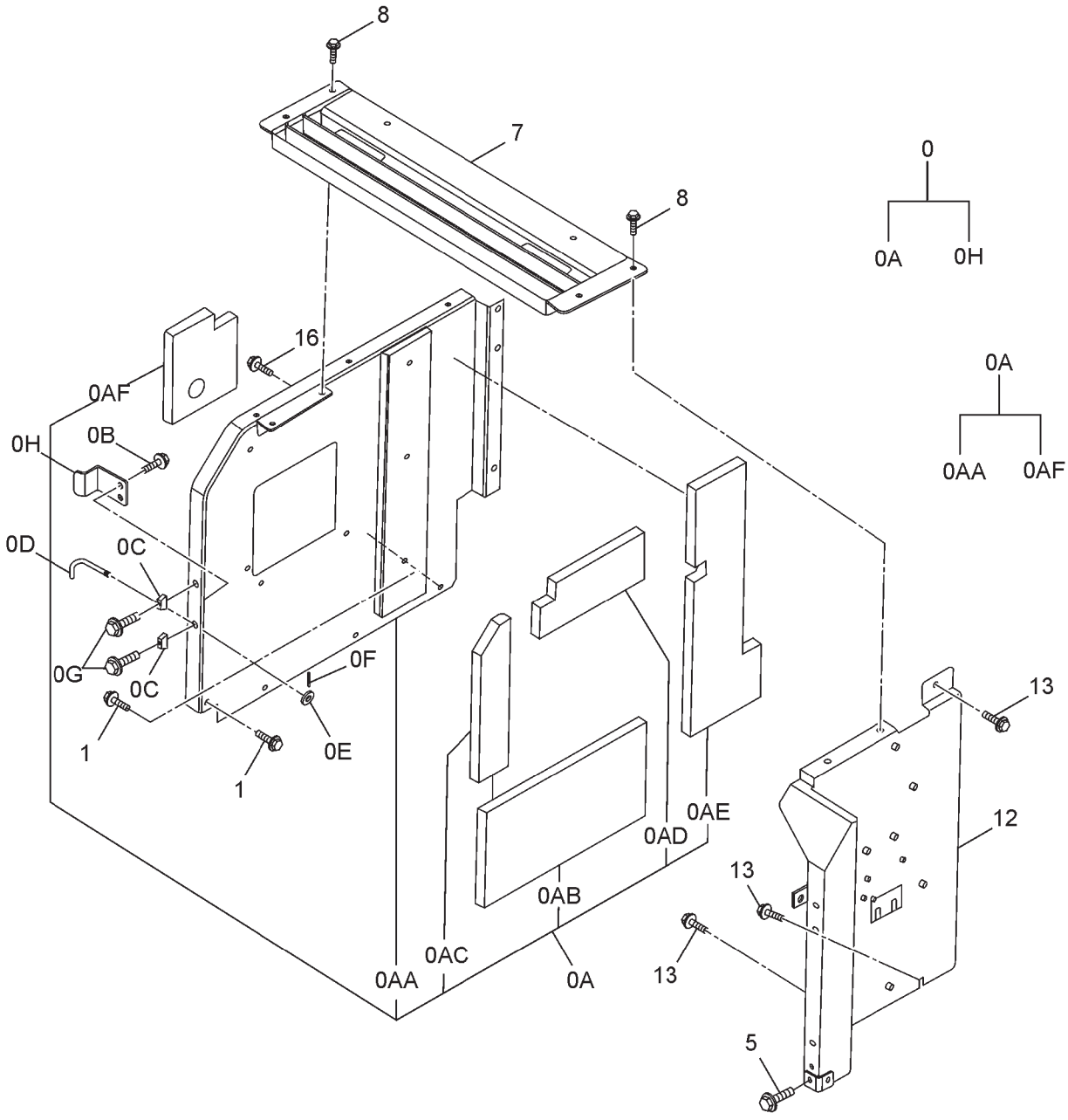
8
7
8
16
0AF
0H
0B
0D
0C
0G
0C
0F
1
1
0E
0AA
0AC
0AB
0A
0AD
0AE
13
12
13
13
5
0
0A
0H
0A
0AA
0AF

COVER (5)

ITEM	PART NO.	PART NAME	QTY	S.C.	MACHINE SERIAL NO. ONWARDS	ICA	REPLACEABLE PART	
							PART NO.	QTY
--	**9191481**	**COVER (5)**	**--**					
0	9192245	COVER	1		0ACH-000001			
0A	7038780	COVER	1		0ACH-000001			
0AA	6019326	COVER	1		0ACH-000001			
0AB	4440161	RUBBER	1		0ACH-000001			
0AC	4440162	RUBBER	1		0ACH-000001			
0AD	4440163	RUBBER	1		0ACH-000001			
0AE	4440164	RUBBER	1		0ACH-000001			
0AF	4459013	RUBBER	1		0ACH-000001			
0B	J031030	BOLT;SEMS	2		0ACH-000001			
0C	4424157	STOPPER	2		0ACH-000001			
0D	9751797	STAY	1		0ACH-000001			
0E	A590106	WASHER;PLANE	1		0ACH-000001			
0F	4022696	PIN;LOCK	1		0ACH-000001			
0G	J260635	BOLT;SEMS	2	D	0ACH-000001	T		
0H	4431357	STOPPER	1		0ACH-000001			
1	J021030	BOLT;SEMS	4		0ACH-000001			
5	J021030	BOLT;SEMS	1		0ACH-000001			
7	7038753	COVER	1		0ACH-000001			
8	J021030	BOLT;SEMS	4		0ACH-000001			
12	6019616	COVER	1		0ACH-000001			
13	J031030	BOLT;SEMS	3		0ACH-000001			
16	J031025	BOLT;SEMS	2		0ACH-000001			

COVER (6)

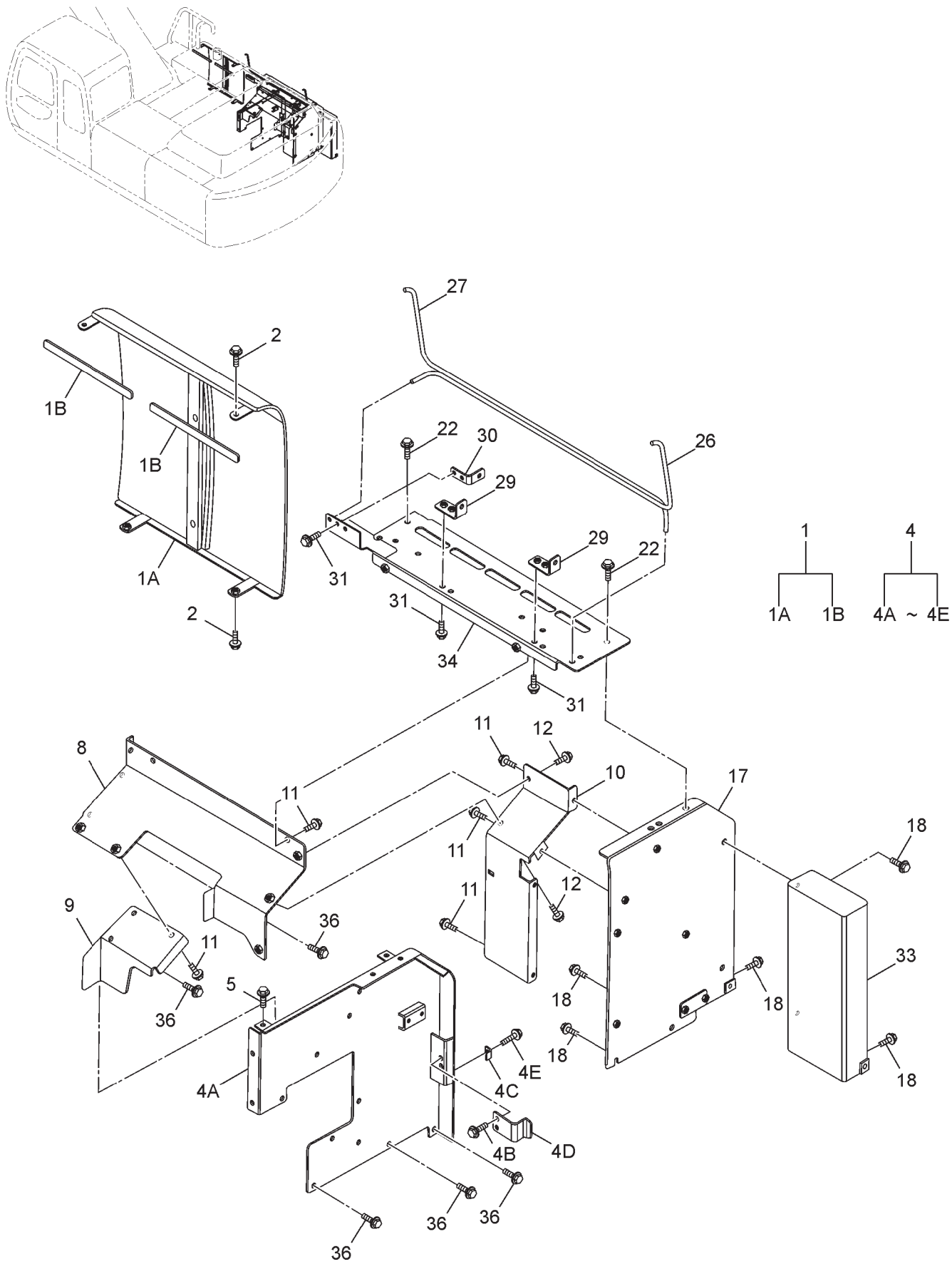

27
2
1B
1B
22
30
26
29
29
22
1A
31
31
2
34
31
1
4
1A
1B
4A ~ 4E
11
12
8
10
17
11
11
18
11
12
9
36
11
33
5
18
18
36
18
4E
4A
4C
18
4B
4D
36
36
36

COVER (6)

ITEM	PART NO.	PART NAME	QTY	S.C.	MACHINE SERIAL NO. ONWARDS	ICA	REPLACEABLE PART	
							PART NO.	QTY
--	**9191482**	**COVER (6)**	**--**					
1	8084579	COVER ASSEMBLY	1		0ACH-000001			
1A	6019318	COVER	1		0ACH-000001			
1B	4451865	RUBBER	2		0ACH-000001			
2	J031030	BOLT;SEMS	4		0ACH-000001			
4	9192323	COVER	1		0ACH-000001			
4A	6019350	COVER	1		0ACH-000001			
4B	J031030	BOLT;SEMS	2		0ACH-000001			
4C	4424157	STOPPER	1		0ACH-000001			
4D	4431357	STOPPER	1		0ACH-000001			
4E	J260635	BOLT;SEMS	1		0ACH-000001			
5	J031030	BOLT;SEMS	2		0ACH-000001			
8	7040070	COVER	1		0ACH-000001			
9	8083414	COVER	1		0ACH-000001			
10	3091565	COVER	1		0ACH-000001			
11	J021030	BOLT;SEMS	8		0ACH-000001			
12	J031030	BOLT;SEMS	3		0ACH-000001			
17	7039928	COVER	1		0ACH-000001			
18	J021030	BOLT;SEMS	6		0ACH-000001			
22	J021030	BOLT;SEMS	4		0ACH-000001			
26	4386544	BAR;TORSION	1		0ACH-000001			
27	4441089	BAR;TORSION	1		0ACH-000001			
29	9748439	BRACKET	2		0ACH-000001			
30	9748440	BRACKET	1		0ACH-000001			
31	J021030	BOLT;SEMS	6		0ACH-000001			
33	8085006	COVER	1		0ACH-000001			
34	7040942	COVER	1		0ACH-000001			
36	J021025	BOLT;SEMS	7		0ACH-000001			

COVER (8)

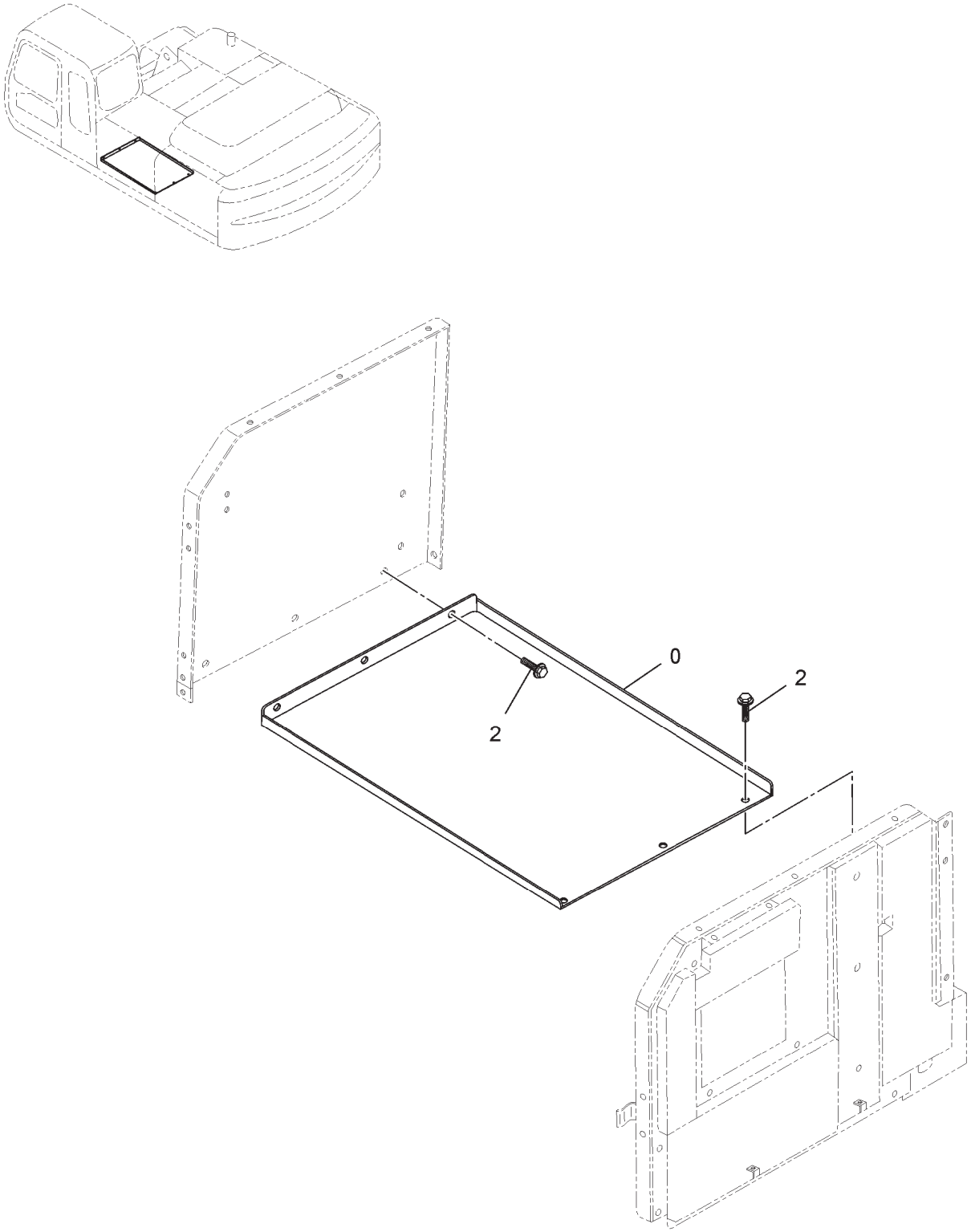

ITEM	PART NO.	PART NAME	QTY	S.C.	MACHINE SERIAL NO. ONWARDS	ICA	REPLACEABLE PART	
							PART NO.	QTY
--	**9191484**	**COVER (8)**	**--**					
0	7038778	COVER	1		0ACH-000001			
2	J031030	BOLT;SEMS	6		0ACH-000001			

SORRY COVER - (7) IS NOT AVAILABLE IN TEAM CENTER

UNDER COVER

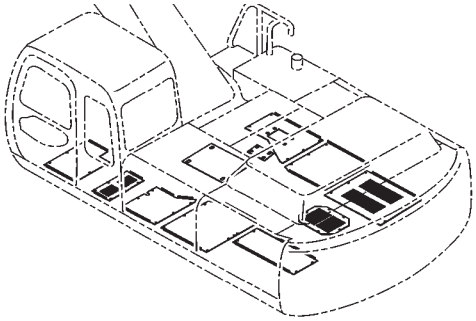

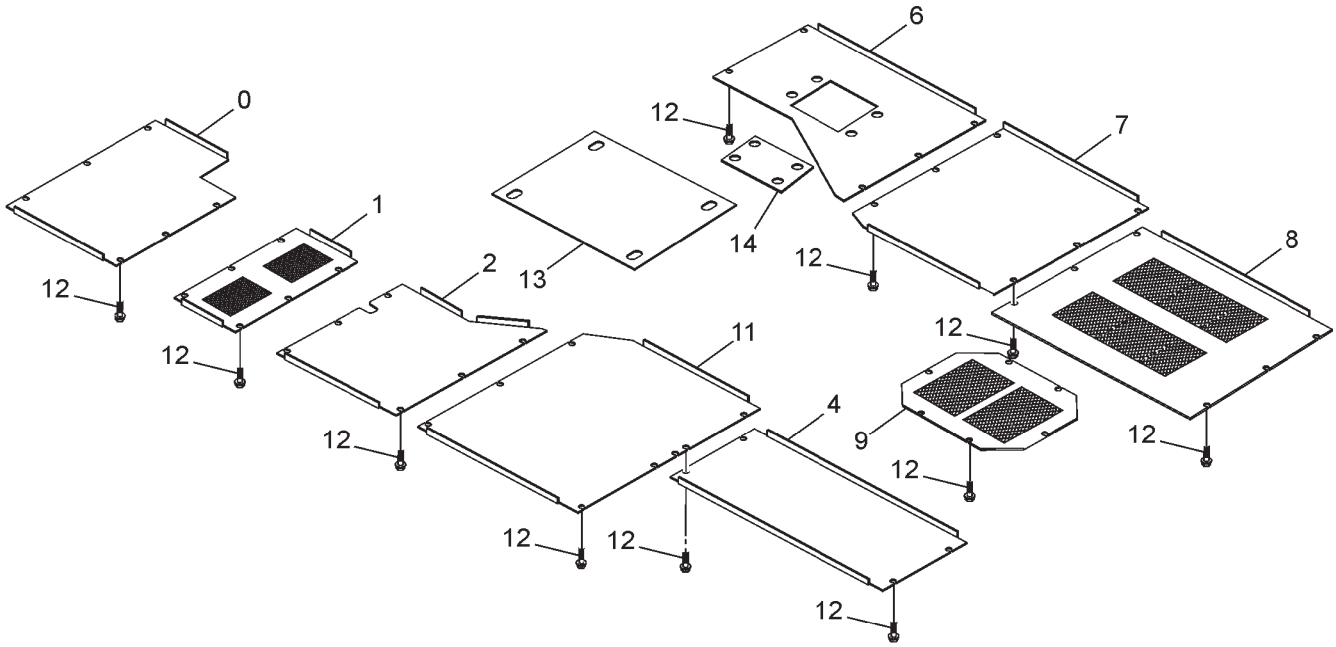

ITEM	PART NO.	PART NAME	QTY	S.C.	MACHINE SERIAL NO. ONWARDS	ICA	REPLACEABLE PART	
							PART NO.	QTY
--	**TA00680**	**UNDER COVER**	**--**					
0	3090007	COVER	1		0ACH-000001			
1	3090008	COVER	1		0ACH-000001			
2	3090009	COVER	1		0ACH-000001			
4	TD01650	COVER	1		0ACH-000001			
6	TC01661	COVER	1		0ACH-000001			
7	TC01660	COVER	1		0ACH-000001			
8	2045474	COVER	1		0ACH-000001			
9	3091367	COVER	1		0ACH-000001			
11	2047381	COVER	1		0ACH-000001			
12	J901035	BOLT	59		0ACH-000234			
13	TE06726	SHEET	1		0ACH-000001			
14	TE05299	COVER	2		0ACH-000013			
15	A590910	SPR.WASHER	59		0ACH-000234			
16	12650601058	WASHER	59		0ACH-000234			

ENGINE COVER

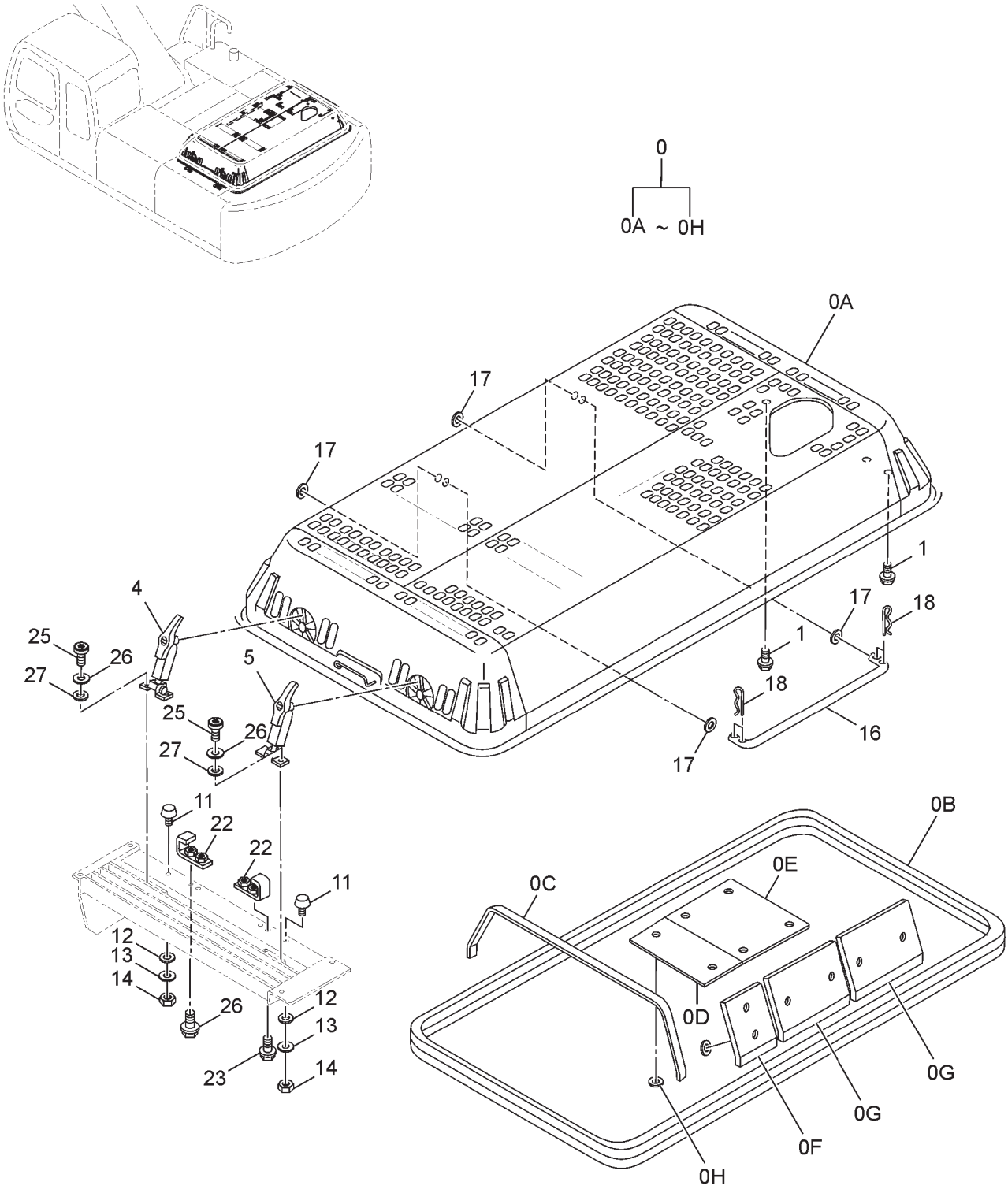

ENGINE COVER

ITEM	PART NO.	PART NAME	QTY	S.C.	MACHINE SERIAL NO. ONWARDS	ICA	REPLACEABLE PART	
							PART NO.	QTY
--	**9191485**	**ENGINE COVER**	**--**					
0	5007233	COVER;ENGINE	1		0ACH-000001			
0A	5007225	COVER;ENGINE	1		0ACH-000001			
0B	4440919	RUBBER	1		0ACH-000001			
0C	4440703	RUBBER	1		0ACH-000001			
0D	4440914	RUBBER	1		0ACH-000001			
0E	4440915	RUBBER	1		0ACH-000001			
0F	4440916	RUBBER	1		0ACH-000001			
0G	4440917	RUBBER	2		0ACH-000001			
0H	4287137	WASHER	12		0ACH-000001			
1	J021030	BOLT;SEMS	4		0ACH-000001			
4	4429045	CATCH	1		0ACH-000001			
5	4429044	CATCH	1		0ACH-000001			
11	4294508	STOPPER	2		0ACH-000001			
12	A590110	WASHER;PLANE	2		0ACH-000001			
13	A590910	WASHER;SPRG	2		0ACH-000001			
14	J950010	NUT	2		0ACH-000001			
16	4278783	STAY	1		0ACH-000001			
17	A590116	WASHER;PLANE	4		0ACH-000001			
18	4022701	PIN;LOCK	4		0ACH-000001			
22	9749842	BRACKET	2		0ACH-000001			
23	J021030	BOLT;SEMS	4		0ACH-000001			
25	M430825	SCREW	4		0ACH-000001			
26	A590908	WASHER;SPRG	4		0ACH-000001			
27	A590108	WASHER;PLANE	4		0ACH-000001			

TOOL COVER ASSY.

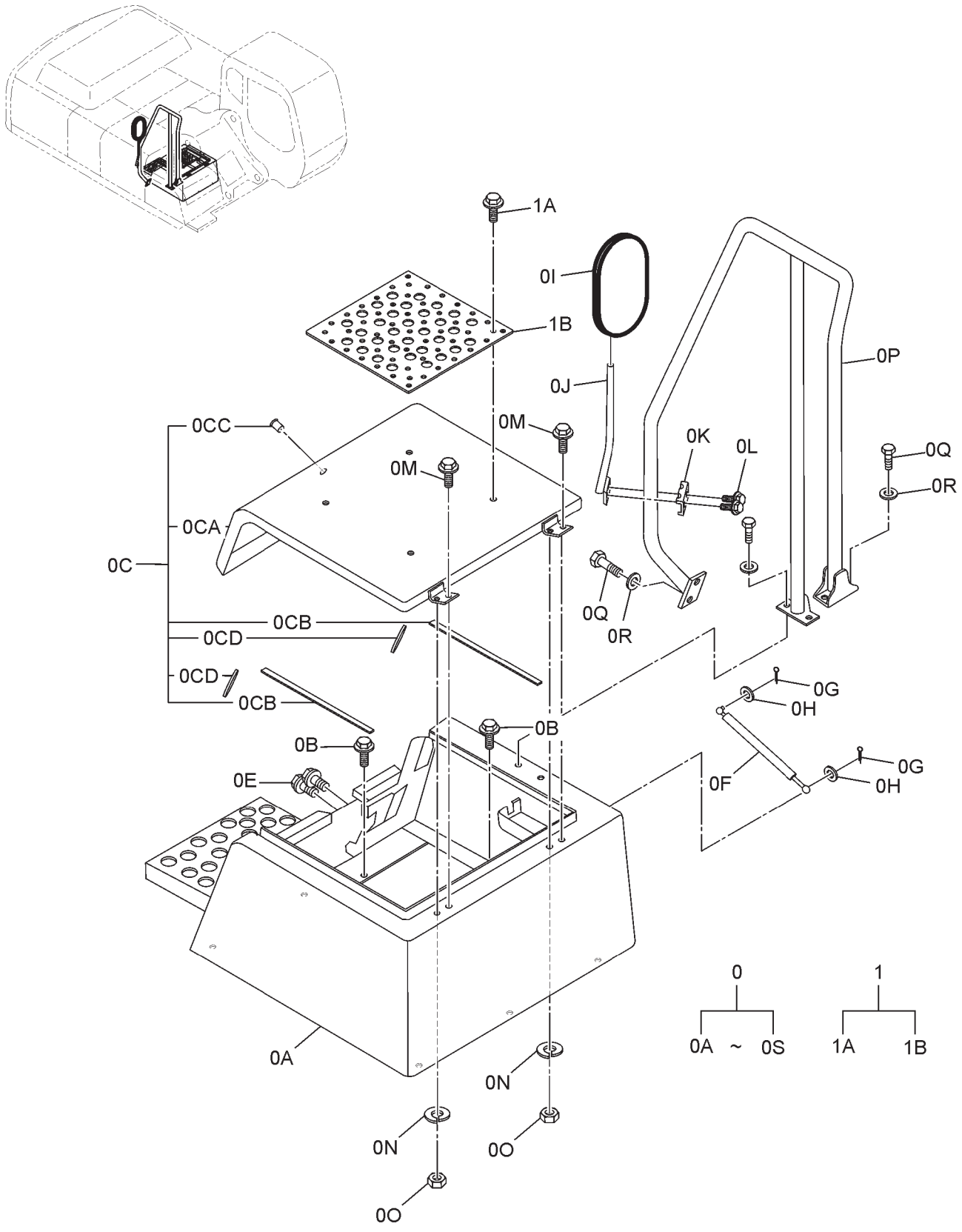

TOOL COVER ASSY

ITEM	PART NO.	PART NAME	QTY	S.C.	MACHINE SERIAL NO. ONWARDS	ICA	REPLACEABLE PART	
							PART NO.	QTY
--	**9191486**	**TOOL COVER ASSY.**	**--**					
0	9191486	COVER;TOOL	1		0ACH-000001			
0A	6019360	BOX;TOOL	1		0ACH-000001			
0B	J271025	BOLT;SEMS	6	D	0ACH-000001	T		
0C	7040600	COVER	1		0ACH-000001			
0CA	6019996	COVER	1		0ACH-000001			
0CB	4388212	RUBBER	2		0ACH-000001			
0CC	4379989	CYL.LOCK	1		0ACH-000001			
0CD	4631410	RUBBER	2		0ACH-000001			
0D	9745798	CATCH	1		0ACH-000001			
0E	J281025	BOLT;SEMS	2	D	0ACH-000001	T		
0F	4352457	STAY	1		0ACH-000001			
0G	4022697	PIN;LOCK	2		0ACH-000001			
0H	A590110	WASHER;PLANE	2		0ACH-000001			
0I	4416704	MIRROR	1		0ACH-000001			
0J	8077521	STAY	1		0ACH-000001			
0K	4425481	CLAMP	1		10ACH-000001			
0L	J260855	BOLT;SEMS	2	D	0ACH-000001	T		
0M	J271025	BOLT;SEMS	2	D	0ACH-000001	T		
0N	A590910	SPR.WASHER M10	2		0ACH-000001			
0O	J950010	NUT	2		0ACH-000001			
0P	6019738	STAY	1		0ACH-000001			
0Q	J921235	BOLT	6		0ACH-000001			
0R	A590112	WASHER;PLN	6		0ACH-000001			
0S	A590912	WASHER;SPRING	6		0ACH-000001			
1	9196157	TOOL;NONSLIP	1		0ACH-000001			
1A	J021030	BOLT;SEMS	4		0ACH-000001			
1B	3091337	COVER	1		0ACH-000001			

TROPICAL COVER

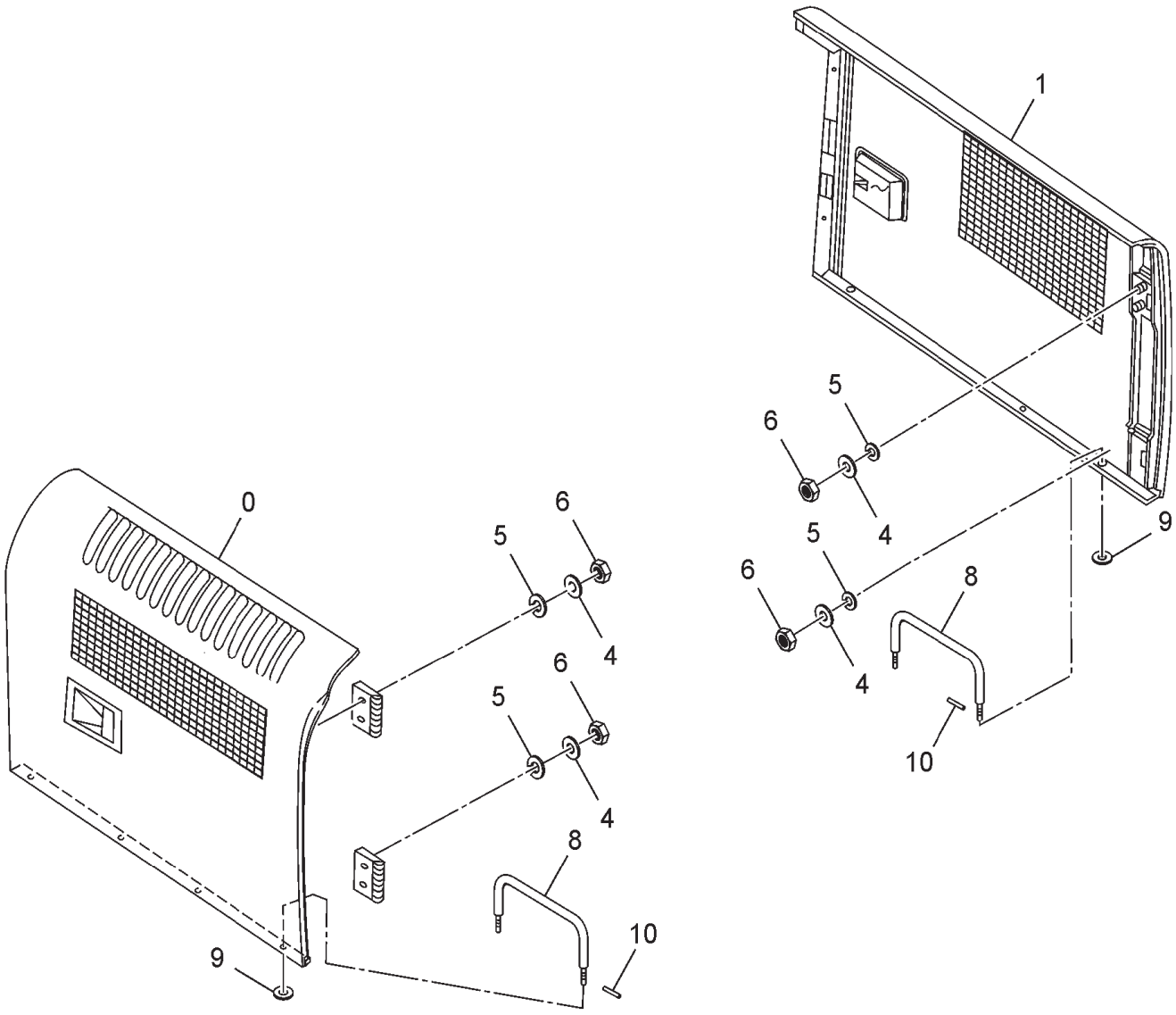

TROPICAL COVER

ITEM	PART NO.	PART NAME	QTY	S.C.	MACHINE SERIAL NO. ONWARDS	ICA	REPLACEABLE PART	
							PART NO.	QTY
--	**9211493**	**TROPICAL COVER**	**--**					
0	7042071	DOOR	1		0ACH-000001			
0A	5007935	DOOR	1	W	0ACH-000001			
0B	4425576	RUBBER	1		0ACH-000001			
1	7042138	DOOR	1		0ACH-000001			
1A	5008238	DOOR	1		0ACH-000001			
1B	4409396	CYL.; LOCK	1		0ACH-000001			
1C	4425575	RUBBER	1		0ACH-000001			
1D	4461342	CLIP	1		0ACH-000001			
4	A590110	WASHER;PLANE	8		0ACH-000001			
5	A590910	SPR.WASHER	8		0ACH-000001			
6	J950010	NUT	8		0ACH-000001			
8	4341788	STAY	2		0ACH-000001			
9	A590108	WASHER;PLANE	2		0ACH-000001			
10	4022697	PIN;LOCK	2		0ACH-000001			

AIR CONDITION (1)

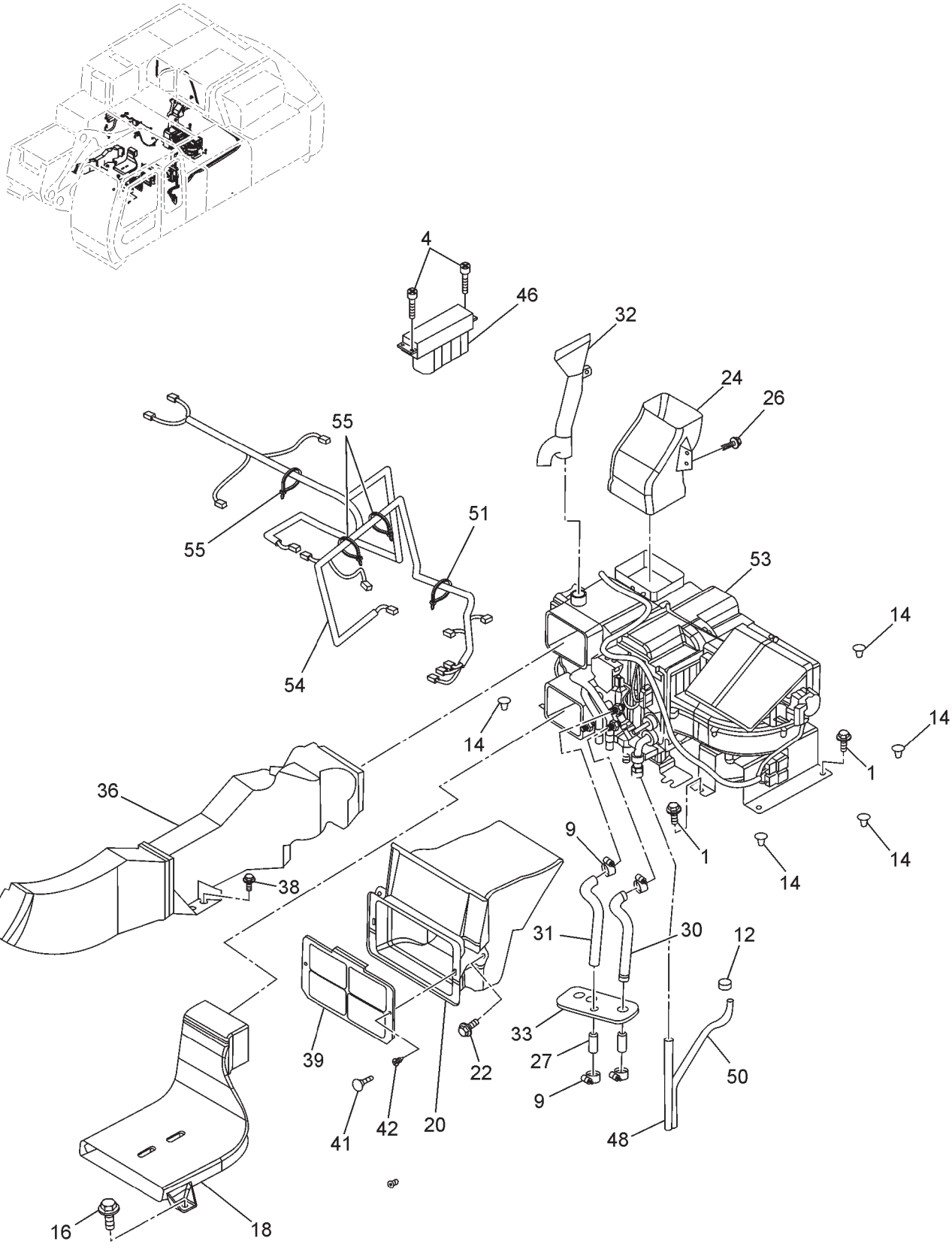

AIR CONDITION (1)

ITEM	PART NO.	PART NAME	QTY	S.C.	MACHINE SERIAL NO. ONWARDS	ICA	REPLACEABLE PART	
							PART NO.	QTY
--	**TE09956**	**AIR CONDITION (1)**	--					
1	J271025	BOLT; SEMS	6	D	0ACH-000001	T		
4	J460514	SCREW	4		0ACH-000001			
9	4514699	CLAMP;HOSE	4		0ACH-000001			
12	4205084	BUSHING;RUBBER	2		0ACH-000001			
14	4280359	CLIP	6		0ACH-000001			
16	4426155	DUCT	1		0ACH-000001			
18	J271025	BOLT; SEMS	2	D	0ACH-000001	T		
20	4426162	DUCT	1		0ACH-000001			
22	J260820	BOLT; SEMS	2	D	0ACH-000001	T		
24	4426157	DUCT	1		0ACH-000001			
26	J460616	SCREW;SEMS	2		0ACH-000001			
27	4347396	JOINT; PIPE	2		0ACH-000001			
30	4430873	HOSE WATER	1		0ACH-000001			
31	4430872	HOSE WATER	1		0ACH-000001			
32	4436441	DUCT	1		0ACH-000001			
33	2044922	BUSHING;RUBBER	1		0ACH-000001			
35	J460616	SCREW;SEMS	1		0ACH-000001			
36	4426158	DUCT	1		0ACH-000001			
38	J271025	BOLT; SEMS	1	D	0ACH-000001	T		
39	4441139	FILTER	1		0ACH-000001			
41	4441059	CLIP	2		0ACH-000001			
42	4441061	CLIP	2		0ACH-000001			
46	4692239	CONTROLLER	1		0ACH-000001			
48	4430870	HOSE	1		0ACH-000001			
50	4430871	HOSE	1		0ACH-000001			
51	4121859	CLIP;BAND	1		0ACH-000001			
53	4609049	UNIT;AIRCON	1		0ACH-000001			
54	4610412	HARNESS WIRE	1		0ACH-000001			
55	4475769	CLIP	4		0ACH-000001			

AIR CONDITION UNIT

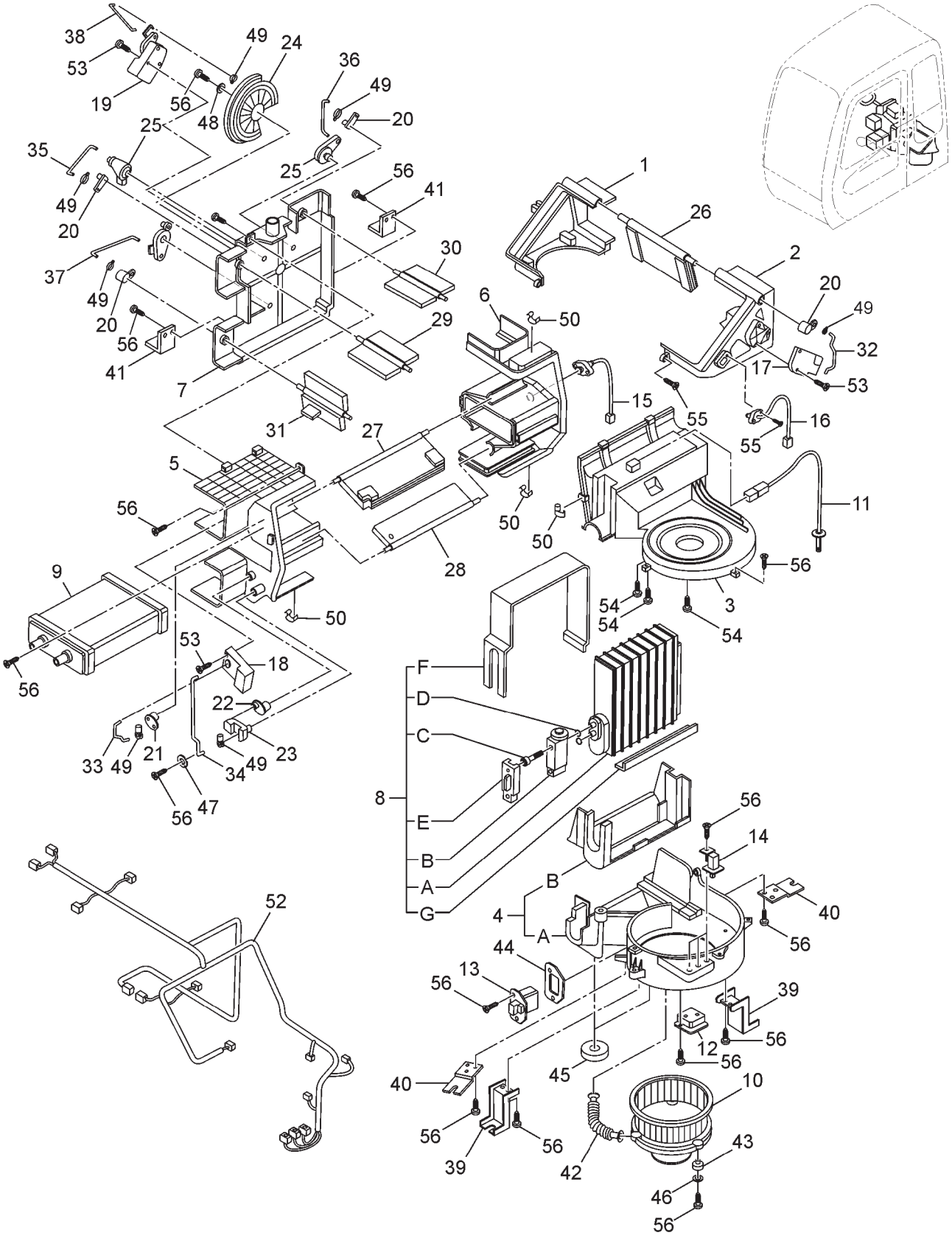

AIR CONDITION UNIT

ITEM	PART NO.	PART NAME	QTY	S.C.	MACHINE SERIAL NO. ONWARDS	ICA	REPLACEABLE PART	
							PART NO.	QTY
1	4464341	CASE	1		0ACH-000001			
2	4464342	CASE	1		0ACH-000001			
3	4464343	CASE	1		0ACH-000001			
4	4464344	CASE ASSY	1		0ACH-000001			
4A	4464345	CASE	1		0ACH-000001			
4B	4464346	LINING	1		0ACH-000001			
5	4464347	CASE	1		0ACH-000001			
6	4464349	CASE	1		0ACH-000001			
7	4464350	CASE	1		0ACH-000001			
8	4464352	EVAPORATOR ASSY	1		0ACH-000001			
8A	4464353	EVAPORATOR	1		0ACH-000001			
8B	4464354	VALVE	1		0ACH-000001			
8C	4464355	BOLT	2		0ACH-000001			
8D	4370249	O-RING	2		0ACH-000001			
8E	4464356	CAP	1		0ACH-000001			
8F	4464357	LINING	1		0ACH-000001			
8G	4464274	LINING	1		0ACH-000001			
9	4464275	HEATER;CORE	1		0ACH-000001			
10	4370266	BLOWER	1		0ACH-000001			
11	4464277	THERMOSTAT	1		0ACH-000001			
12	4464278	RESISTOR	1		0ACH-000001			
13	4464279	TRANSISTOR	1		0ACH-000001			
14	4370269	RELAY	3		0ACH-000001			
15	4464280	SENSOR	1		0ACH-000001			
16	4448925	SENSOR	1		0ACH-000001			
17	4464281	MOTOR	1		0ACH-000001			
18	4464282	MOTOR	1		0ACH-000001			
19	4464283	MOTOR	1		0ACH-000001			
20	4464284	LEVER	4		0ACH-000001			
21	4464285	LEVER	1		0ACH-000001			
22	4464286	LEVER	1		0ACH-000001			
23	4464287	LEVER	1		0ACH-000001			
24	4464288	LEVER	1		0ACH-000001			
25	4464450	LEVER	3		0ACH-000001			
26	4464451	DOOR	1		0ACH-000001			
27	4464452	DOOR	1		0ACH-000001			
28	4464453	DOOR	1		0ACH-000001			
29	4464454	DOOR	1		0ACH-000001			
30	4464455	DOOR	1		0ACH-000001			
31	4464456	DOOR	1		0ACH-000001			
32	4464457	ROD	1		0ACH-000001			
33	4464458	ROD	1		0ACH-000001			
34	4464459	ROD	2		0ACH-000001			
35	4464460	ROD	1		0ACH-000001			

Contd. Next Page. .. ...

AIR CONDITION UNIT

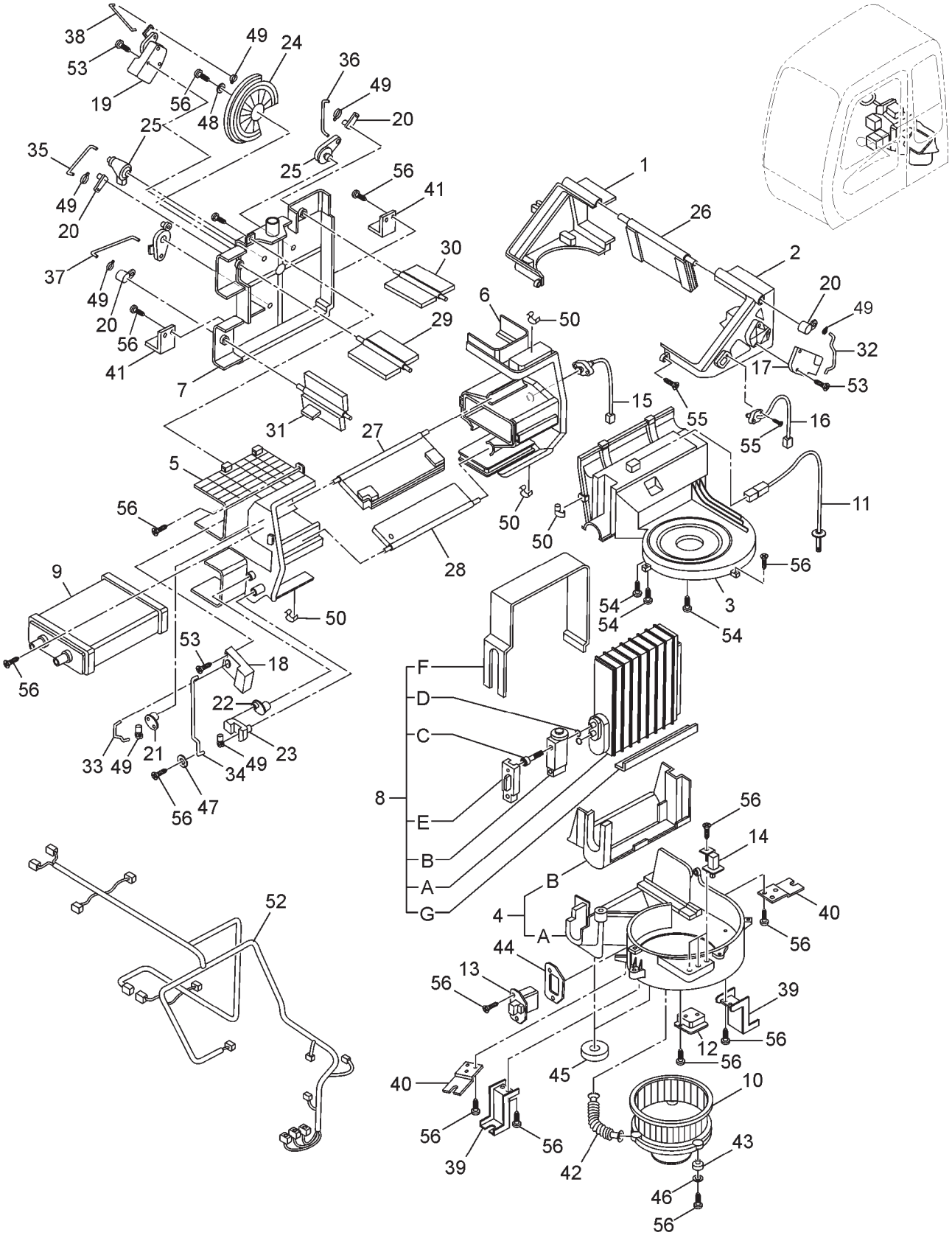

AIR CONDITION UNIT

ITEM	PART NO.	PART NAME	QTY	S.C.	MACHINE SERIAL NO. ONWARDS	ICA	REPLACEABLE PART	
							PART NO.	QTY
36	4464461	ROD	1		0ACH-000001			
37	4464462	ROD	1		0ACH-000001			
38	4464463	ROD	1		0ACH-000001			
39	4370296	BRACKET	2		0ACH-000001			
40	4464465	BRACKET	2		0ACH-000001			
41	4464466	BRACKET	2		0ACH-000001			
42	4464473	HOSE;AIR	1		0ACH-000001			
43	4370267	ISOLATOR	3		0ACH-000001			
44	4464474	SEAL	1		0ACH-000001			
45	4464475	LINING	2		0ACH-000001			
46	4370299	WASHER	3		0ACH-000001			
47	4464476	WASHER	1		0ACH-000001			
48	4370298	WASHER	1		0ACH-000001			
49	4464477	CLIP	7		0ACH-000001			
50	4464478	CLIP	12		0ACH-000001			
52	4464479	HARNESS;WIRE	1		0ACH-000001			
53	4370308	SCREW;TAPPING	9		0ACH-000001			
54	4464480	SCREW;TAPPING	5		0ACH-000001			
55	4370309	SCREW;TAPPING	17		0ACH-000001			
56	4464483	SCREW;TAPPING	32		0ACH-000001			

AIR CONDITION (2)

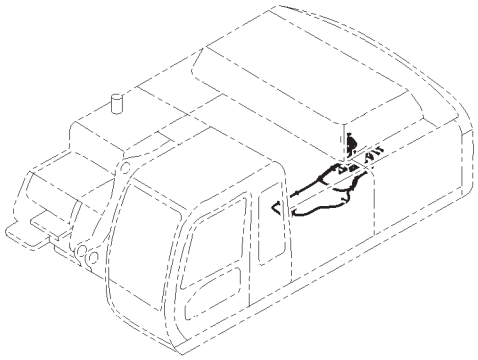

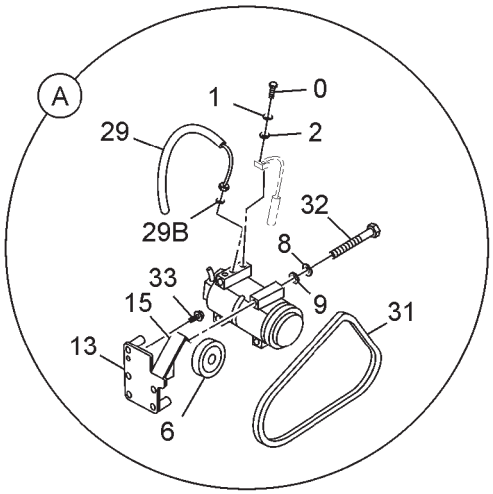

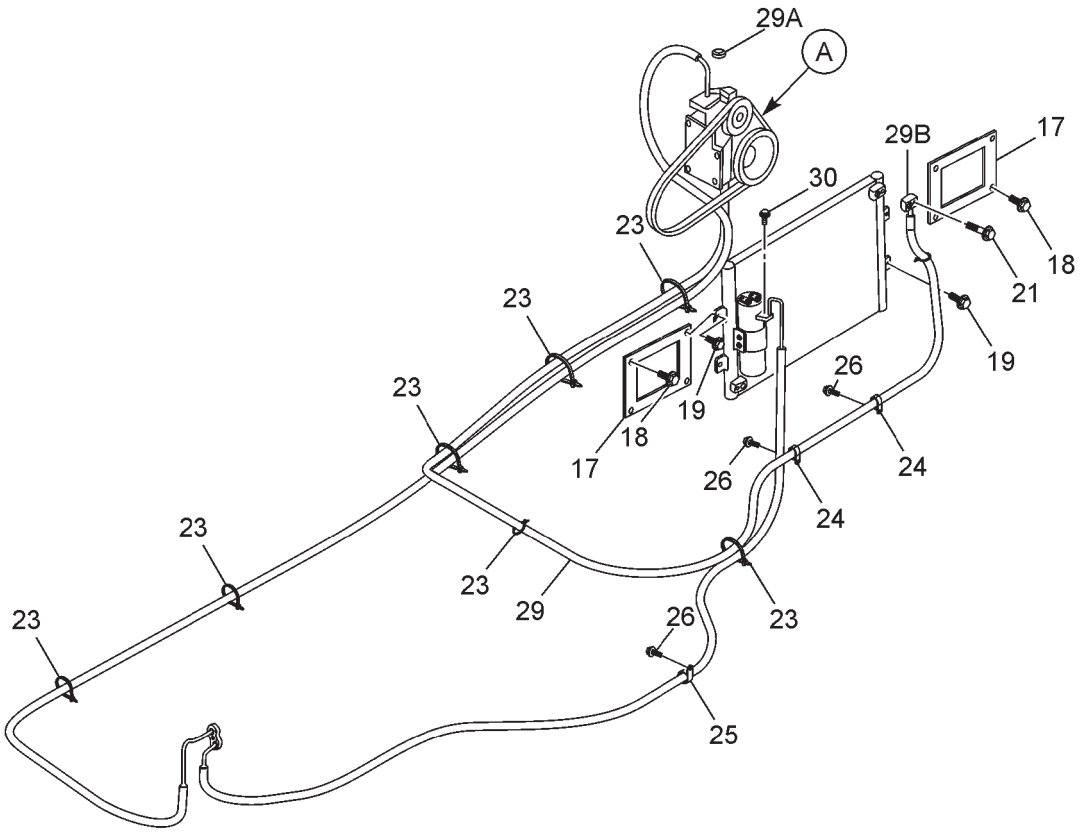

AIR CONDITION (2)

ITEM	PART NO.	PART NAME	QTY	S.C.	MACHINE SERIAL NO. ONWARDS	ICA	REPLACEABLE PART	
							PART NO.	QTY
--	**9191475**	**AIR CONDITIONER (2)**	**--**					
0	J241040	BOLT;SEMS	1		0ACH-000001			
1	A590910	SPR.WASHER	1		0ACH-000001			
2	A590110	WASHER;PLANE	1		0ACH-000001			
6	4346770	PULLEY	1		0ACH-000001			
8	A590908	WASHER;SPRG	4		0ACH-000001			
9	A590108	WASHER;PLANE	4		0ACH-000001			
13	7038065	BRACKET	1		0ACH-000001			
15	A590108	WASHER;PLANE	1		0ACH-000001			
17	9755097	BRACKET	2		0ACH-000001			
18	J271020	BOLT; SEMS	4	D	0ACH-000001	T		
19	J260825	BOLT; SEMS	4	D	0ACH-000001	T		
21	J260835	BOLT; SEMS	1	D	0ACH-000001	T		
23	4055312	CLIP;BAND	8		0ACH-000001			
24	4192035	CLIP	2		0ACH-000001			
25	4190277	CLIP	3		0ACH-000001			
26	J271020	BOLT; SEMS	5	D	0ACH-000001	T		
29	4440219	HOSE	1		0ACH-000001			
29A	4370247	CAP	1		0ACH-000001			
29B	4421946	O-RING	2		0ACH-000001			
30	J260625	BOLT;SEMS	1	D	0ACH-000001	T		
31	4612331	BELT;V	1		0ACH-000001			
32	J900806	BOLT	4		0ACH-000001			
33	J271035	BOLT; SEMS	4	D	0ACH-000001	T		

AIR CONDITION (3)

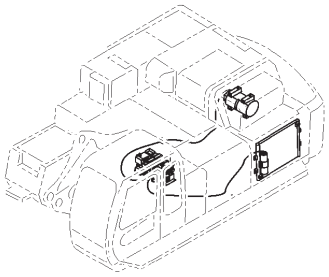

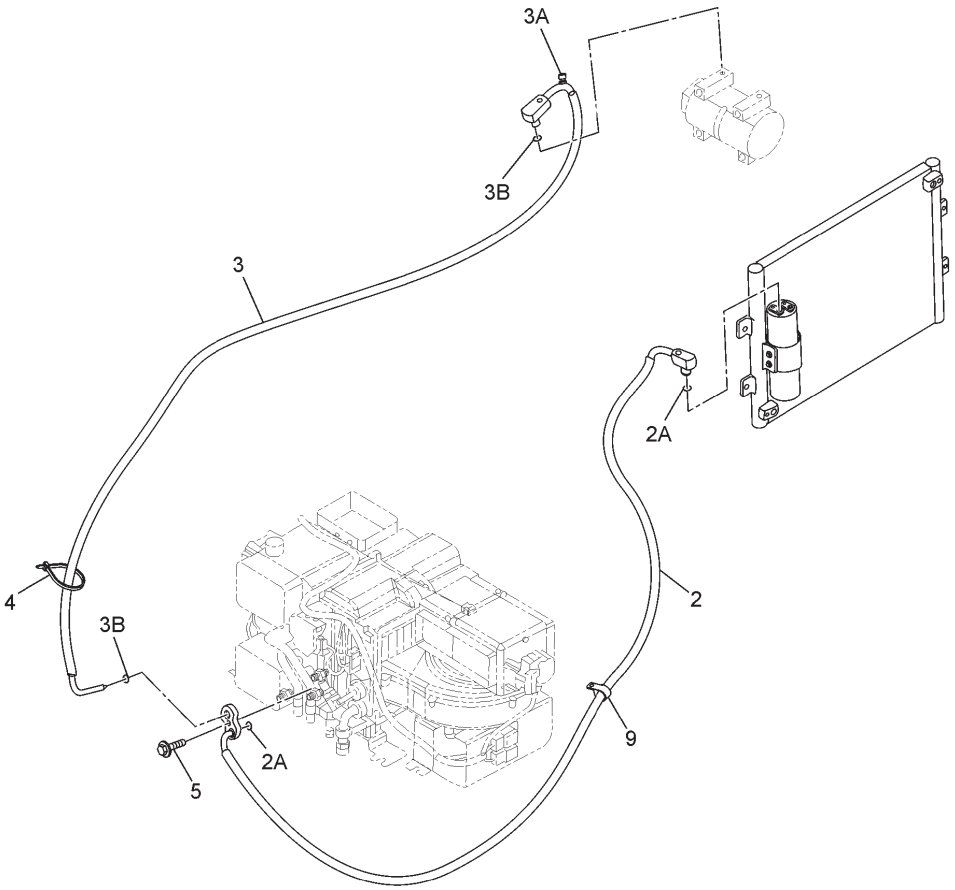

ITEM	PART NO.	PART NAME	QTY	S.C.	MACHINE SERIAL NO. ONWARDS	ICA	REPLACEABLE PART	
							PART NO.	QTY
--	**9191476**	**AIR CONDITIONER (3)**	**--**					
2	4448285	HOSE	1		0ACH-000001			
2A	4422000	O-RING	2		0ACH-000001			
3	4440206	HOSE	1		0ACH-000001			
3A	4370251	CAP	1		0ACH-000001			
3B	4421939	O-RING	2		0ACH-000001			
4	4055312	CLIP;BAND	1		0ACH-000001			
5	J260620	BOLT;SEMS	1	D	0ACH-000001	T		
9	4190277	CLIP	1		0ACH-000001			

AIR CONDITION (4)

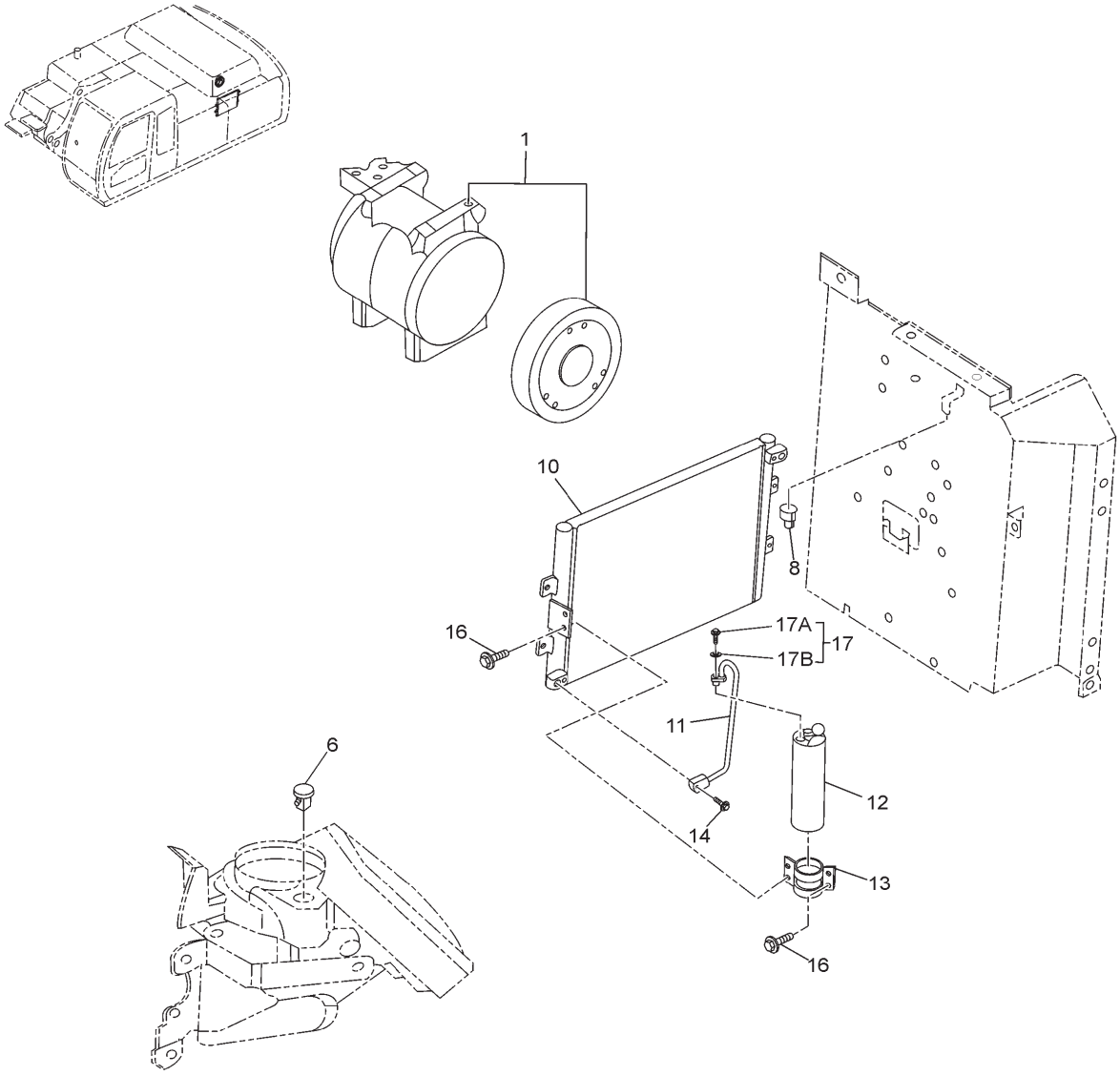

ITEM	PART NO.	PART NAME	QTY	S.C.	MACHINE SERIAL NO. ONWARDS	ICA	REPLACEABLE PART	
							PART NO.	QTY
--	**9186523**	**AIR CONDIONER (4)**	**--**					
1	4456130	COMPRESSOR	1		0ACH-000001			
1A	4623639	COMPRESSOR	1		0ACH-000001			
6	4405166	SENSOR	1		0ACH-000001			
8	4405164	SENSOR	1		0ACH-000001			
10	4602578	CONDENSER	1		0ACH-000001			
11	4477526	PIPE	1		0ACH-000001			
12	4448179	DRYER	1		0ACH-000001			
13	4460399	BRACKET	1		0ACH-000001			
14	J260835	BOLT; SEMS	1	D	0ACH-000001	T		
16	J260620	BOLT;SEMS	4	D	0ACH-000001	T		
17	J260625	BOLT;SEMS	1		0ACH-000001			
17A	J900625	BOLT	1		0ACH-000001			
17B	A590106	WASHER;PLANE	1		0ACH-000001			

CONDENSER NET

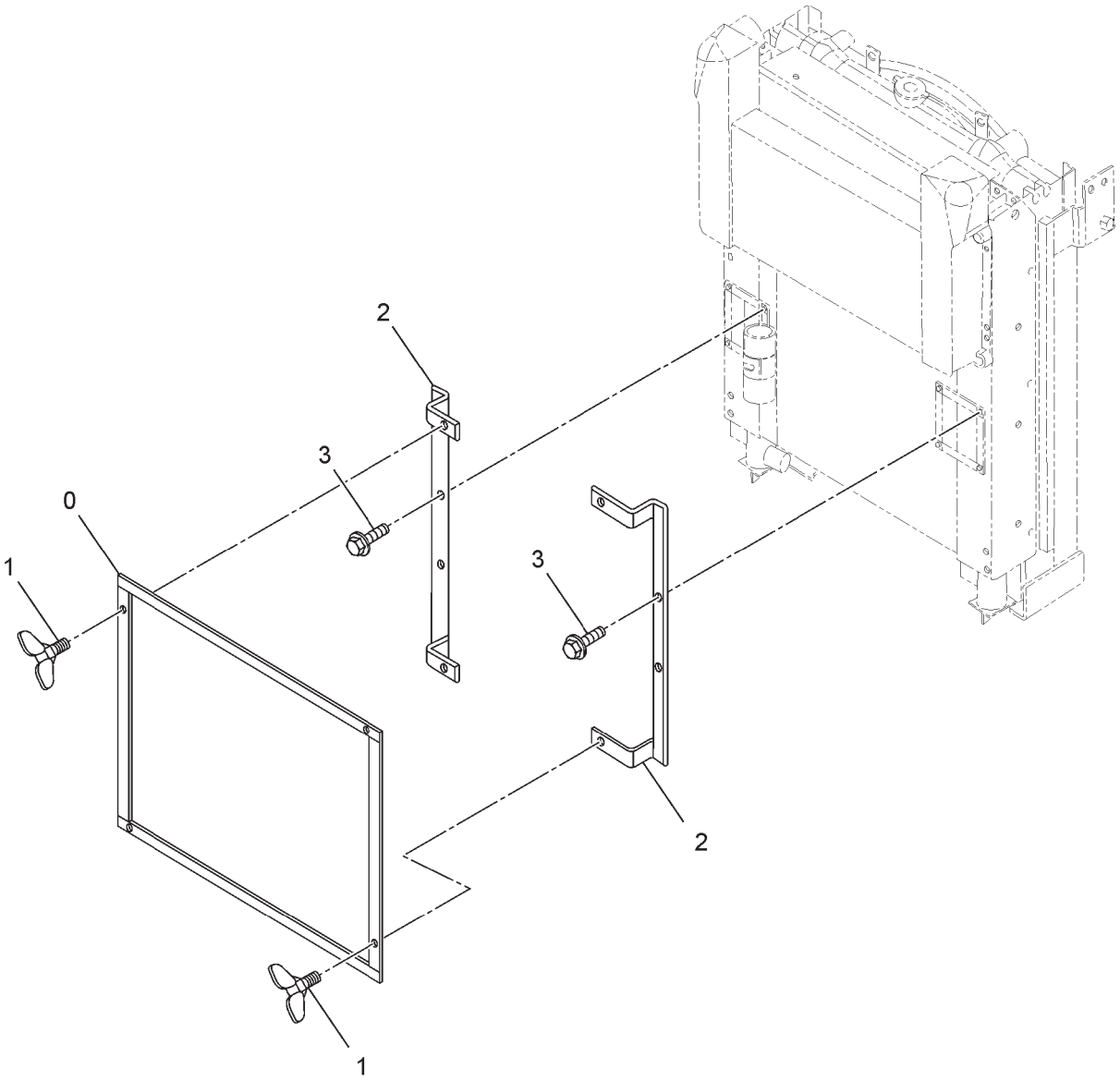

ITEM	PART NO.	PART NAME	QTY	S.C.	MACHINE SERIAL NO. ONWARDS	ICA	REPLACEABLE PART	
							PART NO.	QTY
0	8078936	NET	1		0ACH-000001			
1	M360614	BOLT;WING	4		0ACH-000001			
2	8078935	BRACKET	2		0ACH-000001			
3	J260825	BOLT; SEMS	4	D	0ACH-000001	T		

DUCT

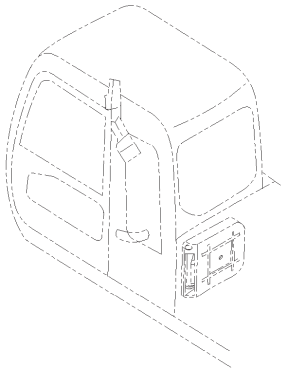

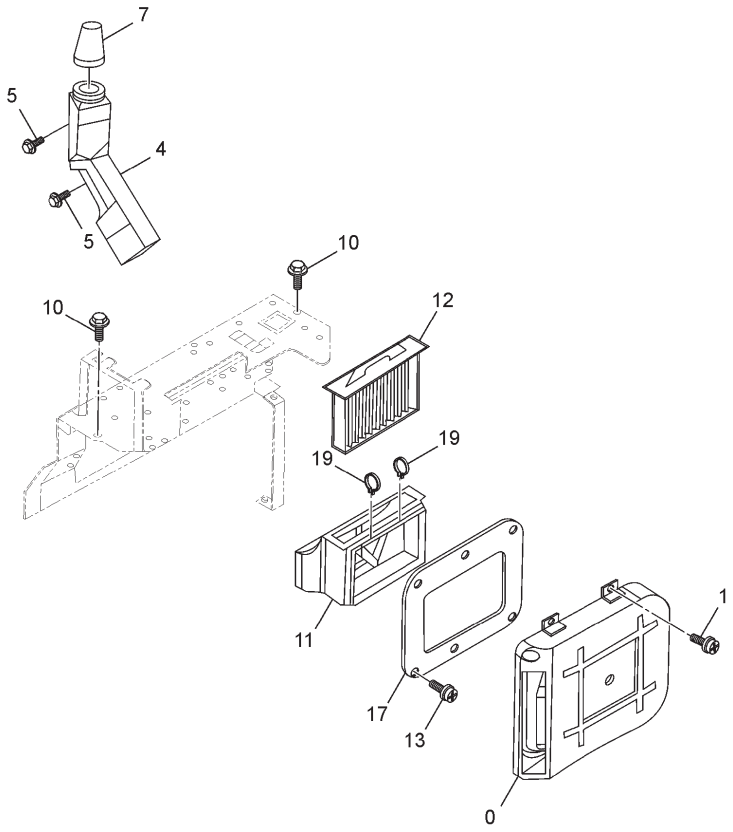

ITEM	PART NO.	PART NAME	QTY	S.C.	MACHINE SERIAL NO. ONWARDS	ICA	REPLACEABLE PART	
							PART NO.	QTY
--	**9184106**	**DUCT**	**--**					
0	4426160	DUCT	1		0ACH-000001			
1	J460616	SCREW;SEMS	6		0ACH-000001			
4	4426159	DUCT	1		0ACH-000001			
5	J460616	SCREW;SEMS	6		0ACH-000001			
7	4449068	DUCT	1		0ACH-000001			
10	J281025	BOLT; SEMS	2	D	0ACH-000001	T		
11	4426161	DUCT	1		0ACH-000001			
12	4350249	FILTER	1		0ACH-000001			
13	J460616	SCREW;SEMS	6		0ACH-000001			
17	4449348	DUCT	1		0ACH-000001			
19	4445916	CLIP	2		0ACH-000001			

HEATER PARTS

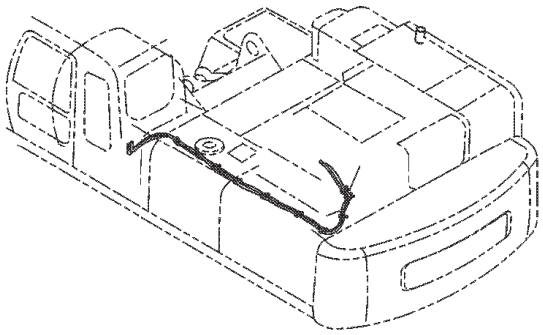

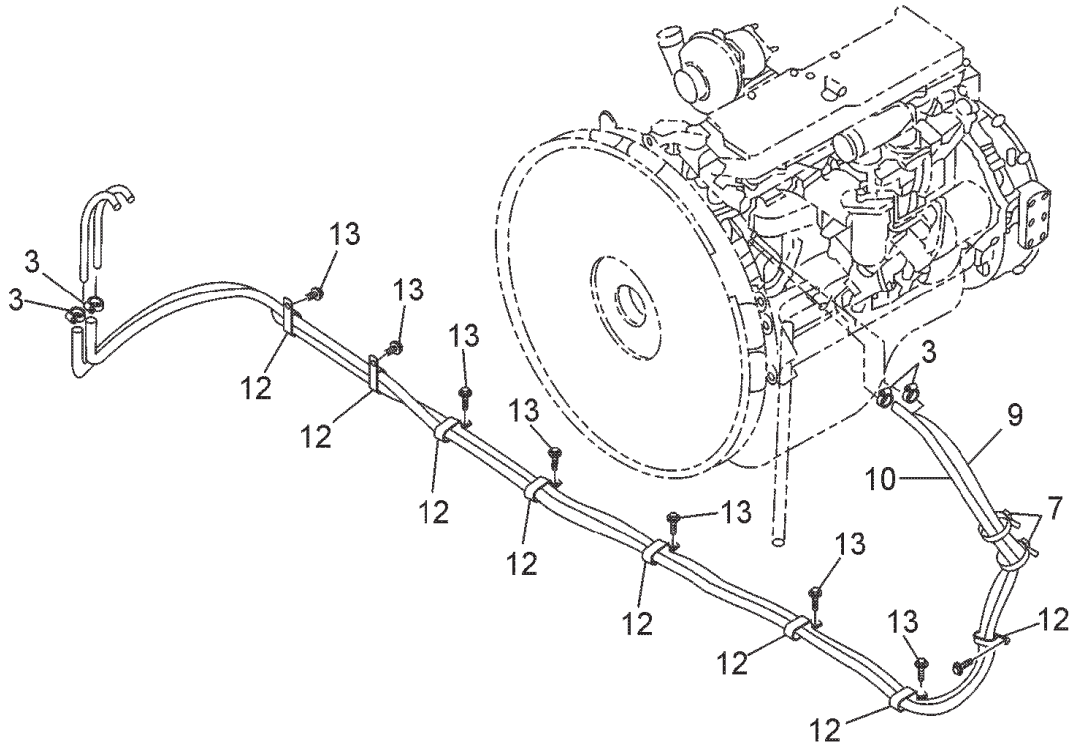

ITEM	PART NO.	PART NAME	QTY	S.C.	MACHINE SERIAL NO. ONWARDS	ICA	REPLACEABLE PART	
							PART NO.	QTY
--	**9191474**	**HEATER PARTS 2**	**--**					
3	4514699	CLAMP;HOSE	4		0ACH-000001			
7	4055312	CLIP;BAND	2		0ACH-000001			
9	4266930	HOSE	1		0ACH-000001			
10	4447625	HOSE	1		0ACH-000001			
12	4192034	CLIP	6		0ACH-000001			
13	J271020	BOLT; SEMS	6		0ACH-000001			

COUNTER WEIGHT

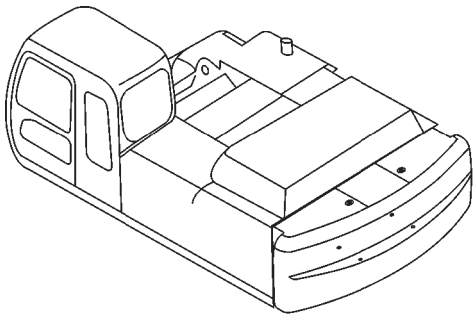

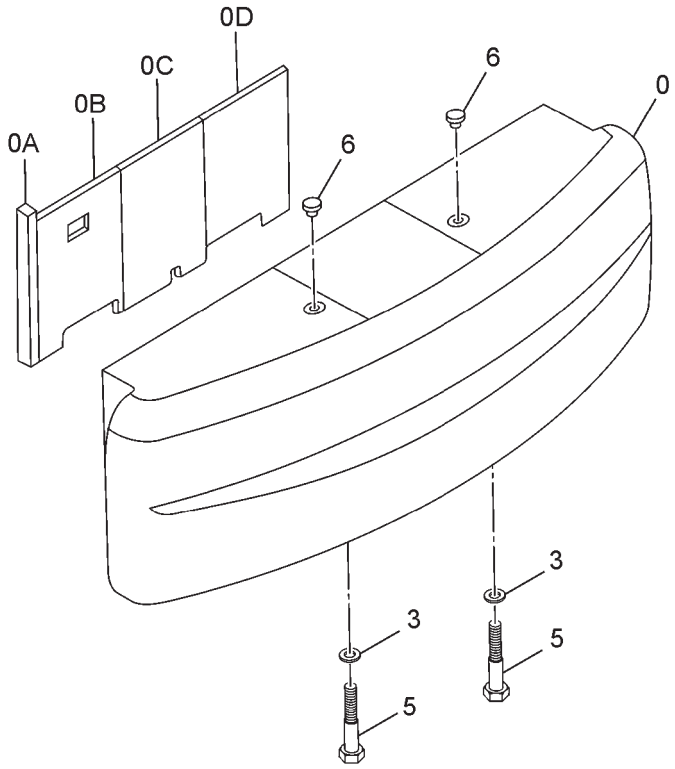

ITEM	PART NO.	PART NAME	QTY	S.C.	MACHINE SERIAL NO. ONWARDS	ICA	REPLACEABLE PART	
							PART NO.	QTY
--	**TE09526**	**COUNTER WEIGHT ASSY.**	**--**					
0	TA01033	WEIGHT;COUNTER	1		0ACH-000001			
0A	4438862	RUBBER	1		0ACH-000001			
0B	4438861	RUBBER	1		0ACH-000001			
0C	4438863	RUBBER	1		0ACH-000001			
0D	4438860	RUBBER	1		0ACH-000001			
3	4381407	WASHER;	4		0ACH-000001			
5	4472307	BOLT	4		0ACH-000001			
6	4168132	CAP	2		0ACH-000001			

BLANK

UNDER CARRIAGE PARTS

TRACK FRAME ASSY.

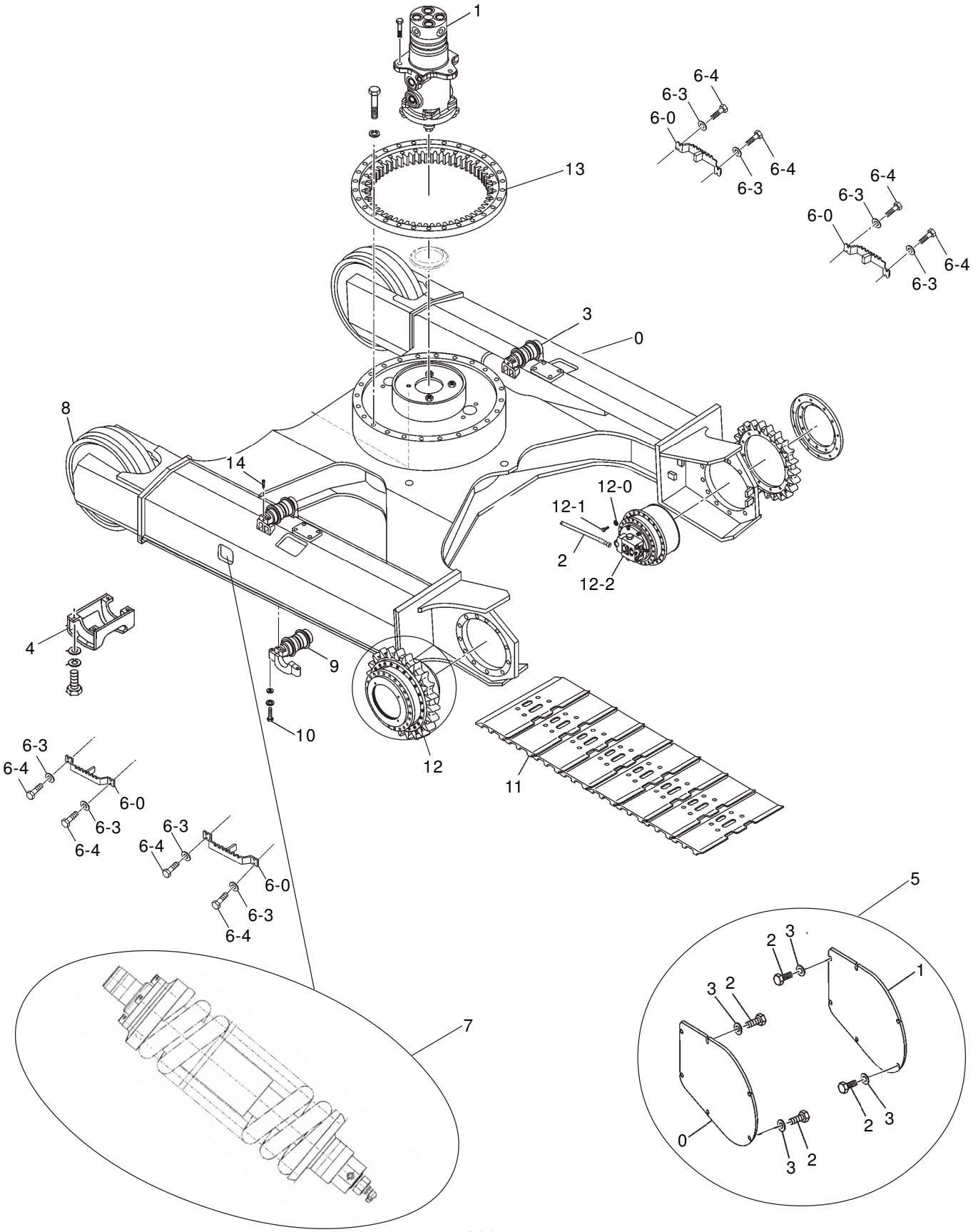

TRACK FRAME ASSY.

ITEM	PART NO.	PART NAME	QTY	S.C.	SERIAL NO.	ICA	REPLACEABLE PART	
							PART NO.	QTY
--	**TE09535**	**MACHINE LOWER ZX370 LCH**	**--**					
0	5010090	FRAME;TRACK	1		0ACH-000011			
1	9262068	PARTS; C/J	1		0ACH-000011			
2	9251178	PIPING;TRAVEL	1		0ACH-000011			
3	TC01878	CARRIER ROLLER ASSY	4		0ACH-000011			
4	9259782	GUARD	1		0ACH-000011			
5	9159758	COVER;MOTOR	2		0ACH-000011			
5-0	4380088	COVER (LH)	1		0ACH-000001			
5-1	TE10438	COVER (RH)	1		0ACH-000001			
5-2	J901435	BOLT	6		0ACH-000001			
5-3	J222014	WASHER	6		0ACH-000001			
6	9245172	STEP	1		0ACH-000011			
6-0	9763511	STEP	4		0ACH-000001			
6-3	J222016	WASHER	16		0ACH-000001			
6-4	J901640	BOLT	16		0ACH-000001			
7	9243535	TRACK ADJUSTER ASSY	2		0ACH-000011			
8	TC01880	FRONT IDLER WITH BKT AND YOKE	2		0ACH-000011			
9	TC01879	TRACK ROLLER ASSY	16		0ACH-000011			
10	4648103	BOLT	64		0ACH-000011			
11	TC01850	TRACK LINK ASSY	2		0ACH-000011			
12	9262069	PARTS;DEVICE;TRAVEL	1		0ACH-000011			
12-0	4018545	WASHER	40		0ACH-000001			
12-1	4272306	BOLT	40		0ACH-000001			
12-2	9232360	TRAVEL DEVICE ASSY.	2		0ACH-000001			
13	9204891	PARTS;SWING CIRCLE	1		0ACH-000011			
14	4647124	BOLT	16		0ACH-000001			

TRAVEL PIPING

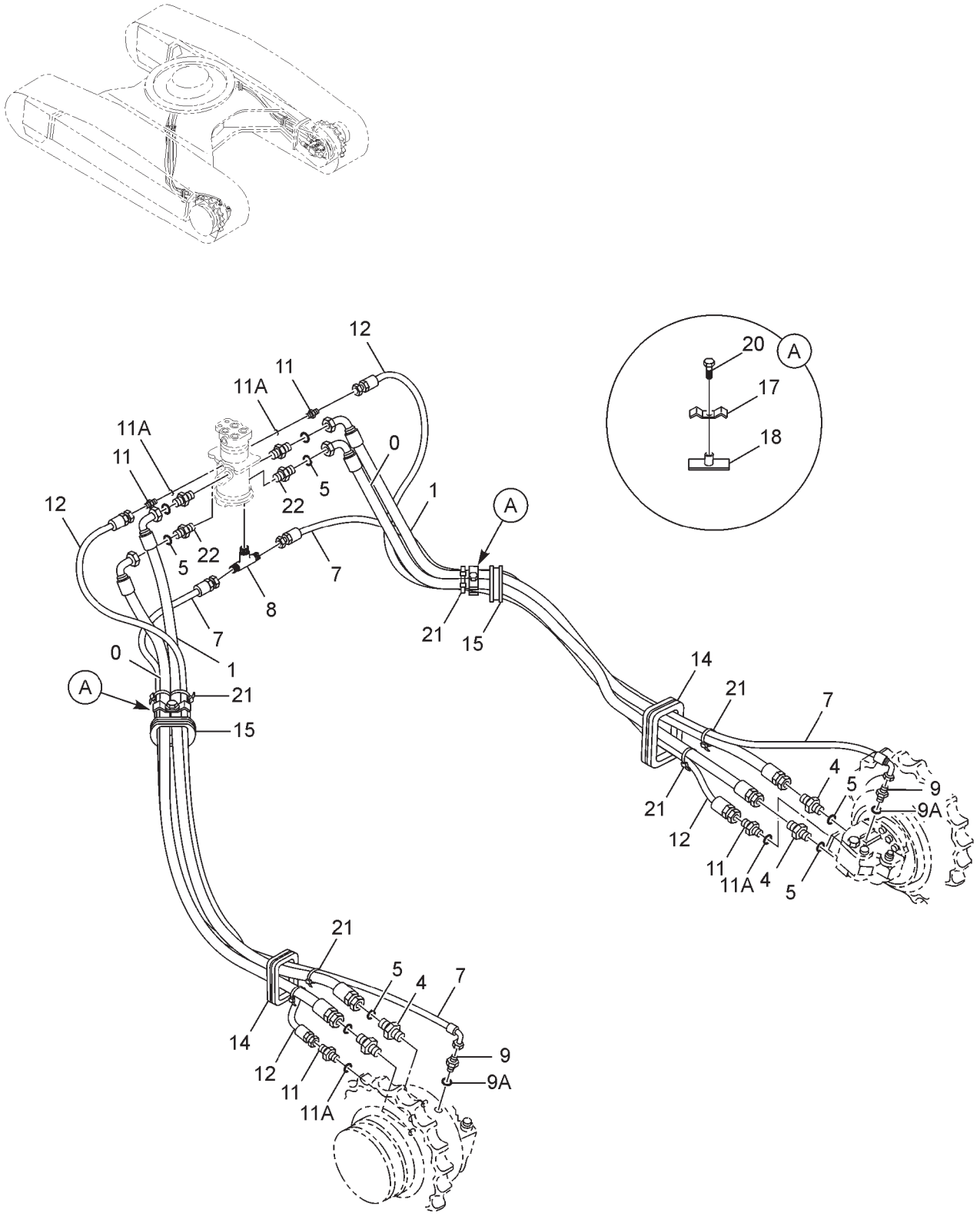

TRAVEL PIPING

ITEM	PART NO.	PART NAME	QTY	S.C.	MACHINE SERIAL NO. ONWARDS	ICA	REPLACEABLE PART	
							PART NO.	QTY
--	**9251178**	**PIPING TRAVEL**	**--**					
0	4635303	HOSE	2		0ACH-000001			
1	4635305	HOSE	2		0ACH-000001			
4	A853188	ADAPTER;S	4		0ACH-000001			
4A	4506429	O-RING	1		0ACH-000001			
5	4187328	O-RING	8		0ACH-000001			
7	4459641	HOSE;PLASTIC	2		0ACH-000001			
8	A852544	TEE;S	1		0ACH-000001			
8A	4506418	O-RING	1		0ACH-000001			
9	A852144	ADAPTER;S	2		0ACH-000001			
9A	4506418	O-RING	1		0ACH-000001			
11	A852122	ADAPTER;S	4		0ACH-000001			
11A	Z957366	O-RING	1		0ACH-000001			
12	4429283	HOSE;PLASTIC	2		0ACH-000001			
14	4627953	BUSHING;RUBBER	2		0ACH-000001			
15	4272436	BUSHING;RUBBER	2		0ACH-000001			
17	4202103	CLAMP	2		0ACH-000001			
18	9736782	CLAMP	2		0ACH-000001			
20	J901265	BOLT	2		0ACH-000001			
21	4121859	CLIP;BAND	8		0ACH-000001			
22	4189601	ADAPTER;S	4		0ACH-000001			
22A	4506424	O-RING	1		0ACH-000001			
23	4203163	TEE; S	1		0ACH-000001			
24	TE04684	ADAPTER	1		0ACH-000001			
25	Z957366	O-RING	1		0ACH-000001			

TRACK GUARD

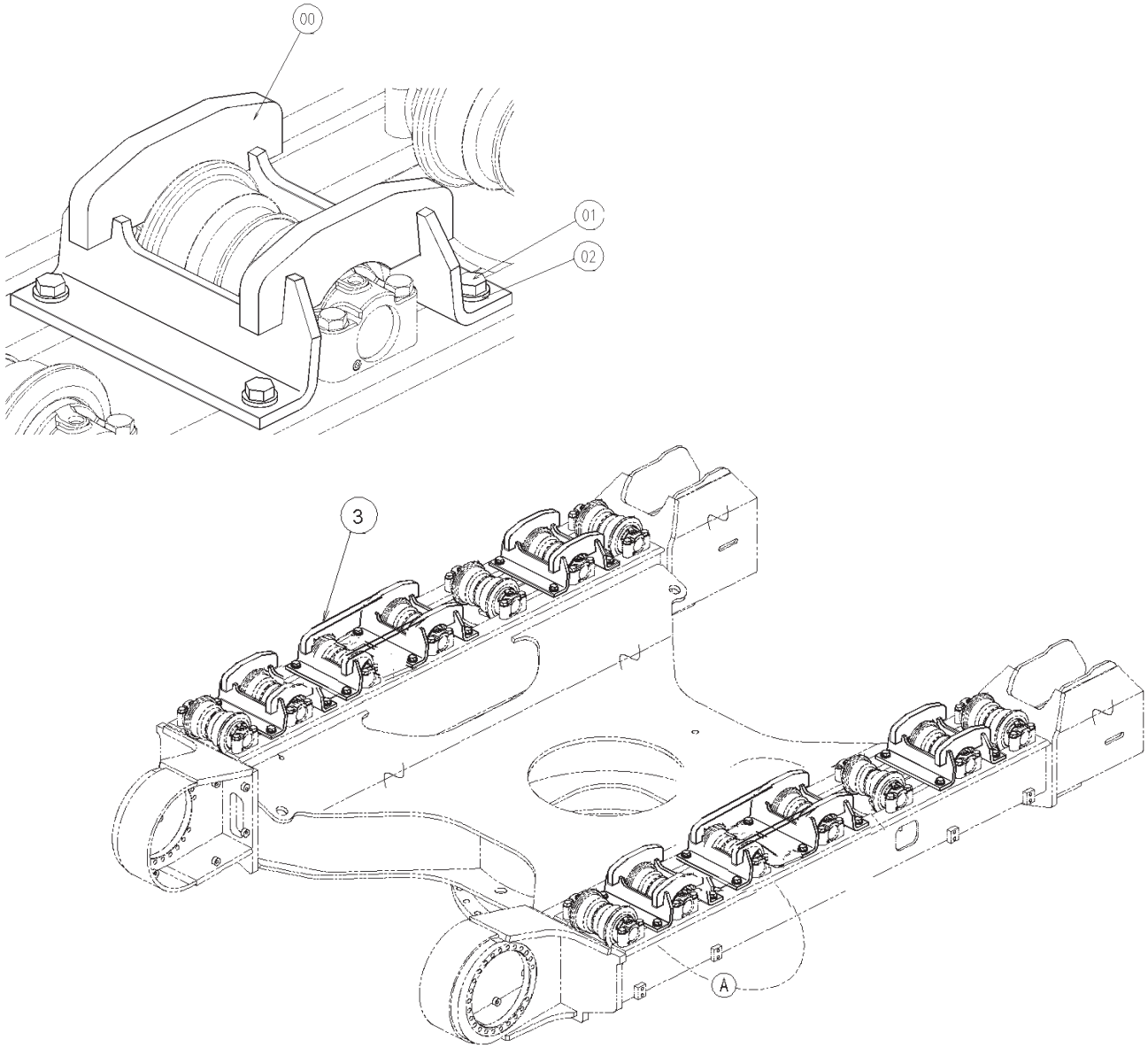

ITEM	PART NO.	PART NAME	QTY	S.C.	MACHINE SERIAL NO. ONWARDS	ICA	REPLACEABLE PART	
							PART NO.	QTY
--	**9259782**	**TRACK GUARD**	**4**					
00	8103642	GUARD	4					
01	J932255	BOLT	28					
02	4089822	WASHER	28					
03	TD06516	TRACK GUARD (LONG)	2					

TRACK GUARD (FULL LENGTH)

FRONT

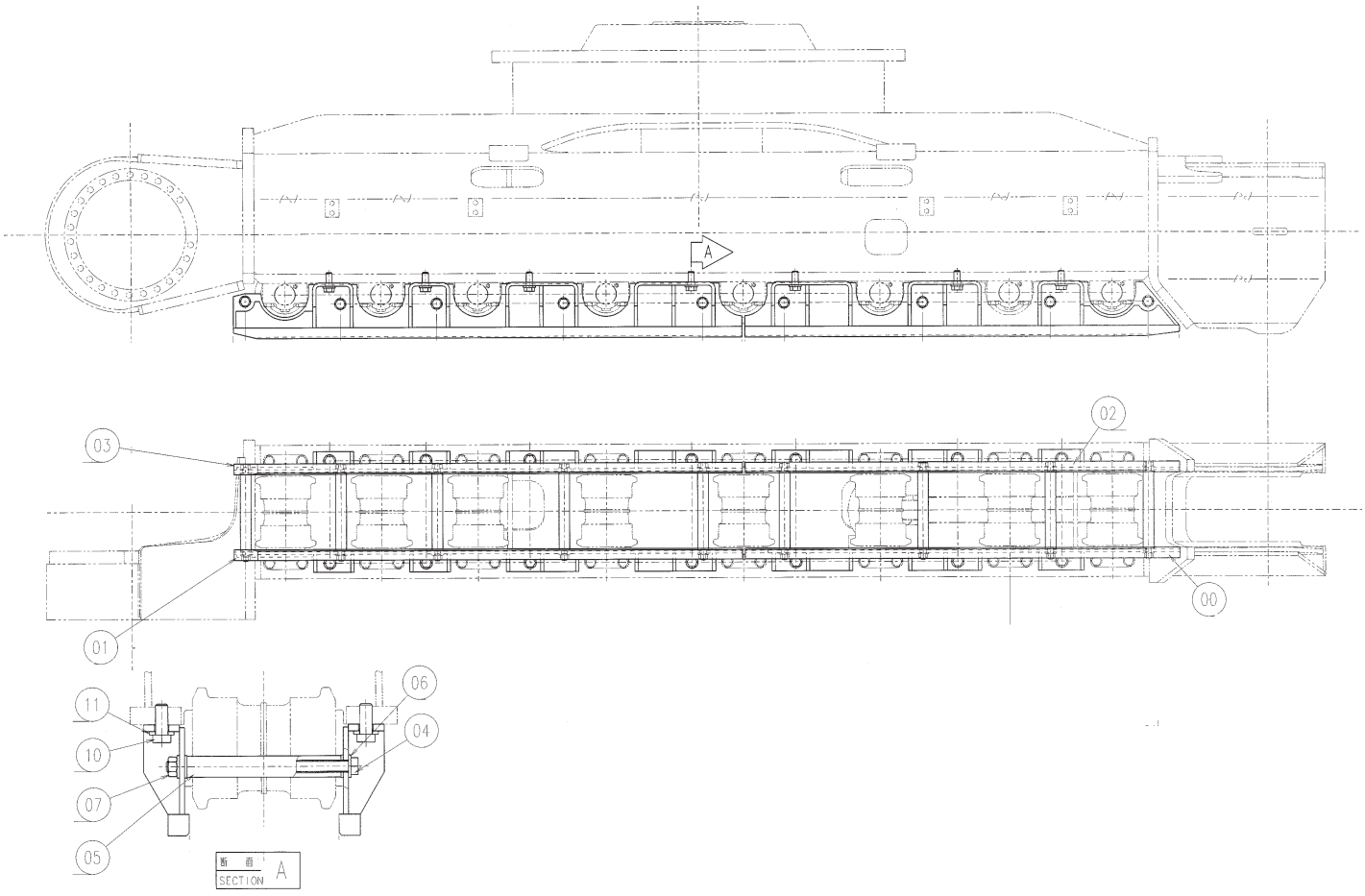

ITEM	PART NO.	PART NAME	QTY	S.C.	MACHINE SERIAL NO. ONWARDS	ICA	REPLACEABLE PART	
							PART NO.	QTY
--	**9250292**	**ASSY GUARD FULL LENGTH**	**--**					
0	7048373	GUARD;FL	2		0ACG-000001			
1	7048377	GUARD;RL	2		0ACG-000001			
2	7048375	GUARD;FR	2		0ACG-000001			
3	7048378	GUARD;RR	2		0ACG-000001			
4	4317621	BOLT	18		0ACG-000001			
5	4319274	SPACER	18		0ACG-000001			
6	4018545	WASHER	72		0ACG-000001			
7	J951020	NUT	18		0ACG-000001			
10	J932255	BOLT	28		0ACG-000001			
11	4089822	WASHER	28		0ACG-000001			

TRACK ADJUSTER ASSY.

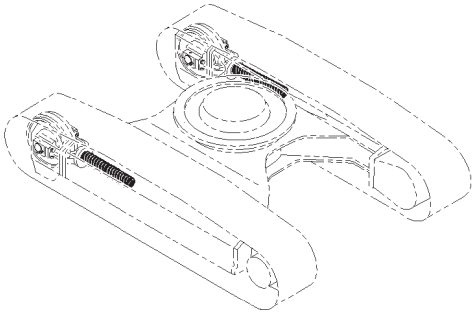

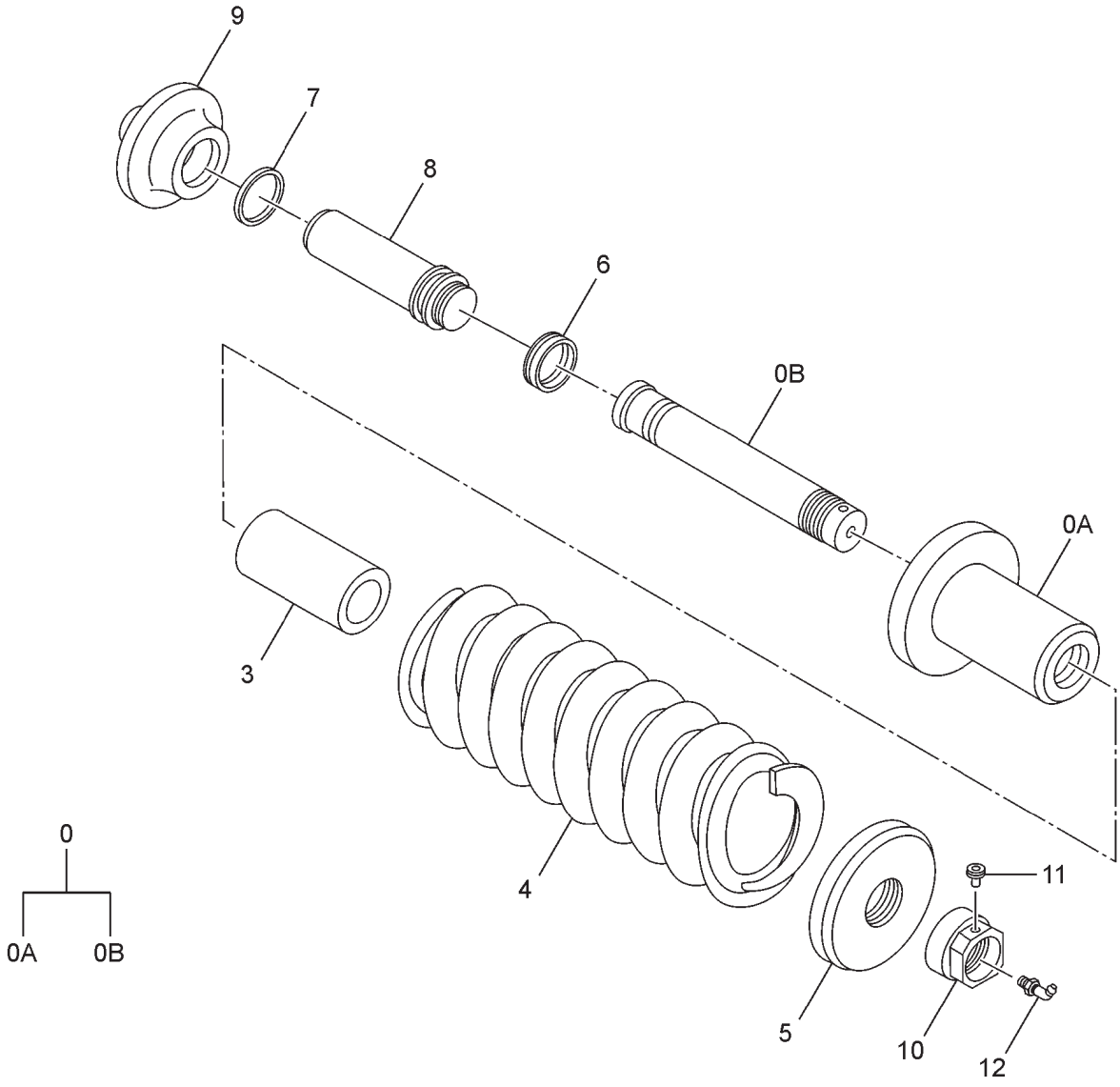

TRACK ADJUSTER ASSY.

ITEM	PART NO.	PART NAME	QTY	S.C.	MACHINE SERIAL NO. ONWARDS	ICA	REPLACEABLE PART	
							PART NO.	QTY
--	**9243535**	**TRACK ADJUSTER ASSY.**	**--**					
0	9243509	CYLINDER ASSY	1		0ACH-000001			
0A	2051759	CYLINDER	1		0ACH-000001			
0B	3103229	ROD	1		0ACH-000001			
3	4625670	SPACER	1		0ACH-000001			
4	YA00020678	SPRING	1		0ACH-000001			
5	3103191	WASHER	1		0ACH-000001			
6	4625912	PACKING;U-RING	1		0ACH-000001			
7	4625911	SEAL;DUST	1		0ACH-000001			
8	3103242	ROD;PISTON	1		0ACH-000001			
9	3103254	HOLDER	1		0ACH-000001			
10	3103252	NUT	1		0ACH-000001			
11	4248106	PLUG	1		0ACH-000001			
12	4255055	VALVE	1		0ACH-000001			

CENTRE JOINT ASSY. WITH PARTS

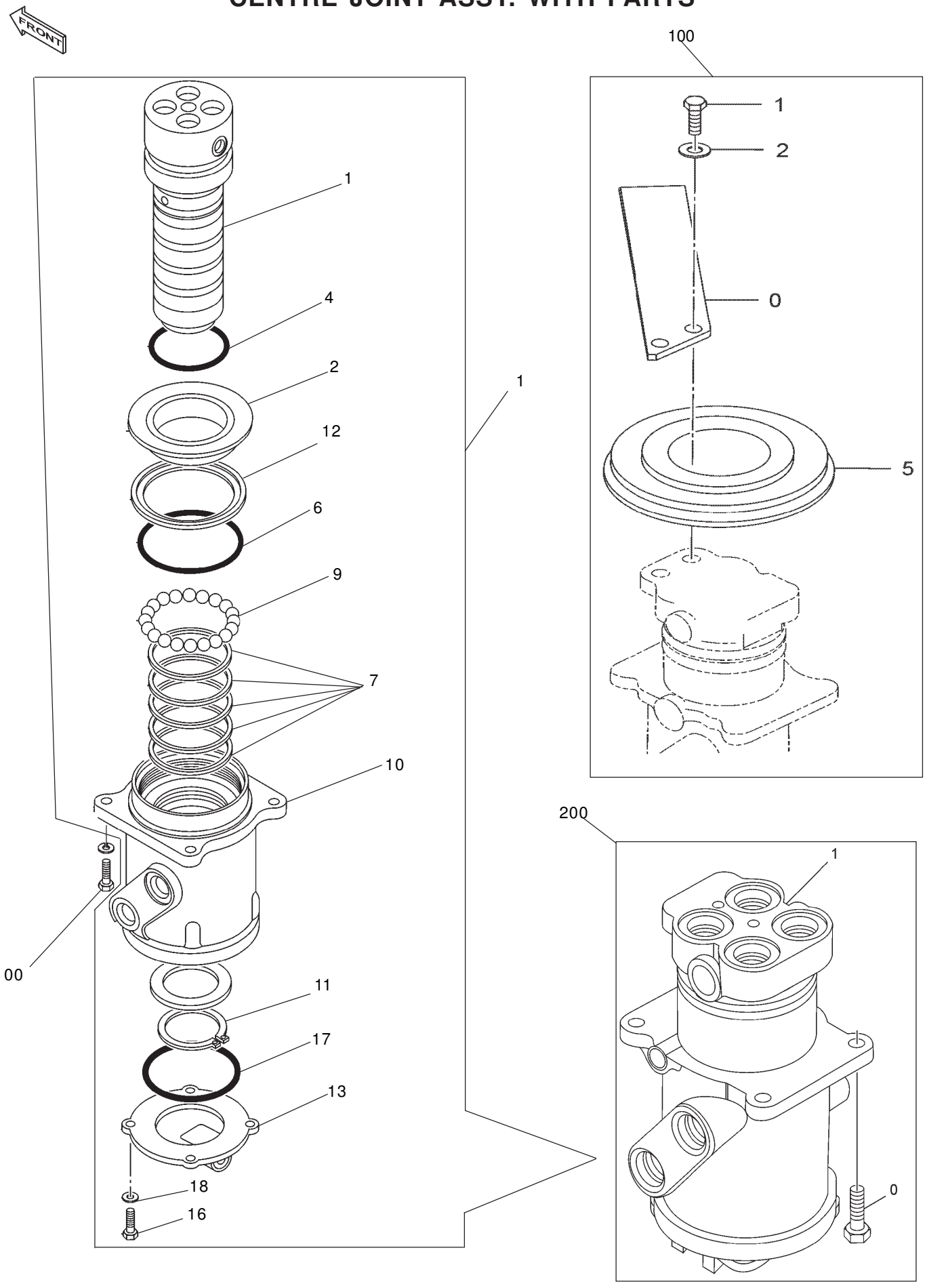

CENTRE JOINT ASSY. WITH PARTS

ITEM	PART NO.	PART NAME	QTY	S.C.	SERIAL NO.	ICA	REPLACEABLE PART	
							PART NO.	QTY
--	**9262068**	**PARTS CENTER JOINT**	**--**					
00	J011235	BOLT; SEMS	4					
01	TB00842	JOINT; CENTER *	--					
1-0	TB00841	BODY	1		2001-9168			
1-1	TB00840	SPINDLE	1		2001-9168			
1-2	4187060	COVER	1		2001-9168			
1-4	A810095	O-RING	1		2001-9168			
1-6	4176479	O-RING	1		2001-9168			
1-7	4231542	SEAL; OIL	5		2001-9168			
1-7	4176480	SEAL; OIL	5		2001-9168			
1-9	Z972658	BALL	20		2001-9168			
1-10	4176429	RING D110	1		2001-9168			
1-11	Z991349	RING RETAINING	1		2001-9168			
1-12	4195898	SEAL DUST	1		2001-9168			
1-13	TC01099	COVER;CENTER JOINT	1		2001-9168			
1-16	J011030	BOLT; SEMS	4		2001-9168			
1-17	A810120	O-RING	1		2001-9168			
1-18	A590910	SPR.WASHER	1		2001-9168			
100	**TC01586**	**PARTS CENTER JOINT**	**--**					
100-0	4274282	STOPPER	1		0ACH-000001			
100-1	J901435	BOLT	2		0ACH-000001			
100-2	A590914	WASHER;SPRING	2		0ACH-000001			
100-5	4428007	COVER BOOT	1		0ACH-000001			
200	**9262068**	**PARTS CENTRE JOINT**	**--**					
200-0	J011235	BOLT; SEMS	4		0ACH-000036			
200-1	TB00842	CENTER;JOINT	1		0ACH-000001			

TRAVEL DEVICE

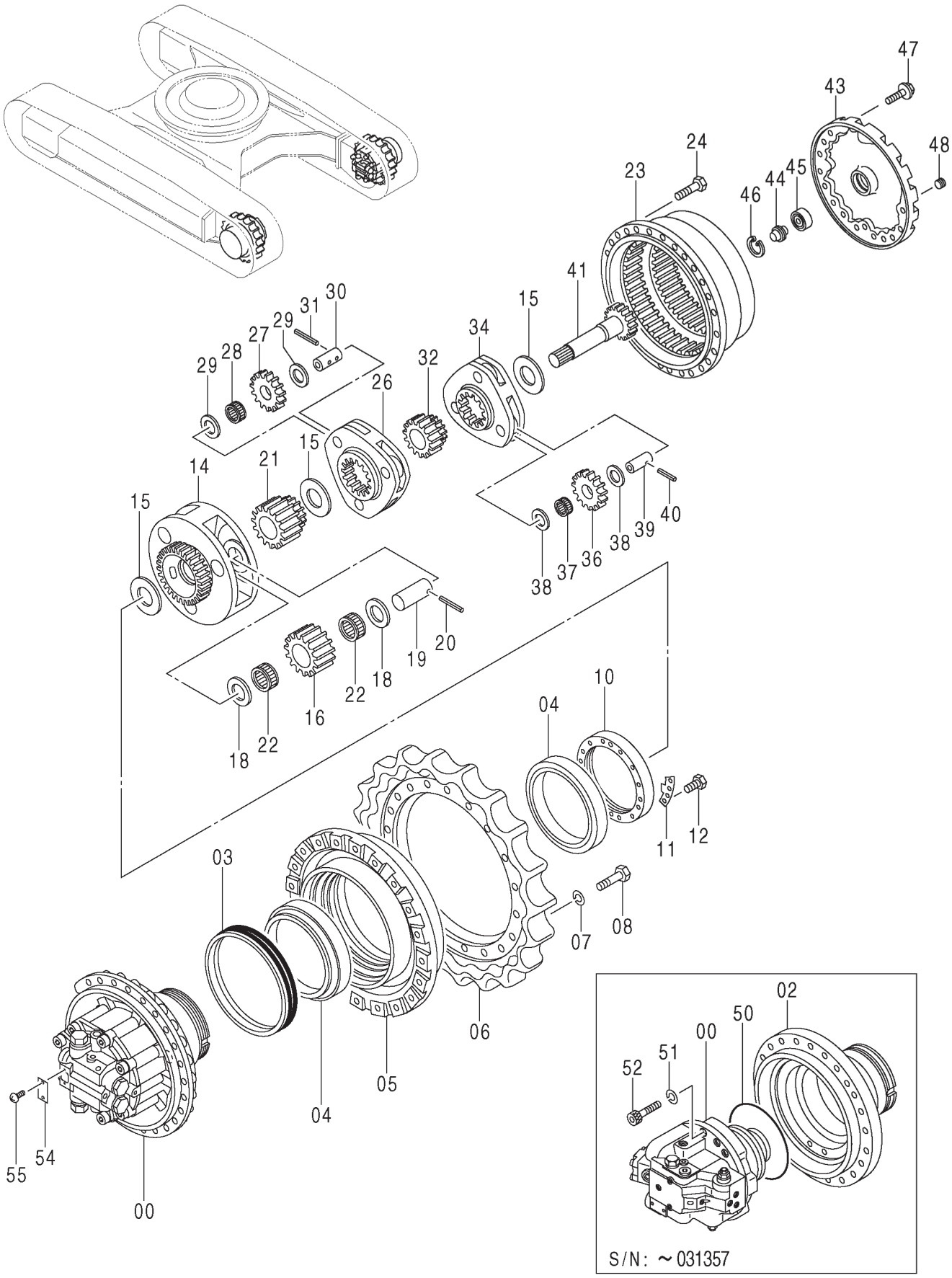

TRAVEL DEVICE

ITEM	PART NO.	PART NAME	QTY	S.C.	MACHINE SERIAL NO. ONWARDS	ICA	REPLACEABLE PART	
							PART NO.	QTY
--	**9232360**	**TRAVEL DEVICE**	**2**	**S**				
00	9231673	MOTOR; OIL	1	S				
02	1022194	HOUSING	1					
03	4066695	SEAL; GROUP	1					
04	4192975	BRG. ROL.	2					
05	1022179	DRUM	1					
06	1022168	SPROCKET	1					
07	A590920	WASHER; SPRING	20					
08	J932060	BOLT	20					
10	3094717	NUT	1					
11	4470326	PLATE LOCK	1					
12	J901225	BOLT	2					
14	1022198	CARRIER	1					
15	4401293	SPACER	3					
16	3075003	GEAR; PLANETARY	3					
18	4269470	PLATE; THRUST	6					
19	4269452	PIN	3					
20	4192021	PIN; SPRING	3					
21	3075005	GEAR; SUN	1					
22	4455088	BRG.; NEEDLE	6					
23	1022195	GEAR; RING	1					
24	J931640	BOLT	28					
26	1022197	CARRIER	1					
27	3075002	GEAR; PLANETARY	3					
28	4455099	BRG.; NEEDLE	3					
29	4284521	PLATE; THRUST	6					
30	4269451	PIN	3					
31	4197763	PIN; SPRING	3					
32	3074989	GEAR; SUN	1					
34	1022196	CARRIER	1					
36	3075001	GEAR; PLANETARY	3					
37	4455098	BRG.; NEEDLE	3					
38	4284520	PLATE; THRUST	6					
39	4269472	PIN	3					
40	4192020	PIN SPRING	3					
41	2038915	SHAFT; PROP.	1					
41	2048000	SHAFT; PROP.	1					
43	2045031	COVER	1					
44	4277474	PIN; STOPPER	1					
45	4278168	BRG.; BALL	1					
46	930451	RING; RETAINING	1					
47	4609016	BOLT; SEMS	16					
48	4245797	PLUG	3					
50	4269473	O-RING	1					
51	4287213	WASHER; SPRING	4					
52	M341885	BOLT; SOCKET	4					
54	3053559	NAME–PLATE	1					
55	M492564	SCREW; DRIVE	2					

MOTOR; OIL (TRAVEL)

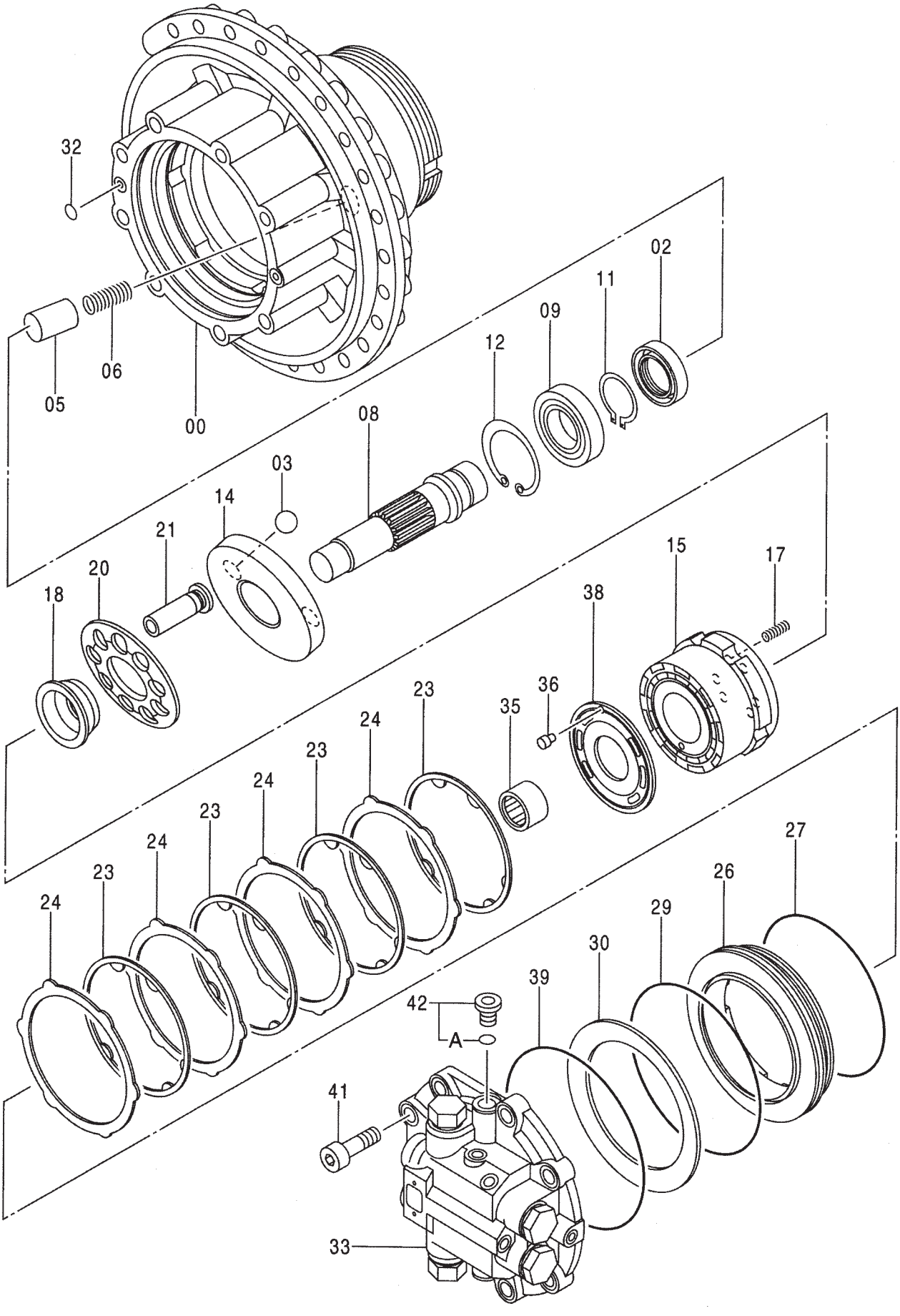

MOTOR; OIL (TRAVEL)

ITEM	PART NO.	PART NAME	QTY	S.C.	MACHINE SERIAL NO. ONWARDS	ICA	REPLACEABLE PART	
							PART NO.	QTY
--	**9231673**	**MOTOR; OIL**	**1**	**S**				
00	0004501	HOUSING	1					
02	4396696	SEAL; OIL	1					
03	4355728	BALL	2					
05	4462038	PISTON	1					
06	4475147	SPRING; COMPRES.	1					
08	2047884	SHAFT	1					
09	4396755	BRG. ROL.	1					
11	991345	RING; RETAINING	1					
12	959501	RING; RETAINING	1					
14	3094361	PLATE; SWASH	1					
15	2047885	ROTOR	1					
17	4468258	SPRING; COMPRES	6					
18	4627480	BUSHING	1	#				
20	3103491	RETAINER	1	#				
21	8092512	PISTON	9					
23	3096779	PLATE; FRICTION	4					
24	3094376	PLATE	4					
26	3094377	PISTON	1					
27	4468248	O-RING	1					
29	4468249	O-RING	1					
30	4468250	SPRING; DISC	1					
32	4506415	O-RING	2					
33	9229962	VALVE; BRAKE	1	S				
35	4472355	BRG.; NEEDLE	1					
36	4461910	PIN; KNOCK	1					
38	3103022	PLATE; VALVE	1	#				
39	4468244	O-RING	1					
41	M342056	BOLT; SOCKET	8					
42	9134112	PLUG	1					
42A	4506418	O-RING	1					

SWING BEARING PARTS

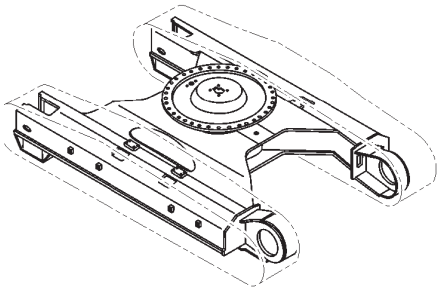

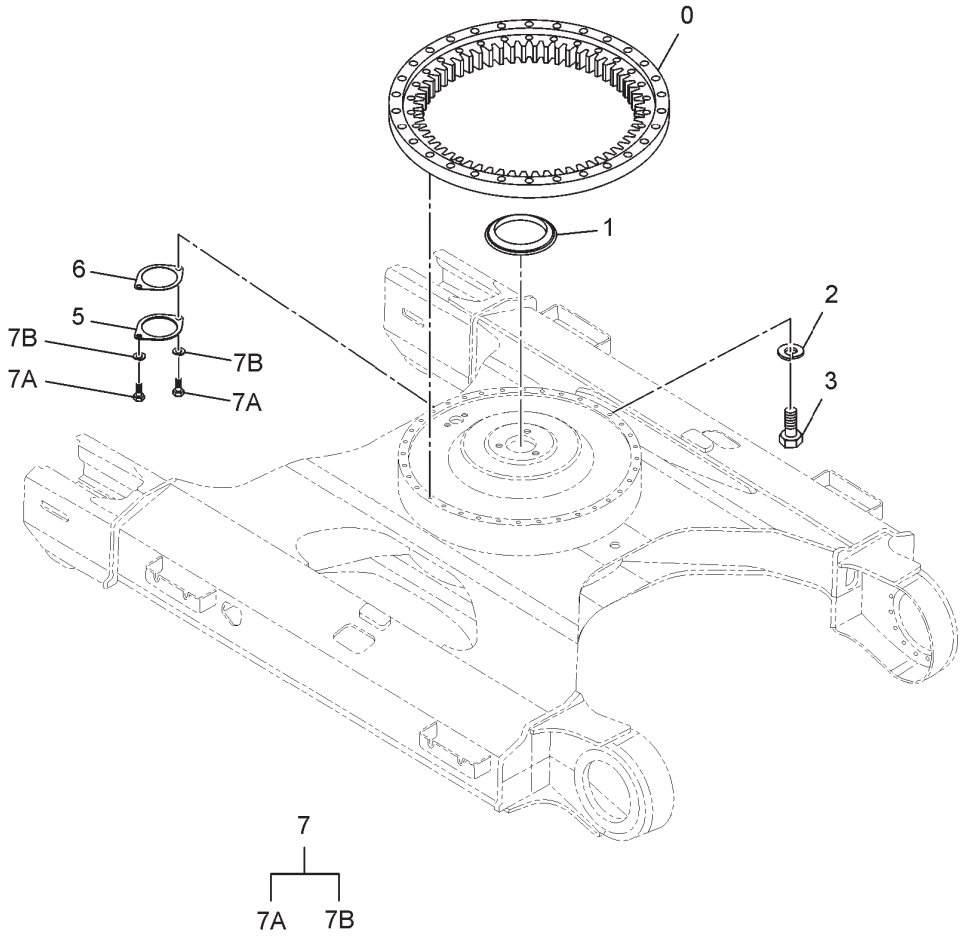

ITEM	PART NO.	PART NAME	QTY	S.C.	MACHINE SERIAL NO. ONWARDS	ICA	REPLACEABLE PART	
							PART NO.	QTY
--	**9204891**	**SWING CIRCLE PARTS**	**--**					
0	9169894	SLEW CIRCLE RING	1		0ACH-000001			
1	9229187	SEAL	1		0ACH-000001			
2	J257227	WASHER; SPRING	36		0ACH-000001			
3	4383972	BOLT	36		0ACH-000001			
5	4128863	PLATE	1		0ACH-000001			
6	4272297	PACKING	1		0ACH-000001			
7	J271025	BOLT; SEMS	2	D	0ACH-000001	T		

SLEW CIRCLE RING

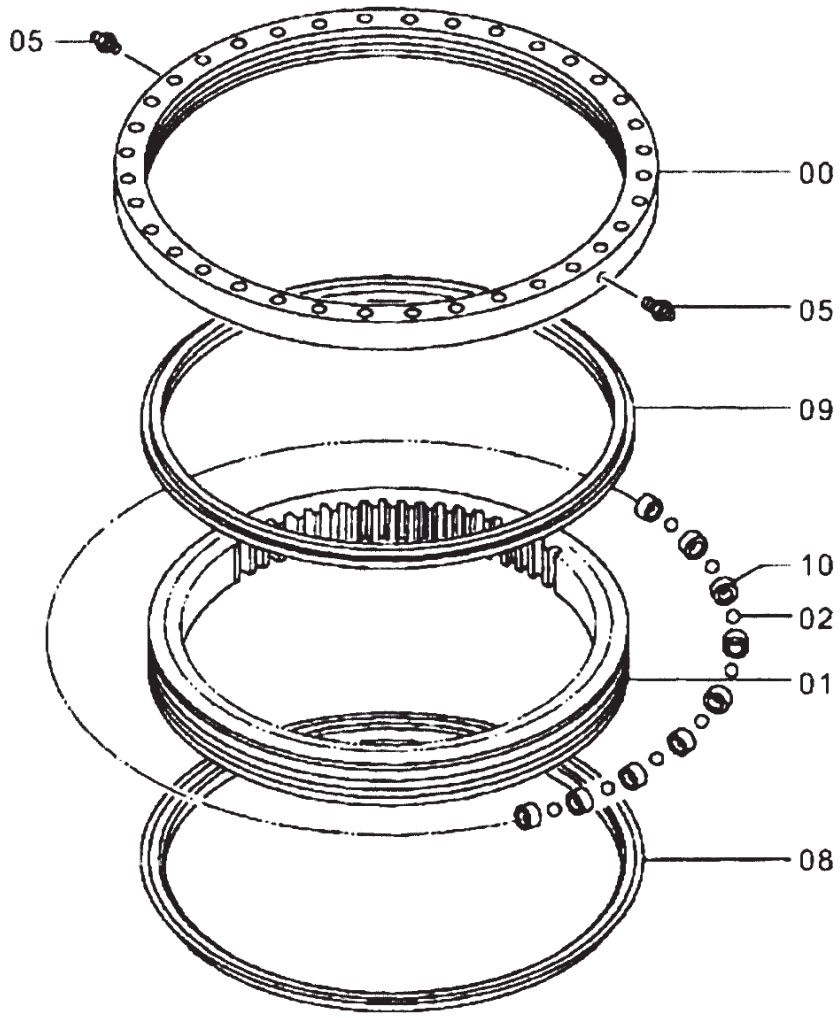

ITEM	PART NO.	PART NAME	QTY	S.C.	MACHINE SERIAL NO. ONWARDS	ICA	REPLACEABLE PART	
							PART NO.	QTY
00-10	**9169894**	**SLEW CIRCLE RING**	**1**					
00	+++++++	* RACE;OUTER	1	D				
01	+++++++	* RACE;INNER	1	D				
02	4382742	* BALL	95					
05	J75481	* FITTING;GREASE	2					
08	4633532	* SEAL	1					
08	4634010	* SEAL	1	S				
09	4633698	* SEAL	1					
09	4634010	* SEAL	1	S				
10	4382739	* SUPPORT	95					

TRACK LINK ASSY.

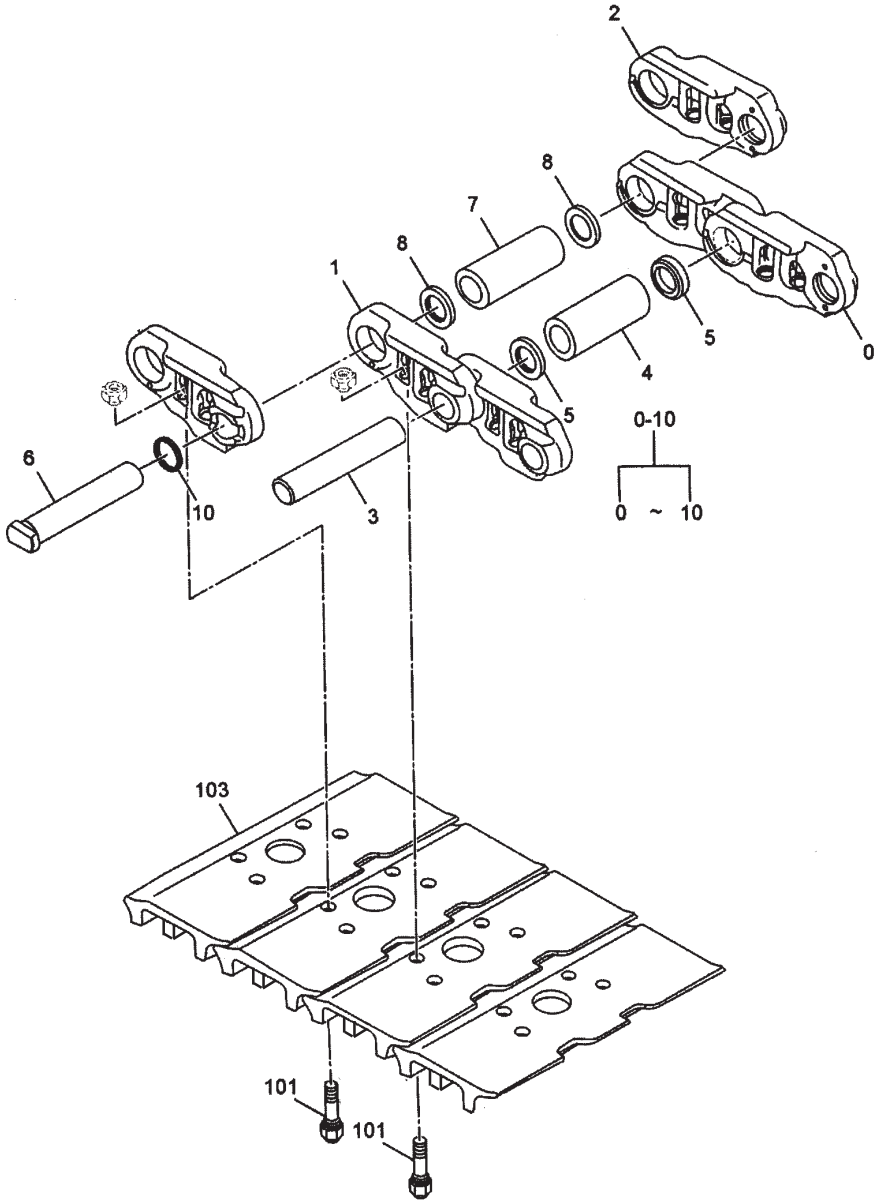

ITEM	PART NO.	PART NAME	QTY	S.C.	MACHINE SERIAL NO. ONWARDS	ICA	REPLACEABLE PART	
							PART NO.	QTY
--	**9258853**	**TRACK LINK ASSY.**	**--**					
0-10	9251026	TRACK-LINK ASSY	1		0ACH-000001			
0	0005253	TRACK-LINK; R	47		0ACH-000001			
1	0005254	TRACK-LINK; L	48		0ACH-000001			
2	4632763	TRACK-LINK; M	1		0ACH-000001			
3	4378891	PIN	47		0ACH-000001			
4	3077929	BUSHING	48		0ACH-000001			
5	4378892	SEAL; DUST	94		0ACH-000001			
6	3077929	PIN; MASTER	1		0ACH-000001			
7	3077930	BUSHING; MASTER	1		0ACH-000001			
8	4378893	COLLAR	2		0ACH-000001			
10	4649624	RING	1		0ACH-000001			
101	3104216	BOLT; SHOE	192		0ACH-000001			
102	2041971	SHOE; GROUSER	48		0ACH-000001			

TRACK LINK ASSY.

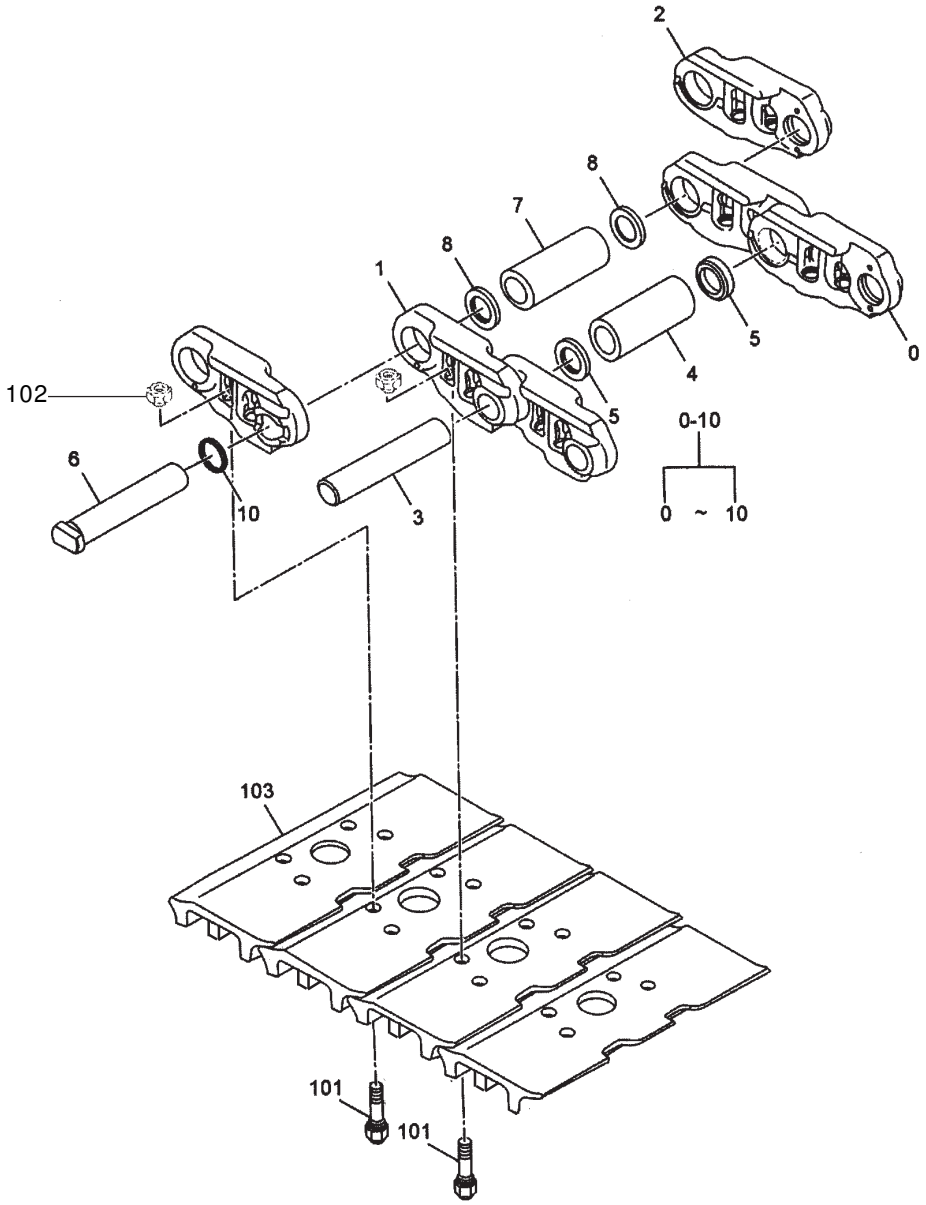

ITEM	PART NO.	PART NAME	QTY	S.C.	MACHINE SERIAL NO. ONWARDS	ICA	REPLACEABLE PART	
							PART NO.	QTY
0-10	**TC01850**	**TRACK-LINK ASSY.**	**1**		**0ACH-000001**			
0	TC01850/1	TRACK-LINK RH	48		0ACH-000001			
1	TC01850/2	TRACK-LINK LH	48		0ACH-000001			
3	TC01850/3	PIN	47		0ACH-000001			
4	TC01850/4	BUSHING	47		0ACH-000001			
5	TC01850/8	SEAL; DUST	94		0ACH-000001			
6	TC01850/5	PIN; MASTER	1		0ACH-000001			
7	TC01850/6	BUSHING; MASTER	1		0ACH-000001			
8	TC01852/7	SPACER	2		0ACH-000001			
10	4649624	RING	1		0ACH-000001			
101	TC01850/15	BOLT SHOE	192		0ACH-000001			
102	TC01852/16	NUT	192		0ACH-000001			
103	TC01850/9	TRIPPLE GROUSER SHOES	48		0ACH-000001			

UPPER ROLLER

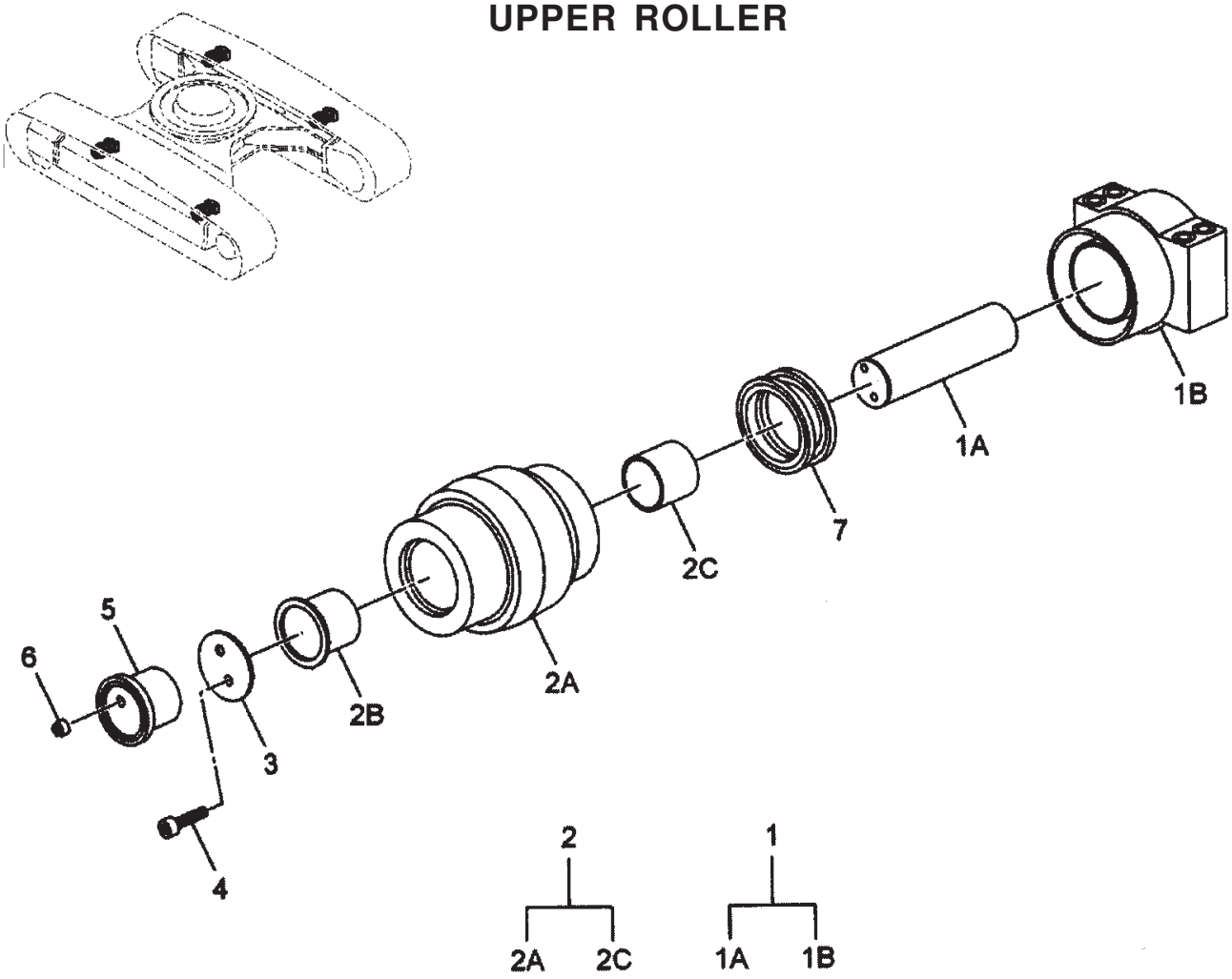

ITEM	PART NO.	PART NAME	QTY	S.C.	MACHINE SERIAL NO. ONWARDS	ICA	REPLACEABLE PART	
							PART NO.	QTY
--	**9245117**	**UPPER ROLLER**	--					
1	9245119	BRACKET	1		0ACH-000001			
1A	3103617	SHAFT	1		0ACH-000001			
1B	2053014	BRACKET	1		0ACH-000001			
2	9245118	ROLLER	1		0ACH-000001			
2A	2051920	ROLLER	1		0ACH-000001			
2B	3103618	BUSHING	1		0ACH-000001			
2C	3103619	BUSHING	1		0ACH-000001			
3	4628511	WASHER	1		0ACH-000001			
4	W351225	BOLT; SOCKET	2		0ACH-000001			
5	3103620	COVER	1		0ACH-000001			
6	4315607	PLUG	1		0ACH-000001			
7	4479926	SEAL; GROUP	1		0ACH-000001			

UPPER ROLLER ASSY.

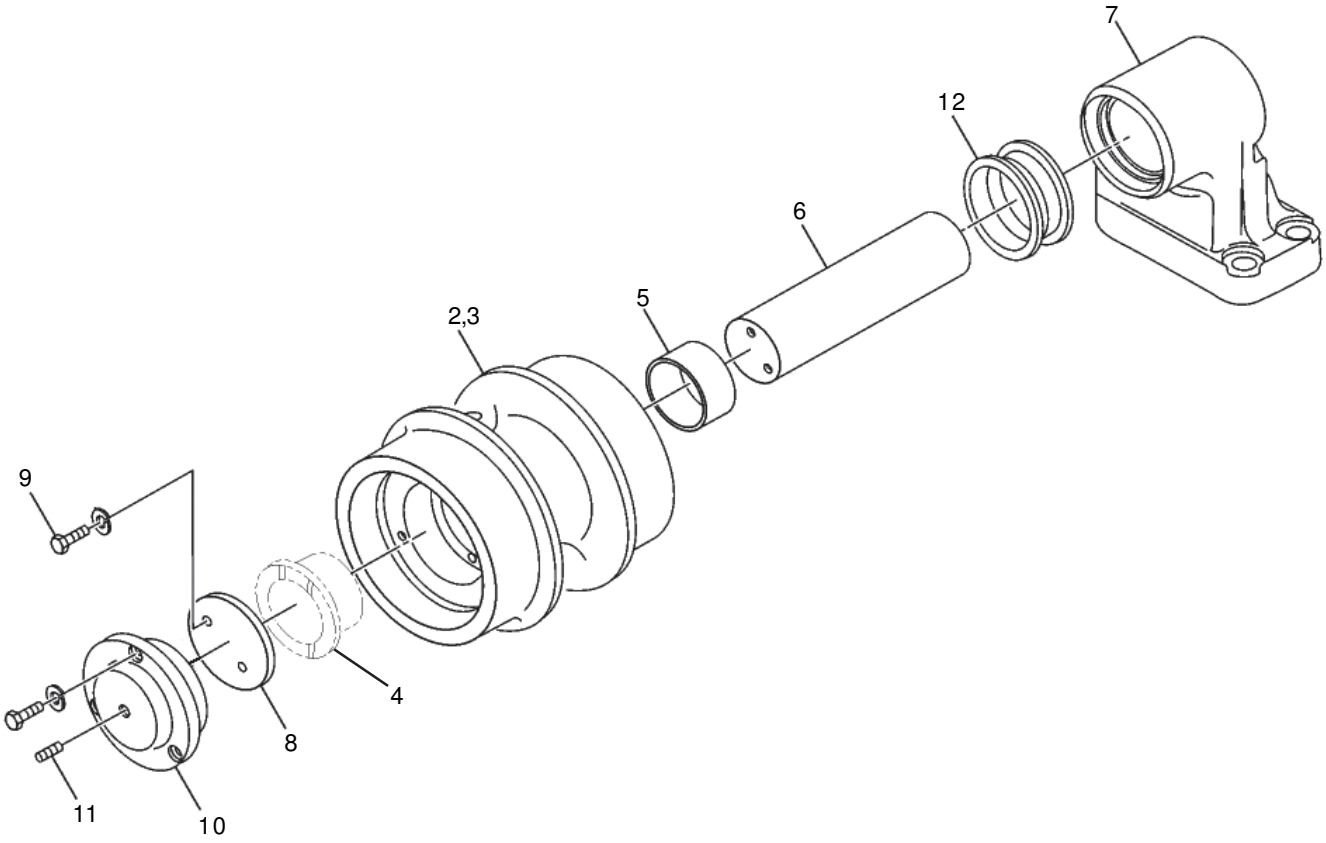

ITEM	PART NO.	PART NAME	QTY	S.C.	MACHINE SERIAL NO. ONWARDS	ICA	REPLACEABLE PART	
							PART NO.	QTY
--	**TC01878**	**CARRIER ROLLER ASS'Y**	**4**					
2	TC01878/2	ROLLER SHELL WITH BUSHINGS	1					
3	TC01878/3	ROLLER SHELL	1					
4	TC01878/4	BUSHING	1					
5	TC01878/5	BUSHING	1					
6	TC01878/6	SHAFT	1					
7	TC01878/7	BRACKET	1					
8	TC01878/8	TRUST - WASHER	1					
9	TC01878/9	SOCKET HEAD SCREW	2					
10	TC01878/10	CAP	1					
11	TC01878/11	PLUG	1					
12	TC01878/12	SEAL GROUP	2					

ROLLER LOWER

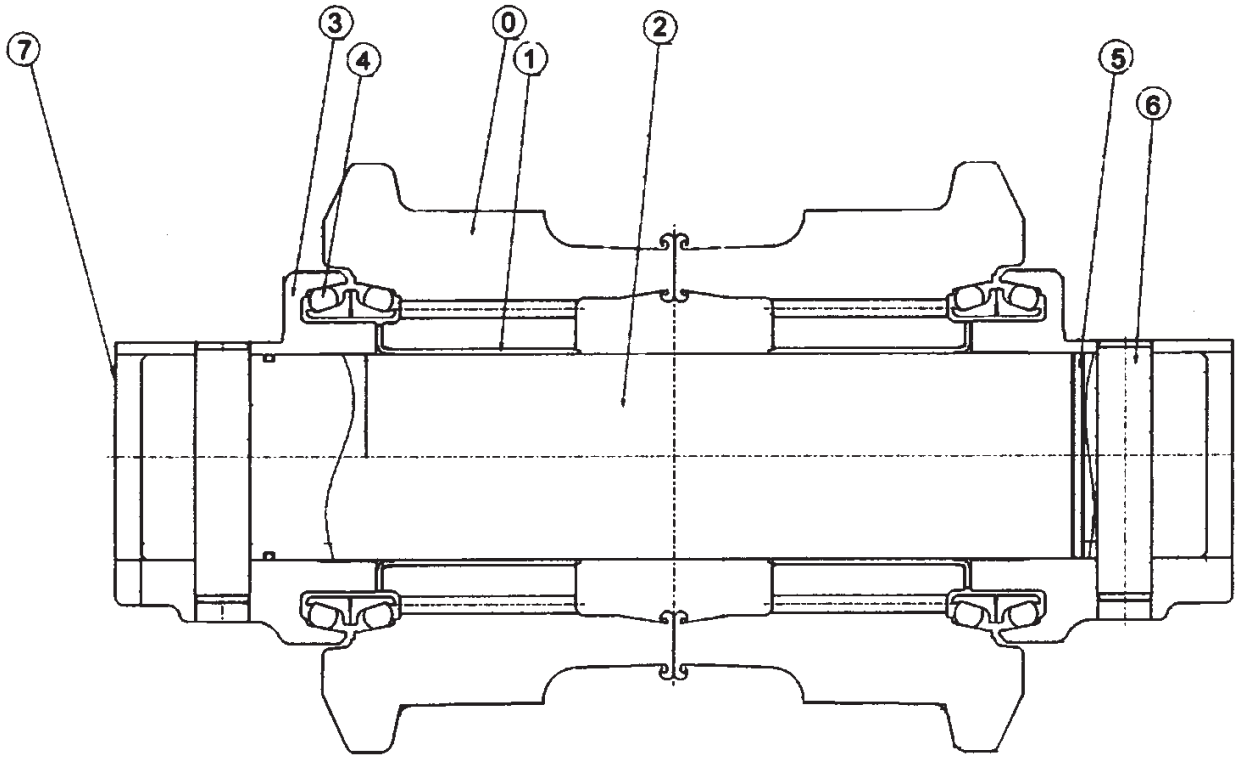

ITEM	PART NO.	PART NAME	QTY	S.C.	MACHINE SERIAL NO. ONWARDS	ICA	REPLACEABLE PART	
							PART NO.	QTY
--	**9257608**	**ROLLER LOWER ASSY.**	**--**					
0	7048312	ROLLER	1					
1	3081250	BUSHING	2					
2	3025060	AXLE	1					
3	2053081	COLLAR	2					
4	4317587	SEAL GROUP	2					
5	A810070	O-RING	2					
6	4137684	PIN	2					
7	4315607	PLUG	2					

TRACK ROLLER ASSY.

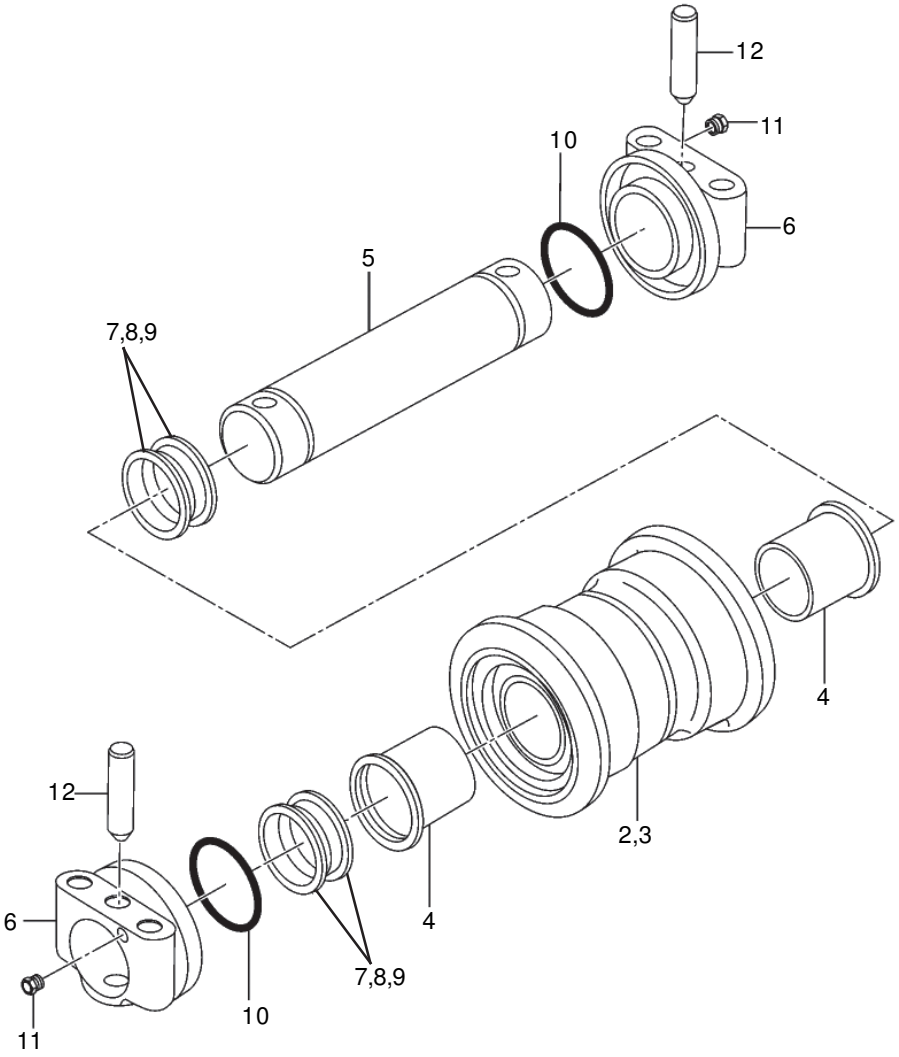

ITEM	PART NO.	PART NAME	QTY	S.C.	MACHINE SERIAL NO. ONWARDS	ICA	REPLACEABLE PART	
							PART NO.	QTY
--	**TC01879**	**TRACK ROLLER ASSY.**	**1**					
2	TC01879/2	TRACK ROLLER WITH BUSH	1					
3	TC01879/3	ROLLER	1					
4	TC01879/4	BUSH	2					
5	TC01879/5	SHAFT	1					
6	TC01879/6	BRACKET	2					
7	TC01879/7	SEAL — SEAL GROUP	2					
8	TC01879/8	SEAL — SEAL GROUP	2					
9	TC01879/9	SEAL — SEAL GROUP	2					
10	TC01879/10	O-RING	2					
11	TC01879/11	PLUG	2					
12	TC01879/12	PIN	2					

IDLER ASSY.

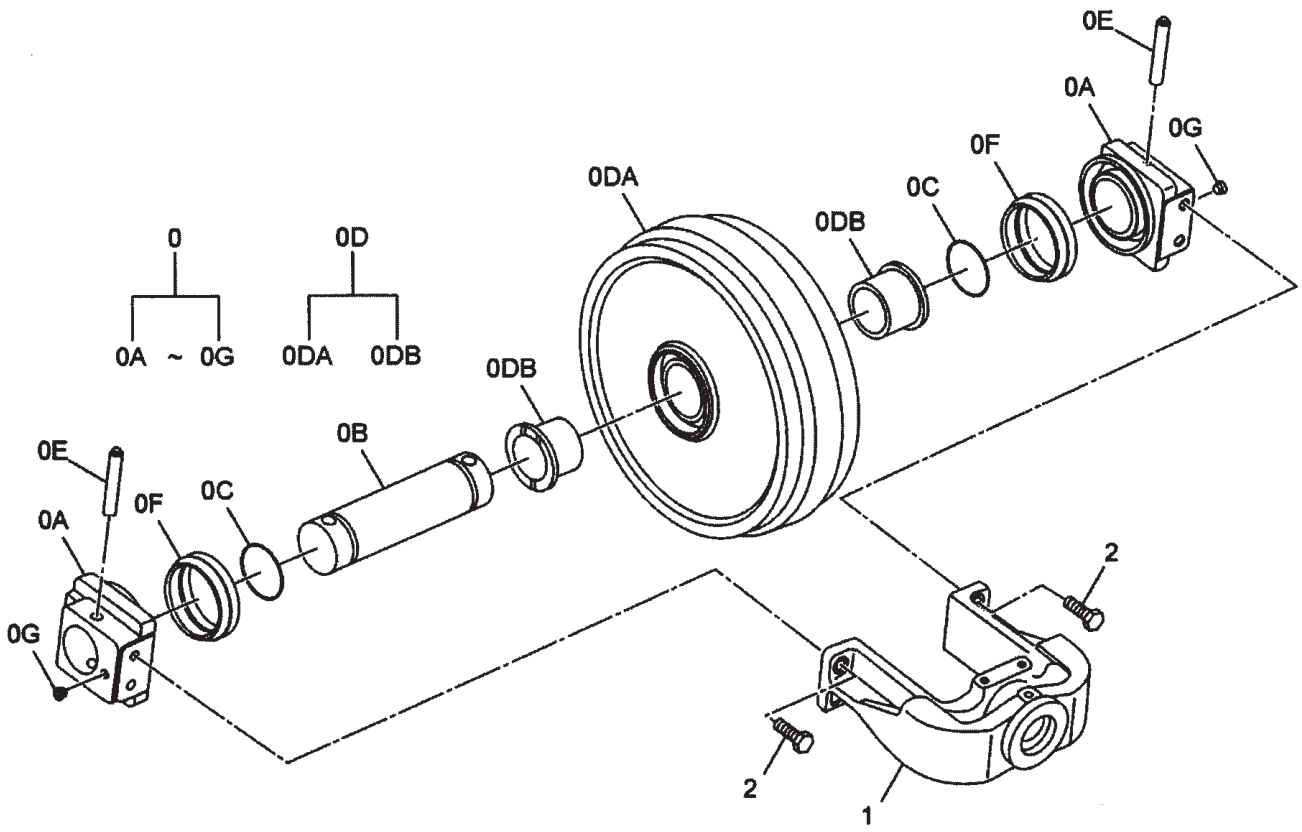

ITEM	PART NO.	PART NAME	QTY	S.C.	MACHINE SERIAL NO. ONWARDS	ICA	REPLACEABLE PART	
							PART NO.	QTY
--	**9245615**	**IDLER ASSY.**	**--**					
0	9245616	IDLER ASSY.	1		0ACH-000001			
0A	1032661	BEARING	2		0ACH-000001			
0B	3077237	AXLE	1		0ACH-000001			
0C	A810080	O-RING	2		0ACH-000001			
0D	9245617	IDLER	1		0ACH-000001			
0DA	7047467	IDLER	1		0ACH-000001			
0DB	3103740	BUSHING	2		0ACH-000001			
0E	4138084	PIN	2		0ACH-000001			
0F	4282633	SEAL GROUP	2		0ACH-000001			
0G	4315607	PLUG	2		0ACH-000001			
1	1023479	YOKE	1		0ACH-000001			
2	J901640	BOLT	4		0ACH-000001			

IDLER ASSY.

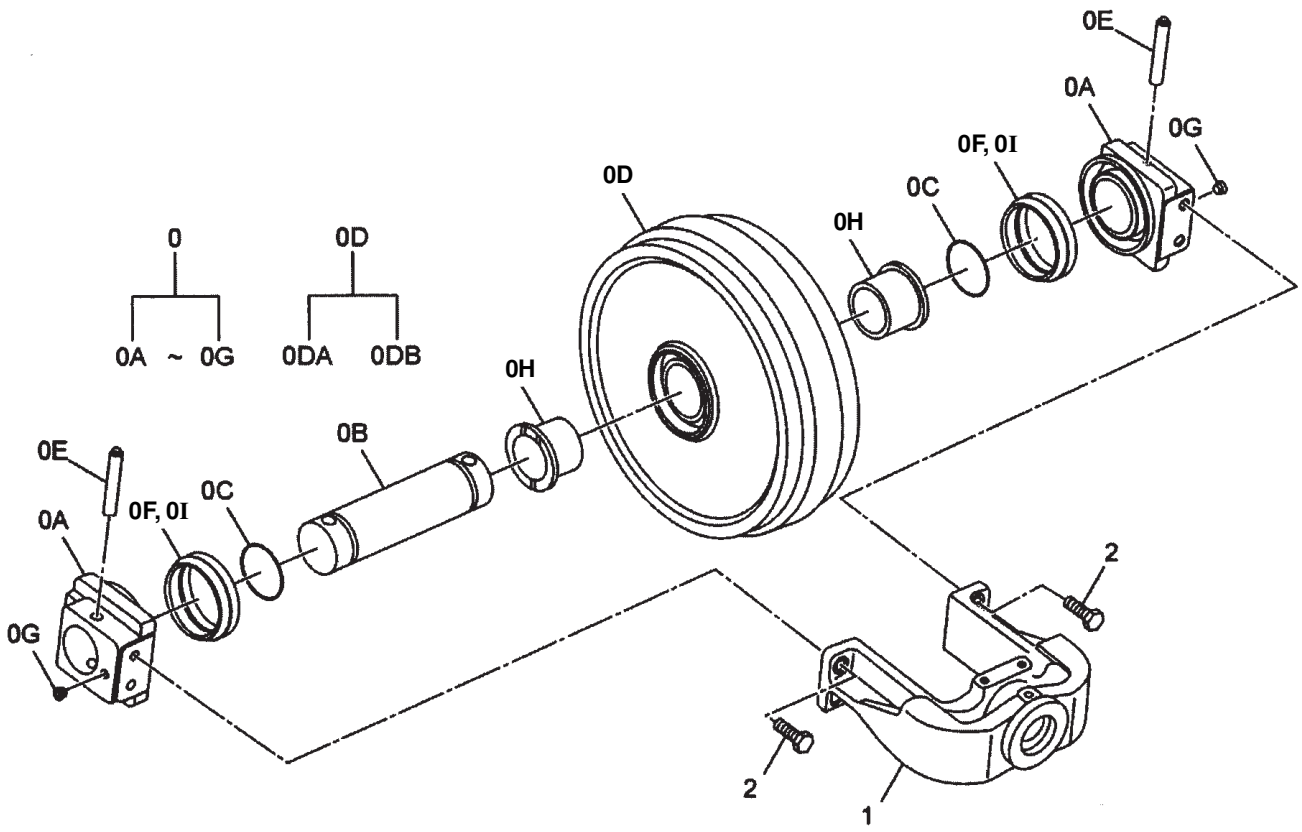

ITEM	PART NO.	PART NAME	QTY	S.C.	MACHINE SERIAL NO. ONWARDS	ICA	REPLACEABLE PART	
							PART NO.	QTY
--	**TC01880**	**FRONT IDLER WITH BRACKET YOKE**	**1**					
0A	TC01880/4	BRACKET	2					
0B	TC01880/2	SHAFT	1					
0C	TC01880/5	O-RING	2					
0D	TC01880/1	IDLER	1					
0H	TC01880/3	BUSHING	2					
0E	TC01880/9	PIN	2					
0F	TC01880/7	SEAL	4					
0G	TC01880/8	PLUG	2					
0I	TC01880/6	SEAL	4					
1	TC01880/10	YOKE	1					
2	TC01880/11	BOLT	4					
3	TC01880/12	WASHER	4					

SEAL GROUP = 0F + 0I

BLANK

FRONT ATTACHMENT

BOOM ASSY. 6.4M

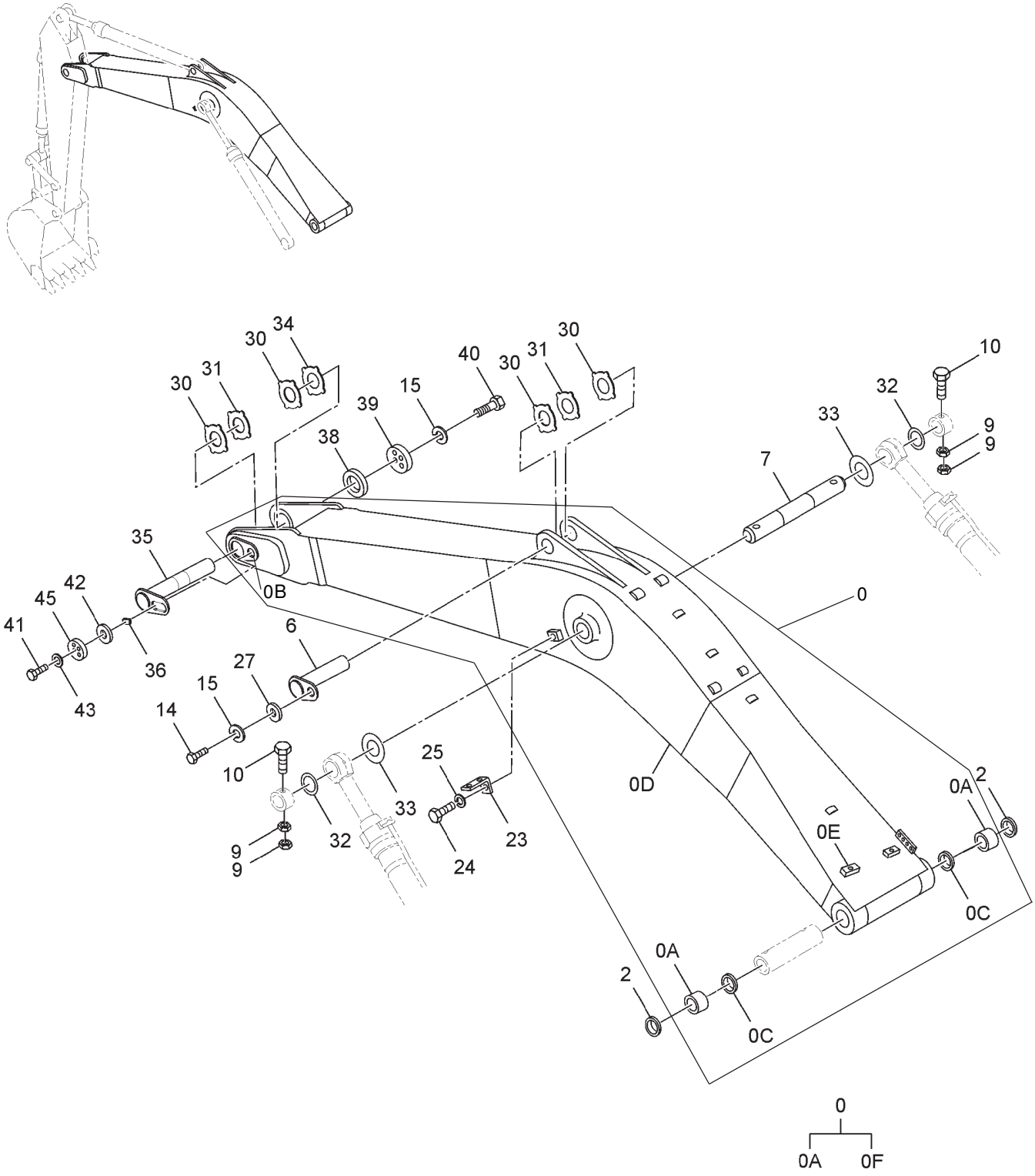

BOOM ASSY 6.4M

ITEM	PART NO.	PART NAME	QTY	S.C.	MACHINE SERIAL NO. ONWARDS	ICA	REPLACEABLE PART	
							PART NO.	QTY
--	**9205272**	**BOOM ASSY. (6.4M)**	**--**					
0	8081519	BOOM ASSY 6.4M	1		0ACH-000001			
0A	TD03093	BUSHING	2		0ACH-000001			
0B	4611731	STOPPER	1		0ACH-000001			
0C	4085479	SEAL;DUST	2		0ACH-000001			
0D	5007299	BOOM 6.4M	1		0ACH-000001			
0E	4438594	SEAT;SCREW	1		0ACH-000001			
2	4085479	SEAL;DUST	2		0ACH-000001			
6	8080628	PIN	1		0ACH-000001			
7	3079491	PIN	1		0ACH-000001			
9	J950020	NUT	4		0ACH-000001			
10	4435584	PIN;STOPPER	2		0ACH-000001			
14	J921840	BOLT	1		0ACH-000001			
15	J257218	WASHER;SPRING18	4		0ACH-000001			
23	4224631	BRACKET	2		0ACH-000001			
24	J901425	BOLT	2		0ACH-000001			
25	A590914	WASHER;SPRING	2		0ACH-000001			
27	4441471	PLATE	1		0ACH-000001			
30	4445635	PLATE THRUST	4		0ACH-000001			
31	4445636	THRUST PLATE	2		0ACH-000001			
32	4445637	THRUST PLATE	2		0ACH-000001			
33	4450015	THRUST PLATE	2		0ACH-000001			
34	4460373	THRUST PLATE	1		0ACH-000001			
35	8092014	PIN	1		0ACH-000001			
36	4611688	BLOCK	1		0ACH-000001			
38	4611648	SPACER	1		0ACH-000001			
39	4611642	STOPPER	1		0ACH-000001			
40	J921850	BOLT	3		0ACH-000001			
41	J922245	BOLT	1		0ACH-000001			
42	4611733	PLATE	1		0ACH-000001			
43	J257222	WASHER;SPRING	1		0ACH-000001			
45	4662435	STOPPER	2		0ACH-000001			

FRONT PIPING

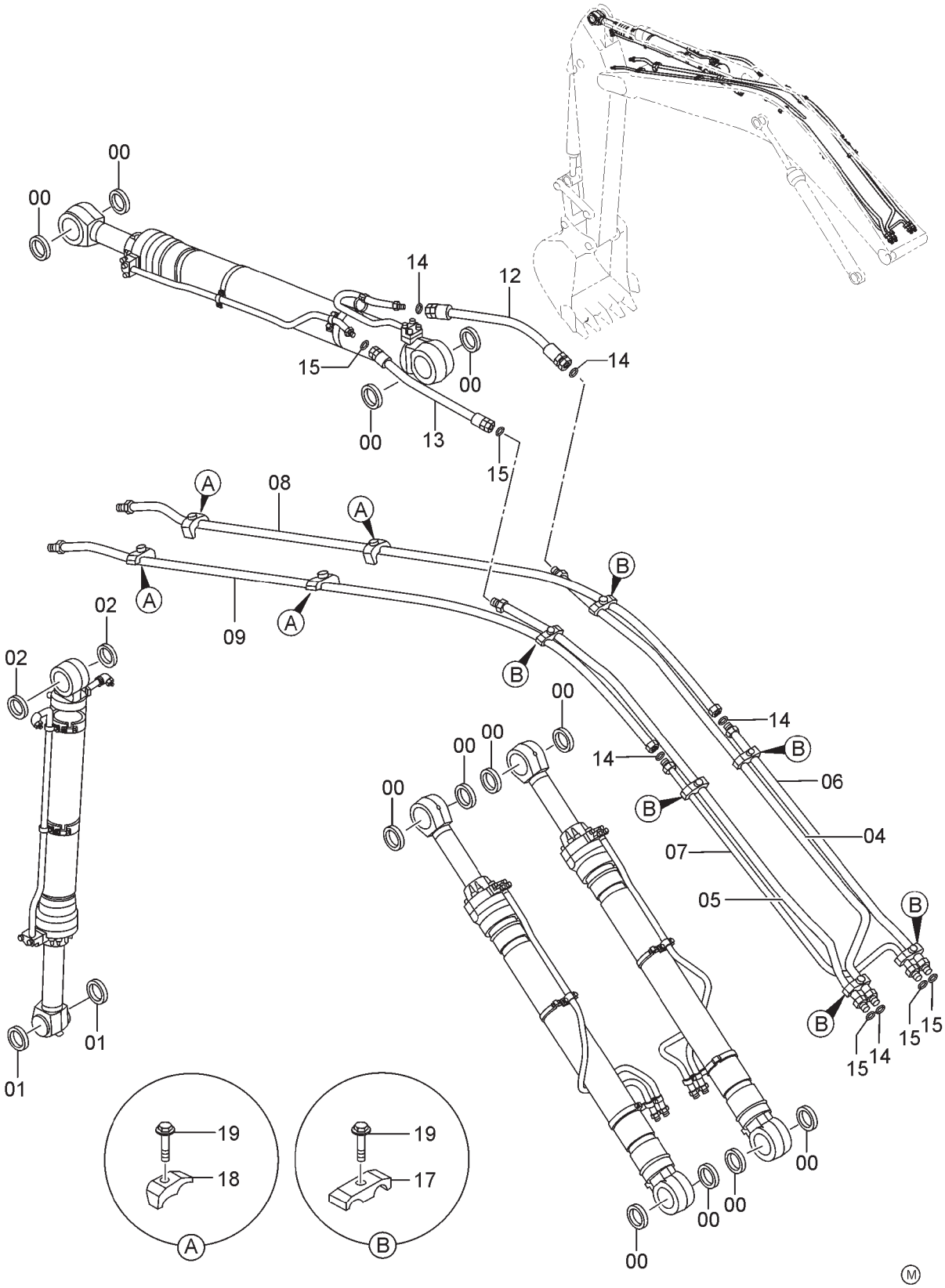

FRONT PIPING

ITEM	PART NO.	PART NAME	QTY	S.C.	SERIAL NO.	ICA	REPLACEABLE PART	
							PART NO.	QTY
--	**9162012**	**FRONT PIPING**	**--**					
0	4085479	SEAL;DUST	12		0ACH-000001			
1	4074008	SEAL;DUST	2		0ACH-000001			
2	4067901	SEAL DUST	2		0ACH-000001			
4	8069383	PIPE	1		0ACH-000001			
5	8069384	PIPE	1		0ACH-000001			
6	9727149	PIPE	1		0ACH-000001			
7	9727148	PIPE (BOOM FOOT)	1		0ACH-000001			
8	8069385	PIPE	1		0ACH-000001			
9	8069386	PIPE	1		0ACH-000001			
12	4387252	HOSE	1		0ACH-000001			
13	4345675	HOSE	1		0ACH-000001			
14	4187329	O-RING	5		0ACH-000001			
15	4187328	O-RING	5		0ACH-000001			
17	4189860	CLAMP;PIPE	6		0ACH-000001			
18	4190127	CLAMP;PIPE	4		0ACH-000001			
19	J011265	BOLT; SEMS	10		0ACH-000001			
19A	J901265	BOLT	1		0ACH-000001			
19B	A590912	WASHER;SPRING	1		0ACH-000001			

LUBRICATION PIPING

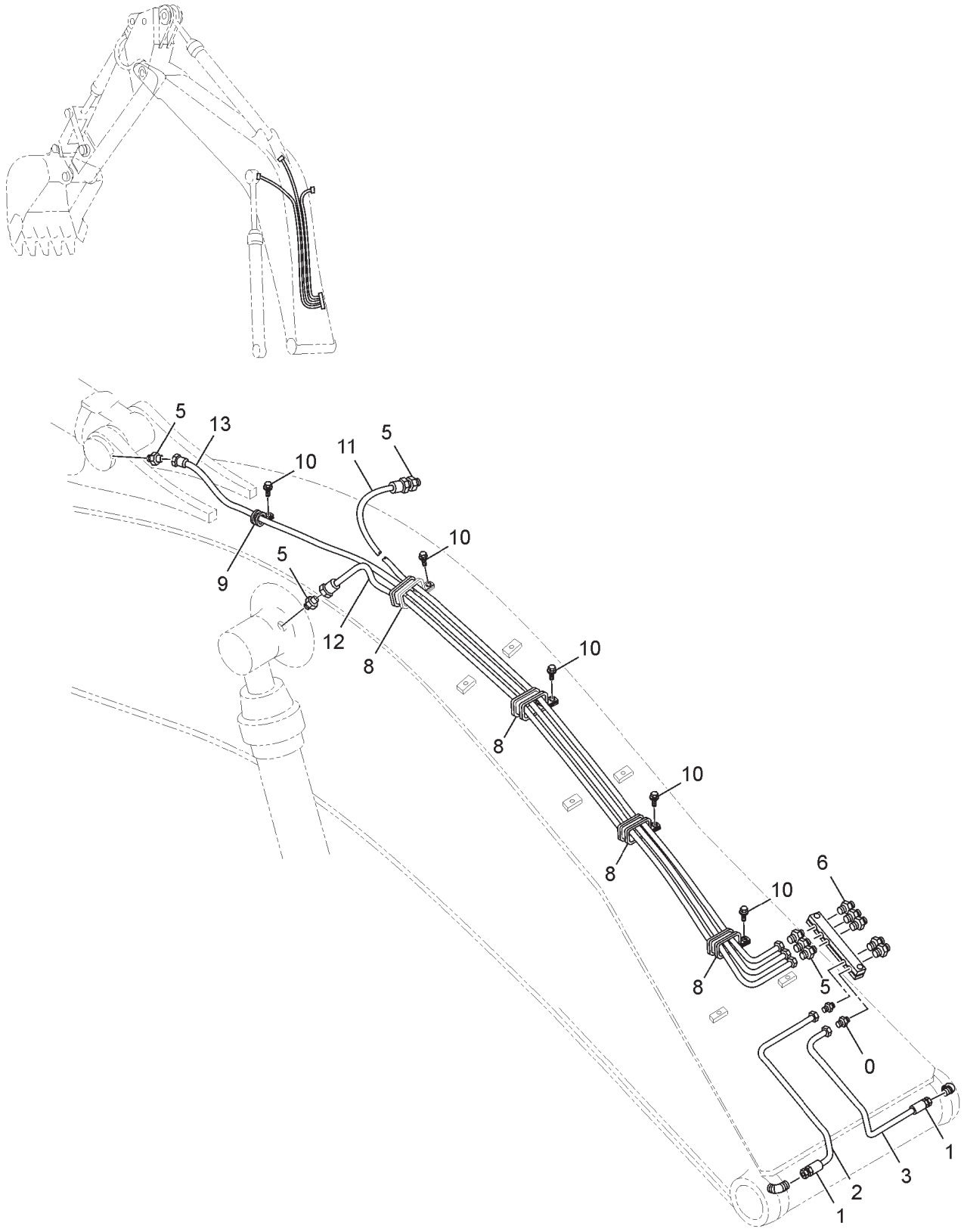

LUBRICATION PIPING

ITEM	PART NO.	PART NAME	QTY	S.C.	SERIAL NO.	ICA	REPLACEABLE PART	
							PART NO.	QTY
--	**TD05365**	**LUBRICATION PIPING**	**--**					
0	4360981	FITTING;PIPE	2		0ACH-000001			
1	4345297	FITTING;PIPE	2		0ACH-000001			
2	4387001	PIPE	1		0ACH-000001			
3	4387002	PIPE	1		0ACH-000001			
5	4154651	ADAPTER;S	6		0ACH-000001			
6	J75482	FITTING;GREASE	5		0ACH-000001			
8	4252877	CLIP	5		0ACH-000001			
9	4190261	CLIP	1		0ACH-000001			
10	J011016	BOLT;SEMS	6		0ACH-000001			
11	4289772	HOSE	1		0ACH-000001			
12	4257291	HOSE	1		0ACH-000001			
13	4316009	HOSE	1		0ACH-000001			

ARM; ASSY.

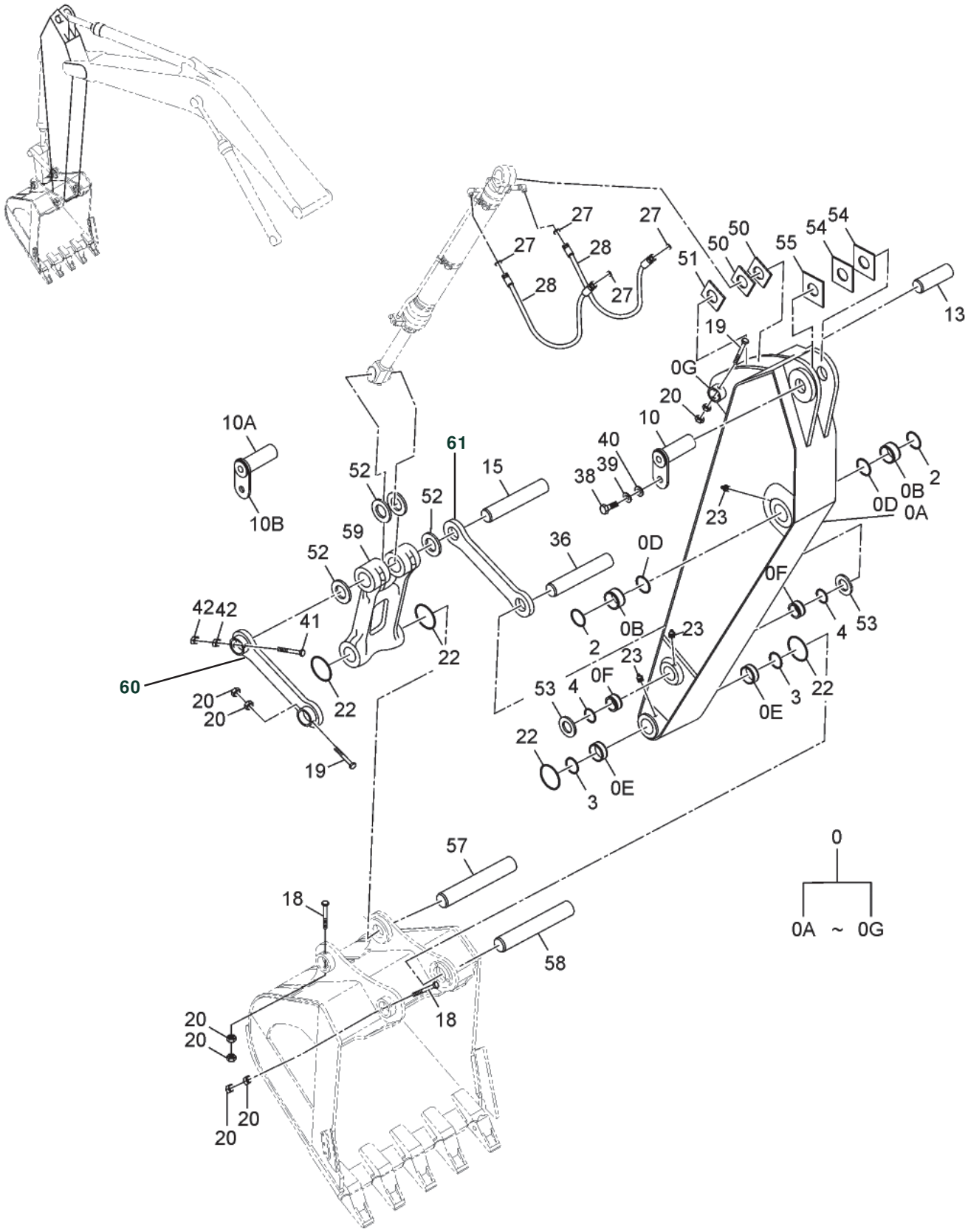

27
27
27
28
28
27
50
50
51
55
54
54
13
19
0G
20
10
40
39
38
10A
10B
61
15
52
52
52
59
36
0D
0D
0B
0A
2
23
0F
4
53
42
42
41
60
22
22
2
0B
23
23
0F
4
53
22
3
0E
20
20
19
22
3
0E
57
18
58
18
20
20
20
20
0
0A ~ 0G

ARM; ASSY.

ITEM	PART NO.	PART NAME	QTY	S.C.	MACHINE SERIAL NO. ONWARDS	ICA	REPLACEABLE PART	
							PART NO.	QTY
--	**TB01475**	**ARM ASSY (2.66M)**	**1**					
--	**TB01740**	**ARM ASSY (2.33M)**	**1**		**0ACH-000001**			
0	7043484	ARM;ASSY (2.66M)	1		0ACH-000001			
0	TC01749	ARM ASSY (2.33M)	1		0ACH-000001			
0A	5008662	ARM; (2.66M)	1		0ACH-000001			
0A	TA00914	ARM (2.33M)	1		0ACH-000001			
0B	4443884	BUSHING (2.33M ARM)	2		0ACH-000001			
0B	TD03093	BUSHING (2.66M ARM)	2		0ACH-000001			
0D	4085479	SEAL;DUST	2		0ACH-000001			
0E	TD02687	BUSHING	2		0ACH-000001			
0F	TD30001	BUSHING	2		0ACH-000001			
0G	4067720	STOPPER	1		0ACH-000001			
2	4085479	SEAL;DUST	2		0ACH-000001			
3	4074008	SEAL;DUST	2		0ACH-000001			
4	4067901	SEAL;DUST	2		0ACH-000001			
10	8080908	PIN	1		0ACH-000001			
10A	3089908	PIN	1		0ACH-000001			
10B	4439469	PLATE	1		0ACH-000001			
13	3079545	PIN	1		0ACH-000001			
15	3092037	PIN	1		0ACH-000001			
18.	4435127	PIN;STOPPER	2		0ACH-000001			
19	4435126	PIN;STOPPER	2		0ACH-000001			
20	J950020	NUT	8		0ACH-000001			
22	TE04663	O-RING	4		0ACH-000001			
23	J75481	FITTING;GREASE	6		0ACH-000001			
27	4187328	O-RING	4		0ACH-000001			
28	4399783	HOSE (2.66M ARM)	2		0ACH-000001			
28	4303025	HOSE (2.33M ARM)	2		0ACH-000001			
36	3089968	PIN	1		0ACH-000001			
38	J921840	BOLT	1		0ACH-000001			
39	J257218	WASHER;SPRING	1		0ACH-000001			
40	4441471	PLATE	1		0ACH-000001			
41	4435128	PIN;STOPPER	1		0ACH-000001			
42	J950022	NUT	2		0ACH-000001			
50	4444284	PLATE;THRUST	2		0ACH-000001			
51	4444285	PLATE;THRUST	1		0ACH-000001			
52	4450014	PLATE;THRUST	4		0ACH-000001			
53	4450013	PLATE;THRUST	2		0ACH-000001			
54	4445635	PLATE;THRUST	2		0ACH-000001			
55	4445636	THRUST PLATE	1		0ACH-000001			
57	3090418	PIN	1		0ACH-000001			
58	3090417	PIN	1		0ACH-000001			
59	TD08381	H-LINK ASSY.	1		0ACH-000001			
60	8070029	LINK	1					
61	8070028	LINK	1					

H - LINK

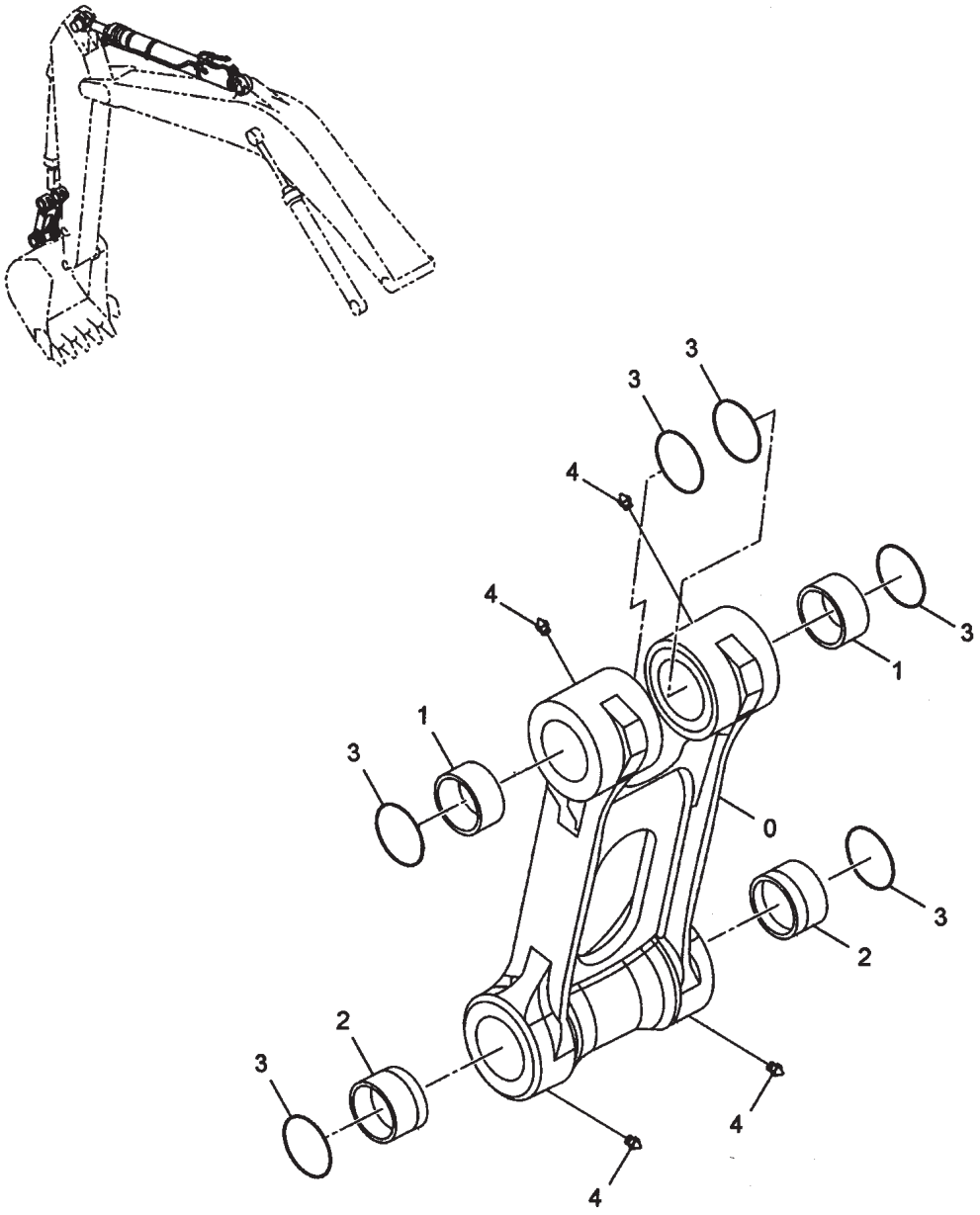

ITEM	PART NO.	PART NAME	QTY	S.C.	MACHINE SERIAL NO. ONWARDS	ICA	REPLACEABLE PART	
							PART NO.	QTY
--	**TD08381**	**H-LINK ASSY.**	**--**					
0	TC02090	H-LINK	1		0ACH-000001			
1	TD03094	BUSHING	2		0ACH-000001			
2	TD02687	BUSHING	2		0ACH-000001			
3	4074008	SEAL; DUST	6		0ACH-000001			
4	J75481	FITTING; GREASE	4		0ACH-000001			

LINK

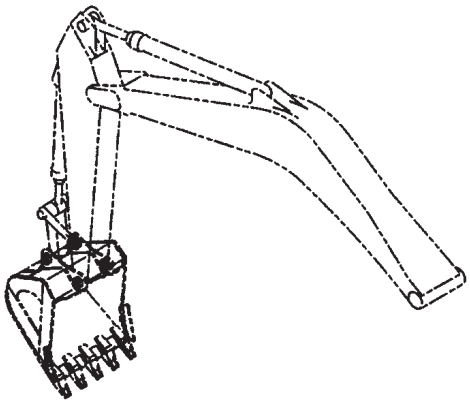

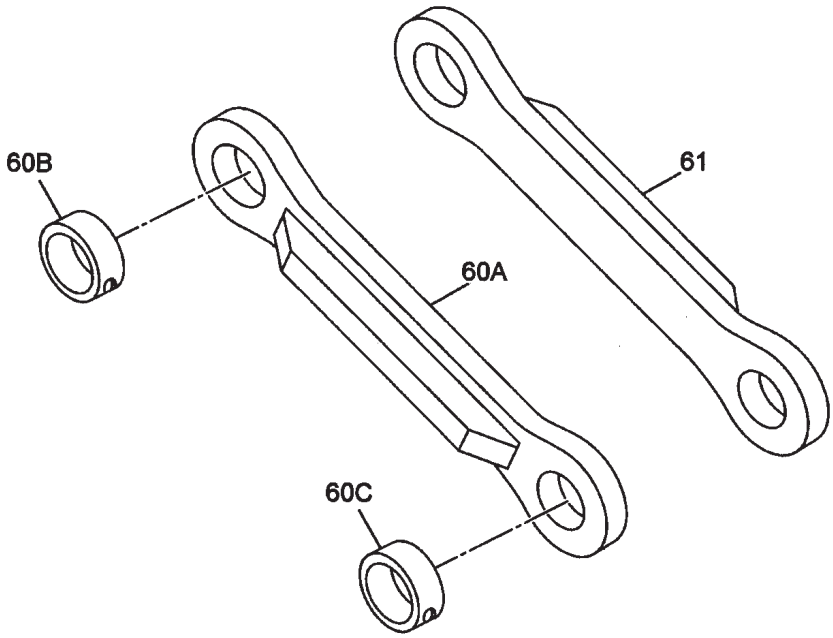

ITEM	PART NO.	PART NAME	QTY	S.C.	MACHINE SERIAL NO. ONWARDS	ICA	REPLACEABLE PART	
							PART NO.	QTY
60	8070029	LINK	1		0ACH-000001			
60A	8070028	LINK	1		0ACH-000001			
60B	4067720	STOPPER	1		0ACH-000001			
60C	4399183	STOPPER	1		0ACH-000001			
61	8070028	LINK	1		0ACH-000001			

BLANK

BACKHOE CYLINDER DETAILS

BOOM CYLINDER LH

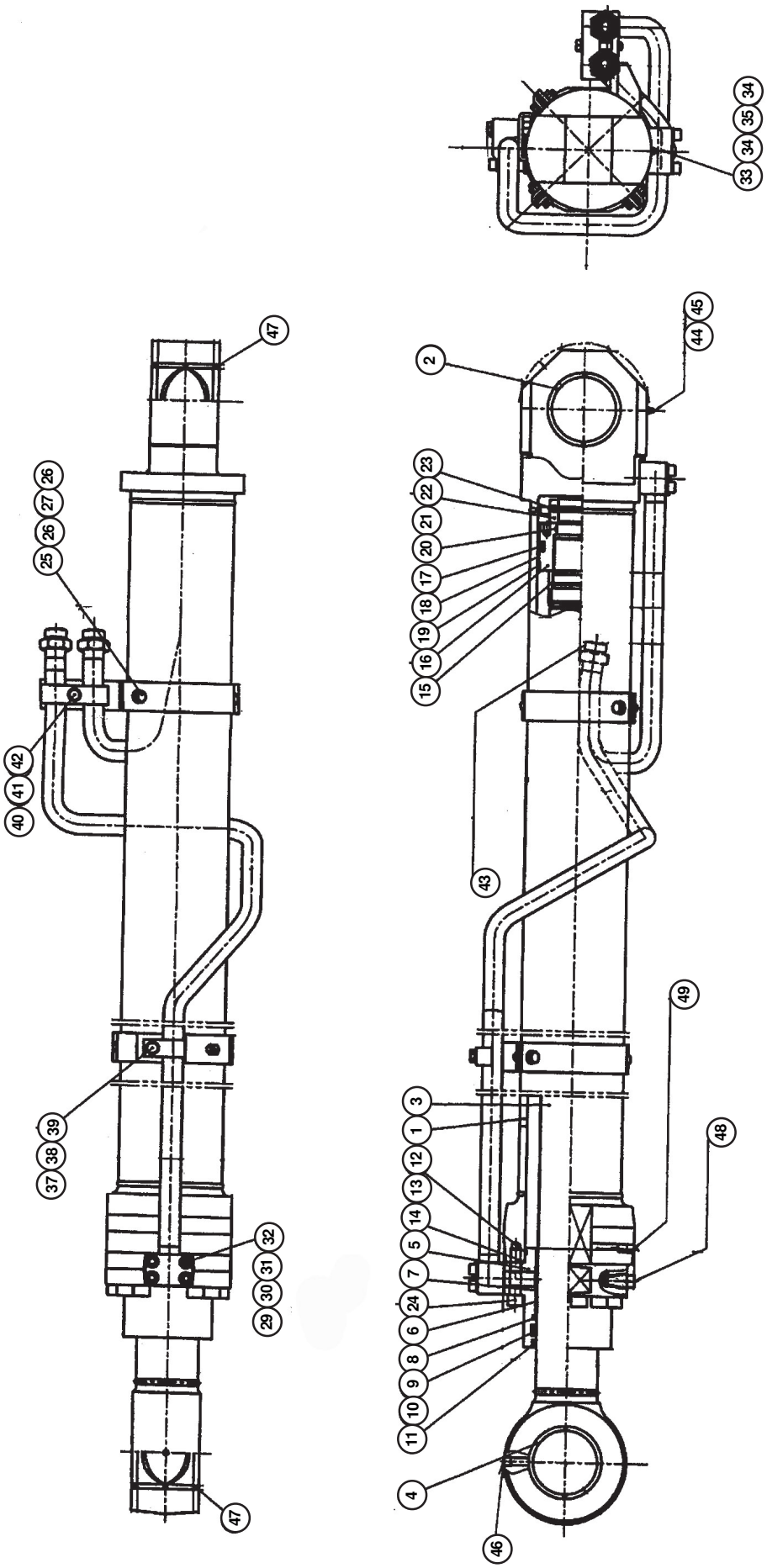

BOOM CYLINDER LH

ITEM	PART NO.	PART NAME	QTY	S.C.	MACHINE SERIAL NO. ONWARDS	ICA	REPLACEABLE PART	
							PART NO.	QTY
--	TD04936	BOOM CYL LH	1					
01	TD04936/1	TUBE ASSEMBLY	1					
2	TD04936/2	BUSH, STEEL	1					
3	TD04936/3	ROD ASSY	1					
4	TD04936/4	BUSH STEEL	1					
5	TD04936/5	ROD COVER	1					
6	TD04936/6	DD BUSH	1					
7	TD04936/7	RING RETAINING	1					
8	TD04936/8	SEAL BUFFER	1					
9	TD04936/9	U-PACKING	1					
10	TD04936/10	RING BACKUP	1					
11	TD04936/11	WIPER DUST	1					
12	TD04936/12	O-RING	1					
13	TD04936/13	RING BACKUP	1					
14	TD04936/14	O-RING	1					
15	TD04936/15	RING CUSHION	1					
16	TD04936/16	PISTON	1					
17	TD04936/17	SEAL SLIPPER	1					
18	TD04936/18	RING;WEAR	1					
19	TD04936/19	RING SLYD	1					
20	TD04936/20	O-RING	1					
21	TD04936/21	RING BACKUP	1					
22	TD04936/22	NUT PISTON	1					
23	TD04936/23	SCREW SET	1					
24	TD04936/24	BOLT HEX SOCKET	1					
25	TD04936/25	PIPE BAND ASSY	1					
26	TD04936/26	BAND PIPE	1					
27	TD04936/27	WASHER SPRING	1					
28	TD04936/28	BOLT HEX	1					
29	TD04936/29	PIPE ASSY	1					
30	TD04936/30	O-RING	1					
31	TD04936/31	WASHER SPRING	1					
32	TD04936/32	BOLT HEX SOCKET	1					
33	TD04936/33	PIPE ASSY-R	1					
34	TD04936/34	O-RING	1					
35	TD04936/35	WASHER SPRING	1					
36	TD04936/36	BOLT HEX SOCKET	1					
37	TD04936/37	CLAMP PIPE	1					
38	TD04936/38	WASHER SPRING	1					
39	TD04936/39	BOLT HEX	1					
40	TD04936/40	CLAMP PIPE	1					
41	TD04936/41	WASHER SPRING	1					
42	TD04936/42	BOLT HEX	1					
43	TD04936/43	CAP DUST	1					
44	TD04936/44	NIPPLE GREASE	1					
45	TD04936/45	CAP NIPPLE	1					
46	TD04936/46	CAP NIPPLE	1					
47	TD04936/47	WIPER PIN	1					
48	TD04936/48	ORIFICE	1					
49	TD04936/49	PLUG HEX SOCKET	1					
50	TD04936/50	PIPE BAND ASSY-R	1					
51	TD04936/51	BAND PIPE	1					
52	TD04936/52	WASHER SPRING	1					
53	TD04936/53	BOLT HEX	1					
54	TE07082	SEAL KIT	1					

CYLINDER BOOM (LH)

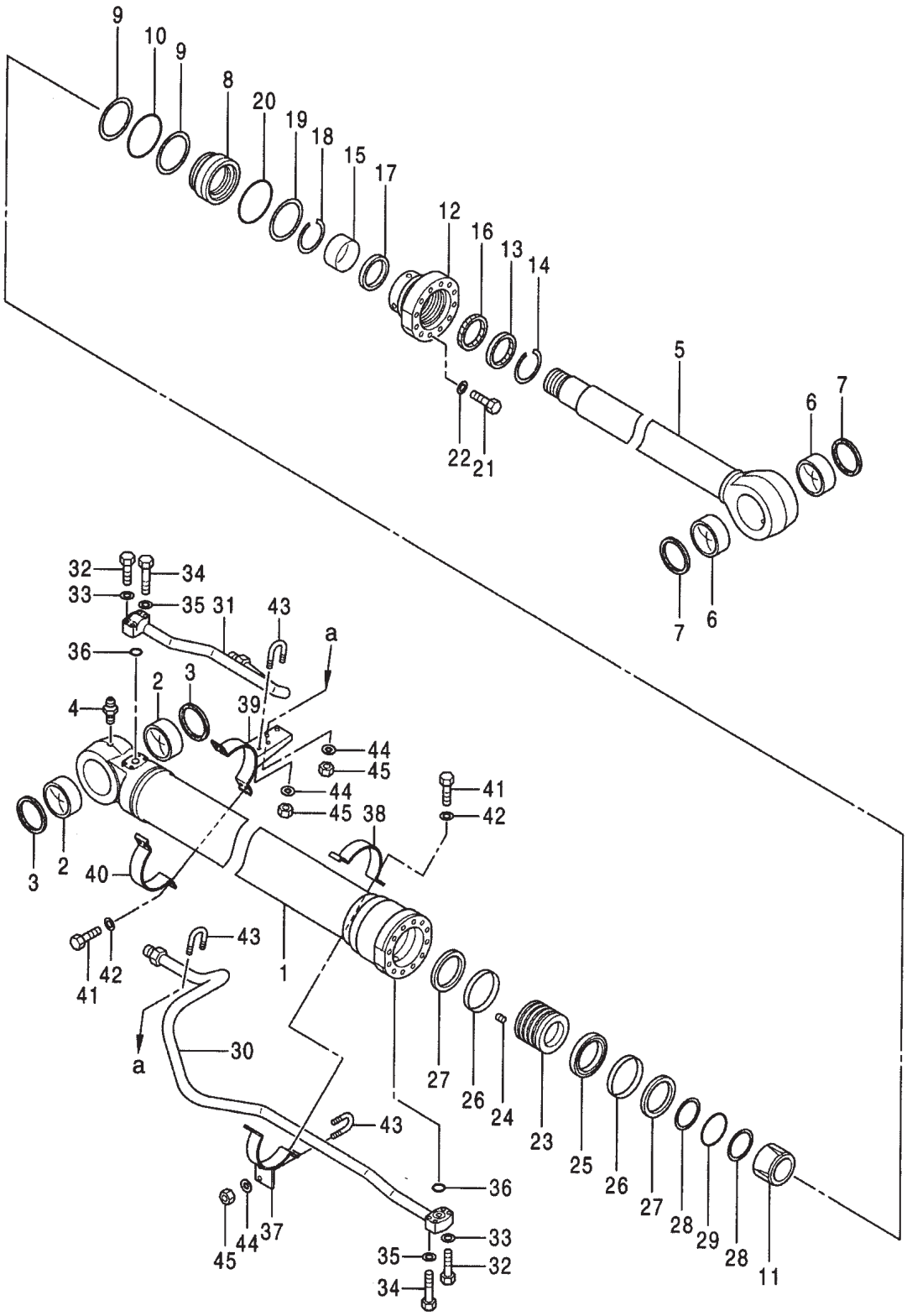

100 { 3~2, 7~2, 9~2, 10~1, 13~1, 16~1, 17~1, 19~1, 20~1, 25~1, 26~2, 28~2, 29~1, 36~2

CYLINDER BOOM (LH)

ITEM	PART NO.	PART NAME	QTY	S.C.	MACHINE SERIAL NO. ONWARDS	ICA	REPLACEABLE PART	
							PART NO.	QTY
--	**4611474**	**CYLINDER :BOOM**	**1**				**9292425**	**1**
1-29	0961201	CYLINDER	1					
1	0961202	TUBE: CYLINDER	1					
2	4381855	BUSHING	2					
3	4085479	SEAL: DUST	2	K				
4	0920505	FITTING	1					
5	0961203	ROD:PISTON	1					
6	4381855	BUSHING	2					
7	4085479	SEAL: DUST	2	K				
8	0961204	COLLAR	1					
9	0961205	RING: BACK-UP	2	K				
10	0961206	O-RING	1	K				
11	0961207	PLUNGER	1					
12	0961208	HEAD: CYL.	1					
13	0961209	SEAL:DUST	1	K				
14	0961210	RING:RETAINING	1					
15	0961211	BUSHING	1					
16	0961212	PACKING	1	K				
17	0961213	RING	1	K				
18	0961214	RING:RETAINING	1					
19	0961205	RING:BACK-UP	1	K				
20	0961206	O-RING	1	K				
21	0961215	BOLT	12					
22	0961216	WASHER	12					
23	0961217	PISTON	1					
24	0961218	SCREW	1					
25	0961219	RING:PISTON	1	K				
26	0961220	RING:WEAR	2	K				
27	0961221	RING	2					
28	0961222	RING:BACK-UP	2	K				
29	0961223	O-RING	1	K				
30	**0961301**	**PIPE**	1					
31	0961302	PIPE	1					
32	0961226	BOLT	4					
33	0961227	WASHER	4					
34	0961228	BOLT	4					
35	0961227	WASHER	4					
36	0961229	O-RING	2	K				
37	0961230	BRACKET	1					
38	0961231	BAND	1					
39	0961303	BRACKET	1					
40	0961233	BAND	1					
41	0961234	BOLT	6					
42	0961227	WASHER	6					
43	0961235	CLIP	3					
44	0961236	WASHER	6					
45	0961237	NUT	6					
100	4640107	KIT; SEAL	1					

BOOM CYLINDER (LH)

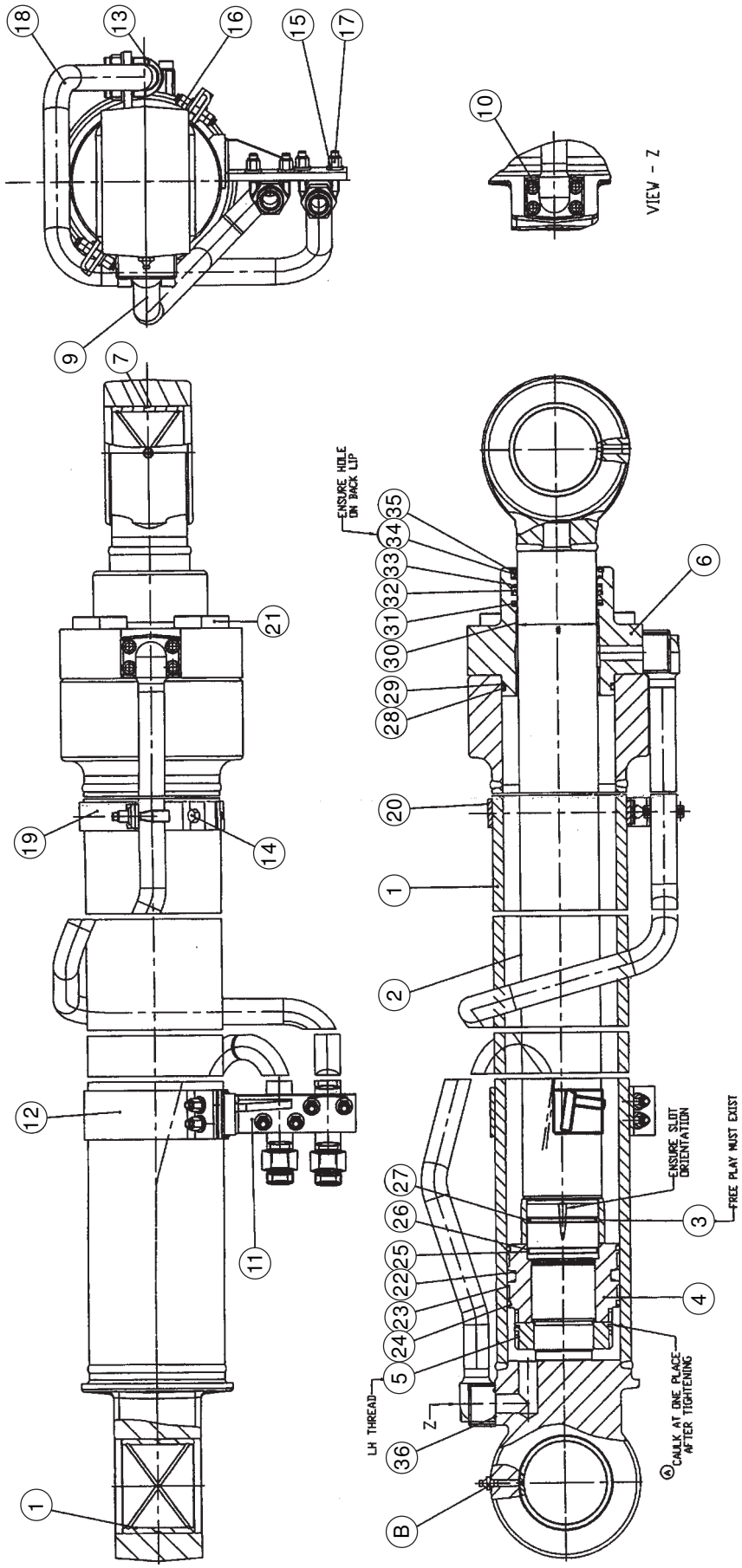

BOOM CYLINDER (LH)

ITEM	PART NO.	PART NAME	QTY	S.C.	MACHINE SERIAL NO. ONWARDS	ICA	REPLACEABLE PART	
							PART NO.	QTY
--	**TC01576**	**BOOM CYLINDER (LH)**	**1**					
1	TC01576/1	TUBE S/A	1					
2	TC01576/2	PISTON ROD S/A	1					
3	TC01576/3	H.E. CUSH. BUSH	1					
4	TC01576/4	PISTON	1					
5	TC01576/5	PISTON ROD NUT	1					
6	TC01576/6	HEAD END COVER	1					
7	TC01576/7	BUSH	2					
8	TC01576/8	GREASE NIPPLE	1					
9	TC01576/9	PIPE *S/*A CE (LH)	1					
10	TC01576/10	HEX.SOC.HD.CAP SCREW	8					
11	TC01576/11	CLAMP *S/*A (LH)	1					
12	TC01576/12	CLAMP	1					
13	TC01576/13	CLAMP	3					
14	TC01576/14	HEX. HD. BOLT	6					
15	TC01576/15	WASHER	12					
16	TC01576/16	NYLOC NUT	6					
17	TC01576/17	NYLOC NUT	6					
18	TC01576/18	PIPE *S/*A HE (LH)	1					
19	TC01576/19	CLAMP *S/A*	1					
20	TC01576/20	CLAMP	1					
21	TC01576/21	HEX.SOC.HD.CAP SCREW	8					
22	TC01576/22	PISTON SEAL	1					
23	TC01576/23	PISTON BEARING	2					
24	TC01576/24	PISTON BEARING	2					
25	TC01576/25	O-RING	1					
26	TC01576/26	BACK-UP RING	2					
27	TC01576/27	CUSHION SEAL	1					
28	TC01576/28	O-RING	1					
29	TC01576/29	BACK UP RING	1					
30	TC01576/30	BIMETAL BUSH	1					
31	TC01576/31	ROD SEAL	1					
32	TC01576/32	ROD SEAL	1					
33	TC01576/33	BACK-UP RING (ROD SEAL)	1					
34	TC01576/34	WIPER	1					
35	TC01576/35	SNAP RING	1					
36	TC01576/36	O-RING	2					
--	TE07247	SEAL KIT	1					

BOOM CYLINDER (RH)

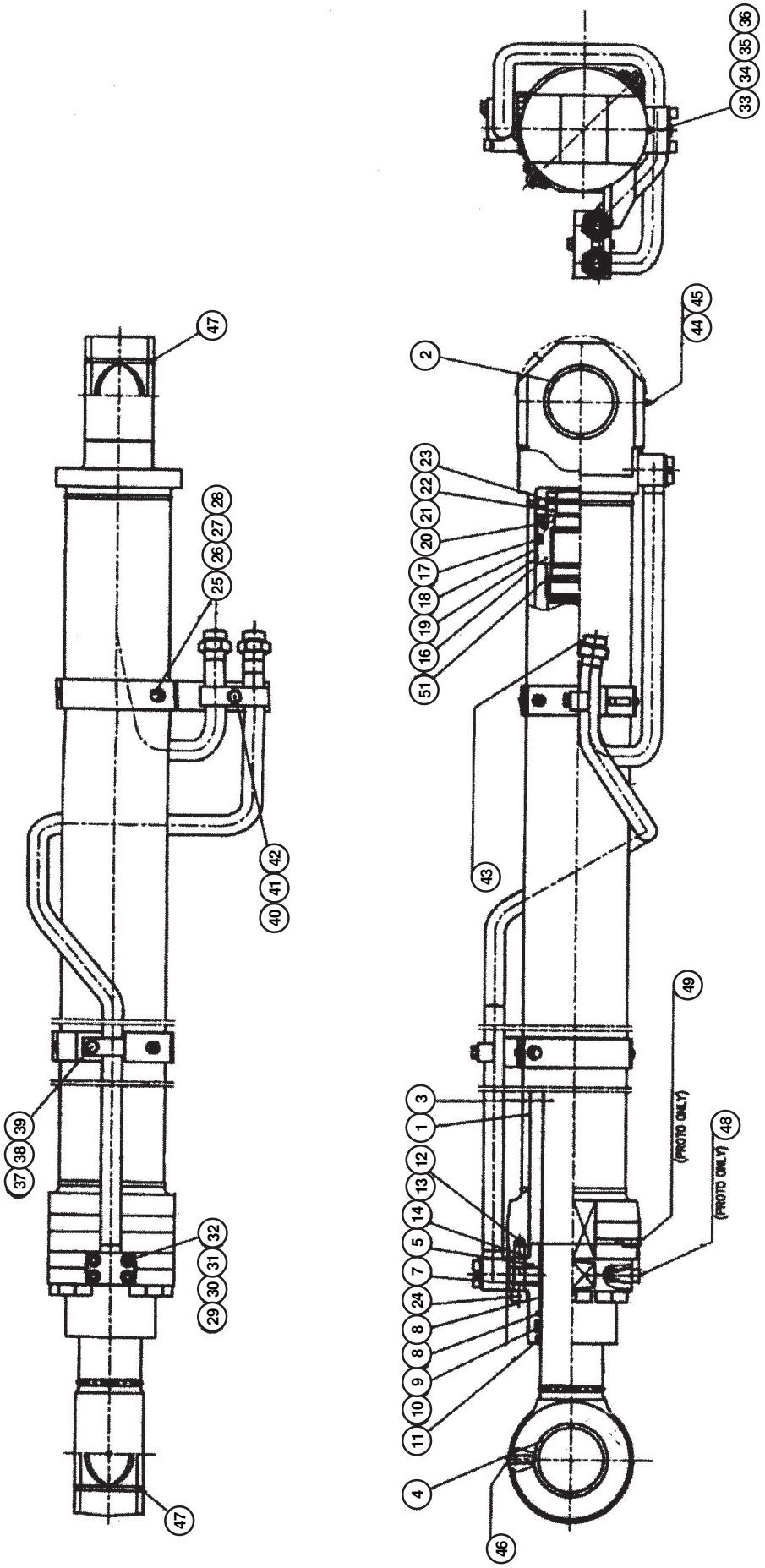

BOOM CYLINDER (RH)

ITEM	PART NO.	PART NAME	QTY	S.C.	MACHINE SERIAL NO. ONWARDS	ICA	REPLACEABLE PART	
							PART NO.	QTY
--	TD04937	BOOM CYL LH	1					
01	TD04937/1	TUBE ASSEMBLY	1					
2	TD04937/2	BUSH, STEEL	1					
3	TD04937/3	ROD ASSY	1					
4	TD04937/4	BUSH STEEL	1					
5	TD04937/5	ROD COVER	1					
6	TD04937/6	DD BUSH	1					
7	TD04937/7	RING RETAINING	1					
8	TD04937/8	SEAL BUFFER	1					
9	TD04937/9	U-PACKING	1					
10	TD04937/10	RING BACKUP	1					
11	TD04937/11	WIPER DUST	1					
12	TD04937/12	O-RING	1					
13	TD04937/13	RING BACKUP	1					
14	TD04937/14	O-RING	1					
15	TD04937/15	RING CUSHION	1					
16	TD04937/16	PISTON	1					
17	TD04937/17	SEAL SLIPPER	1					
18	TD04937/18	RING;WEAR	1					
19	TD04937/19	RING SLYD	1					
20	TD04937/20	O-RING	1					
21	TD04937/21	RING BACKUP	1					
22	TD04937/22	NUT PISTON	1					
23	TD04937/23	SCREW SET	1					
24	TD04937/24	BOLT HEX SOCKET	1					
25	TD04937/25	PIPE BAND ASSY H	1					
26	TD04937/26	BAND PIPE	1					
27	TD04937/27	WASHER SPRING	1					
28	TD04937/28	BOLT HEX	1					
29	TD04937/29	PIPE ASSY H	1					
30	TD04937/30	O-RING	1					
31	TD04937/31	WASHER SPRING	1					
32	TD04937/32	BOLT HEX SOCKET	1					
33	TD04937/33	PIPE ASSY-R	1					
34	TD04937/34	O-RING	1					
35	TD04937/35	WASHER SPRING	1					
36	TD04937/36	BOLT HEX SOCKET	1					
37	TD04937/37	CLAMP PIPE	1					
38	TD04937/38	WASHER SPRING	1					
39	TD04937/39	BOLT HEX	1					
40	TD04937/40	CLAMP PIPE	1					
41	TD04937/41	WASHER SPRING	1					
42	TD04937/42	BOLT HEX	1					
43	TD04937/43	CAP DUST	1					
44	TD04937/44	NIPPLE GREASE	1					
45	TD04937/45	CAP NIPPLE	1					
46	TD04937/46	CAP NIPPLE	1					
47	TD04937/47	WIPER PIN	1					
48	TD04937/48	ORIFICE	1					
49	TD04937/49	PLUG HEX SOCKET	1					
50	TD04937/50	PIPE BAND ASSY-R	1					
51	TD04937/51	BAND PIPE	1					
52	TD04937/52	WASHER SPRING	1					
53	TD04937/53	BOLT HEX	1					
54	TE07082	SEAL KIT	1					

CYLINDER BOOM (RH)

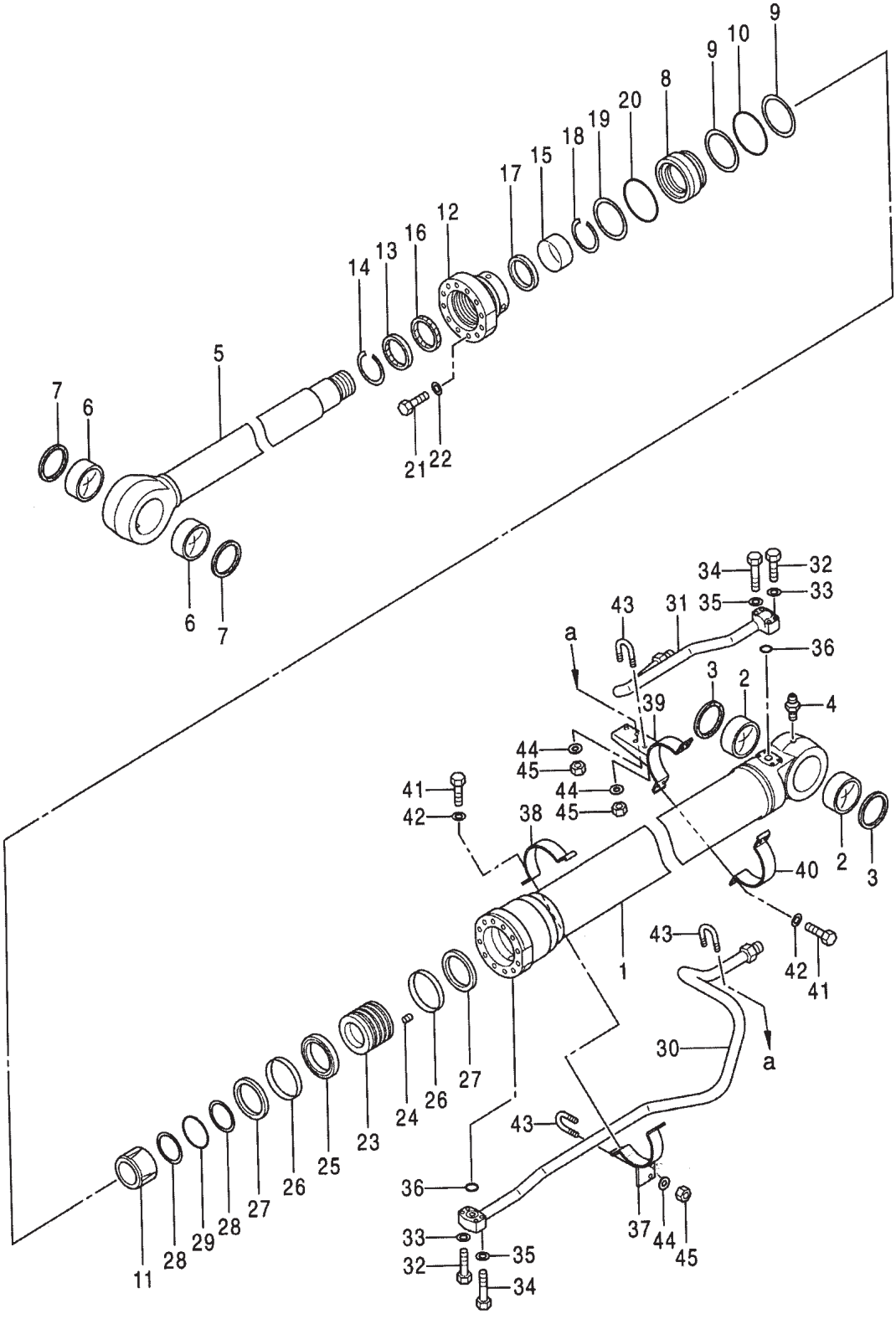

100 { 3~2, 7~2, 9~2, 10~1, 13~1, 16~1, 17~1, 19~1, 20~1, 25~1, 26~2, 28~2, 29~1, 36~2

CYLINDER BOOM (RH)

ITEM	PART NO.	PART NAME	QTY	S.C.	MACHINE SERIAL NO. ONWARDS	ICA	REPLACEABLE PART	
							PART NO.	QTY
--	**4611473**	**CYLINDER;BOOM**	**--**				**9292424**	**1**
1-29	0961201	CYLINDER	1					
1	0961202	TUBE; CYLINDER	1					
2	4381855	BUSHING	2					
3	4085479	SEAL; DUST	2	K				
4	0920505	FITTING	1					
5	0961203	ROD;PISTON	1					
6	4381855	BUSHING	2					
7	4085479	SEAL; DUST	2	K				
8	0961204	COLLAR	1					
9	0961205	RING; BACK-UP	2	K				
10	0961206	O-RING	1	K				
11	0961207	PLUNGER	1					
12	0961208	HEAD; CYL.	1					
13	0961209	SEAL;DUST	1	K				
14	0961210	RING;RETAINING	1					
15	0961211	BUSHING	1					
16	0961212	PACKING	1	K				
17	0961213	RING	1	K				
18	0961214	RING;RETAINING	1					
19	0961205	RING;BACK-UP	1	K				
20	0961206	O-RING	1	K				
21	0961215	BOLT	12					
22	0961216	WASHER	12					
23	0961217	PISTON	1					
24	0961218	SCREW	1					
25	0961219	RING; PISTON	1	K				
26	0961220	RING;WEAR	2	K				
27	0961221	RING	2					
28	0961222	RING;BACK-UP	2	K				
29	0961223	O-RING	1	K				
30	0961224	PIPE	1					
31	0961225	PIPE	1					
32	0961226	BOLT	4					
33	0961227	WASHER	4					
34	0961228	BOLT	4					
35	0961227	WASHER	4					
36	0961229	O-RING	2	K				
37	0961230	BRACKET	1					
38	0961231	BAND	1					
39	0961232	BRACKET	1					
40	0961233	BAND	1					
41	0961234	BOLT	6					
42	0961227	WASHER	6					
43	0961235	CLIP	3	I				
44	0961236	WASHER	6					
45	0961237	NUT	6					
100	4640107	KIT;SEAL	1					

BOOM CYLINDER (RH)

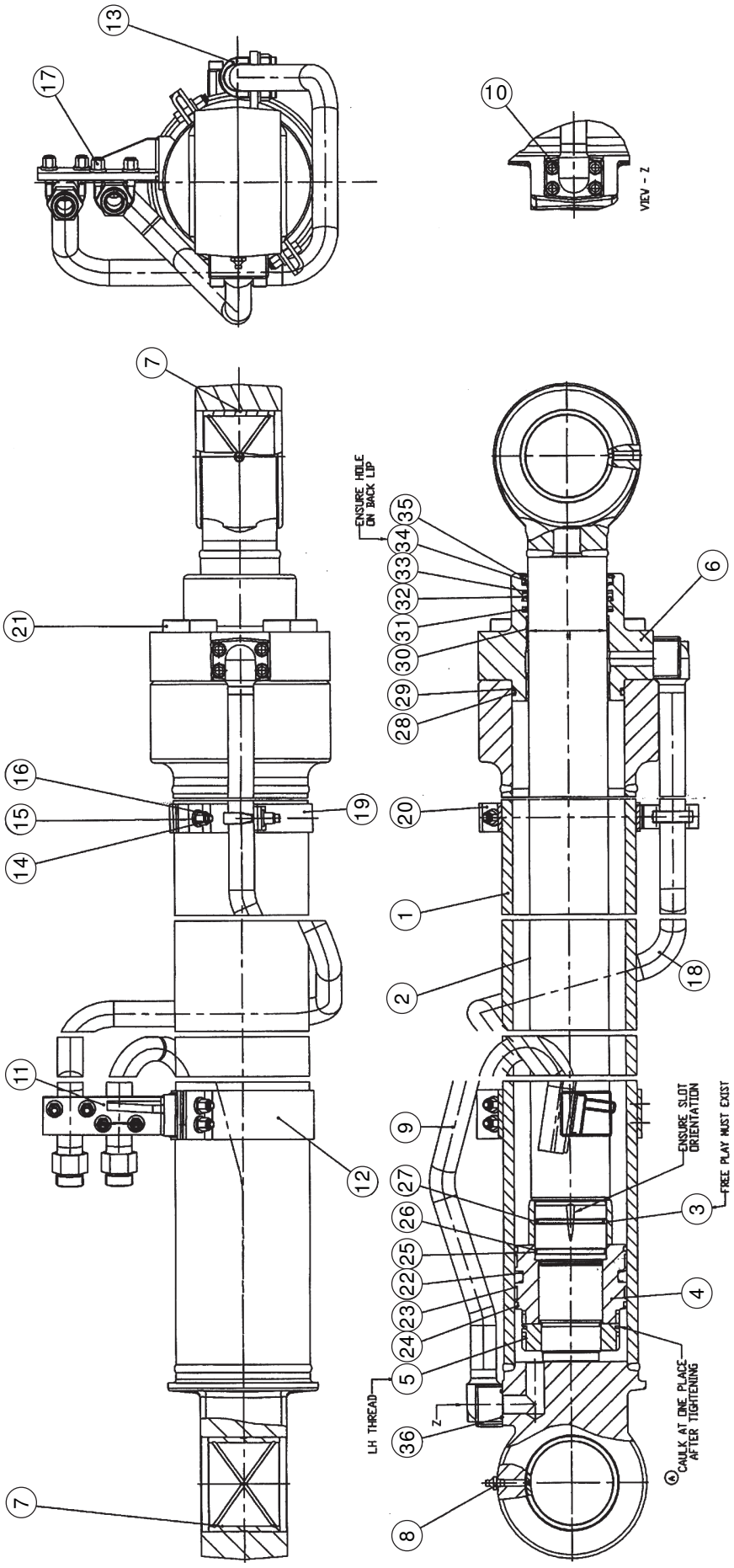

BOOM CYLINDER (RH)

ITEM	PART NO.	PART NAME	QTY	S.C.	MACHINE SERIAL NO. ONWARDS	ICA	REPLACEABLE PART	
							PART NO.	QTY
--	**TC01577**	**BOOM CYLINDER (RH)**	**1**					
1	TC01577/1	TUBE S/A	1					
2	TC01577/2	PISTON ROD S/A	1					
3	TC01577/3	H.E. CUS. BUSH	1					
4	TC01577/4	PISTON	1					
5	TC01577/5	PISTON ROD NUT	1					
6	TC01577/6	HEAD END COVER	1					
7	TC01577/7	BUSH	2					
8	TC01577/8	GREASE NIPPLE	1					
9	TC01577/9	PIPE *S*/A CE (RH)	1					
10	TC01577/10	HEX.SOC.HD.CAP SCREW	8					
11	TC01577/11	CLAMP *S*/A (RH)	1					
12	TC01577/12	CLAMP	1					
13	TC01577/13	CLAMP	3					
14	TC01577/14	HEX.HD.BOL T	6					
15	TC01577/15	WASHER	12					
16	TC01577/16	NYLOC NUT	6					
17	TC01577/17	NYLOC NUT	6					
18	TC01577/18	PIPE *S/*A HE (RH)	1					
19	TC01577/19	CLAMP *S/A*	1					
20	TC01577/20	CLAMP	1					
21	TC01577/21	HEX.SOC.HD.CAP SCREW	8					
: 22	TC01577/22	PISTON SEAL	1					
23	TC01577/23	PISTON BEARING	2					
24	TC01577/24	PISTON BEARING	2					
25	TC01577/25	O-RING	1					
26	TC01577/26	BACK-UP RING	2					
27	TC01577/27	CUSHION SEAL	1					
28	TC01577/28	O-RING	1					
29	TC01577/29	BACK UP RING	1					
30	TC01577/30	BIMETAL BUSH	1					
31	TC01577/31	ROD SEAL	1					
32	TC01577/32	ROD SEAL	1					
33	TC01577/33	BACK-UP RING (ROD SEAL)	1					
34	TC01577/34	WIPER	1					
35	TC01577/35	SNAP RING	1					
36	TC01577/36	O-RING	2					
--	TC01577	SEAL KIT						

ARM CYLINDER

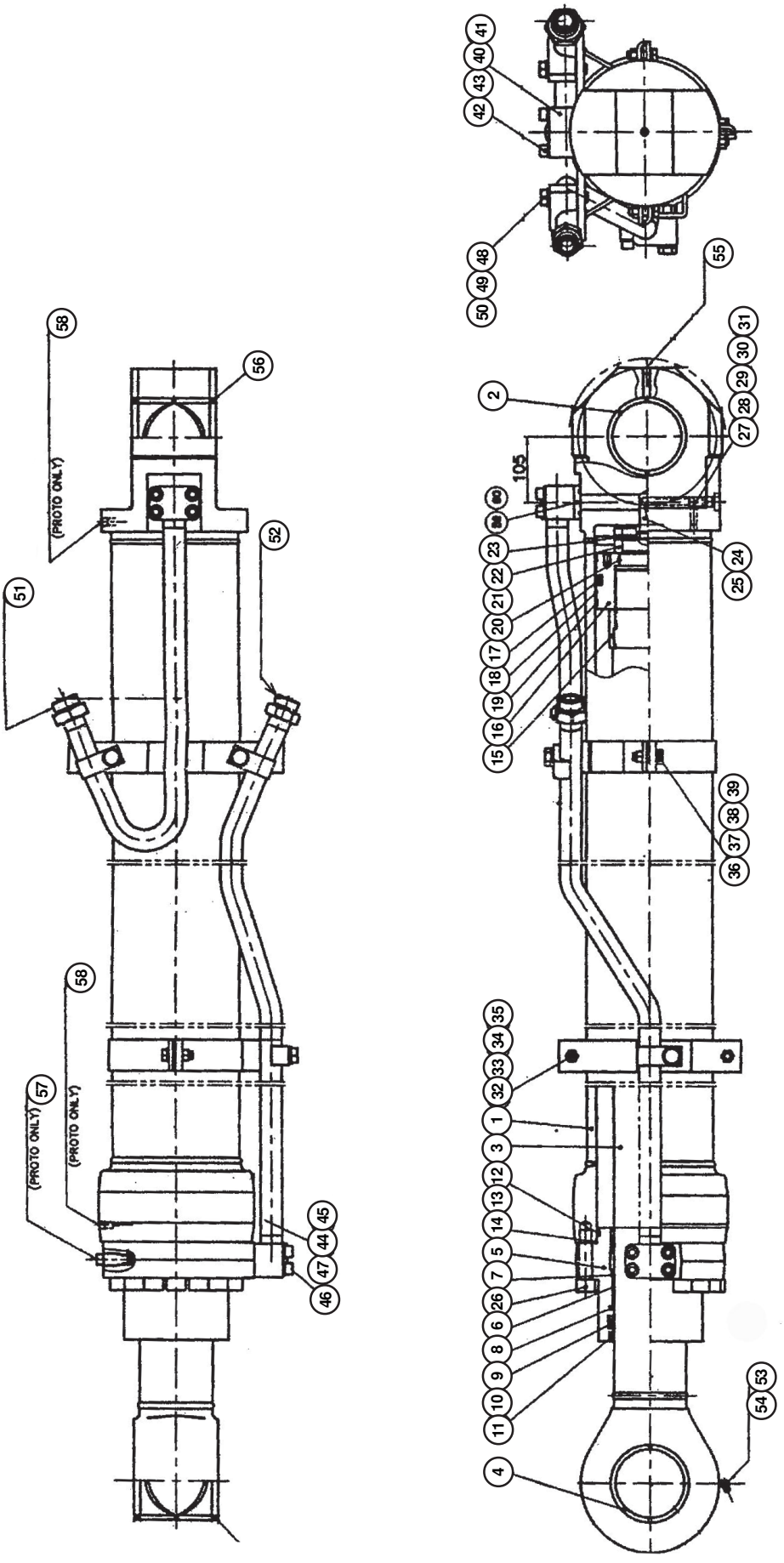

ARM CYLINDER

ITEM	PART NO.	PART NAME	QTY	S.C.	MACHINE SERIAL NO. ONWARDS	ICA	REPLACEABLE PART	
							PART NO.	QTY
--	TD04938	ARM CYL	1					
01	TD04938/1	TUBE ASSEMBLY	1					
2	TD04938/2	BUSH, STEEL	1					
3	TD04938/3	ROD ASSY	1					
4	TD04938/4	BUSH STEEL	1					
5	TD04938/5	ROD COVER	1					
6	TD04938/6	DD BUSH	1					
7	TD04938/7	RING RETAINING	1					
8	TD04938/8	SEAL BUFFER	1					
9	TD04938/9	U-PACKING	1					
10	TD04938/10	RING BACKUP	1					
11	TD04938/11	WIPER DUST	1					
12	TD04938/12	O-RING	1					
13	TD04938/13	RING BACKUP	1					
14	TD04938/14	O-RING	1					
15	TD04938/15	RING CUSHION	1					
16	TD04938/16	PISTON	1					
17	TD04938/17	SEAL SLIPPER	1					
18	TD04938/18	RING;WEAR	1					
19	TD04938/19	RING SLYD	1					
20	TD04938/20	O-RING	1					
21	TD04938/21	RING BACKUP	1					
22	TD04938/22	NUT PISTON	1					
23	TD04938/23	SCREW SET	1					
24	TD04938/24	PLUNGER;CUSHION	1					
25	TD04938/25	RING STOP	1					
26	TD04938/26	BOLT HEX SOCKET	1					
27	TD04938/27	VALVE CHECK	1					
28	TD04938/28	SPRING	1					
29	TD04938/29	SUPPORT SPRING	1					
30	TD04938/30	PLUG	1					
31	TD04938/31	O-RING	1					
32	TD04938/32	PIPE BAND ASSY-R	1					
33	TD04938/33	BAND PIPE	1					
34	TD04938/34	WASHER SPRING	1					
35	TD04938/35	BOLT HEX	1					
36	TD04938/36	PIPE BAND ASSY-H	1					
37	TD04938/37	BAND PIPE	1					
38	TD04938/38	WASHER SPRING	1					
39	TD04938/39	BOLT HEX	1					
40	TD04938/40	PIPE ASSY-H	1					
41	TD04938/41	O-RING	1					
42	TD04938/42	WASHER SPRING	1					
43	TD04938/43	BOLT HEX SOCKET	1					

Contd. to Next Page.

ARM CYLINDER

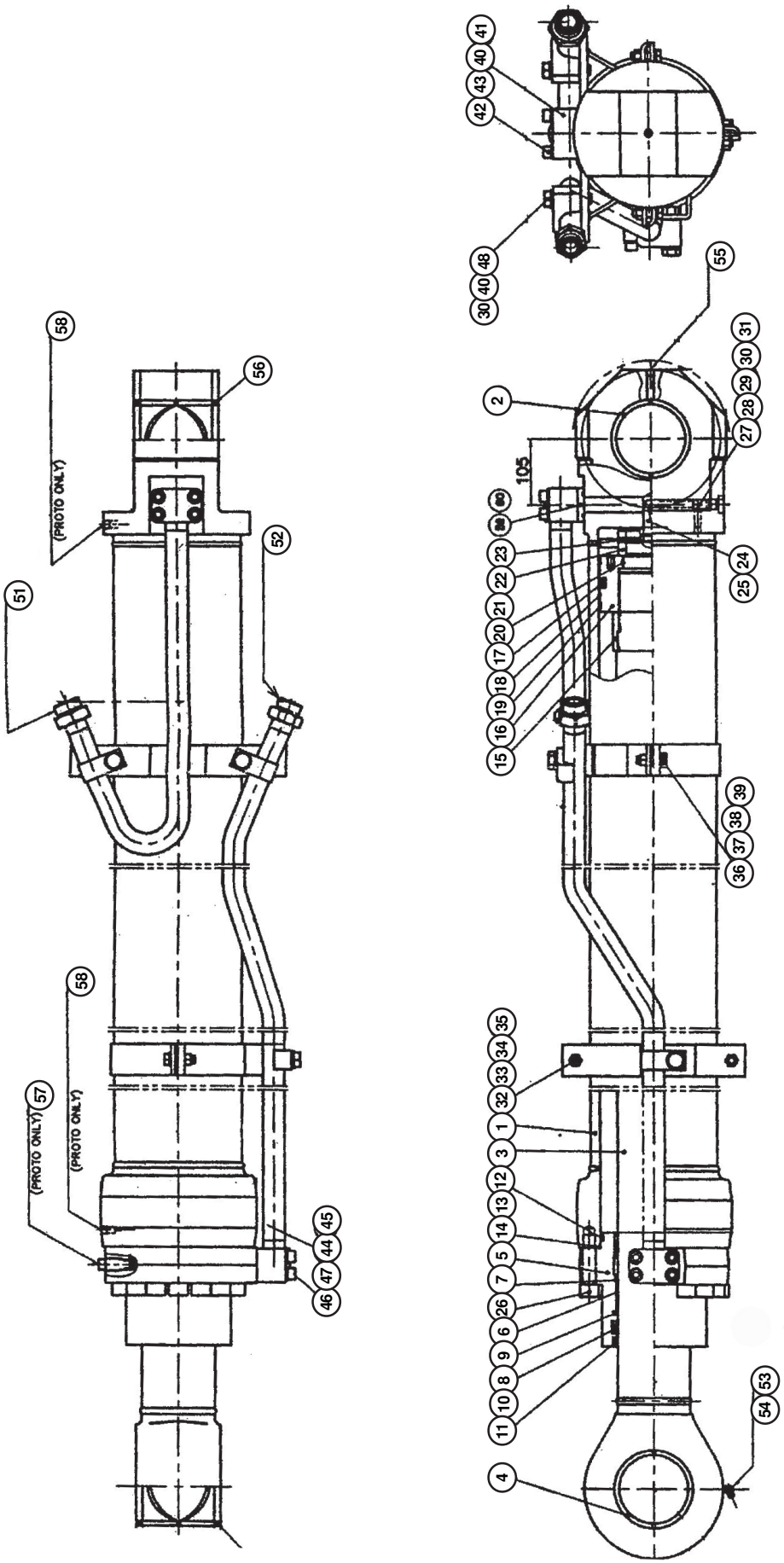

ARM CYLINDER

ITEM	PART NO.	PART NAME	QTY	S.C.	MACHINE SERIAL NO. ONWARDS	ICA	REPLACEABLE PART	
							PART NO.	QTY
44	TD04938/44	PIPE ASSY - R	1					
45	TD04938/45	O-RING	1					
46	TD04938/46	WASHER SPRING	1					
47	TD04938/47	BOLT HEX SOCKET	1					
48	TD04938/48	CLAMP PIPE	1					
49	TD04938/49	WASHER SPRING	1					
50	TD04938/50	BOLT HEX	1					
51	TD04938/51	CAP STEEL	1					
52	TD04938/52	CAP DUST	1					
53	TD04938/53	NIPPLE GREASE	1					
54	TD04938/54	CAP NIPPLE	1					
55	TD04938/55	CAP NIPPLE	1					
56	TD04938/56	WIPER PIN	1					
57	TD04938/57	ORIFICE	1					
58	TD04938/58	PLUG HEX SOCKET	1					
59	TD04938/59	SPACER	1					
60	TD04938/60	O-RING	1					
61	TE07083	SEAL KIT	1					

CYLINDER ARM

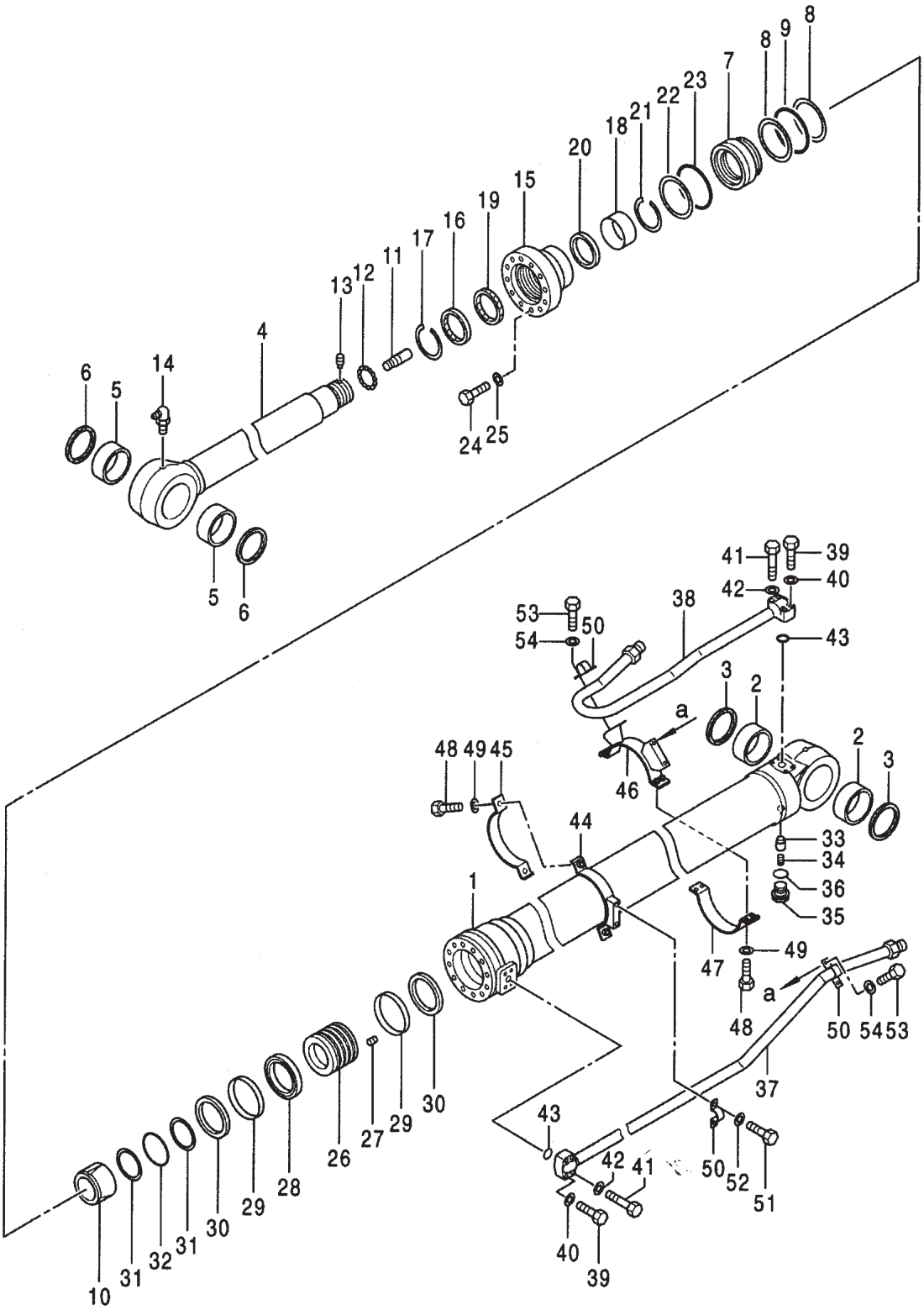

100 { 3~2, 6~2, 8~2, 9~1, 16~1, 19~1, 20~1, 22~1, 23~1, 28~1, 29~2, 31~2, 32~2, 36~1, 43~2

CYLINDER ARM

ITEM	PART NO.	PART NAME	QTY	S.C.	MACHINE SERIAL NO. ONWARDS	ICA	REPLACEABLE PART	
							PART NO.	QTY
--	**4611472**	**CYLINDER :ARM**	**1**				**9292426**	**1**
1-36	0961401	CYLINDER	1					
1	0961402	TUBE: CYLINDER	1					
2	4381859	BUSHING	2					
3	4085479	SEAL: DUST	2	K				
4	0961403	ROD:PISTON	1					
5	4381859	BUSHING	2					
6	4085479	SEAL: DUST	2	K				
7	0961404	COLLAR	1					
8	0961405	RING: BACK-UP	2	K				
9	0961406	O-RING	1	K				
10	0961407	PLUNGER	1					
11	0961408	PLUNGER	1					
12	0961409	BALL	12					
13	0961410	CAP	1					
14	0961411	FITTING:GREASE	1					
15	0961412	HEAD:CYL.	1					
16	0961413	SEAL:DUST	1	K				
17	0961414	RING:RETAINING	1					
18	0961415	BUSHING	1					
19	0961416	PACKING	1	K				
20	0961417	RING	1	K				
21	0961210	RING:RETAINING	1					
22	0961405	RING:BACK-UP	1	K				
23	0961406	O-RING	1	K				
24	0961418	BOLT	12					
25	0961419	WASHER	12					
26	0961420	PISTON	1					
27	0961421	SCREW	1					
28	0961422	RING:PISTON	1	K				
29	0961423	RING:WEAR	2	K				
30	0961424	RING	2					
31	0961425	RING;BACK-UP	2	K				
32	0961426	O-RING	1	K				
33	0961427	VALVE	1					
34	0961428	SPR I NG	1					
35	0961429	PLUG	1					
36	0961430	O-RING	1	K				
37	0961431	PIPE	1					
38	0961432	PIPE	1					
39	0961226	BOLT	4					
40	0961227	WASHER	4					
41	0961228	BOLT	4					
42	0961227	WASHER	4					
43	0961229	O-RING	2	k				
44	0961433	BRACKET	1					
45	0961434	BAND	1					
46	0961435	BRACKET	1					
47	0961436	BAND	1					
48	0961437	BOLT	6					
49	0961227	WASHER	6					
50	0961438	CLAMP	3					
51	0961439	BOLT	2					
52	0961236	WASHER	2					
53	0961440	BOLT	4					
54	0961236	WASHER	4					
100	4640118	KIT; SEAL	1					

ARM CYLINDER

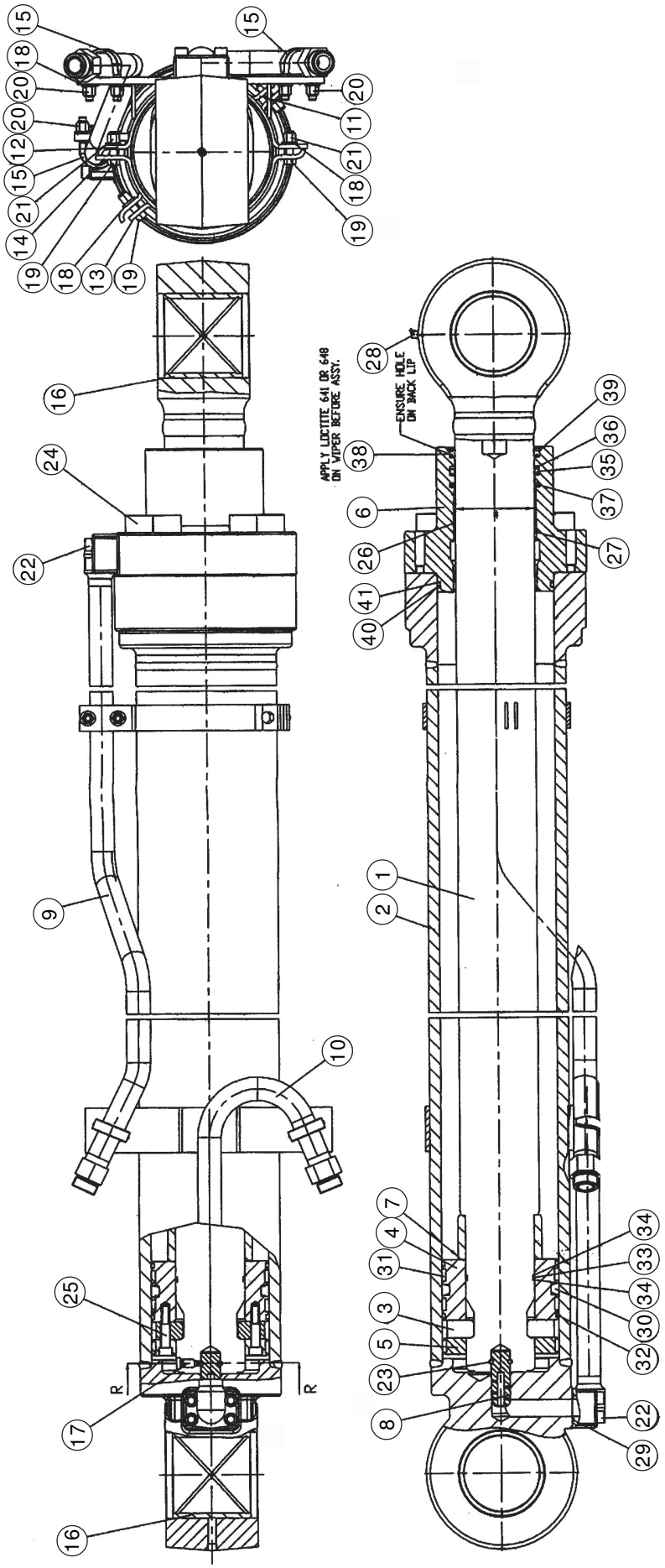

ARM CYLINDER

ITEM	PART NO.	PART NAME	QTY	S.C.	MACHINE SERIAL NO. ONWARDS	ICA	REPLACEABLE PART	
							PART NO.	QTY
--	**TC01578**	**ARM CYLINDER**	**1**					
1	TC01578/1	PISTON ROD *SI* A	1					
2	TC01578/2	TUBE S/A	1					
3	TC01578/3	SPACER	1					
4	TC01578/4	PISTON	1					
5	TC01578/5	PISTON	1					
6	TC01578/6	HEAD END COVER	1					
7	TC01578/7	H.E CUSH BUSH	1					
,8	TC01578/8	C,E.CUSH.BUSH	1					
9	TC01578/9	PIPE SA	1					
10	TC01578/10	PIPE S/A	1					
11	TC01578/11	CLAMP S/A	1					
12	TC01578/12	CLAMP *S/A*	1					
13	TC01578/13	CLAMP	1					
14	TC01578/14	CLAMP	1					
15	TC01578/15	CLAMP	3					
16	TC01578/16	BUSH	2					
17	TC01578/17	HEX.SOC SET SCRE\J	1					
18	TC01578/18	WASHER	12					
19	TC01578/19	HEX.HD.BOLT	6					
20	TC01578/20	NYLOC NUT	6					
21	TC01578/21	NYLOC NUT	6					
22	TC01578/22	HEX.SOC.HD,CAP SCREW	8					
23	TC01578/23	STEEL BALL	13					
24	TC01578/24	HEX.SOC.HD.SCREW	8					
25	TC01578/25	HEX.SOC.HD.SCREW	6					
26	TC01578/26	BIMETAL BUSH	1					
27	TC01578/27	SNAP RING	1					
28	TC01578/28	GREASE NIPPLE	1					
29	TC01578/29	O-RING	2					
30	TC01578/30	PISTON SEAL	1					
31	TC01578/31	PISTON BEARING	3					
32	TC01578/32	PISTON BEARING	2					
33	TC01578/33	O-RING (HEC)	1					
34	TC01578/34	BACKUP RING	2					
35	TC01578/35	ROD SEAL	1					
36	TC01578/36	BACK -UP RING	1					
37	TC01578/37	ROD SEAL	1					
38	TC01578/38	WIPER	1					
39	TC01578/39	SNAP RING	1					
40	TC01578/40	O-RING	1					
41	TC01578/41	BACK UP RING	1					
--	TE07248	SEAL KIT						

BUCKET CYLINDER

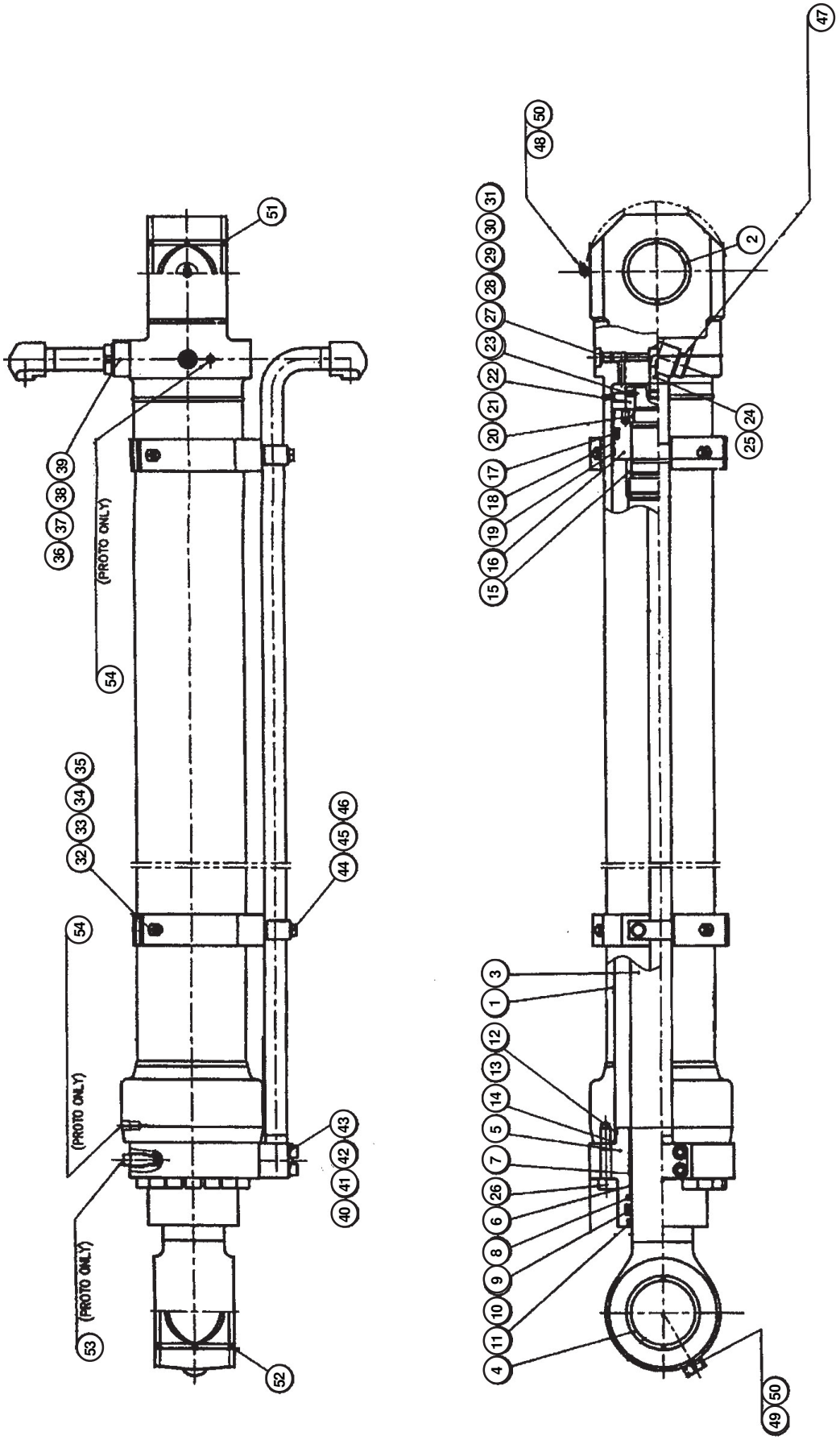

BUCKET CYLINDER

ITEM	PART NO.	PART NAME	QTY	S.C.	MACHINE SERIAL NO. ONWARDS	ICA	REPLACEABLE PART	
							PART NO.	QTY
--	TD04939	BUCKET CYL	1					
01	TD04939/1	TUBE ASSEMBLY	1					
2	TD04939/2	BUSH, STEEL	1					
3	TD04939/3	ROD ASSY	1					
4	TD04939/4	BUSH STEEL	1					
5	TD04939/5	ROD COVER	1					
6	TD04939/6	DD BUSH	1					
7	TD04939/7	RING RETAINING	1					
8	TD04939/8	SEAL BUFFER	1					
9	TD04939/9	U-PACKING	1					
10	TD04939/10	RING BACKUP	1					
11	TD04939/11	WIPER DUST	1					
12	TD04939/12	O-RING	1					
13	TD04939/13	RING BACKUP	1					
14	TD04939/14	O-RING	1					
15	TD04939/15	RING CUSHION	1					
16	TD04939/16	PISTON	1					
17	TD04939/17	SEAL SLIPPER	1					
18	TD04939/18	RING;WEAR	1					
19	TD04939/19	RING DUST	1					
20	TD04939/20	O-RING	1					
21	TD04939/21	RING BACKUP	1					
22	TD04939/22	NUT PISTON	1					
23	TD04939/23	SCREW SET	1					
24	TD04939/24	PLUNGER CUSHION	1					
25	TD04939/25	RING STOP	1					
26	TD04939/26	BOLT HEX SOCKET	1					
27	TD04939/27	VALVE CHECK	1					
28	TD04939/28	SPRING	1					
29	TD04939/29	SUPPORT SPRING	1					
30	TD04939/30	PLUG	1					
31	TD04939/31	O-RING	1					
32	TD04939/32	PIPE BAND ASSY	1					
33	TD04939/33	BAND PIPE	1					
34	TD04939/34	WASHER SPRING	1					
35	TD04939/35	BOLT HEX	1					
36	TD04939/36	PIPE ASSY - H	1					
37	TD04939/37	O-RING	1					
38	TD04939/38	WASHER SPRING	1					
39	TD04939/39	BOLT HEX SOCKET	1					
40	TD04939/40	PIPE ASSY-R	1					
41	TD04939/41	O-RING	1					
42	TD04939/42	WASHER SPRING	1					
43	TD04939/43	BOLT HEX SOCKET	1					
44	TD04939/44	CLAMP PIPE	1					
45	TD04939/45	WASHER SPRING	1					
46	TD04939/46	BOLT HEX	1					
47	TD04939/47	CAP DUST	1					
48	TD04939/48	NIPPLE GREASE	1					
49	TD04939/49	NIPPLE GREASE	1					
50	TD04939/50	CAP NIPPLE	1					
51	TD04939/51	WIPER PIN	1					
52	TD04939/52	WIPER PIN	1					
53	TD04939/53	ORIFICE	1					
54	TD04939/54	PLUG HEX SOCKET	1					
55	TE07084	SEAL KIT	1					

CYLINDER BUCKET

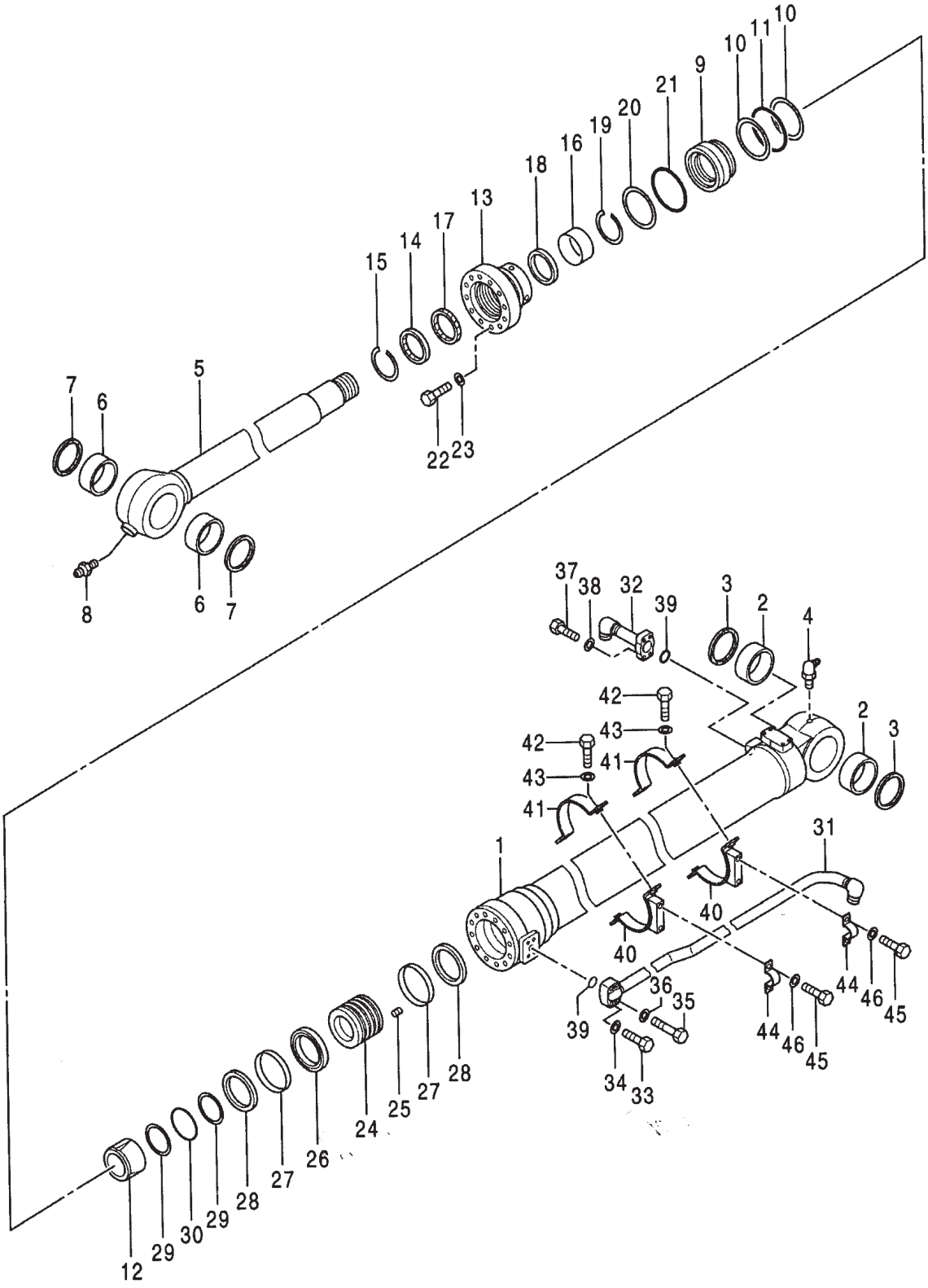

100 { 3~2, 7~2, 10~2, 11~1, 14~1, 17~1, 18~1, 20~1, 21~1, 26~1, 27~2, 29~2, 30~1, 39~1

CYLINDER BUCKET

ITEM	PART NO.	PART NAME	QTY	S.C.	MACHINE SERIAL NO. ONWARDS	ICA	REPLACEABLE PART	
							PART NO.	QTY
--	**4611475**	**CYLINDER ;BUCKET**	**1**				**9292427**	**1**
1-30	0961501	CYLINDER	1					
1	0961502	TUBE; CYL INDER	1					
2	4358100	BUSHING	2					
3	4067901	SEAL; DUST	2	K				
4	0961411	FITTING;GREASE	1					
5	0961503	ROO;PISTON	1					
6	4381857	BUSHING	2					
7	4074008	SEAL;OUST	2	K				
8	0920505	FITTING	1					
9	0961504	COLLAR	1					
10	0961505	RING;BACK-UP	2	K				
11	0961506	O-RING	1	K				
12	0961507	PLUNGER	1					
13	0961508	HEAD; CYL	1					
14	0961509	SEAL;OUST	1	K				
15	0961510	RING;RETAINING	1					
16	0961511	BUSHING	1					
17	0961512	PACKING	1	K				
18	0961513	RING	1	K				
19	0961514	RING;RETAINING	1					
20	0961505	RING;BACK-UP	1	K				
21	0961506	O-RING	1	K				
22	0961215	BOLT	12					
23	0961216	WASHER	12					
24	0961515	PISTON	1					
25	0961218	SCREW	1					
26	0961516	RING;PISTON	1	K				
27	0961517	RING;WEAR	2	K				
28	0961518	RING	2					
29	0961519	“RING;BACK-UP	2	K				
30	0961520	O-RING	1	K				
31	0961521	PIPE	1					
32	0961522	PIPE	1					
33	0961226	BOLT	2					
34	0961227	WASHER	2					
35	0961228	BOLT	2					
36	0961227	WASHER	2					
37	0961234	BOLT	4					
38	0961227	WASHER	4					
39	0961229	O-RING	2	K				
40	0961523	BRACKET	2					
41	0961524	BAND	2					
42	0961525	BOLT	4					
43	0961236	WASHER	4					
44	0961438	CLAMP	2					
45	0961526	BOLT	4					
46	0961236	WASHER	4					
100	4640108	KIT; SEAL	1					

BUCKET CYLINDER

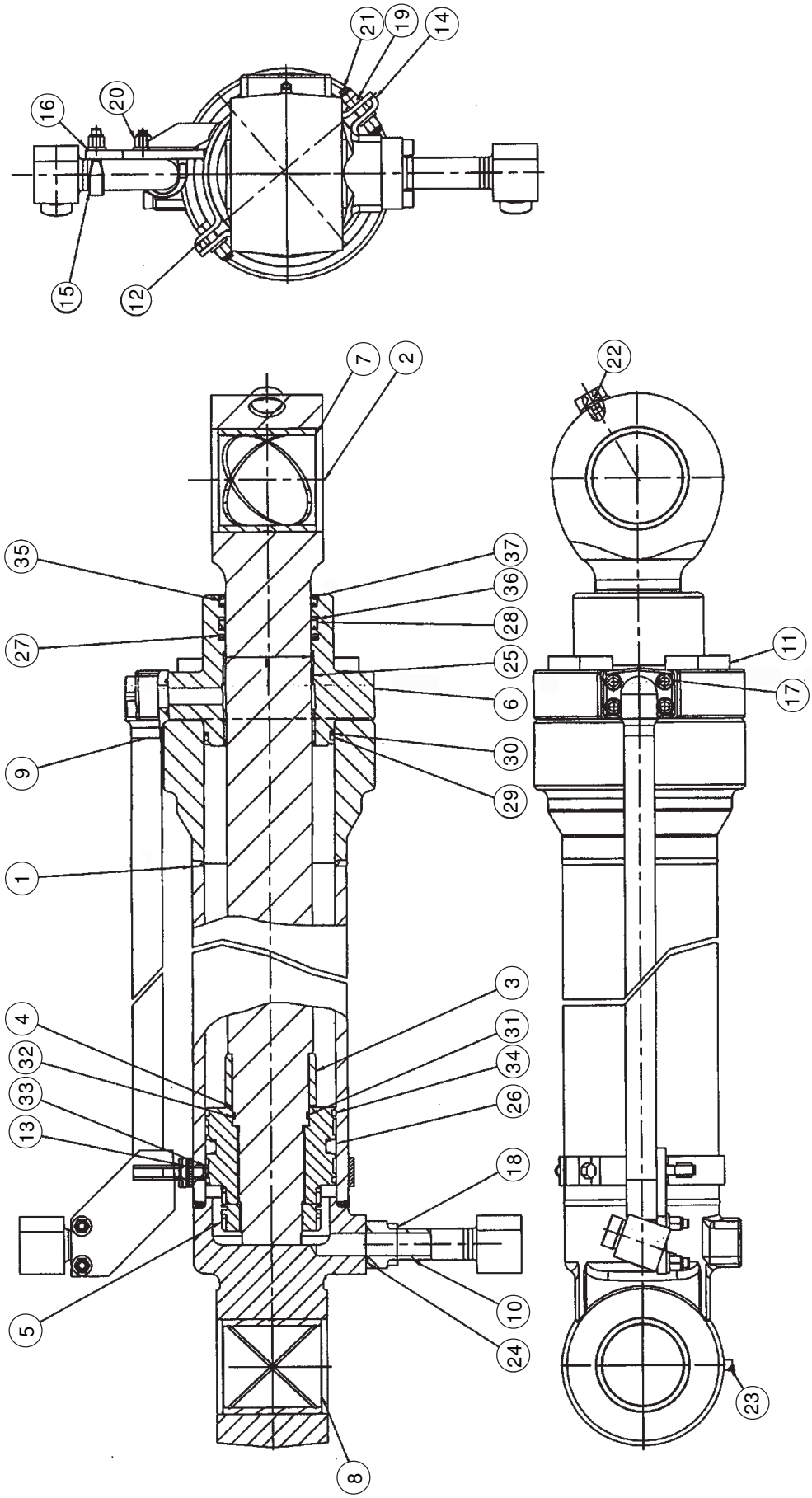

BUCKET CYLINDER

ITEM	PART NO.	PART NAME	QTY	S.C.	MACHINE SERIAL NO. ONWARDS	ICA	REPLACEABLE PART	
							PART NO.	QTY
--	TC01579	BUCKET CYLINDER	1					
1	TC01579/1	TUBE *S/A*	1					
2	TC01579/2	PISHIN ROD S/ A	1					
3	TC01579/3	H.E. CUSH BUSH	1					
4	TC01579/4	PISTON	1					
5	TC01579/5	PISTON ROD NUT	1					
6	TC01579/6	H.E. COVER	1					
7	TC01579/7	BUSH	1					
8	TC01579/8	BUSH	1					
9	TC01579/9	PIPE S/A (H.E)	1					
10	TC01579/10	PIPE S/A	1					
11	TC01579/11	HEX.SOC.HD.CAP SCREW	8					
12	TC01579/12	CLAMP *S/A*	1					
13	TC01579/13	CLAMP *S/A*	1					
14	TC01579/14	CLAMP	2					
15	TC01579/15	CLAMP	2					
16	TC01579/16	WASHER	8					
17	TC01579/17	HEX.SOC.HD.CAP SCREW	4					
18	TC01579/18	HEX.SOC.HD. SCREW	4					
19	TC01579/19	NYLOC NUT	4					
20	TC01579/20	NYLOC NUT	4					
21	TC01579/21	HEX. HD. BOL T	4					
22	TC01579/22	GREASE NIPPLE	1					
23	TC01579/23	GREASE NIPPLE	1					
24	TC01579/24	O-RING	2					
25	TC01579/25	BIMETAL BUSH	1					
26	TC01579/26	PISTON SEAL	1					
27	TC01579/27	ROD SEAL	1					
28	TC01579/28	ROD SEAL	1					
29	TC01579/29	O-RING	1					
30	TC01579/30	BACK UP RING	1					
31	TC01579/31	O-RING	1					
32	TC01579/32	BACK UP RING	2					
33	TC01579/33	PISTON BEARING	2					
34	TC01579/34	PISTON BEARING	2					
35	TC01579/35	VIPER	1					
36	TC01579/36	BACK UP RING	1					
37	TC01579/37	SNAP RING	1					
--	TE07249	SEAL KIT						

BLANK

BUCKET DETAILS

BUCKET 2.1 CU.M

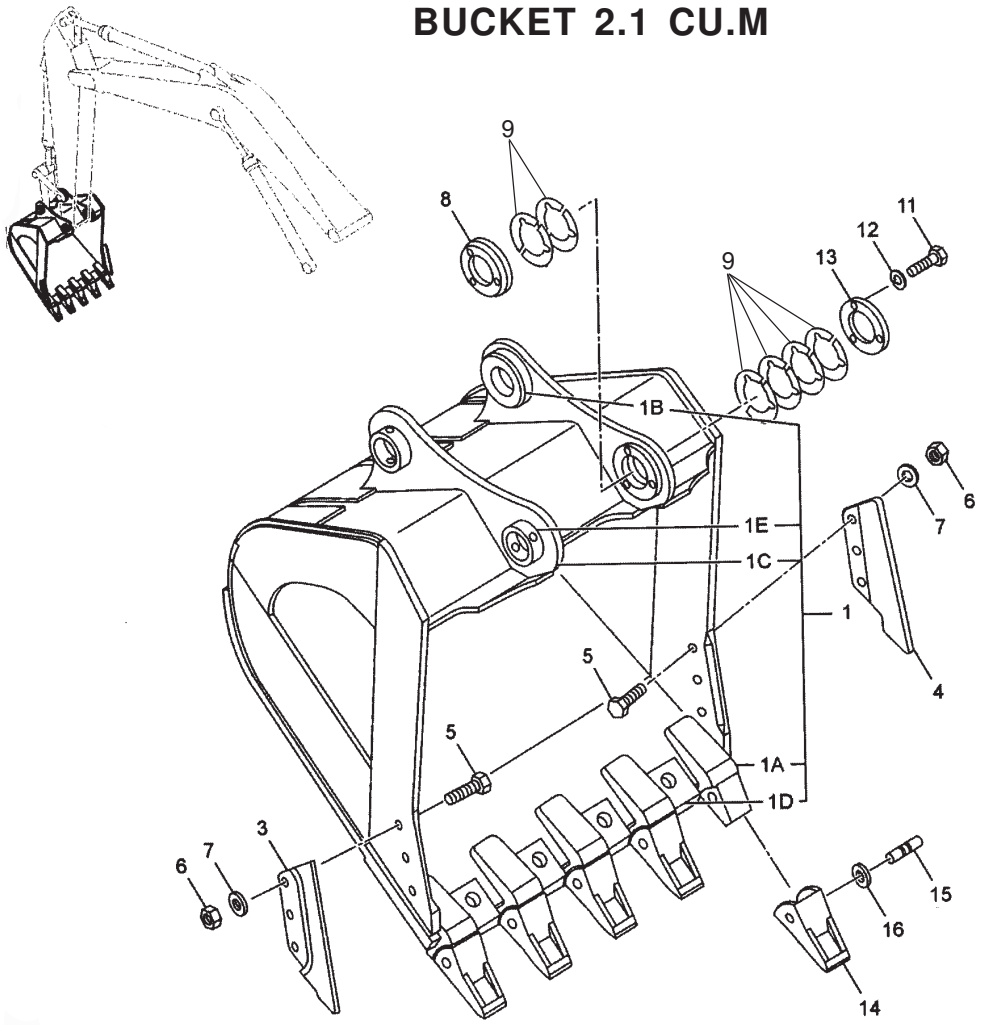

ITEM	PART NO.	PART NAME	QTY	S.C.	MACHINE SERIAL NO. ONWARDS	ICA	REPLACEABLE PART	
							PART NO.	QTY
--	**TD05304**	**BUCKET ASSEMBLY (2.1 CU.M)**	**1**					
1	TD05303	BUCKET;2.1 CU.M	1		0ACH-000001			
1A	TE06422	TOOTH ADAPTER	5		0ACH-000001			
1B	4225809	BOSS	2		0ACH-000001			
1C	4445243	BOSS	1		0ACH-000001			
1D	TE07177	SHROUD	4		0ACH-000001			
1E	4143531	STOPPER	2		0ACH-000001			
3	4286933	SHROUD	1		0ACH-000001			
4	4286934	SHROUD	1		0ACH-000001			
5	J932780	BOLT	6		0ACH-000001			
6	J951027	NUT	6		0ACH-000001			
7	4085857	WASHER	6		0ACH-000001			
8	4445247	BOSS	1		0ACH-000001			
9	4277930	SHIM	12		0ACH-000001			
11	J901495	BOLT	3		0ACH-000001			
12	A590914	WASHER;SPRING	3		0ACH-000001			
13	4277929	PLATE	1		0ACH-000001			
14	TE06423	TOOTH POINT	5		0ACH-000001			
15	TE04412	PIN	5		0ACH-000001			
16	TE03584	WASHER	5		0ACH-000001			

BUCKET ASSY. 1.7 CU.M

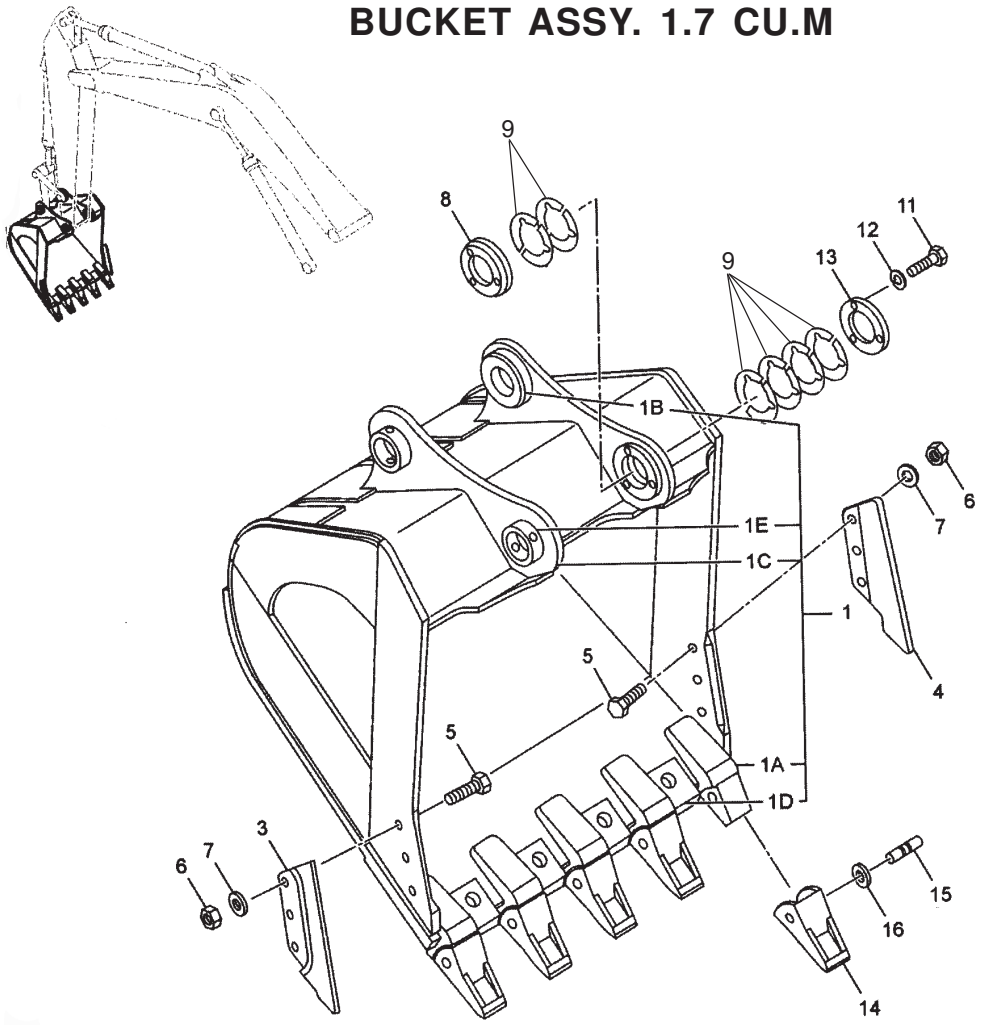

ITEM	PART NO.	PART NAME	QTY	S.C.	MACHINE SERIAL NO. ONWARDS	ICA	REPLACEABLE PART	
							PART NO.	QTY
--	**TD05369**	**BUCKET ASSEMBLY (1.7CU.M)**	**1**					
1	TD05368	BUCKET ASSY(1.7 CU.M PCSA)			0ACH-000001			
1A	TE06422	TOOTH ADAPTER	5		0ACH-000001			
1B	4225809	BOSS	2		0ACH-000001			
1C	4445243	BOSS	1		0ACH-000001			
1D	TE07177	SHROUD	4		0ACH-000001			
1E	4143531	STOPPER	2		0ACH-000001			
3	4286933	SHROUD	1		0ACH-000001			
4	4286934	SHROUD	1		0ACH-000001			
5	J932780	BOLT	6		0ACH-000001			
6	J951027	NUT	6		0ACH-000001			
7	4085857	WASHER	6		0ACH-000001			
8	4445247	BOSS	1		0ACH-000001			
9	4277930	SHIM	12		0ACH-000001			
11	J901495	BOLT	3		0ACH-000001			
12	A590914	WASHER;SPRING	3		0ACH-000001			
13	4277929	PLATE	1		0ACH-000001			
14	TE06423	TOOTH POINT	5		0ACH-000001			
15	TE04412	PIN	5		0ACH-000001			
16	TE03584	WASHER	5		0ACH-000001			

BUCKET ASSY. 1.5 CU.M

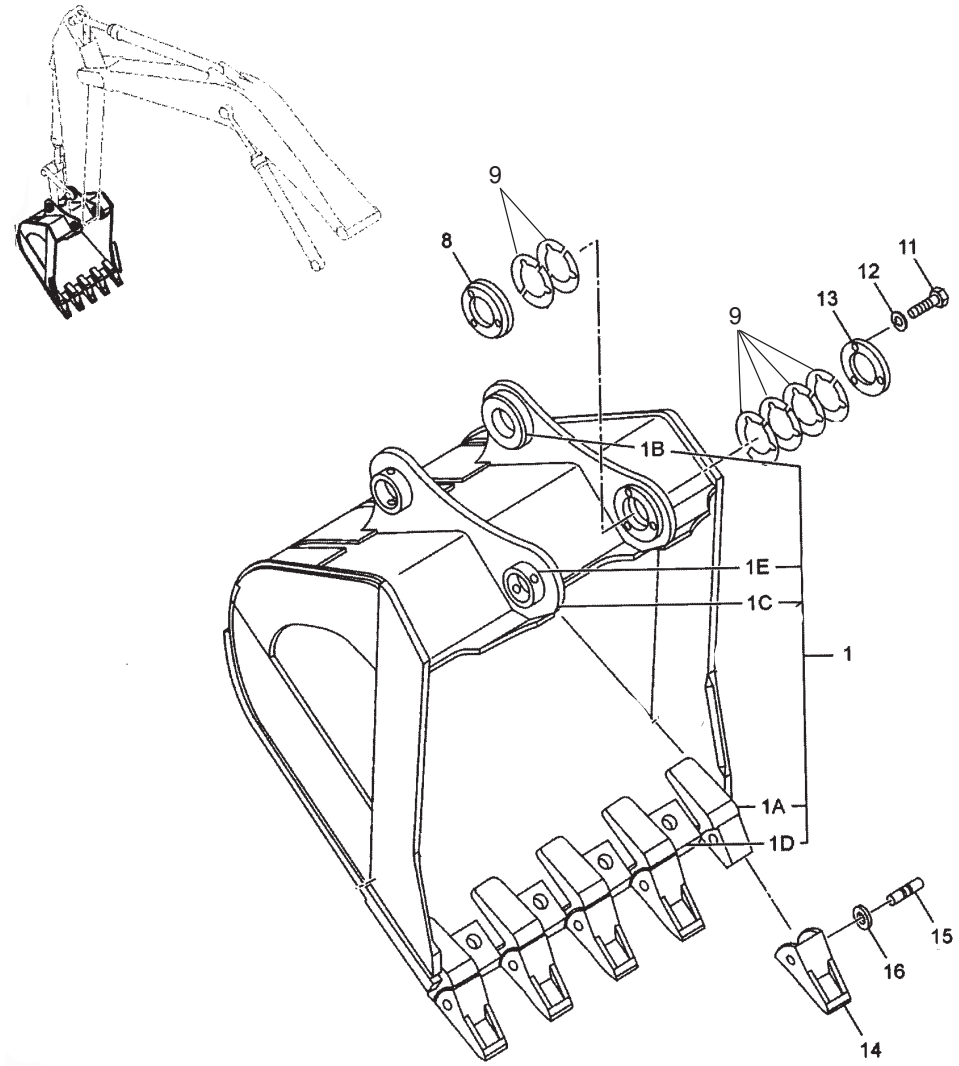

ITEM	PART NO.	PART NAME	QTY	S.C.	MACHINE SERIAL NO. ONWARDS	ICA	REPLACEABLE PART	
							PART NO.	QTY
--	**TD05377**	**BUCKET ASSEMBLY (1.5CU.M)**	**1**					
1	TD05378	BUCKET ASSY(1.5 CU.M PCSA)	1		0ACH·000001			
1A	TE06422	TOOTH ADAPTER	5		0ACH·000001			
1B	4225809	BOSS	2		0ACH·000001			
1C	4445243	BOSS	1		0ACH·000001			
1D	TE07177	SHROUD	4		0ACH·000001			
1E	4143531	STOPPER	2		0ACH·000001			
8	4445247	BOSS	1		0ACH·000001			
9	4277930	SHIM	12		0ACH·000001			
11	J901495	BOLT	3		0ACH·000001			
12	A590914	WASHER;SPRING	3		0ACH·000001			
13	4277929	PLATE	1		0ACH·000001			
14	TE06423	TOOTH POINT	5		0ACH·000001			
15	TE04412	PIN	5		0ACH·000001			
16	TE03584	WASHER	5		0ACH·000001			

BUCKET ASSY. 1.3 CU.M

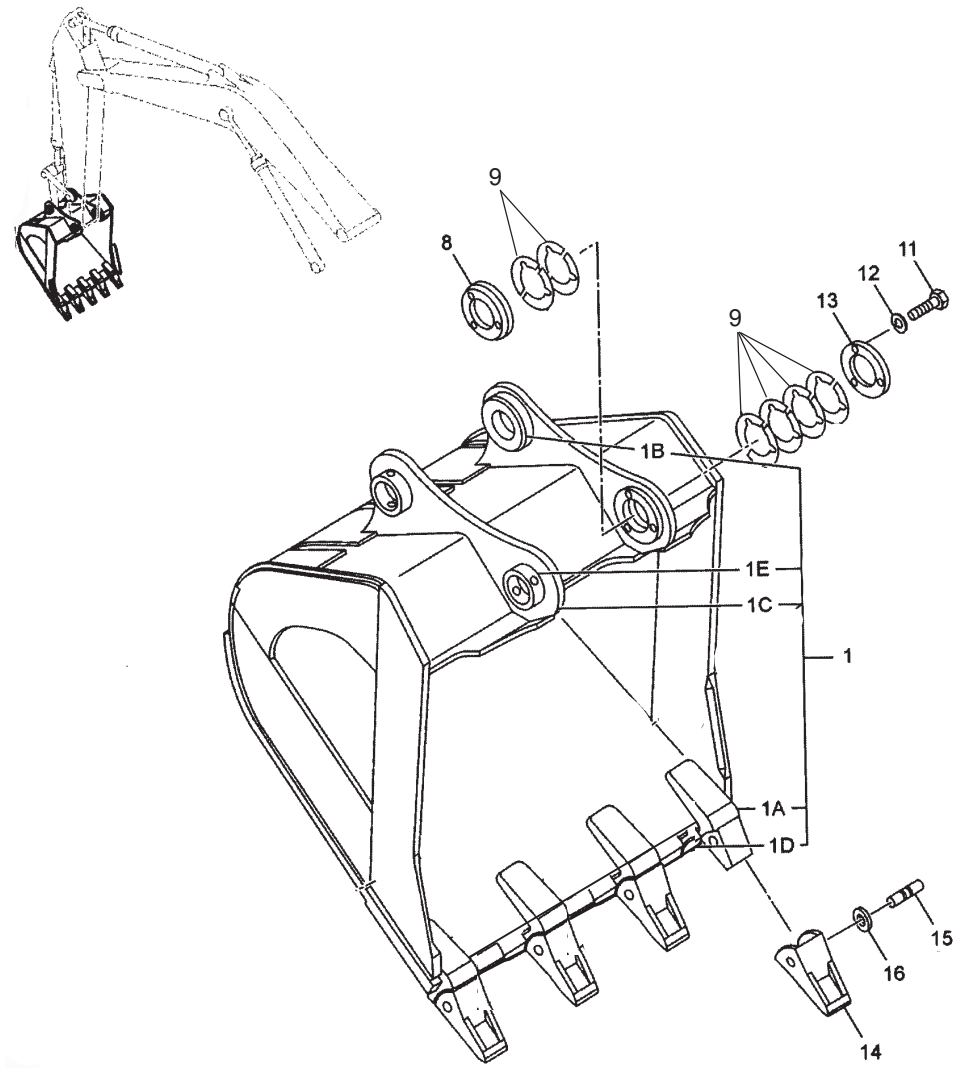

ITEM	PART NO.	PART NAME	QTY	S.C.	MACHINE SERIAL NO. ONWARDS	ICA	REPLACEABLE PART	
							PART NO.	QTY
--	**TD05567**	**BUCKET ASSEMBLY (1.3 CU.M)**	**1**					
1	TD05566	BUCKET ASSY. (1.3 CU.M-GRNITE)	1		0ACH·000001			
1A	TE06422	TOOTH ADAPTER	4		0ACH·000001			
1B	4225809	BOSS	2		0ACH·000001			
1C	4445243	BOSS	1		0ACH·000001			
1D	TE07177	SHROUD	4		0ACH·000001			
1E	4143531	STOPPER	2		0ACH·000001			
8	4445247	BOSS	1		0ACH·000001			
9	4277930	SHIM	12		0ACH·000001			
11	J901495	BOLT	3		0ACH·000001			
12	A590914	WASHER;SPRING	3		0ACH·000001			
13	4277929	PLATE	1		0ACH·000001			
14	TE06423	TOOTH POINT	4		0ACH·000001			
15	TE04412	PIN	4		0ACH·000001			
16	TE03584	WASHER	4		0ACH·000001			

BLANK

OTHER DETAILS

TOOLS

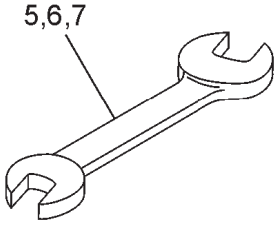

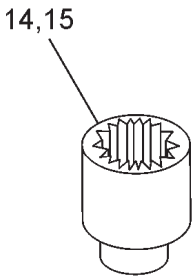

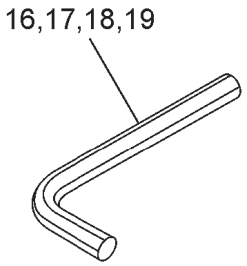

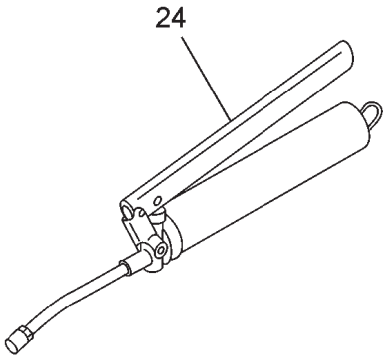

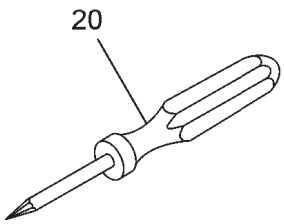

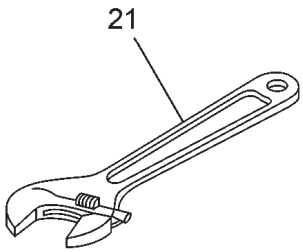

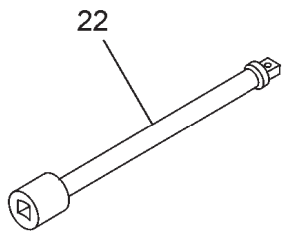

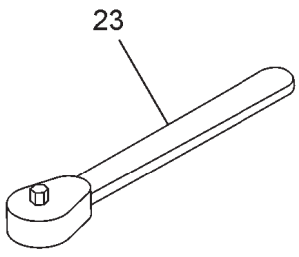

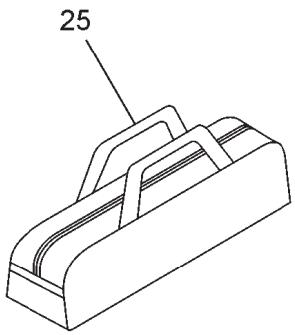

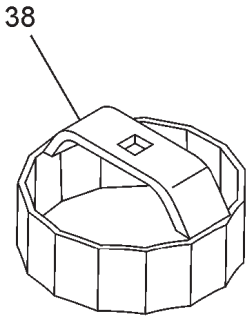

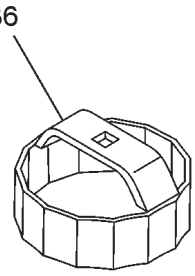

TOOLS

ITEM	PART NO.	PART NAME	QTY	S.C.	MACHINE SERIAL NO. ONWARDS	ICA	REPLACEABLE PART	
							PART NO.	QTY
--	**TE07282**	**TOOLS**	--					
01	4922685	HAMMER	1		0ACH-000001			
2	Z924327	JUG;OIL	1		0ACH-000001			
3	Z989852	WRENCH;SOCKET	1		0ACH-000001			
4	Z989861	SPANNER	1		0ACH-000001			
5	4200435	SPANNER	1		0ACH-000001			
6	4200436	SPANNER	1		0ACH-000001			
7	Z989858	SPANNER	1		0ACH-000001			
8	Z989859	SPANNER	1		0ACH-000001			
9	Z989860	SPANNER	1		0ACH-000001			
10	Z958407	WRENCH:T	1		0ACH-000001			
11	Z934574	SPANNER	1		0ACH-000001			
12	4202312	PIPE	1		0ACH-000001			
13	4004229	WRENCH;BAR	1		0ACH-000001			
14	4200437	WRENCH;SOCKET	1		0ACH-000001			
15	Z989850	WRENCH;SOCKET	1		0ACH-000001			
16	4020977	WRENCH;BAR	1		0ACH-000001			
17	Z985710	WRENCH;BAR	1		0ACH-000001			
18	Z958393	WRENCH;BAR	1		0ACH-000001			
19	Z958394	WRENCH;BAR	1		0ACH-000001			
20	4200434	SCREW;DRIVER	1		0ACH-000001			
21	4200438	WRENCH;ADJUST	1		0ACH-000001			
22	Z936010	BAR;EXTENSION	1		0ACH-000001			
23	Z985706	HANDLE;RATCHET	1		0ACH-000001			
24	TE01456	GREASE UNIT	1		0ACH-000001			
25	206058500102	ASSY. TOOL BOX	1		0ACH-000001			
26	35011200166	BIHEX SOCKET SPANNER	1		0ACH-000001			
27	35011200182	BIHEX SOCKET	1		0ACH-000001			
28	35011200212	BIHEX SOCKET	1		0ACH-000001			
30	Z947309	WRENCH;SOCKET	1		0ACH-000001			
31	35011210340	BIHEX SOCKET SPANNER	1		0ACH-000001			
32	Z947310	WR; SOCKET	1		0ACH-000001			
33	35012016181	SPANNER DEGP	1		0ACH-000001			
34	35012018213	SPANNER DEGP	1		0ACH-000001			
35	Z989853	WRENCH;SOCKET	1		0ACH-000001			
36	4213356	WRENCH	1		0ACH-000001			
38	4239943	WRENCH	1		0ACH-000001			
39	21Z1	PAD LOCK & KEY	1		0ACH-000001			

NAME PLATE ASSY.

1



2



4

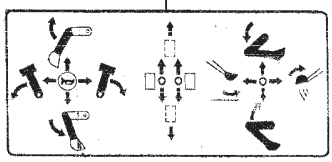

5



6

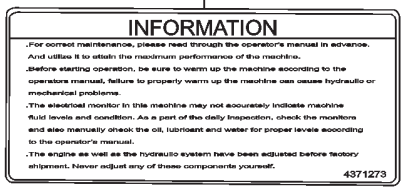

7

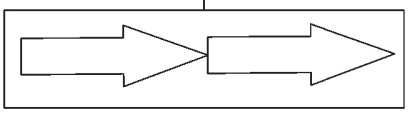

8

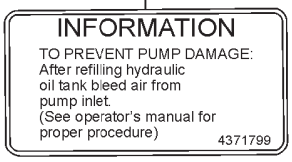

9

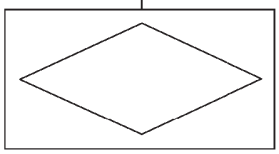

10

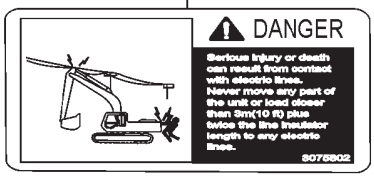

11



12

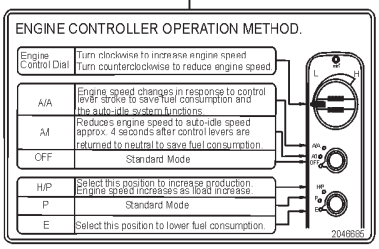

13



14

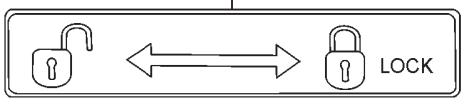

15

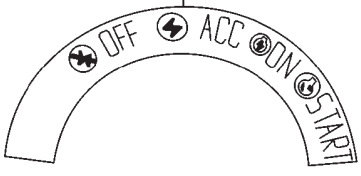

19



22

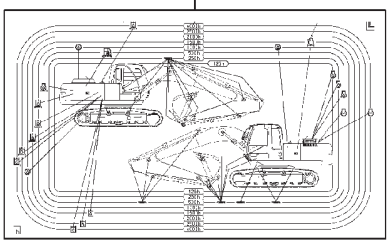

23

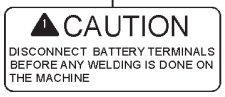

NAME PLATE ASSY.

ITEM	PART NO.	PART NAME	QTY	S.C.	MACHINE SERIAL NO. ONWARDS	ICA	REPLACEABLE PART	
							PART NO.	QTY
--	**TE07217**	**NAME PLATE ASSY.**	**--**					
1	TB01477	NAME-PLATE	2		0ACH-000001			
2	TC21093	DECAL TATA HITACHI	1		0ACH-000001			
3	4073519	TAPE;150 X 400	10		0ACH-000001			
4	4373205	NAME-PLATE	1		0ACH-000001			
5	4359076	NAME PLATE (EMERGENCY HAMMER)	1		0ACH-000001			
6	4371273	NAME-PLATE	1		0ACH-000001			
7	4201788	NAME-PLATE	1		0ACH-000001			
8	4371799	NAME-PLATE	1		0ACH-000001			
9	4040580	REFLECTOR	2		0ACH-000001			
10	3075802	NAME-PLATE	1		0ACH-000001			
11	3076197	NAME-PLATE	1		0ACH-000001			
12	2046685	NAME PLATE (ENGINE CONTROL)	1		0ACH-000001			
13	2035960	NAME-PLATE	2		0ACH-000001			
14	4299059	NAME-PLATE	1		0ACH-000001			
15	4264805	NAME-PLATE	1		0ACH-000001			
16	3220Z38D3	BLIND RIVET	4		0ACH-000001			
17	TD09464	NAME PLATE	1		0ACH-000222			
18	4336494	NAME PLATE	1		0ACH-000001			
19	3077560	NAME-PLATE	1		0ACH-000001			
20	3092350	SAFETY-SIGN	2		0ACH-000001			
21	3092351	SAFETY-SIGN	1		0ACH-000001			
22	2046877	NAME-PLATE (MAINTENANCE)	1		0ACH-000001			
23	TD09573	NAME PLATE; WELDING CAUTION	1		0ACH-000001			
24	TD05779	NAME-PLATE	1		0ACH-000015			
25	2046132	NAME-PLATE	1		0ACH-000015			
26	TC21094	DECAL TATA HITACHI (BOOM)	2		0ACH-000015			

EMERGENCY SPARES

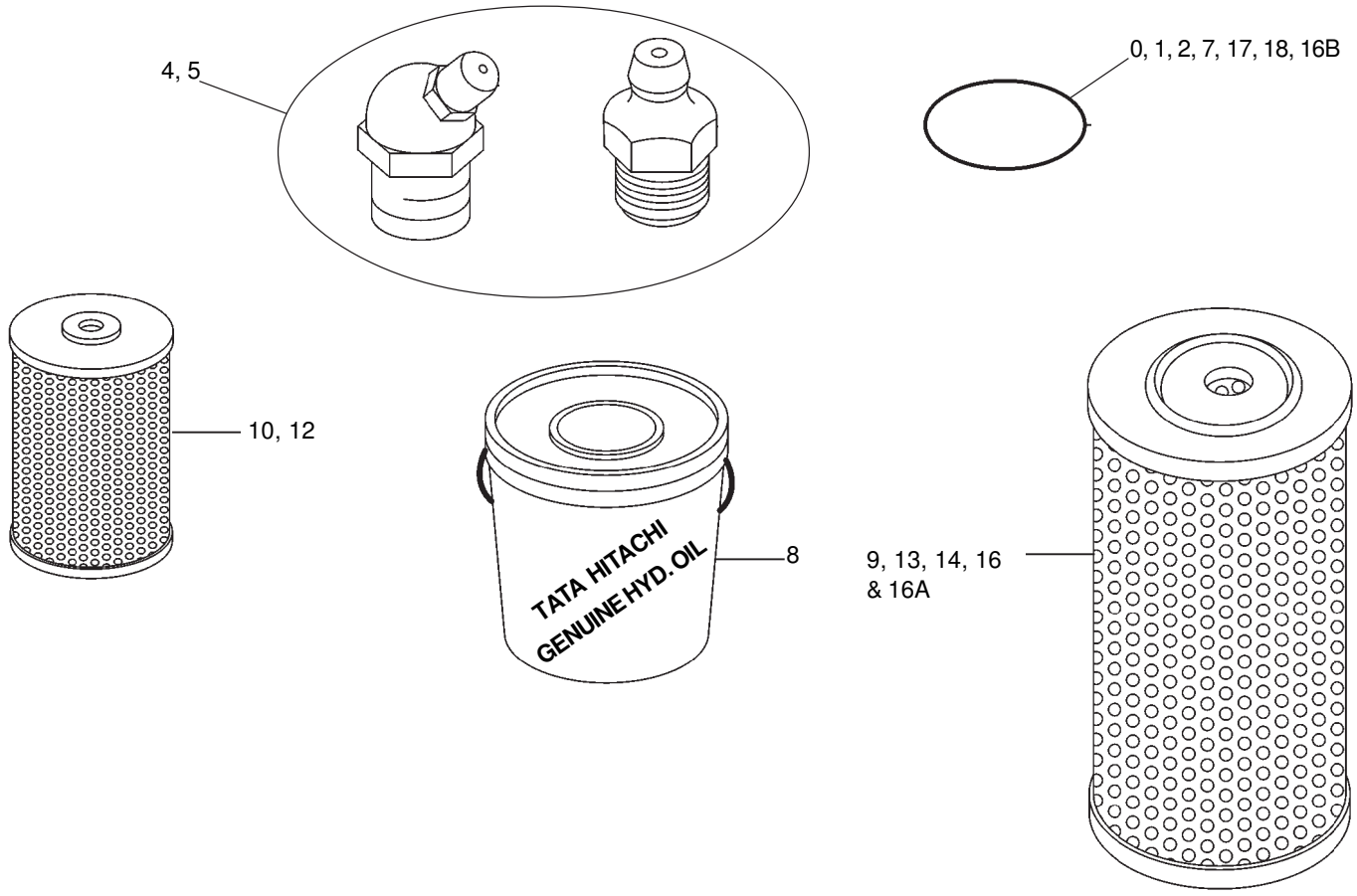

ITEM	PART NO.	PART NAME	QTY	S.C.	MACHINE SERIAL NO. ONWARDS	ICA	REPLACEABLE PART	
							PART NO.	QTY
--	**TE07274**	**EMERGENCY SPARES**	**--**					
0	4509180	O-RING	5		0ACH-000001			
1	4508805	O-RING	5		0ACH-000001			
2	Z966993	O-RING	5		0ACH-000001			
4	J75481	FITTING;GREASE	5		0ACH-000001			
5	J75482	FITTING;GREASE	5		0ACH-000001			
7	Z957366	O-RING	5		0ACH-000001			
8	TE06186	LONG INTERVAL HYD OIL	1		0ACH-000001			
9	4443773	FILTER;ELEMENT (HYD)	1		0ACH-000001			
10	4484495	ENGINE OIL FILTER	1		0ACH-000001			
12	4192631	FUEL FILTER	1		0ACH-000001			
13	4459548	ELEMENT FILTER	1		0ACH-000001			
14	4459549	ELEMENT FILTER	1		0ACH-000001			
16	4370435	PILOT FILTER	1		0ACH-000001			
16A	4191301	ELEMENT;FILTER	1		0ACH-000001			
16B	A810060	O-RING	1		0ACH-000001			
17	A810060	O-RING	5		0ACH-000001			
18	4187328	O-RING	5		0ACH-000001			

ASSEMBLY PART NOS.

FLOOR ASSEMBLY

ITEM	PART NO.	PART NAME	QTY	S.C.	MACHINE SERIAL NO. ONWARDS	ICA	REPLACEABLE PART	
							PART NO.	QTY
--	**TE07272**	**FLOOR ASSY.**	**--**					
0	TE07232	FLOOR PLATE	1		0ACH-000001			
1	9184105	RIGHT-COVER ASSY	1		0ACH-000001			
2	9183971	CONSOLE	1		0ACH-000001			
3	9183972	CONSOLE COVER	1		0ACH-000001			
5	TD03970	CONTROL LEVER (TRAVEL)	1		0ACH-000001			
6	TB01052	CONTROL LEVER ASSY (FRONT & SWING)	1		0ACH-000001			
8	9230182	LOCK LEVER ASSY	1		0ACH000001			
12	9183979	FLOOR-PARTS	1		0ACH-000001			
16	9204663	PILOT-PIPING (6)	1		0ACH-000001			
17	9176700	PILOT-PIPING (7)	1		0ACH-000001			
18	9204557	PILOT-PIPING (8)	1		0ACH-000001			
19	9204769	PILOT-PIPING (9)	1		0ACH-000001			
20	9204770	PILOTPIPING (11)	1		0ACH000001			
31	9239568	UNIT;ICX	1		0ACH-000001			
32	9204852	ELECTRIC PARTS (E)	1		0ACH-000001			
35	0003929	MAT; FLOOR	1		0ACH-000001			
37	4460047	RUBBER	1		0ACH-000001			
38	TE07678	CAB TOP LIGHT ASSY	1		0ACH-000001			
39	TE10106	MOBILE CHARGER ASSY	1		0ACH000239			
41	TE09240	RADIO (AM/FM)	1					

ELECTRICAL SEAT BELT

ITEM	PART NO.	PART NAME	QTY	S.C.	MACHINE SERIAL NO. ONWARDS	ICA	REPLACEABLE PART	
							PART NO.	QTY
--	**TE07715**	**ELECTRICAL SEAT BELT**	**--**					
1	257354249901	BEEPER (24V)	1		0ACH-000017			
2	TE07716	BEEPER HARNESS	1		0ACH-000017			

MOBILE CHARGER ASSY

ITEM	PART NO.	PART NAME	QTY	S.C.	MACHINE SERIAL NO. ONWARDS	ICA	REPLACEABLE PART	
							PART NO.	QTY
--	**TE10106**	**MOBILE CHARGER ASSY.**	**--**					
1	TE10107	HARNESS;MOBILE CHARGER	1		0ACH-000001			
2	TD20681	POWER SOCKET ASSY	1		0ACH-000001			
3	TE10108	WIRE HARNESS; MOBILE CHARGER (FRAME)	1					

PART NUMBER INDEX

PART NUMBER INDEX

Part No.	Page No.	Item
0003929	246	35
0004501	181	00
0005253	184	0
0005254	184	1
0009971881J	99	5
0130520	87	273
0130520	91	273
0218824	89	701B
0237903	91	973
0263019	87	160
0263019	95	156A
0308623	39	707
0353318	39	491
0365318	39	401
0365330	39	706
0384401	39	033
0384401	87	620
0401202	39	472
0443404	91	165
0443404	95	161A
0443405	95	163A
0443405	97	166
0443803	95	162A
0451028	91	159
0451028	93	159
0451028	97	159
495841	79	50
0625508	39	390
0625509	39	391
0628615	95	991A
0629404	39	468
0629404	93	152
0682503	95	267A
0697911	91	153
0697911	93	153
0718901	87	154
0718901	91	154
0718901	93	154
0718902	87	201
0718903	87	202
0718904	87	203
0718905	87	204
0718906	87	205
0718907	87	208
0718909	87	257
0718910	87	553
0718911	87	555
0718912	87	556
0718913	87	559
0719002	89	201B
0719003	89	202B
0719003	93	554
0719004	89	203B
0719004	91	151
0719004	93	151
0719004	95	155A
0719004	97	151
0719005	89	204B
0719007	89	321B
0719008	89	512B
0719009	89	541B
0719010	89	601B
0719011	89	633B
0719012	89	634B
0719101	91	155
0719102	91	206
0719103	91	207
0719104	91	209
0719105	91	253
0719107	91	511
0719107	93	511
0719108	91	515
0719109	91	516
0719109	93	516
0719110	91	521
0719110	93	521
0719110	95	521A
0719111	91	522
0719112	91	523
0719112	93	523
0719113	91	525
0719114	91	551
0719114	93	551
0719114	95	551A
0719115	91	552
0719115	93	552
0719116	91	602
0719116	97	602
0719117	91	603
0719117	97	603
0719118	91	611
0719118	97	611
0719201	93	251
0719202	93	254
0719203	93	255
0719204	93	513
0719205	93	526
0719302	95	251A
0719303	95	324A
0719304	95	325A
0719305	95	338A
0719306	95	357A
0719308	95	601A
0719309	95	974A
0719401	97	168
0719402	97	562
0719403	97	974
0719404	97	975
0747307	39	712
0803007	39	351
0803008	39	355
0803009	39	469
0816201	39	010
0816202	39	020
0816203	39	031
0816204	39	051
0816205	39	101
0816206	39	111
0816207	39	114
0816208	39	123
0816209	39	124
0816210	39	131
0816211	39	301
0816212	39	443
0816213	39	444
0816214	39	702
0816215	39	742
0816216	39	743
0816217	39	100
0816301	87	252
0816401	89	258
0816402	89	311B
0816501	91	256
0816701	95	103
0816702	95	511A
0872302	39	444
0920505	209	4
0920505	215	4
0920505	229	8
930451	179	46
957366	39	487
957366	79	51A
957366	93	162
959501	181	12
0961201	209	1-29
0961201	215	1-29
0961202	209	1
0961202	215	1
0961203	209	5
0961203	215	5
0961204	209	8
0961204	215	8
0961205	209	9
0961205	209	19
0961205	215	9
0961205	215	19
0961206	209	10
0961206	209	20
0961206	215	10
0961206	215	20
0961207	209	11
0961207	215	11
0961208	209	12
0961208	215	12
0961209	209	13
0961209	215	13
0961210	209	14
0961210	215	14

PART NUMBER INDEX

Part No.	Page No.	Item
0961210	223	21
0961211	209	15
0961211	215	15
0961212	209	16
0961212	215	16
0961213	209	17
0961213	215	17
0961214	209	18
0961214	215	18
0961215	209	21
0961215	215	21
0961215	229	22
0961216	209	22
0961216	215	22
0961216	229	23
0961217	209	23
0961217	215	23
0961218	209	24
0961218	215	24
0961218	229	25
0961219	209	25
0961219	215	25
0961220	209	26
0961220	215	26
0961221	209	27
0961221	215	27
0961222	209	28
0961222	215	28
0961223	209	29
0961223	215	29
0961224	215	30
0961225	215	31
0961226	209	32
0961226	215	32
0961226	223	39
0961226	229	33
0961227	209	33
0961227	209	35
0961227	209	42
0961227	215	33
0961227	215	35
0961227	215	42
0961227	223	40
0961227	223	42
0961227	223	49
0961227	229	34
0961227	229	36
0961227	229	38
0961228	209	34
0961228	215	34
0961228	223	41
0961228	229	35
0961229	209	36
0961229	215	36
0961229	223	43
0961229	229	39
0961230	209	37
0961230	215	37
0961231	209	38
0961231	215	38
0961232	215	39
0961233	209	40
0961233	215	40
0961234	209	41
0961234	215	41
0961234	229	37
0961235	209	43
0961235	215	43
0961236	209	44
0961236	215	44
0961236	223	52
0961236	223	54
0961236	229	43
0961236	229	46
0961237	209	45
0961237	215	45
0961301	209	30
0961302	209	31
0961303	209	39
0961401	223	1-36
0961402	223	1
0961403	223	4
0961404	223	7
0961405	223	8
0961405	223	22
0961406	223	9
0961406	223	23
0961407	223	10
0961408	223	11
0961409	223	12
0961410	223	13
0961411	223	14
0961411	229	4
0961412	223	15
0961413	223	16
0961414	223	17
0961415	223	18
0961416	223	19
0961417	223	20
0961418	223	24
0961419	223	25
0961420	223	26
0961421	223	27
0961422	223	28
0961423	223	29
0961424	223	30
0961425	223	31
0961426	223	32
0961427	223	33
0961428	223	34
0961429	223	35
0961430	223	36
0961431	223	37
0961432	223	38
0961433	223	44
0961434	223	45
0961435	223	46
0961436	223	47
0961437	223	48
0961438	223	50
0961438	229	44
0961439	223	51
0961440	223	53
0961501	229	1-30
0961502	229	1
0961503	229	5
0961504	229	9
0961505	229	10
0961505	229	20
0961506	229	11
0961506	229	21
0961507	229	12
0961508	229	13
0961509	229	14
0961510	229	15
0961511	229	16
0961512	229	17
0961513	229	18
0961514	229	19
0961515	229	24
0961516	229	26
0961517	229	27
0961518	229	28
0961519	229	29
0961520	229	30
0961521	229	31
0961522	229	32
0961523	229	40
0961524	229	41
0961525	229	42
0961526	229	45
970860	89	167B
984614	39	488
985099	91	563
991345	181	11
1014184	79	02
1015477	109	24
1015478	109	23
1022168	179	06
1022179	179	05
1022194	179	02
1022195	179	23
1022196	179	34
1022197	179	26
1022198	179	14
1022441	79	39
1023479	190	1
1024224	109	19

PART NUMBER INDEX

Part No.	Page No.	Item
1024384	109	18
1027932	37	6
1027952	37	23
1027953	37	20
1028405	77	2
1032661	190	0A
12650601058	145	16
2022744	79	14
2023377	35	25
2035088	43	3
2035960	243	13
2038877	79	04
2038915	179	41
2041971	184	102
2044704	37	1
2044922	153	33
2045031	179	43
2045470	113	5
2045474	145	8
2045509	119	29
2045998	67	33
2045998	69	26
2046132	243	25
2046685	243	12
2046877	243	22
2047381	145	11
2047884	181	08
2047885	181	15
2048000	179	41
2044332	111	08A
2050998	37	11
2051759	175	0A
2051920	186	2A
2053014	186	1B
2053081	188	3
206058500102	241	25
21Z1	241	39
257354249901	246	1
257382240101	99	1
261854109908	127	0
3025060	188	2
3033593	77	12
3035853	77	28
3035965	79	08
3035966	79	23
3036326	79	41
3039569	79	31
3052543	109	28
3053093	37	108
3053559	179	54
3074223	37	105
3074989	179	32
3075001	179	36
3075002	179	27
3075003	179	16
3075005	179	21
3075692	37	18
3075802	243	10
3076197	243	11
3077237	190	0B
3077560	243	19
3077929	184	4
3077929	184	6
3077930	184	7
3079448	59	28
3079449	63	52
3079454	56	10
3079456	71	54
3079491	195	7
3079545	201	13
3079728	67	26
3079728	69	17
3080000	37	52
3080001	37	51
3081023	79	16
3081085	77	5
3081250	188	1
3087164	9	3
3087816	127	10
3087882	135	1
3087987	111	26B
3087987	111	27B
3088062	37	30
3088063	37	24
3088069	37	13
3088071	37	2
3088126	37	32
3089266	77	4
3089486	103	16AB
3089617	77	55
3089618	77	56
3089827	137	3
3089835	9	14
3089848	116	11
3089908	201	10A
3089968	201	36
3098245	111	13
3090007	145	0
3090008	145	1
3090009	145	2
3090417	201	58
3090418	201	57
3090879	15	7
3091337	138	1A
3091337	149	1B
3091367	145	9
3091565	143	10
3091699	13	12C
3092037	201	15
3092350	243	20
3092351	243	21
3092925	13	17A
3093511	9	16
3094361	181	14
3094376	181	24
3094377	181	26
3094717	179	10
3096779	181	23
3099628	111	06A
3101122	37	8
3103022	181	38
3103191	175	5
3103229	175	0B
3103242	175	8
3103252	175	10
3103254	175	9
3103491	181	20
3103617	186	1A
3103618	186	2B
3103619	186	2C
3103620	186	5
3103740	190	0DB
3104216	184	101
3106174	79	41
3220Z38D3	243	16
35011200166	241	26
35011200182	241	27
35011200212	241	28
35011210340	241	31
35012016181	241	33
35012018213	241	34
4000859	131	25
4004229	241	13
4004589	33	12
4018545	169	12-0
4018545	173	6
4020977	241	16
4022696	141	0F
4022697	137	14
4022697	149	0G
4022697	151	10
4022701	147	18
4028265	89	162B
4040580	243	9
4047044	29	30A
4051160	33	8
4053697	51	14
4053697	53	8
4055311	17	5
4055311	113	11
4055311	123	5
4055311	131	23
4055311	135	40
4055312	7	11
4055312	8	1
4055312	27	7
4055312	29	13
4055312	59	26

PART NUMBER INDEX

Part No.	Page No.	Item
4055312	61	46
4055312	62	46
4055312	67	35
4055312	69	30
4055312	71	33
4055312	125	14
4055312	131	24
4055312	135	39
4055312	159	23
4055312	160	4
4055312	164	7
4066695	179	03
4067720	201	0G
4067720	203	60B
4067901	197	2
4067901	201	4
4067901	229	3
4073519	18	2
4073519	243	3
4074008	197	1
4074008	201	3
4074008	202	3
4074008	229	7
4085479	195	0C
4085479	195	2
4085479	197	0
4085479	201	0D
4085479	201	2
4085479	209	3
4085479	209	7
4085479	215	3
4085479	215	7
4085479	223	3
4085479	223	6
4085560	43	4
4085857	234	7
4085857	235	7
4089822	172	02
4089822	173	11
4090405	19	2
4092534	77	81
4094325	79	25
4027427	111	20
4051262	111	26C
4051262	111	27C
4099290	79	46
4109378	41	10
4114402	77	22
4114405	23	2
4113154	111	35
4116310	116	3
4118499	77	57
4121859	153	51
4121859	171	21
4185600	111	22
4126090	77	36
4128863	182	5
4130139	17	1A
4137684	188	6
4138084	190	0E
4142154	19	2B
4142952	33	0A
4143531	234	1E
4143531	235	1E
4143531	236	1E
4143531	237	1E
4144011	113	17
4144525	37	28
4144558	37	27
4146370	79	38
4148706	11	4
4153103	31	24A
4153103	31	25A
4153251	17	1B
4154233	87	560
4154614	46	4
4154614	51	10
4154651	199	5
4161735	3	3
4162835	22	8A
4162836	22	8C
4162837	22	8B
4168132	165	6
4169516	77	78
4170585	115	27
4176429	177	1-10
4176479	177	1-6
4176480	177	1-7
4179176	79	37
4179177	79	35
4179179	79	34
4179833	77	11
4179834	77	13
4179838	79	43
4179843	77	59
4180349	79	48
4180555	17	6
4182067	115	24
4184582	8	3
4187060	177	1-2
4187308	41	13
4187308	74	3
4187328	44	3
4187328	45	13
4187328	49	6
4187328	171	5
4187328	197	15
4187328	201	27
4187328	244	18
4187329	197	14
4188649	5	5
4189018	5	7
4189184	116	4
4189539	41	15
4189601	44	15
4189601	49	15
4189601	171	22
4189860	45	6
4189860	197	17
4190117	37	25
4190127	197	18
4190253	131	43
4190253	135	38
4190261	25	6
4190261	27	9
4190261	131	29
4190261	135	36
4190261	199	9
4190264	67	14
4190264	131	37
4190265	61	68
4190266	27	8
4190266	131	35
4190272	131	44
4190273	73	9
4190273	131	31
4190274	131	32
4190275	57	11
4190275	131	30
4190276	7	9
4190277	29	15
4190277	159	25
4190277	160	9
4190282	131	34
4190291	71	60
4190292	63	35
4190587	22	8
4191219	77	10
4191301	55	4B
4191301	244	16A
4191664	79	24
4191665	79	09
4191974	77	23
4192020	179	40
4192021	179	20
4192034	29	26
4192034	164	12
4192035	135	37
4192035	159	24
4192631	5	0B
4192631	244	12
4192975	179	04
4193245	79	42
4193848	61	43
4194362	79	19
4194454	37	22
4195494	43	10
4195898	177	1-12

PART NUMBER INDEX

Part No.	Page No.	Item
4196260	51	11A
4196260	53	6A
4196826	3	21
4197724	41	14
4197763	179	31
4198411	49	5
4198956	79	21
4200176	3	25
4200227	79	36
4200434	241	20
4200435	241	5
4200436	241	6
4200437	241	14
4200438	241	21
4201107	109	11
4201749	3	27
4201788	243	7
4201986	3	32
4201993	111	06C
4201993	115	19
4202103	171	17
4202312	241	12
4202422	61	4
4203163	171	23
4203223	127	7
4205317	111	26E
4205317	111	27E
4205318	111	26D
4205318	111	27D
4208977	111	36
4213419	111	21
4217651	111	34
4203411	111	02
4203411	115	03
4203485	77	54
4204810	109	10
4204862	79	54
4204882	74	2
4205084	153	12
4206060	45	3
4206928	11	3
4208279	3	33
4208913	61	14
4209157	45	2
4209931	62	21
4210661	3	29
4213356	241	36
4216295	79	61
4219918	61	67
4224238	20	0G
4224631	195	23
4225809	234	1B
4225809	235	1B
4225809	236	1B
4225809	237	1B
4229973	11	16
4231542	177	1-7
4234782	77	40
4235232	103	6
4239713	35	45
4239943	241	38
4242262	77	64
4242263	77	63
4245194	19	3
4245194	21	3
4245797	179	48
4248106	175	11
4250260	35	52
4250261	35	53
4252767	77	76
4252877	199	8
4255055	175	12
4255264	43	15
4255304	56	11
4255304	59	30
4255304	63	50
4255304	65	18
4255304	71	56
4255305	63	51
4255305	65	17
4255530	3	26
4255762	127	8
4255792	35	41
4255799	3	2
4256314	5	6
4257034	127	3
4257128	25	2
4257159	6	4
4257159	131	14
4257291	199	12
4259220	33	20
4261937	71	39
4261938	67	1
4261938	69	1
4263766	41	16
4264452	37	104
4264805	119	37
4264805	243	15
4265372	77	69
4266930	164	9
4269451	179	30
4269452	179	19
4269470	179	18
4269472	179	39
4269473	179	50
4269607	25	4
4272297	182	6
4272306	169	12-1
4272436	171	15
4273759	3	22
4274282	177	100-0
4277018	3	24
4277474	179	44
4277929	234	13
4277929	235	13
4277929	236	13
4277929	237	13
4277930	234	9
4277930	235	9
4277930	236	9
4277930	237	9
4278168	179	45
4278783	147	16
4280359	103	14
4280359	103	16C
4280359	153	14
4281293	135	32
4282220	29	2B
4282488	41	2
4282633	190	0F
4284520	179	38
4284521	179	29
4286916	67	19
4286916	69	11
4286933	234	3
4286933	235	3
4286934	234	4
4286934	235	4
4287137	147	0H
4287213	179	51
4288445	107	2
4289709	121	14
4289772	199	11
4291379	27	22A
4291380	27	16B
4291380	27	21B
4291380	27	22B
4293950	59	29
4293950	71	57
4293950	77	58
4294508	147	11
4294621	79	59
4297136	22	11
4299059	119	39
4299059	243	14
4300351	113	19
4303025	201	28
4306888	77	70
4313440	44	9
4315607	186	6
4315607	188	7
4315607	190	0G
4315991	3	23
4316009	199	13
4317587	188	4
4317621	173	4
4319274	173	5
4319299	111	01

PART NUMBER INDEX

Part No.	Page No.	Item
4323361	43	11
4323362	43	12
4323613	135	13
4326739	27	0A
4326740	27	0C
4326741	27	0D
4326742	27	0E
4326807	27	0B
4327293	56	8A
4327293	59	2A
4327293	59	21B
4327293	59	24B
4327293	61	70B
4327293	62	27B
4327293	63	34B
4327294	46	11B
4327294	46	12B
4327294	46	13B
4327294	49	11B
4327294	49	12B
4327294	49	13B
4327315	57	10B
4330227	55	4
4330785	100	2
4332697	27	20B
4333835	103	8
4334203	99	6
4335060	115	22
4335136	27	0
4336494	243	18
4337812	79	43
4341788	137	12
4341788	151	8
4341877	64	7
4343268	11	2
4343365	37	107
4344303	22	13
4345297	199	1
4345675	45	16
4345675	197	13
4346499	73	0
4346770	159	6
4347396	153	27
4348665	81	69
4350249	163	12
4351011	107	1
4351175	67	27
4351175	69	18
4351255	117	4
4351281	59	22
4351774	67	28
4351774	69	19
4352457	149	0F
4355081	79	53
4355412	44	13
4355728	181	03
4357862	125	11
4358100	229	2
4359076	243	5
4360981	199	0
4361800	119	33
4361800	135	2
4361802	119	4
4361802	119	8
4361802	119	15
4361802	119	19
4362471	27	17B
4364784	35	39
4364970	111	04
4365826	81	83A
4366256	79	06
4366356	79	07
4368562	22	23
4368629	111	03
4368630	111	05
4368943	74	0
4368973	123	3
4370247	159	29A
4370249	155	8D
4370251	160	3A
4370266	155	10
4370267	157	43
4370269	155	14
4370296	157	39
4370298	157	48
4370299	157	46
4370308	157	53
4370309	157	55
4370435	55	4A
4370435	244	16
4371243	11	12
4371258	11	6
4371273	243	6
4371318	5	0E
4371799	243	8
4371903	5	0C
4373196	101	16
4373205	243	4
4374265	25	15
4374345	29	29A
4374347	29	29B
4378891	184	3
4378892	184	5
4378893	184	8
4379989	149	0CC
4380088	169	5-0
4380253	138	0CB
4381407	165	3
4381572	135	62
4381855	209	2
4381855	209	6
4381855	215	2
4381855	215	6
4381857	229	6
4381859	223	2
4381859	223	5
4382739	183	10
4382742	183	02
4383972	182	3
4385472	3	19
4385915	35	19
4386060	17	3
4386062	17	4
4386285	47	4
4386286	49	11A
4386287	49	12A
4386288	49	13A
4386483	56	14
4386525	71	53
4386526	71	59
4386544	143	26
4386674	71	3
4386754	138	0BB
4387001	199	2
4387002	199	3
4387143	35	29
4387252	197	12
4388212	149	0CB
4388529	37	106
4390098	127	26
4390157	71	13
4390401	33	7
4390646	44	0
4390656	37	300-4
4392796	105	1AB
4392798	105	1AD
4392799	105	1AE
4392800	105	1B
4392801	105	1C
4392802	105	1D
4392803	105	1E
4392804	105	1F
4392805	105	1G
4392806	105	1H
4392807	105	1I
4392808	105	1P
4392808	105	1Q
4392809	105	1J
4392812	105	1M
4392813	105	1N
4395453	77	8
4395457	77	9
4396451	22	12
4396696	181	02
4396755	181	09
4397947	29	30B
4398036	43	27
4399183	203	60C

PART NUMBER INDEX

Part No.	Page No.	Item
4399783	201	28
4401293	179	15
4401294	103	5
4402481	37	7
4402781	46	11A
4404022	56	12
4404301	5	0A
4404303	5	0G
4404753	27	16A
4404753	27	21A
4404755	27	17A
4404757	27	20A
4404947	37	17
4405128	103	16AC
4405164	161	8
4425305	111	26A
4425305	111	27A
4428902	111	40
4437432	111	39
4437433	111	08B
4447067	111	42
4405166	161	6
4405562	55	19
4407253	65	14
4408679	47	5
4409396	137	7B
4409396	151	1B
4409999	100	1
4410898	115	04
4411793	15	4
4411911	31	22
4412650	37	3
4412666	67	3
4412666	69	3
4413313	55	36
4416704	149	0I
4418301	131	40
4419718	39	--
4420083	22	2
4420875	119	0
4420876	119	3
4420877	119	7
4420878	119	11
4420879	119	14
4420880	119	18
4421771	115	09
4421939	160	3B
4421946	159	29B
4422000	160	2A
4424157	141	0C
4424157	143	4C
4425177	67	10
4425414	115	08
4425481	149	0K
4425573	13	9
4425575	151	1C
4425576	151	0B
4426044	9	18
4426128	3	10
4426155	153	16
4426156	125	8
4426157	153	24
4426158	153	36
4426159	163	4
4426160	163	0
4426161	163	11
4426162	153	20
4426352	120	00
4426354	120	04
4426354	135	63
4427152	71	6
4428007	177	100-5
4429044	147	5
4429045	147	4
4429120	115	06
4429250	9	2
4429250	11	--
4429283	171	12
4430563	37	9
4430667	37	26
4430714	37	16
4430716	37	4
4430716	37	5
4430870	153	48
4430871	153	50
4430872	153	31
4430873	153	30
4430912	31	18
4431357	141	0H
4431357	143	4D
4433333	29	27
4433793	125	0
4433794	125	7
4433970	87	--
4433970	89	--
4433970	91	--
4433970	93	--
4433970	95	--
4433970	97	--
4434017	35	14
4435126	201	19
4435127	201	18
4435128	201	41
4435584	195	10
4436255	73	1
4436271	81	83
4436293	55	35
4436441	153	32
4436535	35	38
4436535	61	42
4436535	62	42
4436535	63	42
4436537	5	18
4437106	115	23
4437333	115	11
4437653	67	30
4437656	67	31
4437731	62	61
4437734	59	24A
4437738	62	27A
4437741	71	43
4437794	71	14
4437795	61	70A
4437902	59	21A
4438288	69	21
4438290	69	22
4438594	195	0E
4438860	165	0D
4438861	165	0B
4438862	165	0A
4438863	165	0C
4438888	77	52
4438889	77	50
4439120	21	0
4439299	9	12
4439469	201	10B
4439931	46	13A
4439932	46	12A
4440150	7	2
4440161	141	0AB
4440162	141	0AC
4440163	141	0AD
4440164	141	0AE
4440186	15	3
4440206	160	3
4440219	159	29
4440395	13	8
4440446	137	7C
4440532	13	6
4440703	147	0C
4440802	35	6
4440914	147	0D
4440915	147	0E
4440916	147	0F
4440917	147	0G
4440919	147	0B
4440996	137	7D
4441059	153	41
4441061	153	42
4441089	143	27
4441117	119	30
4441139	153	39
4441140	9	17
4441190	8	4
4441292	8	2
4441471	195	27
4441471	201	40
4442442	57	10A

PART NUMBER INDEX

Part No.	Page No.	Item
4443358	29	2A
4443773	244	9
4443884	201	0B
4444284	201	50
4444285	201	51
4445220	106	22
4445243	234	1C
4445243	235	1C
4445243	236	1C
4445243	237	1C
4445247	234	8
4445247	235	8
4445247	236	8
4445247	237	8
4445254	37	14
4445322	113	1
4445354	37	35
4445469	139	7B
4445473	139	7C
4445474	139	7D
4445635	195	30
4445635	201	54
4445636	195	31
4445636	201	55
4445637	195	32
4445916	163	19
4446127	73	17
4446129	62	60
4446406	31	30B
4446406	31	31B
4446537	15	9
4446589	13	12B
4446675	13	12A
4446916	20	0A
4446960	115	07
4447050	111	06B
4447072	125	16
4447625	164	10
4447765	121	7
4447868	121	8
4447936	18	5
4448179	161	12
4448285	160	2
4448925	155	16
4448990	119	35
4449019	135	49
4449068	163	7
4449348	163	17
4449842	13	17B
4449916	13	18B
4450013	201	53
4450014	201	52
4450015	195	33
4451821	138	0BD
4451822	138	0BC
4451865	143	1B
4452162	29	20
4452163	29	21
4452165	29	22
4452326	65	19
4452468	101	11
4452469	101	10
4452736	63	34A
4453664	105	1AC
4453760	137	7E
4453765	137	7F
4453874	103	9
4453910	20	0D
4453912	20	0H
4454105	11	20
4454113	11	1
4454117	5	0D
4454406	105	1
4454518	135	3
4454752	16	1
4455088	179	22
4455098	179	37
4455099	179	28
4455586	20	0C
4455588	74	9
4455589	74	10
4456130	161	1
4456352	20	0E
4456375	105	1O
4456376	105	1L
4456377	105	1K
4456380	105	1A
4456381	105	1AA
4456546	69	14
4456547	69	15
4456548	61	54
4456549	62	59
4456550	61	55
4456551	61	56
4456552	61	57
4456553	62	62
4456554	61	64
4456555	69	12
4456556	69	13
4456557	67	20
4456558	67	21
4456559	67	22
4456560	67	23
4456723	125	0B
4456725	125	0A
4457896	127	19
4458227	125	0C
4458228	125	0D
4458229	125	0E
4458230	125	0F
4458231	125	0G
4458232	125	0H
4458233	125	0I
4458234	125	0J
4458235	125	7A
4458236	125	7B
4458237	125	7C
4458890	13	15
4459013	141	0AF
4459548	20	2
4459548	244	13
4459549	20	0B
4459549	244	14
4459641	171	7
4460047	246	37
4460245	11	14
4460267	13	19B
4460373	195	34
4460399	161	13
4461209	29	19
4461342	137	7G
4461342	151	1D
4461525	71	64
4461910	181	36
4462038	181	05
4462303	18	0
4463075	11	13
4463076	11	19
4463189	16	0
4463190	16	2
4463295	11	5
4463296	11	7
4463297	11	8
4463298	11	10
4463299	11	11
4463300	11	18
4463301	11	9
4464274	155	8G
4464275	155	9
4464277	155	11
4464278	155	12
4464279	155	13
4464280	155	15
4464281	155	17
4464282	155	18
4464283	155	19
4464284	155	20
4464285	155	21
4464286	155	22
4464287	155	23
4464288	155	24
4464341	155	1
4464342	155	2
4464343	155	3
4464344	155	4
4464345	155	4A
4464346	155	4B
4464347	155	5

PART NUMBER INDEX

Part No.	Page No.	Item
4464349	155	6
4464350	155	7
4464352	155	8
4464353	155	8A
4464354	155	8B
4464355	155	8C
4464356	155	8E
4464357	155	8F
4464450	155	25
4464451	155	26
4464452	155	27
4464453	155	28
4464454	155	29
4464455	155	30
4464456	155	31
4464457	155	32
4464458	155	33
4464459	155	34
4464460	155	35
4464461	157	36
4464462	157	37
4464463	157	38
4464465	157	40
4464466	157	41
4464473	157	42
4464474	157	44
4464475	157	45
4464476	157	47
4464477	157	49
4464478	157	50
4464479	157	52
4464480	157	54
4464483	157	56
4465401	73	15
4465402	73	16
4465681	56	8B
4465683	59	2B
4465684	71	70
4465685	71	66
4465686	71	67
4465687	71	68
4465688	71	69
4467212	5	0F
4467592	81	100
4468244	181	39
4468248	181	27
4468249	181	29
4468250	181	30
4468258	181	17
4469095	3	42
4469095	3	46
4469096	3	43
4469097	3	44
4469097	3	47
4470326	179	11
4472307	165	5
4472355	181	35
4472673	35	20
4473870	31	24
4473871	31	25
4475147	181	06
4475769	153	55
4477526	161	11
4479926	186	7
4479978	77	73
4484495	31	26A
4484495	244	10
4485262	31	26
4489385	5	0
4489830	5	0F
4503469	15	10
4504199	9	9
4504367	33	9
4504491	9	8
4504491	15	6
4506407	87	263
4506407	89	164B
4506408	89	165B
4506408	91	161
4506408	93	161
4506408	95	164A
4506408	97	161
4506415	181	32
4506416	55	32
4506416	89	163B
4506418	44	6A
4506418	55	14A
4506418	55	16A
4506418	55	17A
4506418	55	20A
4506418	55	28A
4506418	55	33A
4506418	71	4A
4506418	91	167
4506418	171	8A
4506418	171	9A
4506418	181	42A
4506420	89	161B
4506420	93	564
4506424	41	12A
4506424	41	15A
4506424	44	15A
4506424	49	5A
4506424	49	15A
4506424	74	1A
4506424	91	561
4506424	93	561
4506424	95	561A
4506424	171	22A
4506429	44	1A
4506429	51	18A
4506429	53	5A
4506429	89	166B
4506429	171	4A
4507512	9	10
4508575	17	7
4508805	46	5
4508805	51	8
4508805	244	1
4509180	35	45A
4509180	35	46A
4509180	35	47A
4509180	35	48A
4509180	35	49A
4509180	44	7A
4509180	44	10A
4509180	44	11A
4509180	51	17A
4509180	61	3A
4509180	61	4A
4509180	61	5A
4509180	61	6A
4509180	61	14A
4509180	61	28A
4509180	62	3A
4509180	62	5A
4509180	62	21A
4509180	63	51A
4509180	65	17A
4509180	65	19A
4509180	67	1A
4509180	67	18A
4509180	69	1A
4509180	69	10A
4509180	71	5A
4509180	73	3A
4509180	73	7A
4509180	73	11A
4509180	81	81A
4509180	87	164
4509180	91	164
4509180	93	164
4509180	244	0
4514699	153	9
4514699	164	3
4514700	27	3
4514700	29	3
4515013	91	972
4515041	81	70
4602154	111	06D
4602578	161	10
4603925	5	0A
4607398	65	20
4607399	65	21
4609014	77	100-1
4609016	179	47
4609049	153	53
4609833	77	100-2

PART NUMBER INDEX

Part No.	Page No.	Item
4609956	113	21
4610412	153	54
4610640	105	1P
4610641	105	1Q
4611472	223	--
4611473	215	--
4611474	209	--
4611475	229	--
4611622	33	0C
4611623	33	0D
4611642	195	39
4611648	195	38
4611688	3	53
4611688	195	36
4611731	195	0B
4611733	3	50
4611733	195	42
4612331	159	31
4614096	37	53
4614096	37	101
4614286	115	26
4614296	115	21
4614331	115	28
4614911	6	1
4615610	115	10
4618056	135	43
4621774	29	19B
4621869	29	19A
4623639	161	1A
4625670	175	3
4625787	31	30A
4625788	31	31A
4625911	175	7
4625912	175	6
4626882	85	7
4627274	64	11
4627275	64	12
4627276	64	14
4627277	64	13
4627480	181	18
4627953	171	14
4628511	186	3
4629852	105	1R
4631410	149	0CD
4632763	184	2
4633532	183	08
4633698	183	09
4634010	183	08
4634010	183	09
4635303	171	0
4635305	171	1
4639126	79	26
4640107	209	100
4640107	215	100
4640108	229	100
4640118	223	100
4641714	79	42
4644830	19	2A
4644831	19	2C
4647124	169	14
4648103	169	10
4649624	184	10
4649624	185	10
4662435	195	45
4678480	51	26
4692239	153	46
4712342	51	11
4712342	53	6
4721275	22	24
4922685	241	01
5007074	3	0
5007193	25	0
5007209	137	7A
5007225	147	0A
5007233	147	0
5007299	195	0D
5007342	106	15
5007935	151	0A
5008238	151	1A
5008662	201	0A
5010090	169	0
6019252	106	14
6019318	143	1A
6019326	141	0AA
6019350	143	4A
6019360	149	0A
6019616	141	12
6019738	149	0P
6019838	106	12
6019996	149	0CA
6020125	103	16AA
6020352	107	0
62196058503	121	5
7035503	116	0
7036594	117	12
7036595	117	14
7037273	22	1
7038065	159	13
7038558	85	0
7038753	141	7
7038769	5	12
7038778	144	0
7038780	141	0A
7038798	137	7
7039334	21	7
7039389	106	8
7039891	51	20
7039892	53	10
7039928	143	17
7040070	143	8
7040120	139	7A
7040124	139	7
7040126	138	0BA
7040127	138	0CA
7040128	138	0B
7040133	138	0C
7040380	137	2
7040468	18	4
7040600	149	0C
7040942	143	34
7042071	151	0
7042138	151	1
7043484	201	0
7047467	190	0DA
7048312	188	0
7048373	173	0
7048375	173	2
7048377	173	1
7048378	173	3
8051275	79	12
8060810	35	15
8061721	101	14
8062623	109	1
8062667	109	0
8067496	25	11
8068521	79	03
8069136	45	22
8069136	75	1
8069137	45	20
8069137	75	5
8069336	41	0
8069383	197	4
8069384	197	5
8069385	197	8
8069386	197	9
8070028	201	61
8070028	203	60A
8070028	203	61
8070029	201	60
8070029	203	60
8073102	27	5
8077903	111	32
8073901	116	6
8076619	106	9
8077521	149	0J
8078935	162	2
8078936	162	0
8080342	85	1
8080495	15	11
8080628	195	6
8080785	5	1
8080786	15	0
8080787	5	13
8080908	201	10
8080936	3	9
8081071	13	12
8081101	22	16
8081308	22	20

PART NUMBER INDEX

Part No.	Page No.	Item
8081519	195	0
8081805	51	7
8082329	135	24
8083414	143	9
8084309	19	0
8084579	143	1
8085006	143	33
8085264	13	17
8085265	13	18A
8085266	13	18
8085267	13	19A
8085268	13	19
8089039	139	2
8091314	5	20
8092014	195	35
8092248	111	00
8092512	181	21
8094093	3	49
8094446	115	00
8103642	172	00
9109189	27	22
9134110	79	51
9134111	81	81
9134112	181	42
9159758	169	5
9160137	23	--
9160139	37	--
9160144	45	--
9160148	75	--
9162012	197	--
9163648	49	12
9163649	49	13
9163818	33	--
9168326	29	30
9169894	182	0
9169894	183	00-10
9176470	27	16
9176471	27	17
9176700	65	--
9176700	246	17
9183810	6	--
9183971	117	--
9183971	246	2
9183972	119	--
9183972	246	3
9183979	106	--
9183979	246	12
9184105	120	--
9184105	246	1
9184275	111	08
9184106	163	--
9186523	161	--
9186783	37	200
9186784	37	00
9190851	56	8
9190854	59	2
9190859	59	4
9190861	59	21
9190865	59	24
9190867	62	27
9191430	139	--
9191438	5	--
9191439	31	--
9191440	9	--
9191441	13	--
9191442	15	--
9191443	22	--
9191444	74	--
9191435	3	--
9191445	21	--
9191447	29	--
9191448	25	--
9191449	138	1
9191450	35	--
9191451	85	--
9191452	41	--
9191453	43	--
9191454	44	--
9191455	46	--
9191456	47	--
9191457	51	--
9191458	53	--
9191459	55	--
9191460	56	--
9191461	57	--
9191462	59	--
9191463	61	--
9191463	62	--
9191463	63	--
9191467	71	--
9191469	8	--
9191470	7	--
9191471	127	--
9191472	131	--
9191474	164	--
9191475	159	--
9191476	160	--
9191477	137	--
9191479	138	0
9191481	141	--
9191482	143	--
9191484	144	--
9191485	147	--
9191486	149	--
9191486	149	0
9191490	138	--
9192245	141	0
9192323	143	4
9194287	46	11
9194288	46	13
9195215	37	--
9195241	77	--
9196157	149	1
9196463	20	--
9196546	29	2
9196720	46	12
9200071	57	10
9200078	63	34
9201713	27	--
9201970	19	--
9204030	77	100
9204557	67	--
9204557	246	18
9204663	64	--
9204663	246	16
9204769	69	--
9204769	246	19
9204770	73	--
9204770	246	20
9204852	135	--
9204852	246	32
9204891	169	13
9204891	182	--
9205272	195	--
9205495	18	--
9205832	49	--
9207252	6	3
9207291	77	32
9207291	79	--
9207292	79	66
9211224	29	29
9211225	27	20
9211226	27	21
9211493	151	--
9214478	85	--
9214478	87	--
9214478	89	--
9214478	91	--
9214478	93	--
9214478	95	--
9214478	97	--
9214480	61	7
9220906	55	37
9226367	111	06
9226755	135	56
9229187	182	1
9229962	181	33
9230182	116	--
9230182	246	8
9231673	179	00
9231673	181	--
9232304	100	9
9232360	169	12-2
9232360	179	--
9235551	109	30
9235551	111	--
9239568	122	31
9239568	246	31

PART NUMBER INDEX

Part No.	Page No.	Item
9239583	113	23
9239583	115	--
9243509	175	0
9243514	31	30
9243516	31	31
9243535	169	7
9243535	175	--
9243848	61	70
9245117	186	--
9245118	186	2
9245119	186	1
9245172	169	6
9245615	190	--
9245616	190	0
9245617	190	0D
9207567	111	26
9207568	111	27
9246436	115	17
9250292	173	--
9251026	184	0-10
9251178	169	2
9251178	171	--
9257608	188	--
9258853	184	--
9259782	169	4
9259782	172	--
9262068	169	1
9262068	177	--
9262068	177	200
9262069	169	12
9264269	77	200
9282722	98	11
9318090	37	100
94-0632	33	11
94-1901	25	16
94-2011	25	14
94–2011	35	24
94-2012	37	36
94-2013	25	1
94-2022	15	13
94-2807	129	9
964255	111	37
9724756	79	32
9726772	25	10
9727148	197	7
9727149	197	6
9736782	171	18
9742779	77	66
9745798	149	0D
9747719	43	17
9748439	143	29
9748440	143	30
9749142	79	28
9749682	27	11
9749842	147	22
9751787	67	4
9751787	69	4
9751797	141	0D
9755097	159	17
9756005	121	6
9756079	6	3A
9756199	51	21
9756742	74	7
9757141	67	11
9757192	106	29
9759157	115	14
9759158	115	15
9759265	51	23
9759266	51	24
9763511	169	6-0
A590106	16	4
A590106	33	17
A590106	77	71
A590106	135	53
A590106	141	0E
A590106	161	17B
A590108	8	7B
A590108	33	2
A590108	113	16
A590108	113	22B
A590108	125	3B
A590108	127	12
A590108	137	13
A590108	147	27
A590108	151	9
A590108	159	9
A590108	159	15
A590110	13	5B
A590110	13	13B
A590110	31	2
A590110	61	44B
A590110	109	15
A590110	109	22B
A590110	109	29B
A590110	121	10
A590110	125	15B
A590110	129	3
A590110	131	4
A590110	135	35
A590110	135	66C
A590110	137	8
A590110	147	12
A590110	149	0H
A590110	151	4
A590110	159	2
A590112	77	200-2
A590112	113	24
A590112	149	0R
A590114	121	13
A590116	147	17
A590904	131	7
A590906	7	3
A590906	33	18
A590106	111	33B
A590906	111	24
A590910	111	11
A590906	35	3
A590906	99	3
A590908	17	2
A590908	33	4
A590908	77	62
A590908	113	15
A590908	147	26
A590908	159	8
A590910	22	22
A590910	25	13
A590910	31	1
A590910	55	6
A590910	103	16AE
A590910	109	14
A590910	121	11
A590910	127	5
A590910	131	3
A590910	135	34
A590910	135	66B
A590910	137	9
A590910	145	15
A590910	147	13
A590910	149	0N
A590910	151	5
A590910	159	1
A590910	177	1-18
A590912	45	21
A590912	100	3
A590912	149	0S
A590912	197	19B
A590914	177	100-2
A590914	195	25
A590914	234	12
A590914	235	12
A590914	236	12
A590914	237	12
A590916	9	1
A590916	9	5
A590916	23	1
A590916	77	37
A590916	85	4
A590920	179	07
A810060	35	12
A810060	244	16B
A810060	244	17
A810070	188	5
A810080	190	0C
A810095	177	1-4
A810120	177	1-17
A810160	25	8
A810160	35	16
A810165	35	21

PART NUMBER INDEX

Part No.	Page No.	Item
A810190	35	8
A811025	95	266A
A811030	39	051A
A811030	91	565
A811040	87	264
A811050	53	3
A811055	87	261
A811060	55	4C
A811060	55	9A
A811075	41	7
A852122	61	29
A852122	57	1
A852122	59	7
A852122	71	1
A852133	61	3
A852134	44	10
A852333	69	10
A852122	71	50
A852122	171	11
A852123	56	6
A852123	61	6
A852123	71	44
A852133	62	3
A852133	67	18
A852133	73	3
A852134	55	9
A852134	55	20
A852143	44	6
A852144	171	9
A852222	55	28
A852222	57	5
A852233	55	16
A852234	55	17
A852322	35	44
A852322	57	0
A852322	59	6
A852322	63	66
A852323	71	28
A852323	56	7
A852323	61	28
A852323	64	0
A852332	35	48
A852333	44	7
A852333	73	11
A852334	35	47
A852334	44	11
A852334	71	5
A852334	73	7
A852343	55	14
A852344	55	33
A852344	71	4
A852433	35	46
A852433	61	5
A852433	62	5
A852522	59	23
A852544	171	8
A853166	74	1
A853188	44	1
A853188	171	4
A853366	41	12
A885002	35	42
A885002	51	22
A885002	53	14
A885003	35	49
A885003	51	17
A885008	51	18
A885008	53	5
D911521	20	0F
E13805087	21	2
E14001330	103	3
J010816	16	3
J010845	101	17
J011016	199	10
J011020	7	10
J011020	22	14
J011020	27	15
J011020	29	17
J011020	57	12
J011020	61	69
J011020	63	36
J011020	67	15
J011020	71	62
J011022	35	18
J011025	103	1
J011030	177	1-16
J011230	45	5
J011235	177	00
J011235	74	5
J011235	177	200-0
J011265	197	19
J011270	51	15
J011270	53	9
J020820	17	8
J020820	18	1
J020825	29	25
J020830	127	9
J021020	64	8
J021025	3	4
J021025	21	9
J021025	27	6
J021025	143	36
J021030	15	2
J021030	18	3
J021030	19	1
J021030	21	6
J021030	27	4
J021030	137	1
J021030	138	0A
J021030	138	1B
J021030	141	1
J021030	141	5
J021030	141	8
J021030	143	11
J021030	143	18
J021030	143	22
J021030	143	31
J021030	147	1
J021030	147	23
J021030	149	1A
J021040	67	5
J021040	67	12
J021040	69	5
J031025	141	16
J031030	21	10
J031030	137	4
J031030	139	12
J031030	141	0B
J031030	141	13
J031030	143	2
J031030	143	4B
J031030	143	5
J031030	143	12
J031030	144	2
J051025	117	7
J219167	103	7
J222010	100	7
J222014	169	5-3
J222016	169	6-3
J222016	9	7
J222016	100	4
J222018	5	9
J222018	35	36
J222022	37	300-1
J241040	159	0
J257218	3	12
J257218	35	35
J257218	195	15
J257218	201	39
J257222	3	51
J257222	195	43
J257227	182	2
J260616	131	27
J260620	127	16
J260620	160	5
J260620	161	16
J260625	159	30
J260625	161	17
J260635	141	0G
J260635	143	4E
J260816	131	12
J260816	133	102
J260816	135	47
J260820	106	20
J260820	113	22
J260820	125	3
J260820	153	22
J260825	159	19
J260825	162	3

PART NUMBER INDEX

Part No.	Page No.	Item
J260830	8	7
J260835	159	21
J260835	161	14
J260855	149	0L
J260614	111	33
J271016	13	5
J271016	25	5
J271020	61	44
J271020	125	15
J271020	129	8
J271020	131	36
J271020	135	51
J271020	159	18
J271020	159	26
J271020	164	13
J271025	182	7
J271025	20	1
J271025	43	18
J271025	65	8
J271025	103	16B
J271025	106	10
J271025	106	26
J271025	106	27
J271025	125	2
J271025	127	28
J271025	131	9
J271025	149	0B
J271025	149	0M
J271025	153	1
J271025	153	18
J271025	153	38
J271030	31	29
J271030	35	23
J271030	101	13
J271030	116	8
J271030	121	12
J271035	5	23
J271035	35	10
J271035	109	29
J271035	159	33
J271050	109	22
J271055	5	22
J271090	43	13
J271260	5	24
J281025	149	0E
J281025	163	10
J281030	13	13
J281030	101	12
J281035	51	25
J281035	139	9
J450510	25	3
J460310	135	55
J460510	123	1
J460510	135	41
J460514	153	4
J460614	133	105
J460616	106	30
J460616	120	02
J460616	135	21
J460616	153	26
J460616	153	35
J460616	163	1
J460616	163	5
J460616	163	13
J460620	135	12
J460620	135	30
J460620	135	61
J460635	119	28
J680616	119	1
J680616	119	5
J680616	119	9
J680616	119	12
J680616	119	16
J680616	119	20
J75481	202	4
J75481	183	05
J75481	201	23
J75481	244	4
J75482	199	6
J75482	244	5
J780616	35	13
J780820	6	3B
J780880	55	31
J781030	45	11
J780612	111	41
J781030	111	10
J781030	46	2
J781030	47	3
J781030	49	2
J781030	75	4
J781035	55	0
J781035	100	5
J781035	109	13
J781225	41	9
J781230	46	6
J781230	51	9
J781240	43	6
J781280	53	4
J900616	99	2
J900625	161	17A
J900635	35	2
J900806	159	32
J900816	127	11
J900820	113	22A
J900820	125	3A
J900830	8	7A
J900830	77	60
J900835	33	1
J901004	31	3
J901004	55	5
J901010	31	4
J901016	13	5A
J901016	37	19
J901016	135	33
J901020	25	12
J901020	61	44A
J901020	125	15A
J901030	13	13A
J901030	100	6
J901030	135	66D
J901035	145	12
J901050	109	22A
J901220	77	200-1
J901225	179	12
J901265	171	20
J901265	197	19A
J900614	111	33A
J901270	45	1
J901425	195	24
J901435	169	5-2
J901435	177	100-1
J901495	234	11
J901495	235	11
J901495	236	11
J901495	237	11
J901640	169	6-4
J901640	190	2
J901645	23	3
J901645	77	35
J921235	149	0Q
J921635	9	4
J921640	9	0
J921645	85	5
J921650	85	6
J921806	5	8
J921840	195	14
J921840	201	38
J921845	3	11
J921850	35	34
J921850	195	40
J922245	3	52
J922245	195	41
J922270	37	300-0
J922706	3	31
J931640	179	24
J932060	179	08
J932255	172	01
J932255	173	10
J932780	234	5
J932780	235	5
J950010	22	3
J950010	127	4
J950010	131	2
J950010	137	10
J950010	147	14
J950010	149	0O
J950010	151	6
J950014	113	3

PART NUMBER INDEX

Part No.	Page No.	Item
J950018	5	10
J950020	195	9
J950020	201	20
J950022	201	42
J951020	173	7
J951027	234	6
J951027	235	6
J952010	103	16AD
J952012	113	9
M340613	77	77
M340616	77	72
M340650	87	621
M340816	77	65
M340816	105	2
M340820	79	63
M341030	77	18
M341060	6	5
M341228	37	53
M341232	89	702B
M341245	79	49
M341885	179	52
M342050	37	21
M342056	181	41
M360614	16	5
M360614	162	1
M430416	131	6
M430660	135	26
M430825	147	25
M492564	179	55
M492564	37	109
M492564	81	76
M500605	7	4
M500605	33	19
M500807	33	0B
M500807	77	61
M521008	22	21
M521008	121	9
M660016	100	8
TA00680	145	--
TA00914	201	0A
TA01033	165	0
TA01679	35	0
TB00689	41	5
TB00840	177	1-1
TB00841	177	1-0
TB00842	177	01
TB00842	177	200-1
TB01052	113	--
TB01052	246	6
TB01079	113	8
TB01080	113	7
TB01097	125	--
TB01474	103	--
TB01475	201	--
TB01477	243	1
TB01740	201	--
TB03701	135	7
TB03702	133	107
TB03740	133	--
TB03796	131	42
TC00463	83	--
TC00463	77	17
TC00463/1	83	1
TC00463/10	83	10
TC00463/11	83	11
TC00463/12	83	12
TC00463/13	83	13
TC00463/14	83	14
TC00463/15	83	15
TC00463/16	83	16
TC00463/17	83	--
TC00463/2	83	2
TC00463/3	83	3
TC00463/4	83	4
TC00463/5	83	5
TC00463/6	83	6
TC00463/7	83	7
TC00463/8	83	8
TC00463/9	83	9
TC00943	41	6
TC01099	177	1-13
TC01576	211	--
TC01576/1	211	1
TC01576/10	211	10
TC01576/11	211	11
TC01576/12	211	12
TC01576/13	211	13
TC01576/14	211	14
TC01576/15	211	15
TC01576/16	211	16
TC01576/17	211	17
TC01576/18	211	18
TC01576/19	211	19
TC01576/2	211	2
TC01576/20	211	20
TC01576/21	211	21
TC01576/22	211	22
TC01576/23	211	23
TC01576/24	211	24
TC01576/25	211	25
TC01576/26	211	26
TC01576/27	211	27
TC01576/28	211	28
TC01576/29	211	29
TC01576/3	211	3
TC01576/30	211	30
TC01576/31	211	31
TC01576/32	211	32
TC01576/33	211	33
TC01576/34	211	34
TC01576/35	211	35
TC01576/36	211	36
TC01576/4	211	4
TC01576/5	211	5
TC01576/6	211	6
TC01576/7	211	7
TC01576/8	211	8
TC01576/9	211	9
TC01577	217	--
TC01577	217	--
TC01577/1	217	1
TC01577/10	217	10
TC01577/11	217	11
TC01577/12	217	12
TC01577/13	217	13
TC01577/14	217	14
TC01577/15	217	15
TC01577/16	217	16
TC01577/17	217	17
TC01577/18	217	18
TC01577/19	217	19
TC01577/2	217	2
TC01577/20	217	20
TC01577/21	217	21
TC01577/22	217	22
TC01577/23	217	23
TC01577/24	217	24
TC01577/25	217	25
TC01577/26	217	26
TC01577/27	217	27
TC01577/28	217	28
TC01577/29	217	29
TC01577/3	217	3
TC01577/30	217	30
TC01577/31	217	31
TC01577/32	217	32
TC01577/33	217	33
TC01577/34	217	34
TC01577/35	217	35
TC01577/36	217	36
TC01577/4	217	4
TC01577/5	217	5
TC01577/6	217	6
TC01577/7	217	7
TC01577/8	217	8
TC01577/9	217	9
TC01578	225	--
TC01578/1	225	1
TC01578/10	225	10
TC01578/11	225	11
TC01578/12	225	12
TC01578/13	225	13
TC01578/14	225	14
TC01578/15	225	15
TC01578/16	225	16
TC01578/17	225	17
TC01578/18	225	18
TC01578/19	225	19

PART NUMBER INDEX

Part No.	Page No.	Item
TC01578/2	225	2
TC01578/20	225	20
TC01578/21	225	21
TC01578/22	225	22
TC01578/23	225	23
TC01578/24	225	24
TC01578/25	225	25
TC01578/26	225	26
TC01578/27	225	27
TC01578/28	225	28
TC01578/29	225	29
TC01578/3	225	3
TC01578/30	225	30
TC01578/31	225	31
TC01578/32	225	32
TC01578/33	225	33
TC01578/34	225	34
TC01578/35	225	35
TC01578/36	225	36
TC01578/37	225	37
TC01578/38	225	38
TC01578/39	225	39
TC01578/4	225	4
TC01578/40	225	40
TC01578/41	225	41
TC01578/5	225	5
TC01578/6	225	6
TC01578/7	225	7
TC01578/8	225	,8
TC01578/9	225	9
TC01579	231	--
TC01579/1	231	1
TC01579/10	231	10
TC01579/11	231	11
TC01579/12	231	12
TC01579/13	231	13
TC01579/14	231	14
TC01579/15	231	15
TC01579/16	231	16
TC01579/17	231	17
TC01579/18	231	18
TC01579/19	231	19
TC01579/2	231	2
TC01579/20	231	20
TC01579/21	231	21
TC01579/22	231	22
TC01579/23	231	23
TC01579/24	231	24
TC01579/25	231	25
TC01579/26	231	26
TC01579/27	231	27
TC01579/28	231	28
TC01579/29	231	29
TC01579/3	231	3
TC01579/30	231	30
TC01579/31	231	31
TC01579/32	231	32
TC01579/33	231	33
TC01579/34	231	34
TC01579/35	231	35
TC01579/36	231	36
TC01579/37	231	37
TC01579/4	231	4
TC01579/5	231	5
TC01579/6	231	6
TC01579/7	231	7
TC01579/8	231	8
TC01579/9	231	9
TC01586	177	100
TC01660	145	7
TC01661	145	6
TC01668	129	--
TC01749	201	0
TC01850	169	11
TC01850	185	0-10
TC01850/1	185	0
TC01850/15	185	101
TC01850/2	185	1
TC01850/3	185	3
TC01850/4	185	4
TC01850/5	185	6
TC01850/6	185	7
TC01850/8	185	5
TC01850/9	185	103
TC01852/16	185	102
TC01852/7	185	8
TC01878	187	--
TC01878	169	3
TC01878/10	187	10
TC01878/11	187	11
TC01878/12	187	12
TC01878/2	187	2
TC01878/3	187	3
TC01878/4	187	4
TC01878/5	187	5
TC01878/6	187	6
TC01878/7	187	7
TC01878/8	187	8
TC01878/9	187	9
TC01879	189	--
TC01879	169	9
TC01879/10	189	10
TC01879/11	189	11
TC01879/12	189	12
TC01879/2	189	2
TC01879/3	189	3
TC01879/4	189	4
TC01879/5	189	5
TC01879/6	189	6
TC01879/7	189	7
TC01879/8	189	8
TC01879/9	189	9
TC01880	169	8
TC01880	191	--
TC01880/1	191	0D
TC01880/10	191	1
TC01880/11	191	2
TC01880/12	191	3
TC01880/2	191	0B
TC01880/3	191	0H
TC01880/4	191	0A
TC01880/5	191	0C
TC01880/6	191	0I
TC01880/7	191	0F
TC01880/8	191	0G
TC01880/9	191	0E
TC02001	129	7
TC02090	202	0
TC21093	243	2
TC21094	243	26
TD01304	17	1
TD01650	145	4
TD02228	127	1
TD02687	202	2
TD02687	201	0E
TD02707	35	4A
TD02747	35	4
TD03093	195	0A
TD03093	201	0B
TD03094	202	1
TD03162	25	9
TD03970	109	--
TD03970	246	5
TD04936	207	--
TD04936/1	207	01
TD04936/10	207	10
TD04936/11	207	11
TD04936/12	207	12
TD04936/13	207	13
TD04936/14	207	14
TD04936/15	207	15
TD04936/16	207	16
TD04936/17	207	17
TD04936/18	207	18
TD04936/19	207	19
TD04936/2	207	2
TD04936/20	207	20
TD04936/21	207	21
TD04936/22	207	22
TD04936/23	207	23
TD04936/24	207	24
TD04936/25	207	25
TD04936/26	207	26
TD04936/27	207	27
TD04936/28	207	28
TD04936/29	207	29
TD04936/3	207	3
TD04936/30	207	30

PART NUMBER INDEX

Part No.	Page No.	Item
TD04936/31	207	31
TD04936/32	207	32
TD04936/33	207	33
TD04936/34	207	34
TD04936/35	207	35
TD04936/36	207	36
TD04936/37	207	37
TD04936/38	207	38
TD04936/39	207	39
TD04936/4	207	4
TD04936/40	207	40
TD04936/41	207	41
TD04936/42	207	42
TD04936/43	207	43
TD04936/44	207	44
TD04936/45	207	45
TD04936/46	207	46
TD04936/47	207	47
TD04936/48	207	48
TD04936/49	207	49
TD04936/5	207	5
TD04936/50	207	50
TD04936/51	207	51
TD04936/52	207	52
TD04936/53	207	53
TD04936/6	207	6
TD04936/7	207	7
TD04936/8	207	8
TD04936/9	207	9
TD04937	213	--
TD04937/1	213	01
TD04937/10	213	10
TD04937/11	213	11
TD04937/12	213	12
TD04937/13	213	13
TD04937/14	213	14
TD04937/15	213	15
TD04937/16	213	16
TD04937/17	213	17
TD04937/18	213	18
TD04937/19	213	19
TD04937/2	213	2
TD04937/20	213	20
TD04937/21	213	21
TD04937/22	213	22
TD04937/23	213	23
TD04937/24	213	24
TD04937/25	213	25
TD04937/26	213	26
TD04937/27	213	27
TD04937/28	213	28
TD04937/29	213	29
TD04937/3	213	3
TD04937/30	213	30
TD04937/31	213	31
TD04937/32	213	32
TD04937/33	213	33
TD04937/34	213	34
TD04937/35	213	35
TD04937/36	213	36
TD04937/37	213	37
TD04937/38	213	38
TD04937/39	213	39
TD04937/4	213	4
TD04937/40	213	40
TD04937/41	213	41
TD04937/42	213	42
TD04937/43	213	43
TD04937/44	213	44
TD04937/45	213	45
TD04937/46	213	46
TD04937/47	213	47
TD04937/48	213	48
TD04937/49	213	49
TD04937/5	213	5
TD04937/50	213	50
TD04937/51	213	51
TD04937/52	213	52
TD04937/53	213	53
TD04937/6	213	6
TD04937/7	213	7
TD04937/8	213	8
TD04937/9	213	9
TD04938	219	--
TD04938/1	219	01
TD04938/10	219	10
TD04938/11	219	11
TD04938/12	219	12
TD04938/13	219	13
TD04938/14	219	14
TD04938/15	219	15
TD04938/16	219	16
TD04938/17	219	17
TD04938/18	219	18
TD04938/19	219	19
TD04938/2	219	2
TD04938/20	219	20
TD04938/21	219	21
TD04938/22	219	22
TD04938/23	219	23
TD04938/24	219	24
TD04938/25	219	25
TD04938/26	219	26
TD04938/27	219	27
TD04938/28	219	28
TD04938/29	219	29
TD04938/3	219	3
TD04938/30	219	30
TD04938/31	219	31
TD04938/32	219	32
TD04938/33	219	33
TD04938/34	219	34
TD04938/35	219	35
TD04938/36	219	36
TD04938/37	219	37
TD04938/38	219	38
TD04938/39	219	39
TD04938/4	219	4
TD04938/40	219	40
TD04938/41	219	41
TD04938/42	219	42
TD04938/43	219	43
TD04938/44	221	44
TD04938/45	221	45
TD04938/46	221	46
TD04938/47	221	47
TD04938/48	221	48
TD04938/49	221	49
TD04938/5	219	5
TD04938/50	221	50
TD04938/51	221	51
TD04938/52	221	52
TD04938/53	221	53
TD04938/54	221	54
TD04938/55	221	55
TD04938/56	221	56
TD04938/57	221	57
TD04938/58	221	58
TD04938/59	221	59
TD04938/6	219	6
TD04938/60	221	60
TD04938/7	219	7
TD04938/8	219	8
TD04938/9	219	9
TD04939	227	--
TD04939/1	227	01
TD04939/10	227	10
TD04939/11	227	11
TD04939/12	227	12
TD04939/13	227	13
TD04939/14	227	14
TD04939/15	227	15
TD04939/16	227	16
TD04939/17	227	17
TD04939/18	227	18
TD04939/19	227	19
TD04939/2	227	2
TD04939/20	227	20
TD04939/21	227	21
TD04939/22	227	22
TD04939/23	227	23
TD04939/24	227	24
TD04939/25	227	25
TD04939/26	227	26
TD04939/27	227	27
TD04939/28	227	28
TD04939/29	227	29
TD04939/3	227	3

PART NUMBER INDEX

Part No.	Page No.	Item
TD04939/30	227	30
TD04939/31	227	31
TD04939/32	227	32
TD04939/33	227	33
TD04939/34	227	34
TD04939/35	227	35
TD04939/36	227	36
TD04939/37	227	37
TD04939/38	227	38
TD04939/39	227	39
TD04939/4	227	4
TD04939/40	227	40
TD04939/41	227	41
TD04939/42	227	42
TD04939/43	227	43
TD04939/44	227	44
TD04939/45	227	45
TD04939/46	227	46
TD04939/47	227	47
TD04939/48	227	48
TD04939/49	227	49
TD04939/5	227	5
TD04939/50	227	50
TD04939/51	227	51
TD04939/52	227	52
TD04939/53	227	53
TD04939/54	227	54
TD04939/6	227	6
TD04939/7	227	7
TD04939/8	227	8
TD04939/9	227	9
TD05303	234	1
TD05304	234	--
TD05365	199	--
TD05368	235	1
TD05369	235	--
TD05377	236	--
TD05378	236	1
TD05566	237	1
TD05567	237	--
TD05702	113	4
TD05779	243	24
TD06516	172	03
TD06544	33	0
TD08344	135	16
TD08378	123	4
TD08381	201	59
TD08381	202	--
TD08420	135	18
TD09464	243	17
TD09573	243	23
TD10020	121	1
TD10020	129	6
TD20482	135	66A
TD20681	246	2
TD21638	135	6
TD21659	135	8
TD30001	201	0F
TE00188	25	7
TE00237	121	4
TE01456	241	24
TE01825	41	1
TE03012	133	108
TE03013	133	109
TE03072	99	4
TE03441	129	4
TE03584	234	16
TE03584	235	16
TE03584	236	16
TE03584	237	16
TE03800	43	26
TE04386	35	4B
TE04408	35	4C
TE04412	234	15
TE04412	235	15
TE04412	236	15
TE04412	237	15
TE04647	121	3
TE04648	121	2
TE04663	201	22
TE04684	171	24
TE04688	3	48
TE05236	49	16
TE05241	49	11
TE05299	145	14
TE06186	244	8
TE06422	234	1A
TE06422	235	1A
TE06422	236	1A
TE06422	237	1A
TE06423	234	14
TE06423	235	14
TE06423	236	14
TE06423	237	14
TE06726	145	13
TE06804	127	27
TE06805	127	21
TE06853	135	66
TE07082	207	54
TE07082	213	54
TE07083	221	61
TE07084	227	55
TE07177	234	1D
TE07177	235	1D
TE07177	236	1D
TE07177	237	1D
TE07217	243	--
TE07230	100	--
TE07230	101	--
TE07232	107	--
TE07232	246	0
TE07247	211	--
TE07248	225	--
TE07249	231	--
TE07271	105	--
TE07272	246	--
TE07274	244	--
TE07275	17	--
TE07276	99	--
TE07282	241	--
TE07678	121	--
TE07678	246	38
TE07715	246	--
TE07716	246	2
TE08592	103	16A
TE08593	103	16
TE08865	129	11
TE09089	101	15
TE09239	135	17
TE09240	123	--
TE09240	246	41
TE09526	165	--
TE09535	169	--
TE09956	153	--
TE10084	119	40
TE10106	246	39
TE10106	246	--
TE10107	246	1
TE10108	246	3
TE10196	119	22
TE10438	169	5-1
TE10687	135	15
TE24373	135	9
W351225	186	4
YA00016055	35	1
YA00017356	133	104
YA00017558	20	0
YA00020678	175	4
Z425175	3	54
Z924327	241	2
Z934574	241	11
Z936010	241	22
Z947309	241	30
Z947310	241	32
Z957366	59	29A
Z957366	59	30A
Z957366	171	25
Z957366	35	5
Z957366	35	39A
Z957366	35	41A
Z957366	35	42A
Z957366	35	44A
Z957366	51	22A
Z957366	53	14A
Z957366	56	6A
Z957366	56	7A
Z957366	56	11A
Z957366	56	12A

PART NUMBER INDEX

Part No.	Page No.	Item	Part No.	Page No.	Item	Part No.	Page No.	Item
Z957366	57	0A						
Z957366	57	1A						
Z957366	57	5A						
Z957366	59	6A						
Z957366	59	7A						
Z957366	59	22A						
Z957366	59	23A						
Z957366	63	50A						
Z957366	63	66A						
Z957366	64	0A						
Z957366	65	18A						
Z957366	67	19A						
Z957366	69	11A						
Z957366	71	1A						
Z957366	71	13A						
Z957366	71	39A						
Z957366	71	44A						
Z957366	71	50A						
Z957366	71	56A						
Z957366	71	57A						
Z957366	171	11A						
Z957366	244	7						
Z958393	241	18						
Z958394	241	19						
Z958407	241	10						
Z959499	37	102						
Z962453	46	0						
Z962453	49	0						
Z962453	75	2						
Z966993	43	5						
Z966993	46	1						
Z966993	49	1						
Z966993	75	3						
Z966993	244	2						
Z971489	45	10						
Z971489	47	1						
Z972658	177	1-9						
Z975366	73	0A						
Z984054	77	20						
Z985706	241	23						
Z985710	241	17						
Z986910	45	9						
Z986910	47	0						
Z989850	241	15						
Z989852	241	3						
Z989853	241	35						
Z989858	241	7						
Z989859	241	8						
Z989860	241	9						
Z989861	241	4						
Z991345	77	29						
Z991349	177	1-11						
Z991718	35	30						
Z991718	51	1						
Z991733	77	14						